VILLAGE OF PALMETTO BAY

Mayor Karyn Cunningham
Vice Mayor Mark Merwitzer
Council Member Patrick Fiore (Seat 1)
Council Member Steve Cody (Seat 2)
Council Member Marsha Matson (Seat 3)

Village Manager Nick Marano
Village Attorney John Quick
Village Clerk Missy Arocha

In accordance with the Americans with Disabilities Act of 1990, persons needing special accommodation, a sign language interpreter, or hearing impaired to participate in this proceeding should contact the Village Clerk at (305) 259-1234 for assistance no later than four days prior to the meeting.

AGENDA
REGULAR COUNCIL MEETING
MONDAY, MARCH 2, 2026 – 7:00 PM
(PROCLAMATIONS, AWARDS, & PRESENTATIONS WILL BEGIN AT 6:30 PM)

VILLAGE HALL MUNICIPAL CENTER
9705 EAST HIBISCUS STREET, PALMETTO BAY, FL 33157
(305) 259-1234

---

1. **CALL TO ORDER, ROLL CALL, INVOCATION, PLEDGE OF ALLEGIANCE, AND DECORUM STATEMENT, IN THAT ORDER:** Any person making impertinent or slanderous remarks, or who becomes boisterous, while addressing the Council may be barred from further appearance before the Council by the Mayor, unless permission to continue or again address the Council is granted by a majority vote of the Council. Applauding speakers shall be discouraged. Heckling or verbal outbursts in support or opposition to a speaker, or his or her remarks, shall be prohibited. No signs or placards shall be allowed in the Council meeting. Persons exiting the Council meeting shall do so quietly. All cellular telephones and beepers are to be silenced during the meeting.

2. **PROCLAMATIONS, AWARDS, PRESENTATIONS**

   A. Recognition of Sharon Shelley (volunteerism for her service on the Education Advisory Committee)

   B. Recognition of Teachers of the Year (TOY)

   C. Recognition of Rookie Teacher of the Year (RTOY)

3. APPROVAL OF MINUTES

A. Regular Council Meeting (February 2, 2026)

4. REQUESTS, PETITIONS AND PUBLIC COMMENTS SUBMITTED Individuals wishing to speak on matters on the agenda and on items pertinent to the Village may do so by speaking during this section of the agenda. The Mayor will recognize those persons who wish to speak. Each speaker must sign-in prior to speaking on the designated public commentary sign-in sheet. Items for public hearing provided for within the agenda shall not be a topic of discussion during this section of the agenda. Please limit your comments to three (3) minutes or less. Public comments made by members of the public are important to the Village Council. Speakers will address the Village Council with respect.

5. VILLAGE MANAGER'S REPORT

A. Presentation of Miami-Dade Fire Service Delivery Report 2025 (Office of the Fire Chief, Raied S. Jadallah)

B. Departmental Updates

C. Lobbyist Legislative Update

D. Police Commander Report

6. VILLAGE ATTORNEY'S REPORT

A. Attorney Expenses

B. Litigation Update

7. VILLAGE CLERK'S REPORT

A. Calendar: March 2026

B. Member Solicitation: Education Advisory Committee

C. Member Solicitation: Parks & Recreation Committee

8. BOARD AND COMMITTEE REPORTS

A. Charter Revision Commission Meeting (December 16, 2025)

B. Education Advisory Committee (December 2, 2025)

C. Parks & Recreation Committee Meeting (September 4, 2025)

D. Youth Community Involvement Task Force (November 21, 2025)

9. EMERGENCY ORDINANCES WITH PUBLIC HEARING

10. ORDINANCES FOR SECOND READING AND PUBLIC HEARING

11. ORDINANCES FOR FIRST READING WITH PUBLIC COMMENTS

A. AN ORDINANCE OF THE MAYOR AND VILLAGE COUNCIL OF THE VILLAGE OF PALMETTO BAY, FLORIDA, REGARDING COUNCIL COMMITTEES; AMENDING THE CODE OF ORDINANCES OF THE VILLAGE OF PALMETTO BAY AT SECTION 2-46, "COMMITTEES," TO REVISE AND AMEND PROVISIONS RELATING TO THE ESTABLISHMENT, COMPOSITION, DUTIES, AND PROCEDURES OF COUNCIL COMMITTEES; PROVIDING FOR CODIFICATION; SEVERABILITY; AND AN EFFECTIVE DATE. *(Sponsored by Councilmember Marsha Matson and Co-Sponsored by Village Clerk Missy Arocha)*

12. CONSENT AGENDA

A. A RESOLUTION OF THE MAYOR AND VILLAGE COUNCIL OF THE VILLAGE OF PALMETTO BAY, FLORIDA, RATIFYING RESOLUTION NO. 2015-31, APPROVING THE VILLAGE OF PALMETTO BAY TITLE VI NON-DISCRIMINATION POLICY AND PLAN FOR THE PURPOSE OF ENSURING COMPLIANCE WITH TITLE VI OF THE CIVIL RIGHTS ACT OF 1964; AND PROVIDING FOR AN EFFECTIVE DATE.*(Sponsored by Administration and Prepared by Grants Administrator, Christina Cotto, and Public Services Director, Dionisio Torres)*

B. A RESOLUTION OF THE MAYOR AND VILLAGE COUNCIL OF THE VILLAGE OF PALMETTO BAY, FLORIDA, REGARDING PARKS AND RECREATION; AUTHORIZING THE USE OF THALATTA ESTATE AT NO COST, TO CHABAD OF PALMETTO BAY AND DEERING BAY, INC. ON MARCH 3, 2026, FOR THE PURPOSE OF HOSTING A HOLIDAY OF PURIM EVENT; AND PROVIDING AN EFFECTIVE DATE. *(Sponsored by Administration and Prepared by Parks & Recreation Director, Fanny Carmona)*

C. A RESOLUTION OF THE MAYOR AND VILLAGE COUNCIL OF THE VILLAGE OF PALMETTO BAY, FLORIDA, REGARDING PARKS AND RECREATION; AUTHORIZING THE USE OF THALATTA ESTATE AT NO COST, TO CHABAD OF PALMETTO BAY AND DEERING BAY, INC. ON MARCH 29, 2026, FOR THE PURPOSE OF HOSTING A COMMUNITY GET-TOGETHER EVENT; AND PROVIDING AN EFFECTIVE DATE. *(Sponsored by Administration and Prepared by Parks & Recreation Director, Fanny Carmona)*

D. A RESOLUTION OF THE MAYOR AND VILLAGE COUNCIL OF THE VILLAGE OF PALMETTO BAY, ESTABLISHING AN AUDITOR SELECTION COMMITTEE PER SECTION 218.391 FLORIDA STATUTES, FOR THE PURPOSE OF ASSISTING THE VILLAGE COUNCIL IN SELECTING AN AUDITOR TO CONDUCT THE ANNUAL FINANCIAL AUDIT REQUIRED IN SECTION 218.39, FLORIDA STATUTES; AND PROVIDING FOR AN EFFECTIVE DATE. *(Sponsored by Administration and prepared by Finance Director, Desmond Chin)*

E. A RESOLUTION OF THE MAYOR AND VILLAGE COUNCIL OF THE VILLAGE OF PALMETTO BAY, FLORIDA, RELATED TO PROCUREMENT; APPROVING THE SELECTION OF PHOENIX CONCRETE PLUS, INC. TO REPLACE DESIGNATED AREAS OF ASPHALT WALKWAYS/TRAILS WITHIN PALMETTO BAY PARK AND

CORAL REEF PARK, PURSUANT TO INVITATION TO BID (ITB) NO. 2025-12-010; AUTHORIZING THE VILLAGE MANAGER TO NEGOTIATE AND ENTER INTO A CONTRACT AND ISSUE A PURCHASE ORDER IN THE AMOUNT OF ONE HUNDRED TWENTY-FOUR THOUSAND SIX HUNDRED TWENTY-FOUR DOLLARS AND THIRTY-EIGHT CENTS ($124,624.38); AND PROVIDING FOR AN EFFECTIVE DATE. *(Sponsored by Administration and Prepared by Procurement Specialist, Alessia Bencomo)*

F. A RESOLUTION OF THE MAYOR AND VILLAGE COUNCIL OF THE VILLAGE OF PALMETTO BAY, FLORIDA, RELATED TO PROCUREMENT; APPROVING THE SELECTION OF HEADLEY CONSTRUCTION GROUP, INC. TO CONSTRUCT BIKE LANES IMPROVEMENTS ON SW 82ND, PURSUANT TO INVITATION TO BID (ITB) NO. 2026-11-002; AUTHORIZING THE VILLAGE MANAGER TO NEGOTIATE AND ENTER INTO A CONTRACT AND ISSUE A PURCHASE ORDER IN THE AMOUNT OF TWO HUNDRED NINETY-TWO THOUSAND NINE HUNDRED FIVE DOLLARS AND ZERO CENTS ($292,905.00); AND PROVIDING FOR AN EFFECTIVE DATE. *(Sponsored by Administration and Prepared by Procurement Specialist, Alessia Bencomo)*

G. A RESOLUTION OF THE MAYOR AND VILLAGE COUNCIL OF THE VILLAGE OF PALMETTO BAY, FLORIDA, REGARDING THE PROCUREMENT OF BUS STOP AMENITIES AND MONUMENT ENTRANCE SIGNS AS PART OF THE VILLAGE-WIDE BRANDING IMPLEMENTATION; AUTHORIZING THE VILLAGE MANAGER TO ENTER INTO A CONTRACT WITH REP SERVICES, INC., PIGGY-BACKING OFF A CLAY COUNTY, FLORIDA CONTRACT, FOR THE PURCHASE OF BUS STOP AMENITIES; AUTHORIZING THE VILLAGE MANAGER TO ENTER INTO A CONTRACT AND INSTALLATION AGREEMENT WITH GARDNER SIGNS, LLC (D/B/A FERRIN SIGNS), FOR THE FABRICATION, PERMITTING, AND INSTALLATION OF TWO (2) MONUMENT ENTRANCE SIGNS; AUTHORIZING TOTAL EXPENDITURES IN AN AMOUNT NOT TO EXCEED ONE HUNDRED SEVENTEEN THOUSAND, EIGHT HUNDRED THIRTY-FOUR DOLLARS AND SIXTY CENTS ($117,834.60) PLUS APPLICABLE PERMIT COSTS; AND PROVIDING AN EFFECTIVE DATE. *(Sponsored by Administration and Prepared by Parks & Recreation Director, Fanny Carmona and Planning & Zoning Director, Javier Gonzalez)*

13. RESOLUTIONS REQUIRING PUBLIC HEARING

14. RESOLUTIONS WITH PUBLIC COMMENT

A. A RESOLUTION OF THE MAYOR AND VILLAGE COUNCIL OF THE VILLAGE OF PALMETTO BAY, FLORIDA, RELATED TO PROCUREMENT; APPROVING THE SELECTION OF _____ TO MANAGE AND OPERATE A FARMER'S MARKET AT CORAL REEF PARK, PURSUANT TO REQUEST FOR PROPOSAL (RFP) NO. 2026-12-003 AND AUTHORIZING THE VILLAGE MANAGER TO ENTER INTO A CONTRACT FOR SAID SERVICES; AND PROVIDING FOR AN EFFECTIVE DATE. *(Sponsored by Administration and Prepared by Procurement Specialist, Alessia Bencomo)*

B. A RESOLUTION OF THE MAYOR AND VILLAGE COUNCIL OF THE VILLAGE OF

PALMETTO BAY, FLORIDA, RELATING TO PERSONNEL; RATIFYING THE SELECTION OF MAJOR ANTONIO RODRIGUEZ, TO THE POSITION OF VILLAGE COMMANDER FOR THE PALMETTO BAY MUNICIPAL DISTRICT, TO FILL THE CURRENT VACANCY IN ACCORDANCE WITH THE TERMS AND CONDITIONS DELINEATED IN THE VILLAGE'S INTERLOCAL AGREEMENT WITH THE MIAMI-DADE SHERIFF'S OFFICE FOR THE PROVISION OF LOCAL POLICE SERVICES; AND PROVIDING AN EFFECTIVE DATE. *(Sponsored by Administration and prepared by Village Manager, Nick Marano)*

C. A RESOLUTION OF THE MAYOR AND VILLAGE COUNCIL OF THE VILLAGE OF PALMETTO BAY, FLORIDA, AFFIRMING SUPPORT FOR THE PRESERVATION OF THE MIAMI-DADE URBAN DEVELOPMENT BOUNDARY ("UDB") AS IT CURRENTLY EXISTS TO PROTECT DOWNSTREAM WATER RESOURCES, INCLUDING THE BISCAYNE AQUIFER, REGIONAL GROUNDWATER SUPPLIES, AND CONNECTED COASTAL WATERS, AS WELL AS THE EVERGLADES, WETLANDS, AND AGRICULTURAL LANDS; URGING THE MIAMI-DADE COUNTY BOARD OF COUNTY COMMISSIONERS TO UPHOLD COUNTY MAYOR DANIELA LEVINE CAVA'S VETO OF THE PROPOSED DEVELOPMENT OUTSIDE THE UDB; URGING THE FLORIDA STATE LEGISLATURE TO OPPOSE ANY LEGISLATION THAT WOULD WEAKEN THE UDB IN THE MIAMI-DADE COUNTY CHARTER; ENCOURAGING ADVANCEMENT OF ATTAINABLE AND WORKFORCE HOUSING WITHIN THE UDB TO ADDRESS HOUSING AFFORDABILITY WITHOUT EXPANDING DEVELOPMENT INTO ENVIRONMENTALLY SENSITIVE LANDS; DESIGNATING THE PRESERVATION OF THE UDB AS A STATE LEGISLATIVE PRIORITY FOR THE VILLAGE OF PALMETTO BAY; AND FURTHER, DIRECTING THE VILLAGE CLERK TO TRANSMIT A COPY OF THIS RESOLUTION TO THE MIAMI-DADE COUNTY MAYOR, EACH MEMBER OF THE MIAMI-DADE COUNTY BOARD OF COUNTY COMMISSIONERS, THE SPEAKER OF THE FLORIDA HOUSE OF REPRESENTATIVES, THE PRESIDENT OF THE FLORIDA SENATE, THE MIAMI-DADE STATE LEGISLATIVE DELEGATION, ALL OTHER MUNICIPALITIES WITHIN MIAMI-DADE COUNTY, AND THE VILLAGE'S STATE LEGISLATIVE LOBBYISTS. *(Sponsored by Mayor Karyn Cunningham and Co-Sponsored by Vice Mayor Mark Merwitzer)*

D. A RESOLUTION OF THE VILLAGE COUNCIL OF THE VILLAGE OF PALMETTO BAY, FLORIDA, ESTABLISHING THE "CLEAN PAWS PROGRAM," A VOLUNTARY COMMUNITY DOG WASTE BAG DISPENSER PROGRAM; AUTHORIZING THE VILLAGE MANAGER TO IMPLEMENT THE PROGRAM; ALLOCATING FIVE THOUSAND DOLLARS ($5,000.00) FOR THE PURCHASE AND INSTALLATION OF BAG DISPENSERS, REFILL BAGS, AND PROGRAM SIGNAGE; AND PROVIDING FOR AN EFFECTIVE DATE. *(Sponsored Vice Mayor Mark Merwitzer)*

E. A RESOLUTION OF THE MAYOR AND VILLAGE COUNCIL OF THE VILLAGE OF PALMETTO BAY, PROCLAIMING "WIENER FEST" AND PROVIDING ACTIVITIES FOR DOGS AND RESIDENTS AT A SPECIAL EVENT AT PERRINE WAYSIDE DOG PARK; TO INVITE PARTICIPATION OF MIAMI-DADE COUNTY ANIMAL SERVICES FOR PET ADOPTION AND EDUCATIONAL OUTREACH; TO PROMOTE THE VILLAGE'S ADOPT-A-PET INITIATIVE; AND PROVIDING FOR

AN EFFECTIVE DATE. *(Sponsored by Councilmember Marsha Matson)*

15. OTHER BUSINESS

16. COUNCIL COMMENTS

17. NEXT MEETING AND ADJOURNMENT

- REGULAR COUNCIL MEETING (APRIL 6, 2025)

WE, THE VILLAGE COUNCIL OF THE VILLAGE OF PALMETTO BAY, HEREBY COMMIT OURSELVES TO MAINTAINING CIVILITY IN OUR PUBLIC AND POLITICAL DISCOURSE AND PLEDGE TO THE FOLLOWING PRINCIPLES:

- We will respect the right of all citizens in our community to hold different opinions;
- We will avoid rhetoric intended to humiliate or question the wisdom of those whose opinions are different from ours;
- We will strive to understand differing perspectives;
- We will choose our words carefully;
- We will speak truthfully without accusation and we will avoid distortion;
- We will speak out against violence, prejudice, and incivility in all of their forms, whenever and wherever they occur.

NOTICE OF APPEAL RIGHTS

Pursuant to Florida Statutes 286.0105, the Village hereby advises the public that if a person decides to appeal any decision made by the Council with response to any matter considered at its meeting or hearing, he or she will need a record of the proceedings, and that for such purpose, the affected person may need to ensure that verbatim record of the proceedings is made, which record includes testimony and evidence upon which the appeal is to be based. This notice does not constitute consent by the Village for the introduction or admission of otherwise inadmissible or irrelevant evidence, nor does it authorize challenges or appeals not otherwise allowed.

AMERICAN DISABILITIES ACT OF 1990

This meeting is open to the public. In accordance with the American Disabilities Act of 1990, persons needing special accommodation or a sign language interpreter to participate in this proceeding should contact the Village Clerk at (305) 259-1234 no later than four (4) days prior to the meeting. Hearing Assistance Devices are available with the Village Clerk.

AGENDA ITEM NO. 3.A

Item Cover Page

REGULAR COUNCIL AGENDA ITEM REPORT

DATE:	March 2, 2026
SUBMITTED BY:	Missy Arocha, Village Clerk's Office
ITEM TYPE:	Minutes
AGENDA SECTION:	APPROVAL OF MINUTES
SUBJECT:	Regular Council Meeting (February 2, 2026)
SUGGESTED ACTION:	

ATTACHMENTS:
2026-02-02 Regular-Minutes
Exhibit A - Public Comments by Form

MINUTES
REGULAR COUNCIL MEETING
MONDAY, FEBRUARY 2, 2026 – 7:00 PM
VILLAGE HALL MUNICIPAL CENTER
9705 EAST HIBISCUS STREET, PALMETTO BAY, FL 33157

2. PROCLAMATIONS, AWARDS, AND PRESENTATIONS:

The Mayor and Village Council presented the following proclamation at 6:30 p.m.

A. Proclamation in honor of Black History Month

B. Recognition of Sheila Frazier (volunteerism for her service on the Parks & Recreation Committee)

1. CALL TO ORDER, ROLL CALL, INVOCATION, PLEDGE OF ALLEGIANCE, AND DECORUM STATEMENT, IN THAT ORDER.

Mayor Karyn Cunningham called the Regular Council Meeting to order at 7:01 p.m.

The following members of the Village Council were present during the roll call:
Mayor Karyn Cunningham
Vice Mayor Mark Merwitzer
Councilmember Patrick Fiore
Councilmember Steve Cody
Councilmember Marsha Matson

The following Charter Officers were present during the roll call:
Village Manager Nick Marano
Village Attorney John Quick
Village Clerk Missy Arocha

Councilmember Patrick Fiore led the invocation and resident, Steve Kreisher led the pledge of allegiance.

3. APPROVAL OF MINUTES

A. Regular Council Meeting (February 2, 2026)

Councilmember Marsha Matson **motioned** to approve the minutes. Vice Mayor Mark Merwitzer **seconded** the motion. The **minutes passed (4-1)**; Councilmember Steve Cody voted opposed.

Following approval of the minutes, Mayor Karyn Cunningham requested that the Council consider an add-on resolution directing the Village Manager to produce videos in recognition of Women's History Month, in an amount not to exceed $5,000. She explained that she was unable to place the resolution on the agenda by the established deadline.

Councilmember Marsha Matson **motioned** to approve the add-on Resolution. Councilmember Steve Cody **seconded** the motion. **The motion passed (4-1)**; Vice Mayor Mark Merwitzer voted opposed.

Village Attorney John Quick explained that agenda item 14C was withdrawn by the sponsor, Councilmember Marsha Matson.

4. REQUESTS, PETITIONS, AND PUBLIC COMMENTS: The following speakers spoke for a time allotment of three minutes:

- David Singer (8360 SW 154 Terrace) read a statement regarding the outcome of the case between Steve Cody vs. Mark Merwitzer.

- Steve Kreisher (18201 SW 98th Avenue) expressed concern that no tangible solution had been developed in response to last month's request regarding enforcement of the nuisance ordinance related to dog waste. He questioned how the Village intends to enforce the ordinance and stated his opinion that the Mayor's Coalition should oppose related proposed legislation and suggested that the Coalition would be a good starting point for organized resistance.

- Lasaly Changkachith (7740 SW 177th Street), Chair of the Resiliency Committee, reported on the Committee's plastic recycling initiative. She stated that from April of the previous year through December, approximately 750 pounds of plastic had been collected for recycling. As a result of the initiative, the recycling company provided the Village with a bench and further reported that the Committee exceeded 1,000 pounds of recycled plastic, and the bench was installed in the Butterfly Garden.

- James Woodard (address exempt from public record) stated that previous renditions of the site plan reflected a perimeter path and referenced the lease requirements, noting that improvements must comply with the lease terms and expressed concern that the proposed path does not align with the mandates of the lease. He further stated that during the December outreach meeting, east and west paths were discussed, and that the center section of the property is a pristine and valuable habitat. He expressed concern that constructing a path through the center section would destroy native vegetation and wildlife habitat and stated that the present proposal does not comply with the lease requirements.

- Henry Clifford (8875 SW 171st Street) stated that he lives three houses away from the wooded area and has resided there since 1979. He referenced a July 31 deadline related to completion of the path and expressed concern about proceeding in haste beyond what is required by the lease. He stated that constructing a path through the center of the woods could disrupt wildlife, particularly during breeding and nesting periods, and asserted that the lease prohibits such disturbance and

suggested that development should occur in a manner that directs wildlife away from residential areas rather than through the center of the habitat.

Village Clerk Missy Arocha read the public comments submitted by form, attached as “Exhibit A”.

5. VILLAGE MANAGER’S REPORT

A. Departmental Updates: The Manager’s detailed report was part of the agenda packet. During his live report, he illustrated a PowerPoint presentation of all village wide departments and answered questions raised by the Council.

B. Lobbyist Legislative Update: Detailed report was part of the agenda packet.

C. The Police Commander Report was provided and illustrated for the month of January 2026 by Commander Mari Guerra.

Regarding police budget and surplus, Vice Mayor Mark Merwitzer referenced the Village’s historically low crime rate over the past year and inquired whether the Village could produce a community video like one recently created by Pinecrest featuring residents. He also referenced the Manager’s budget report and asked about a reported surplus within the policing unit.

Village Manager Nick Marano stated that approximately $275,000 was reported last month and that, throughout the last quarter, the department operated approximately 10% under budget.

Major Mari Guerra reported that expenditures for the current month were approximately 8% lower than the previous year, primarily due to savings in overtime, special projects, and events and reported that holiday patrol overtime in December 2025 had been reduced with assistance from the Sheriff’s Office, particularly along the U.S.1 corridor.

Vice Mayor Mark Merwitzer confirmed that the savings were primarily from overtime, and Major Guerra affirmed.

Vice Mayor Mark Merwitzer asked for clarification regarding the source and breakdown of the surplus noted in the first-quarter budget report.

Manager Nick Marano explained that approximately 75% of Village expenditure is personnel-related and that surpluses are generally attributable to personnel savings, including vacancies and overtime savings and reported that vacancies are sometimes maintained at the beginning of the fiscal year as a fiscal management strategy and that department leadership closely monitors staffing and expenditures.

Vice Mayor Merwitzer expressed concern about the projected $540,000 deficit in legal fees and asked how the Village is prioritizing budget allocations, particularly when funds from unfilled positions may be redirected to litigation expenses.

Manager Nick Marano explained that the $500,000 legal fee amount is a projection based on prior years and not a fixed obligation and that revenue projections, including sales and utility taxes, are conservative and may improve as the fiscal year progresses. He also explained the need to maintain flexibility, particularly during hurricane season, when overtime expenses could increase significantly and that adjustments are made throughout the fiscal year based on revenues and expenditures.

Vice Mayor Mark Merwitzer requested that staff provide updated projections to assist with upcoming fiscal year planning discussions.

Manager Nick Marano agreed to provide additional information, including totals related to unfilled positions.

Regarding facility staffing, Vice Mayor Mark Merwitzer expressed concern that a staffing plan for the new recreation facility had not presented at the time of construction approval.

Manager Nick Marano responded that a staffing plan existed and that capital expenditures for construction are separated from personnel budget lines and explained that recommendations regarding staffing levels had been made and that the facility would operate effectively within available resources.

Regarding the pedestrian bridge and canal activity, Mayor Karyn Cunningham referenced a video depicting youth with BB guns near the C-100 Canal and pedestrian bridge area and requested additional research.

Major Mari Guerra stated that youth had been observed hunting iguanas, which is legal provided they do not trespass on private property and reported that deputies had made contact and confirmed that carrying BB guns in that context was permitted. Residents were encouraged to contact police if concerns arise.

Regarding the wooded area trail, Councilmember Marsha Matson asked whether the proposed trail alignment within the wooded area had changed, stating she believed it had previously been a perimeter trail.

Manager Nick Marano responded that the current proposal reflects the plan recommended by IRC as environmental experts and stated that the proposed 300-foot trail would meet lease requirements and that a perimeter trail could be added in the future.

Councilmember Patrick Fiore stated that he recently toured the wooded area with a resident and expressed concerns regarding safety and trail placement. He indicated a preference for a perimeter trail and requested a meeting with the Manager and an IRC representative before bringing additional discussion back to Council.

Vice Mayor Merwitzer made a **motion** that if the administration wishes to construct a trail through the wooded area, the matter must return to Council for approval. Councilmember Marsha Matson **seconded** the motion.

Vice Mayor Mark Merwitzer stated that he had met with residents who expressed opposition to a path through the wooded area. He explained that his motion would direct the administration to return to the Council for approval should it wish to proceed with constructing a path through the woods.

Attorney John Quick recommended that the motion be added to the agenda for discussion. Councilmember Marsha Matson **motioned** to move the discussion to the agenda. Councilmember Patrick Fiore **seconded** the motion. The **motion passed (4-1)**; Councilmember Steve Cody voted opposed.

Regarding dog waste enforcement, Councilmember Marsha Matson questioned the enforcement options related to ongoing issues with dog waste in residential areas.

Manager Nick Marano stated that the Village can enforce the applicable County ordinance and intends to do so, including potential installation of signage and reported that the Village could also consider adopting its own Ordinance.

Village Attorney John Quick stated that if the Village adopts its own Ordinance, enforcement will occur through Code Compliance.

Mayor Karyn Cunningham suggested installing bag dispensers and receptacles in public easement areas.

Attorney John Quick clarified that such installations are permitted within public easements or rights-of-way; otherwise, property owner permission would be required and explained that funding for such measures could be budgeted by the Village.

Regarding fee waivers and financial reporting, Councilmember Marsha Matson expressed difficulty understanding the calculation of fee waivers reflected on the agenda. She stated that, after reviewing the spreadsheet, she was unable to determine the true cost of the waivers without manually performing calculations and referenced the Feller Room rental fee of $268 per meeting and noted that estimating multiple Saturday uses from January through May would total approximately $5,000. She reported that other entries appeared significantly higher and requested that fee waivers be reported in a clearer and more accurate format moving forward.

Village Manager Nick Marano acknowledged her concerns and stated he would review the reporting methodology and provide a response at the March meeting.

Councilmember Matson also inquired about reportable checks and legal budget expenditures, specifically referencing ongoing marine-related litigation and recurring invoices from Luxcom, including a recent additional $130,000 expense.

Village Attorney John Quick stated he would review how the charges were reflected on the spreadsheet and follow up with Council at the next meeting.

Regarding the woods area trail discussion (continued), Mayor Karyn Cunningham asked whether preservation efforts in the wooded area were proceeding in

accordance with the previously outlined plan.

Manager Nick Marano confirmed that they were and that if it is the will of the Council to prohibit a path through the woods, Council should formally vote on the matter. He noted that an additional related agenda item was forthcoming.

Vice Mayor Mark Merwitzer made a **motion** to prohibit construction of a path through the woods. Councilmember Marsha Matson **seconded** the motion.

Mayor Karyn Cunningham questioned whether prohibiting the path would result in cost savings.

Manager Nick Marano stated that not constructing a path through the wooded center would be less expensive and that he would identify funding for a perimeter trail alternative.

Mayor Karyn Cunningham reported that the matter had been discussed at length at several meetings and spoke in opposition to delaying the project.

Councilmember Marsha Matson stated that she recalled prior discussions of a perimeter path and reiterated her opposition to a path through the center of the woods.

Vice Mayor Mark Merwitzer stated that he had spoken directly with residents who contacted him and emphasized the importance of continued discussion given the significance of the issue. He added that potential liability costs from injuries could exceed construction costs and noted that many residents' concerns were ecological in nature rather than opposition to a trail generally.

Vice Mayor Mark Merwitzer **amended his motion** to prohibit a path through the wooded area unless it is located within a clear-cut area. Councilmember Matson **seconded the amended motion**. **The motion passed (3–2)**; with Mayor Karyn Cunningham and Councilmember Steve Cody voted opposed.

6. VILLAGE ATORNEY'S REPORT

A. Village Attorney John Quick explained that the legal invoices are made part of the agenda packet and that he had previously answered questions raised by the Council.

B. Village Attorney John Quick provided a litigation update.

7. VILLAGE CLERK'S REPORT

A. Village Clerk Missy Arocha provided a calendar update for February 2026.
B. Announced the existing member vacancies on the Education Advisory Committee and Parks & Recreation Committee.

8. BOARD AND COMMITTEE REPORTS

Councilmember Steve Cody **motioned** to approve the Board and Committee Reports. Councilmember Marsha Matson **seconded** the motion. **All voted in favor (5-0). The motion carried unanimously.**

A. Art-in-Public Places Advisory Board Meeting (October 8, 2025)

Education Advisory Committee (EAC)

EAC Chair, Jorge Pulido invited the community to attend the upcoming Black History Month event scheduled for February 24, 2026. He also provided an update on the Schools of Hope discussion from the recent joint meeting of the Palmetto Bay and Pinecrest Education Advisory Committees.

Chair Pulido requested Council support for the Miami-Dade County Public Schools (MDCPS) positions and urged advocacy during the State's consideration of proposed amendments. He reported that a hearing would take place on February 20 and encouraged participation either virtually or in person and referenced the legislative slate and emphasized the importance of maintaining local control. He further requested that the Council consider adopting a motion reaffirming support for the MDCPS recommendations presented in December and encouraging the community to advocate for local schools.

Agenda Scheduling

Councilmember Patrick Fiore stated he would be out of town on February 23 and requested that the public hearing items scheduled for the February 23, 2026, Zoning Hearing be placed on the March agenda.

Village Attorney John Quick advised that rescheduling to March would be appropriate, noting that advertising requirements could make advancing the item difficult and that moving it back two weeks was reasonable. He confirmed that the March 16, Zoning meeting would be sufficient.

Vice Mayor Mark Merwitzer questioned whether a separate meeting would be required.

Attorney John Quick confirmed that it would not.

Councilmember Steve Cody **moved** to cancel the February Zoning Hearing and place the items on March 16, 2026, Zoning Hearing agenda. Councilmember Patrick Fiore **seconded the motion. All voted in favor (5-0).** The motion passed unanimously.

The February 23, 2026, Zoning Hearing was cancelled.

9. EMERGENCY ORDINANCES WITH PUBLIC HEARING: None.

10. ORDINANCES FOR SECOND READING AND PUBLIC HEARING:

A. AN ORDINANCE OF THE MAYOR AND VILLAGE COUNCIL OF THE VILLAGE OF PALMETTO BAY, FLORIDA RELATING TO DIVISION 2. – MEETINGS; AMENDING SECTION 2-44, "MEETINGS," OF THE VILLAGE CODE OF

ORDINANCES TO MODIFY THE START TIME OF PUBLIC MEETINGS FROM 7:00 P.M. TO 6:30 P.M.; PROVIDING FOR SEVERABILITY; PROVIDING FOR CODIFICATION; AND PROVIDING FOR AN EFFECTIVE DATE. *(Sponsored by Mayor Karyn Cunningham) (Passed on First Reading on November 17, 2025, Special Council Meeting)*

Item 10A was **moved** by Councilmember Patrick Fiore. **Seconded** by Councilmember Steve Cody.

The following speakers spoke in favor of the Ordinance during public comment:

- Henry Clifford (8875 SW 171st Street), Karen Baez-Wallis (7380 SW 141st Terrace); Vitality Falcovitch (9280 SW 167th Terrace).

The following speakers spoke opposed to the Ordinance during public comment:

- David Singer (8360 SW 154th Terrace); Beverly Gerald (14271 SW 74th Court).

Mayor Karyn Cunningham explained her prior request to begin Council meetings at 5:00 p.m. rather than 7:00 p.m. She stated that, as an example, the current meeting began at 7:00 p.m. and reports concluded at approximately 8:20 p.m. and explained that she had provided the Education Advisory Committee Chair an opportunity to speak and that her proposal to begin earlier was intended to allow sufficient time for board and committee reports.

Mayor Karyn Cunningham also explained that her original proposal would have scheduled requests, petitions, and public comments from 5:00 p.m. to 6:30 p.m., followed by recognitions at 6:30 p.m., and a second public comment period at 7:00 p.m. before beginning resolutions. She stated her intent was to give residents two opportunities to speak while also ensuring adequate time to celebrate recognitions. She expressed concern that the revised structure may place honorees at a disadvantage and clarified that her goal was to allow more time for both residents and recognitions.

Mayor Cunningham made a **motion to withdraw the item**.

Village Attorney John Quick confirmed the motion was in order.

Councilmember Steve Cody **seconded** the motion to withdraw. **All voted in favor** (5-0). The **motion to withdraw the item passed unanimously** by roll call vote.

B. AN ORDINANCE OF THE MAYOR AND VILLAGE COUNCIL OF THE VILLAGE OF PALMETTO BAY, FLORIDA, AMENDING SECTION 2.51, "CHARTER REVISION COMMISSION," OF THE VILLAGE CODE; REQUIRING THE VILLAGE COUNCIL TO FORWARD TO THE VILLAGE ELECTORS ALL CHARTER AMENDMENTS OR REVISIONS UNALTERED AS RECOMMENDED BY THE CHARTER REVISION COMMISSION; CLARIFYING THAT THE VILLAGE COUNCIL MAY SUBMIT ALTERNATIVE AMENDMENTS OR REVISIONS; AND PROVIDING FOR CODIFICATION, SEVERABILITY, AND AN EFFECTIVE DATE. *(Sponsored by Councilmember Marsha Matson) (Passed on First Reading on January 12, 2026,*

Regular Council Meeting)

Item 10B was **moved** by Councilmember Marsha Matson. **Seconded** by Vice Mayor Mark Merwitzer.

The following speakers spoke in favor of the Ordinance during public comment:

- Henry Clifford (8875 SW 171st Street), Beverly Gerald (14271 SW 74th Court).

The following speakers spoke neutral to the Ordinance during public comment:

- David Singer (8360 SW 154th Terrace).

Councilmember Marsha Matson explained the purpose and intent of the Ordinance and read into the record the amendment to section 2.51 of the Village Code.

Mayor Karyn Cunningham and Councilmember Steve Cody spoke opposed to the approval of the Ordinance based on the Village Attorney's prior legal opinion.

Following Council discussion, the question was called in favor of the Ordinance on Second Reading.

The Ordinance on Second Reading passed (3-2); Mayor Karyn Cunningham and Councilmember Steve Cody voted opposed.

C. AN ORDINANCE OF THE MAYOR AND VILLAGE COUNCIL OF THE VILLAGE OF PALMETTO BAY, FLORIDA, REGARDING COUNCIL DISCUSSION; AMENDING THE CODE OF ORDINANCES AT SECTION 2-49(A), "COUNCIL DISCUSSION, PUBLIC PARTICIPATION AND DECORUM", BY ESTABLISHING THE AMOUNT OF TIME EACH COUNCILMEMBER HAS TO DISCUSS AN ITEM; PROVIDING FOR CODIFICATION, SEVERABILITY, AND AN EFFECTIVE DATE. *(Sponsored by Mayor Karyn Cunningham) (Passed on First Reading on January 12, 2026, Regular Council Meeting)*

Item 10C was **moved** by Mayor Karyn Cunningham. **Seconded** by Councilmember Steve Cody.

The following speakers spoke in favor of the Ordinance during public comment:

- David Singer (8360 SW 154th Terrace).

Mayor Karyn Cunningham proposed that each Councilmember be afforded ten (10) minutes to discuss an agenda item, with the time period subject to extension by a majority vote of the Council. She stated that timekeeping during meetings would be the responsibility of the Village Manager, who could assign the task to staff to ensure consistency and effective meeting management.

Village Manager Nick Marano stated that staff was evaluating implementation procedures and anticipates being prepared to move forward with the proposed process in March.

Mayor Cunningham reported that while Councilmembers may wish to place statements on the record, not every question must be asked during the meeting, as doing so can delay Council business.

Councilmember Marsha Matson raised concerns regarding how the proposed ten-minute limit would apply, specifically questioning whether the time limit would include the question period. She reported that excluding questions could create inconsistency in how time is allocated.

Mayor Cunningham suggested that the ten-minute limit includes both questions and discussion.

Village Attorney John Quick advised that similar language could be incorporated into the relevant Code section to clarify that the time limit applies to comment and questions.

Councilmember Matson **moved** to amend the proposal to specify that the ten minutes would apply "to discuss and question" an agenda item. The motion was **seconded** by Mayor Cunningham.

Vice Mayor Mark Merwitzer stated that he did not believe staff responses to Councilmember questions should be included within the ten-minute limit.

Councilmember Matson expressed openness to that concept but questioned how time would be tracked to ensure accuracy.

Mayor Cunningham stated that the Village is exploring technology to assist with timekeeping. She further stated she would not support the amendment as reframed, expressing concern that extensive questioning during meetings may reflect a lack of preparation and contribute to delays. She indicated that, in her view, the ten-minute limit should include both questions and responses.

Village Attorney Quick reported that the proposed language allows for extension of the time limit by majority vote of the Council.

The motion failed (2-3); Councilmember Patrick Fiore, Vice Mayor Mark Merwitzer, and Councilmember Steve Cody voted opposed.

Village Attorney John Quick clarified that rebuttal time would be included within the proposed ten-minute limit, referencing appellate hearings as an example in which closing rebuttal is incorporated into the allotted time.

Councilmember Marsha Matson expressed concern that applying the ten-minute limit in this manner would be unfair to an item sponsor, as sponsors often require additional time to present the item and respond to questions. She stated that the limitation could disadvantage the sponsor.

Vice Mayor Mark Merwitzer made a **motion** to exempt the sponsor of an agenda item from the ten-minute time limit. Councilmember Marsha Matson **seconded** the

motion.

The motion failed (2-3); Councilmember Patrick Fiore, Mayor Karyn Cunningham, and Councilmember Steve Cody voted opposed.

Vice Mayor Mark Merwitzer **motioned** to allow a Councilmember to transfer their time to another Councilmember for discussion. Councilmember Patrick Fiore **seconded** the motion. The **motion passed (3-2)**; Mayor Karyn Cunningham and Councilmember Steve Cody voted opposed.

The **amended Ordinance passed (3-2)** via a roll call vote. Vice Mayor Mark Merwitzer and Councilmember Marsha Matson voted opposed.

11. ORDINANCES FOR FIRST READING WITH PUBLIC COMMENTS

A. AN ORDINANCE OF THE MAYOR AND VILLAGE COUNCIL OF THE VILLAGE OF PALMETTO BAY, FLORIDA, RELATING TO COUNCIL ACCOUNTABILITY AND RESPONSIVENESS TO THE PUBLIC AT COUNCIL MEETINGS; AMENDING CHAPTER 2, ARTICLE II, DIVISION 2, SECTION 2-49 OF THE VILLAGE CODE; ESTABLISHING A CLEAR DUTY TO RESPOND TO PUBLIC INQUIRIES MADE AT COUNCIL MEETINGS; PROVIDING PROCEDURES AND TIMELINES FOR RESPONSES; PROVIDING FOR SEVERABILITY, CODIFICATION, AND AN EFFECTIVE DATE. *(Sponsored by Councilmember Marsha Matson)*

Item 11A was **moved** by Councilmember Marsha Matson. **Seconded** by Vice Mayor Mark Merwitzer.

The following speakers spoke <u>in favor</u> of the Ordinance during public comment:

- Steve Kreisher (18201 SW 98th Avenue); James Woodard (address exempt from the public record); and Henry Clifford (8875 SW 171st Street).

Councilmember Marsha Matson explained and purpose and intent of the Ordinance proposing a standardized procedure for responding to public inquiries made during Council meetings to ensure residents receive timely responses and that answers are publicly shared. She read Section 2-49(G) into the record.

Vice Mayor Mark Merwitzer expressed appreciation for the intent of the item but questioned whether a Code amendment was necessary. He referenced observing another municipality's meeting format where the Mayor responded directly to public comments and noted that such responses could occur without legislative changes.

Village Attorney John Quick confirmed that a Code amendment is not required for the Mayor or Manager to respond to public comments or to follow up as needed.

Vice Mayor Mark Merwitzer suggested alternative approaches, including structured opportunities for residents to present concerns and for Council dialogue, similar to practices observed in the Village of Pinecrest.

Councilmember Patrick Fiore stated he would not support the item, reporting that

responding to residents is part of an elected official's responsibility and does not require legislation. He shared his personal practice of directly engaging with residents and coordinating with the Manager to obtain answers.

Councilmember Matson responded that while some Councilmembers are proactive, not all may operate the same way, and her intent was to ensure consistent and timely public responses. She stated she was open to alternative solutions if they better address the concern.

Mayor Karyn Cunningham invited residents to contact the Village Manager directly for follow-up.

Village Manager Nick Marano provided his contact information, including email and phone number, into the record.

The **Ordinance failed (1-4)** via a roll call vote. Councilmember Steve Cody, Vice Mayor Mark Merwitzer, Mayor Karyn Cunningham, and Councilmember Patrick Fiore voted opposed.

Vice Mayor Mark Merwitzer **motioned** to add agenda items 14A and 14B to the consent agenda. Councilmember Marsha Matson **seconded** the motion. **All voted in favor (5-0). The motion passed unanimously.**

ADD-ON RESOLUTION (ITEM NO. 14D): OUT OF ORDER

14D. A RESOLUTION OF THE MAYOR AND VILLAGE COUNCIL OF THE VILLAGE OF PALMETTO BAY, FLORIDA, DIRECTING THE VILLAGE MANAGER TO PRODUCE VIDEOS IN RECOGNITION OF WOMEN'S HISTORY MONTH IN AN AMOUNT NOT TO EXCEED FIVE THOUSAND AND 00/100 DOLLARS ($5,000); IDENTIFYING A BUDGETARY FUNDING SOURCE; PROVIDING FINDINGS; PROVIDING FOR IMPLEMENTATION; AND PROVIDING FOR AN EFFECTIVE DATE. *(Sponsored by Mayor Karyn Cunningham)*

Item 14D was moved by Mayor Karyn Cunningham. Seconded by Councilmember Steve Cody.

Mayor Karyn Cunningham explained the purpose of the Resolution and stated that funding for the initiative would be provided from the General Fund, or as determined by the Village Manager. She reported that each Councilmember would have the opportunity to select a woman in the Village to be recognized.

Vice Mayor Mark Merwitzer questioned why Cynthia Demos was selected to produce the videos instead of utilizing the Village's communications team.

Mayor Cunningham stated that while staff perform well, the project would require additional work beyond their regular duties.

Councilmember Marsha Matson stated that she supported the concept but objected to the selection of the named vendor based on her prior experience.

Councilmember Marsha Matson **moved to amend the Resolution** to make it open to other communications vendors. Vice Mayor Merwitzer **seconded** the motion.

Mayor Cunningham responded that Cynthia Demos is an approved vendor and a Village resident and explained that the work would need to begin promptly for presentation in March and referenced a prior video project that was well received and widely viewed. She also explained that the vendor is familiar with the community and capable of effectively executing the initiative.

Vice Mayor Merwitzer reported that previous policymaker videos were produced by a different vendor and expressed a preference for that vendor.

Mayor Cunningham responded that prior vendors, including those used for the State of the Village and policymaker videos, were significantly more expensive and stated that the total project cost would not exceed $5,000 and emphasized the collaborative nature of the initiative for Women's History Month.

The **motion to amend the Resolution to make it open to other communications vendors failed (3-2)**. Vice Mayor Mark Merwitzer and Councilmember Marsha Matson voted opposed.

The Resolution passed (3-2). Vice Mayor Mark Merwitzer and Councilmember Marsha Matson voted opposed.

12. CONSENT AGENDA

Councilmember Patrick Fiore **moved** to approve the consent agenda, items 12A, 14A, and 14B. Councilmember Steve Cody **seconded** the motion. **All voted in favor (5-0). The motion passed unanimously.**

A. A RESOLUTION OF THE MAYOR AND VILLAGE COUNCIL OF THE VILLAGE OF PALMETTO BAY, FLORIDA, RELATING TO THE "TREE CITY USA 2026" APPLICATION; RECOGNIZING THE IMPORTANCE OF NATIONAL ARBOR DAY BY REAFFIRMING THE VILLAGE'S COMMITMENT TO THE VILLAGE'S "TREE CITY USA" DESIGNATION; PROCLAIMING APRIL 24, 2026, AS "NATIONAL ARBOR DAY" IN PALMETTO BAY; AND PROVIDING FOR AN EFFECTIVE DATE. *(Sponsored by Administration and prepared by Public Services Director, Dionisio Torres)*

Item 12A was approved on the consent agenda.

13. RESOLUTIONS REQUIRING PUBLIC HEARING: None.

14. RESOLUTIONS WITH PUBLIC COMMENTS

A. A RESOLUTION OF THE MAYOR AND VILLAGE COUNCIL OF THE VILLAGE OF PALMETTO BAY, FLORIDA, RELATED TO ITB# 2023-11-002 CONTRACT, APPROVING V & G CONSTRUCTION SOLUTIONS, CORP. FOR THE INSTALLATION OF TRAFFIC CALMING DEVICES THROUGHOUT THE

VILLAGE; AUTHORIZING THE VILLAGE MANAGER TO EXTEND THE AMOUNT BUDGETED IN FISCAL YEAR 2025-2026 IN THE AMOUNT NOT TO EXCEED ONE HUNDERD TWENTY-FIVE THOUSAND DOLLARS AND ZERO CENTS ($125,000.00); AND PROVIDING FOR AN EFFECTIVE. *(Sponsored by Administration and prepared by Procurement Specialist, Alessia Bencomo)*

Item 14A was added to the Consent Agenda and approved as part of the Consent Agenda.

B. A RESOLUTION OF THE MAYOR AND VILLAGE COUNCIL OF THE VILLAGE OF PALMETTO BAY, FLORIDA, URGING SUPPORT OF SENATE BILL 1152 AND HOUSE BILL 1241, OR SIMILAR LEGISLATION, REQUIRING HANDS-FREE WIRELESS COMMUNICATION DEVICE USE WHILE DRIVING; AMENDING LEGISLATIVE PRIORITIES; AND PROVIDING AN EFFECTIVE DATE. *(Sponsored by Vice Mayor Mark Merwitzer)*

Item 14B was added to the Consent Agenda and approved as part of the Consent Agenda.

C. A RESOLUTION OF THE VILLAGE COUNCIL OF THE VILLAGE OF PALMETTO BAY, FLORIDA, OPPOSING SENATE BILL 1434 AND HOUSE BILL 979, "INFILL REDEVELOPMENT ACT," PROVIDING FOR TRANSMITTAL OF THIS RESOLUTION TO THE STATE OF FLORIDA, PROVIDING FOR AUTHORIZATION, AND PROVIDING FOR AN EFFECTIVE DATE. *(Sponsored by Councilmember Marsha Matson)*

Item 14C was withdrawn by the sponsor.

15. OTHER BUSINESS

Mayor Karyn Cunningham announced her intent to bring forward an item requesting that the Supervisor of Elections host a candidate informational workshop for the community. She stated the purpose would be to provide information on the process of becoming a candidate and that the timing would be appropriate to begin designing such a program.

Vice Mayor Mark Merwitzer announced that the lawsuit filed by Steve Cody was dismissed with prejudice by the judge and **moved** to direct the Manager and Attorney to, within 14 days to today's date, to publish on the front page of the Village's website all legal invoices, including all costs associated with the Cody vs. Merwitzer case, including requiring that the information be updated on a monthly basis for the duration of the litigation and shared across all Village social media platforms to ensure residents are informed about the use of taxpayer funds. Councilmember Marsha Matson **seconded** the motion.

At 10:00 PM, Councilmember Marsha Matson **moved** to extend the meeting an additional three minutes, until 10:03 PM. Vice Mayor Mark Merwitzer **seconded** the motion. **The motion failed (2-3)**. Mayor Karyn Cunningham, Councilmember Patrick Fiore, and Councilmember Steve Cody voted opposed.

The meeting was not extended.

16. ADJOURNMENT: The meeting adjourned at 10:00 PM.

The meeting minutes were approved this 2nd day of March, 2026.

Attest:

_____	_____
Mayor Karyn Cunningham	Village Clerk Missy Arocha

GENERAL PUBLIC COMMENTS:

Eric Tullberg
7884 SW 179th Terrace

- I learned that center part the traffic circles at SW 67 Ct. & SW 67 Av.is the responsibility of Pinecrest after the last Council meeting. I have suggested that Cutler Bay make the 44 ft. center circle of the SW 184 St. Traffic Circle a Pine Rockland. Thier General Manger said they already had plans to do that. It will be great to see pine trees when driving north on Old Cutler Rd. into Palmetto Bay.

ITEM 14B

Eric Tullberg
7884 SW 179th Terrace

- All texting by the operator of a moving vehicle should be prohibited, even if the device is not handheld. It is the lack of attention, not just taking your hands of the steering wheel, that is the problem. A verbal conservation does not distract as much

ITEM 14C

James Woodard
Address is Exempt from the Public Records Act

- Once again the folks in Tallahassee are attempting to preempt local zoning decisions that are the basis of our right to chose how we want to live. The language suggests that attempts to control density at the Agricultural Research Station, as well as the Woods, should they become available in the future, would be futile. Additional properties would likely fall as well. It is time to just say no. Please support this resolution

Eric Tullberg
7884 SW 179th Terrace

- If SB 1434 & HB 979 pass, the citizens of VPB will have no say on what is to be developed. The cases noted will be only the start of over-development.

AGENDA ITEM NO. 5.B

Item Cover Page

REGULAR COUNCIL AGENDA ITEM REPORT

DATE:	March 2, 2026
SUBMITTED BY:	Missy Arocha, Village Manager's Office
ITEM TYPE:	Report
AGENDA SECTION:	VILLAGE MANAGER'S REPORT
SUBJECT:	Departmental Updates
SUGGESTED ACTION:	

ATTACHMENTS:
Manager's Report - March 2, 2026

Manager's Report

BUILDING & PERMITTING

January

FY2025-2026 Budgeted Projects

- Building Division Software
  - Building Permit and Inspection software building is underway. Expected to launch 2026.

- Building Division
  - Received 251 permits applications.
  - 254 residents and contractors visited the Division.
  - Inspections completed:
    - Building: 562
    - Mechanical: 22
    - Electrical: 116
    - Plumbing: 61
    - Zoning: 89

Total: 850

FINANCE

January

- The expenditures in January 2026 were $1,998,813, 7.61% of the total budget, compared to budgeted expenditures of $2,190,168, a surplus of .72 % for the month. Please note that this analysis is based on a straight-line allocation of the budget for the year, which is $ 2,190,168 or 8.33% per month. This does not consider the timing of expenditures such as annual bond payment or seasonal events such as Summer Camp or Village events.

- YTD the Village has $ 6,810,558 or 25.91 % compared to budgeted expenditures of $8,760,672 or 33.33%.

Manager's Reportable Checks:

Check Transfer Date	Check Transfer #	Vendor Name	Description	Total Amount
1/9/2026	48692	BEEFREE, LLC.	FREEBEE DECEMBER	$ 20,677.80
1/9/2026	48694	GAME TIME	CRP PURCHASE & INSTALLATION OF NEW PLAYGROUND EQUI	$ 223,319.78
1/9/2026	48697	OFFICE OF THE SHERIFF OF MDC	VOPB LOCAL PATROL - DECEMBER 2025	$ 941,912.58
1/9/2026	48719	Institute for Regional Conserv	THE WOODS - PHASE 1	$ 38,900.00
1/9/2026	48729	PLATFORM GROUP, LLC.	DESIGN-BUILD - PBP SKATE PARK	$ 19,500.00
1/9/2026	48733	ROCK POWER PAVING	Palmetto Highlands - SW 83rd Ave and SW 170th St	$ 13,268.40
1/9/2026	48741	THE STREET PLANS COLLABORATIVE	SAFE STREETS AND ROADS FOR ALL (SS4A)	$ 35,600.00
1/16/2026	48753	CALVIN GIORDANO & ASSOCIATES	PUBLIC SERVICE PERMITTING AND INSPECTIONS FY 24/25	$ 14,372.60
1/16/2026	48756	COBRA LEGAL SOLUTIONS, LLC.	LUXCOM V. VILLAGE OF PALMETTO BAY	$ 13,570.20
1/16/2026	48759	HARTEC GROUP, INC.	PAVING AND DRAINAGE IMPROVEMENTS - SUB-BASIN 44	$ 363,764.50
1/16/2026	48768	WEISS SEROTA HELFMAN	006-1 YACHT CLUB AT LUXCOM-BETH HARRIS CLAIM	$ 49,786.26
1/16/2026	48768	WEISS SEROTA HELFMAN	006-7 YACHT CLUB BY LUXCOM-CHALLENGE MARINE OPERAT	$ 30,216.15
1/16/2026	48785	FLORIDA TRANSCOR, INC.	THERMOPLASTIC PAVEMENT MARKING MACHINE	$ 22,575.00
1/16/2026	48790	PIMENTEL CONSTRUCTION GROUP	SW 92 AVENUE ROADWAY IMPROVEMENTS	$ 238,692.25

1/16/2026	48795	WESCO TURF, INC	PURCHASE OF ONE (1) TORO GROUNDSMASTER 3500-D MOWE	$ 47,560.19
1/30/2026	48832	CORELAND CONSTRUCTION CORP.	SW 174TH STREET ROADWAY IMPROVEMENTS	$ 31,248.15
1/30/2026	48838	Metro Express, Inc.	SIDEWALK IMPROVEMENTS - 2025-2026	$ 55,965.50

IT DEPARTMENT

January

1. Help Desk statistics:
    a. 465 new work orders created
        i. 167 (37%) from system notifications, network issues, or cybersecurity alerts.
        ii. 27 (6%) preventative maintenance tasks.
        iii. 256 (57%) submitted by staff, charter officers, and elected officials.
    b. 437 work orders completed.
2. Acquired Starlink internet services for new Coral Reef Park Building
3. Developed network plan for new Coral Reef Park building including external WiFi services.
4. Deployed cybersecurity awareness training curriculum, scheduled for February 16th.
5. Deployed updated phishing awareness campaign for 2026, already in progress.
6. Represented the Village at FLGISA. org's Winter Symposium in Kissimmee, FL.
7. Assisting Parks with IT tasks related to the new CRP building
    a. Relocating staff.
    b. Relocating Ricoh copier.
    c. Decommissioning gear inside the Coral Reef trailer.

Upcoming Goals

1. Go-live, new Coral Reef Park Building network infrastructure & staff relocations.
2. Go-live, MyRec park management system for Coral Reef Park.
3. Testing phase completion, Building permitting project.
4. Implementation of new Council Chamber features for time management, electronic voting, etc.

HUMAN RESOURCES

January

- 1 Recruitment Ad
  - Passport Acceptance Agent
- 0 Applications Reviewed
- 12 Interviews scheduled
  - Park service Aide
- 4 Pre-Employment Meetings
- 1 New Hire
  - Recreation Attendant
- 0 Training Sessions
- 0 Separations of Employment
- 10 Transfers/Updates/Evaluations
- Staffing Update as of 2/9/2025 (14 Vacancies)

VACANCY DETAIL **Department**	**Position**	**Additional Comments**
Active Recruitments		
Village Clerk	Passport Acceptance Agent (1)	Advertisement closed on 1/14/2026; PT temp hired until position is filled.
Parks & Recreation	Park Service Aide (5)	Pre-employment underway
	Total Active Recruitments- PT	**6**
	Total Active Recruitments- FT	**0**
	Total Active Recruitments	**6**
Positions on Hold		
Village Clerk	Administrative Assistant (1)	On hold.
Planning & Zoning	Zoning Administrator (1)	On hold.
Public Services	Tree Trimmer (1)	On hold.
	Maintenance Worker I – Facilities (2)	On hold.
Parks & Recreation	Maintenance Worker I – Parks (1)	On hold.
	Parks & Recreation Supervisor (2)	On hold.
	Total On-Hold- PT	**0**
	Total On-Hold- FT	**8**
	Total On-Hold	**8**

COMMUNICATIONS

January

- 44 FB/Twitter Postings (including event and meeting postings)
- 11,348 FB Followers
  - 22 New FB followers – 2.32% increased FYTD
- 9,695 Instagram Followers – 3.18% increased FYTD
  - 117 New IG Followers
- 9,107 Email Subscribers – 1.86% increased FYTD
- 4 Videos Produced:
  - #PBCelebrates250 Mayor Video
  - Camping in the Park Reel
  - Recycling Promo Video
  - Freebee Promo Video
- 3 Village Vibes Bi-Weekly E-Newsletters
  - 1/3 Village Vibes
  - 1/17 Village Vibes
  - 1/31 Village Vibes
- 11 Promotional/Informational Campaigns – **16 Posts**
  - CRS Post – 1
  - Art South Exhibit – 2
  - Call to Artist – 2
  - #PBCelebrates250 – 1
  - 2026 Car Show – 1
  - Camping in the Park – 3
  - Blood Drive – 1
  - Driver Vault App – 1
  - AARP – 2
  - Recycling Promo – 1
  - Freebee Promo – 1
- Meetings Broadcast: **1**
  - 1/12 Hybrid Council Meeting
- Events Attended/Promoted:
  - 1/8 PBBA
  - 1/12 Dade Art Exhibition
  - 1/15 47th Annual West Perrine MLK Breakfast
  - 1/27 Education Advisory Committee
  - 1/30 Mayor visits Career Day

- Baybot User Interactions: **171**

GRANTS

January

- New Grant Applications (1)
  - Creative Forces Community Engagement Grant (America 250)

- Grants Approved (0)

- Closed Grants (0)

- Active Grants (15)
  - FDEM Florida Recovery Obligation Calculation (F-ROC) – *2026 abatement activities due March 2026*
  - FDEP Resilient Florida – Assessment and Planning for a Resilient Palmetto Bay (comprehensive vulnerability assessment) – *closeout and final request for reimbursement to be submitted February 2026*
  - FDOT Public Transit Service Development Grant – On-Demand Transit Service – *contract fully executed November 2025, two additional Freebee vehicles scheduled for February 2026*
  - FRDAP Coral Reef Park Trail Renovations-Recreational Trails Program (RTP) – *closeout package in review by agency*
  - Safe Street 4 All (SS4A) – VOPB Street Safety Action Plan Development – *draft action plan in progress*
  - Sub-Basins 12/42 Stormwater Improvements – *contract executed*
  - Sub-Basin 43 (Hazard Mitigation Grant Program) – *reimbursement 2 in review by agency, pre-Phase 2 information requests in progress*
  - Sub-Basin 43 (State Appropriation)
  - Sub-Basin 44 (State Appropriation) – *reimbursement request in progress*
  - Sub-Basins 57/96 (State Appropriation) – *closeout and reimbursement request in progress*
  - Transportation Planning Organization – Multimodal Transportation Master Plan – *grant closeout anticipated March 2026*
  - USTA Tennis Facility Grant – Coral Reef Park Fencing – *pending reimbursement and press release*
  - Village Council's Palmetto Bay "Adopt-A-Pet" Council Program – *program in progress*
  - Village Council's Senior Assistance for Veterinary Emergencies (SAVE) Council Program – *program in progress*
  - *Pre-Award Process* – Veterans Park Phase 1 Appropriation

PARKS & RECREATION

January

Palmetto Bay Park

- Ballet at the Park: Monday thru Thursday classes 3pm - 8pm; Friday Adult and Private Lessons 12pm – 6pm
- Flamenco Saturdays 9am – 11am
- I9 Sports: on Saturdays and Sundays 8am - 2pm
- MJ Hoops: Tuesdays, Wednesdays, and Thursdays 5:45pm & 8:30pm
- Bay Lions Soccer Club: Tuesday, Thursdays & Friday 4pm-6pm
- Juventus Soccer Club: Mondays, Wednesday, Saturdays, Sundays
- Travel Softball: Stingrays, Lady Canes, Rock Gold, Contenders: Monday/Friday 4pm, 6pm & 8pm
- Howard Palmetto Baseball/Softball Association- Youth Softball Leagues 8U, 10U 12U- practices Tuesdays, Wednesdays, Thursday 6pm - 9:30pm; Games Fridays 7pm and Saturdays 9am and 10:30am
- Baptist Health Senior Stretch Exercise Class: 10:30am & 11:30am
- Pickleball Reservations: 0
- Total Softball Games: 4
- Total Softball Practices: 109
- Total Pavilion/Rec Room Rentals: 14

Coral Reef Park

- Pickleball Reservations – (Courts under construction)
- Tennis Court Rentals: 227
- USTA Tennis Leagues: 91
- Picnic Areas/Pavilion/Gazebo Rentals: 25
- Baurball Soccer training, Weekdays 4pm - 6pm
- Beast Volleyball Tuesday, Thursday and Friday 5 – 6:30pm
- Orange Ball and Green Ball Tennis, Tuesday and Thursdays 4pm - 6:30pm Total participants: 10
- Palmetto Bay Soccer participants: 132
- Bay Lions FC Soccer participants: 86
- Howard Palmetto Baseball (T-Ball) participants: 152

Perrine Community

- 0 Rental
- 1 Program
- 0 Waiver

Ludovici Park

- 7 Programs
- 1 Rentals
- 0 Event
- 17 Waiver

Thalatta Estate

- 0 Programs
- 10 Rental
- 7 Photoshoot
- 0 Event
- 1 Rehearsal
- 4 Waiver

Fee Waivers- Requested and Granted in January 2026

Group Name	Date	Time	Location	Type of Event	Total Value Granted	Date of Request
Musicore Inc	1st, 2nd, & 3rd Tuesdays 2026	4pm-6pm	EAF COMMUNITY ROOM	Music Classes	$ 268.00 (Total $9,648 for 36 classes)	1/8/2026
CRE First Grade Class	Wednesday, March 18, 2026	9am-12pm	CRP Field Rental	Field Trip	$ 135.00	1/15/2026
MDCPS	Thursday, May 7, 2026	8am-1:30pm	Thalatta Estate	Principal Induction Ceremony	$ 650.00	1/15/2026
Family Tree of Life Center	Thursday, January 29, 2026	6:30pm-8pm	EAF Community Room	Human Trafficking Presentation & Film	$ 150.00	1/15/2026
Adult Gifted League	Saturday, January 24, 2026	7pm-10pm	EAF Community Room	Awards Ceremony	$ 300.00	1/15/2026
CRE PTA Auction Donation	Saturday, January 31, 2026	1pm-5pm	N/A	Annual Fun Fair	$ 250.00	1/27/2026
Chabad of Palmetto Bay	Sunday, February 15, 2026	7pm-10pm	Thalatta Estate	Jewish Music Event	$ 850.00	1/28/2026

March 2026 Upcoming Events/Programs/Projects

Palmetto Bay Park

- Ballet at the Park: Monday – Thursday 4 - 8pm; Adult class/lessons: Fridays 12 - 6pm
- Flamenco Saturdays, 9am – 11am
- I9 Sports: Saturdays, 8am - 2pm
- MJ Hoops: Tuesdays, Wednesdays, Thursdays, 5:45pm-8:30pm
- Juventus Soccer Club: Mondays, Wednesdays, Saturday, Sundays

- Bay Lions Soccer Club: Tuesdays, Thursdays and Fridays
- Howard Palmetto Baseball Softball Association Fall League registration
- Travel Softball: Stingrays, Rock Gold, Lady Canes, SF Contenders: Mon-Friday 6pm & 8pm
- High School practices begin late January
- Baptist Health Senior Stretch Exercise Class: 10:30am & 11:30am
- Kick CF Kickball Tournament – Saturday, March 14, 8:30am
- Senior Pickleball & Picnic – Thursday, March, 10am – 1pm

Coral Reef Park

- Palmetto Bay Soccer season starts: December 1st through February 14th, 4pm-5:30pm (Games Fridays and Saturdays)
- Bay Lions Soccer Club: 4:30pm – 7pm (Games are Sundays)
- Orange Ball and Green Ball Tennis, Tuesdays and Thursdays, (4pm – 630pm) December 2nd
- Baurball Soccer Training, Weekdays, 3pm – 5:30pm
- Beast Volleyball Tuesday, Thursday and Friday, 4pm – 5:30pm
- TTT Fitness, Monday - Thursday, Saturday, 9am-10am and 4:30pm – 5:30pm.
- Coral Reef Park Recreation Center Ribbon Cutting – Saturday, March 7, 10am – 11am
- Annual Picnic – Saturday, March 7, 11am – 2pm
- Miami Kidney Walk – Sunday, March 22 8:30am – 11:30am.

Perrine Community House

- 0 Rental
- 0 Waiver
- 2 Program
- 1 Event

Thalatta Estate

- 4 Rental
- 1 Rehearsal
- 6 Photoshoot
- 0 Event
- Programs: Yoga by the Bay – 5
- 5 Waiver

Ludovici Park

- WAIVER - Italian Classes for Kids – every Saturday at 9 AM
- WAIVER-VPB Library Adult Coloring – second and fourth Thursday at 5PM
- WAIVER - VPB Library Adult Book Club - Third Thursday of the month at 3PM
- WAIVER - Cutler Bay Community Theater – Mondays, 6/9 at 7pm
- WAIVER - Musicore – first, second and third Tuesdays of the month at 4-6 PM
- WAIVER - Garden Club – every fourth Tuesday at 6PM
- WAIVER – VPB Library Yoga Class 3/7 at 11:30 Amphitheater
- Core and Stretch Class – every Wednesday at 10:30am
- Rentals: 2

Park Projects

Palmetto Bay Park Irrigation Redesign – Calvin Giordano

- 12/13/2024 submittal package for Building Department review
- 4/25 Release Invitation to Bid
- 6/9 one (1) Bid Received
- Evaluation of Project based on budget
- February 2026; completion of new specifications and release of RFP

Coral Reef Park – Design-Build Recreation Center

- Execution of design-Build Contract with Waypoint Construction January 2024
- Currently under construction
- Expected Date of Completion – March 7, 2026

Coral Reef Park Pineland - IRC

- Task 4-continue management of rock pineland.
- Prescribed burn: In consultation with Miami Dade's Division of Natural Areas Management regarding readiness and timeline for prescribed burn following amendment to Coral Reef Park Pineland Management Agreement
- Draft agreement received February 5, 2026, and currently under review by Parks Dept and Attorney

The Woods

- Phase I FY 25-26 budget $250,000
- Phase I Approved on 11-2-25 IRC to proceed at a cost of $194,500, execution of contract in process.
- PO approved for purchasing of benches, trash receptacles, signs, and pet waste stations
- Community Workshop scheduled for December 6, 2925, 1:00pm at the Perrine Community House.
- IRC – Currently working on Phase 1 Required Components

Veteran's Park

- 100% Plans Received December 2024
- Kimley Horn Currently working on permits
- DERM – Approved 12/16/2025
- Miami-Dade Water and Sewer plans – 9/2025 approved
- RFP for construction of Phase 1 to be Released February 2026
- Woody Williams Foundation for the Gold Star families Memorial Monument – Under Contract
- Designed Approved via Resolution No.2025-66
- February 2026- Consultant completed specifications Phase 1
- ITB to be advertised February 17, 2026
- Pre-Bid Meeting: February 24, 2026
- Last Day to Submit Questions: March 2, 2026
- Last Addendum Issued: March 3, 2026
- Submission of Bid Due: March 12, 2026
- Presentation of Village Council: April 2026

Pickleball Center

- Council approved Construction of Design Build Indoor Pickleball Center-
- Contract for Build-Out (Waypoint) executed 9-2025; site work began and leveling of fill 10/2025
- Management/Operations (Diadem) approved by Council 9/17/2025
- Design and permitting in Progress
- Currently under construction-land clearing/prep completed
- Installation of Construction Fence: February 2026

Coral Reef Park Playground Improvements

- 12/9/24 approved by Village Council
- 1/25 Contract executed
- Installation scheduled to begin October 27, 2025, with completion date of December 19, 2025
- Confirmed equipment delivery and start date of October 29, 2025, project underway.
- Project Completed

Skate Park – Palmetto Bay Park

- Release RFP February 2025
- Pre-submission Meeting 2/18/2025
- Received 2 Proposals on 3/7/2025
- Proposal approved by Village Council 6/2/2025
- Design 9/12/2025
- Community Meeting scheduled for November 6, 2025, and December 10, 2025, at 6pm at Palmetto Bay Park
- Input to be evaluated and revised design processed and shared
- Next steps: construction drawings and permits
- Staging and mobilization Spring 2026 and estimated completion July 2026

Thalatta Enclosed Pavilion Design

- 2/25 Procure a professional consultant for design of enclosed pavilion
- 3/4/2025 On-site meeting with Chisholm Architects
- 3/12/2025 Received Proposal from Chisholm Architects
- Chisholm Architect working on project
- Notice To Proceed issued; 40% of Phase 1 completed
- Chisholm currently in discussion with SFWMD
- SFWMD requested updated survey-quotes in process
- February 4, 2026; Chisholm advised survey under review.

Coral Reef and Palmetto Bay Parks Asphalt Trail Rehab

- Invitation to bid issued and five (5) bids received
- Recommended vendor approved by Village Council 6/2/2025
- Contractor sent notice he will not be able to follow through with proposal
- In communications with the lowest bidder
- Approval for second lowest bidder presented to Village Council at the March meeting.

PUBLIC SERVICES

January

- **Freebee Ridership:**
  1546 Completed Rides (C.R.)
  1802 Total Passengers
  Ridership has decreased by -29 C.R since November and decreased by -63 C.R. since December

- **IBus Ridership:**
  607 A.M. Route
  476 P.M. Route **Total: 1083 Riders**
  Ridership has increased by 214 since November and increased by 151 since December

- **Facilities Maintenance Division**
  28 Open Work Orders – *-17 less than November* *-15 less than December*
  33 Closed Work Orders – *-9 less than November* *-33 more than December*

- **Public Works**

6 - Signs Repaired/Installed	*1 more than November*	*3 more than December*
0 - Graffiti Removal	*0 same as November*	*0 same as December*
8 - Pothole/Shoulder Repairs	*2 more than November*	*-8 less than December*
6.98 - Tons of Debris/Trash Removal	*-19.92 less than November*	*-2.5 less than December*
59 - Drain Cleaning/Repairs (inlet tops)	*7 more than November*	*-15 less than December*
1,065 - Linear feet of sidewalks installed	*285 more than November*	*-142 less than December*
5060 - Paving Linear ft	*5060 more than November*	*5060 more than December*
10 - Sidewalks inspected	*-7 less than November*	*-25 less than December*
9 - Drainage Inspection	*-21 less than November*	*-11 less than December*
54 - Catch Basin	*2 more than November*	*21 more than December*
0 - Outfalls	*0 same as November*	*-32 less than December*
1,320 - Linear Feet Pipe	*-281 less than November*	*-5357 less than December*
0 - Canal Cleaning/ Clearing	*0 same as November*	*0 same as December*
1 - Flooding Investigations & Resolutions	*1 more than November*	*1 more than December*
4 - Complaints Reported to MDC	*-7 less than November*	*-5 less than December*
15 - Trees/Shrub Trimming/Removal	*-83 less than November*	*-139 less than December*
173 - Tree & Landscaping Inspections	*-45 less than November*	*-93 less than December*

Capital Projects

- For Sub Basin 44 we completed Additional Drainage along SW 167TH Street. Trench restoration, swale grading, and sod installation complete. Final roadway restoration scheduled for January 2026.
- Sub Basin 44, Final roadway restoration scheduled for mid-February.
- SW 92ND Avenue complete streets asphalt corrections complete, permanent speed tables installed but will also require corrections.
- Council approved Drainage Sub Basin 42 contract award.
- Electrical EOR completed photometrics and Final Inspection of SW 174TH Street Complete Streets lighting. Processing project closeout.
- Working on extension of V&G contract for installation of traffic calming devices.
- Roadway improvements at 8240 SW 170TH Street and SW 83RD Avenue and SW 170TH Street. Corrections needed at 8240 SW 170TH Street.
- Continue working with DERM/RER on RAI for PS Parking Lot Improvement Project (On-going)
- Commenced work for Exterior Painting of Village Hall and Public Services Building.
- In-house Installation of temporary speed tables along SW 174TH Avenue and SW 88TH Ct, SW 74TH Place Between SW 156TH Street and SW 152ND Street, and SW 85TH Avenue Between SW 174TH Street and SW 172ND Street.
- Working on Village Permit and Shop Drawings review for Drainage Sub Basin 12.
- Completed Sidewalk improvements for SW 87TH Avenue between SW 144TH -SW 141ST Street along East Side and ADA connections. Completed Sidewalk gap along 8600 SW 144TH Street.
- N Cartee Rd Water main extension project received Final Inspection, working on conveyance.

Upcoming Projects

- Notice to Proceed/Commence Sub Basin 12 Drainage Project.
- Work on VPB permit and shop drawings review for Sub Basin 42.
- Sidewalk & roadway improvements at Intersection for SW 160TH Street and SW 79TH Avenue.
- Freebee Service expansion launch, from 2 to 4 vehicles starting February 4th.
- Exterior Painting of Village Hall & PS (On-going) should be completed by months end.
- Council approved Traffic Calming Installation with V&G. Will work with procurement to complete contract extension and issue Notice to Proceed.
- Receive and Open bids for SW 82ND Avenue Bike Lanes on February 5th.
- Issued Invitation to Bid for Localized Drainage Improvements, bids due March 5th.
- SS4A Action Plan and Village wide Multi-Modal Transportation Master Plan update to be presented to Council during March 10th COW Workshop.
- Coordinating with contractor for install of landscaping at SW 92ND Avenue complete street medians.

POLICE

January

- South Florida Crime Prevention Association Meeting
- Citizen Crime Watch meeting
- Boy scout meeting on Internet Safety
- Tuscany Estates
- Crimes/Calls for Service:
    - Auto Thefts
    - Commercial Burglaries
    - Residential Burglaries
    - Vehicle Burglaries
    - Robbery
    - Domestic Dispute/Disturbance
    - Baker Acts
    - Crashes

February Upcoming Events

- DARE classes at Christ Fellowship

PLANNING & ZONING

January

FY2025-2026 Budgeted Projects

- Administrative Variance Applications received:
  - None

- Administrative Site Plan Review Applications Received:
  - SP-2026-001 Palmer Trinity
  - SP-2026-002 Take 5 Oil Change

- Zoning Verification Letter
  - ZVL-26-001 18200 Holcomb Ave
  - ZVL-26-002 18161 SW 98 CT
  - ZVL-26-003 13981 S Dixie Hwy

- Zoning Hearing Applications Received:
  - V-26-001 8917 SW 158 ST
  - RZ-26-001 8917 SW 158 ST

- Zoning Inspections and Reviews
  - Planning and zoning permits reviewed: 61
  - Planning and Zoning Inspections: 89

- Business Tax:
  - Renewals: 14
  - New Certificate of Use: 12
  - Business Tax: 17

- GOGov Permits:
  - Garage Sale: 15
  - Real Estate Banner: 0
  - Solicitation: 0
  - Special Event Banner: 0
  - Business Improvements Grants: 0

- Code Compliance Division
  - Common violations: property maintenance, residential and commercial
  - New cases: 59
  - Close Cases: 35
  - Citations Issued: 14
  - Special Master cases: 9

Upcoming Events

- February 23, 2026, Zoning Hearing CANCELLED
- February 17, 2026, Special Master Hearing

Sustainability and Resiliency

January

- CRS
  - Working with WSP on reducing rank from #5 -> #4
  - No recertification process necessary for this year
  - Hoping to submit for new rank Fall 2026

- USA 250 Celebration



  - Coordinating with reenactment group for Camping in the Park; aspiring to have a walking museum of memorabilia
  - Coordinating with Be Strong for a sandwich making event in May

- AIPP
  - Applications received for SW 152 Street & Old Cutler Road Traffic Circle: 36
    - Application closes to public on January 30, 2026
  - Next AIPP Board meeting will be held on January 20, 2026.

- Village of Palmetto Bay Cleanup Day
  - Scheduled for May 2nd, 2026, for PB Celebrates 250 theme of community service

- Resiliency Committee
  - Next scheduled meeting: January 26, 2026, with Tree Advisory Board to collaborate on the educational signage for the Woods

- Recycling Drive
  - Spring 2026 Recycling Drive scheduled for Saturday, April 25th, 2026.
  - Working on new flyer with Communications

- Plastics Challenge
  - Plastic Bench has arrived and will be installed soon!
  - Depending on installation date, Communications will film a video
  - New challenge begins January 2026

- Thank you to everyone for bringing in plastic! Let's keep it going 😊

AGENDA ITEM NO. 5.C

Item Cover Page

REGULAR COUNCIL AGENDA ITEM REPORT

DATE:	March 2, 2026
SUBMITTED BY:	Missy Arocha, Village Manager's Office
ITEM TYPE:	Report
AGENDA SECTION:	VILLAGE MANAGER'S REPORT
SUBJECT:	Lobbyist Legislative Update
SUGGESTED ACTION:	

ATTACHMENTS:
Appendix A

Appendix A
GrayRobinson Lobbyist Legislative Monthly Bill Report Updates

January

I. *2026.01.09 - The Village of Palmetto Bay Weekly Bill Report*

GRAYROBINSON
ATTORNEYS | ADVISORS | CONSULTANTS

The Village of Palmetto Bay
Ordered by Bill Number

HB 0037 **Removal, Storage, and Cleanup of Electric Vehicles** by Nix, Jr.

Removal, Storage, and Cleanup of Electric Vehicles: Requires counties to establish daily administration fee for proper storage of certain electric vehicles; authorizes municipalities to establish daily administration fee for proper storage of certain electric vehicles; provides maximum amount for such fees; defines "daily administration fee" & "proper storage"; provides that motor vehicle insurers are not required to pay certain costs; provides that reasonable fee for service includes any daily administration fee. Effective Date: July 1, 2026

Current Committee of Reference: House State Affairs Committee

SB 0044 **Electronic Payment of Public Records Fees** by Rouson

Electronic Payment of Public Records Fees; Requiring an agency subject to ch. 119, F.S., to provide an electronic option for payment of fees associated with a public records request, etc. Effective Date: July 1, 2026

Current Committee of Reference: Senate Governmental Oversight and Accountability

SB 0048 **Housing** by Gaetz

Housing; Authorizing a landlord to accept reusable tenant screening reports and require a specified statement; defining the term “primary dwelling unit”; requiring, rather than authorizing, local governments to adopt, by a specified date, an ordinance to allow accessory dwelling units in certain areas; requiring the Office of Program Policy Analysis and Government Accountability to evaluate the efficacy of using mezzanine finance and the potential of tiny homes for specified purposes, etc. Effective Date: 7/1/2026

Current Committee of Reference: Senate Appropriations Committee on Transportation, Tourism, and Economic Development

HB 0067 **Reduction of Annual Assessment Increases for Homestead Property** by Holcomb

Reduction of Annual Assessment Increases for Homestead Property: Proposes State Constitutional amendment reducing maximum amount that homestead property’s assessed value may increase annually.

Current Committee of Reference: No Current Committee

HB 0071 **Distribution of Funds to Homestead Property Owners** by Holcomb

Distribution of Funds to Homestead Property Owners: Creates Homestead Property Tax Relief Program within DFS; defines “eligible homesteader”; requires CFO to annually issue warrants of specified amount to certain homestead property owners beginning & ending on specified dates; requires CFO to work with county property appraisers for specified purpose; provides future repeal. Effective Date: July 1, 2026

Current Committee of Reference: No Current Committee

SB 0092 **Employee Protections** by Gaetz

Employee Protections; Providing that public officers, public employees, and local government attorneys commit a breach of the public trust when they initiate adverse personnel actions against specified agency employees or independent contractors under certain circumstances; prohibiting agencies and independent contractors from taking specified actions against employees or certain persons for disclosing certain information to the Commission on Ethics; requiring that information disclosed include specified violations or alleged violations; providing that specified provisions protect employees and persons who submit written complaints to the commission or provide information to an investigator during an investigation of a complaint or referral, etc. Effective Date: 1/1/2027

Current Committee of Reference: Senate Ethics and Elections

HB 0101 **Utility Terrain Vehicles** by Gentry

Utility Terrain Vehicles: Authorizes utility terrain vehicle (UTV) to be operated during all hours; authorizes operation of UTVs on certain roadways & on certain parts of State Highway System; authorizes DOT to prohibit use of UTVs under certain circumstances; authorizes persons possessing certain licenses to operate UTV; requires owners or operators of UTV to comply with certain requirements & regulations; authorizes county or municipality to restrict operation of UTVs under certain circumstances; provides civil penalties; requires DHSMV to issue license plate to owner or lessee of vehicle registered as UTV upon payment of certain taxes & fees; requires that license plates for UTVs comply with specified provisions. Effective Date: January 1, 2027

Current Committee of Reference: House Government Operations Subcommittee

HB 0103 **Local Business Taxes** by Botana

Local Business Taxes: Repeals provisions related to local business taxes & authorizes certain municipalities to continue to impose business taxes. Effective Date: July 1, 2026

Current Committee of Reference: House Intergovernmental Affairs Subcommittee

HB 0105 **Local Government Enforcement Actions** by Brackett

Local Government Enforcement Actions: Prohibits certain enforcement actions by counties, municipalities, & special districts; authorizes persons or business entities subject to such actions to submit request for review; requires counties, municipalities, & special districts to review such actions & respond within specified time period; authorizes filing of legal action & provides legal remedies; provides for certain protections from retaliation; provides for preemption. Effective Date: October 1, 2026

Current Committee of Reference: House Civil Justice & Claims Subcommittee

SB 0118 **Assessments Levied on Recreational Vehicle Parks** by Truenow

Assessments Levied on Recreational Vehicle Parks; Providing that certain special assessments on recreational vehicle parks levied by counties, municipalities, and special districts, respectively, may not be levied against a certain portion of a recreational vehicle parking space or campsite; requiring

counties, municipalities, and special districts, respectively, to consider a recreational vehicle park's occupancy rates for a certain purpose, etc. Effective Date: Upon becoming a law

Current Committee of Reference: Senate Finance and Tax

SB 0122 **Local Business Taxes** by Truenow

Local Business Taxes; Repealing provisions relating to local business taxes; authorizing certain municipalities to continue to impose a business tax; authorizing such municipalities to revise the definition of the term "merchant" in a specified manner, etc. Effective Date: 7/1/2026

Current Committee of Reference: Senate Finance and Tax

HB 0139 **Adverse Personnel Actions and Ethics Complaints** by Maney

Adverse Personnel Actions and Ethics Complaints: Prohibits agencies & independent contractors from taking specified actions against employees for disclosing certain information to Commission on Ethics; requires that information disclosed include specified violations or alleged violations; requires disclosure of specified information to commission; provides that specified provisions protect employees & persons who submit written complaints to commission or provide information to investigator during investigation of complaint; authorizes certain employees or applicants for employment to file complaints in accordance with specified provisions; authorizes such employees or applicants to pursue specified administrative remedy or civil action within specified timeframe; authorizes local public employees to file complaint with appropriate local governmental authority; specifies requirements for administrative procedures created by local governmental authorities; authorizes such employee to bring civil actions in court of competent jurisdiction under specified conditions; requires specified relief; provides that it is affirmative defense to certain actions that adverse personnel action was predicated on grounds other than exercising of certain protected rights; requires commission to deliver complaints & any amendment thereto to agency conducting certain investigation, upon agency's written request; requires commission to deliver complaints & any amendment thereto to certain persons upon notarized written request. Effective Date: July 1, 2026

Current Committee of Reference: House Government Operations Subcommittee

---

HB 0145 **Suits Against the Government** by McFarland

Suits Against the Government: Increases statutory limits on liability for tort claims against state & its agencies & subdivisions; authorizes subdivision of state to settle claim in excess of statutory limit without legislative action regardless of insurance coverage limits; prohibits insurance policy from conditioning benefits on enactment of claim bill; specifies that limitations in effect on date claim accrues apply to that claim; revises period within which certain claims must be presented; revises exceptions relating to instituting tort claims against state or agencies or subdivisions; revises period after which failure of certain entities to make final disposition of claim shall be deemed final denial of claim for certain purposes; revises statute of limitations for tort claims against state or agencies or subdivisions & exceptions thereto. Effective Date: October 1, 2026

Current Committee of Reference: No Current Committee

HB 0149 **Maximum Millage Rates for the 2027-2028 Fiscal Year** by Chamberlin

Maximum Millage Rates for the 2027-2028 Fiscal Year: Provides method for determining the maximum county & school millage rates for fiscal year 2027-2028; provides for future repeal. Effective Date: July 1, 2026

Current Committee of Reference: House Select Committee on Property Taxes

---

HB 0201 **Elimination of Non-school Property Tax for Homesteads** by Steele

Elimination of Non-school Property Tax for Homesteads: Proposes amendment to State Constitution to exempt homestead property from all ad valorem taxation other than school district levies, prohibit counties and municipalities from reducing total funding for law enforcement, and provide an effective date.

Current Committee of Reference: House Ways & Means Committee

HB 0203 **Phased Out Elimination of Non-school Property Tax for Homesteads** by Miller

Phased Out Elimination of Non-school Property Tax for Homesteads: Proposes amendment to State Constitution to increase the exemption for homestead property from all ad valorem taxation other than school district levies annually for 10 years by a certain amount, to make homestead property exempt from all ad valorem taxation other than school district levies beginning in a specified year, to prohibit counties and municipalities from reducing total funding for law enforcement, and provide an effective date.

Current Committee of Reference: House State Affairs Committee

---

HB 0205 **Elimination of Non-School Property Tax for Homesteads for Persons Age 65 or Older** by Porras

Elimination of Non-School Property Tax for Homesteads for Persons Age 65 or Older: Proposes amendment to State Constitution to exempt homestead property from all levies other than school district levies for persons who have attained age 65, prohibit counties and municipalities from reducing total funding for law enforcement, and provide an effective date.

Current Committee of Reference: House Ways & Means Committee

HB 0207 **Assessed Home Value Homestead Exemption of Non-school Property Tax** by Abbott

Assessed Home Value Homestead Exemption of Non-school Property Tax: Proposes amendment to State Constitution to add a homestead exemption for levies other than school levies equal to 25 percent of the remaining assessed value after applying existing exemptions, provide construction, prohibit counties and municipalities from reducing total funding for law enforcement, and provide an effective date.

Current Committee of Reference: House State Affairs Committee

---

SB 0208 **Land Use and Development Regulations** by McClain

Land Use and Development Regulations; Prohibiting local land development regulations from requiring the denial of, or conditioning or delaying the approval of, residential development on the basis of a lack of compatibility under certain circumstances; revising the circumstances under which land development regulations may be applied to a single-family or two-family dwelling; prohibiting local land development regulations from conditioning the approval of an application for certain residential development on the payment of certain fees, charges, or exactions; requiring that a fee or charge imposed by a local government in connection with the review, processing, or inspection of a residential development application meet certain requirements, etc. Effective Date: 7/1/2026

Current Committee of Reference: Senate Judiciary

HB 0209 **Property Insurance Relief Homestead Exemption Non-school Property Tax** by Busatta

Property Insurance Relief Homestead Exemption Non-school Property Tax: Proposes amendment to State Constitution to increase by $200,000 the exemption for homestead property from all ad valorem taxation other than school district levies for homestead properties that have property insurance, to prohibit local governments from reducing total funding for first responders, and to provide an effective date. Effective Date: Not Specified

Current Committee of Reference: No Current Committee

HB 0211 **Accrued Save-Our-Homes Property Tax Benefit for Non-school Property Tax** by Overdorf

Accrued Save-Our-Homes Property Tax Benefit for Non-school Property Tax: Proposes amendment to State Constitution to increase the maximum value of the accrued Save-Our-Homes benefit which may be transferred to a new homestead for all levies other than school district levies, prohibit counties and municipalities from reducing total funding for law enforcement, and provide an effective date.

Current Committee of Reference: House Ways & Means Committee

HB 0213 **Modification of Limitations on Property Assessment Increases** by Griffitts Jr.

Modification of Limitations on Property Assessment Increases: Proposes amendment to State Constitution to modify limitations on assessment increases for both homestead and nonhomestead property, prohibit counties and municipalities from reducing total funding for law enforcement, and provide an effective date.

Current Committee of Reference: House State Affairs Committee

HB 0215 **Ad Valorem Taxation** by Albert

Ad Valorem Taxation: Revises Save-Our-Homes portability benefits available to married persons establishing joint homestead; prohibits increase in prior year’s adopted millage rate from going into effect unless approved by specified vote; authorizes DOR to adopt emergency rules; provides for future expiration. Effective Date: January 1, 2027

Current Committee of Reference: House State Affairs Committee

HB 0217 **Land Use Regulations** by Abbott

Land Use Regulations: Defines "impacted local government"; provides for retroactive application. Effective Date: July 1, 2026

Current Committee of Reference: House Intergovernmental Affairs Subcommittee

SB 0218 **Land Use Regulations** by Gaetz

Land Use Regulations; Defining the term “impacted local government”, etc. Effective Date: July 1, 2026

Current Committee of Reference: Senate Community Affairs

HB 0225 **Consumer Fairness in Utility Rates** by Robinson, F.

Consumer Fairness in Utility Rates: Requires certain municipalities to impose same utility rates, fees, & charges on consumers within its municipal boundaries & boundaries of recipient municipality; prohibits such municipalities from imposing surcharges on consumers within boundaries of recipient municipality unless certain conditions are met; prohibits certain use of such surcharges; requires such municipalities to hold certain public hearings; requires certain municipalities to file specified reports with PSC; requires PSC to review certain consumer disputes & make certain determinations. Effective Date: July 1, 2026

Current Committee of Reference: House Economic Infrastructure Subcommittee

HB 0227 **Eligibility of Leasehold Interests for Homestead Exemptions** by Maney

Eligibility of Leasehold Interests for Homestead Exemptions: Revises circumstances under which persons may be deemed to have legal or beneficial & equitable title to certain property for homestead exemption purposes. Effective Date: upon becoming a law

Current Committee of Reference: House Intergovernmental Affairs Subcommittee

HB 0239 **Standards for Storm Water Systems** by Grow

Standards for Storm Water Systems: Requires storm water systems in counties & municipalities, respectively, to comply with specified DOT standards; provides inspection requirements for such systems; specifies that certain local standards are superseded; provides finding of important state interest. Effective Date: July 1, 2026

Current Committee of Reference: House Intergovernmental Affairs Subcommittee

SB 0240 **Auxiliary Containers** by García

Auxiliary Containers; Preempting the regulation of auxiliary containers to the state; providing exceptions; requiring the Department of Environmental Protection to develop a uniform ordinance for the use and disposition of single-use, nonrecyclable auxiliary containers; prohibiting the sale or distribution of certain single-use auxiliary containers on lands managed by the Division of Recreation and Parks of the Department of Environmental Protection; repealing a provision relating to the regulation of polystyrene products preempted to the Department of Agriculture and Consumer Services, etc. Effective Date: 7/1/2026

Current Committee of Reference: Senate Appropriations Committee on Agriculture, Environment, and General Government

HB 0243 **Electric Bicycles, Scooters, and Motorcycles** by Benarroch

Electric Bicycles, Scooters, and Motorcycles: Requires certain crash reports to include certain information; requires state to maintain certain statistics; prohibits person from operating class 3 electric bicycle without certain license; provides requirements for such operation; prohibits certain persons from operating certain motorcycles; revises requirements for certain learner's driver license education course; requires minimum number of questions in test bank for Class E driver license to cover safe electric bicycle & motorized scooter operation; provides various penalties. Effective Date: July 1, 2027

Current Committee of Reference: House Government Operations Subcommittee

SB 0260 **Removal, Storage, and Cleanup of Electric Vehicles** by Burgess

Removal, Storage, and Cleanup of Electric Vehicles; Requiring counties to establish a daily administration fee for the proper storage of certain electric vehicles; providing a maximum amount for such fees; providing applicability; defining the terms “daily administration fee” and “proper storage”; providing that motor vehicle insurers are not required to pay certain costs, etc. Effective Date: July 1, 2026

Current Committee of Reference: Senate Transportation

HB 0263 **Public Records** by Rizo

Public Records: Provides exemption from public records requirements for personal identifying & location information of current county administrators, deputy county administrators, assistant county administrators, city managers, deputy city managers, & assistant city managers, including names & personal identifying & location information of their spouses & children; provides for future legislative review & repeal; provides for retroactive application; provides statement of public necessity. Effective Date: July 1, 2026

Current Committee of Reference: House Intergovernmental Affairs Subcommittee

HB 0267 **Local Housing Assistance Plans** by Stark

Local Housing Assistance Plans: Authorizes county or eligible municipality to expend certain funds on lot rental assistance for mobile home owners for specified time period; requires counties & eligible municipalities to develop certain strategies in their local housing assistance plans; provides that lot rental assistance is approved home ownership activity for certain purposes; authorizes certain funds to be provided to mobile home owners for rehabilitation & emergency repairs; removes prohibition that only certain percentage of funds may be used for manufactured housing. Effective Date: July 1, 2026
Current Committee of Reference: House Commerce Committee

SB 0270 **Homestead Property Exemption for Persons Age 65 or Older** by Bernard

Homestead Property Exemption for Persons Age 65 or Older; Proposing an amendment to the State Constitution to exempt homestead property from all levies other than school district levies for persons who have attained age 65, prohibit counties and municipalities from reducing total funding for law enforcement, etc.

Current Committee of Reference: Senate Finance and Tax

SB 0272 **Homestead Exemption for Persons 65 and Older** by Bernard

Homestead Exemption for Persons 65 and Older; Expanding the homestead exemption for persons 65 years and older to include a total exemption of homestead property from ad valorem taxation, other than for school district levies, for certain persons whose household income does not exceed a certain amount; authorizing the Department of Revenue to adopt emergency rules, etc. Effective Date: On the effective date of the amendment to the State Constitution proposed by SJR 270 or a similar joint resolution having substantially the same specific intent and purpose, if such amendment to the State Constitution is approved at the next general election or at an earlier special election specifically authorized by law for that purpose

Current Committee of Reference: Senate Finance and Tax

SB 0274 **Homestead Property Tax Benefits for Long-term Owners** by Bernard

Homestead Property Tax Benefits for Long-term Owners; Proposing amendments to the State Constitution to provide that the assessed value of homestead property may not increase after 20 years of ownership and residency, to provide an additional homestead tax exemption equal to 50 percent of the assessed value of property, other than school district levies, for persons who have owned and resided on the property as their permanent residence for 30 years or more, and to provide an effective date, etc.

Current Committee of Reference: Senate Finance and Tax

SB 0276 **Homestead Property Tax Benefits For Long-term Owners And Permanent Residents** by Bernard

Homestead Property Tax Benefits for Long-term Owners and Permanent Residents; Requiring that certain property be assessed at less than just value when the person who owns the property has owned and used the property as his or her permanent residence for a specified timeframe; providing that the assessed value of such property shall be a certain amount and may not be increased under certain circumstances; specifying a homestead exemption for certain long-term owners and residents; authorizing periods of ownership and residency to be aggregated, etc. Effective Date: On the effective date of the amendment to the State Constitution proposed by SJR 274 or a similar joint resolution having substantially the same specific intent and purpose, if such amendment to the State Constitution is approved at the next general election or at an earlier special election specifically authorized by law for that purpose

Current Committee of Reference: Senate Finance and Tax

SB 0278 **Limitation on the Assessed Value of New Homestead Property** by Bernard

Limitation on the Assessed Value of New Homestead Property; Proposing amendments to the State Constitution to limit the assessed value of new homestead property established after a change of ownership which had an assessed value of less than a certain amount to no more than 150 percent of the assessed value of the property for the preceding year for ad valorem taxation purposes and to provide an effective date, etc.

Current Committee of Reference: Senate Finance and Tax

SB 0280 **Assessment of Homestead Property** by Bernard

Assessment of Homestead Property; Limiting the assessed value upon change of ownership of homestead property having a prior assessed value below a certain amount when the person acquiring the property is entitled to a homestead exemption, etc. Effective Date: On the effective date of the amendment to the State Constitution proposed by SJR 278 or a similar joint resolution having substantially the same specific intent and purpose, if such amendment is approved at the next general election or at an earlier special election specifically authorized by law for that purpose

Current Committee of Reference: Senate Finance and Tax

SB 0282 **Limitation on the Assessed Value of Property Owned and Used for Commercial Purposes by Small Businesses** by Bernard

Limitation on the Assessed Value of Property Owned and Used for Commercial Purposes by Small Businesses; Proposing amendments to the State Constitution to limit the assessed value of real property owned and used for commercial purposes by a small business for ad valorem taxation purposes so that such assessed value may not exceed 3 percent or the percentage change in the Consumer Price Index, whichever is lower, and to provide an effective date, etc.

Current Committee of Reference: Senate Finance and Tax

SB 0286 **Assessment of Changes, Additions, or Improvements to Homestead Properties** by Bernard

Assessment of Changes, Additions, or Improvements to Homestead Properties; Revising the manner of assessing the value of changes, additions, or improvements to homestead property, etc. Effective Date: 7/1/2026

Current Committee of Reference: Senate Finance and Tax

SB 0290 **Department of Agriculture and Consumer Services** by Truenow

Department of Agriculture and Consumer Services; Prohibiting counties and municipalities, respectively, from enacting or enforcing any law that restricts or prohibits the use of gasoline-powered farm equipment or gasoline-powered landscape equipment or that distinguishes such equipment from any other equipment under certain circumstances; requiring the Acquisition and Restoration Council to determine whether certain surplused lands are suitable for bona fide agricultural purposes; establishing the Food Animal Veterinary Medicine Loan Repayment Program; revising the Florida Forest Service powers, authority, and duties; authorizing the Forest Service to manage the Welaka Training Center; establishing the Farmers Feeding Florida Program for specified purposes; limiting the number of incorporated state fair associations per county; prohibiting the possession, manufacture, sale, importation, distribution, or use of a signal jamming device, etc. Effective Date: 7/1/2026

Current Committee of Reference: Senate Fiscal Policy

HB 0313 **Housing** by Nix, Jr.

Housing: Requires, rather than authorizing, local governments to adopt, by specified date, ordinance to allow accessory dwelling units in certain areas; requires that such ordinances apply prospectively; prohibits inclusion of certain requirements or prohibitions in such ordinances; removes requirement that application for building permit to construct accessory dwelling unit include certain affidavit; revises

accessory dwelling units that apply toward satisfying certain component of local government's comprehensive plan; prohibits denial of homestead exemption for certain portions of property on specified basis; requires that rented accessory dwelling unit be assessed separately from homestead property & taxed according to its use; authorizes local government to provide density bonus incentive to landowners who make certain real property donations to assist in provision of affordable housing for military families; requires OPPAGA to evaluate efficacy of using mezzanine finance & potential of tiny homes for specified purposes; requires office to consult with certain entities; requires office to submit certain report to Legislature by specified date. Effective Date: July 1, 2026

Current Committee of Reference: House Housing, Agriculture & Tourism Subcommittee

---

HB 0323 **Parking on Public Property** by Steele

Parking on Public Property: Defines "public property" & "publicly owned buildings or facilities"; requires local governments to refund owners of vehicles who pay fees to park on specified public property in certain circumstances; requires local governments to carry over any unused portion of time for benefit of next vehicle owner who pays fee to park on such public property in certain circumstances; prohibits certain vehicles from being towed or issued traffic citation for specified time period after being parked on specified public property; prohibits local governments from allowing private business entities or enterprises to use specified public property for private parking purposes for fee. Effective Date: July 1, 2026

Current Committee of Reference: House Intergovernmental Affairs Subcommittee

---

SB 0332 **Public Meetings** by Bradley

Public Meetings; Providing that specified entities may meet in private with their attorneys to discuss certain claims concerning private property rights; requiring that such meetings be transcribed; providing that such transcripts become public records at specified times, etc. Effective Date: 7/1/2026

Current Committee of Reference: Senate Judiciary

HB 0337 **Food Insecure Areas** by Rayner

Food Insecure Areas: Authorizes local government to enact land development regulations to permit land use for small-footprint grocery store located in food insecure area; authorizes local government to include in its comprehensive plan provision permitting land use for small-footprint grocery store located in food insecure area; authorizes local government to require mandatory reporting of certain information from small-footprint grocery store. Effective Date: July 1, 2026

Current Committee of Reference: House Housing, Agriculture & Tourism Subcommittee

---

HB 0347 **Adoption and Display of Flags by Governmental Entities** by Borrero

Adoption and Display of Flags by Governmental Entities: Prohibits governmental entity from displaying, placing, or causing to be placed certain flags on real property; specifies flags governmental entity may display on such property; provides requirements for governmental entity that displays flag of United States; prohibits local government from adopting certain ordinances or regulations relating to flag of local government; provides that certain ordinances & regulations are void. Effective Date: July 1, 2026

Current Committee of Reference: House Government Operations Subcommittee

---

SB 0356 **Utility Terrain Vehicles** by Wright

Utility Terrain Vehicles; Authorizing the operation of a utility terrain vehicle (UTV) during all hours; authorizing the operation of UTVs on certain roadways; authorizing the Department of Transportation to prohibit the operation of UTVs under certain circumstances; requiring owners or operators of a UTV to comply with certain requirements and regulations, etc. Effective Date: January 1, 2027

Current Committee of Reference: Senate Appropriations Committee on Transportation, Tourism, and Economic Development

SB 0382 **Electric Bicycles, Scooters, And Motorcycles** by Truenow

Electric Bicycles, Scooters, And Motorcycles; Defining the term “electric motorcycle”; providing penalties for knowingly modifying an electric bicycle; prohibiting a person from operating a class 3 electric bicycle without a certain license; requiring a minimum number of questions in the test bank for a Class E driver license to cover safe electric bicycle and motorized scooter operation, etc. Effective Date: 7/1/2027

Current Committee of Reference: Senate Transportation

HB 0399 **Land Use and Development Regulations** by Borrero

Land Use and Development Regulations: Prohibits local governments from adopting certain local land development regulations; establishes requirements for certain local land development regulations that impose fee, charge, or exaction; declares certain local land development regulations null & void; requires OPPAGA to perform study to identify effect of removing Urban Development Boundary or similar boundaries in Miami-Dade County and other counties; requiring OPPAGA to submit specified report to Legislature by specified date. Effective Date: July 1, 2026

Current Committee of Reference: House Intergovernmental Affairs Subcommittee

HB 0425 **Historic Cemeteries Program** by Aristide

Historic Cemeteries Program: Requires local governments to approve applications from historic AfricanAmerican cemeteries to change land use category & zoning district of excess vacant land under certain conditions. Effective Date: July 1, 2026

Current Committee of Reference: House Intergovernmental Affairs Subcommittee

SB 0426 **Adoption and Display of Flags by Governmental Entities** by Yarborough

Adoption and Display of Flags by Governmental Entities; Prohibiting a governmental entity from displaying, placing, or causing to be placed certain flags on real property; providing a penalty; specifying flags a governmental entity may display on such property; prohibiting a local government from adopting certain ordinances or regulations relating to the flag of the local government, etc. Effective Date: 7/1 /2026

Current Committee of Reference: Senate Governmental Oversight and Accountability

HB 0433 **Department of Agriculture and Consumer Services** by Alvarez, D.

Department of Agriculture and Consumer Services: Prohibits counties & municipalities from enacting or enforcing any law that restricts or prohibits use of gasoline-powered farm equipment or gasolinepowered landscape equipment or that distinguishes such equipment from any other equipment; requires Acquisition & Restoration Council to determine whether certain surplused lands are suitable for bona fide agricultural purposes; prohibits local governmental entity from transferring future development rights for surplused lands determined to be suitable for bona fide agricultural purposes; requires DEP, in coordination with DACS, to determine whether state-owned conservation lands are suitable for bona fide agricultural purposes; authorizes DEP to surplus specified state-owned lands determined to be suitable for bona fide agricultural purposes; prohibits person from wearing or displaying item that displays words "concealed weapon permit" or "concealed weapon permit holder" with intent to mislead another to believe that person is authorized to wear or display such item; prohibits possession, manufacture, sale, importation, distribution, or use of signal jamming device. Effective Date: July 1, 2026

Current Committee of Reference: House Commerce Committee

SB 0434 **Assessment of Property Used for Residential Purposes** by Leek

Assessment of Property Used for Residential Purposes; Defining the term “changes or improvements made to improve the property’s resistance to wind damage”; prohibiting the consideration of the increase in just value of a property which is attributable to changes or improvements made to improve the property’s resistance to wind damage in determinations of the assessed value of certain property, etc. Effective Date: July 1, 2026

Current Committee of Reference: Senate Finance and Tax

SB 0450 **Ad Valorem Tax Exemption for Disabled Veterans** by Polsky

Ad Valorem Tax Exemption for Disabled Veterans; Removing a limitation on the value of a tax exemption that a surviving spouse could transfer to a new residence; revising when a specified tax exemption is considered to be granted, etc. Effective Date: July 1, 2026

Current Committee of Reference: Senate Finance and Tax

HB 0455 **Protection of Historic Monuments and Memorials** by Black

Protection of Historic Monuments and Memorials: Preempts all removal, damage to, or destruction of historic Florida monuments & memorials; provides that any existing or future ordinance, regulation, or rule to contrary, & certain actions by elected or appointed local government officials, are void; prohibits local governments from enacting or enforcing specified ordinances, regulations, or rules; provides penalties; requires DOS to withhold certain funding from local government; authorizes local government to temporarily remove & relocate monument or memorial in certain instances; authorizes Division of Historical Resources of DOS to request certain recommendations from Florida Historical Commission & Department of Veterans' Affairs. Effective Date: upon becoming a law

Current Committee of Reference: House Government Operations Subcommittee

HB 0479 **Land and Water Management** by Maggard

Land and Water Management: Prohibits counties & municipalities from adopting laws, regulations, rules, or policies relating to water quality or quantity, pollution control, discharge prevention or removal, or wetlands & preempts such regulation to the state; requires DEP to notify CFO of certain violations; requires CFO to withhold certain funds; repeals provisions relating to land management review teams. Effective Date: July 1, 2026

Current Committee of Reference: House Natural Resources & Disasters Subcommittee

SB 0488 **Department of Highway Safety and Motor Vehicles** by Ávila

Department of Highway Safety and Motor Vehicles; Requiring licensure in lieu of registration of motor carriers operating certain qualified motor vehicles; revising due dates for motor fuel use tax returns submitted by licensed motor carriers; authorizing the department to inspect records necessary to verify the tax returns of motor carriers, motor fuel retail dealers, and motor fuel wholesale distributors; revising the apparent amount of property damage which requires the driver of a vehicle involved in a crash to notify law enforcement of the crash, etc. Effective Date: 7/1/2026

Current Committee of Reference: Senate Transportation

SB 0496 **Protection of Historic Monuments and Memorials** by McClain

Protection of Historic Monuments and Memorials; Citing this act as the “Historic Florida Monuments and Memorials Protection Act”; preempting all removal, damage to, or destruction of historic Florida monuments and memorials; providing that any existing or future ordinance, regulation, or rule to the contrary, and certain actions by elected or appointed local government officials, are void; providing civil penalties for certain officials who engage in certain actions; authorizing a local government to

temporarily remove and relocate a monument or memorial in certain instances provided certain requirements are met, etc. Effective Date: Upon becoming a law

Current Committee of Reference: Senate Governmental Oversight and Accountability

SB 0504 **Code Inspector Body Cameras** by Burgess

Code Inspector Body Cameras; Requiring a governmental entity that permits its code inspectors to wear body cameras to establish certain policies and procedures; requiring such governmental entity to ensure that certain training occurs, to retain certain data in accordance with public records laws, and to perform a periodic review of actual body camera practices; providing that certain provisions relating to the interception of wire, electronic, and oral communications do not apply to body camera recordings made by code inspectors, etc. Effective Date: July 1, 2026

Current Committee of Reference: Senate Community Affairs

SB 0506 **Public Records/Body Camera Recordings Recorded by a Code Inspector** by Burgess

Public Records/Body Camera Recordings Recorded by a Code Inspector; Providing an exemption from public records requirements for body camera recordings recorded by a code inspector under certain circumstances; providing exceptions; requiring a local government to retain body camera recordings for a specified timeframe; providing for future legislative review and repeal of the exemption; providing a statement of public necessity, etc. Effective Date: On the same date that SB 504 or similar legislation takes effect, if such legislation is adopted in the same legislative session or an extension thereof and becomes a law

Current Committee of Reference: Senate Community Affairs

SB 0508 **Landscape Irrigation** by Truenow

Landscape Irrigation; Creating the “Landscape Irrigation Standards and Watering Restrictions Act”; prohibiting a person from taking certain actions regarding a landscape irrigation system unless such person is a licensed irrigation contractor or the property owner; specifying that only a licensed irrigation contractor may connect an irrigation system to a water supply; providing a purpose for landscape irrigation system standards; creating a landscape irrigation watering schedule; providing for the enforcement of the act, etc. Effective Date: July 1, 2026

Current Committee of Reference: Senate Regulated Industries

HB 0509 **Code Inspector Body Cameras** by Partington

Code Inspector Body Cameras: Requires governmental entity that permits its code inspectors to wear body cameras to establish certain policies & procedures; requires such governmental entity to ensure that certain training occurs, to retain certain data in accordance with public records laws, & to perform periodic review of actual body camera practices; provides that certain provisions relating to interception of wire, electronic, & oral communications do not apply to body camera recordings made by code inspectors. Effective Date: July 1, 2026

Current Committee of Reference: House Intergovernmental Affairs Subcommittee

HB 0511 **Pub. Rec./Code Inspector Body Cameras** by Partington

Pub. Rec./Code Inspector Body Cameras: Provides exemption from public records requirements for body camera recordings recorded by code inspector; requires local government to retain body camera recordings for specified timeframe; provides for future legislative review & repeal of exemption; provides statement of public necessity; directs Division of Library & Information Services of DOS to adopt specified retention requirement for certain body camera recordings by specified date. Effective Date: on the same date that HB 509 or similar legislation takes effect

Current Committee of Reference: House Intergovernmental Affairs Subcommittee

HB 0521 **Fines for Violations Detected by Traffic Infraction Detectors** by Yeager

Fines for Violations Detected by Traffic Infraction Detectors: Authorizes county or municipality to issue fine for certain violations detected through use of traffic infraction detector; requires fine to be accompanied by certain photograph or image. Effective Date: July 1, 2026

Current Committee of Reference: House Government Operations Subcommittee

HB 0535 **Candidate Qualifying** by Benarroch

Candidate Qualifying: Requires certain candidates to provide filing officer statement disclosing dual citizenship for nomination & election to federal, state, county, multicounty, district, or judicial office or to district school board. Effective Date: July 1, 2026

Current Committee of Reference: House Government Operations Subcommittee

HB 0543 **Transportation** by McFarland

Transportation: Requires DOT to increase minimum perception reaction time of all steady yellow signals by specified amount of time; requires licensing, rather than registration, of motor carriers & fuel tax decals, rather than identifying devices, for motor carriers; revises various provisions relating to qualified motor vehicles, motor carriers, fuel tax decals, & temporary fuel-use permits; revises reporting periods & due dates for motor fuel use tax returns & requires such returns to be submitted electronically beginning on specified date; requires certain seaports to submit annual report describing measures taken to support commercial space launch industry to chair of Space Florida board of directors beginning on specified date; prohibits certain seaports from converting planned or existing land, facilities, or infrastructure that supports cargo purposes unless specified conditions are met; requires legislative approval for use of state funds for specified projects; authorizes private entity to install automated license plate recognition system for use on certain property; requires motor vehicle to be equipped with exhaust system to prevent excessive or unusual noise; prohibits such system from allowing noise that is audible at specified distance from vehicle; authorizes certain golf carts to be titled & registered for operation on certain roads without inspection by DHSMV; provides requirements for electronic credentialing system; authorizes DHSMV to make direct payments to certain subcontractors under specified conditions; requires DHSMV to implement Next-generation Traffic Signal Modernization Grant Program. Effective Date: July 1, 2026

Current Committee of Reference: House Commerce Committee

SB 0548 **Growth Management** by McClain

Growth Management; Deleting an exception to an applicability provision relating to concurrency; requiring that a demonstrated-need study use plan-based methodology for a certain purpose; revising the voting threshold required for approval of an ordinance increasing an impact fee beyond certain phase-in limitations; prohibiting local governments and school districts from increasing impact fee rates beyond certain phase-in limitations by more than a specified percentage within a certain timeframe, etc. Effective Date: 7/1/2026

Current Committee of Reference: Senate Community Affairs

SB 0550 **Prohibition on Levying Ad Valorem Taxes on Tangible Personal Property** by Bernard

Prohibition on Levying Ad Valorem Taxes on Tangible Personal Property; Proposing amendments to the State Constitution to prohibit levying ad valorem taxes on tangible personal property by counties, school districts, and municipalities and to provide an effective date, etc.

Current Committee of Reference: Senate Finance and Tax

SB 0552 **Prohibition on Levying Ad Valorem Taxes on Tangible Personal Property** by Bernard

Prohibition on Levying Ad Valorem Taxes on Tangible Personal Property; Conforming provisions to proposed amendments made to the State Constitution which prohibit levying ad valorem taxes on tangible personal property by counties, school districts, and municipalities; repealing a provision relating to the property appraiser's assessments and effect of determinations by value adjustment boards; repealing a provision relating to extending the date for filing tangible personal property tax returns; repealing a provision relating to tax returns to show all exemptions and claims, etc. Effective Date: On the effective date of the amendment to the State Constitution proposed by SJR 550 or a similar joint resolution having substantially the same specified intent and purpose, if such amendment to the State Constitution is approved at the next general election or at an earlier special election specifically authorized by law for that purpose

Current Committee of Reference: Senate Finance and Tax

HB 0555 **Local Licensing of Home Caregivers** by Skidmore

Local Licensing of Home Caregivers: Authorizes counties & municipalities to license home caregivers within their jurisdictions. Effective Date: July 1, 2026

Current Committee of Reference: House Health Care Facilities & Systems Subcommittee

---

SB 0558 **Standards for Storm Water Systems** by Burgess

Standards for Storm Water Systems; Requiring storm water systems in counties and municipalities, respectively, to comply with specified Department of Transportation standards; providing inspection requirements for such systems; specifying that certain local standards are superseded, etc. Effective Date: July 1, 2026

Current Committee of Reference: Senate Environment and Natural Resources

---

HB 0575 **Auxiliary Containers** by Weinberger

Auxiliary Containers: Defines "auxiliary container" and "single-use"; removes obsolete provisions; preempting regulation of auxiliary containers to state; provides exceptions; requires DEP to develop uniform ordinance for use and disposition of single-use, nonrecyclable auxiliary containers; provides requirements for development of such ordinance; requires that sale or distribution of single-use plastic auxiliary containers on lands managed by Division of Recreation & Parks of DEP be eliminated to greatest extent possible; prohibits use, sale, or distribution of certain single-use auxiliary containers on such lands; requires department to develop and make available on its website statewide Marine Debris Reduction Plan; provides requirements for such plan; removes s. 500.90, F.S., relating to regulation of polystyrene products preempted to DACS. Effective Date: July 1, 2026

Current Committee of Reference: House Natural Resources & Disasters Subcommittee

---

SB 0576 **Local Government Cyber Security** by Harrell

Local Government Cyber Security; Creating the Local Government Cybersecurity Protection Program; requiring local governments to participate in the program and to apply to the Florida Digital Service to use cybersecurity programs and software; establishing priority for certain counties under the program; requiring the Florida Digital Service through the department to secure and administer federal funds, etc. Effective Date: July 1, 2026

Current Committee of Reference: Senate Governmental Oversight and Accountability

---

SB 0580 **Local Licensing of Home Caregivers** by Harrell

Local Licensing of Home Caregivers; Authorizing counties and municipalities to license home caregivers within their jurisdictions, etc. Effective Date: 7/1/2026

Current Committee of Reference: Senate Health Policy

SB 0588 **Local Government Enforcement Actions** by McClain

Local Government Enforcement Actions; Prohibiting certain enforcement actions by counties, municipalities, and special districts, respectively; defining the term “enforcement action”; requiring counties, municipalities, and special districts, respectively, to establish and maintain rules; authorizing filing of legal action and providing legal remedies in certain circumstances, etc. Effective Date: October 1, 2026

Current Committee of Reference: Senate Community Affairs

HB 0589 **Onsite Sewage Treatment and Disposal System Permits** by Nix, Jr.

Onsite Sewage Treatment and Disposal System Permits: Prohibits municipality or political subdivision of state from requiring owners & builders of certain residences to receive construction permits from DEP as condition of issuing building or plumbing permits; requires such owners & builders to provide certain proof to municipality or political subdivision. Effective Date: upon becoming a law

Current Committee of Reference: House Natural Resources & Disasters Subcommittee

SB 0594 **Local Housing Assistance Plans** by Burton

Local Housing Assistance Plans; Authorizing counties and eligible municipalities to expend certain funds on lot rental assistance for mobile home owners for a specified time period; requiring each county and eligible municipality to include in its local housing assistance plan certain strategies; authorizing counties and eligible municipalities to provide certain funds to mobile home owners for rehabilitation and emergency repairs, etc. Effective Date: July 1, 2026

Current Committee of Reference: Senate Community Affairs

SB 0602 **Watercraft Restrictions Based on Energy Source** by Bernard

Watercraft Restrictions Based on Energy Source; Providing an exception to the prohibition on state agencies, governmental authorities, and local governments restricting the use or sale of watercraft based on the energy source used to power the watercraft if such watercraft is used on certain bodies of water, etc. Effective Date: July 1, 2026

Current Committee of Reference: Senate Environment and Natural Resources

SB 0610 **Residential Swimming Pool Requirements** by Smith

Residential Swimming Pool Requirements; Requiring that swimming pools located on residential real property that is transferred or sold on or after a specified date meet certain pool safety requirements; requiring that swimming pools located on residential real property that is transferred or sold on or after a specified date meet certain pool barrier requirements, etc. Effective Date: 7/1/2026

Current Committee of Reference: Senate Regulated Industries

HB 0611 **Landscape Irrigation** by Cobb

Landscape Irrigation: Prohibits certain actions regarding landscape irrigation systems unless such actions are taken by licensed irrigation contractors or property owners; authorizes local governments or water management districts to adopt certain requirements for property owners who install such systems; provides requirements for permits, plans, equipment & capacity, maintenance, & water schedules relating to such systems; provides fines & penalties; prohibits local governments from adopting or enforcing certain laws, rules, or regulations; authorizes DEP to adopt rules; revises membership of Construction Industry Licensing Board. Effective Date: July 1, 2026

Current Committee of Reference: House Natural Resources & Disasters Subcommittee

SB 0620 **Candidate Qualifying** by Mayfield

Candidate Qualifying; Requiring certain candidates to provide the filing officer a statement disclosing dual citizenship for nomination and election to federal, state, county, multicounty, district, or judicial office or to a district school board, etc. Effective Date: 7/1/2026

Current Committee of Reference: Senate Ethics and Elections

HB 0629 **Regulation of Auxiliary Containers** by Esposito

Regulation of Auxiliary Containers: Preempts regulation of auxiliary containers to state; authorizes rules, regulations, & ordinances restricting use of glass auxiliary containers within boundaries of public beach or state park; authorizes Division of Recreation & Parks to regulate auxiliary containers within state parks. Effective Date: July 1, 2026

Current Committee of Reference: House Natural Resources & Disasters Subcommittee

HB 0635 **Cybersecurity Standards and Liability** by Giallombardo

Cybersecurity Standards and Liability: Authorizes local governments to only adopt specified cybersecurity standards; prohibits DMS from delegating authority to set such standards to local governments; requires vendors to comply with specified cybersecurity standards; defines "vendor"; provides that local government, covered entity, or third-party agent that complies with certain requirements is not liable in connection with cybersecurity incident; requires covered entities & thirdparty agents to implement revised frameworks, standards, laws, or regulations within specified time period.

Current Committee of Reference: House Information Technology Budget & Policy Subcommittee

SB 0650 **Local Business Taxes** by Bernard

Local Business Taxes; Repealing provisions relating to local business taxes; authorizing certain counties to continue to impose a business tax; authorizing such counties to revise the definition of the term “merchant” in a specified manner; prohibiting such counties from revising a specified tax rate, etc. Effective Date: July 1, 2026

Current Committee of Reference: Senate Community Affairs

SB 0654 **Traffic Infraction Enforcement** by DiCeglie

Traffic Infraction Enforcement; Revising the periods during which a county or municipality may enforce school zone speed limits, and the violations for which such enforcement is authorized, through the use of a speed detection system; prohibiting the use of a traffic infraction detector for remote surveillance; requiring district school board authorization and a public hearing process before a school district may place or install, or contract with a vendor to install, operate, and maintain, school bus infraction detection systems; revising the periods for which a county or municipality may authorize a traffic infraction enforcement officer to issue certain uniform traffic citations, etc. Effective Date: 10/1/2026

Current Committee of Reference: Senate Transportation

HB 0675 **Affordable Housing** by Driskell

Affordable Housing: Revises upwards length of time that certain rental units must remain affordable in order to qualify for specified zoning variance; requires certain incentives be used for construction of affordable housing; revises upwards length of time that certain rental units must remain affordable in order to qualify for specified zoning variance; revises downward maximum median income used to

determine eligibility for certain tax incentives; specifies that certain taxes do not apply to first-time homebuyers. Effective Date: July 1, 2026

Current Committee of Reference: House Housing, Agriculture & Tourism Subcommittee

---

SB 0692 **Cybersecurity Standards And Liability** by Leek

Cybersecurity Standards and Liability; Authorizing local governments to only adopt specified cybersecurity standards; prohibiting the Department of Management Services from delegating the authority to set such standards to local governments; providing that a local government, a covered entity, or a third-party agent that complies with certain requirements is not liable in connection with a cybersecurity incident under certain circumstances, etc. Effective Date: Upon becoming a law

Current Committee of Reference: Senate Governmental Oversight and Accountability

---

SB 0698 **Onsite Sewage Treatment and Disposal System Permits** by Martin

Onsite Sewage Treatment and Disposal System Permits; Prohibiting a municipality or political subdivision of the state from requiring owners and builders of certain residences to receive construction permits from the Department of Environmental Protection as a condition of issuing building or plumbing permits; requiring such owners and builders to provide certain proof to the municipality or political subdivision, etc. Effective Date: Except as otherwise expressly provided in this act, this act shall take effect upon becoming a law

Current Committee of Reference: Senate Environment and Natural Resources

---

SB 0718 **Water Management** by McClain

Water Management; Prohibiting counties and municipalities from adopting laws, regulations, rules, or policies relating to water quality or quantity, pollution control, pollutant discharge prevention or removal, or wetlands; preempting such regulation to the state; repealing a provision relating to land management review teams, etc. Effective Date: 7/1/2026

Current Committee of Reference: Senate Environment and Natural Resources

---

SB 0750 **Alternative Plans Review and Building Inspection** by DiCeglie

Alternative Plans Review and Building Inspection; Deleting a provision authorizing a local government to charge an administrative fee when an owner or contractor retains a private provider for purposes of plans review or building inspection services, etc. Effective Date: 7/1/2026

Current Committee of Reference: Senate Community Affairs

SB 0752 **Taxation of First-time Buyers** by DiCeglie

Taxation of First-time Buyers; Specifying that documentary stamp taxes do not apply to deeds, transfers, or conveyances of residential property to first-time homebuyers; defining the term “first-time homebuyer”; specifying that documentary stamp taxes do not apply to certain documents executed by a first-time homebuyer in connection with the purchase of a principal residence, etc. Effective Date: 7/1/2026

Current Committee of Reference: Senate Finance and Tax

SB 0756 **Affordable Housing** by Davis

Affordable Housing; Increasing the length of time that certain rental units must remain affordable in order to qualify for a specified zoning variance; requiring that certain incentives be used for the construction of affordable housing; decreasing the maximum median income used to determine

eligibility for certain tax incentives; specifying that documentary stamp taxes do not apply to deeds, transfers, or conveyances of residential property to first-time homebuyers, etc. Effective Date: 7/1/2026

Current Committee of Reference: Senate Community Affairs

SB 0766 **Waste Management** by Martin

Waste Management; Deleting obsolete provisions that provide legislative findings and require the Department of Environmental Protection to review and update a specified report; preempting the regulation of auxiliary containers to the state; permitting rules, regulations, or ordinances restricting the use of glass auxiliary containers within the boundaries of a public beach; authorizing the Division of Recreation and Parks to regulate auxiliary containers within state parks; specifying that certain local ordinances and restrictions are permitted, etc. Effective Date: July 1, 2026

Current Committee of Reference: Senate Environment and Natural Resources

---

HB 0773 **Municipal Utilities** by Brackett

Municipal Utilities: Authorizes municipality to transfer portion of its public utility earnings to its general fund; requires that such percentages be established or reestablished by local referendum, subject to majority vote; provides exception to percentage restrictions in event of disaster or emergency; authorizes such percentages to be established by passage of resolution, by four-fifths vote; requires such percentages to be repaid to general fund within specified time period; prohibits municipality from transferring portion of its public utility earnings in certain instances; prohibits ability of municipality to receive certain state funds if such prohibited transfer is effected; requires specified disclosure in budget & financial report of municipality. Effective Date: July 1, 2026

Current Committee of Reference: House Economic Infrastructure Subcommittee

---

HB 0803 **Building Permits and Inspections** by Trabulsy

Building Permits and Inspections: Revises provisions relating to building code inspection services provided by private provider & private provider firms, including agreement requirements, permit fees, administrative fees, responsibilities of private providers, permitting & inspection documents & reports, timeframes for issuing permits, authority of local building official, notices of incomplete forms, duly authorized representatives, authority of private providers acting as local building official, emergency inspection services, creation of certain forms, systems of registration, audits, immunity, civil causes of action, posting of permits on specified websites, & adoption of a uniformed permitting system. Effective Date: July 1, 2026

Current Committee of Reference: House Industries & Professional Activities Subcommittee

---

SB 0840 **Land Use Regulations for Local Governments Affected by Natural Disasters** by DiCeglie

Land Use Regulations for Local Governments Affected by Natural Disasters; Prohibiting impacted local governments from enforcing certain moratoriums, requiring the repair or reconstruction of certain improvements to meet certain requirements, or enforcing changes to specified procedures; revising circumstances under which impacted local governments may enforce certain amendments, site plans, development permits, or development orders; deleting provisions related to filing suit against an impacted local government for injunctive relief, etc. Effective Date: 7/1/2026

Current Committee of Reference: Senate Community Affairs

SB 0852 **Food Insecure Areas** by Jones

Food Insecure Areas; Authorizing a local government to enact land development regulations to permit land use for a small-footprint grocery store located in a food insecure area; authorizing a local government to include in its comprehensive plan a provision permitting land use for a small-footprint grocery store located in a food insecure area, etc. Effective Date: July 1, 2026

Current Committee of Reference: Senate Community Affairs

HB 0853 **Mobile Home Park Regulations** by Long

Mobile Home Park Regulations: Authorizes counties & municipalities to adopt & enforce local laws, codes, or ordinances relating to mobile home park lot tenancies; authorizes code enforcement officer to cite certain violations to mobile home park owner or mobile home owner; revises obligations & responsibilities of mobile home park owner; revises obligations & responsibilities of mobile home owner; removes provision that mobile home owner is responsible for certain fines; authorizes unit of local government to adopt & enforce local laws, ordinances, or codes for specified purpose; authorizes unit of local government to adopt & enforce local laws, ordinances, or codes for specified purpose; authorizes unit of local government to bring civil proceeding against mobile home park owner or mobile home lot. Effective Date: July 1, 2026

Current Committee of Reference: House Housing, Agriculture & Tourism Subcommittee

HB 0865 **Local Regulation of Drinking Straws and Stirrers** by Blanco

Local Regulation of Drinking Straws and Stirrers: Prohibits local governmental entities from enacting any rule, regulation, or ordinance for drinking straws or stirrers which does not meet specified requirements; provides requirements for local governmental entities that elect to enact rules, regulations, or ordinances for drinking straws or stirrers. Effective Date: upon becoming a law
Current Committee of Reference: House Natural Resources & Disasters Subcommittee

HB 0903 **Assessed Value of Nonhomestead Property** by Grow

Assessed Value of Nonhomestead Property: Proposes State Constitutional amendment reducing maximum percentage assessed value of nonhomestead properties may increase annually.

Current Committee of Reference: House Ways & Means Committee

SB 0910 **Parking on Public Property** by Mayfield

Parking on Public Property; Defining the terms “public property” and “publicly owned buildings or facilities”; requiring local governments to refund owners of vehicles who pay fees to park on specified public property in certain circumstances; prohibiting certain vehicles from being towed or issued a traffic citation for a specified time period after being parked on specified public property; prohibiting local governments from allowing private business entities or enterprises to use specified public property for private parking purposes for a fee; providing construction, etc. Effective Date: July 1, 2026

Current Committee of Reference: Senate Transportation

HB 0927 **Local Land Planning and Development** by Sapp

Local Land Planning and Development: Requires land development regulation commission to develop model ordinance to guide local governments in enactment of land planning & development program ordinance; requires local governments by date certain to enact land planning & development program ordinance under which local governments may enter into employment agreements with certain private providers to perform specified review services; establishes contract terms & conditions of employment agreements for review services under program ordinance; authorizes civil causes of action for specified relief; requires governing body of county or legal governing body of county, municipality, town, or village to create program, or to update existing program, to expedite process for issuing building permits for residential subdivisions, planned unit developments, or planned communities, or one or more phases of multi-phased community or subdivision, by date certain; authorizes applicant to use specified private provider for land use approvals to expedite application process for any plans necessary to support approval of site plan, preliminary plat, & final plat, or building permits after preliminary plat is approved. Effective Date: July 1, 2026

Current Committee of Reference: No Current Committee

SB 0940 **Municipal Water and Sewer Utility Rates, Fees, and Charges** by McClain

Municipal Water and Sewer Utility Rates, Fees, and Charges; Deleting a limitation on the amount of rates, fees, and charges municipal water and sewer utilities are authorized to impose on consumers for such services outside the boundaries of the municipality; providing for the continuance and phase out of certain bond covenant surcharges; requiring municipalities operating such utilities to submit a specified rate study every 7 years to the Department of Environmental Protection which evaluates certain information, etc. Effective Date: 7/1/2026

Current Committee of Reference: Senate Regulated Industries

SB 0948 **Local Government Land Development Regulations and Orders** by McClain

Local Government Land Development Regulations and Orders; Revising, for counties and municipalities, respectively, the application procedures for development permits and orders; creating the “Florida Starter Homes Act”; prohibiting local governments from adopting land development regulations governing lots on residential real property unless such adoption meets specified requirements; prohibiting local governments from adopting certain land development regulations if a lot on residential real property is connected to a public water system or a public sewer system, etc. Effective Date: 7/1 /2026

Current Committee of Reference: Senate Community Affairs

HB 0957 **Deferred and Unpaid Taxes** by Long

Deferred and Unpaid Taxes: Limits specified tax deferral to properties with just value of $1 million or less; increases minimum value of tax certificate that may be sold at public auction or by electronic sale. Effective Date: July 1, 2026

Current Committee of Reference: No Current Committee

SB 0958 **Local Regulation of Drinking Straws and Stirrers** by Bradley

Local Regulation of Drinking Straws and Stirrers; Prohibiting local governmental entities from enacting any rule, regulation, or ordinance for drinking straws or stirrers which does not meet specified requirements; providing requirements for local governmental entities that elect to enact rules, regulations, or ordinances for drinking straws or stirrers, etc. Effective Date: Upon becoming a law

Current Committee of Reference: Senate Environment and Natural Resources

HB 0967 **Electronic Payments Made to Units of Local Governments** by Buchanan

Electronic Payments Made to Units of Local Governments: Revises legislative intent; requires units of local government to accept certain forms of payments; requires such local governments accept payments online. Effective Date: July 1, 2026

Current Committee of Reference: No Current Committee

SB 0968 **Home Backup Power Systems** by McClain

Home Backup Power Systems; Prohibiting a local government from adopting a technical amendment to the Florida Building Code which requires a permit or any functionally equivalent local review or approval for certain backup power systems; prohibiting a local government that issues building permits from requiring an owner of a single-family dwelling or such owner’s contractor to obtain a building permit to perform work on the single-family lot valued at less than a specified sum; prohibiting a local enforcement agency from requiring a permit or any functionally equivalent local review or approval for

the installation, relocation, replacement, or repair of an eligible residential backup power system; defining the term “backup power system”, etc. Effective Date: July 1, 2026

Current Committee of Reference: Senate Community Affairs

HB 0979 **Infill Redevelopment** by Borrero

Infill Redevelopment: Requires local government to permit development of certain qualifying parcels up to certain density & intensity; requires local government to permit development of qualifying parcel with single-family homes or townhouses; prohibits local government from imposing certain restrictions or requirements on development of certain qualifying parcels; prohibits local government from using subdivision process to restrict development; requires developers of qualifying parcels to establish that certain recreational facilities & areas reserved for recreational use have not been in operation or use for certain timeframe, to pay double parks & recreational facilities impact fees for certain purpose, & to provide certain written notice to certain property owners; requires property owners who receive such written notice to exercise option to purchase certain parcels or portions thereof within specified timeframe or forfeit option. Effective Date: upon becoming a law

Current Committee of Reference: No Current Committee

SB 0998 **Department of Commerce** by Yarborough

Department of Commerce; Repealing provisions relating to the Florida Small Cities Community Development Block Grant Program Act; providing an exemption for certain conveyances of state lands to certain federal agencies which revert to the Board of Trustees of the Internal Improvement Trust Fund if such land is not used for its intended purposes as a military installation buffer or if the military installation closes; requiring employers who are required to use the E-Verify system to verify a new employee’s employment eligibility to maintain an E-Verify case result for each employee which shows that the employee is authorized to work; requiring the department to provide an employer knowingly employing an unauthorized alien with a written determination, etc. Effective Date: July 1, 2026

Current Committee of Reference: Senate Commerce and Tourism

HB 1001 **Official Actions of Local Governments** by Black

Official Actions of Local Governments: Prohibits counties & municipalities, respectively, from funding or promoting or taking official action as it relates to diversity, equity, & inclusion; prohibits counties & municipalities from expending funds for diversity, equity, & inclusion offices or for diversity, equity, & inclusion officers; provides that county commissioner, member of governing body of municipality, or any other county or municipal official acting in official capacity who violates certain provisions commits misfeasance or malfeasance in office; authorizes cause of action against counties & municipalities; authorizes court to enter judgment awarding certain relief, damages, & costs; requires potential recipients of county or municipal contracts or grants to make certain certification to county or municipality before being awarded such contract or grant. Effective Date: January 1, 2027

Current Committee of Reference: No Current Committee

HB 1007 **Hyperscale Data Centers** by Griffitts Jr.

Hyperscale Data Centers: Provides that hyperscale data centers are prohibited use on or after date certain for specified land use categories in local in comprehensive plans & agricultural zoning districts within unincorporated areas; prohibits utilities, in fixing rates for hyperscale data centers, from collecting certain impact fees; requires permit applications for consumptive use of water relating to hyperscale data centers to contain specified disclosure; prohibits construction & operation of hyperscale data centers on specified lands & water on or after date certain; provides for hearing requirement before construction & operation of hyperscale data centers; requires governing body of local government that approves construction & operation of hyperscale data center to request, in concurrence with specified board, approval; provides for concurrence hearing requirements; prohibits construction of hyperscale data center if board does not approve concurrence request at such hearing. Effective Date: July 1, 2026

Current Committee of Reference: No Current Committee

SB 1014 **Provision of Municipal Utility Service to Owners Outside the Municipal Limits** by Mayfield

Provision of Municipal Utility Service to Owners Outside the Municipal Limits; Prohibiting a municipal utility from declining to extend service to properties outside its corporate limits under certain circumstances; requiring a municipal utility to expand its service to an owner who makes such a request under certain circumstances; requiring the municipal utility to make a determination within a specified timeframe and provide such determination to the owner in writing; requiring the municipal utility to provide the owner with specified information and to connect properties in a timely manner, etc. Effective Date: 7/1/2026

Current Committee of Reference: Senate Regulated Industries

SB 1018 **Deferred Compensation Plans for Public Employees** by Truenow

Deferred Compensation Plans for Public Employees; Citing this act as the "Deferred Compensation Automatic Enrollment Act'; authorizing the inclusion of an automatic enrollment arrangement in a government employee's deferred compensation plan; requiring that the automatic enrollment arrangement provide employees the ability to make certain elections regarding contributions; requiring that the plan provide for a default investment into which contributions must be placed under a specified circumstance; authorizing counties, municipalities, political subdivisions, and constitutional county officers to adopt automatic enrollment arrangements for specified deferred compensation programs, etc. Effective Date: 7/1/2026

Current Committee of Reference: Senate Governmental Oversight and Accountability

HB 1049 **Building Permit Requirements** by Esposito

Building Permit Requirements: Prohibits local government from adopting certain technical amendments to Florida Building Code; prohibits local government from requiring building permit for work valued at specified amount that is performed on single-family dwelling; authorizes local government to require building permit for certain work regardless of value of work; requires contractor to maintain certain written records; prohibits local enforcement agency from requiring building permit for specified work on backup power system that is installed by certain persons or entities; provides exception; prohibits local governments from adopting or enforcing certain ordinances, rules, or other measures; authorizes local enforcement agency to conduct certain inspections, either in person or virtually; authorizes owner or owner's contractor to use private provider for certain inspections; provides requirements for private provider; requires local enforcement agency to provide certain persons written notice of correction; authorizes stop-work order only under specific circumstances; requires local enforcement agency to offer owner or owner's contractor reinspection date within certain time period; provides that private provider inspection report constitutes acceptance; prohibits local enforcement agency from withholding or revoking certificate of occupancy based solely on failed inspection report. Effective Date: July 1, 2026

Current Committee of Reference: No Current Committee

HB 1085 **Local Government Cyber Security** by Miller

Local Government Cyber Security: Creates Florida State University Cybersecurity Protection Program; provides purpose of program; requires local governments to participate in program & to submit requests to Florida State University to use cybersecurity programs & software developed by university; establishes priority for certain counties under program; authorizes Florida State University to apply for & accept certain funds or grants. Effective Date: July 1, 2026

Current Committee of Reference: No Current Committee

HB 1089 **Waste Facilities** by Bartleman

Waste Facilities: Prohibits local government from issuing construction permit for certain solid waste disposal & waste-to-energy facilities under certain circumstances. Effective Date: July 1, 2026

Current Committee of Reference: No Current Committee

HB 1125 **Local Government Salaries and Benefits** by Giallombardo

Local Government Salaries and Benefits: Revises requirements for board of county commissioners salary formula to apply to noncharter counties; provides for determination of salaries of members of boards of county commissioners of certain counties; requires referendum for board of county commissioners to increase salary, retirement benefits, or other compensation paid to its members; requires referendum election costs to be paid by county; requires referendum for governing body of municipality to increase salary, retirement benefits, or other compensation paid to its members; requires referendum election costs to be paid by municipality; requires referendum for governing body of special district to increase salary, retirement benefits, or other compensation paid to its members; requires referendum election costs to be paid by special district. Effective Date: October 1, 2026

Current Committee of Reference: No Current Committee

SB 1134 **Official Actions of Local Governments** by Yarborough

Official Actions of Local Governments; Prohibiting counties and municipalities, respectively, from funding or promoting or taking official action as it relates to diversity, equity, and inclusion; providing that certain ordinances, resolutions, rules, regulations, programs, and policies are void; providing that a county commissioner, a member of the governing body of a municipality, or any other county or municipal official acting in an official capacity who violates certain provisions commits misfeasance or malfeasance in office, etc. Effective Date: January 1, 2027

Current Committee of Reference: No Current Committee

SB 1138 **Qualified Contractors** by Massullo, Jr.

Qualified Contractors; Requiring the governing body of a local government, by a specified date, to create a program that authorizes an applicant to use a qualified contractor to conduct preapplication review of an application; requiring the development services office of a local government to establish a registry of a specified number of qualified contractors to be used to conduct preapplication reviews; prohibiting a local government from enforcing any additional criteria for qualified contractors beyond what is authorized by the act; prohibiting local governments from creating or establishing additional regulations for the approval of a final plat, etc. Effective Date: 7/1/2026

Current Committee of Reference: No Current Committee

HB 1139 **Impact Fees** by Gentry

Impact Fees: Defines "plan-based methodology"; revises provisions relating to intergovernmental coordination elements in comprehensive plans; requires interlocal agreements that coordinate mitigation of their respective transportation capacity impacts to use certain methodology; revises criteria local government, school district, or special district must meet to increase impact fee rates; defines "extraordinary circumstances." Effective Date: July 1, 2026

Current Committee of Reference: No Current Committee

HB 1143 **Local Government Land Development Regulations and Orders** by Nix, Jr.

Local Government Land Development Regulations and Orders: Revises, for counties & municipalities, respectively, application procedures for development permits & orders; prohibits local governments from adopting land development regulations governing lots on residential real property unless such adoption meets specified requirements; prohibits local governments from adopting certain land development regulations if lot on residential real property is connected to public water system or public sewer system;

requires that land development regulations adopted by local government allow lots to front or abut shared space instead of public right-of-way; establishes cause of action; authorizes award of specified remedies; provides for waiver of sovereign immunity. Effective Date: July 1, 2026

Current Committee of Reference: No Current Committee

HB 1151 **Health Care Autonomy** by Driskell

Health Care Autonomy: Establishes fundamental right to reproductive health care; provides that every individual has fundamental right to make autonomous decisions about individual's own reproductive health; provides that individuals who become pregnant have fundamental right to make certain decisions in exercise of such right; prohibits state from denying or interfering with individual's right to access reproductive health care; prohibits state & local law enforcement agencies & officials from harassing or discriminating against individual for providing or obtaining reproductive health care or assisting another person in doing so; prohibits such state & local entities from penalizing, prosecuting, or otherwise taking adverse action against individual for exercising specified rights, or against individual for assisting another in exercising such rights; provides individuals with immunity from civil liability for exercising specified rights or aiding or assisting another in exercising such rights; provides that fertilized egg, embryo, or fetus does not have independent rights under laws of this state; prohibits local units of government from regulating individual's ability to exercise right to reproductive health care in manner more restrictive than that set forth in specified provisions. Effective Date: effect upon becoming a law

Current Committee of Reference: No Current Committee

HB 1183 **Transportation Infrastructure Land Development Regulations** by Cross

Transportation Infrastructure Land Development Regulations: Requires governing body of county or municipality to adopt ordinance, & governing body of special district to adopt resolution, establishing specified transit-oriented development (TOD) zones & rural livable urban village (LUV) areas; requires local government to zone for mixed use, & authorize certain commercial uses for, lots within TOD zones & rural LUV areas; prohibits local government from imposing certain building regulations in specified TOD zones & rural LUV areas; prohibits reduction or elimination of TOD zones after establishment; prohibits local government from imposing certain regulations for lots that contain historic property; provides private cause of action; authorizes award of specified relief; provides that prevailing plaintiff is entitled to attorney fees & costs; provides waiver of sovereign immunity. Effective Date: July 1, 2026

Current Committee of Reference: No Current Committee

SB 1196 **Waste Facilities** by Sharief

Waste Facilities; Prohibiting a local government or the Department of Environmental Protection, respectively, from issuing a construction permit for certain solid waste disposal and waste-to-energy facilities under certain circumstances, etc. Effective Date: 7/1/2026

Current Committee of Reference: No Current Committee

HB 1217 **Prohibited Governmental Policies Regulating Greenhouse Gas Emissions** by Snyder

Prohibited Governmental Policies Regulating Greenhouse Gas Emissions: Prohibits governmental entities from adopting certain net zero policies; prohibits governmental entities from using government funds in any manner that supports, implements, or advances certain net zero policies; prohibits governmental entities from imposing tax, fee, penalty, charge, offset, or assessment to advance certain net zero policies; requires each governmental entity to annually submit to Department of Revenue certain affidavit; prohibits governmental entities from implementing, administering, or enforcing certain programs. Effective Date: July 1, 2026

Current Committee of Reference: No Current Committee

SB 1220 **Transportation** by Massullo, Jr.

Transportation; Providing requirements for an infrastructure development and improvement component included in a port's strategic plan; requiring the Department of Transportation to coordinate with the Department of Commerce, specified ports, and the Federal Government for a certain purpose; revising duties of the Department of Transportation relating to airport systems in this state; providing that the department serves as the primary point of contact for statewide topographic aerial LiDAR procurement and certain cost sharing, etc. Effective Date: July 1, 2026

Current Committee of Reference: No Current Committee

HB 1227 **Preemption to the State** by Oliver

Preemption to the State: Prohibits counties, municipalities, & special districts, respectively, from substantially burdening free exercise of religion by adopting or enforcing certain ordinances, regulations, resolutions, rules, or other policies; prohibits local enforcement agency from denying issuance of certificate of occupancy to owner of residential or commercial property based on noncompliance with Florida-friendly landscaping ordinances; prohibits local enforcement agency from denying issuance of building permit for alteration, modification, or repair of single-family residential structure; prohibits local enforcement agency from requiring building permit for construction of playground equipment or fence on certain property; prohibits local governments from adopting or enforcing certain ordinances, regulations, resolutions, rules, charter provisions, or other policies or from taking any action to license or otherwise regulate mutual benefit corporations; revises criteria for business to be considered home-based business as it relates to local government regulation of parking. Effective Date: upon becoming a law

Current Committee of Reference: No Current Committee

SB 1234 **Building Permits and Inspections** by DiCeglie

Building Permits and Inspections; Providing for expiration of certain building permits issued by a county; requiring the Florida Building Commission to modify the Florida Building Code to exempt from building permit requirements the installation of certain walls or barriers; providing for expiration of certain building permits issued by a local government; revising definitions and defining terms; requiring certain services to be subject to an agreement, rather than a written contract, etc. Effective Date: July 1, 2026

Current Committee of Reference: No Current Committee

HB 1251 **Expenditure of Public Funds by Local Governments** by Shoaf

Expenditure of Public Funds by Local Governments: Prohibits local governments from expending public funds for specified purposes; prohibits acceptance of public funds from local governments for lobbying; authorizes filing of complaints with Commission on Ethics alleging violations; requires commission to investigate & provide report of its findings to certain entities; requires commission to adopt rules. Effective Date: July 1, 2026

Current Committee of Reference: No Current Committee

HB 1275 **Prohibition on Levying Ad Valorem Taxes on Tangible Personal Property** by LaMarca

Prohibition on Levying Ad Valorem Taxes on Tangible Personal Property: Proposes amendment to State Constitution to prohibit levying of ad valorem taxes on tangible personal property by certain entities.

Current Committee of Reference: No Current Committee

HB 1277 **Prohibition on Levying Ad Valorem Taxes on Tangible Personal Property** by LaMarca

Prohibition on Levying Ad Valorem Taxes on Tangible Personal Property: Conforms provisions to proposed amendments made to State Constitution which prohibit levying ad valorem taxes on tangible personal property by counties, school districts, & municipalities; removes provisions relating to property

appraiser's assessments & effect of determinations by value adjustment boards; repeals provisions relating to extending date for filing tangible personal property tax returns; repeals provisions relating to erroneous returns & estimates of assessment when no return is filed; repeals provisions relating to tax returns to show all exemptions & claims; repeals provisions relating to exemption of renewable energy source devices; repeals provisions relating to exemption for tangible personal property; repeals provisions relating to uncollectible personal property taxes & correction of tax roll; repeals provisions relating to attachment of tangible personal property in case of removal; provides transitional provision. Effective Date: on the effective date of the amendment to the State Constitution proposed by HJR 1275 or a similar joint resolution having substantially the same specified intent and purpose

Current Committee of Reference: No Current Committee

HB 1303 **Department of Financial Services** by Miller

Department of Financial Services: Establishes Florida Agency for Fiscal Oversight within DFS; provides purpose & duties of agency; requires agency to conduct audit of certain local governments; authorizes agency to request certain information; provides penalties for noncompliance with such request; removes requirement that specified hotline be operated for certain amount of time each day; removes requirement that hotline be advertised in specified manner; requires specified employees to take certain training annually; requires first training be completed by specified deadline; requires certain employees who report information to Florida Agency for Fiscal Accountability be afforded same protection as whistle-blowers; prohibits local governments from executing certain documents with specified provisions; provides that such contracts are void; requires local governments submit certain report to DFS; requires counties to use certain contract tracking system. Effective Date: July 1, 2026

Current Committee of Reference: No Current Committee

HB 1307 **Unauthorized Aliens** by Jacques

Unauthorized Aliens: Prohibits unauthorized aliens from receiving certain licensing or certification, financial assistance, & claim reimbursement; requires certain procedures, instruction, & testing to be conducted in English; prohibits alternate language accommodations; requires employers & licensees to verify employment eligibility & citizenship status, respectively, before taking certain actions; provides civil cause of action; provides penalties; authorizes certain complains; requires Office of Financial Regulation to conduct random audits; creates rebuttable presumption against unauthorized out-of-state drivers; provides exemptions & standard of proof; provides requirements for law enforcement officers, DHSMV, insurers, & OIR; provides administrative penalties; authorizes private cause of action; prohibits certain financial institutions from accepting certain forms of personal identification. Effective Date: upon becoming a law

Current Committee of Reference: No Current Committee

SB 1342 **Transportation Infrastructure Land Development Regulations** by Rouson

Transportation Infrastructure Land Development Regulations; Citing this act as the “Transit-Oriented Development Act” or the “TOD Act”; requiring the governing body of a county or municipality to adopt an ordinance, and the governing body of a special district to adopt a resolution, establishing specified transit-oriented development (TOD) zones and rural livable urban village (LUV) areas by a certain date; prohibiting a local government from imposing certain building regulations in specified TOD zones and rural LUV areas; prohibiting the reduction or elimination of TOD zones after establishment; prohibiting a local government from imposing certain regulations for lots that contain historic property; providing a waiver of sovereign immunity, etc. Effective Date: 7/1/2026 **Current Committee of Reference:** No Current Committee

---

SB 1366 **Claims Against the Government** by Brodeur

Claims Against the Government; Increasing the statutory limits on the liability of the state and its agencies and subdivisions for tort claims; requiring the Department of Financial Services, beginning on

a specified date and every 5 years thereafter, to adjust the limitations of liability for claims; limiting attorney fees based on the amount of funds recovered; authorizing the Legislature to limit attorney fee awards in a claim bill or reserve any portion of the proceeds of a claim bill to the claimant, etc. Effective Date: 10/1/2026

Current Committee of Reference: No Current Committee

SB 1380 **Unauthorized Aliens** by Martin

Unauthorized Aliens; Prohibiting the Department of Financial Services from issuing a license or certification to unauthorized aliens; authorizing a county to require a borrower to provide proof of being lawfully present in the United States; authorizing the Division of Risk Management to approve or deny claims relating to a minor who is an unauthorized alien; requiring that certain procedures, instruction, and testing be conducted in English; prohibiting certain entities and corporations from providing down payment assistance to unauthorized aliens, etc. Effective Date: Upon becoming a law

Current Committee of Reference: No Current Committee

SB 1420 **Local Utility Revenues** by DiCeglie

Local Utility Revenues; Prohibiting counties and municipalities, respectively, from transferring for specified purposes revenues collected from providing utility services; requiring revenue surpluses to be returned to the ratepayers; requiring county and municipal utilities, respectively, to develop budget forecasts and strategies that meet certain requirements; prohibiting counties and municipalities, respectively, from charging a higher rate or adding a surcharge to certain customers, etc. Effective Date: 7/1/2026

Current Committee of Reference: No Current Committee

SB 1444 **Preemption to the State** by Martin

Preemption to the State; Providing for preemption of all matters relating to the regulation of religious services and gatherings; prohibiting counties, municipalities, and special districts, respectively, from substantially burdening the free exercise of religion by adopting or enforcing certain ordinances, regulations, resolutions, rules, or other policies; prohibiting a local enforcement agency from denying the issuance of a certificate of occupancy to an owner of residential or commercial structure based on noncompliance with Florida-friendly landscaping ordinances in certain circumstances; waiving sovereign immunity in accordance with specified laws, etc. Effective Date: Upon becoming a law

Current Committee of Reference: No Current Committee

SB 1506 **Civil Litigation** by Yarborough

Civil Litigation; Revising the criteria that the court must consider in determining whether an award of money damages is excessive or inadequate, etc. Effective Date: 7/1/2026

Current Committee of Reference: No Current Committee

Generated 1/9/2026 07:00 AM

II. 2026.01.16 - The Village of Palmetto Bay Weekly Bill Report

The Village of Palmetto Bay
Ordered by Bill Number

HB 0037 **Removal, Storage, and Cleanup of Electric Vehicles** by Nix, Jr.

Removal, Storage, and Cleanup of Electric Vehicles: Requires counties to establish daily administration fee for proper storage of certain electric vehicles; authorizes municipalities to establish daily administration fee for proper storage of certain electric vehicles; provides maximum amount for such fees; defines "daily administration fee" & "proper storage"; provides that motor vehicle insurers are not required to pay certain costs; provides that reasonable fee for service includes any daily administration fee. Effective Date: July 1, 2026

Current Committee of Reference: House State Affairs Committee

---

SB 0044 **Electronic Payment of Public Records Fees** by Rouson

Electronic Payment of Public Records Fees; Requiring an agency subject to ch. 119, F.S., to provide an electronic option for payment of fees associated with a public records request, etc. Effective Date: July 1, 2026

Current Committee of Reference: Senate Governmental Oversight and Accountability

---

SB 0048 **Housing** by Gaetz

Housing; Authorizing a landlord to accept reusable tenant screening reports and require a specified statement; defining the term “primary dwelling unit”; requiring, rather than authorizing, local governments to adopt, by a specified date, an ordinance to allow accessory dwelling units in certain areas; requiring the Office of Program Policy Analysis and Government Accountability to evaluate the efficacy of using mezzanine finance and the potential of tiny homes for specified purposes, etc. Effective Date: 7/1/2026

Current Committee of Reference: Senate Appropriations Committee on Transportation, Tourism, and Economic Development

---

HB 0067 **Reduction of Annual Assessment Increases for Homestead Property** by Holcomb

Reduction of Annual Assessment Increases for Homestead Property: Proposes State Constitutional amendment reducing maximum amount that homestead property’s assessed value may increase annually.

Current Committee of Reference: No Current Committee

HB 0071 **Distribution of Funds to Homestead Property Owners** by Holcomb

Distribution of Funds to Homestead Property Owners: Creates Homestead Property Tax Relief Program within DFS; defines “eligible homesteader”; requires CFO to annually issue warrants of specified amount to certain homestead property owners beginning & ending on specified dates; requires CFO to work with county property appraisers for specified purpose; provides future repeal. Effective Date: July 1, 2026

Current Committee of Reference: No Current Committee

SB 0092 **Employee Protections** by Gaetz

Employee Protections; Providing that public officers, public employees, and local government attorneys commit a breach of the public trust when they initiate adverse personnel actions against specified agency employees or independent contractors under certain circumstances; prohibiting agencies and independent contractors from taking specified actions against employees or certain persons for disclosing certain information to the Commission on Ethics; requiring that information disclosed include specified violations or alleged violations; providing that specified provisions protect employees and persons who submit written complaints to the commission or provide information to an investigator during an investigation of a complaint or referral, etc. Effective Date: 1/1/2027

Current Committee of Reference: Senate Rules

HB 0101 **Utility Terrain Vehicles** by Gentry

Utility Terrain Vehicles: Authorizes utility terrain vehicle (UTV) to be operated during all hours; authorizes operation of UTVs on certain roadways & on certain parts of State Highway System; authorizes DOT to prohibit use of UTVs under certain circumstances; authorizes persons possessing certain licenses to operate UTV; requires owners or operators of UTV to comply with certain requirements & regulations; authorizes county or municipality to restrict operation of UTVs under certain circumstances; provides civil penalties; requires DHSMV to issue license plate to owner or lessee of vehicle registered as UTV upon payment of certain taxes & fees; requires that license plates for UTVs comply with specified provisions. Effective Date: January 1, 2027

Current Committee of Reference: House Government Operations Subcommittee

HB 0103 **Local Business Taxes** by Botana

Local Business Taxes: Repeals provisions related to local business taxes & authorizes certain municipalities to continue to impose business taxes. Effective Date: July 1, 2026

Current Committee of Reference: House Intergovernmental Affairs Subcommittee

HB 0105 **Local Government Enforcement Actions** by Brackett

Local Government Enforcement Actions: Prohibits certain enforcement actions by counties, municipalities, & special districts; authorizes persons or business entities subject to such actions to submit request for review; requires counties, municipalities, & special districts to review such actions & respond within specified time period; authorizes filing of legal action & provides legal remedies; provides for certain protections from retaliation; provides for preemption. Effective Date: October 1, 2026

Current Committee of Reference: House Civil Justice & Claims Subcommittee

SB 0118 **Assessments Levied on Recreational Vehicle Parks** by Truenow

Assessments Levied on Recreational Vehicle Parks; Providing that certain special assessments on recreational vehicle parks levied by counties, municipalities, and special districts, respectively, may not be levied against a certain portion of a recreational vehicle parking space or campsite; requiring counties, municipalities, and special districts, respectively, to consider a recreational vehicle park's occupancy rates for a certain purpose, etc. Effective Date: Upon becoming a law

Current Committee of Reference: Senate Finance and Tax

SB 0122 **Local Business Taxes** by Truenow

Local Business Taxes; Repealing provisions relating to local business taxes; authorizing certain municipalities to continue to impose a business tax; authorizing such municipalities to revise the definition of the term "merchant" in a specified manner, etc. Effective Date: 7/1/2026

Current Committee of Reference: Senate Finance and Tax

HB 0139 **Adverse Personnel Actions and Ethics Complaints** by Maney

Adverse Personnel Actions and Ethics Complaints: Prohibits agencies & independent contractors from taking specified actions against employees for disclosing certain information to Commission on Ethics; requires that information disclosed include specified violations or alleged violations; requires disclosure of specified information to commission; provides that specified provisions protect employees & persons who submit written complaints to commission or provide information to investigator during investigation

of complaint; authorizes certain employees or applicants for employment to file complaints in accordance with specified provisions; authorizes such employees or applicants to pursue specified administrative remedy or civil action within specified timeframe; authorizes local public employees to file complaint with appropriate local governmental authority; specifies requirements for administrative procedures created by local governmental authorities; authorizes such employee to bring civil actions in court of competent jurisdiction under specified conditions; requires specified relief; provides that it is affirmative defense to certain actions that adverse personnel action was predicated on grounds other than exercising of certain protected rights; requires commission to deliver complaints & any amendment thereto to agency conducting certain investigation, upon agency's written request; requires commission to deliver complaints & any amendment thereto to certain persons upon notarized written request. Effective Date: July 1, 2026

Current Committee of Reference: House Government Operations Subcommittee

---

HB 0145 **Suits Against the Government** by McFarland

Suits Against the Government: Increases statutory limits on liability for tort claims against state & its agencies & subdivisions; authorizes subdivision of state to settle claim in excess of statutory limit without legislative action regardless of insurance coverage limits; prohibits insurance policy from conditioning benefits on enactment of claim bill; specifies that limitations in effect on date claim accrues apply to that claim; revises period within which certain claims must be presented; revises exceptions relating to instituting tort claims against state or agencies or subdivisions; revises period after which failure of certain entities to make final disposition of claim shall be deemed final denial of claim for certain purposes; revises statute of limitations for tort claims against state or agencies or subdivisions & exceptions thereto. Effective Date: October 1, 2026

Current Committee of Reference: No Current Committee

HB 0149 **Maximum Millage Rates for the 2027-2028 Fiscal Year** by Chamberlin

Maximum Millage Rates for the 2027-2028 Fiscal Year: Provides method for determining the maximum county & school millage rates for fiscal year 2027-2028; provides for future repeal. Effective Date: July 1, 2026

Current Committee of Reference: House Select Committee on Property Taxes

---

HB 0201 **Elimination of Non-school Property Tax for Homesteads** by Steele

Elimination of Non-school Property Tax for Homesteads: Proposes amendment to State Constitution to exempt homestead property from all ad valorem taxation other than school district levies, prohibit counties and municipalities from reducing total funding for law enforcement, and provide an effective date.

Current Committee of Reference: House Ways & Means Committee

HB 0203 **Phased Out Elimination of Non-school Property Tax for Homesteads** by Miller

Phased Out Elimination of Non-school Property Tax for Homesteads: Proposes amendment to State Constitution to increase exemption for homestead property from all ad valorem taxation other than school district levies annually for 10 years by a certain amount, to make homestead property exempt from all ad valorem taxation other than school district levies beginning in a specified year, to prohibit local governments from reducing total funding for services provided by law enforcement, firefighters, and other first responders, and provide an effective date. Effective Date: January 1, 2027

Current Committee of Reference: House State Affairs Committee

---

HB 0205 **Elimination of Non-School Property Tax for Homesteads for Persons Age 65 or Older** by Porras

Elimination of Non-School Property Tax for Homesteads for Persons Age 65 or Older: Proposes amendment to State Constitution to exempt homestead property from all levies other than school district levies for persons who have attained age 65, prohibit counties and municipalities from reducing total funding for law enforcement, and provide an effective date.

Current Committee of Reference: House Ways & Means Committee

HB 0207 **Assessed Home Value Homestead Exemption of Non-school Property Tax** by Abbott

Assessed Home Value Homestead Exemption of Non-school Property Tax: Proposes amendment to State Constitution to add a homestead exemption for levies other than school levies equal to 25 percent of the remaining assessed value after applying existing exemptions, provide construction, prohibit counties and municipalities from reducing total funding for law enforcement, and provide an effective date.

Current Committee of Reference: House State Affairs Committee

---

SB 0208 **Land Use and Development Regulations** by McClain

Land Use and Development Regulations; Requiring that the amount of certain application fees reasonably relate to certain costs; requiring that local government comprehensive plans and land development regulations include factors for assessing the compatibility of certain residential uses; prohibiting a local government from denying certain applications on compatibility grounds if the applicant has proposed certain measures; requiring that the denial of an application specify certain information; providing that a local government's approval of an application may include certain requirements or conditions, etc. Effective Date: 7/1/2026

Current Committee of Reference: Senate Judiciary

HB 0209 **Property Insurance Relief Homestead Exemption Non-school Property Tax** by Busatta

Property Insurance Relief Homestead Exemption Non-school Property Tax: Proposes amendment to State Constitution to increase by $200,000 the exemption for homestead property from all ad valorem taxation other than school district levies for homestead properties that have property insurance, to prohibit local governments from reducing total funding for first responders, and to provide an effective date. Effective Date: Not Specified

Current Committee of Reference: No Current Committee

HB 0211 **Accrued Save-Our-Homes Property Tax Benefit for Non-school Property Tax** by Overdorf

Accrued Save-Our-Homes Property Tax Benefit for Non-school Property Tax: Proposes amendment to State Constitution to increase the maximum value of the accrued Save-Our-Homes benefit which may be transferred to a new homestead for all levies other than school district levies, prohibit counties and municipalities from reducing total funding for law enforcement, and provide an effective date.

Current Committee of Reference: House Ways & Means Committee

HB 0213 **Modification of Limitations on Property Assessment Increases** by Griffitts Jr.

Modification of Limitations on Property Assessment Increases: Proposes amendment to State Constitution to modify limitations on assessment increases for both homestead and nonhomestead property, prohibit counties and municipalities from reducing total funding for law enforcement, and provide an effective date.

Current Committee of Reference: House State Affairs Committee

---

HB 0215 **Ad Valorem Taxation** by Albert

Ad Valorem Taxation: Revises Save-Our-Homes portability benefits available to married persons establishing joint homestead; prohibits increase in prior year's adopted millage rate from going into effect unless approved by specified vote; authorizes DOR to adopt emergency rules; provides for future expiration. Effective Date: January 1, 2027

Current Committee of Reference: House State Affairs Committee

---

HB 0217 **Land Use Regulations** by Abbott

Land Use Regulations: Defines "impacted local government"; provides for retroactive application. Effective Date: July 1, 2026

Current Committee of Reference: House Intergovernmental Affairs Subcommittee

---

SB 0218 **Land Use Regulations** by Gaetz

Land Use Regulations; Defining the term "impacted local government", etc. Effective Date: July 1, 2026

Current Committee of Reference: Senate Community Affairs

HB 0225 **Consumer Fairness in Utility Rates** by Robinson, F.

Consumer Fairness in Utility Rates: Requires certain municipalities to impose same utility rates, fees, & charges on consumers within its municipal boundaries & boundaries of recipient municipality; prohibits such municipalities from imposing surcharges on consumers within boundaries of recipient municipality unless certain conditions are met; prohibits certain use of such surcharges; requires such municipalities to hold certain public hearings; requires certain municipalities to file specified reports with PSC; requires PSC to review certain consumer disputes & make certain determinations. Effective Date: July 1, 2026
Current Committee of Reference: House Economic Infrastructure Subcommittee

---

HB 0227 **Eligibility of Leasehold Interests for Homestead Exemptions** by Maney

Eligibility of Leasehold Interests for Homestead Exemptions: Revises circumstances under which persons may be deemed to have legal or beneficial & equitable title to certain property for homestead exemption purposes. Effective Date: upon becoming a law

Current Committee of Reference: House State Affairs Committee

---

HB 0239 **Standards for Storm Water Systems** by Grow

Standards for Storm Water Systems: Requires storm water systems in counties & municipalities, respectively, to comply with specified DOT standards; provides inspection requirements for such systems; specifies that certain local standards are superseded; provides finding of important state interest. Effective Date: July 1, 2026

Current Committee of Reference: House Intergovernmental Affairs Subcommittee

---

SB 0240 **Auxiliary Containers** by García

Auxiliary Containers; Preempting the regulation of auxiliary containers to the state; providing exceptions; requiring the Department of Environmental Protection to develop a uniform ordinance for the use and disposition of single-use, nonrecyclable auxiliary containers; prohibiting the sale or distribution of certain single-use auxiliary containers on lands managed by the Division of Recreation and Parks of the Department of Environmental Protection; repealing a provision relating to the regulation of polystyrene products preempted to the Department of Agriculture and Consumer Services, etc. Effective Date: 7/1/2026

Current Committee of Reference: Senate Appropriations Committee on Agriculture, Environment, and General Government

HB 0243 **Electric Bicycles, Scooters, and Motorcycles** by Benarroch

Electric Bicycles, Scooters, and Motorcycles: Requires certain crash reports to include certain information; requires state to maintain certain statistics; prohibits person from operating class 3 electric bicycle without certain license; provides requirements for such operation; prohibits certain persons from operating certain motorcycles; revises requirements for certain learner's driver license education course; requires minimum number of questions in test bank for Class E driver license to cover safe electric bicycle & motorized scooter operation; provides various penalties. Effective Date: July 1, 2027

Current Committee of Reference: House Government Operations Subcommittee

SB 0260 **Removal, Storage, and Cleanup of Electric Vehicles** by Burgess

Removal, Storage, and Cleanup of Electric Vehicles; Requiring counties to establish a daily administration fee for the proper storage of certain electric vehicles; providing a maximum amount for such fees; providing applicability; defining the terms “daily administration fee” and “proper storage”; providing that motor vehicle insurers are not required to pay certain costs, etc. Effective Date: July 1, 2026

Current Committee of Reference: Senate Transportation

HB 0263 **Public Records** by Rizo

Public Records: Provides exemption from public records requirements for personal identifying & location information of current county administrators, deputy county administrators, assistant county administrators, city managers, deputy city managers, & assistant city managers, including names & personal identifying & location information of their spouses & children; provides for future legislative review & repeal; provides for retroactive application; provides statement of public necessity. Effective Date: July 1, 2026

Current Committee of Reference: House Intergovernmental Affairs Subcommittee

HB 0267 **Local Housing Assistance Plans** by Stark

Local Housing Assistance Plans: Authorizes county or eligible municipality to expend certain funds on

lot rental assistance for mobile home owners for specified time period; requires counties & eligible municipalities to develop certain strategies in their local housing assistance plans; provides that lot rental assistance is approved home ownership activity for certain purposes; authorizes certain funds to be provided to mobile home owners for rehabilitation & emergency repairs; removes prohibition that only certain percentage of funds may be used for manufactured housing. Effective Date: July 1, 2026
Current Committee of Reference: House Commerce Committee

SB 0270 **Homestead Property Exemption for Persons Age 65 or Older** by Bernard

Homestead Property Exemption for Persons Age 65 or Older; Proposing an amendment to the State Constitution to exempt homestead property from all levies other than school district levies for persons who have attained age 65, prohibit counties and municipalities from reducing total funding for law enforcement, etc.

Current Committee of Reference: Senate Finance and Tax

SB 0272 **Homestead Exemption for Persons 65 and Older** by Bernard

Homestead Exemption for Persons 65 and Older; Expanding the homestead exemption for persons 65 years and older to include a total exemption of homestead property from ad valorem taxation, other than for school district levies, for certain persons whose household income does not exceed a certain

amount; authorizing the Department of Revenue to adopt emergency rules, etc. Effective Date: On the effective date of the amendment to the State Constitution proposed by SJR 270 or a similar joint resolution having substantially the same specific intent and purpose, if such amendment to the State Constitution is approved at the next general election or at an earlier special election specifically authorized by law for that purpose

Current Committee of Reference: Senate Finance and Tax

SB 0274 **Homestead Property Tax Benefits for Long-term Owners** by Bernard

Homestead Property Tax Benefits for Long-term Owners; Proposing amendments to the State Constitution to provide that the assessed value of homestead property may not increase after 20 years of ownership and residency, to provide an additional homestead tax exemption equal to 50 percent of the assessed value of property, other than school district levies, for persons who have owned and resided on the property as their permanent residence for 30 years or more, and to provide an effective date, etc.

Current Committee of Reference: Senate Finance and Tax

SB 0276 **Homestead Property Tax Benefits For Long-term Owners And Permanent Residents** by Bernard

Homestead Property Tax Benefits for Long-term Owners and Permanent Residents; Requiring that certain property be assessed at less than just value when the person who owns the property has owned and used the property as his or her permanent residence for a specified timeframe; providing that the assessed value of such property shall be a certain amount and may not be increased under certain circumstances; specifying a homestead exemption for certain long-term owners and residents; authorizing periods of ownership and residency to be aggregated, etc. Effective Date: On the effective date of the amendment to the State Constitution proposed by SJR 274 or a similar joint resolution having substantially the same specific intent and purpose, if such amendment to the State Constitution is approved at the next general election or at an earlier special election specifically authorized by law for that purpose

Current Committee of Reference: Senate Finance and Tax

SB 0278 **Limitation on the Assessed Value of New Homestead Property** by Bernard

Limitation on the Assessed Value of New Homestead Property; Proposing amendments to the State Constitution to limit the assessed value of new homestead property established after a change of ownership which had an assessed value of less than a certain amount to no more than 150 percent of the assessed value of the property for the preceding year for ad valorem taxation purposes and to provide an effective date, etc.

Current Committee of Reference: Senate Finance and Tax

SB 0280 **Assessment of Homestead Property** by Bernard

Assessment of Homestead Property; Limiting the assessed value upon change of ownership of homestead property having a prior assessed value below a certain amount when the person acquiring the property is entitled to a homestead exemption, etc. Effective Date: On the effective date of the amendment to the State Constitution proposed by SJR 278 or a similar joint resolution having substantially the same specific intent and purpose, if such amendment is approved at the next general election or at an earlier special election specifically authorized by law for that purpose

Current Committee of Reference: Senate Finance and Tax

SB 0282 **Limitation on the Assessed Value of Property Owned and Used for Commercial Purposes by Small Businesses** by Bernard

Limitation on the Assessed Value of Property Owned and Used for Commercial Purposes by Small Businesses; Proposing amendments to the State Constitution to limit the assessed value of real property owned and used for commercial purposes by a small business for ad valorem taxation purposes so that such assessed value may not exceed 3 percent or the percentage change in the Consumer Price Index, whichever is lower, and to provide an effective date, etc.

Current Committee of Reference: Senate Finance and Tax

SB 0286 **Assessment of Changes, Additions, or Improvements to Homestead Properties** by Bernard

Assessment of Changes, Additions, or Improvements to Homestead Properties; Revising the manner of assessing the value of changes, additions, or improvements to homestead property, etc. Effective Date: 7/1/2026

Current Committee of Reference: Senate Finance and Tax

SB 0290 **Department of Agriculture and Consumer Services** by Truenow

Department of Agriculture and Consumer Services; Prohibiting counties from enacting or enforcing any law that restricts or prohibits the use of gasoline-powered farm equipment or gasoline-powered landscape equipment or that distinguishes such equipment from any other equipment under certain circumstances; prohibiting an application for a development on an ecologically significant parcel in a lowdensity municipality from being administratively approved without an attestation provided by the developer; establishing the Florida Food Animal Veterinary Medicine Loan Repayment Program; revising the Florida Forest Service’s powers, authority, and duties, etc. Effective Date: 7/1/2026

Current Committee of Reference: Senate Fiscal Policy

HB 0313 **Housing** by Nix, Jr.

Housing: Requires, rather than authorizing, local governments to adopt, by specified date, ordinance to allow accessory dwelling units in certain areas; requires that such ordinances apply prospectively; prohibits inclusion of certain requirements or prohibitions in such ordinances; removes requirement that application for building permit to construct accessory dwelling unit include certain affidavit; revises accessory dwelling units that apply toward satisfying certain component of local government's comprehensive plan; prohibits denial of homestead exemption for certain portions of property on specified basis; requires that rented accessory dwelling unit be assessed separately from homestead property & taxed according to its use; authorizes local government to provide density bonus incentive to landowners who make certain real property donations to assist in provision of affordable housing for military families; requires OPPAGA to evaluate efficacy of using mezzanine finance & potential of tiny homes for specified purposes; requires office to consult with certain entities; requires office to submit certain report to Legislature by specified date. Effective Date: July 1, 2026

Current Committee of Reference: House Housing, Agriculture & Tourism Subcommittee

---

HB 0323 **Parking on Public Property** by Steele

Parking on Public Property: Defines "public property" & "publicly owned buildings or facilities"; requires local governments to refund owners of vehicles who pay fees to park on specified public property in certain circumstances; requires local governments to carry over any unused portion of time for benefit of next vehicle owner who pays fee to park on such public property in certain circumstances; prohibits certain vehicles from being towed or issued traffic citation for specified time period after being parked on specified public property; prohibits local governments from allowing private business entities or enterprises to use specified public property for private parking purposes for fee. Effective Date: July 1, 2026

Current Committee of Reference: House Intergovernmental Affairs Subcommittee

---

SB 0332 **Public Meetings** by Bradley

Public Meetings; Providing that specified entities may meet in private with their attorneys to discuss certain claims concerning private property rights; requiring that such meetings be transcribed; providing that such transcripts become public records at specified times, etc. Effective Date: 7/1/2026

Current Committee of Reference: Senate Judiciary

HB 0337 **Food Insecure Areas** by Rayner

Food Insecure Areas: Authorizes local government to enact land development regulations to permit land use for small-footprint grocery store located in food insecure area; authorizes local government to include in its comprehensive plan provision permitting land use for small-footprint grocery store located in food insecure area; authorizes local government to require mandatory reporting of certain information from small-footprint grocery store. Effective Date: July 1, 2026

Current Committee of Reference: House Housing, Agriculture & Tourism Subcommittee

---

HB 0347 **Adoption and Display of Flags by Governmental Entities** by Borrero

Adoption and Display of Flags by Governmental Entities: Prohibits governmental entity from displaying, placing, or causing to be placed certain flags on real property; specifies flags governmental entity may display on such property; provides requirements for governmental entity that displays flag of United States; prohibits local government from adopting certain ordinances or regulations relating to flag of local government; provides that certain ordinances & regulations are void. Effective Date: July 1, 2026

Current Committee of Reference: House Government Operations Subcommittee

---

SB 0356 **Utility Terrain Vehicles** by Wright

Utility Terrain Vehicles; Authorizing the operation of a utility terrain vehicle (UTV) during all hours; authorizing the operation of UTVs on certain roadways; authorizing the Department of Transportation to prohibit the operation of UTVs under certain circumstances; requiring owners or operators of a UTV to comply with certain requirements and regulations, etc. Effective Date: January 1, 2027

Current Committee of Reference: Senate Appropriations Committee on Transportation, Tourism, and Economic Development

---

SB 0382 **Electric Bicycles, Scooters, And Motorcycles** by Truenow

Electric Bicycles, Scooters, And Motorcycles; Defining the term “electric motorcycle”; providing penalties for knowingly modifying an electric bicycle; prohibiting a person from operating a class 3 electric bicycle without a certain license; requiring a minimum number of questions in the test bank for a Class E driver license to cover safe electric bicycle and motorized scooter operation, etc. Effective Date: 7/1/2027

Current Committee of Reference: Senate Transportation

HB 0399 **Land Use and Development Regulations** by Borrero

Land Use and Development Regulations: Prohibits local governments from adopting certain local land development regulations; establishes requirements for certain local land development regulations that impose fee, charge, or exaction; declares certain local land development regulations null & void; requires OPPAGA to perform study to identify effect of removing Urban Development Boundary or similar boundaries in Miami-Dade County and other counties; requiring OPPAGA to submit specified report to Legislature by specified date. Effective Date: July 1, 2026

Current Committee of Reference: House Intergovernmental Affairs Subcommittee

---

HB 0425 **Historic Cemeteries Program** by Aristide

Historic Cemeteries Program: Requires local governments to approve applications from historic African-American cemeteries to change land use category & zoning district of excess vacant land under certain conditions. Effective Date: July 1, 2026

Current Committee of Reference: House Intergovernmental Affairs Subcommittee

---

SB 0426 **Adoption and Display of Flags by Governmental Entities** by Yarborough

Adoption and Display of Flags by Governmental Entities; Prohibiting a governmental entity from displaying, placing, or causing to be placed certain flags on real property; providing a penalty; specifying flags a governmental entity may display on such property; prohibiting a local government from adopting certain ordinances or regulations relating to the flag of the local government, etc. Effective Date: 7/1 /2026

Current Committee of Reference: Senate Governmental Oversight and Accountability

---

HB 0433 **Department of Agriculture and Consumer Services** by Alvarez, D.

Department of Agriculture and Consumer Services: Prohibits counties & municipalities from enacting or enforcing any law that restricts or prohibits use of gasoline-powered farm equipment or gasolinepowered landscape equipment or that distinguishes such equipment from any other equipment; requires Acquisition & Restoration Council to determine whether certain surplused lands are suitable for bona fide agricultural purposes; prohibits local governmental entity from transferring future development rights for surplused lands determined to be suitable for bona fide agricultural purposes; requires DEP, in coordination with DACS, to determine whether state-owned conservation lands are suitable for bona fide agricultural purposes; authorizes DEP to surplus specified state-owned lands determined to be suitable for bona fide agricultural purposes; prohibits person from wearing or displaying item that displays words "concealed weapon permit" or "concealed weapon permit holder" with intent to mislead another to believe that person is authorized to wear or display such item; prohibits possession, manufacture, sale, importation, distribution, or use of signal jamming device. Effective Date: July 1, 2026

Current Committee of Reference: House Commerce Committee

SB 0434 **Assessment of Property Used for Residential Purposes** by Leek

Assessment of Property Used for Residential Purposes; Defining the term “changes or improvements made to improve the property’s resistance to wind damage”; prohibiting the consideration of the increase in just value of a property which is attributable to changes or improvements made to improve the property’s resistance to wind damage in determinations of the assessed value of certain property, etc. Effective Date: July 1, 2026

Current Committee of Reference: Senate Finance and Tax

SB 0450 **Ad Valorem Tax Exemption for Disabled Veterans** by Polsky

Ad Valorem Tax Exemption for Disabled Veterans; Removing a limitation on the value of a tax exemption that a surviving spouse could transfer to a new residence; revising when a specified tax exemption is considered to be granted, etc. Effective Date: July 1, 2026

Current Committee of Reference: Senate Finance and Tax

HB 0455 **Protection of Historic Monuments and Memorials** by Black

Protection of Historic Monuments and Memorials: Preempts all removal, damage to, or destruction of historic Florida monuments & memorials; provides that any existing or future ordinance, regulation, or rule to contrary, & certain actions by elected or appointed local government officials, are void; prohibits

local governments from enacting or enforcing specified ordinances, regulations, or rules; provides penalties; requires DOS to withhold certain funding from local government; authorizes local government to temporarily remove & relocate monument or memorial in certain instances; authorizes Division of Historical Resources of DOS to request certain recommendations from Florida Historical Commission & Department of Veterans' Affairs. Effective Date: upon becoming a law

Current Committee of Reference: House Government Operations Subcommittee

---

HB 0479 **Land and Water Management** by Maggard

Land and Water Management: Prohibits counties & municipalities from adopting laws, regulations, rules, policies, or ordinances that prohibit adjacent upland activities that are outside certain wetland buffers;
repeals provisions relating to land management review teams. Effective Date: July 1, 2026

Current Committee of Reference: House Natural Resources & Disasters Subcommittee

---

SB 0488 **Department of Highway Safety and Motor Vehicles** by Massullo, Jr.

Department of Highway Safety and Motor Vehicles; Requiring licensure in lieu of registration of motor carriers operating certain qualified motor vehicles; revising due dates for motor fuel use tax returns submitted by licensed motor carriers; authorizing the department to inspect records necessary to verify the tax returns of motor carriers, motor fuel retail dealers, and motor fuel wholesale distributors; revising the apparent amount of property damage which requires the driver of a vehicle involved in a crash to notify law enforcement of the crash, etc. Effective Date: 7/1/2026

Current Committee of Reference: Senate Appropriations Committee on Transportation, Tourism, and Economic Development

---

SB 0496 **Protection of Historic Monuments and Memorials** by McClain

Protection of Historic Monuments and Memorials; Citing this act as the “Historic Florida Monuments and Memorials Protection Act”; preempting all removal, damage to, or destruction of historic Florida monuments and memorials; providing that any existing or future ordinance, regulation, or rule to the contrary, and certain actions by elected or appointed local government officials, are void; providing civil penalties for certain officials who engage in certain actions; authorizing a local government to temporarily remove and relocate a monument or memorial in certain instances provided certain requirements are met, etc. Effective Date: Upon becoming a law

Current Committee of Reference: Senate Governmental Oversight and Accountability

---

SB 0504 **Code Inspector Body Cameras** by Burgess

Code Inspector Body Cameras; Requiring a governmental entity that permits its code inspectors to wear body cameras to establish certain policies and procedures; requiring such governmental entity to ensure that certain training occurs, to retain certain data in accordance with public records laws, and to perform a periodic review of actual body camera practices; providing that certain provisions relating to the interception of wire, electronic, and oral communications do not apply to body camera recordings made by code inspectors, etc. Effective Date: July 1, 2026

Current Committee of Reference: Senate Appropriations Committee on Criminal and Civil Justice

---

SB 0506 **Public Records/Body Camera Recordings Recorded by a Code Inspector** by Burgess

Public Records/Body Camera Recordings Recorded by a Code Inspector; Providing an exemption from public records requirements for body camera recordings recorded by a code inspector under certain circumstances; providing exceptions; requiring a local government to retain body camera recordings for a specified timeframe; providing for future legislative review and repeal of the exemption; providing a statement of public necessity, etc. Effective Date: On the same date that SB 504 or similar legislation

takes effect, if such legislation is adopted in the same legislative session or an extension thereof and becomes a law

Current Committee of Reference: Senate Appropriations Committee on Criminal and Civil Justice

---

SB 0508 **Landscape Irrigation** by Truenow

Landscape Irrigation; Creating the “Landscape Irrigation Standards and Watering Restrictions Act”; prohibiting a person from taking certain actions regarding a landscape irrigation system unless such person is a licensed irrigation contractor or the property owner; specifying that only a licensed irrigation contractor may connect an irrigation system to a water supply; providing a purpose for landscape irrigation system standards; creating a landscape irrigation watering schedule; providing for the enforcement of the act, etc. Effective Date: July 1, 2026

Current Committee of Reference: Senate Regulated Industries

HB 0509 **Code Inspector Body Cameras** by Partington

Code Inspector Body Cameras: Requires governmental entity that permits its code inspectors to wear body cameras to establish certain policies & procedures; requires such governmental entity to ensure that certain training occurs, to retain certain data in accordance with public records laws, & to perform periodic review of actual body camera practices; provides that certain provisions relating to interception of wire, electronic, & oral communications do not apply to body camera recordings made by code inspectors. Effective Date: July 1, 2026

Current Committee of Reference: House Intergovernmental Affairs Subcommittee

---

HB 0511 **Pub. Rec./Code Inspector Body Cameras** by Partington

Pub. Rec./Code Inspector Body Cameras: Provides exemption from public records requirements for body camera recordings recorded by code inspector; requires local government to retain body camera recordings for specified timeframe; provides for future legislative review & repeal of exemption; provides statement of public necessity; directs Division of Library & Information Services of DOS to adopt specified retention requirement for certain body camera recordings by specified date. Effective Date: on the same date that HB 509 or similar legislation takes effect

Current Committee of Reference: House Government Operations Subcommittee

---

HB 0521 **Fines for Violations Detected by Traffic Infraction Detectors** by Yeager

Fines for Violations Detected by Traffic Infraction Detectors: Authorizes county or municipality to issue fine for certain violations detected through use of traffic infraction detector; requires fine to be accompanied by certain photograph or image. Effective Date: July 1, 2026

Current Committee of Reference: House Government Operations Subcommittee

---

HB 0535 **Candidate Qualifying** by Benarroch

Candidate Qualifying: Requires certain candidates to provide filing officer statement disclosing dual citizenship for nomination & election to federal, state, county, multicounty, district, or judicial office or to district school board. Effective Date: July 1, 2026

Current Committee of Reference: House State Affairs Committee

---

HB 0543 **Transportation** by McFarland

Transportation: Requires DOT to increase minimum perception reaction time of all steady yellow signals by specified amount of time; requires licensing, rather than registration, of motor carriers & fuel tax decals, rather than identifying devices, for motor carriers; revises various provisions relating to qualified

motor vehicles, motor carriers, fuel tax decals, & temporary fuel-use permits; revises reporting periods & due dates for motor fuel use tax returns & requires such returns to be submitted electronically beginning on specified date; requires certain seaports to submit annual report describing measures taken to support commercial space launch industry to chair of Space Florida board of directors beginning on specified date; prohibits certain seaports from converting planned or existing land, facilities, or infrastructure that supports cargo purposes unless specified conditions are met; requires legislative approval for use of state funds for specified projects; authorizes private entity to install automated license plate recognition system for use on certain property; requires motor vehicle to be equipped with exhaust system to prevent excessive or unusual noise; prohibits such system from allowing noise that is audible at specified distance from vehicle; authorizes certain golf carts to be titled & registered for operation on certain roads without inspection by DHSMV; provides requirements for electronic credentialing system; authorizes DHSMV to make direct payments to certain subcontractors under specified conditions; requires DHSMV to implement Next-generation Traffic Signal Modernization Grant Program. Effective Date: July 1, 2026

Current Committee of Reference: House Commerce Committee

SB 0548 **Growth Management** by McClain

Growth Management; Deleting an exception to an applicability provision relating to concurrency; requiring that a demonstrated-need study use plan-based methodology for a certain purpose; revising the voting threshold required for approval of an ordinance increasing an impact fee beyond certain phase-in limitations; prohibiting local governments and school districts from increasing impact fee rates beyond certain phase-in limitations by more than a specified percentage within a certain timeframe, etc. Effective Date: 7/1/2026

Current Committee of Reference: Senate Community Affairs

SB 0550 **Prohibition on Levying Ad Valorem Taxes on Tangible Personal Property** by Bernard

Prohibition on Levying Ad Valorem Taxes on Tangible Personal Property; Proposing amendments to the State Constitution to prohibit levying ad valorem taxes on tangible personal property by counties, school districts, and municipalities and to provide an effective date, etc.

Current Committee of Reference: Senate Finance and Tax

SB 0552 **Prohibition on Levying Ad Valorem Taxes on Tangible Personal Property** by Bernard

Prohibition on Levying Ad Valorem Taxes on Tangible Personal Property; Conforming provisions to proposed amendments made to the State Constitution which prohibit levying ad valorem taxes on tangible personal property by counties, school districts, and municipalities; repealing a provision relating to the property appraiser’s assessments and effect of determinations by value adjustment boards; repealing a provision relating to extending the date for filing tangible personal property tax returns; repealing a provision relating to tax returns to show all exemptions and claims, etc. Effective Date: On the effective date of the amendment to the State Constitution proposed by SJR 550 or a similar joint resolution having substantially the same specified intent and purpose, if such amendment to the State Constitution is approved at the next general election or at an earlier special election specifically authorized by law for that purpose

Current Committee of Reference: Senate Finance and Tax

HB 0555 **Local Licensing of Home Caregivers** by Skidmore

Local Licensing of Home Caregivers: Authorizes counties & municipalities to license home caregivers within their jurisdictions. Effective Date: July 1, 2026

Current Committee of Reference: House Health Care Facilities & Systems Subcommittee

---

SB 0558 **Standards for Storm Water Systems** by Burgess

Standards for Storm Water Systems; Requiring storm water systems in counties and municipalities, respectively, to comply with specified Department of Transportation standards; providing inspection requirements for such systems; specifying that certain local standards are superseded, etc. Effective Date: July 1, 2026

Current Committee of Reference: Senate Environment and Natural Resources

---

HB 0575 **Auxiliary Containers** by Weinberger

Auxiliary Containers: Defines "auxiliary container" and "single-use"; removes obsolete provisions; preempting regulation of auxiliary containers to state; provides exceptions; requires DEP to develop uniform ordinance for use and disposition of single-use, nonrecyclable auxiliary containers; provides requirements for development of such ordinance; requires that sale or distribution of single-use plastic auxiliary containers on lands managed by Division of Recreation & Parks of DEP be eliminated to greatest extent possible; prohibits use, sale, or distribution of certain single-use auxiliary containers on such lands; requires department to develop and make available on its website statewide Marine Debris Reduction Plan; provides requirements for such plan; removes s. 500.90, F.S., relating to regulation of polystyrene products preempted to DACS. Effective Date: July 1, 2026

Current Committee of Reference: House Natural Resources & Disasters Subcommittee

---

SB 0576 **Local Government Cyber Security** by Harrell

Local Government Cyber Security; Creating the Local Government Cybersecurity Protection Program; requiring local governments to participate in the program and to apply to the Florida Digital Service to use cybersecurity programs and software; establishing priority for certain counties under the program; requiring the Florida Digital Service through the department to secure and administer federal funds, etc. Effective Date: July 1, 2026

Current Committee of Reference: Senate Governmental Oversight and Accountability

---

SB 0580 **Local Licensing of Home Caregivers** by Harrell

Local Licensing of Home Caregivers; Authorizing counties and municipalities to license home caregivers within their jurisdictions, etc. Effective Date: 7/1/2026

Current Committee of Reference: Senate Health Policy

SB 0588 **Local Government Enforcement Actions** by McClain

Local Government Enforcement Actions; Prohibiting certain enforcement actions by counties, municipalities, and special districts, respectively; defining the term “enforcement action”; requiring counties, municipalities, and special districts, respectively, to establish and maintain rules; authorizing filing of legal action and providing legal remedies in certain circumstances, etc. Effective Date: October 1, 2026

Current Committee of Reference: Senate Community Affairs

HB 0589 **Onsite Sewage Treatment and Disposal System Permits** by Nix, Jr.

Onsite Sewage Treatment and Disposal System Permits: Prohibits municipality or political subdivision of state from requiring owners & builders of certain residences to receive construction permits from DEP as condition of issuing building or plumbing permits; requires such owners & builders to provide certain proof to municipality or political subdivision. Effective Date: upon becoming a law

Current Committee of Reference: House Natural Resources & Disasters Subcommittee

---

SB 0594 **Local Housing Assistance Plans** by Burton

Local Housing Assistance Plans; Authorizing counties and eligible municipalities to expend certain funds on lot rental assistance for mobile home owners for a specified time period; requiring each county and eligible municipality to include in its local housing assistance plan certain strategies; authorizing counties and eligible municipalities to provide certain funds to mobile home owners for rehabilitation and emergency repairs, etc. Effective Date: July 1, 2026

Current Committee of Reference: Senate Appropriations Committee on Transportation, Tourism, and Economic Development

SB 0602 **Watercraft Restrictions Based on Energy Source** by Bernard

Watercraft Restrictions Based on Energy Source; Providing an exception to the prohibition on state agencies, governmental authorities, and local governments restricting the use or sale of watercraft based on the energy source used to power the watercraft if such watercraft is used on certain bodies of water, etc. Effective Date: July 1, 2026

Current Committee of Reference: Senate Environment and Natural Resources

SB 0610 **Residential Swimming Pool Requirements** by Smith

Residential Swimming Pool Requirements; Requiring that swimming pools located on residential real property that is transferred or sold on or after a specified date meet certain pool safety requirements; requiring that swimming pools located on residential real property that is transferred or sold on or after a specified date meet certain pool barrier requirements, etc. Effective Date: 7/1/2026

Current Committee of Reference: Senate Regulated Industries

HB 0611 **Landscape Irrigation** by Cobb

Landscape Irrigation: Prohibits certain actions regarding landscape irrigation systems unless such actions are taken by licensed irrigation contractors or property owners; authorizes local governments or water management districts to adopt certain requirements for property owners who install such systems; provides requirements for permits, plans, equipment & capacity, maintenance, & water schedules relating to such systems; provides fines & penalties; prohibits local governments from adopting or enforcing certain laws, rules, or regulations; authorizes DEP to adopt rules; revises membership of Construction Industry Licensing Board. Effective Date: July 1, 2026

Current Committee of Reference: House Natural Resources & Disasters Subcommittee

SB 0620 **Candidate Qualifying** by Mayfield

Candidate Qualifying; Requiring certain candidates to provide the filing officer a statement disclosing dual citizenship for nomination and election to federal, state, county, multicounty, district, or judicial office or to a district school board, etc. Effective Date: 7/1/2026

Current Committee of Reference: Senate Judiciary

HB 0629 **Regulation of Auxiliary Containers** by Esposito

Regulation of Auxiliary Containers: Preempts regulation of auxiliary containers to state; authorizes rules, regulations, & ordinances restricting use of glass auxiliary containers within boundaries of public beach or state park; authorizes Division of Recreation & Parks to regulate auxiliary containers within state parks. Effective Date: July 1, 2026

Current Committee of Reference: House Natural Resources & Disasters Subcommittee

HB 0635 **Cybersecurity Standards and Liability** by Giallombardo

Cybersecurity Standards and Liability: Authorizes local governments to only adopt specified cybersecurity standards; prohibits DMS from delegating authority to set such standards to local governments; requires vendors to comply with specified cybersecurity standards; defines "vendor"; provides that local government, covered entity, or third-party agent that complies with certain requirements is not liable in connection with cybersecurity incident; requires covered entities & thirdparty agents to implement revised frameworks, standards, laws, or regulations within specified time period.

Current Committee of Reference: House Information Technology Budget & Policy Subcommittee

SB 0650 **Local Business Taxes** by Bernard

Local Business Taxes; Repealing provisions relating to local business taxes; authorizing certain counties to continue to impose a business tax; authorizing such counties to revise the definition of the term “merchant” in a specified manner; prohibiting such counties from revising a specified tax rate, etc. Effective Date: July 1, 2026

Current Committee of Reference: Senate Community Affairs

SB 0654 **Traffic Infraction Enforcement** by DiCeglie

Traffic Infraction Enforcement; Revising the periods during which a county or municipality may enforce school zone speed limits, and the violations for which such enforcement is authorized, through the use of a speed detection system; prohibiting the use of a traffic infraction detector for remote surveillance; requiring district school board authorization and a public hearing process before a school district may place or install, or contract with a vendor to install, operate, and maintain, school bus infraction detection systems; revising the periods for which a county or municipality may authorize a traffic infraction enforcement officer to issue certain uniform traffic citations, etc. Effective Date: 10/1/2026

Current Committee of Reference: Senate Transportation

HB 0675 **Affordable Housing** by Driskell

Affordable Housing: Revises upwards length of time that certain rental units must remain affordable in order to qualify for specified zoning variance; requires certain incentives be used for construction of affordable housing; revises upwards length of time that certain rental units must remain affordable in order to qualify for specified zoning variance; revises downward maximum median income used to determine eligibility for certain tax incentives; specifies that certain taxes do not apply to first-time homebuyers. Effective Date: July 1, 2026

Current Committee of Reference: House Housing, Agriculture & Tourism Subcommittee

SB 0692 **Cybersecurity Standards And Liability** by Leek

Cybersecurity Standards and Liability; Authorizing local governments to only adopt specified cybersecurity standards; prohibiting the Department of Management Services from delegating the authority to set such standards to local governments; providing that a local government, a covered entity, or a third-party agent that complies with certain requirements is not liable in connection with a cybersecurity incident under certain circumstances, etc. Effective Date: Upon becoming a law

Current Committee of Reference: Senate Governmental Oversight and Accountability

SB 0698 **Onsite Sewage Treatment and Disposal System Permits** by Martin

Onsite Sewage Treatment and Disposal System Permits; Prohibiting a municipality or political subdivision of the state from requiring owners and builders of certain residences to receive construction permits from the Department of Environmental Protection as a condition of issuing building or plumbing

permits; requiring such owners and builders to provide certain proof to the municipality or political subdivision, etc. Effective Date: Except as otherwise expressly provided in this act, this act shall take effect upon becoming a law

Current Committee of Reference: Senate Environment and Natural Resources

---

SB 0718 **Water Management** by McClain

Water Management; Prohibiting counties and municipalities from adopting laws, regulations, rules, or policies relating to water quality or quantity, pollution control, pollutant discharge prevention or removal, or wetlands; preempting such regulation to the state; repealing a provision relating to land management review teams, etc. Effective Date: 7/1/2026

Current Committee of Reference: Senate Environment and Natural Resources

---

SB 0750 **Alternative Plans Review and Building Inspection** by DiCeglie

Alternative Plans Review and Building Inspection; Deleting a provision authorizing a local government to charge an administrative fee when an owner or contractor retains a private provider for purposes of plans review or building inspection services, etc. Effective Date: 7/1/2026

Current Committee of Reference: Senate Community Affairs

SB 0752 **Taxation of First-time Buyers** by DiCeglie

Taxation of First-time Buyers; Specifying that documentary stamp taxes do not apply to deeds, transfers, or conveyances of residential property to first-time homebuyers; defining the term “first-time homebuyer”; specifying that documentary stamp taxes do not apply to certain documents executed by a first-time homebuyer in connection with the purchase of a principal residence, etc. Effective Date: 7/1/2026

Current Committee of Reference: Senate Finance and Tax

SB 0756 **Affordable Housing** by Davis

Affordable Housing; Increasing the length of time that certain rental units must remain affordable in order to qualify for a specified zoning variance; requiring that certain incentives be used for the construction of affordable housing; decreasing the maximum median income used to determine eligibility for certain tax incentives; specifying that documentary stamp taxes do not apply to deeds, transfers, or conveyances of residential property to first-time homebuyers, etc. Effective Date: 7/1/2026

Current Committee of Reference: Senate Community Affairs

SB 0766 **Waste Management** by Martin

Waste Management; Deleting obsolete provisions that provide legislative findings and require the Department of Environmental Protection to review and update a specified report; preempting the regulation of auxiliary containers to the state; permitting rules, regulations, or ordinances restricting the use of glass auxiliary containers within the boundaries of a public beach; authorizing the Division of Recreation and Parks to regulate auxiliary containers within state parks; specifying that certain local ordinances and restrictions are permitted, etc. Effective Date: July 1, 2026

Current Committee of Reference: Senate Environment and Natural Resources

---

HB 0773 **Municipal Utilities** by Brackett

Municipal Utilities: Authorizes municipality to transfer portion of its public utility earnings to its general fund; requires that such percentages be established or reestablished by local referendum, subject to majority vote; provides exception to percentage restrictions in event of disaster or emergency;

authorizes such percentages to be established by passage of resolution, by four-fifths vote; requires such percentages to be repaid to general fund within specified time period; prohibits municipality from transferring portion of its public utility earnings in certain instances; prohibits ability of municipality to receive certain state funds if such prohibited transfer is effected; requires specified disclosure in budget & financial report of municipality. Effective Date: July 1, 2026

Current Committee of Reference: House Economic Infrastructure Subcommittee

---

HB 0803 **Building Permits and Inspections** by Trabulsy

Building Permits and Inspections: Revises provisions relating to building code inspection services provided by private provider & private provider firms, including agreement requirements, permit fees, administrative fees, responsibilities of private providers, permitting & inspection documents & reports, timeframes for issuing permits, authority of local building official, notices of incomplete forms, duly authorized representatives, authority of private providers acting as local building official, emergency inspection services, creation of certain forms, systems of registration, audits, immunity, civil causes of action, posting of permits on specified websites, & adoption of a uniformed permitting system. Effective Date: July 1, 2026

Current Committee of Reference: House Industries & Professional Activities Subcommittee

---

SB 0840 **Land Use Regulations for Local Governments Affected by Natural Disasters** by DiCeglie

Land Use Regulations for Local Governments Affected by Natural Disasters; Prohibiting impacted local governments from enforcing certain moratoriums, requiring the repair or reconstruction of certain improvements to meet certain requirements, or enforcing changes to specified procedures; revising circumstances under which impacted local governments may enforce certain amendments, site plans, development permits, or development orders; deleting provisions related to filing suit against an impacted local government for injunctive relief, etc. Effective Date: 7/1/2026

Current Committee of Reference: Senate Judiciary

SB 0852 **Food Insecure Areas** by Jones

Food Insecure Areas; Authorizing a local government to enact land development regulations to permit land use for a small-footprint grocery store located in a food insecure area; authorizing a local government to include in its comprehensive plan a provision permitting land use for a small-footprint grocery store located in a food insecure area, etc. Effective Date: July 1, 2026

Current Committee of Reference: Senate Community Affairs

HB 0853 **Mobile Home Park Regulations** by Long

Mobile Home Park Regulations: Authorizes counties & municipalities to adopt & enforce local laws, codes, or ordinances relating to mobile home park lot tenancies; authorizes code enforcement officer to cite certain violations to mobile home park owner or mobile home owner; revises obligations & responsibilities of mobile home park owner; revises obligations & responsibilities of mobile home owner; removes provision that mobile home owner is responsible for certain fines; authorizes unit of local government to adopt & enforce local laws, ordinances, or codes for specified purpose; authorizes unit of local government to adopt & enforce local laws, ordinances, or codes for specified purpose; authorizes unit of local government to bring civil proceeding against mobile home park owner or mobile home lot. Effective Date: July 1, 2026

Current Committee of Reference: House Housing, Agriculture & Tourism Subcommittee

---

HB 0865 **Local Regulation of Drinking Straws and Stirrers** by Blanco

Local Regulation of Drinking Straws and Stirrers: Prohibits local governmental entities from enacting any rule, regulation, or ordinance for drinking straws or stirrers which does not meet specified

requirements; provides requirements for local governmental entities that elect to enact rules, regulations, or ordinances for drinking straws or stirrers. Effective Date: upon becoming a law

Current Committee of Reference: House Natural Resources & Disasters Subcommittee

---

HB 0903 **Assessed Value of Nonhomestead Property** by Grow

Assessed Value of Nonhomestead Property: Proposes State Constitutional amendment reducing maximum percentage assessed value of nonhomestead properties may increase annually.

Current Committee of Reference: House Ways & Means Committee

SB 0910 **Parking on Public Property** by Mayfield

Parking on Public Property; Defining the terms “public property” and “publicly owned buildings or facilities”; requiring local governments to refund owners of vehicles who pay fees to park on specified public property in certain circumstances; prohibiting certain vehicles from being towed or issued a traffic citation for a specified time period after being parked on specified public property; prohibiting local governments from allowing private business entities or enterprises to use specified public property for private parking purposes for a fee; providing construction, etc. Effective Date: July 1, 2026

Current Committee of Reference: Senate Transportation

HB 0927 **Local Land Planning and Development** by Sapp

Local Land Planning and Development: Requires land development regulation commission to develop model ordinance to guide local governments in enactment of land planning & development program ordinance; requires local governments by date certain to enact land planning & development program ordinance under which local governments may enter into employment agreements with certain private providers to perform specified review services; establishes contract terms & conditions of employment agreements for review services under program ordinance; authorizes civil causes of action for specified relief; requires governing body of county or legal governing body of county, municipality, town, or village to create program, or to update existing program, to expedite process for issuing building permits for residential subdivisions, planned unit developments, or planned communities, or one or more phases of multi-phased community or subdivision, by date certain; authorizes applicant to use specified private provider for land use approvals to expedite application process for any plans necessary to support approval of site plan, preliminary plat, & final plat, or building permits after preliminary plat is approved. Effective Date: July 1, 2026

Current Committee of Reference: House Intergovernmental Affairs Subcommittee

---

SB 0940 **Municipal Water and Sewer Utility Rates, Fees, and Charges** by McClain

Municipal Water and Sewer Utility Rates, Fees, and Charges; Deleting a limitation on the amount of rates, fees, and charges municipal water and sewer utilities are authorized to impose on consumers for such services outside the boundaries of the municipality; providing for the continuance and phase out of certain bond covenant surcharges; requiring municipalities operating such utilities to submit a specified rate study every 7 years to the Department of Environmental Protection which evaluates certain information, etc. Effective Date: 7/1/2026

Current Committee of Reference: Senate Regulated Industries

SB 0948 **Local Government Land Development Regulations and Orders** by McClain

Local Government Land Development Regulations and Orders; Revising, for counties and municipalities, respectively, the application procedures for development permits and orders; creating the “Florida Starter Homes Act”; prohibiting local governments from adopting land development regulations governing lots on residential real property unless such adoption meets specified requirements; prohibiting local governments from adopting certain land development regulations if a lot on residential

real property is connected to a public water system or a public sewer system, etc. Effective Date: 7/1 /2026

Current Committee of Reference: Senate Community Affairs

HB 0957 **Deferred and Unpaid Taxes** by Long

Deferred and Unpaid Taxes: Limits specified tax deferral to properties with just value of $1 million or less; increases minimum value of tax certificate that may be sold at public auction or by electronic sale. Effective Date: July 1, 2026

Current Committee of Reference: House Ways & Means Committee

SB 0958 **Local Regulation of Drinking Straws and Stirrers** by Bradley

Local Regulation of Drinking Straws and Stirrers; Prohibiting local governmental entities from enacting any rule, regulation, or ordinance for drinking straws or stirrers which does not meet specified requirements; providing requirements for local governmental entities that elect to enact rules, regulations, or ordinances for drinking straws or stirrers, etc. Effective Date: Upon becoming a law

Current Committee of Reference: Senate Environment and Natural Resources

---

HB 0967 **Electronic Payments Made to Units of Local Governments** by Buchanan

Electronic Payments Made to Units of Local Governments: Revises legislative intent; requires units of local government to accept certain forms of payments; requires such local governments accept payments online. Effective Date: July 1, 2026

Current Committee of Reference: House Intergovernmental Affairs Subcommittee

---

SB 0968 **Home Backup Power Systems** by McClain

Home Backup Power Systems; Prohibiting a local government from adopting a technical amendment to the Florida Building Code which requires a permit or any functionally equivalent local review or approval for certain backup power systems; prohibiting a local government that issues building permits from requiring an owner of a single-family dwelling or such owner’s contractor to obtain a building permit to perform work on the single-family lot valued at less than a specified sum; prohibiting a local enforcement agency from requiring a permit or any functionally equivalent local review or approval for the installation, relocation, replacement, or repair of an eligible residential backup power system; defining the term “backup power system”, etc. Effective Date: July 1, 2026

Current Committee of Reference: Senate Community Affairs

HB 0979 **Infill Redevelopment** by Borrero

Infill Redevelopment: Requires local government to permit development of certain qualifying parcels up to certain density & intensity; requires local government to permit development of qualifying parcel with single-family homes or townhouses; prohibits local government from imposing certain restrictions or requirements on development of certain qualifying parcels; prohibits local government from using subdivision process to restrict development; requires developers of qualifying parcels to establish that certain recreational facilities & areas reserved for recreational use have not been in operation or use for certain timeframe, to pay double parks & recreational facilities impact fees for certain purpose, & to provide certain written notice to certain property owners; requires property owners who receive such written notice to exercise option to purchase certain parcels or portions thereof within specified timeframe or forfeit option. Effective Date: upon becoming a law

Current Committee of Reference: House Intergovernmental Affairs Subcommittee

---

SB 0998 **Department of Commerce** by Yarborough

Department of Commerce; Repealing provisions relating to the Florida Small Cities Community Development Block Grant Program Act; providing an exemption for certain conveyances of state lands to certain federal agencies which revert to the Board of Trustees of the Internal Improvement Trust Fund if such land is not used for its intended purposes as a military installation buffer or if the military installation closes; requiring employers who are required to use the E-Verify system to verify a new employee's employment eligibility to maintain an E-Verify case result for each employee which shows that the employee is authorized to work; requiring the department to provide an employer knowingly employing an unauthorized alien with a written determination, etc. Effective Date: July 1, 2026

Current Committee of Reference: Senate Commerce and Tourism

HB 1001 **Official Actions of Local Governments** by Black

Official Actions of Local Governments: Prohibits counties & municipalities, respectively, from funding or promoting or taking official action as it relates to diversity, equity, & inclusion; prohibits counties & municipalities from expending funds for diversity, equity, & inclusion offices or for diversity, equity, & inclusion officers; provides that county commissioner, member of governing body of municipality, or any other county or municipal official acting in official capacity who violates certain provisions commits misfeasance or malfeasance in office; authorizes cause of action against counties & municipalities; authorizes court to enter judgment awarding certain relief, damages, & costs; requires potential recipients of county or municipal contracts or grants to make certain certification to county or municipality before being awarded such contract or grant. Effective Date: January 1, 2027

Current Committee of Reference: House Intergovernmental Affairs Subcommittee

---

HB 1007 **Hyperscale Data Centers** by Griffitts Jr.

Hyperscale Data Centers: Provides that hyperscale data centers are prohibited use on or after date certain for specified land use categories in local in comprehensive plans & agricultural zoning districts within unincorporated areas; prohibits utilities, in fixing rates for hyperscale data centers, from collecting certain impact fees; requires permit applications for consumptive use of water relating to hyperscale data centers to contain specified disclosure; prohibits construction & operation of hyperscale data centers on specified lands & water on or after date certain; provides for hearing requirement before construction & operation of hyperscale data centers; requires governing body of local government that approves construction & operation of hyperscale data center to request, in concurrence with specified board, approval; provides for concurrence hearing requirements; prohibits construction of hyperscale data center if board does not approve concurrence request at such hearing. Effective Date: July 1, 2026

Current Committee of Reference: House State Affairs Committee

---

SB 1014 **Provision of Municipal Utility Service to Owners Outside the Municipal Limits** by Mayfield

Provision of Municipal Utility Service to Owners Outside the Municipal Limits; Prohibiting a municipal utility from declining to extend service to properties outside its corporate limits under certain circumstances; requiring a municipal utility to expand its service to an owner who makes such a request under certain circumstances; requiring the municipal utility to make a determination within a specified timeframe and provide such determination to the owner in writing; requiring the municipal utility to provide the owner with specified information and to connect properties in a timely manner, etc. Effective Date: 7/1/2026

Current Committee of Reference: Senate Regulated Industries

SB 1018 **Deferred Compensation Plans for Public Employees** by Truenow

Deferred Compensation Plans for Public Employees; Citing this act as the "Deferred Compensation Automatic Enrollment Act'; authorizing the inclusion of an automatic enrollment arrangement in a government employee's deferred compensation plan; requiring that the automatic enrollment

arrangement provide employees the ability to make certain elections regarding contributions; requiring that the plan provide for a default investment into which contributions must be placed under a specified circumstance; authorizing counties, municipalities, political subdivisions, and constitutional county officers to adopt automatic enrollment arrangements for specified deferred compensation programs, etc.
Effective Date: 7/1/2026

Current Committee of Reference: Senate Governmental Oversight and Accountability

---

HB 1049 **Building Permit Requirements** by Esposito

Building Permit Requirements: Prohibits local government from adopting certain technical amendments to Florida Building Code; prohibits local government from requiring building permit for work valued at specified amount that is performed on single-family dwelling; authorizes local government to require building permit for certain work regardless of value of work; requires contractor to maintain certain written records; prohibits local enforcement agency from requiring building permit for specified work on backup power system that is installed by certain persons or entities; provides exception; prohibits local governments from adopting or enforcing certain ordinances, rules, or other measures; authorizes local enforcement agency to conduct certain inspections, either in person or virtually; authorizes owner or owner's contractor to use private provider for certain inspections; provides requirements for private provider; requires local enforcement agency to provide certain persons written notice of correction; authorizes stop-work order only under specific circumstances; requires local enforcement agency to offer owner or owner's contractor reinspection date within certain time period; provides that private provider inspection report constitutes acceptance; prohibits local enforcement agency from withholding or revoking certificate of occupancy based solely on failed inspection report. Effective Date: July 1, 2026

Current Committee of Reference: House Intergovernmental Affairs Subcommittee

---

HB 1085 **Local Government Cyber Security** by Miller

Local Government Cyber Security: Creates Florida State University Cybersecurity Protection Program; provides purpose of program; requires local governments to participate in program & to submit requests to Florida State University to use cybersecurity programs & software developed by university; establishes priority for certain counties under program; authorizes Florida State University to apply for & accept certain funds or grants. Effective Date: July 1, 2026

Current Committee of Reference: House Information Technology Budget & Policy Subcommittee

---

HB 1089 **Waste Facilities** by Bartleman

Waste Facilities: Prohibits local government from issuing construction permit for certain solid waste disposal & waste-to-energy facilities under certain circumstances. Effective Date: July 1, 2026

Current Committee of Reference: House Natural Resources & Disasters Subcommittee

---

HB 1125 **Local Government Salaries and Benefits** by Giallombardo

Local Government Salaries and Benefits: Revises requirements for board of county commissioners salary formula to apply to noncharter counties; provides for determination of salaries of members of boards of county commissioners of certain counties; requires referendum for board of county commissioners to increase salary, retirement benefits, or other compensation paid to its members; requires referendum election costs to be paid by county; requires referendum for governing body of municipality to increase salary, retirement benefits, or other compensation paid to its members; requires referendum election costs to be paid by municipality; requires referendum for governing body of special district to increase salary, retirement benefits, or other compensation paid to its members; requires referendum election costs to be paid by special district. Effective Date: October 1, 2026

Current Committee of Reference: House Intergovernmental Affairs Subcommittee

SB 1134 **Official Actions of Local Governments** by Yarborough

Official Actions of Local Governments; Prohibiting counties and municipalities, respectively, from funding or promoting or taking official action as it relates to diversity, equity, and inclusion; providing that certain ordinances, resolutions, rules, regulations, programs, and policies are void; providing that a county commissioner, a member of the governing body of a municipality, or any other county or municipal official acting in an official capacity who violates certain provisions commits misfeasance or malfeasance in office, etc. Effective Date: January 1, 2027

Current Committee of Reference: Senate Community Affairs

SB 1138 **Qualified Contractors** by Massullo, Jr.

Qualified Contractors; Requiring the governing body of a local government, by a specified date, to create a program that authorizes an applicant to use a qualified contractor to conduct preapplication review of an application; requiring the development services office of a local government to establish a registry of a specified number of qualified contractors to be used to conduct preapplication reviews; prohibiting a local government from enforcing any additional criteria for qualified contractors beyond what is authorized by the act; prohibiting local governments from creating or establishing additional regulations for the approval of a final plat, etc. Effective Date: 7/1/2026

Current Committee of Reference: Senate Community Affairs

HB 1139 **Impact Fees** by Gentry

Impact Fees: Defines "plan-based methodology"; revises provisions relating to intergovernmental coordination elements in comprehensive plans; requires interlocal agreements that coordinate mitigation of their respective transportation capacity impacts to use certain methodology; revises criteria local government, school district, or special district must meet to increase impact fee rates; defines "extraordinary circumstances." Effective Date: July 1, 2026

Current Committee of Reference: House Intergovernmental Affairs Subcommittee

HB 1143 **Local Government Land Development Regulations and Orders** by Nix, Jr.

Local Government Land Development Regulations and Orders: Revises, for counties & municipalities, respectively, application procedures for development permits & orders; prohibits local governments from adopting land development regulations governing lots on residential real property unless such adoption meets specified requirements; prohibits local governments from adopting certain land development regulations if lot on residential real property is connected to public water system or public sewer system; requires that land development regulations adopted by local government allow lots to front or abut shared space instead of public right-of-way; establishes cause of action; authorizes award of specified remedies; provides for waiver of sovereign immunity. Effective Date: July 1, 2026

Current Committee of Reference: House Intergovernmental Affairs Subcommittee

HB 1151 **Health Care Autonomy** by Driskell

Health Care Autonomy: Establishes fundamental right to reproductive health care; provides that every individual has fundamental right to make autonomous decisions about individual's own reproductive health; provides that individuals who become pregnant have fundamental right to make certain decisions in exercise of such right; prohibits state from denying or interfering with individual's right to access reproductive health care; prohibits state & local law enforcement agencies & officials from harassing or discriminating against individual for providing or obtaining reproductive health care or assisting another person in doing so; prohibits such state & local entities from penalizing, prosecuting, or otherwise taking adverse action against individual for exercising specified rights, or against individual for assisting another in exercising such rights; provides individuals with immunity from civil liability for

exercising specified rights or aiding or assisting another in exercising such rights; provides that fertilized egg, embryo, or fetus does not have independent rights under laws of this state; prohibits local units of government from regulating individual's ability to exercise right to reproductive health care in manner more restrictive than that set forth in specified provisions. Effective Date: effect upon becoming a law

Current Committee of Reference: House Health Professions & Programs Subcommittee

---

HB 1169 **Enforcement of the Florida Building Code** by Tramont

Enforcement of the Florida Building Code: Provides that local government is not eligible for additional state funds if it has been subject to legislative committee's audit within specified timeframe or if it fails to submit affirmation to legislative delegation; requires each legislative committee to report such local governments to presiding officers & appropriations chairs. Effective Date: July 1, 2026

Current Committee of Reference: House Intergovernmental Affairs Subcommittee

---

HB 1183 **Transportation Infrastructure Land Development Regulations** by Cross

Transportation Infrastructure Land Development Regulations: Requires governing body of county or municipality to adopt ordinance, & governing body of special district to adopt resolution, establishing specified transit-oriented development (TOD) zones & rural livable urban village (LUV) areas; requires local government to zone for mixed use, & authorize certain commercial uses for, lots within TOD zones & rural LUV areas; prohibits local government from imposing certain building regulations in specified TOD zones & rural LUV areas; prohibits reduction or elimination of TOD zones after establishment; prohibits local government from imposing certain regulations for lots that contain historic property; provides private cause of action; authorizes award of specified relief; provides that prevailing plaintiff is entitled to attorney fees & costs; provides waiver of sovereign immunity. Effective Date: July 1, 2026

Current Committee of Reference: House Intergovernmental Affairs Subcommittee

---

SB 1196 **Waste Facilities** by Sharief

Waste Facilities; Prohibiting a local government or the Department of Environmental Protection, respectively, from issuing a construction permit for certain solid waste disposal and waste-to-energy facilities under certain circumstances, etc. Effective Date: 7/1/2026

Current Committee of Reference: Senate Environment and Natural Resources

---

HB 1217 **Prohibited Governmental Policies Regulating Greenhouse Gas Emissions** by Snyder

Prohibited Governmental Policies Regulating Greenhouse Gas Emissions: Prohibits governmental entities from adopting certain net zero policies; prohibits governmental entities from using government funds in any manner that supports, implements, or advances certain net zero policies; prohibits governmental entities from imposing tax, fee, penalty, charge, offset, or assessment to advance certain net zero policies; requires each governmental entity to annually submit to Department of Revenue certain affidavit; prohibits governmental entities from implementing, administering, or enforcing certain programs. Effective Date: July 1, 2026

Current Committee of Reference: House Economic Infrastructure Subcommittee

---

SB 1220 **Transportation** by Massullo, Jr.

Transportation; Providing requirements for an infrastructure development and improvement component included in a port’s strategic plan; requiring the Department of Transportation to coordinate with the Department of Commerce, specified ports, and the Federal Government for a certain purpose; revising duties of the Department of Transportation relating to airport systems in this state; providing that the department serves as the primary point of contact for statewide topographic aerial LiDAR procurement and certain cost sharing, etc. Effective Date: July 1, 2026

Current Committee of Reference: Senate Transportation

HB 1227 **Preemption to the State** by Oliver

Preemption to the State: Prohibits counties, municipalities, & special districts, respectively, from substantially burdening free exercise of religion by adopting or enforcing certain ordinances, regulations, resolutions, rules, or other policies; prohibits local enforcement agency from denying issuance of certificate of occupancy to owner of residential or commercial property based on noncompliance with Florida-friendly landscaping ordinances; prohibits local enforcement agency from denying issuance of building permit for alteration, modification, or repair of single-family residential structure; prohibits local enforcement agency from requiring building permit for construction of playground equipment or fence on certain property; prohibits local governments from adopting or enforcing certain ordinances, regulations, resolutions, rules, charter provisions, or other policies or from taking any action to license or otherwise regulate mutual benefit corporations; revises criteria for business to be considered home-based business as it relates to local government regulation of parking. Effective Date: upon becoming a law

Current Committee of Reference: House Intergovernmental Affairs Subcommittee

SB 1234 **Building Permits and Inspections** by DiCeglie

Building Permits and Inspections; Providing for expiration of certain building permits issued by a county; requiring the Florida Building Commission to modify the Florida Building Code to exempt from building permit requirements the installation of certain walls or barriers; providing for expiration of certain building permits issued by a local government; revising definitions and defining terms; requiring certain services to be subject to an agreement, rather than a written contract, etc. Effective Date: July 1, 2026

Current Committee of Reference: Senate Community Affairs

HB 1251 **Expenditure of Public Funds by Local Governments** by Shoaf

Expenditure of Public Funds by Local Governments: Prohibits local governments from expending public funds for specified purposes; prohibits acceptance of public funds from local governments for lobbying; authorizes filing of complaints with Commission on Ethics alleging violations; requires commission to investigate & provide report of its findings to certain entities; requires commission to adopt rules. Effective Date: July 1, 2026

Current Committee of Reference: House Intergovernmental Affairs Subcommittee

HB 1275 **Prohibition on Levying Ad Valorem Taxes on Tangible Personal Property** by LaMarca

Prohibition on Levying Ad Valorem Taxes on Tangible Personal Property: Proposes amendment to State Constitution to prohibit levying of ad valorem taxes on tangible personal property by certain entities.

Current Committee of Reference: House Ways & Means Committee

HB 1277 **Prohibition on Levying Ad Valorem Taxes on Tangible Personal Property** by LaMarca

Prohibition on Levying Ad Valorem Taxes on Tangible Personal Property: Conforms provisions to proposed amendments made to State Constitution which prohibit levying ad valorem taxes on tangible personal property by counties, school districts, & municipalities; removes provisions relating to property appraiser's assessments & effect of determinations by value adjustment boards; repeals provisions relating to extending date for filing tangible personal property tax returns; repeals provisions relating to erroneous returns & estimates of assessment when no return is filed; repeals provisions relating to tax returns to show all exemptions & claims; repeals provisions relating to exemption of renewable energy source devices; repeals provisions relating to exemption for tangible personal property; repeals provisions relating to uncollectible personal property taxes & correction of tax roll; repeals provisions relating to attachment of tangible personal property in case of removal; provides transitional provision.

Effective Date: on the effective date of the amendment to the State Constitution proposed by HJR 1275 or a similar joint resolution having substantially the same specified intent and purpose

Current Committee of Reference: House Ways & Means Committee

HB 1303 **Department of Financial Services** by Miller

Department of Financial Services: Establishes Florida Agency for Fiscal Oversight within DFS; provides purpose & duties of agency; requires agency to conduct audit of certain local governments; authorizes agency to request certain information; provides penalties for noncompliance with such request; removes requirement that specified hotline be operated for certain amount of time each day; removes requirement that hotline be advertised in specified manner; requires specified employees to take certain training annually; requires first training be completed by specified deadline; requires certain employees who report information to Florida Agency for Fiscal Accountability be afforded same protection as whistle-blowers; prohibits local governments from executing certain documents with specified provisions; provides that such contracts are void; requires local governments submit certain report to DFS; requires counties to use certain contract tracking system. Effective Date: July 1, 2026

Current Committee of Reference: House Insurance & Banking Subcommittee

HB 1307 **Unauthorized Aliens** by Jacques

Unauthorized Aliens: Prohibits unauthorized aliens from receiving certain licensing or certification, financial assistance, & claim reimbursement; requires certain procedures, instruction, & testing to be conducted in English; prohibits alternate language accommodations; requires employers & licensees to verify employment eligibility & citizenship status, respectively, before taking certain actions; provides civil cause of action; provides penalties; authorizes certain complains; requires Office of Financial Regulation to conduct random audits; creates rebuttable presumption against unauthorized out-of-state drivers; provides exemptions & standard of proof; provides requirements for law enforcement officers, DHSMV, insurers, & OIR; provides administrative penalties; authorizes private cause of action; prohibits certain financial institutions from accepting certain forms of personal identification. Effective Date: upon becoming a law

Current Committee of Reference: House Commerce Committee

HB 1329 **Local Government Spending** by Benarroch

Local Government Spending: Requires posting of county & municipality budgets to allow members of public to download & review certain information & data in specified formats; requires certain officers to perform a specified exercise before final adoption of budget; prohibits local governments from expending public funds for purpose of diversity, equity, & inclusion; prohibits local governments from contracting with private vendors for services for promoting, advocating for, or providing training or education on diversity, equity, & inclusion; requires all local governments make specified certification to CFO by date certain each year; requires CFO to conduct specified evaluation; specifies that local governments that violate certain provisions are subject to administrative fines; requires such fines to be deposited in Insurance Regulatory Trust Fund. Effective Date: July 1, 2026

Current Committee of Reference: House Intergovernmental Affairs Subcommittee

SB 1342 **Transportation Infrastructure Land Development Regulations** by Rouson

Transportation Infrastructure Land Development Regulations; Citing this act as the “Transit-Oriented Development Act” or the “TOD Act”; requiring the governing body of a county or municipality to adopt an ordinance, and the governing body of a special district to adopt a resolution, establishing specified transit-oriented development (TOD) zones and rural livable urban village (LUV) areas by a certain date; prohibiting a local government from imposing certain building regulations in specified TOD zones and rural LUV areas; prohibiting the reduction or elimination of TOD zones after establishment; prohibiting a local government from imposing certain regulations for lots that contain historic property; providing a

waiver of sovereign immunity, etc. Effective Date: 7/1/2026 **Current Committee of Reference:** No Current Committee

SB 1366 **Claims Against the Government** by Brodeur

Claims Against the Government; Increasing the statutory limits on the liability of the state and its agencies and subdivisions for tort claims; requiring the Department of Financial Services, beginning on a specified date and every 5 years thereafter, to adjust the limitations of liability for claims; limiting attorney fees based on the amount of funds recovered; authorizing the Legislature to limit attorney fee awards in a claim bill or reserve any portion of the proceeds of a claim bill to the claimant, etc. Effective Date: 10/1/2026

Current Committee of Reference: No Current Committee

SB 1380 **Unauthorized Aliens** by Martin

Unauthorized Aliens; Prohibiting the Department of Financial Services from issuing a license or certification to unauthorized aliens; authorizing a county to require a borrower to provide proof of being lawfully present in the United States; authorizing the Division of Risk Management to approve or deny claims relating to a minor who is an unauthorized alien; requiring that certain procedures, instruction, and testing be conducted in English; prohibiting certain entities and corporations from providing down payment assistance to unauthorized aliens, etc. Effective Date: Upon becoming a law

Current Committee of Reference: No Current Committee

HB 1389 **Affordable Housing** by Redondo

Affordable Housing: Requires counties & municipalities, respectively, to authorize multifamily & mixeduse residential as allowable uses for specified parcels of land if certain conditions are met; requires counties & municipalities, respectively, to eliminate parking requirements for proposed development; authorizes board of county commissioners or governing body of municipality to exempt specified portions of property within multifamily projects & accessory dwelling units that are used to provide affordable housing. Effective Date: July 1, 2026

Current Committee of Reference: House Housing, Agriculture & Tourism Subcommittee

HB 1395 **Artificial Intelligence** by Rizo

Artificial Intelligence: Prohibits governmental entities from extending or renewing contract with specified entities; prohibits governmental entities from taking certain actions relating to contracting for AI technology, software, or products unless certain requirements are met; prohibits governmental entities from entering into contracts for AI technology, software, or products under certain conditions; provides rights of Floridians relating to AI use; requires consent for minors to create new or maintain existing companion chatbot platforms; requires companion chatbot platforms to make certain disclosures & institute certain measures to protect minors; prohibits AI technology companies from selling or disclosing personal information of users unless information is deidentified; prohibits commercial use of individual's name, image, or likeness created through AI without consent; provides for enforcement; provides for civil penalties & damages; provides for private causes of action. Effective Date: July 1, 2026

Current Committee of Reference: House Information Technology Budget & Policy Subcommittee

HB 1403 **Deferred Compensation Plans for Public Employees** by Salzman

Deferred Compensation Plans for Public Employees: Authorizes inclusion of automatic enrollment arrangement in government employee's deferred compensation plan; requires that automatic enrollment arrangement be established with default contribution rate; authorizes periodic reenrollment of specified government employees; authorizes periodic resetting of contribution rates for specified

government employees; requires that automatic enrollment arrangement provide employees ability to make certain elections regarding contributions; requires that plan provide for default investment into which contributions must be placed under specified circumstance; authorizes counties, municipalities, political subdivisions, & constitutional county officers to adopt automatic enrollment arrangements for specified deferred compensation programs; provides that deferred compensation plan of state may adopt automatic enrollment arrangement only upon approval of Legislature; requires that certain deduction of wages or salary of employees be treated in specified manner. Effective Date: July 1, 2026

Current Committee of Reference: House Government Operations Subcommittee

---

HB 1409 **THC** by Berfield

THC: Provides that marijuana testing laboratory may acquire hemp & hemp extract only from certain businesses; prohibits marijuana testing laboratory from selling, distributing, or transferring hemp or hemp extract from certain businesses; requires marijuana testing laboratory to separate marijuana received from certain entities from hemp or hemp extract received from certain entities; revises requirements for sale & distribution of hemp extract; prohibits businesses or food establishments from possessing hemp or hemp extract products that are attractive to children; prohibits unpermitted business sales, street sales, or festival sales of hemp extract; prohibits business permitted to sell hemp or hemp extract from being located in certain areas; provides requirements for businesses permitted to sell hemp or hemp extract; including THC-infused beverages in list of products prohibited for sale to person under 21 years of age; provides penalty for hemp extract possessed, manufactured, delivered, held, offered for sale, distributed, or sold by certain entities in violation of specified provisions. Effective Date: July 1, 2026

Current Committee of Reference: House Industries & Professional Activities Subcommittee

---

HB 1417 **Department of Environmental Protection** by LaMarca

Department of Environmental Protection: Repeals, revises, & creates various provisions relating to Environmental Regulation Commission; Acquisition & Restoration Council; central sewer system connections; wastewater treatment systems; aerobic treatment units; basin management action plans; type 2 transfer of Florida Communities Trust from DEP to Acquisition & Restoration Council; onsite sewage treatment & disposal system reports & permits; air pollution permits & license fees; small community sewer construction grants; wastewater services; & fertilizer inspection fees. Effective Date: July 1, 2026

Current Committee of Reference: House Natural Resources & Disasters Subcommittee

---

SB 1420 **Local Utility Revenues** by DiCeglie

Local Utility Revenues; Prohibiting counties and municipalities, respectively, from transferring for specified purposes revenues collected from providing utility services; requiring revenue surpluses to be returned to the ratepayers; requiring county and municipal utilities, respectively, to develop budget forecasts and strategies that meet certain requirements; prohibiting counties and municipalities, respectively, from charging a higher rate or adding a surcharge to certain customers, etc. Effective Date: 7/1/2026

Current Committee of Reference: No Current Committee

SB 1444 **Preemption to the State** by Martin

Preemption to the State; Providing for preemption of all matters relating to the regulation of religious services and gatherings; prohibiting counties, municipalities, and special districts, respectively, from substantially burdening the free exercise of religion by adopting or enforcing certain ordinances, regulations, resolutions, rules, or other policies; prohibiting a local enforcement agency from denying the issuance of a certificate of occupancy to an owner of residential or commercial structure based on noncompliance with Florida-friendly landscaping ordinances in certain circumstances; waiving sovereign immunity in accordance with specified laws, etc. Effective Date: Upon becoming a law

Current Committee of Reference: No Current Committee

HB 1451 **Utility Services** by Busatta

Utility Services: Requires certain public meetings as condition precedent to effectiveness of new or extended agreement under which municipality will provide specified utility services in other municipalities or unincorporated areas; limits portion of certain utility revenues that municipality may use to fund or finance general government functions; requires excess revenues to be reinvested into municipal utility or returned to customers; requires municipalities that provide specified utility services to report certain information by specified date, & annually thereafter, to PSC; requires PSC to compile such information & submit report by specified date, & annually thereafter, to Governor & Legislature. Effective Date: July 1, 2027

Current Committee of Reference: House Economic Infrastructure Subcommittee

HB 1465 **Restrictions on Local Government Regulations After a Hurricane** by Andrade

Restrictions on Local Government Regulations After a Hurricane: Revises circumstances under which certain land use regulations may be enforced; revising persons authorized to bring certain civil actions; requires certain pending applications to be processed in a specified manner. Effective Date: July 1, 2026

Current Committee of Reference: House Intergovernmental Affairs Subcommittee

SB 1506 **Civil Litigation** by Yarborough

Civil Litigation; Revising the criteria that the court must consider in determining whether an award of money damages is excessive or inadequate, etc. Effective Date: 7/1/2026

Current Committee of Reference: No Current Committee

SB 1510 **Department of Environmental Protection** by Massullo, Jr.

Department of Environmental Protection; Deleting provisions creating the Environmental Regulation Commission; requiring that residential properties of a specified size located in a certain area connect to a central sewer system or upgrade to a specified type of nutrient-reducing wastewater treatment system; providing that remediation plans for certain properties may not prohibit or require certain actions relating to onsite sewage treatment and disposal systems; providing for a type 2 transfer of powers and functions of the Florida Communities Trust from the department to the Acquisition and Restoration
Council; revising legislative findings and intent for the Florida Communities Trust, etc. Effective Date: 7/1 /2026

Current Committee of Reference: No Current Committee

SB 1548 **Affordable Housing** by Calatayud

Affordable Housing; Requiring counties and municipalities, respectively, to authorize certain residential use on property owned by a county, municipality, or school district under certain circumstances; revising the definition of the term “person”; revising a prohibition on discriminatory practices in land use decisions and in permitting of development to include housing that is affordable; waiving the state’s sovereign immunity for certain causes of action based upon housing discrimination, etc. Effective Date: 7/1/2026

Current Committee of Reference: No Current Committee

HB 1553 **Evidence of Damages to Prove or Rebut Medical Expenses in Personal Injury or Wrongful Death Actions** by Brackett

Evidence of Damages to Prove or Rebut Medical Expenses in Personal Injury or Wrongful Death Actions: Revises provisions relating to evidence that is admissible to demonstrate past & future medical expenses in personal injury & wrongful death actions. Effective Date: upon becoming a law

Current Committee of Reference: House Civil Justice & Claims Subcommittee

---

SB 1558 **Admissible Evidence in Personal Injury or Wrongful Death Actions** by Massullo, Jr.

Admissible Evidence in Personal Injury or Wrongful Death Actions; Providing that evidence admissible in personal injury or wrongful death actions may be used for rebutting, as well as for proving, the amount of certain damages; providing that such evidence may be offered by any party, etc. Effective Date: 7/1/2026

Current Committee of Reference: No Current Committee

SB 1566 **Local Government Spending** by DiCeglie

Local Government Spending; Citing this act as the “Local Government Financial Transparency and Accountability Act”; revising the timeframe during which tentative budgets, and the length of time for which final budgets, must be posted on county websites; revising the timeframe during which a public hearing for an amendment to a county budget must be advertised; prohibiting a local government from expending public funds for the purpose of diversity, equity, and inclusion; requiring the Chief Financial Officer to conduct a specified evaluation, etc. Effective Date: 7/1/2026

Current Committee of Reference: No Current Committee

SB 1572 **Department of Financial Services** by DiCeglie

Department of Financial Services; Establishing the Florida Agency for Fiscal Oversight within the Department of Financial Services; requiring local governments to notify the agency after authorizing specified referenda; deleting a requirement that a specified hotline be operated for a certain amount of time each day; requiring specified employees to take a certain training annually; requiring that certain employees who report information to the Florida Agency for Fiscal Oversight be afforded the same protection as whistle-blowers, etc. Effective Date: 7/1/2026

Current Committee of Reference: No Current Committee

SB 1608 **Assessment of Property with Decreasing Just Valuation** by Polsky

Assessment of Property with Decreasing Just Valuation; Prohibiting increases in certain assessed valuations if the just value of the property has decreased since the previous assessment, etc. Effective Date: On the effective date of the amendment to the State Constitution proposed by SJR 1610 or a similar joint resolution having substantially the same specific intent and purpose, if such amendment to the State Constitution is approved at the next general election or at an earlier special election specifically authorized by law for that purpose

Current Committee of Reference: No Current Committee

SB 1610 **Assessment of Property with Decreasing Just Valuation** by Polsky

Assessment of Property with Decreasing Just Valuation; Proposing amendments to the State Constitution to prohibit an increase in the value of certain assessments for property with a decreasing just valuation and to provide an effective date, etc.

Current Committee of Reference: No Current Committee

SB 1612 **Electronic Payments to Local Governments** by DiCeglie

Electronic Payments to Local Governments; Revising legislative intent; requiring each unit of local government to accept electronic payment online for payments received by and financial obligations owed to the unit of local government, etc. Effective Date: 7/1/2026

Current Committee of Reference: No Current Committee

SB 1614 **Florida Building Code** by Leek

Florida Building Code; prohibiting a local government from receiving state funds through a local funding initiative request to its legislative designation unless it has expended all funds through enforcing the Florida Building Code on authorized uses and does not have excess funds; providing that a local government is not eligible for additional state funds if it has been subject to a legislative committee's audit within a specified timeframe or if it fails to submit an affirmation to its legislative delegation, etc. Effective Date: 7/1/2026

Current Committee of Reference: No Current Committee

SB 1628 **Net-zero Policies by Governmental Entities** by Ávila

Net-zero Policies by Governmental Entities; Prohibiting governmental entities from adopting or requiring the adoption of net-zero policies; prohibiting governmental entities from expending government funds to support, implement, or advance net-zero policies; prohibiting governmental entities from imposing taxes, fees, penalties, charges, offsets, or assessments to advance net-zero policies; prohibiting governmental entities from implementing, administering, or enforcing a program that functions as a cap-and-trade program, etc. Effective Date: July 1, 2026

Current Committee of Reference: No Current Committee

SB 1662 **Prohibited Preferences** by McClain

Prohibited Preferences; Prohibiting executive agencies from using racial or gender set-asides, preferences, or quotas when making certain decisions; revising factors local governments are authorized to consider in making decisions regarding local bids and contracts for public construction works; revising the criteria each agency uses to evaluate professional services; deleting a provision requiring consideration of minority and gender representation when making appointments to the statewide advisory board for the Florida Small Business Development Center Network; deleting provisions requiring that preferences be given to specified entities seeking to attract minority conventions to Florida, etc. Effective Date: 7/1/2026

Current Committee of Reference: No Current Committee

SB 1724 **Utility Services** by Martin

Utility Services; Requiring certain public meetings as a condition precedent to the effectiveness of a

new or extended agreement under which a municipality will provide specified utility services in other municipalities or unincorporated areas; limiting the portion of certain utility revenues which a municipality may use to fund or finance general government functions; revising provisions relating to permissible rates, fees, and charges imposed by municipal water and sewer utilities on customers located outside the municipal boundaries; requiring municipalities that provide specified utility services to report certain information by a specified date, and annually thereafter, to the Florida Public Service Commission, etc. Effective Date: Except as otherwise expressly provided in this act, this act shall take effect July 1, 2026

Current Committee of Reference: No Current Committee

SB 1726	**Housing** by Smith

Housing; Citing this act as the “Real Affordable Housing Relief Act”; deleting provisions prohibiting municipalities, counties, or other entities of local government from adopting or maintaining certain laws relating to rent control; authorizing counties and municipalities to create community land bank programs for a certain purpose; providing requirements for the sale of certain property to land banks; providing conditions for the subsequent resale of property acquired by land banks; requiring the Department of Financial Services to adopt a home resiliency grading scale for a specified purpose; creating the Affordable Housing Construction Loan Program for a certain purpose, etc. Effective Date: July 1, 2026

Current Committee of Reference: No Current Committee

Generated 1/16/2026 06:59 AM

III. 2026.01.23 - The Village of Palmetto Bay Weekly Bill Report

The Village of Palmetto Bay
Ordered by Bill Number

HB 0037	**Removal, Storage, and Cleanup of Electric Vehicles** by Nix, Jr.

Removal, Storage, and Cleanup of Electric Vehicles: Requires counties to establish daily administration fee for proper storage of certain electric vehicles; authorizes municipalities to establish daily administration fee for proper storage of certain electric vehicles; provides maximum amount for such fees; defines "daily administration fee" & "proper storage"; provides that motor vehicle insurers are not required to pay certain costs; provides that reasonable fee for service includes any daily administration fee. Effective Date: July 1, 2026

Current Committee of Reference: House State Affairs Committee

SB 0044	**Electronic Payment of Public Records Fees** by Rouson

Electronic Payment of Public Records Fees; Requiring an agency subject to ch. 119, F.S., to provide an electronic option for payment of fees associated with a public records request, etc. Effective Date: July 1, 2026

Current Committee of Reference: Senate Governmental Oversight and Accountability

SB 0048	**Housing** by Gaetz

Housing; Defining the terms “by right” and “primary dwelling unit”; requiring, rather than authorizing, local governments to adopt, by a specified date, an ordinance to allow accessory dwelling units by right in certain areas; requiring the Office of Program Policy Analysis and Government Accountability to evaluate the efficacy of using mezzanine finance and the potential of tiny homes for specified purposes, etc. Effective Date: 7/1/2026

Current Committee of Reference: Senate Rules

HB 0067	**Reduction of Annual Assessment Increases for Homestead Property** by Holcomb

Reduction of Annual Assessment Increases for Homestead Property: Proposes State Constitutional amendment reducing maximum amount that homestead property’s assessed value may increase annually.

Current Committee of Reference: No Current Committee

HB 0071 **Distribution of Funds to Homestead Property Owners** by Holcomb

Distribution of Funds to Homestead Property Owners: Creates Homestead Property Tax Relief Program within DFS; defines “eligible homesteader”; requires CFO to annually issue warrants of specified amount to certain homestead property owners beginning & ending on specified dates; requires CFO to work with county property appraisers for specified purpose; provides future repeal. Effective Date: July 1, 2026

Current Committee of Reference: No Current Committee

SB 0092 **Employee Protections** by Gaetz

Employee Protections; Providing that public officers, public employees, and local government attorneys commit a breach of the public trust when they initiate adverse personnel actions against specified agency employees or independent contractors under certain circumstances; prohibiting agencies and independent contractors from taking specified actions against employees or certain persons for disclosing certain information to the Commission on Ethics; requiring that information disclosed include specified violations or alleged violations; providing that specified provisions protect employees and persons who submit written complaints to the commission or provide information to an investigator during an investigation of a complaint or referral, etc. Effective Date: 1/1/2027

Current Committee of Reference: Senate Rules

HB 0101 **Utility Terrain Vehicles** by Gentry

Utility Terrain Vehicles: Authorizes utility terrain vehicle (UTV) to be operated during all hours; authorizes operation of UTVs on certain roadways & on certain parts of State Highway System; authorizes DOT to prohibit use of UTVs under certain circumstances; authorizes persons possessing certain licenses to operate UTV; requires owners or operators of UTV to comply with certain requirements & regulations; authorizes county or municipality to restrict operation of UTVs under certain circumstances; provides civil penalties; requires DHSMV to issue license plate to owner or lessee of vehicle registered as UTV upon payment of certain taxes & fees; requires that license plates for UTVs comply with specified provisions. Effective Date: January 1, 2027

Current Committee of Reference: House Government Operations Subcommittee

HB 0103 **Local Business Taxes** by Botana

Local Business Taxes: Repeals provisions related to local business taxes & authorizes certain municipalities to continue to impose business taxes. Effective Date: July 1, 2026

Current Committee of Reference: House State Affairs Committee

HB 0105 **Local Government Enforcement Actions** by Brackett

Local Government Enforcement Actions: Prohibits certain enforcement actions by counties, municipalities, & special districts; authorizes persons or business entities subject to such actions to submit request for review; requires counties, municipalities, & special districts to review such actions & respond within specified time period; authorizes filing of legal action & provides legal remedies; provides for certain protections from retaliation; provides for preemption. Effective Date: October 1, 2026

Current Committee of Reference: House Intergovernmental Affairs Subcommittee

SB 0118 **Assessments Levied on Recreational Vehicle Parks** by Truenow

Assessments Levied on Recreational Vehicle Parks; Providing that certain special assessments on recreational vehicle parks levied by counties, municipalities, and special districts, respectively, may not be levied against a certain portion of a recreational vehicle parking space or campsite; requiring

counties, municipalities, and special districts, respectively, to consider a recreational vehicle park's occupancy rates for a certain purpose, etc. Effective Date: Upon becoming a law

Current Committee of Reference: Senate Finance and Tax

SB 0122 **Local Business Taxes** by Truenow

Local Business Taxes; Repealing provisions relating to local business taxes; authorizing certain municipalities to continue to impose a business tax; authorizing such municipalities to revise the definition of the term "merchant" in a specified manner, etc. Effective Date: 7/1/2026

Current Committee of Reference: Senate Finance and Tax

HB 0139 **Adverse Personnel Actions and Ethics Complaints** by Maney

Adverse Personnel Actions and Ethics Complaints: Prohibits agencies & independent contractors from taking specified actions against employees for disclosing certain information to Commission on Ethics; requires that information disclosed include specified violations or alleged violations; requires disclosure of specified information to commission; provides that specified provisions protect employees & persons who submit written complaints to commission or provide information to investigator during investigation of complaint; authorizes certain employees or applicants for employment to file complaints in accordance with specified provisions; authorizes such employees or applicants to pursue specified administrative remedy or civil action within specified timeframe; authorizes local public employees to file complaint with appropriate local governmental authority; specifies requirements for administrative procedures created by local governmental authorities; authorizes such employee to bring civil actions in court of competent jurisdiction under specified conditions; requires specified relief; provides that it is affirmative defense to certain actions that adverse personnel action was predicated on grounds other than exercising of certain protected rights; requires commission to deliver complaints & any amendment thereto to agency conducting certain investigation, upon agency's written request; requires commission to deliver complaints & any amendment thereto to certain persons upon notarized written request. Effective Date: July 1, 2026

Current Committee of Reference: House Government Operations Subcommittee

---

HB 0145 **Suits Against the Government** by McFarland

Suits Against the Government: Increases statutory limits on liability for tort claims against state & its agencies & subdivisions; authorizes subdivision of state to settle claim in excess of statutory limit without legislative action regardless of insurance coverage limits; prohibits insurance policy from conditioning benefits on enactment of claim bill; specifies that limitations in effect on date claim accrues apply to that claim; revises period within which certain claims must be presented; revises exceptions relating to instituting tort claims against state or agencies or subdivisions; revises period after which failure of certain entities to make final disposition of claim shall be deemed final denial of claim for certain purposes; revises statute of limitations for tort claims against state or agencies or subdivisions & exceptions thereto. Effective Date: October 1, 2026

Current Committee of Reference: No Current Committee

HB 0149 **Maximum Millage Rates for the 2027-2028 Fiscal Year** by Chamberlin

Maximum Millage Rates for the 2027-2028 Fiscal Year: Provides method for determining the maximum county & school millage rates for fiscal year 2027-2028; provides for future repeal. Effective Date: July 1, 2026

Current Committee of Reference: House Select Committee on Property Taxes

---

HB 0201 **Elimination of Non-school Property Tax for Homesteads** by Steele

Elimination of Non-school Property Tax for Homesteads: Proposes amendment to State Constitution to exempt homestead property from all ad valorem taxation other than school district levies, prohibit counties and municipalities from reducing total funding for law enforcement, and provide an effective date.

Current Committee of Reference: House Ways & Means Committee

HB 0203 **Phased Out Elimination of Non-school Property Tax for Homesteads** by Miller

Phased Out Elimination of Non-school Property Tax for Homesteads: Proposes amendment to State Constitution to increase exemption for homestead property from all ad valorem taxation other than school district levies annually for 10 years by a certain amount, to make homestead property exempt from all ad valorem taxation other than school district levies beginning in a specified year, to prohibit local governments from reducing total funding for services provided by law enforcement, firefighters, and other first responders, and provide an effective date. Effective Date: January 1, 2027

Current Committee of Reference: House Ways & Means Committee

HB 0205 **Elimination of Non-School Property Tax for Homesteads for Persons Age 65 or Older** by Porras

Elimination of Non-School Property Tax for Homesteads for Persons Age 65 or Older: Proposes amendment to State Constitution to exempt homestead property from all levies other than school district levies for persons who have attained age 65, prohibit counties and municipalities from reducing total funding for law enforcement, and provide an effective date.

Current Committee of Reference: House Ways & Means Committee

HB 0207 **Assessed Home Value Homestead Exemption of Non-school Property Tax** by Abbott

Assessed Home Value Homestead Exemption of Non-school Property Tax: Proposes amendment to State Constitution to add a homestead exemption for levies other than school levies equal to 25 percent of the remaining assessed value after applying existing exemptions, provide construction, prohibit counties and municipalities from reducing total funding for law enforcement, and provide an effective date.

Current Committee of Reference: House State Affairs Committee

---

SB 0208 **Land Use and Development Regulations** by McClain

Land Use and Development Regulations; Requiring that the amount of certain application fees reasonably relate to certain costs; requiring that local government comprehensive plans and land development regulations include factors for assessing the compatibility of certain residential uses; prohibiting a local government from denying certain applications on compatibility grounds if the applicant has proposed certain measures; requiring that the denial of an application specify certain information; providing that a local government’s approval of an application may include certain requirements or conditions, etc. Effective Date: 7/1/2026

Current Committee of Reference: Senate Rules

HB 0209 **Property Insurance Relief Homestead Exemption Non-school Property Tax** by Busatta

Property Insurance Relief Homestead Exemption Non-school Property Tax: Proposes amendment to State Constitution to increase by $200,000 the exemption for homestead property from all ad valorem taxation other than school district levies for homestead properties that have property insurance, to prohibit local governments from reducing total funding for first responders, and to provide an effective date. Effective Date: Not Specified

Current Committee of Reference: No Current Committee

HB 0211 **Accrued Save-Our-Homes Property Tax Benefit for Non-school Property Tax** by Overdorf

Accrued Save-Our-Homes Property Tax Benefit for Non-school Property Tax: Proposes amendment to State Constitution to increase the maximum value of the accrued Save-Our-Homes benefit which may be transferred to a new homestead for all levies other than school district levies, prohibit counties and municipalities from reducing total funding for law enforcement, and provide an effective date.

Current Committee of Reference: House Ways & Means Committee

HB 0213 **Modification of Limitations on Property Assessment Increases** by Griffitts Jr.

Modification of Limitations on Property Assessment Increases: Proposes amendment to State Constitution to modify limitations on assessment increases for both homestead and nonhomestead property, prohibit local governments from reducing total funding for services provided by law enforcement, firefighters, and other first responders, and provide an effective date. Effective Date: January 1, 2027

Current Committee of Reference: House State Affairs Committee

---

HB 0215 **Ad Valorem Taxation** by Albert

Ad Valorem Taxation: Revises Save-Our-Homes portability benefits available to married persons establishing joint homestead; prohibits increase in prior year's adopted millage rate from going into effect unless approved by specified vote; authorizes DOR to adopt emergency rules; provides for future expiration. Effective Date: January 1, 2027

Current Committee of Reference: House State Affairs Committee

---

HB 0217 **Land Use Regulations** by Abbott

Land Use Regulations: Defines "impacted local government"; provides for retroactive application. Effective Date: July 1, 2026

Current Committee of Reference: House Intergovernmental Affairs Subcommittee

---

SB 0218 **Land Use Regulations** by Gaetz

Land Use Regulations; Defining the term "impacted local government", etc. Effective Date: July 1, 2026

Current Committee of Reference: Senate Community Affairs

HB 0225 **Consumer Fairness in Utility Rates** by Robinson, F.

Consumer Fairness in Utility Rates: Requires certain municipalities to impose same utility rates, fees, & charges on consumers within its municipal boundaries & boundaries of recipient municipality; prohibits such municipalities from imposing surcharges on consumers within boundaries of recipient municipality unless certain conditions are met; prohibits certain use of such surcharges; requires such municipalities to hold certain public hearings; requires certain municipalities to file specified reports with PSC; requires PSC to review certain consumer disputes & make certain determinations. Effective Date: July 1, 2026

Current Committee of Reference: House Economic Infrastructure Subcommittee

---

HB 0227 **Eligibility of Leasehold Interests for Homestead Exemptions** by Maney

Eligibility of Leasehold Interests for Homestead Exemptions: Revises circumstances under which persons may be deemed to have legal or beneficial & equitable title to certain property for homestead exemption purposes. Effective Date: upon becoming a law

Current Committee of Reference: House State Affairs Committee

HB 0239 **Standards for Storm Water Systems** by Grow

Standards for Storm Water Systems: Requires storm water systems in counties & municipalities, respectively, to comply with specified DOT standards; provides inspection requirements for such systems; specifies that certain local standards are superseded; provides finding of important state interest. Effective Date: July 1, 2026

Current Committee of Reference: House Intergovernmental Affairs Subcommittee

---

SB 0240 **Auxiliary Containers** by García

Auxiliary Containers; Preempting the regulation of auxiliary containers to the state; providing exceptions; requiring the Department of Environmental Protection to develop a uniform ordinance for the use and disposition of single-use, nonrecyclable auxiliary containers; prohibiting the sale or distribution of certain single-use auxiliary containers on lands managed by the Division of Recreation and Parks of the Department of Environmental Protection; repealing a provision relating to the regulation of polystyrene products preempted to the Department of Agriculture and Consumer Services, etc. Effective Date: 7/1/2026

Current Committee of Reference: Senate Appropriations Committee on Agriculture, Environment, and General Government

---

HB 0243 **Electric Bicycles** by Benarroch

Electric Bicycles: Provides requirements for operation of electric bicycles; provides penalties; creates Electric Bicycle Safety Task Force adjunct to DHSMV & provides requirements therefor; requires certain reports to Governor & Legislature by specified dates. Effective Date: upon becoming a law

Current Committee of Reference: House Government Operations Subcommittee

---

SB 0260 **Removal, Storage, and Cleanup of Electric Vehicles** by Burgess

Removal, Storage, and Cleanup of Electric Vehicles; Requiring counties to establish a daily administration fee for the proper storage of certain electric vehicles; providing a maximum amount for such fees; providing applicability; defining the terms “daily administration fee” and “proper storage”; providing that motor vehicle insurers are not required to pay certain costs, etc. Effective Date: July 1, 2026

Current Committee of Reference: Senate Transportation

HB 0263 **Public Records** by Rizo

Public Records: Provides exemption from public records requirements for personal identifying & location information of current county administrators, deputy county administrators, assistant county administrators, city managers, deputy city managers, & assistant city managers, including names & personal identifying & location information of their spouses & children; provides for future legislative review & repeal; provides for retroactive application; provides statement of public necessity. Effective Date: July 1, 2026

Current Committee of Reference: House Intergovernmental Affairs Subcommittee

---

HB 0267 **Local Housing Assistance Plans** by Stark

Local Housing Assistance Plans: Authorizes county or eligible municipality to expend certain funds on lot rental assistance for mobile home owners for specified time period; requires counties & eligible municipalities to develop certain strategies in their local housing assistance plans; provides that lot rental assistance is approved home ownership activity for certain purposes; authorizes certain funds to be provided to mobile home owners for rehabilitation & emergency repairs; removes prohibition that

only certain percentage of funds may be used for manufactured housing. Effective Date: July 1, 2026
Current Committee of Reference: House Commerce Committee

SB 0270 **Homestead Property Exemption for Persons Age 65 or Older** by Bernard

Homestead Property Exemption for Persons Age 65 or Older; Proposing an amendment to the State Constitution to exempt homestead property from all levies other than school district levies for persons who have attained age 65, prohibit counties and municipalities from reducing total funding for law enforcement, etc.

Current Committee of Reference: Senate Finance and Tax

SB 0272 **Homestead Exemption for Persons 65 and Older** by Bernard

Homestead Exemption for Persons 65 and Older; Expanding the homestead exemption for persons 65 years and older to include a total exemption of homestead property from ad valorem taxation, other than for school district levies, for certain persons whose household income does not exceed a certain amount; authorizing the Department of Revenue to adopt emergency rules, etc. Effective Date: On the effective date of the amendment to the State Constitution proposed by SJR 270 or a similar joint resolution having substantially the same specific intent and purpose, if such amendment to the State Constitution is approved at the next general election or at an earlier special election specifically authorized by law for that purpose

Current Committee of Reference: Senate Finance and Tax

SB 0274 **Homestead Property Tax Benefits for Long-term Owners** by Bernard

Homestead Property Tax Benefits for Long-term Owners; Proposing amendments to the State Constitution to provide that the assessed value of homestead property may not increase after 20 years of ownership and residency, to provide an additional homestead tax exemption equal to 50 percent of the assessed value of property, other than school district levies, for persons who have owned and resided on the property as their permanent residence for 30 years or more, and to provide an effective date, etc.

Current Committee of Reference: Senate Finance and Tax

SB 0276 **Homestead Property Tax Benefits For Long-term Owners And Permanent Residents** by Bernard

Homestead Property Tax Benefits for Long-term Owners and Permanent Residents; Requiring that certain property be assessed at less than just value when the person who owns the property has owned and used the property as his or her permanent residence for a specified timeframe; providing that the assessed value of such property shall be a certain amount and may not be increased under certain circumstances; specifying a homestead exemption for certain long-term owners and residents; authorizing periods of ownership and residency to be aggregated, etc. Effective Date: On the effective date of the amendment to the State Constitution proposed by SJR 274 or a similar joint resolution having substantially the same specific intent and purpose, if such amendment to the State Constitution is approved at the next general election or at an earlier special election specifically authorized by law for that purpose

Current Committee of Reference: Senate Finance and Tax

SB 0278 **Limitation on the Assessed Value of New Homestead Property** by Bernard

Limitation on the Assessed Value of New Homestead Property; Proposing amendments to the State Constitution to limit the assessed value of new homestead property established after a change of ownership which had an assessed value of less than a certain amount to no more than 150 percent of the assessed value of the property for the preceding year for ad valorem taxation purposes and to provide an effective date, etc.

Current Committee of Reference: Senate Finance and Tax

SB 0280 **Assessment of Homestead Property** by Bernard

Assessment of Homestead Property; Limiting the assessed value upon change of ownership of homestead property having a prior assessed value below a certain amount when the person acquiring the property is entitled to a homestead exemption, etc. Effective Date: On the effective date of the amendment to the State Constitution proposed by SJR 278 or a similar joint resolution having substantially the same specific intent and purpose, if such amendment is approved at the next general election or at an earlier special election specifically authorized by law for that purpose

Current Committee of Reference: Senate Finance and Tax

SB 0282 **Limitation on the Assessed Value of Property Owned and Used for Commercial Purposes by Small Businesses** by Bernard

Limitation on the Assessed Value of Property Owned and Used for Commercial Purposes by Small Businesses; Proposing amendments to the State Constitution to limit the assessed value of real property owned and used for commercial purposes by a small business for ad valorem taxation purposes so that such assessed value may not exceed 3 percent or the percentage change in the Consumer Price Index, whichever is lower, and to provide an effective date, etc.

Current Committee of Reference: Senate Finance and Tax

SB 0286 **Assessment of Changes, Additions, or Improvements to Homestead Properties** by Bernard

Assessment of Changes, Additions, or Improvements to Homestead Properties; Revising the manner of assessing the value of changes, additions, or improvements to homestead property, etc. Effective Date: 7/1/2026

Current Committee of Reference: Senate Finance and Tax

SB 0290 **Department of Agriculture and Consumer Services** by Truenow

Department of Agriculture and Consumer Services; Prohibiting counties from enacting or enforcing any law that restricts or prohibits the use of gasoline-powered farm equipment or gasoline-powered landscape equipment or that distinguishes such equipment from any other equipment under certain circumstances; prohibiting an application for a development on an ecologically significant parcel in a lowdensity municipality from being administratively approved without an attestation provided by the developer; establishing the Florida Food Animal Veterinary Medicine Loan Repayment Program; revising the Florida Forest Service’s powers, authority, and duties, etc. Effective Date: 7/1/2026

Current Committee of Reference: Senate Rules

HB 0313 **Housing** by Nix, Jr.

Housing: Requires, rather than authorizing, local governments to adopt, by specified date, ordinance to allow accessory dwelling units in certain areas; requires that such ordinances apply prospectively; prohibits inclusion of certain requirements or prohibitions in such ordinances; removes requirement that application for building permit to construct accessory dwelling unit include certain affidavit; revises accessory dwelling units that apply toward satisfying certain component of local government's comprehensive plan; prohibits denial of homestead exemption for certain portions of property on specified basis; requires that rented accessory dwelling unit be assessed separately from homestead property & taxed according to its use; authorizes local government to provide density bonus incentive to landowners who make certain real property donations to assist in provision of affordable housing for military families; requires OPPAGA to evaluate efficacy of using mezzanine finance & potential of tiny homes for specified purposes; requires office to consult with certain entities; requires office to submit certain report to Legislature by specified date. Effective Date: July 1, 2026

Current Committee of Reference: House Intergovernmental Affairs Subcommittee

HB 0323 **Parking on Public Property** by Steele

Parking on Public Property: Defines "public property" & "publicly owned buildings or facilities"; requires local governments to refund owners of vehicles who pay fees to park on specified public property in certain circumstances; requires local governments to carry over any unused portion of time for benefit of next vehicle owner who pays fee to park on such public property in certain circumstances; prohibits certain vehicles from being towed or issued traffic citation for specified time period after being parked on specified public property; prohibits local governments from allowing private business entities or enterprises to use specified public property for private parking purposes for fee. Effective Date: July 1, 2026

Current Committee of Reference: House Intergovernmental Affairs Subcommittee

SB 0332 **Public Meetings** by Bradley

Public Meetings; Providing that specified entities may meet in private with their attorneys to discuss certain claims concerning private property rights; requiring that such meetings be transcribed; providing that such transcripts become public records at specified times, etc. Effective Date: 7/1/2026

Current Committee of Reference: Senate Judiciary

HB 0337 **Food Insecure Areas** by Rayner

Food Insecure Areas: Authorizes local government to enact land development regulations to permit land use for small-footprint grocery store located in food insecure area; authorizes local government to include in its comprehensive plan provision permitting land use for small-footprint grocery store located in food insecure area; authorizes local government to require mandatory reporting of certain information from small-footprint grocery store. Effective Date: July 1, 2026

Current Committee of Reference: House Housing, Agriculture & Tourism Subcommittee

HB 0347 **Adoption and Display of Flags by Governmental Entities** by Borrero

Adoption and Display of Flags by Governmental Entities: Prohibits governmental entity from displaying, placing, or causing to be placed certain flags on real property; specifies flags governmental entity may display on such property; provides requirements for governmental entity that displays flag of United States; prohibits local government from adopting certain ordinances or regulations relating to flag of local government; provides that certain ordinances & regulations are void. Effective Date: July 1, 2026

Current Committee of Reference: House Government Operations Subcommittee

SB 0356 **Utility Terrain Vehicles** by Wright

Utility Terrain Vehicles; Authorizing the operation of a utility terrain vehicle (UTV) during all hours; authorizing the operation of UTVs on certain roadways; authorizing the Department of Transportation to prohibit the operation of UTVs under certain circumstances; requiring owners or operators of a UTV to comply with certain requirements and regulations, etc. Effective Date: January 1, 2027

Current Committee of Reference: Senate Appropriations Committee on Transportation, Tourism, and Economic Development

SB 0382 **Electric Bicycles** by Truenow

Electric Bicycles; Providing requirements for the operation of electric bicycles; prohibiting the operation of an electric bicycle above a certain speed under certain circumstances; creating the Electric Bicycle

Safety Task Force adjunct to the Department of Highway Safety and Motor Vehicles; requiring the Florida Highway Patrol and each police department and sheriff's office to maintain a certain list, beginning on a certain date, etc. Effective Date: Except as otherwise provided in this act, this act shall take effect upon becoming a law

Current Committee of Reference: Senate Appropriations Committee on Transportation, Tourism, and Economic Development

---

HB 0399 **Land Use and Development Regulations** by Borrero

Land Use and Development Regulations: Prohibits local governments from adopting certain local land development regulations; establishes requirements for certain local land development regulations that impose fee, charge, or exaction; declares certain local land development regulations null & void; requires OPPAGA to perform study to identify effect of removing Urban Development Boundary or similar boundaries in Miami-Dade County and other counties; requiring OPPAGA to submit specified report to Legislature by specified date. Effective Date: July 1, 2026

Current Committee of Reference: House Intergovernmental Affairs Subcommittee

---

HB 0425 **Historic Cemeteries Program** by Aristide

Historic Cemeteries Program: Requires local governments to approve applications from historic African-American cemeteries to change land use category & zoning district of excess vacant land under certain conditions. Effective Date: July 1, 2026

Current Committee of Reference: House Intergovernmental Affairs Subcommittee

---

SB 0426 **Adoption and Display of Flags by Governmental Entities** by Yarborough

Adoption and Display of Flags by Governmental Entities; Prohibiting a governmental entity from displaying, placing, or causing to be placed certain flags on real property; providing a penalty; specifying flags a governmental entity may display on such property; prohibiting a local government from adopting certain ordinances or regulations relating to the flag of the local government, etc. Effective Date: 7/1 /2026

Current Committee of Reference: Senate Governmental Oversight and Accountability

---

HB 0433 **Department of Agriculture and Consumer Services** by Alvarez, D.

Department of Agriculture and Consumer Services: Prohibits counties & municipalities from enacting or enforcing any law that restricts or prohibits use of gasoline-powered farm equipment or gasolinepowered landscape equipment or that distinguishes such equipment from any other equipment; requires Acquisition & Restoration Council to determine whether certain surplused lands are suitable for bona fide agricultural purposes; prohibits local governmental entity from transferring future development rights for surplused lands determined to be suitable for bona fide agricultural purposes; requires DEP, in coordination with DACS, to determine whether state-owned conservation lands are suitable for bona fide agricultural purposes; authorizes DEP to surplus specified state-owned lands determined to be suitable for bona fide agricultural purposes; prohibits person from wearing or displaying item that displays words "concealed weapon permit" or "concealed weapon permit holder" with intent to mislead another to believe that person is authorized to wear or display such item; prohibits possession, manufacture, sale, importation, distribution, or use of signal jamming device. Effective Date: July 1, 2026

Current Committee of Reference: House Commerce Committee

SB 0434 **Assessment of Property Used for Residential Purposes** by Leek

Assessment of Property Used for Residential Purposes; Defining the term "changes or improvements made to improve the property's resistance to wind damage"; prohibiting the consideration of the

increase in just value of a property which is attributable to changes or improvements made to improve the property's resistance to wind damage in determinations of the assessed value of certain property, etc. Effective Date: July 1, 2026

Current Committee of Reference: Senate Finance and Tax

SB 0450 **Ad Valorem Tax Exemption for Disabled Veterans** by Polsky

Ad Valorem Tax Exemption for Disabled Veterans; Removing a limitation on the value of a tax exemption that a surviving spouse could transfer to a new residence; revising when a specified tax exemption is considered to be granted, etc. Effective Date: July 1, 2026

Current Committee of Reference: Senate Finance and Tax

HB 0455 **Protection of Historic Monuments and Memorials** by Black

Protection of Historic Monuments and Memorials: Preempts all removal, damage to, or destruction of historic Florida monuments & memorials; provides that any existing or future ordinance, regulation, or rule to contrary, & certain actions by elected or appointed local government officials, are void; prohibits local governments from enacting or enforcing specified ordinances, regulations, or rules; provides penalties; requires DOS to withhold certain funding from local government; authorizes local government to temporarily remove & relocate monument or memorial in certain instances; authorizes Division of Historical Resources of DOS to request certain recommendations from Florida Historical Commission & Department of Veterans' Affairs. Effective Date: upon becoming a law

Current Committee of Reference: House Government Operations Subcommittee

---

HB 0479 **Land and Water Management** by Maggard

Land and Water Management: Prohibits counties & municipalities from adopting laws, regulations, rules, policies, or ordinances that prohibit adjacent upland activities that are outside certain wetland buffers;
repeals provisions relating to land management review teams. Effective Date: July 1, 2026

Current Committee of Reference: House Intergovernmental Affairs Subcommittee

---

SB 0488 **Department of Highway Safety and Motor Vehicles** by Massullo, Jr.

Department of Highway Safety and Motor Vehicles; Requiring licensure in lieu of registration of motor carriers operating certain qualified motor vehicles; revising due dates for motor fuel use tax returns submitted by licensed motor carriers; authorizing the department to inspect records necessary to verify the tax returns of motor carriers, motor fuel retail dealers, and motor fuel wholesale distributors; revising the apparent amount of property damage which requires the driver of a vehicle involved in a crash to notify law enforcement of the crash, etc. Effective Date: 7/1/2026

Current Committee of Reference: Senate Fiscal Policy

SB 0496 **Protection of Historic Monuments and Memorials** by McClain

Protection of Historic Monuments and Memorials; Citing this act as the "Historic Florida Monuments and Memorials Protection Act"; preempting all removal, damage to, or destruction of historic Florida monuments and memorials; providing that any existing or future ordinance, regulation, or rule to the contrary, and certain actions by elected or appointed local government officials, are void; providing civil penalties for certain officials who engage in certain actions; authorizing a local government to temporarily remove and relocate a monument or memorial in certain instances provided certain requirements are met, etc. Effective Date: Upon becoming a law

Current Committee of Reference: Senate Governmental Oversight and Accountability

---

SB 0504 **Code Inspector Body Cameras** by Burgess

Code Inspector Body Cameras; Requiring a governmental entity that permits its code inspectors to wear body cameras to establish certain policies and procedures; requiring such governmental entity to ensure that certain training occurs, to retain certain data in accordance with public records laws, and to perform a periodic review of actual body camera practices; providing that certain provisions relating to the interception of wire, electronic, and oral communications do not apply to body camera recordings made by code inspectors, etc. Effective Date: July 1, 2026

Current Committee of Reference: Senate Rules

SB 0506 **Public Records/Body Camera Recordings Recorded by a Code Inspector** by Burgess

Public Records/Body Camera Recordings Recorded by a Code Inspector; Providing an exemption from public records requirements for body camera recordings recorded by a code inspector under certain circumstances; providing exceptions; requiring a local government to retain body camera recordings for a specified timeframe; providing for future legislative review and repeal of the exemption; providing a statement of public necessity, etc. Effective Date: On the same date that SB 504 or similar legislation takes effect, if such legislation is adopted in the same legislative session or an extension thereof and becomes a law

Current Committee of Reference: Senate Rules

SB 0508 **Landscape Irrigation** by Truenow

Landscape Irrigation; Creating the “Landscape Irrigation Standards and Watering Restrictions Act”; prohibiting a person from taking certain actions regarding a landscape irrigation system unless such person is a licensed irrigation contractor or the property owner; specifying that only a licensed irrigation contractor may connect an irrigation system to a water supply; providing a purpose for landscape irrigation system standards; creating a landscape irrigation watering schedule; providing for the enforcement of the act, etc. Effective Date: July 1, 2026

Current Committee of Reference: Senate Regulated Industries

HB 0509 **Code Inspector Body Cameras** by Partington

Code Inspector Body Cameras: Requires governmental entity that permits its code inspectors to wear body cameras to establish certain policies & procedures; requires such governmental entity to ensure that certain training occurs, to retain certain data in accordance with public records laws, & to perform periodic review of actual body camera practices; provides that certain provisions relating to interception of wire, electronic, & oral communications do not apply to body camera recordings made by code inspectors. Effective Date: July 1, 2026

Current Committee of Reference: House State Affairs Committee

HB 0511 **Pub. Rec./Code Inspector Body Cameras** by Partington

Pub. Rec./Code Inspector Body Cameras: Provides exemption from public records requirements for body camera recordings recorded by code inspector; requires local government to retain body camera recordings for specified timeframe; provides for future legislative review & repeal of exemption; provides statement of public necessity; directs Division of Library & Information Services of DOS to adopt specified retention requirement for certain body camera recordings by specified date. Effective Date: on the same date that HB 509 or similar legislation takes effect

Current Committee of Reference: House Government Operations Subcommittee

HB 0521 **Fines for Violations Detected by Traffic Infraction Detectors** by Yeager

Fines for Violations Detected by Traffic Infraction Detectors: Authorizes county or municipality to issue fine for certain violations detected through use of traffic infraction detector; requires fine to be accompanied by certain photograph or image. Effective Date: July 1, 2026

Current Committee of Reference: House Government Operations Subcommittee

---

HB 0535 **Candidate Qualifying** by Benarroch

Candidate Qualifying: Requires certain candidates to provide filing officer statement disclosing dual citizenship for nomination & election to federal, state, county, multicounty, district, or judicial office or to district school board. Effective Date: July 1, 2026

Current Committee of Reference: House State Affairs Committee

---

HB 0543 **Transportation** by McFarland

Transportation: Requires DOT to increase minimum perception-reaction time for all steady yellow signals at certain intersections by specified amount of time; requires certain seaports to submit annual report describing measures taken to support commercial space launch industry to Space Florida; prohibits certain seaports from converting planned or existing land, facilities, or infrastructure that supports cargo purposes unless specified conditions are met; requires legislative approval for use of state funds for specified projects; authorizes private entity to install automated license plate recognition system for use on certain property; authorizes county or municipality to set lower maximum speed limit under certain conditions; authorizes vehicles displaying disabled parking permits to occupy more than one parking space under specified conditions; requires certain motor vehicles to be equipped with & maintain exhaust system to prevent excessive or unusual noise; authorizes certain golf carts to be titled & registered for operation on certain roads without inspection by DOT; provides that use of license plate frame or decorative border device is not prohibited under specified conditions; providing requirements for electronic credentialing system; authorizes DOT to make direct payments to certain subcontractors under specified conditions; provides requirements for takeover agreement; requires DOT to implement Next-generation Traffic Signal Modernization Grant Program. Effective Date: July 1, 2026

Current Committee of Reference: House Commerce Committee

SB 0548 **Growth Management** by McClain

Growth Management; Providing requirements for coordination mechanisms that are required for certain agreements required as part of the intergovernmental coordination element of a comprehensive plan; requiring that certain interlocal agreements use a plan-based methodology for a certain purpose; requiring that certain capacity standards be specified in a certain impact fee study; requiring that a demonstrated-need study be accompanied by a certain declaration; prohibiting local governments, school districts, and special districts from using certain data for a specified purpose, etc. Effective Date: 7/1/2026

Current Committee of Reference: Senate Finance and Tax

SB 0550 **Prohibition on Levying Ad Valorem Taxes on Tangible Personal Property** by Bernard

Prohibition on Levying Ad Valorem Taxes on Tangible Personal Property; Proposing amendments to the State Constitution to prohibit levying ad valorem taxes on tangible personal property by counties, school districts, and municipalities and to provide an effective date, etc.

Current Committee of Reference: Senate Finance and Tax

SB 0552 **Prohibition on Levying Ad Valorem Taxes on Tangible Personal Property** by Bernard

Prohibition on Levying Ad Valorem Taxes on Tangible Personal Property; Conforming provisions to proposed amendments made to the State Constitution which prohibit levying ad valorem taxes on tangible personal property by counties, school districts, and municipalities; repealing a provision relating

to the property appraiser's assessments and effect of determinations by value adjustment boards; repealing a provision relating to extending the date for filing tangible personal property tax returns; repealing a provision relating to tax returns to show all exemptions and claims, etc. Effective Date: On the effective date of the amendment to the State Constitution proposed by SJR 550 or a similar joint resolution having substantially the same specified intent and purpose, if such amendment to the State Constitution is approved at the next general election or at an earlier special election specifically authorized by law for that purpose

Current Committee of Reference: Senate Finance and Tax

HB 0555 **Local Licensing of Home Caregivers** by Skidmore

Local Licensing of Home Caregivers: Authorizes counties & municipalities to license home caregivers within their jurisdictions. Effective Date: July 1, 2026

Current Committee of Reference: House Health Care Facilities & Systems Subcommittee

---

SB 0558 **Standards for Storm Water Systems** by Burgess

Standards for Storm Water Systems; Requiring storm water systems in counties and municipalities, respectively, to comply with specified Department of Transportation standards; providing inspection requirements for such systems; specifying that certain local standards are superseded, etc. Effective Date: July 1, 2026

Current Committee of Reference: Senate Environment and Natural Resources

---

HB 0575 **Auxiliary Containers** by Weinberger

Auxiliary Containers: Defines "auxiliary container" and "single-use"; removes obsolete provisions; preempting regulation of auxiliary containers to state; provides exceptions; requires DEP to develop uniform ordinance for use and disposition of single-use, nonrecyclable auxiliary containers; provides requirements for development of such ordinance; requires that sale or distribution of single-use plastic auxiliary containers on lands managed by Division of Recreation & Parks of DEP be eliminated to greatest extent possible; prohibits use, sale, or distribution of certain single-use auxiliary containers on such lands; requires department to develop and make available on its website statewide Marine Debris Reduction Plan; provides requirements for such plan; removes s. 500.90, F.S., relating to regulation of polystyrene products preempted to DACS. Effective Date: July 1, 2026

Current Committee of Reference: House Natural Resources & Disasters Subcommittee

---

SB 0576 **Local Government Cyber Security** by Harrell

Local Government Cyber Security; Creating the Local Government Cybersecurity Protection Program; requiring local governments to participate in the program and to apply to the Florida Digital Service to use cybersecurity programs and software; establishing priority for certain counties under the program; requiring the Florida Digital Service through the department to secure and administer federal funds, etc. Effective Date: July 1, 2026

Current Committee of Reference: Senate Governmental Oversight and Accountability

---

SB 0580 **Local Licensing of Home Caregivers** by Harrell

Local Licensing of Home Caregivers; Authorizing counties and municipalities to license home caregivers within their jurisdictions, etc. Effective Date: 7/1/2026

Current Committee of Reference: Senate Health Policy

SB 0588 **Local Government Enforcement Actions** by McClain

Local Government Enforcement Actions; Prohibiting certain enforcement actions by counties, municipalities, and special districts, respectively; defining the term “enforcement action”; requiring counties, municipalities, and special districts, respectively, to establish and maintain rules; authorizing filing of legal action and providing legal remedies in certain circumstances, etc. Effective Date: October 1, 2026

Current Committee of Reference: Senate Community Affairs

HB 0589 **Onsite Sewage Treatment and Disposal System Permits** by Nix, Jr.

Onsite Sewage Treatment and Disposal System Permits: Prohibits municipality or political subdivision of state from requiring owners & builders of certain residences to receive construction permits from DEP as condition of issuing building or plumbing permits; requires such owners & builders to provide certain proof to municipality or political subdivision. Effective Date: upon becoming a law

Current Committee of Reference: House Intergovernmental Affairs Subcommittee

---

SB 0594 **Local Housing Assistance Plans** by Burton

Local Housing Assistance Plans; Authorizing counties and eligible municipalities to expend certain funds on lot rental assistance for mobile home owners for a specified time period; requiring each county and eligible municipality to include in its local housing assistance plan certain strategies; authorizing counties and eligible municipalities to provide certain funds to mobile home owners for rehabilitation and emergency repairs, etc. Effective Date: July 1, 2026

Current Committee of Reference: Senate Rules

SB 0602 **Watercraft Restrictions Based on Energy Source** by Bernard

Watercraft Restrictions Based on Energy Source; Providing an exception to the prohibition on state agencies, governmental authorities, and local governments restricting the use or sale of watercraft based on the energy source used to power the watercraft if such watercraft is used on certain bodies of water, etc. Effective Date: July 1, 2026

Current Committee of Reference: Senate Environment and Natural Resources

---

SB 0610 **Residential Swimming Pool Requirements** by Smith

Residential Swimming Pool Requirements; Requiring that swimming pools located on residential real property that is transferred or sold on or after a specified date meet certain pool safety requirements; requiring that swimming pools located on residential real property that is transferred or sold on or after a specified date meet certain pool barrier requirements, etc. Effective Date: 7/1/2026

Current Committee of Reference: Senate Regulated Industries

HB 0611 **Landscape Irrigation** by Cobb

Landscape Irrigation: Prohibits certain actions regarding landscape irrigation systems unless such actions are taken by licensed irrigation contractors or property owners; authorizes local governments or water management districts to adopt certain requirements for property owners who install such systems; provides requirements for permits, plans, equipment & capacity, maintenance, & water schedules relating to such systems; provides fines & penalties; prohibits local governments from adopting or enforcing certain laws, rules, or regulations; authorizes DEP to adopt rules; revises membership of Construction Industry Licensing Board. Effective Date: July 1, 2026

Current Committee of Reference: House Natural Resources & Disasters Subcommittee

---

SB 0620 **Candidate Qualifying** by Mayfield

Candidate Qualifying; Requiring certain candidates to provide the filing officer a statement disclosing dual citizenship for nomination and election to federal, state, county, multicounty, district, or judicial office or to a district school board, etc. Effective Date: 7/1/2026

Current Committee of Reference: Senate Judiciary

HB 0629 **Regulation of Auxiliary Containers** by Esposito

Regulation of Auxiliary Containers: Preempts regulation of auxiliary containers to state; authorizes rules, regulations, & ordinances restricting use of glass auxiliary containers within boundaries of public beach or state park; authorizes Division of Recreation & Parks to regulate auxiliary containers within state parks. Effective Date: July 1, 2026

Current Committee of Reference: House Natural Resources & Disasters Subcommittee

HB 0635 **Cybersecurity Standards and Liability** by Giallombardo

Cybersecurity Standards and Liability: Prohibits local governments from imposing certain cybersecurity standards or processes on vendors; defines "vendor"; prohibits local governments from adopting or enforcing certain cybersecurity standards or processes; provides that local government, covered entity, or third-party agent that complies with certain requirements is not liable in connection with cybersecurity incident; requires covered entities & third-party agents to implement revised frameworks, standards, laws, or regulations. Effective Date: upon becoming a law

Current Committee of Reference: House Civil Justice & Claims Subcommittee

SB 0650 **Local Business Taxes** by Bernard

Local Business Taxes; Repealing provisions relating to local business taxes; authorizing certain counties to continue to impose a business tax; authorizing such counties to revise the definition of the term “merchant” in a specified manner; prohibiting such counties from revising a specified tax rate, etc. Effective Date: July 1, 2026

Current Committee of Reference: Senate Community Affairs

SB 0654 **Traffic Infraction Enforcement** by DiCeglie

Traffic Infraction Enforcement; Revising the periods during which a county or municipality may enforce school zone speed limits, and the violations for which such enforcement is authorized, through the use of a speed detection system; prohibiting the use of a traffic infraction detector for remote surveillance; requiring district school board authorization and a public hearing process before a school district may place or install, or contract with a vendor to install, operate, and maintain, school bus infraction detection systems; revising the periods for which a county or municipality may authorize a traffic infraction enforcement officer to issue certain uniform traffic citations, etc. Effective Date: 10/1/2026

Current Committee of Reference: Senate Appropriations Committee on Transportation, Tourism, and Economic Development

HB 0675 **Affordable Housing** by Driskell

Affordable Housing: Revises upwards length of time that certain rental units must remain affordable in order to qualify for specified zoning variance; requires certain incentives be used for construction of affordable housing; revises upwards length of time that certain rental units must remain affordable in order to qualify for specified zoning variance; revises downward maximum median income used to determine eligibility for certain tax incentives; specifies that certain taxes do not apply to first-time homebuyers. Effective Date: July 1, 2026

Current Committee of Reference: House Housing, Agriculture & Tourism Subcommittee

SB 0692 **Cybersecurity Standards And Liability** by Leek

Cybersecurity Standards and Liability; Authorizing local governments to only adopt specified cybersecurity standards; prohibiting the Department of Management Services from delegating the authority to set such standards to local governments; providing that a local government, a covered entity, or a third-party agent that complies with certain requirements is not liable in connection with a cybersecurity incident under certain circumstances, etc. Effective Date: Upon becoming a law

Current Committee of Reference: Senate Governmental Oversight and Accountability

SB 0698 **Onsite Sewage Treatment and Disposal System Permits** by Martin

Onsite Sewage Treatment and Disposal System Permits; Prohibiting a municipality or political subdivision of the state from requiring owners and builders of certain residences to receive construction permits from the Department of Environmental Protection as a condition of issuing building or plumbing permits; requiring such owners and builders to provide certain proof to the municipality or political subdivision, etc. Effective Date: Except as otherwise expressly provided in this act, this act shall take effect upon becoming a law

Current Committee of Reference: Senate Community Affairs

SB 0718 **Water Management** by McClain

Water Management; Prohibiting counties and municipalities from adopting laws, regulations, rules, or policies relating to water quality or quantity, pollution control, pollutant discharge prevention or removal, or wetlands; preempting such regulation to the state; repealing a provision relating to land management review teams, etc. Effective Date: 7/1/2026

Current Committee of Reference: Senate Environment and Natural Resources

SB 0750 **Alternative Plans Review and Building Inspection** by DiCeglie

Alternative Plans Review and Building Inspection; Deleting a provision authorizing a local government to charge an administrative fee when an owner or contractor retains a private provider for purposes of plans review or building inspection services, etc. Effective Date: 7/1/2026

Current Committee of Reference: Senate Community Affairs

SB 0752 **Taxation of First-time Buyers** by DiCeglie

Taxation of First-time Buyers; Specifying that documentary stamp taxes do not apply to deeds, transfers, or conveyances of residential property to first-time homebuyers; defining the term “first-time homebuyer”; specifying that documentary stamp taxes do not apply to certain documents executed by a first-time homebuyer in connection with the purchase of a principal residence, etc. Effective Date: 7/1/2026

Current Committee of Reference: Senate Finance and Tax

SB 0756 **Affordable Housing** by Davis

Affordable Housing; Increasing the length of time that certain rental units must remain affordable in order to qualify for a specified zoning variance; requiring that certain incentives be used for the construction of affordable housing; decreasing the maximum median income used to determine eligibility for certain tax incentives; specifying that documentary stamp taxes do not apply to deeds, transfers, or conveyances of residential property to first-time homebuyers, etc. Effective Date: 7/1/2026

Current Committee of Reference: Senate Community Affairs

SB 0766 **Waste Management** by Martin

Waste Management; Deleting obsolete provisions that provide legislative findings and require the Department of Environmental Protection to review and update a specified report; preempting the regulation of auxiliary containers to the state; permitting rules, regulations, or ordinances restricting the use of glass auxiliary containers within the boundaries of a public beach; authorizing the Division of Recreation and Parks to regulate auxiliary containers within state parks; specifying that certain local ordinances and restrictions are permitted, etc. Effective Date: July 1, 2026

Current Committee of Reference: Senate Environment and Natural Resources

---

HB 0773 **Municipal Utilities** by Brackett

Municipal Utilities: Authorizes municipality to transfer portion of its public utility earnings to its general fund; requires that such percentages be established or reestablished by local referendum, subject to majority vote; provides exception to percentage restrictions in event of disaster or emergency; authorizes such percentages to be established by passage of resolution, by four-fifths vote; requires such percentages to be repaid to general fund within specified time period; prohibits municipality from transferring portion of its public utility earnings in certain instances; prohibits ability of municipality to receive certain state funds if such prohibited transfer is effected; requires specified disclosure in budget & financial report of municipality. Effective Date: July 1, 2026

Current Committee of Reference: House Economic Infrastructure Subcommittee

---

HB 0803 **Building Permits and Inspections** by Trabulsy

Building Permits and Inspection: Provides for expiration of certain building permits issued by county & local government; provides that under certain circumstances certain persons are not subject to discipline for performing job without applicable permits & inspections; prohibits local governments from requiring building permit for installation of certain walls or barriers; revises provisions relating to building code inspection services provided by private provider & private provider firms, including permit & administrative fees, responsibilities of private providers, permitting & inspection documents & reports, timeframes for issuing permits & notices, authority of local building official, notices of incomplete forms, authority of private providers acting as local building official, emergency inspection services, creation of uniform forms, audits, immunity, civil causes of action, posting of permits on specified websites, & adoption of specified registration system; requires Florida Building Commission to develop uniform commercial & residential building permit applications; prohibits association or certain committees from requiring building permit as prerequisite for certain review. Effective Date: July 1, 2026

Current Committee of Reference: House Intergovernmental Affairs Subcommittee

---

SB 0840 **Land Use Regulations for Local Governments Affected by Natural Disasters** by DiCeglie

Land Use Regulations for Local Governments Affected by Natural Disasters; Prohibiting impacted local governments from enforcing certain moratoriums, requiring the repair or reconstruction of certain improvements to meet certain requirements, or enforcing changes to specified procedures; revising circumstances under which impacted local governments may enforce certain amendments, site plans, development permits, or development orders; deleting provisions related to filing suit against an impacted local government for injunctive relief, etc. Effective Date: 7/1/2026

Current Committee of Reference: Senate Rules

SB 0852 **Food Insecure Areas** by Jones

Food Insecure Areas; Authorizing a local government to enact land development regulations to permit land use for a small-footprint grocery store located in a food insecure area; authorizing a local government to include in its comprehensive plan a provision permitting land use for a small-footprint grocery store located in a food insecure area, etc. Effective Date: July 1, 2026

Current Committee of Reference: Senate Community Affairs

HB 0853 **Mobile Home Park Regulations** by Long

Mobile Home Park Regulations: Authorizes counties & municipalities to adopt & enforce local laws, codes, or ordinances relating to mobile home park lot tenancies; authorizes code enforcement officer to cite certain violations to mobile home park owner or mobile home owner; revises obligations & responsibilities of mobile home park owner; revises obligations & responsibilities of mobile home owner; removes provision that mobile home owner is responsible for certain fines; authorizes unit of local government to adopt & enforce local laws, ordinances, or codes for specified purpose; authorizes unit of local government to adopt & enforce local laws, ordinances, or codes for specified purpose; authorizes unit of local government to bring civil proceeding against mobile home park owner or mobile home lot. Effective Date: July 1, 2026

Current Committee of Reference: House Housing, Agriculture & Tourism Subcommittee

HB 0865 **Local Regulation of Drinking Straws and Stirrers** by Blanco

Local Regulation of Drinking Straws and Stirrers: Prohibits local governmental entities from enacting any rule, regulation, or ordinance for drinking straws or stirrers which does not meet specified requirements; provides requirements for local governmental entities that elect to enact rules, regulations, or ordinances for drinking straws or stirrers. Effective Date: upon becoming a law

Current Committee of Reference: House Natural Resources & Disasters Subcommittee

HB 0903 **Assessed Value of Nonhomestead Property** by Grow

Assessed Value of Nonhomestead Property: Proposes State Constitutional amendment reducing maximum percentage assessed value of nonhomestead properties may increase annually.

Current Committee of Reference: House Ways & Means Committee

SB 0910 **Parking on Public Property** by Mayfield

Parking on Public Property; Defining the terms “public property” and “publicly owned buildings or facilities”; requiring local governments to refund owners of vehicles who pay fees to park on specified public property in certain circumstances; prohibiting certain vehicles from being towed or issued a traffic citation for a specified time period after being parked on specified public property; prohibiting local governments from allowing private business entities or enterprises to use specified public property for private parking purposes for a fee; providing construction, etc. Effective Date: July 1, 2026

Current Committee of Reference: Senate Transportation

HB 0927 **Local Land Planning and Development** by Sapp

Local Land Planning and Development: Requires land development regulation commission to develop model ordinance to guide local governments in enactment of land planning & development program ordinance; requires local governments by date certain to enact land planning & development program ordinance under which local governments may enter into employment agreements with certain private providers to perform specified review services; establishes contract terms & conditions of employment agreements for review services under program ordinance; authorizes civil causes of action for specified relief; requires governing body of county or legal governing body of county, municipality, town, or village to create program, or to update existing program, to expedite process for issuing building permits for residential subdivisions, planned unit developments, or planned communities, or one or more phases of multi-phased community or subdivision, by date certain; authorizes applicant to use specified private provider for land use approvals to expedite application process for any plans necessary to support approval of site plan, preliminary plat, & final plat, or building permits after preliminary plat is approved. Effective Date: July 1, 2026

Current Committee of Reference: House Intergovernmental Affairs Subcommittee

SB 0940 **Municipal Water and Sewer Utility Rates, Fees, and Charges** by McClain

Municipal Water and Sewer Utility Rates, Fees, and Charges; Deleting a limitation on the amount of rates, fees, and charges municipal water and sewer utilities are authorized to impose on consumers for such services outside the boundaries of the municipality; providing for the continuance and phase out of certain bond covenant surcharges; requiring municipalities operating such utilities to submit a specified rate study every 7 years to the Department of Environmental Protection which evaluates certain information, etc. Effective Date: 7/1/2026

Current Committee of Reference: Senate Regulated Industries

SB 0948 **Local Government Land Development Regulations and Orders** by McClain

Local Government Land Development Regulations and Orders; Revising, for counties and municipalities, respectively, the application procedures for development permits and orders; creating the “Florida Starter Homes Act”; prohibiting local governments from adopting land development regulations governing lots on residential real property unless such adoption meets specified requirements; prohibiting local governments from adopting certain land development regulations if a lot on residential real property is connected to a public water system or a public sewer system, etc. Effective Date: 7/1 /2026

Current Committee of Reference: Senate Community Affairs

HB 0957 **Deferred and Unpaid Taxes** by Long

Deferred and Unpaid Taxes: Limits specified tax deferral to properties with just value of $1 million or less; increases minimum value of tax certificate that may be sold at public auction or by electronic sale. Effective Date: July 1, 2026

Current Committee of Reference: House Ways & Means Committee

SB 0958 **Local Regulation of Drinking Straws and Stirrers** by Bradley

Local Regulation of Drinking Straws and Stirrers; Prohibiting local governmental entities from enacting any rule, regulation, or ordinance for drinking straws or stirrers which does not meet specified requirements; providing requirements for local governmental entities that elect to enact rules, regulations, or ordinances for drinking straws or stirrers, etc. Effective Date: Upon becoming a law
Current Committee of Reference: Senate Community Affairs

HB 0967 **Electronic Payments Made to Units of Local Governments** by Buchanan

Electronic Payments Made to Units of Local Governments: Revises legislative intent; requires units of local government to accept certain forms of payments; requires such local governments accept payments online. Effective Date: July 1, 2026

Current Committee of Reference: House State Affairs Committee

SB 0968 **Home Backup Power Systems** by McClain

Home Backup Power Systems; Prohibiting a local government from adopting a technical amendment to the Florida Building Code which requires a permit or any functionally equivalent local review or approval for certain backup power systems; prohibiting a local government that issues building permits from requiring an owner of a single-family dwelling or such owner’s contractor to obtain a building permit to perform work on the single-family lot valued at less than a specified sum; prohibiting a local enforcement agency from requiring a permit or any functionally equivalent local review or approval for

the installation, relocation, replacement, or repair of an eligible residential backup power system; defining the term “backup power system”, etc. Effective Date: July 1, 2026

Current Committee of Reference: Senate Community Affairs

HB 0979 **Infill Redevelopment** by Borrero

Infill Redevelopment: Requires local government to permit development of certain qualifying parcels up to certain density & intensity; requires local government to permit development of qualifying parcel with single-family homes or townhouses; prohibits local government from imposing certain restrictions or requirements on development of certain qualifying parcels; prohibits local government from using subdivision process to restrict development; requires developers of qualifying parcels to establish that certain recreational facilities & areas reserved for recreational use have not been in operation or use for certain timeframe, to pay double parks & recreational facilities impact fees for certain purpose, & to provide certain written notice to certain property owners; requires property owners who receive such written notice to exercise option to purchase certain parcels or portions thereof within specified timeframe or forfeit option. Effective Date: upon becoming a law

Current Committee of Reference: House Intergovernmental Affairs Subcommittee

---

SB 0998 **Department of Commerce** by Yarborough

Department of Commerce; Repealing provisions relating to the Florida Small Cities Community Development Block Grant Program Act; providing an exemption for certain conveyances of state lands to certain federal agencies which revert to the Board of Trustees of the Internal Improvement Trust Fund if such land is not used for its intended purposes as a military installation buffer or if the military installation closes; requiring employers who are required to use the E-Verify system to verify a new employee’s employment eligibility to maintain an E-Verify case result for each employee which shows that the employee is authorized to work; requiring the department to provide an employer knowingly employing an unauthorized alien with a written determination, etc. Effective Date: July 1, 2026

Current Committee of Reference: Senate Appropriations Committee on Transportation, Tourism, and Economic Development

---

HB 1001 **Official Actions of Local Governments** by Black

Official Actions of Local Governments: Prohibits counties & municipalities, respectively, from funding or promoting or taking official action as it relates to diversity, equity, & inclusion; prohibits counties & municipalities from expending funds for diversity, equity, & inclusion offices or for diversity, equity, & inclusion officers; provides that county commissioner, member of governing body of municipality, or any other county or municipal official acting in official capacity who violates certain provisions commits misfeasance or malfeasance in office; authorizes cause of action against counties & municipalities; authorizes court to enter judgment awarding certain relief, damages, & costs; requires potential recipients of county or municipal contracts or grants to make certain certification to county or municipality before being awarded such contract or grant. Effective Date: January 1, 2027

Current Committee of Reference: House Intergovernmental Affairs Subcommittee

---

HB 1007 **Hyperscale Data Centers** by Griffitts Jr.

Hyperscale Data Centers: Provides that hyperscale data centers are prohibited use on or after date certain for specified land use categories in local in comprehensive plans & agricultural zoning districts within unincorporated areas; prohibits utilities, in fixing rates for hyperscale data centers, from collecting certain impact fees; requires permit applications for consumptive use of water relating to hyperscale data centers to contain specified disclosure; prohibits construction & operation of hyperscale data centers on specified lands & water on or after date certain; provides for hearing requirement before construction & operation of hyperscale data centers; requires governing body of local government that approves construction & operation of hyperscale data center to request, in concurrence with specified board, approval; provides for concurrence hearing requirements; prohibits construction of hyperscale data center if board does not approve concurrence request at such hearing. Effective Date: July 1, 2026

Current Committee of Reference: House State Affairs Committee

SB 1014 **Provision of Municipal Utility Service to Owners Outside the Municipal Limits** by Mayfield

Provision of Municipal Utility Service to Owners Outside the Municipal Limits; Prohibiting a municipal utility from declining to extend service to properties outside its corporate limits under certain circumstances; requiring a municipal utility to expand its service to an owner who makes such a request under certain circumstances; requiring the municipal utility to make a determination within a specified timeframe and provide such determination to the owner in writing; requiring the municipal utility to provide the owner with specified information and to connect properties in a timely manner, etc. Effective Date: 7/1/2026

Current Committee of Reference: Senate Regulated Industries

SB 1018 **Deferred Compensation Plans for Public Employees** by Truenow

Deferred Compensation Plans for Public Employees; Citing this act as the "Deferred Compensation Automatic Enrollment Act'; authorizing the inclusion of an automatic enrollment arrangement in a government employee's deferred compensation plan; requiring that the automatic enrollment arrangement provide employees the ability to make certain elections regarding contributions; requiring that the plan provide for a default investment into which contributions must be placed under a specified circumstance; authorizing counties, municipalities, political subdivisions, and constitutional county officers to adopt automatic enrollment arrangements for specified deferred compensation programs, etc.
Effective Date: 7/1/2026

Current Committee of Reference: Senate Governmental Oversight and Accountability

HB 1049 **Building Permit Requirements** by Esposito

Building Permit Requirements: Prohibits local government from adopting certain technical amendments to Florida Building Code; prohibits local government from requiring building permit for work valued at specified amount that is performed on single-family dwelling; authorizes local government to require building permit for certain work regardless of value of work; requires contractor to maintain certain written records; prohibits local enforcement agency from requiring building permit for specified work on backup power system that is installed by certain persons or entities; provides exception; prohibits local governments from adopting or enforcing certain ordinances, rules, or other measures; authorizes local enforcement agency to conduct certain inspections, either in person or virtually; authorizes owner or owner's contractor to use private provider for certain inspections; provides requirements for private provider; requires local enforcement agency to provide certain persons written notice of correction; authorizes stop-work order only under specific circumstances; requires local enforcement agency to offer owner or owner's contractor reinspection date within certain time period; provides that private provider inspection report constitutes acceptance; prohibits local enforcement agency from withholding or revoking certificate of occupancy based solely on failed inspection report. Effective Date: July 1, 2026

Current Committee of Reference: House Industries & Professional Activities Subcommittee

HB 1085 **Local Government Cyber Security** by Miller

Local Government Cyber Security: Creates Florida State University Cybersecurity Protection Program; provides purpose of program; requires local governments to participate in program & to submit requests to Florida State University to use cybersecurity programs & software developed by university; establishes priority for certain counties under program; authorizes Florida State University to apply for & accept certain funds or grants. Effective Date: July 1, 2026

Current Committee of Reference: House Information Technology Budget & Policy Subcommittee

HB 1089 **Waste Facilities** by Bartleman

Waste Facilities: Prohibits local government from issuing construction permit for certain solid waste disposal & waste-to-energy facilities under certain circumstances. Effective Date: July 1, 2026

Current Committee of Reference: House Natural Resources & Disasters Subcommittee

---

HB 1125 **Local Government Salaries and Benefits** by Giallombardo

Local Government Salaries and Benefits: Revises requirements for board of county commissioners salary formula to apply to noncharter counties; provides for determination of salaries of members of boards of county commissioners of certain counties; requires referendum for board of county commissioners to increase salary, retirement benefits, or other compensation paid to its members; requires referendum election costs to be paid by county; requires referendum for governing body of municipality to increase salary, retirement benefits, or other compensation paid to its members; requires referendum election costs to be paid by municipality; requires referendum for governing body of special district to increase salary, retirement benefits, or other compensation paid to its members; requires referendum election costs to be paid by special district. Effective Date: October 1, 2026

Current Committee of Reference: House Intergovernmental Affairs Subcommittee

---

SB 1134 **Official Actions of Local Governments** by Yarborough

Official Actions of Local Governments; Prohibiting counties and municipalities, respectively, from funding or promoting or taking official action as it relates to diversity, equity, and inclusion; providing that certain ordinances, resolutions, rules, regulations, programs, and policies are void; providing that a county commissioner, a member of the governing body of a municipality, or any other county or municipal official acting in an official capacity who violates certain provisions commits misfeasance or malfeasance in office, etc. Effective Date: January 1, 2027

Current Committee of Reference: Senate Community Affairs

SB 1138 **Qualified Contractors** by Massullo, Jr.

Qualified Contractors; Requiring the governing body of a local government, by a specified date, to create a program that authorizes an applicant to use a qualified contractor to conduct preapplication review of an application; requiring the development services office of a local government to establish a registry of a specified number of qualified contractors to be used to conduct preapplication reviews; prohibiting a local government from enforcing any additional criteria for qualified contractors beyond what is authorized by the act; prohibiting local governments from creating or establishing additional regulations for the approval of a final plat, etc. Effective Date: 7/1/2026

Current Committee of Reference: Senate Judiciary

HB 1139 **Impact Fees** by Gentry

Impact Fees: Defines "plan-based methodology"; revises provisions relating to intergovernmental coordination elements in comprehensive plans; requires interlocal agreements that coordinate mitigation of their respective transportation capacity impacts to use certain methodology; revises criteria local government, school district, or special district must meet to increase impact fee rates; defines "extraordinary circumstances." Effective Date: July 1, 2026

Current Committee of Reference: House Intergovernmental Affairs Subcommittee

---

HB 1143 **Local Government Land Development Regulations and Orders** by Nix, Jr.

Local Government Land Development Regulations and Orders: Revises, for counties & municipalities, respectively, application procedures for development permits & orders; prohibits local governments from adopting land development regulations governing lots on residential real property unless such adoption

meets specified requirements; prohibits local governments from adopting certain land development regulations if lot on residential real property is connected to public water system or public sewer system; requires that land development regulations adopted by local government allow lots to front or abut shared space instead of public right-of-way; establishes cause of action; authorizes award of specified remedies; provides for waiver of sovereign immunity. Effective Date: July 1, 2026

Current Committee of Reference: House Intergovernmental Affairs Subcommittee

---

HB 1151 **Health Care Autonomy** by Driskell

Health Care Autonomy: Establishes fundamental right to reproductive health care; provides that every individual has fundamental right to make autonomous decisions about individual's own reproductive health; provides that individuals who become pregnant have fundamental right to make certain decisions in exercise of such right; prohibits state from denying or interfering with individual's right to access reproductive health care; prohibits state & local law enforcement agencies & officials from harassing or discriminating against individual for providing or obtaining reproductive health care or assisting another person in doing so; prohibits such state & local entities from penalizing, prosecuting, or otherwise taking adverse action against individual for exercising specified rights, or against individual for assisting another in exercising such rights; provides individuals with immunity from civil liability for exercising specified rights or aiding or assisting another in exercising such rights; provides that fertilized egg, embryo, or fetus does not have independent rights under laws of this state; prohibits local units of government from regulating individual's ability to exercise right to reproductive health care in manner more restrictive than that set forth in specified provisions. Effective Date: effect upon becoming a law

Current Committee of Reference: House Health Professions & Programs Subcommittee

---

HB 1169 **Enforcement of the Florida Building Code** by Tramont

Enforcement of the Florida Building Code: Provides that local government is not eligible for additional state funds if it has been subject to legislative committee's audit within specified timeframe or if it fails to submit affirmation to legislative delegation; requires each legislative committee to report such local governments to presiding officers & appropriations chairs. Effective Date: July 1, 2026

Current Committee of Reference: House Intergovernmental Affairs Subcommittee

---

HB 1183 **Transportation Infrastructure Land Development Regulations** by Cross

Transportation Infrastructure Land Development Regulations: Requires governing body of county or municipality to adopt ordinance, & governing body of special district to adopt resolution, establishing specified transit-oriented development (TOD) zones & rural livable urban village (LUV) areas; requires local government to zone for mixed use, & authorize certain commercial uses for, lots within TOD zones & rural LUV areas; prohibits local government from imposing certain building regulations in specified TOD zones & rural LUV areas; prohibits reduction or elimination of TOD zones after establishment; prohibits local government from imposing certain regulations for lots that contain historic property; provides private cause of action; authorizes award of specified relief; provides that prevailing plaintiff is entitled to attorney fees & costs; provides waiver of sovereign immunity. Effective Date: July 1, 2026

Current Committee of Reference: House Intergovernmental Affairs Subcommittee

---

SB 1196 **Waste Facilities** by Sharief

Waste Facilities; Prohibiting a local government or the Department of Environmental Protection, respectively, from issuing a construction permit for certain solid waste disposal and waste-to-energy facilities under certain circumstances, etc. Effective Date: 7/1/2026

Current Committee of Reference: Senate Environment and Natural Resources

---

HB 1217 **Prohibited Governmental Policies Regulating Greenhouse Gas Emissions** by Snyder

Prohibited Governmental Policies Regulating Greenhouse Gas Emissions: Prohibits governmental entities from adopting certain net zero policies; prohibits governmental entities from using government funds in any manner that supports, implements, or advances certain net zero policies; prohibits governmental entities from imposing tax, fee, penalty, charge, offset, or assessment to advance certain net zero policies; requires each governmental entity to annually submit to Department of Revenue certain affidavit; prohibits governmental entities from implementing, administering, or enforcing certain programs. Effective Date: July 1, 2026

Current Committee of Reference: House Economic Infrastructure Subcommittee

SB 1220 **Transportation** by Massullo, Jr.

Transportation; Providing requirements for an infrastructure development and improvement component included in a port's strategic plan; requiring the Department of Transportation to coordinate with the Department of Commerce, specified ports, and the Federal Government for a certain purpose; revising duties of the Department of Transportation relating to airport systems in this state; providing that the department serves as the primary point of contact for statewide topographic aerial LiDAR procurement and certain cost sharing, etc. Effective Date: July 1, 2026

Current Committee of Reference: Senate Transportation

HB 1227 **Preemption to the State** by Oliver

Preemption to the State: Prohibits counties, municipalities, & special districts, respectively, from substantially burdening free exercise of religion by adopting or enforcing certain ordinances, regulations, resolutions, rules, or other policies; prohibits local enforcement agency from denying issuance of certificate of occupancy to owner of residential or commercial property based on noncompliance with Florida-friendly landscaping ordinances; prohibits local enforcement agency from denying issuance of building permit for alteration, modification, or repair of single-family residential structure; prohibits local enforcement agency from requiring building permit for construction of playground equipment or fence on certain property; prohibits local governments from adopting or enforcing certain ordinances, regulations, resolutions, rules, charter provisions, or other policies or from taking any action to license or otherwise regulate mutual benefit corporations; revises criteria for business to be considered home-based business as it relates to local government regulation of parking. Effective Date: upon becoming a law

Current Committee of Reference: House Intergovernmental Affairs Subcommittee

SB 1234 **Building Permits and Inspections** by DiCeglie

Building Permits and Inspections; Providing for expiration of certain building permits issued by a county; requiring the Florida Building Commission to modify the Florida Building Code to exempt from building permit requirements the installation of certain walls or barriers; providing for expiration of certain building permits issued by a local government; revising definitions and defining terms; requiring certain services to be subject to an agreement, rather than a written contract, etc. Effective Date: July 1, 2026

Current Committee of Reference: Senate Regulated Industries

HB 1251 **Expenditure of Public Funds by Local Governments** by Shoaf

Expenditure of Public Funds by Local Governments: Prohibits local governments from expending public funds for specified purposes; prohibits acceptance of public funds from local governments for lobbying; authorizes filing of complaints with Commission on Ethics alleging violations; requires commission to investigate & provide report of its findings to certain entities; requires commission to adopt rules. Effective Date: July 1, 2026

Current Committee of Reference: House Intergovernmental Affairs Subcommittee

HB 1275 **Prohibition on Levying Ad Valorem Taxes on Tangible Personal Property** by LaMarca

Prohibition on Levying Ad Valorem Taxes on Tangible Personal Property: Proposes amendment to State Constitution to prohibit levying of ad valorem taxes on tangible personal property by certain entities.

Current Committee of Reference: House Ways & Means Committee

HB 1277 **Prohibition on Levying Ad Valorem Taxes on Tangible Personal Property** by LaMarca

Prohibition on Levying Ad Valorem Taxes on Tangible Personal Property: Conforms provisions to proposed amendments made to State Constitution which prohibit levying ad valorem taxes on tangible personal property by counties, school districts, & municipalities; removes provisions relating to property appraiser's assessments & effect of determinations by value adjustment boards; repeals provisions relating to extending date for filing tangible personal property tax returns; repeals provisions relating to erroneous returns & estimates of assessment when no return is filed; repeals provisions relating to tax returns to show all exemptions & claims; repeals provisions relating to exemption of renewable energy source devices; repeals provisions relating to exemption for tangible personal property; repeals provisions relating to uncollectible personal property taxes & correction of tax roll; repeals provisions relating to attachment of tangible personal property in case of removal; provides transitional provision. Effective Date: on the effective date of the amendment to the State Constitution proposed by HJR 1275 or a similar joint resolution having substantially the same specified intent and purpose

Current Committee of Reference: House Ways & Means Committee

HB 1303 **Department of Financial Services** by Miller

Department of Financial Services: Establishes Florida Agency for Fiscal Oversight within DFS; provides purpose & duties of agency; requires agency to conduct audit of certain local governments; authorizes agency to request certain information; provides penalties for noncompliance with such request; removes requirement that specified hotline be operated for certain amount of time each day; removes requirement that hotline be advertised in specified manner; requires specified employees to take certain training annually; requires first training be completed by specified deadline; requires certain employees who report information to Florida Agency for Fiscal Accountability be afforded same protection as whistle-blowers; prohibits local governments from executing certain documents with specified provisions; provides that such contracts are void; requires local governments submit certain report to DFS; requires counties to use certain contract tracking system. Effective Date: July 1, 2026

Current Committee of Reference: House Insurance & Banking Subcommittee

HB 1307 **Unauthorized Aliens** by Jacques

Unauthorized Aliens: Prohibits unauthorized aliens from receiving certain licensing or certification, financial assistance, & claim reimbursement; requires certain procedures, instruction, & testing to be conducted in English; prohibits alternate language accommodations; requires employers & licensees to verify employment eligibility & citizenship status, respectively, before taking certain actions; provides civil cause of action; provides penalties; authorizes certain complains; requires Office of Financial Regulation to conduct random audits; creates rebuttable presumption against unauthorized out-of-state drivers; provides exemptions & standard of proof; provides requirements for law enforcement officers, DHSMV, insurers, & OIR; provides administrative penalties; authorizes private cause of action; prohibits certain financial institutions from accepting certain forms of personal identification. Effective Date: upon becoming a law

Current Committee of Reference: House Commerce Committee

HB 1329 **Local Government Spending** by Benarroch

Local Government Spending: Requires posting of county & municipality budgets to allow members of public to download & review certain information & data in specified formats; requires certain officers to perform a specified exercise before final adoption of budget; prohibits local governments from

expending public funds for purpose of diversity, equity, & inclusion; prohibits local governments from contracting with private vendors for services for promoting, advocating for, or providing training or education on diversity, equity, & inclusion; requires all local governments make specified certification to CFO by date certain each year; requires CFO to conduct specified evaluation; specifies that local governments that violate certain provisions are subject to administrative fines; requires such fines to be deposited in Insurance Regulatory Trust Fund. Effective Date: July 1, 2026

Current Committee of Reference: House Intergovernmental Affairs Subcommittee

---

SB 1342 **Transportation Infrastructure Land Development Regulations** by Rouson

Transportation Infrastructure Land Development Regulations; Citing this act as the “Transit-Oriented Development Act” or the “TOD Act”; requiring the governing body of a county or municipality to adopt an ordinance, and the governing body of a special district to adopt a resolution, establishing specified transit-oriented development (TOD) zones and rural livable urban village (LUV) areas by a certain date; prohibiting a local government from imposing certain building regulations in specified TOD zones and rural LUV areas; prohibiting the reduction or elimination of TOD zones after establishment; prohibiting a local government from imposing certain regulations for lots that contain historic property; providing a waiver of sovereign immunity, etc. Effective Date: 7/1/2026

Current Committee of Reference: Senate Community Affairs

SB 1366 **Claims Against the Government** by Brodeur

Claims Against the Government; Increasing the statutory limits on the liability of the state and its agencies and subdivisions for tort claims; requiring the Department of Financial Services, beginning on a specified date and every 5 years thereafter, to adjust the limitations of liability for claims; limiting attorney fees based on the amount of funds recovered; authorizing the Legislature to limit attorney fee awards in a claim bill or reserve any portion of the proceeds of a claim bill to the claimant, etc. Effective Date: 10/1/2026

Current Committee of Reference: Senate Judiciary

SB 1380 **Unauthorized Aliens** by Martin

Unauthorized Aliens; Prohibiting the Department of Financial Services from issuing a license or certification to unauthorized aliens; authorizing a county to require a borrower to provide proof of being lawfully present in the United States; authorizing the Division of Risk Management to approve or deny claims relating to a minor who is an unauthorized alien; requiring that certain procedures, instruction, and testing be conducted in English; prohibiting certain entities and corporations from providing down payment assistance to unauthorized aliens, etc. Effective Date: Upon becoming a law

Current Committee of Reference: Senate Banking and Insurance

HB 1389 **Affordable Housing** by Redondo

Affordable Housing: Requires counties & municipalities, respectively, to authorize multifamily & mixeduse residential as allowable uses for specified parcels of land if certain conditions are met; requires counties & municipalities, respectively, to eliminate parking requirements for proposed development; authorizes board of county commissioners or governing body of municipality to exempt specified portions of property within multifamily projects & accessory dwelling units that are used to provide affordable housing. Effective Date: July 1, 2026

Current Committee of Reference: House Housing, Agriculture & Tourism Subcommittee

---

HB 1395 **Artificial Intelligence** by Rizo

Artificial Intelligence: Prohibits governmental entities from extending or renewing contract with specified entities; prohibits governmental entities from taking certain actions relating to contracting for AI

technology, software, or products unless certain requirements are met; prohibits governmental entities from entering into contracts for AI technology, software, or products under certain conditions; provides rights of Floridians relating to AI use; requires consent for minors to create new or maintain existing companion chatbot platforms; requires companion chatbot platforms to make certain disclosures & institute certain measures to protect minors; prohibits AI technology companies from selling or disclosing personal information of users unless information is deidentified; prohibits commercial use of individual's name, image, or likeness created through AI without consent; provides for enforcement; provides for civil penalties & damages; provides for private causes of action. Effective Date: July 1, 2026

Current Committee of Reference: House Information Technology Budget & Policy Subcommittee

---

HB 1403 **Deferred Compensation Plans for Public Employees** by Salzman

Deferred Compensation Plans for Public Employees: Authorizes inclusion of automatic enrollment arrangement in government employee's deferred compensation plan; requires that automatic enrollment arrangement be established with default contribution rate; authorizes periodic reenrollment of specified government employees; authorizes periodic resetting of contribution rates for specified government employees; requires that automatic enrollment arrangement provide employees ability to make certain elections regarding contributions; requires that plan provide for default investment into which contributions must be placed under specified circumstance; authorizes counties, municipalities, political subdivisions, & constitutional county officers to adopt automatic enrollment arrangements for specified deferred compensation programs; provides that deferred compensation plan of state may adopt automatic enrollment arrangement only upon approval of Legislature; requires that certain deduction of wages or salary of employees be treated in specified manner. Effective Date: July 1, 2026

Current Committee of Reference: House Government Operations Subcommittee

---

HB 1409 **THC** by Berfield

THC: Provides that marijuana testing laboratory may acquire hemp & hemp extract only from certain businesses; prohibits marijuana testing laboratory from selling, distributing, or transferring hemp or hemp extract from certain businesses; requires marijuana testing laboratory to separate marijuana received from certain entities from hemp or hemp extract received from certain entities; revises requirements for sale & distribution of hemp extract; prohibits businesses or food establishments from possessing hemp or hemp extract products that are attractive to children; prohibits unpermitted business sales, street sales, or festival sales of hemp extract; prohibits business permitted to sell hemp or hemp extract from being located in certain areas; provides requirements for businesses permitted to sell hemp or hemp extract; including THC-infused beverages in list of products prohibited for sale to person under 21 years of age; provides penalty for hemp extract possessed, manufactured, delivered, held, offered for sale, distributed, or sold by certain entities in violation of specified provisions. Effective Date: July 1, 2026

Current Committee of Reference: House Industries & Professional Activities Subcommittee

---

HB 1417 **Department of Environmental Protection** by LaMarca

Department of Environmental Protection: Repeals, revises, & creates various provisions relating to Environmental Regulation Commission; Acquisition & Restoration Council; central sewer system connections; wastewater treatment systems; aerobic treatment units; basin management action plans; type 2 transfer of Florida Communities Trust from DEP to Acquisition & Restoration Council; onsite sewage treatment & disposal system reports & permits; air pollution permits & license fees; small community sewer construction grants; wastewater services; & fertilizer inspection fees. Effective Date: July 1, 2026

Current Committee of Reference: House Natural Resources & Disasters Subcommittee

---

SB 1420 **Local Utility Revenues** by DiCeglie

Local Utility Revenues; Prohibiting counties and municipalities, respectively, from transferring for specified purposes revenues collected from providing utility services; requiring revenue surpluses to be returned to the ratepayers; requiring county and municipal utilities, respectively, to develop budget forecasts and strategies that meet certain requirements; prohibiting counties and municipalities, respectively, from charging a higher rate or adding a surcharge to certain customers, etc. Effective Date: 7/1/2026

Current Committee of Reference: Senate Regulated Industries

SB 1434 **Infill Redevelopment** by Calatayud

Infill Redevelopment; Creating the “Infill Redevelopment Act”; requiring a local government to permit the development of certain qualifying parcels up to a certain density and intensity; prohibiting a local government from imposing certain restrictions or requirements on the development of certain qualifying parcels; requiring developers of qualifying parcels to maintain a specified buffer between new developments and single-family homes and townhouses under certain circumstances; prohibiting a local government from adopting or enforcing certain local laws, ordinances, or regulations, etc. Effective Date: Upon becoming a law

Current Committee of Reference: Senate Community Affairs

SB 1444 **Preemption to the State** by Martin

Preemption to the State; Providing for preemption of all matters relating to the regulation of religious services and gatherings; prohibiting counties, municipalities, and special districts, respectively, from substantially burdening the free exercise of religion by adopting or enforcing certain ordinances, regulations, resolutions, rules, or other policies; prohibiting a local enforcement agency from denying the issuance of a certificate of occupancy to an owner of residential or commercial structure based on noncompliance with Florida-friendly landscaping ordinances in certain circumstances; waiving sovereign immunity in accordance with specified laws, etc. Effective Date: Upon becoming a law

Current Committee of Reference: Senate Community Affairs

HB 1451 **Utility Services** by Busatta

Utility Services: Requires certain public meetings as condition precedent to effectiveness of new or extended agreement under which municipality will provide specified utility services in other municipalities or unincorporated areas; limits portion of certain utility revenues that municipality may use to fund or finance general government functions; requires excess revenues to be reinvested into municipal utility or returned to customers; requires municipalities that provide specified utility services to report certain information by specified date, & annually thereafter, to PSC; requires PSC to compile such information & submit report by specified date, & annually thereafter, to Governor & Legislature. Effective Date: July 1, 2027

Current Committee of Reference: House Economic Infrastructure Subcommittee

---

HB 1465 **Restrictions on Local Government Regulations After a Hurricane** by Andrade

Restrictions on Local Government Regulations After a Hurricane: Revises circumstances under which certain land use regulations may be enforced; revising persons authorized to bring certain civil actions; requires certain pending applications to be processed in a specified manner. Effective Date: July 1, 2026

Current Committee of Reference: House Intergovernmental Affairs Subcommittee

---

SB 1506 **Civil Litigation** by Yarborough

Civil Litigation; Revising the criteria that the court must consider in determining whether an award of money damages is excessive or inadequate, etc. Effective Date: 7/1/2026

Current Committee of Reference: Senate Judiciary

SB 1510 **Department of Environmental Protection** by Massullo, Jr.

Department of Environmental Protection; Deleting provisions creating the Environmental Regulation Commission; requiring that residential properties of a specified size located in a certain area connect to a central sewer system or upgrade to a specified type of nutrient-reducing wastewater treatment system; providing that remediation plans for certain properties may not prohibit or require certain actions relating to onsite sewage treatment and disposal systems; providing for a type 2 transfer of powers and functions of the Florida Communities Trust from the department to the Acquisition and Restoration
Council; revising legislative findings and intent for the Florida Communities Trust, etc. Effective Date: 7/1 /2026

Current Committee of Reference: Senate Environment and Natural Resources

---

SB 1548 **Affordable Housing** by Calatayud

Affordable Housing; Requiring counties and municipalities, respectively, to authorize certain residential use on property owned by a county, municipality, or school district under certain circumstances; revising the definition of the term “person”; revising a prohibition on discriminatory practices in land use decisions and in permitting of development to include housing that is affordable; waiving the state’s sovereign immunity for certain causes of action based upon housing discrimination, etc. Effective Date: 7/1/2026

Current Committee of Reference: Senate Community Affairs

HB 1553 **Evidence of Damages to Prove or Rebut Medical Expenses in Personal Injury or Wrongful Death Actions** by Brackett

Evidence of Damages to Prove or Rebut Medical Expenses in Personal Injury or Wrongful Death Actions: Revises provisions relating to evidence that is admissible to demonstrate past & future medical expenses in personal injury & wrongful death actions. Effective Date: upon becoming a law

Current Committee of Reference: House Civil Justice & Claims Subcommittee

---

SB 1558 **Admissible Evidence in Personal Injury or Wrongful Death Actions** by Massullo, Jr.

Admissible Evidence in Personal Injury or Wrongful Death Actions; Providing that evidence admissible in personal injury or wrongful death actions may be used for rebutting, as well as for proving, the amount of certain damages; providing that such evidence may be offered by any party, etc. Effective Date: 7/1/2026

Current Committee of Reference: Senate Judiciary

SB 1566 **Local Government Spending** by DiCeglie

Local Government Spending; Citing this act as the “Local Government Financial Transparency and Accountability Act”; revising the timeframe during which tentative budgets, and the length of time for which final budgets, must be posted on county websites; revising the timeframe during which a public hearing for an amendment to a county budget must be advertised; prohibiting a local government from expending public funds for the purpose of diversity, equity, and inclusion; requiring the Chief Financial Officer to conduct a specified evaluation, etc. Effective Date: 7/1/2026

Current Committee of Reference: Senate Community Affairs

SB 1572 **Department of Financial Services** by DiCeglie

Department of Financial Services; Establishing the Florida Agency for Fiscal Oversight within the Department of Financial Services; requiring local governments to notify the agency after authorizing specified referenda; deleting a requirement that a specified hotline be operated for a certain amount of time each day; requiring specified employees to take a certain training annually; requiring that certain employees who report information to the Florida Agency for Fiscal Oversight be afforded the same protection as whistle-blowers, etc. Effective Date: 7/1/2026

Current Committee of Reference: Senate Banking and Insurance

SB 1608 **Assessment of Property with Decreasing Just Valuation** by Polsky

Assessment of Property with Decreasing Just Valuation; Prohibiting increases in certain assessed valuations if the just value of the property has decreased since the previous assessment, etc. Effective Date: On the effective date of the amendment to the State Constitution proposed by SJR 1610 or a similar joint resolution having substantially the same specific intent and purpose, if such amendment to the State Constitution is approved at the next general election or at an earlier special election specifically authorized by law for that purpose

Current Committee of Reference: Senate Finance and Tax

SB 1610 **Assessment of Property with Decreasing Just Valuation** by Polsky

Assessment of Property with Decreasing Just Valuation; Proposing amendments to the State Constitution to prohibit an increase in the value of certain assessments for property with a decreasing just valuation and to provide an effective date, etc.

Current Committee of Reference: Senate Finance and Tax

SB 1612 **Electronic Payments to Local Governments** by DiCeglie

Electronic Payments to Local Governments; Revising legislative intent; requiring each unit of local government to accept electronic payment online for payments received by and financial obligations owed to the unit of local government, etc. Effective Date: 7/1/2026

Current Committee of Reference: Senate Community Affairs

SB 1614 **Florida Building Code** by Leek

Florida Building Code; prohibiting a local government from receiving state funds through a local funding initiative request to its legislative designation unless it has expended all funds through enforcing the Florida Building Code on authorized uses and does not have excess funds; providing that a local government is not eligible for additional state funds if it has been subject to a legislative committee's audit within a specified timeframe or if it fails to submit an affirmation to its legislative delegation, etc. Effective Date: 7/1/2026

Current Committee of Reference: Senate Community Affairs

SB 1628 **Net-zero Policies by Governmental Entities** by Ávila

Net-zero Policies by Governmental Entities; Prohibiting governmental entities from adopting or requiring the adoption of net-zero policies; prohibiting governmental entities from expending government funds to support, implement, or advance net-zero policies; prohibiting governmental entities from imposing taxes, fees, penalties, charges, offsets, or assessments to advance net-zero policies; prohibiting governmental entities from implementing, administering, or enforcing a program that functions as a cap-and-trade program, etc. Effective Date: July 1, 2026

Current Committee of Reference: Senate Environment and Natural Resources

SB 1662 **Prohibited Preferences** by McClain

Prohibited Preferences; Prohibiting executive agencies from using racial or gender set-asides, preferences, or quotas when making certain decisions; revising factors local governments are authorized to consider in making decisions regarding local bids and contracts for public construction works; revising the criteria each agency uses to evaluate professional services; deleting a provision requiring consideration of minority and gender representation when making appointments to the statewide advisory board for the Florida Small Business Development Center Network; deleting provisions requiring that preferences be given to specified entities seeking to attract minority conventions to Florida, etc. Effective Date: 7/1/2026

Current Committee of Reference: Senate Governmental Oversight and Accountability

SB 1724 **Utility Services** by Martin

Utility Services; Requiring certain public meetings as a condition precedent to the effectiveness of a new or extended agreement under which a municipality will provide specified utility services in other municipalities or unincorporated areas; limiting the portion of certain utility revenues which a municipality may use to fund or finance general government functions; revising provisions relating to permissible rates, fees, and charges imposed by municipal water and sewer utilities on customers located outside the municipal boundaries; requiring municipalities that provide specified utility services to report certain information by a specified date, and annually thereafter, to the Florida Public Service Commission, etc. Effective Date: Except as otherwise expressly provided in this act, this act shall take effect July 1, 2026

Current Committee of Reference: Senate Regulated Industries

SB 1726 **Housing** by Smith

Housing; Citing this act as the “Real Affordable Housing Relief Act”; deleting provisions prohibiting municipalities, counties, or other entities of local government from adopting or maintaining certain laws relating to rent control; authorizing counties and municipalities to create community land bank programs for a certain purpose; providing requirements for the sale of certain property to land banks; providing conditions for the subsequent resale of property acquired by land banks; requiring the Department of Financial Services to adopt a home resiliency grading scale for a specified purpose; creating the Affordable Housing Construction Loan Program for a certain purpose, etc. Effective Date: July 1, 2026

Current Committee of Reference: Senate Community Affairs

Generated 1/23/2026 06:55 AM

IV. 2026.01.30 - The Village of Palmetto Bay Weekly Bill Report

The Village of Palmetto Bay
Ordered by Bill Number

HB 0037 **Removal, Storage, and Cleanup of Electric Vehicles** by Nix, Jr.

Removal, Storage, and Cleanup of Electric Vehicles: Requires counties to establish daily administration fee for proper storage of certain electric vehicles; authorizes municipalities to establish daily administration fee for proper storage of certain electric vehicles; provides maximum amount for such fees; defines "daily administration fee" & "proper storage"; provides that motor vehicle insurers are not required to pay certain costs; provides that reasonable fee for service includes any daily administration fee. Effective Date: July 1, 2026

Current Committee of Reference: House State Affairs Committee

SB 0044 **Electronic Payment of Public Records Fees** by Rouson

Electronic Payment of Public Records Fees; Requiring an agency subject to ch. 119, F.S., to provide an electronic option for payment of fees associated with a public records request, etc. Effective Date: July 1, 2026

Current Committee of Reference: Senate Governmental Oversight and Accountability

SB 0048 **Housing** by Gaetz

Housing; Defining the term “primary dwelling unit”; requiring local governments to adopt, by a specified date, an ordinance to allow accessory dwelling units to be approved in certain areas; requiring the Office of Program Policy Analysis and Government Accountability to evaluate the efficacy of using mezzanine finance and the potential of tiny homes for specified purposes, etc. Effective Date: 7/1/2026

Current Committee of Reference: No Current Committee

HB 0067 **Reduction of Annual Assessment Increases for Homestead Property** by Holcomb

Reduction of Annual Assessment Increases for Homestead Property: Proposes State Constitutional amendment reducing maximum amount that homestead property’s assessed value may increase annually.

Current Committee of Reference: No Current Committee

HB 0071 **Distribution of Funds to Homestead Property Owners** by Holcomb

Distribution of Funds to Homestead Property Owners: Creates Homestead Property Tax Relief Program within DFS; defines “eligible homesteader”; requires CFO to annually issue warrants of specified amount to certain homestead property owners beginning & ending on specified dates; requires CFO to work with county property appraisers for specified purpose; provides future repeal. Effective Date: July 1, 2026

Current Committee of Reference: No Current Committee

SB 0092 **Employee Protections** by Gaetz

Employee Protections; Providing that public officers, public employees, and local government attorneys commit a breach of the public trust when they initiate adverse personnel actions against specified agency employees or independent contractors under certain circumstances; prohibiting agencies and independent contractors from taking specified actions against employees or certain persons for disclosing certain information to the Commission on Ethics; requiring that information disclosed include specified violations or alleged violations; providing that specified provisions protect employees and persons who submit written complaints to the commission or provide information to an investigator during an investigation of a complaint or referral, etc. Effective Date: 1/1/2027

Current Committee of Reference: Senate Rules

HB 0101 **Utility Terrain Vehicles** by Gentry

Utility Terrain Vehicles: Authorizes utility terrain vehicle (UTV) to be operated during all hours; authorizes operation of UTVs on certain roadways & on certain parts of State Highway System; authorizes DOT to prohibit use of UTVs under certain circumstances; authorizes persons possessing certain licenses to operate UTV; requires owners or operators of UTV to comply with certain requirements & regulations; authorizes county or municipality to restrict operation of UTVs under certain circumstances; provides civil penalties; requires DHSMV to issue license plate to owner or lessee of vehicle registered as UTV upon payment of certain taxes & fees; requires that license plates for UTVs comply with specified provisions. Effective Date: January 1, 2027

Current Committee of Reference: House Government Operations Subcommittee

HB 0103 **Local Business Taxes** by Botana

Local Business Taxes: Repeals provisions related to local business taxes & authorizes certain municipalities to continue to impose business taxes. Effective Date: July 1, 2026

Current Committee of Reference: House State Affairs Committee

---

HB 0105 **Local Government Enforcement Actions** by Brackett

Local Government Enforcement Actions: Prohibits certain enforcement actions by counties & municipalities; authorizes persons or business entities subject to such actions to submit request for review; requires counties & municipalities to review such actions & respond within specified time period; requires counties & municipalities to establish & maintain rules; authorizes filing of legal action & providing legal remedies in certain circumstances; requires that such action be filed within specified time period; provides for certain protections from retaliation; authorizes filing of certain complaints in specified circumstances; provides for preemption. Effective Date: October 1, 2026

Current Committee of Reference: House Judiciary Committee

SB 0118 **Assessments Levied on Recreational Vehicle Parks** by Truenow

Assessments Levied on Recreational Vehicle Parks; Providing that certain special assessments on recreational vehicle parks levied by counties, municipalities, and special districts, respectively, may not be levied against a certain portion of a recreational vehicle parking space or campsite; requiring counties, municipalities, and special districts, respectively, to consider a recreational vehicle park’s occupancy rates for a certain purpose, etc. Effective Date: Upon becoming a law

Current Committee of Reference: Senate Finance and Tax

SB 0122 **Local Business Taxes** by Truenow

Local Business Taxes; Repealing provisions relating to local business taxes; authorizing certain municipalities to continue to impose a business tax; authorizing such municipalities to revise the definition of the term “merchant” in a specified manner, etc. Effective Date: 7/1/2026

Current Committee of Reference: Senate Finance and Tax

HB 0139 **Adverse Personnel Actions and Ethics Complaints** by Maney

Adverse Personnel Actions and Ethics Complaints: Prohibits agencies & independent contractors from taking specified actions against employees for disclosing certain information to Commission on Ethics; requires that information disclosed include specified violations or alleged violations; requires disclosure of specified information to commission; provides that specified provisions protect employees & persons who submit written complaints to commission or provide information to investigator during investigation of complaint; authorizes certain employees or applicants for employment to file complaints in accordance with specified provisions; authorizes such employees or applicants to pursue specified administrative remedy or civil action within specified timeframe; authorizes local public employees to file complaint with appropriate local governmental authority; specifies requirements for administrative procedures created by local governmental authorities; authorizes such employee to bring civil actions in court of competent jurisdiction under specified conditions; requires specified relief; provides that it is affirmative defense to certain actions that adverse personnel action was predicated on grounds other than exercising of certain protected rights; requires commission to deliver complaints & any amendment thereto to agency conducting certain investigation, upon agency's written request; requires commission to deliver complaints & any amendment thereto to certain persons upon notarized written request.
Effective Date: July 1, 2026

Current Committee of Reference: House Government Operations Subcommittee

---

HB 0145 **Suits Against the Government** by McFarland

Suits Against the Government: Increases statutory limits on liability for tort claims against state & its agencies & subdivisions; authorizes subdivision of state to settle claim in excess of statutory limit without legislative action regardless of insurance coverage limits; prohibits insurance policy from conditioning benefits on enactment of claim bill; specifies that limitations in effect on date claim accrues apply to that claim; revises period within which certain claims must be presented; revises exceptions relating to instituting tort claims against state or agencies or subdivisions; revises period after which failure of certain entities to make final disposition of claim shall be deemed

final denial of claim for certain purposes; revises statute of limitations for tort claims against state or agencies or subdivisions & exceptions thereto. Effective Date: October 1, 2026

Current Committee of Reference: No Current Committee

HB 0149 **Maximum Millage Rates for the 2027-2028 Fiscal Year** by Chamberlin

Maximum Millage Rates for the 2027-2028 Fiscal Year: Provides method for determining the maximum county & school millage rates for fiscal year 2027-2028; provides for future repeal. Effective Date: July 1, 2026

Current Committee of Reference: House Select Committee on Property Taxes

---

HB 0201 **Elimination of Non-school Property Tax for Homesteads** by Steele

Elimination of Non-school Property Tax for Homesteads: Proposes amendment to State Constitution to exempt homestead property from all ad valorem taxation other than school district levies, prohibit counties and municipalities from reducing total funding for law enforcement, and provide an effective date.

Current Committee of Reference: House Ways & Means Committee

HB 0203 **Phased Out Elimination of Non-school Property for Homesteads** by Miller

Phased Out Elimination of Non-school Property for Homesteads: Proposes amendment to State Constitution to increase exemption for homestead property from all ad valorem taxation other than school district levies annually for 10 years by a certain amount, to make homestead property exempt from all ad valorem taxation other than school district levies beginning in a specified year, to prohibit local governments from reducing total funding for services provided by law enforcement, firefighters, and other first responders, and provide an effective date.

Current Committee of Reference: No Current Committee

HB 0205 **Elimination of Non-School Property Tax for Homesteads for Persons Age 65 or Older** by Porras

Elimination of Non-School Property Tax for Homesteads for Persons Age 65 or Older: Proposes amendment to State Constitution to exempt homestead property from all levies other than school district levies for persons who have attained age 65, prohibit counties and municipalities from reducing total funding for law enforcement, and provide an effective date.

Current Committee of Reference: House Ways & Means Committee

HB 0207 **Assessed Home Value Homestead Exemption of Non-school Property Tax** by Abbott

Assessed Home Value Homestead Exemption of Non-school Property Tax: Proposes amendment to State Constitution to add a homestead exemption for levies other than school levies equal to 25 percent of the remaining assessed value after applying existing exemptions, provide construction, prohibit counties and municipalities from reducing total funding for law enforcement, and provide an effective date.

Current Committee of Reference: House State Affairs Committee

---

SB 0208 **Land Use and Development Regulations** by McClain

Land Use and Development Regulations; Requiring that the amount of certain application fees reasonably relate to certain costs; requiring that local government comprehensive plans and land development regulations include factors for assessing the compatibility of certain residential uses; prohibiting a local government from denying certain applications on compatibility grounds if the applicant has proposed certain measures; requiring that the denial of an application specify certain information; providing that a local government’s approval of an application may include certain requirements or conditions, etc. Effective Date: 7/1/2026

Current Committee of Reference: Senate Rules

HB 0209 **Property Insurance Relief Homestead Exemption Non-school Property Tax** by Busatta

Property Insurance Relief Homestead Exemption Non-school Property Tax: Proposes amendment to State Constitution to increase by $200,000 the exemption for homestead property from all ad valorem taxation other than school district levies for homestead properties that have property insurance, to prohibit local governments from reducing total funding for first responders, and to provide an effective date. Effective Date: Not Specified

Current Committee of Reference: No Current Committee

HB 0211 **Accrued Save-Our-Homes Property Tax Benefit for Non-school Property Tax** by Overdorf

Accrued Save-Our-Homes Property Tax Benefit for Non-school Property Tax: Proposes amendment to State Constitution to increase the maximum value of the accrued Save-Our-Homes benefit which may be transferred to a new homestead for all levies other than school district levies, prohibit counties and municipalities from reducing total funding for law enforcement, and provide an effective date.

Current Committee of Reference: House Ways & Means Committee

HB 0213 **Modification of Limitations on Property Assessment Increases** by Griffitts Jr.

Modification of Limitations on Property Assessment Increases: Proposes amendment to State Constitution to modify limitations on assessment increases for both homestead & nonhomestead property, prohibit local governments from reducing total funding for services provided by law
enforcement, firefighters, & other first responders, & provide an effective date. Effective Date: January 1, 2027

Current Committee of Reference: No Current Committee

HB 0215 **Ad Valorem Taxation** by Albert

Ad Valorem Taxation: Revises Save-Our-Homes portability benefits available to married persons establishing joint homestead; prohibits increase in prior year’s adopted millage rate from going into effect unless approved by specified vote; authorizes DOR to adopt emergency rules; provides for future expiration. Effective Date: January 1, 2027

Current Committee of Reference: House State Affairs Committee

---

HB 0217 **Land Use Regulations** by Abbott

Land Use Regulations: Defines "impacted local government"; provides for retroactive application.
Effective Date: July 1, 2026

Current Committee of Reference: House Intergovernmental Affairs Subcommittee

---

SB 0218 **Land Use Regulations** by Gaetz

Land Use Regulations; Defining the term “impacted local government”, etc. Effective Date: July 1, 2026

Current Committee of Reference: Senate Judiciary

HB 0225 **Consumer Fairness in Utility Rates** by Robinson, F.

Consumer Fairness in Utility Rates: Requires certain municipalities to impose same utility rates, fees, & charges on consumers within its municipal boundaries & boundaries of recipient municipality; prohibits such municipalities from imposing surcharges on consumers within boundaries of recipient municipality unless certain conditions are met; prohibits certain use of such surcharges; requires such municipalities to hold certain public hearings; requires certain municipalities to file specified reports with PSC; requires PSC to review certain consumer disputes & make certain determinations. Effective Date: July 1, 2026

Current Committee of Reference: House Economic Infrastructure Subcommittee

---

HB 0227 **Eligibility of Leasehold Interests for Homestead Exemptions** by Maney

Eligibility of Leasehold Interests for Homestead Exemptions: Revises circumstances under which persons may be deemed to have legal or beneficial & equitable title to certain property for homestead exemption purposes. Effective Date: upon becoming a law

Current Committee of Reference: House State Affairs Committee

---

HB 0239 **Standards for Storm Water Systems** by Grow

Standards for Storm Water Systems: Requires storm water systems in counties & municipalities, respectively, to comply with specified DOT standards; provides inspection requirements for such systems; specifies that certain local standards are superseded; provides finding of important state interest. Effective Date: July 1, 2026

Current Committee of Reference: House Intergovernmental Affairs Subcommittee

---

SB 0240 **Auxiliary Containers** by García

Auxiliary Containers; Preempting the regulation of auxiliary containers to the state; providing exceptions; requiring the Department of Environmental Protection to develop a uniform ordinance for the use and disposition of single-use, nonrecyclable auxiliary containers; prohibiting the sale or distribution of certain single-use auxiliary containers on lands managed by the Division of Recreation and Parks of the Department of Environmental Protection; repealing a provision relating to the regulation of polystyrene products preempted to the Department of Agriculture and Consumer Services, etc. Effective Date: 7/1/2026

Current Committee of Reference: Senate Appropriations Committee on Agriculture, Environment, and General Government

---

HB 0243 **Electric Bicycles** by Benarroch

Electric Bicycles: Provides requirements for operation of electric bicycles; provides penalties; creates Electric Bicycle Safety Task Force adjunct to DHSMV & provides requirements therefor; requires certain reports to Governor & Legislature by specified dates. Effective Date: upon becoming a law

Current Committee of Reference: House State Affairs Committee

---

SB 0260 **Removal, Storage, and Cleanup of Electric Vehicles** by Burgess

Removal, Storage, and Cleanup of Electric Vehicles; Requiring counties to establish a daily administration fee for the proper storage of certain electric vehicles; providing a maximum amount for such fees; providing applicability; defining the terms “daily administration fee” and “proper storage”; providing that motor vehicle insurers are not required to pay certain costs, etc. Effective Date: July 1, 2026

Current Committee of Reference: Senate Transportation

HB 0263 **Public Records** by Rizo

Public Records: Provides exemption from public records requirements for personal identifying & location information of current county administrators, deputy county administrators, assistant county administrators, city managers, deputy city managers, & assistant city managers, including names & personal identifying & location information of their spouses & children; provides for future legislative review & repeal; provides for retroactive application; provides statement of public necessity. Effective Date: July 1, 2026

Current Committee of Reference: House Intergovernmental Affairs Subcommittee

---

HB 0267 **Local Housing Assistance Plans** by Stark

Local Housing Assistance Plans: Authorizes county or eligible municipality to expend certain funds on

lot rental assistance for mobile home owners for specified time period; requires counties & eligible municipalities to develop certain strategies in their local housing assistance plans; provides that lot rental assistance is approved home ownership activity for certain purposes; authorizes certain funds to be provided to mobile home owners for rehabilitation & emergency repairs; removes prohibition that only certain percentage of funds may be used for manufactured housing. Effective Date: July 1, 2026 **Current Committee of Reference:** No Current Committee

SB 0270 **Homestead Property Exemption for Persons Age 65 or Older** by Bernard

Homestead Property Exemption for Persons Age 65 or Older; Proposing an amendment to the State Constitution to exempt homestead property from all levies other than school district levies for persons who have attained age 65, prohibit counties and municipalities from reducing total funding for law enforcement, etc.

Current Committee of Reference: Senate Finance and Tax

SB 0272 **Homestead Exemption for Persons 65 and Older** by Bernard

Homestead Exemption for Persons 65 and Older; Expanding the homestead exemption for persons 65 years and older to include a total exemption of homestead property from ad valorem taxation, other than for school district levies, for certain persons whose household income does not exceed a certain amount; authorizing the Department of Revenue to adopt emergency rules, etc. Effective Date: On the effective date of the amendment to the State Constitution proposed by SJR 270 or a similar joint resolution having substantially the same specific intent and purpose, if such amendment to the State Constitution is approved at the next general election or at an earlier special election specifically authorized by law for that purpose

Current Committee of Reference: Senate Finance and Tax

SB 0274 **Homestead Property Tax Benefits for Long-term Owners** by Bernard

Homestead Property Tax Benefits for Long-term Owners; Proposing amendments to the State Constitution to provide that the assessed value of homestead property may not increase after 20 years of ownership and residency, to provide an additional homestead tax exemption equal to 50 percent of the assessed value of property, other than school district levies, for persons who have owned and resided on the property as their permanent residence for 30 years or more, and to provide an effective date, etc.

Current Committee of Reference: Senate Finance and Tax

SB 0276 **Homestead Property Tax Benefits For Long-term Owners And Permanent Residents** by Bernard

Homestead Property Tax Benefits for Long-term Owners and Permanent Residents; Requiring that certain property be assessed at less than just value when the person who owns the property has owned and used the property as his or her permanent residence for a specified timeframe; providing that the assessed value of such property shall be a certain amount and may not be increased under certain circumstances; specifying a homestead exemption for certain long-term owners and residents; authorizing periods of ownership and residency to be aggregated, etc. Effective Date: On the effective date of the amendment to the State Constitution proposed by SJR 274 or a similar joint resolution having substantially the same specific intent and purpose, if such amendment to the State Constitution is approved at the next general election or at an earlier special election specifically authorized by law for that purpose

Current Committee of Reference: Senate Finance and Tax

SB 0278 **Limitation on the Assessed Value of New Homestead Property** by Bernard

Limitation on the Assessed Value of New Homestead Property; Proposing amendments to the State Constitution to limit the assessed value of new homestead property established after a change of ownership which had an assessed value of less than a certain amount to no more than 150 percent of the assessed value of the property for the preceding year for ad valorem taxation purposes and to provide an effective date, etc.

Current Committee of Reference: Senate Finance and Tax

SB 0280 **Assessment of Homestead Property** by Bernard

Assessment of Homestead Property; Limiting the assessed value upon change of ownership of homestead property having a prior assessed value below a certain amount when the person acquiring the property is entitled to a homestead exemption, etc. Effective Date: On the effective date of the amendment to the State Constitution proposed by SJR 278 or a similar joint resolution having substantially the same specific intent and purpose, if such amendment is approved at the next general election or at an earlier special election specifically authorized by law for that purpose

Current Committee of Reference: Senate Finance and Tax

SB 0282 **Limitation on the Assessed Value of Property Owned and Used for Commercial Purposes by Small Businesses** by Bernard

Limitation on the Assessed Value of Property Owned and Used for Commercial Purposes by Small Businesses; Proposing amendments to the State Constitution to limit the assessed value of real property owned and used for commercial purposes by a small business for ad valorem taxation purposes so that such assessed value may not exceed 3 percent or the percentage change in the Consumer Price Index, whichever is lower, and to provide an effective date, etc.

Current Committee of Reference: Senate Finance and Tax

SB 0286 **Assessment of Changes, Additions, or Improvements to Homestead Properties** by Bernard

Assessment of Changes, Additions, or Improvements to Homestead Properties; Revising the manner of assessing the value of changes, additions, or improvements to homestead property, etc. Effective Date: 7/1/2026

Current Committee of Reference: Senate Finance and Tax

SB 0290 **Department of Agriculture and Consumer Services** by Truenow

Department of Agriculture and Consumer Services; Prohibiting counties from enacting or enforcing any law that restricts or prohibits the use of gasoline-powered farm equipment or gasoline-powered landscape equipment or that distinguishes such equipment from any other equipment under certain circumstances; prohibiting an application for a development on an ecologically significant parcel in a lowdensity municipality from being administratively approved without an attestation provided by the developer; establishing the Florida Food Animal Veterinary Medicine Loan Repayment Program; revising the Florida Forest Service’s powers, authority, and duties, etc. Effective Date: 7/1/2026

Current Committee of Reference: Senate Rules

HB 0313 **Housing** by Nix, Jr.

Housing: Requires, rather than authorizing, local governments to adopt, by specified date, ordinance to allow accessory dwelling units in certain areas; requires that such ordinances apply prospectively; prohibits inclusion of certain requirements or prohibitions in such ordinances; removes requirement that application for building permit to construct accessory dwelling unit include certain affidavit; revises accessory dwelling units that apply toward satisfying certain component of local government's comprehensive plan; prohibits denial of homestead exemption for certain portions of property on specified basis; requires that rented accessory dwelling unit be assessed separately from homestead property & taxed according to its use; authorizes local government to provide density bonus incentive to landowners who make certain real property donations to assist in provision of affordable housing for military families; requires OPPAGA to evaluate efficacy of using mezzanine finance & potential of tiny homes for specified purposes; requires office to consult with certain entities; requires office to submit certain report to Legislature by specified date. Effective Date: July 1, 2026

Current Committee of Reference: House Intergovernmental Affairs Subcommittee

---

HB 0323 **Parking on Public Property** by Steele

Parking on Public Property: Defines "public property" & "publicly owned buildings or facilities"; requires local governments to refund owners of vehicles who pay fees to park on specified public property in certain circumstances;

requires local governments to carry over any unused portion of time for benefit of next vehicle owner who pays fee to park on such public property in certain circumstances; prohibits certain vehicles from being towed or issued traffic citation for specified time period after being parked on specified public property; prohibits local governments from allowing private business entities or enterprises to use specified public property for private parking purposes for fee. Effective Date: July 1, 2026

Current Committee of Reference: House Intergovernmental Affairs Subcommittee

---

SB 0332 **Public Meetings/Private Property Rights** by Bradley

Public Meetings/Private Property Rights; Providing that specified entities may meet in private with their attorneys to discuss certain claims concerning private property rights; requiring that such meetings be transcribed; providing that such transcripts become public records at specified times; providing for future legislative review and repeal; providing a statement of public necessity, etc. Effective Date: 7/1/2026

Current Committee of Reference: Senate Governmental Oversight and Accountability

---

HB 0337 **Food Insecure Areas** by Rayner

Food Insecure Areas: Authorizes local government to enact land development regulations to permit land use for small-footprint grocery store located in food insecure area; authorizes local government to include in its comprehensive plan provision permitting land use for small-footprint grocery store located in food insecure area; authorizes local government to require mandatory reporting of certain information from small-footprint grocery store. Effective Date: July 1, 2026

Current Committee of Reference: House Housing, Agriculture & Tourism Subcommittee

---

HB 0347 **Adoption and Display of Flags by Governmental Entities** by Borrero

Adoption and Display of Flags by Governmental Entities: Prohibits governmental entity from displaying, placing, or causing to be placed certain flags on real property; specifies flags governmental entity may display on such property; provides requirements for governmental entity that displays flag of United States; prohibits local government from adopting certain ordinances or regulations relating to flag of local government; provides that certain ordinances & regulations are void. Effective Date: July 1, 2026

Current Committee of Reference: House Government Operations Subcommittee

---

SB 0356 **Utility Terrain Vehicles** by Wright

Utility Terrain Vehicles; Authorizing the operation of a utility terrain vehicle (UTV) during all hours; authorizing the operation of UTVs on certain roadways; authorizing the Department of Transportation to prohibit the operation of UTVs under certain circumstances; requiring owners or operators of a UTV to comply with certain requirements and regulations, etc. Effective Date: January 1, 2027

Current Committee of Reference: Senate Appropriations Committee on Transportation, Tourism, and Economic Development

---

SB 0382 **Electric Bicycles** by Truenow

Electric Bicycles; Providing requirements for the operation of electric bicycles; prohibiting the operation of an electric bicycle above a certain speed under certain circumstances; creating the Electric Bicycle
Safety Task Force adjunct to the Department of Highway Safety and Motor Vehicles; requiring the Florida Highway Patrol and each police department and sheriff's office to maintain a certain list, beginning on a certain date, etc. Effective Date: Except as otherwise provided in this act, this act shall take effect upon becoming a law

Current Committee of Reference: Senate Fiscal Policy

HB 0399 **Land Use and Development Regulations** by Borrero

Land Use and Development Regulations: Requires transmittal & adoption of amendment to future land use element of comprehensive plan to be by majority vote of members of governing body; requires that local government comprehensive plans & land development regulations include specified factors for assessing compatibility of certain residential uses; requires that land development regulations incorporate certain standards or other measures for mitigating or minimizing potential incompatibility; requires local government staff to meet certain requirements before recommending denial of certain applications on compatibility grounds; requires OPPAGA to conduct specified study; provides study requirements; requires office to submit results of study to Legislature. Effective Date: upon becoming a law

Current Committee of Reference: House Housing, Agriculture & Tourism Subcommittee

---

HB 0425 **Historic Cemeteries Program** by Aristide

Historic Cemeteries Program: Requires local governments to approve applications from historic AfricanAmerican cemeteries to change land use category & zoning district of excess vacant land under certain conditions. Effective Date: July 1, 2026

Current Committee of Reference: House Intergovernmental Affairs Subcommittee

---

SB 0426 **Adoption and Display of Flags by Governmental Entities** by Yarborough

Adoption and Display of Flags by Governmental Entities; Prohibiting a governmental entity from displaying, placing, or causing to be placed certain flags on real property; providing a penalty; specifying flags a governmental entity may display on such property; prohibiting a local government from adopting certain ordinances or regulations relating to the flag of the local government, etc. Effective Date: 7/1 /2026

Current Committee of Reference: Senate Governmental Oversight and Accountability

---

HB 0433 **Department of Agriculture and Consumer Services** by Alvarez, D.

Department of Agriculture and Consumer Services: Prohibits counties & municipalities from enacting or enforcing any law that restricts or prohibits use of gasoline-powered farm equipment or gasolinepowered landscape equipment or that distinguishes such equipment from any other equipment; requires Acquisition & Restoration Council to determine whether certain surplused lands are suitable for bona fide agricultural purposes; prohibits local governmental entity from transferring future development rights for surplused lands determined to be suitable for bona fide agricultural purposes; requires DEP, in coordination with DACS, to determine whether state-owned conservation lands are suitable for bona fide agricultural purposes; authorizes DEP to surplus specified state-owned lands determined to be suitable for bona fide agricultural purposes; prohibits person from wearing or displaying item that displays words "concealed weapon permit" or "concealed weapon permit holder" with intent to mislead another to believe that person is authorized to wear or display such item; prohibits possession, manufacture, sale, importation, distribution, or use of signal jamming device. Effective Date: July 1, 2026

Current Committee of Reference: House Agriculture & Natural Resources Budget Subcommittee

---

SB 0434 **Assessment of Property Used for Residential Purposes** by Leek

Assessment of Property Used for Residential Purposes; Defining the term “changes or improvements made to improve the property’s resistance to wind damage”; prohibiting the consideration of the increase in just value of a property which is attributable to changes or improvements made to improve the property’s resistance to wind damage in determinations of the assessed value of certain property, etc. Effective Date: July 1, 2026

Current Committee of Reference: Senate Appropriations

SB 0450 **Ad Valorem Tax Exemption for Disabled Veterans** by Polsky

Ad Valorem Tax Exemption for Disabled Veterans; Removing a limitation on the value of a tax exemption that a surviving spouse could transfer to a new residence; revising when a specified tax exemption is considered to be granted, etc. Effective Date: July 1, 2026

Current Committee of Reference: Senate Finance and Tax

HB 0455 **Protection of Historic Monuments and Memorials** by Black

Protection of Historic Monuments and Memorials: Preempts all removal, damage to, or destruction of historic Florida monuments & memorials; provides that any existing or future ordinance, regulation, or rule to contrary, & certain actions by elected or appointed local government officials, are void; prohibits local governments from enacting or enforcing specified ordinances, regulations, or rules; provides penalties; requires DOS to withhold certain funding from local government; authorizes local government to temporarily remove & relocate monument or memorial in certain instances; authorizes Division of
Historical Resources of DOS to request certain recommendations from Florida Historical Commission & Department of Veterans' Affairs. Effective Date: upon becoming a law

Current Committee of Reference: House Government Operations Subcommittee

HB 0479 **Land and Water Management** by Maggard

Land and Water Management: Prohibits counties & municipalities from adopting laws, regulations, rules, policies, or ordinances that prohibit adjacent upland activities that are outside certain wetland buffers; repeals provisions relating to land management review teams. Effective Date: July 1, 2026

Current Committee of Reference: House Intergovernmental Affairs Subcommittee

SB 0488 **Department of Highway Safety and Motor Vehicles** by Massullo, Jr.

Department of Highway Safety and Motor Vehicles; Requiring licensure in lieu of registration of motor carriers operating certain qualified motor vehicles; revising due dates for motor fuel use tax returns submitted by licensed motor carriers; authorizing the department to inspect records necessary to verify the tax returns of motor carriers, motor fuel retail dealers, and motor fuel wholesale distributors; revising the apparent amount of property damage which requires the driver of a vehicle involved in a crash to notify law enforcement of the crash, etc. Effective Date: 7/1/2026

Current Committee of Reference: Senate Fiscal Policy

SB 0496 **Protection of Historic Monuments and Memorials** by McClain

Protection of Historic Monuments and Memorials; Citing this act as the “Historic Florida Monuments and Memorials Protection Act”; preempting all removal, damage to, or destruction of historic Florida monuments and memorials; providing that any existing or future ordinance, regulation, or rule to the contrary, and certain actions by elected or appointed local government officials, are void; providing civil penalties for certain officials who engage in certain actions; authorizing a local government to temporarily remove and relocate a monument or memorial in certain instances provided certain requirements are met, etc. Effective Date: Upon becoming a law

Current Committee of Reference: Senate Governmental Oversight and Accountability

SB 0504 **Code Inspector Body Cameras** by Burgess

Code Inspector Body Cameras; Requiring a governmental entity that permits its code inspectors to wear body cameras to establish certain policies and procedures; requiring such governmental entity to ensure that certain training occurs, to retain certain data in accordance with public records laws, and to perform a periodic review of actual body camera practices; providing that certain provisions relating to the interception of wire, electronic, and oral communications do not apply to body camera recordings made by code inspectors, etc. Effective Date: July 1, 2026

Current Committee of Reference: Senate Rules

SB 0506 **Public Records/Body Camera Recordings Recorded by a Code Inspector** by Burgess

Public Records/Body Camera Recordings Recorded by a Code Inspector; Providing an exemption from public records requirements for body camera recordings recorded by a code inspector under certain circumstances; providing exceptions; requiring a local government to retain body camera recordings for a specified timeframe; providing for

future legislative review and repeal of the exemption; providing a statement of public necessity, etc. Effective Date: On the same date that SB 504 or similar legislation takes effect, if such legislation is adopted in the same legislative session or an extension thereof and becomes a law

Current Committee of Reference: Senate Rules

SB 0508 **Landscape Irrigation** by Truenow

Landscape Irrigation; Creating the “Landscape Irrigation Standards and Watering Restrictions Act”; prohibiting a person from taking certain actions regarding a landscape irrigation system unless such person is a licensed irrigation contractor or the property owner; specifying that only a licensed irrigation contractor may connect an irrigation system to a water supply; providing a purpose for landscape irrigation system standards; creating a landscape irrigation watering schedule; providing for the enforcement of the act, etc. Effective Date: July 1, 2026

Current Committee of Reference: Senate Regulated Industries

HB 0509 **Code Inspector Body Cameras** by Partington

Code Inspector Body Cameras: Requires governmental entity that permits its code inspectors to wear body cameras to establish certain policies & procedures; requires such governmental entity to ensure that certain training occurs, to retain certain data in accordance with public records laws, & to perform periodic review of actual body camera practices; provides that certain provisions relating to interception of wire, electronic, & oral communications do not apply to body camera recordings made by code inspectors. Effective Date: July 1, 2026

Current Committee of Reference: House State Affairs Committee

HB 0511 **Pub. Rec./Code Inspector Body Cameras** by Partington

Pub. Rec./Code Inspector Body Cameras: Provides exemption from public records requirements for body camera recordings recorded by code inspector; requires local government to retain body camera recordings for specified timeframe; provides for future legislative review & repeal of exemption; provides statement of public necessity; directs Division of Library & Information Services of DOS to adopt specified retention requirement for certain body camera recordings by specified date. Effective Date: on the same date that HB 509 or similar legislation takes effect

Current Committee of Reference: House Government Operations Subcommittee

HB 0521 **Fines for Violations Detected by Traffic Infraction Detectors** by Yeager

Fines for Violations Detected by Traffic Infraction Detectors: Authorizes county or municipality to issue fine for certain violations detected through use of traffic infraction detector; requires fine to be accompanied by certain photograph or image. Effective Date: July 1, 2026

Current Committee of Reference: House Government Operations Subcommittee

HB 0535 **Candidate Qualifying** by Benarroch

Candidate Qualifying: Requires certain candidates to provide filing officer statement disclosing dual citizenship for nomination & election to federal, state, county, multicounty, district, or judicial office or to district school board. Effective Date: July 1, 2026

Current Committee of Reference: House State Affairs Committee

HB 0543 **Transportation** by McFarland

Transportation: Requires DOT to increase minimum perception-reaction time for all steady yellow signals at certain intersections by specified amount of time; requires certain seaports to submit annual report describing measures taken to support commercial space launch industry to Space Florida; prohibits certain seaports from converting planned or existing land, facilities, or infrastructure that supports cargo purposes unless specified conditions are met; requires legislative approval for use of state funds for specified projects; authorizes private entity to install automated license plate recognition system for use on certain property; authorizes county or municipality to set lower maximum speed

limit under certain conditions; authorizes vehicles displaying disabled parking permits to occupy more than one parking space under specified conditions; requires certain motor vehicles to be equipped with & maintain exhaust system to prevent excessive or unusual noise; authorizes certain golf carts to be titled & registered for operation on certain roads without inspection by DOT; provides that use of license plate frame or decorative border device is not prohibited under specified conditions; providing requirements for electronic credentialing system; authorizes DOT to make direct payments to certain subcontractors under specified conditions; provides requirements for takeover agreement; requires DOT to implement Next-generation Traffic Signal Modernization Grant Program. Effective Date: July 1, 2026

Current Committee of Reference: House Budget Committee

SB 0548 **Growth Management** by McClain

Growth Management; Providing requirements for coordination mechanisms that are required for certain agreements required as part of the intergovernmental coordination element of a comprehensive plan; requiring that certain interlocal agreements use a plan-based methodology for a certain purpose; requiring that certain capacity standards be specified in a certain impact fee study; requiring that a demonstrated-need study be accompanied by a certain declaration; prohibiting local governments, school districts, and special districts from using certain data for a specified purpose, etc. Effective Date:
7/1/2026

Current Committee of Reference: Senate Finance and Tax

SB 0550 **Prohibition on Levying Ad Valorem Taxes on Tangible Personal Property** by Bernard

Prohibition on Levying Ad Valorem Taxes on Tangible Personal Property; Proposing amendments to the State Constitution to prohibit levying ad valorem taxes on tangible personal property by counties, school districts, and municipalities and to provide an effective date, etc.

Current Committee of Reference: Senate Finance and Tax

SB 0552 **Prohibition on Levying Ad Valorem Taxes on Tangible Personal Property** by Bernard

Prohibition on Levying Ad Valorem Taxes on Tangible Personal Property; Conforming provisions to proposed amendments made to the State Constitution which prohibit levying ad valorem taxes on tangible personal property by counties, school districts, and municipalities; repealing a provision relating to the property appraiser’s assessments and effect of determinations by value adjustment boards; repealing a provision relating to extending the date for filing tangible personal property tax returns; repealing a provision relating to tax returns to show all exemptions and claims, etc. Effective Date: On the effective date of the amendment to the State Constitution proposed by SJR 550 or a similar joint resolution having substantially the same specified intent and purpose, if such amendment to the State Constitution is approved at the next general election or at an earlier special election specifically authorized by law for that purpose

Current Committee of Reference: Senate Finance and Tax

HB 0555 **Local Licensing of Home Caregivers** by Skidmore

Local Licensing of Home Caregivers: Authorizes counties & municipalities to license home caregivers within their jurisdictions. Effective Date: July 1, 2026

Current Committee of Reference: House Health Care Facilities & Systems Subcommittee

---

SB 0558 **Standards for Stormwater Systems** by Burgess

Standards for Stormwater Systems; Requiring stormwater systems owned by counties and municipalities, respectively, to comply with specified Department of Transportation standards; providing inspection requirements for such systems; specifying that certain local standards are superseded, etc.
Effective Date: 7/1/2026

Current Committee of Reference: Senate Community Affairs

HB 0575 **Auxiliary Containers** by Weinberger

Auxiliary Containers: Defines "auxiliary container" and "single-use"; removes obsolete provisions; preempting regulation of auxiliary containers to state; provides exceptions; requires DEP to develop uniform ordinance for use and disposition of single-use, nonrecyclable auxiliary containers; provides requirements for development of such ordinance; requires that sale or distribution of single-use plastic auxiliary containers on lands managed by Division of Recreation & Parks of DEP be eliminated to greatest extent possible; prohibits use, sale, or distribution of certain single-use auxiliary containers on such lands; requires department to develop and make available on its website statewide Marine Debris Reduction Plan; provides requirements for such plan; removes s. 500.90, F.S., relating to regulation of polystyrene products preempted to DACS. Effective Date: July 1, 2026

Current Committee of Reference: House Natural Resources & Disasters Subcommittee

---

SB 0576 **Local Government Cyber Security** by Harrell

Local Government Cyber Security; Creating the Local Government Cybersecurity Protection Program; requiring local governments to participate in the program and to apply to the Florida Digital Service to use cybersecurity programs and software; establishing priority for certain counties under the program; requiring the Florida Digital Service through the department to secure and administer federal funds, etc. Effective Date: July 1, 2026

Current Committee of Reference: Senate Governmental Oversight and Accountability

---

SB 0580 **Local Licensing of Home Caregivers** by Harrell

Local Licensing of Home Caregivers; Authorizing counties and municipalities to license home caregivers within their jurisdictions, etc. Effective Date: 7/1/2026

Current Committee of Reference: Senate Health Policy

SB 0588 **Local Government Enforcement Actions** by McClain

Local Government Enforcement Actions; Prohibiting certain enforcement actions by counties, municipalities, and special districts, respectively; defining the term “enforcement action”; requiring counties, municipalities, and special districts, respectively, to establish and maintain rules; authorizing filing of legal action and providing legal remedies in certain circumstances, etc. Effective Date: October 1, 2026

Current Committee of Reference: Senate Community Affairs

HB 0589 **Onsite Sewage Treatment and Disposal System Permits** by Nix, Jr.

Onsite Sewage Treatment and Disposal System Permits: Prohibits municipality or political subdivision of state from requiring owners & builders of certain residences to receive construction permits from DEP as condition of issuing building or plumbing permits; requires such owners & builders to provide certain proof to municipality or political subdivision. Effective Date: upon becoming a law

Current Committee of Reference: House State Affairs Committee

---

SB 0594 **Local Housing Assistance Plans** by Burton

Local Housing Assistance Plans; Authorizing counties and eligible municipalities to expend certain funds on lot rental assistance for mobile home owners for a specified time period; requiring each county and eligible municipality to include in its local housing assistance plan certain strategies; authorizing counties and eligible municipalities to provide certain funds to mobile home owners for rehabilitation and emergency repairs, etc. Effective Date: July 1, 2026

Current Committee of Reference: Senate Rules

SB 0602 **Watercraft Restrictions Based on Energy Source** by Bernard

Watercraft Restrictions Based on Energy Source; Providing an exception to the prohibition on state agencies, governmental authorities, and local governments restricting the use or sale of watercraft based on the energy source used to power the watercraft if such watercraft is used on certain bodies of water, etc. Effective Date: July 1, 2026

Current Committee of Reference: Senate Environment and Natural Resources

---

HB 0607 **Industries and Professional Activities** by Yarkosky

Industries and Professional Activities: Renames, removes, & redesignates specified boards, commissions, and councils established within DBPR; changes office locations of certain divisions; specifies that certain license application requirements apply only to certain professions; provides licensing authority to department rather than licensing boards; removes postlicensure education requirements for brokers, broker associates, and sales associates; removes continuing education requirements for licensure renewal as broker, broker associate, and sales associate; removes continuing education requirements for licensure renewal due to inactive status; revises provisions pertaining to board to transfer powers, duties, and responsibilities of board to DBPR; granting certain authority to department, rather than Florida Real Estate Appraisal Board; requires department to adopt rules; revises violations for which retail tobacco products dealers are penalized; revises retail nicotine product dealer administrative penalties; requires FDLE to accept and process certain fingerprints; specifies procedures for submitting and processing fingerprinting; requires department to conduct certain background checks. Effective Date: July 1, 2026

Current Committee of Reference: House Commerce Committee

SB 0610 **Residential Swimming Pool Requirements** by Smith

Residential Swimming Pool Requirements; Requiring that swimming pools located on residential real property that is transferred or sold on or after a specified date meet certain pool safety requirements; requiring that swimming pools located on residential real property that is transferred or sold on or after a specified date meet certain pool barrier requirements, etc. Effective Date: 7/1/2026

Current Committee of Reference: Senate Regulated Industries

HB 0611 **Landscape Irrigation** by Cobb

Landscape Irrigation: Prohibits certain actions regarding landscape irrigation systems unless such actions are taken by licensed irrigation contractors or property owners; authorizes local governments or water management districts to adopt certain requirements for property owners who install such systems; provides requirements for permits, plans, equipment & capacity, maintenance, & water schedules relating to such systems; provides fines & penalties; prohibits local governments from adopting or enforcing certain laws, rules, or regulations; authorizes DEP to adopt rules; revises membership of Construction Industry Licensing Board. Effective Date: July 1, 2026

Current Committee of Reference: House Natural Resources & Disasters Subcommittee

---

SB 0620 **Candidate Qualifying** by Mayfield

Candidate Qualifying; Requiring certain candidates to provide the filing officer a statement disclosing dual citizenship for nomination and election to federal, state, county, multicounty, district, or judicial office or to a district school board, etc. Effective Date: 7/1/2026

Current Committee of Reference: Senate Rules

HB 0629 **Regulation of Auxiliary Containers** by Esposito

Regulation of Auxiliary Containers: Preempts regulation of auxiliary containers to state; authorizes rules, regulations, & ordinances restricting use of glass auxiliary containers within boundaries of public beach or state park; authorizes Division of Recreation & Parks to regulate auxiliary containers within state parks. Effective Date: July 1, 2026

Current Committee of Reference: House Natural Resources & Disasters Subcommittee

---

HB 0635 **Cybersecurity Standards and Liability** by Giallombardo

Cybersecurity Standards and Liability: Prohibits local governments from imposing certain cybersecurity standards or processes on vendors; defines "vendor"; prohibits local governments from adopting or enforcing certain cybersecurity standards or processes; provides that local government, covered entity, or third-party agent that complies with certain requirements is not liable in connection with cybersecurity incident; requires covered entities & third-party agents to implement revised frameworks, standards, laws, or regulations. Effective Date: upon becoming a law

Current Committee of Reference: House Civil Justice & Claims Subcommittee

---

SB 0650 **Local Business Taxes** by Bernard

Local Business Taxes; Repealing provisions relating to local business taxes; authorizing certain counties to continue to impose a business tax; authorizing such counties to revise the definition of the term “merchant” in a specified manner; prohibiting such counties from revising a specified tax rate, etc.
Effective Date: July 1, 2026

Current Committee of Reference: Senate Community Affairs

SB 0654 **Traffic Infraction Enforcement** by DiCeglie

Traffic Infraction Enforcement; Revising the periods during which a county or municipality may enforce school zone speed limits, and the violations for which such enforcement is authorized, through the use of a speed detection system; prohibiting the use of a traffic infraction detector for remote surveillance; requiring district school board authorization and a public hearing process before a school district may place or install, or contract with a vendor to install, operate, and maintain, school bus infraction detection systems; revising the periods for which a county or municipality may authorize a traffic infraction enforcement officer to issue certain uniform traffic citations, etc. Effective Date: 10/1/2026

Current Committee of Reference: Senate Appropriations Committee on Transportation, Tourism, and Economic Development

---

HB 0675 **Affordable Housing** by Driskell

Affordable Housing: Revises upwards length of time that certain rental units must remain affordable in order to qualify for specified zoning variance; requires certain incentives be used for construction of affordable housing; revises upwards length of time that certain rental units must remain affordable in order to qualify for specified zoning variance; revises downward maximum median income used to determine eligibility for certain tax incentives; specifies that certain taxes do not apply to first-time homebuyers. Effective Date: July 1, 2026

Current Committee of Reference: House Housing, Agriculture & Tourism Subcommittee

---

SB 0692 **Cybersecurity Standards and Liability** by Leek

Cybersecurity Standards and Liability; Prohibiting local governments from imposing certain cybersecurity standards or processes on vendors; providing that a local government, a covered entity, or a third-party agent that complies with certain requirements is not liable in connection with a cybersecurity incident under certain circumstances; requiring covered entities and third-party agents to implement revised frameworks, standards, laws, or regulations within a specified timeframe in order to retain protection from liability, etc. Effective Date: Upon becoming a law

Current Committee of Reference: Senate Judiciary

SB 0698 **Onsite Sewage Treatment and Disposal System Permits** by Martin

Onsite Sewage Treatment and Disposal System Permits; Prohibiting a municipality or political subdivision of the state from requiring owners and builders of certain residences to receive construction permits from the Department of Environmental Protection as a condition of issuing building or plumbing permits; requiring such owners and builders to provide certain proof to the municipality or political subdivision, etc. Effective Date: Except as otherwise expressly provided in this act, this act shall take effect upon becoming a law

Current Committee of Reference: Senate Community Affairs

SB 0718 **Water Management** by McClain

Water Management; Prohibiting counties and municipalities from adopting laws, regulations, rules, or policies relating to water quality or quantity, pollution control, pollutant discharge prevention or removal, or wetlands; preempting such regulation to the state; repealing a provision relating to land management review teams, etc. Effective Date: 7/1/2026

Current Committee of Reference: Senate Environment and Natural Resources

---

SB 0750 **Alternative Plans Review and Building Inspection** by DiCeglie

Alternative Plans Review and Building Inspection; Deleting a provision authorizing a local government to charge an administrative fee when an owner or contractor retains a private provider for purposes of plans review or building inspection services, etc. Effective Date: 7/1/2026

Current Committee of Reference: Senate Community Affairs

SB 0752 **Taxation of First-time Buyers** by DiCeglie

Taxation of First-time Buyers; Specifying that documentary stamp taxes do not apply to deeds, transfers, or conveyances of residential property to first-time homebuyers; defining the term “first-time homebuyer”; specifying that documentary stamp taxes do not apply to certain documents executed by a first-time homebuyer in connection with the purchase of a principal residence, etc. Effective Date: 7/1 /2026

Current Committee of Reference: Senate Finance and Tax

SB 0756 **Affordable Housing** by Davis

Affordable Housing; Increasing the length of time that certain rental units must remain affordable in order to qualify for a specified zoning variance; requiring that certain incentives be used for the construction of affordable housing; decreasing the maximum median income used to determine eligibility for certain tax incentives; specifying that documentary stamp taxes do not apply to deeds, transfers, or conveyances of residential property to first-time homebuyers, etc. Effective Date: 7/1/2026

Current Committee of Reference: Senate Community Affairs

SB 0766 **Waste Management** by Martin

Waste Management; Deleting obsolete provisions that provide legislative findings and require the Department of Environmental Protection to review and update a specified report; preempting the regulation of auxiliary containers to the state; permitting rules, regulations, or ordinances restricting the use of glass auxiliary containers within the boundaries of a public beach; authorizing the Division of Recreation and Parks to regulate auxiliary containers within state parks; specifying that certain local ordinances and restrictions are permitted, etc. Effective Date: July 1, 2026

Current Committee of Reference: Senate Environment and Natural Resources

---

HB 0773 **Municipal Utilities** by Brackett

Municipal Utilities: Authorizes municipality to transfer portion of its public utility earnings to its general fund; requires that such percentages be established or reestablished by local referendum, subject to majority vote; provides exception to percentage restrictions in event of disaster or emergency; authorizes such percentages to be established by passage of resolution, by four-fifths vote; requires such percentages to be repaid to general fund within specified time period; prohibits municipality from transferring portion of its public utility earnings in certain instances; prohibits ability of municipality to receive certain state funds if such prohibited transfer is effected; requires specified disclosure in budget & financial report of municipality. Effective Date: July 1, 2026

Current Committee of Reference: House Economic Infrastructure Subcommittee

---

HB 0803 **Building Permits and Inspections** by Trabulsy

Building Permits and Inspection: Provides for expiration of certain building permits issued by county & local government; provides that under certain circumstances certain persons are not subject to discipline for performing job without applicable permits & inspections; prohibits local governments from requiring building permit for installation of certain walls or barriers; revises provisions relating to building code inspection services provided by private provider & private provider firms, including permit & administrative fees, responsibilities of private providers, permitting & inspection documents & reports, timeframes for issuing permits & notices, authority of local building official, notices of incomplete forms, authority of private providers acting as local building official, emergency inspection services, creation of uniform forms, audits, immunity, civil causes of action, posting of permits on specified websites, & adoption of specified registration system; requires Florida Building Commission to develop uniform commercial & residential building permit applications; prohibits association or certain committees from requiring building permit as prerequisite for certain review. Effective Date: July 1, 2026

Current Committee of Reference: House Intergovernmental Affairs Subcommittee

SB 0840 **Land Use Regulations for Local Governments Affected by Natural Disasters** by DiCeglie

Land Use Regulations for Local Governments Affected by Natural Disasters; Prohibiting impacted local governments from enforcing certain moratoriums, requiring the repair or reconstruction of certain improvements to meet certain requirements, or enforcing changes to specified procedures; revising circumstances under which impacted local governments may enforce certain amendments, site plans, development permits, or development orders; deleting provisions related to filing suit against an impacted local government for injunctive relief, etc. Effective Date: 7/1/2026

Current Committee of Reference: Senate Rules

SB 0852 **Food Insecure Areas** by Jones

Food Insecure Areas; Authorizing a local government to enact land development regulations to permit land use for a small-footprint grocery store located in a food insecure area; authorizing a local government to include in its comprehensive plan a provision permitting land use for a small-footprint grocery store located in a food insecure area, etc. Effective Date: July 1, 2026

Current Committee of Reference: Senate Community Affairs

HB 0853 **Mobile Home Park Regulations** by Long

Mobile Home Park Regulations: Authorizes counties & municipalities to adopt & enforce local laws, codes, or ordinances relating to mobile home park lot tenancies; authorizes code enforcement officer to cite certain violations to mobile home park owner or mobile home owner; revises obligations & responsibilities of mobile home park owner; revises obligations & responsibilities of mobile home owner; removes provision that mobile home owner is responsible for certain fines; authorizes unit of local government to adopt & enforce local laws, ordinances, or codes for specified purpose; authorizes unit of local government to adopt & enforce local laws, ordinances, or codes for specified purpose; authorizes unit of local government to bring civil proceeding against mobile home park owner or mobile home lot. Effective Date: July 1, 2026

Current Committee of Reference: House Housing, Agriculture & Tourism Subcommittee

HB 0865 **Local Regulation of Drinking Straws and Stirrers** by Blanco

Local Regulation of Drinking Straws and Stirrers: Prohibits local governmental entities from enacting any rule, regulation, or ordinance for drinking straws or stirrers which does not meet specified requirements; provides requirements for local governmental entities that elect to enact rules, regulations, or ordinances for drinking straws or stirrers. Effective Date: upon becoming a law

Current Committee of Reference: House Natural Resources & Disasters Subcommittee

HB 0903 **Assessed Value of Nonhomestead Property** by Grow

Assessed Value of Nonhomestead Property: Proposes State Constitutional amendment reducing maximum percentage assessed value of nonhomestead properties may increase annually.

Current Committee of Reference: House Ways & Means Committee

SB 0910 **Parking on Public Property** by Mayfield

Parking on Public Property; Defining the terms “public property” and “publicly owned buildings or facilities”; requiring local governments to refund owners of vehicles who pay fees to park on specified public property in certain circumstances; prohibiting certain vehicles from being towed or issued a traffic citation for a specified time period after being parked on specified public property; prohibiting local governments from allowing private business entities or enterprises to use specified public property for private parking purposes for a fee; providing construction, etc. Effective Date: July 1, 2026

Current Committee of Reference: Senate Transportation

HB 0927 **Local Land Planning and Development** by Sapp

Local Land Planning and Development: Requires land development regulation commission to develop model ordinance to guide local governments in enactment of land planning & development program ordinance; requires local governments by date certain to enact land planning & development program ordinance under which local governments may enter into employment agreements with certain private providers to perform specified review services; establishes contract terms & conditions of employment agreements for review services under program ordinance; authorizes civil causes of action for specified relief; requires governing body of county or legal governing body of county, municipality, town, or village to create program, or to update existing program, to expedite process for issuing building permits for residential subdivisions, planned unit developments, or planned communities, or one or more phases of multi-phased community or subdivision, by date certain; authorizes applicant to use specified private provider for land use approvals to expedite application process for any plans necessary to support approval of site plan, preliminary plat, & final plat, or building permits after preliminary plat is approved.
Effective Date: July 1, 2026

Current Committee of Reference: House Intergovernmental Affairs Subcommittee

---

SB 0940 **Municipal Water and Sewer Utility Rates, Fees, and Charges** by McClain

Municipal Water and Sewer Utility Rates, Fees, and Charges; Deleting a limitation on the amount of rates, fees, and charges municipal water and sewer utilities are authorized to impose on consumers for such services outside the boundaries of the municipality; providing for the continuance and phase out of certain bond covenant surcharges; requiring municipalities operating such utilities to submit a specified rate study every 7 years to the Department of Environmental Protection which evaluates certain information, etc. Effective Date: 7/1/2026

Current Committee of Reference: Senate Regulated Industries

SB 0948 **Local Government Land Development Regulations and Orders** by McClain

Local Government Land Development Regulations and Orders; Requiring counties and municipalities, respectively, to follow certain application procedures for applications for certain development permits and development orders; creating the “Florida Starter Homes Act” for a specified purpose; prohibiting local governments from imposing regulations governing residential lots unless such regulations meet specified requirements; prohibiting local governments from imposing certain regulations if a residential lot is connected to a public water system and a sewerage system; requiring the permitting as of right of an off-site constructed residential dwelling in certain zoning districts, etc. Effective Date: 7/1/2026

Current Committee of Reference: Senate Judiciary

HB 0957 **Deferred and Unpaid Taxes** by Long

Deferred and Unpaid Taxes: Limits specified tax deferral to properties with just value of $1 million or less; increases minimum value of tax certificate that may be sold at public auction or by electronic sale.

Effective Date: July 1, 2026

Current Committee of Reference: House Ways & Means Committee

SB 0958 **Local Regulation of Drinking Straws and Stirrers** by Bradley

Local Regulation of Drinking Straws and Stirrers; Prohibiting local governmental entities from enacting any rule, regulation, or ordinance for drinking straws or stirrers which does not meet specified requirements; providing requirements for local governmental entities that elect to enact rules, regulations, or ordinances for drinking straws or stirrers, etc. Effective Date: Upon becoming a law

Current Committee of Reference: Senate Community Affairs

HB 0967 **Electronic Payments Made to Units of Local Governments** by Buchanan

Electronic Payments Made to Units of Local Governments: Revises legislative intent; requires units of local government to accept certain forms of payments; requires such local governments accept payments online. Effective Date: July 1, 2026

Current Committee of Reference: No Current Committee

SB 0968 **Home Backup Power Systems** by McClain

Home Backup Power Systems; Prohibiting a local government from adopting a technical amendment to the Florida Building Code which requires a permit or any functionally equivalent local review or approval for certain backup power systems; prohibiting a local government that issues building permits from requiring an owner of a single-family dwelling or such owner's contractor to obtain a building permit to perform work on the single-family lot valued at less than a specified sum; prohibiting a local enforcement agency from requiring a permit or any functionally equivalent local review or approval for the installation, relocation, replacement, or repair of an eligible residential backup power system; defining the term "backup power system", etc. Effective Date: July 1, 2026

Current Committee of Reference: Senate Community Affairs

HB 0979 **Infill Redevelopment** by Borrero

Infill Redevelopment: Requires local government to permit development of certain qualifying parcels up to certain density & intensity; requires local government to permit development of qualifying parcel with single-family homes or townhouses; prohibits local government from imposing certain restrictions or requirements on development of certain qualifying parcels; prohibits local government from using subdivision process to restrict development; requires developers of qualifying parcels to establish that certain recreational facilities & areas reserved for recreational use have not been in operation or use for certain timeframe, to pay double parks & recreational facilities impact fees for certain purpose, & to provide certain written notice to certain property owners; requires property owners who receive such written notice to exercise option to purchase certain parcels or portions thereof within specified timeframe or forfeit option. Effective Date: upon becoming a law

Current Committee of Reference: House Intergovernmental Affairs Subcommittee

---

SB 0998 **Department of Commerce** by Yarborough

Department of Commerce; Repealing provisions relating to the Florida Small Cities Community Development Block Grant Program Act; providing an exemption for certain conveyances of state lands to certain federal agencies which revert to the Board of Trustees of the Internal Improvement Trust Fund if such land is not used for its intended purposes as a military installation buffer or if the military installation closes; requiring employers who are required to use the E-Verify system to verify a new employee's employment eligibility to maintain an E-Verify case result for each employee which shows that the employee is authorized to work; requiring the department to provide an employer knowingly employing an unauthorized alien with a written determination, etc. Effective Date: July 1, 2026

Current Committee of Reference: Senate Appropriations Committee on Transportation, Tourism, and Economic Development

---

HB 1001 **Official Actions of Local Governments** by Black

Official Actions of Local Governments: Prohibits counties & municipalities, respectively, from funding or promoting or taking official action as it relates to diversity, equity, & inclusion; prohibits counties & municipalities from expending funds for diversity, equity, & inclusion offices or for diversity, equity, & inclusion officers; provides that county commissioner, member of governing body of municipality, or any other county or municipal official acting in official capacity who violates certain provisions commits misfeasance or malfeasance in office; authorizes cause of action against counties & municipalities; authorizes court to enter judgment awarding certain relief, damages, & costs; requires potential recipients of county or municipal contracts or grants to make certain certification to county or municipality before being awarded such contract or grant. Effective Date: January 1, 2027

Current Committee of Reference: House Intergovernmental Affairs Subcommittee

---

HB 1007 **Hyperscale Data Centers** by Griffitts Jr.

Hyperscale Data Centers: Provides that hyperscale data centers are prohibited use on or after date certain for specified land use categories in local in comprehensive plans & agricultural zoning districts within unincorporated areas; prohibits utilities, in fixing rates for hyperscale data centers, from collecting certain impact fees; requires permit applications for consumptive use of water relating to hyperscale data centers to contain specified disclosure; prohibits construction & operation of hyperscale data centers on specified lands & water on or after date certain; provides for hearing requirement before construction & operation of hyperscale data centers; requires governing body of local government that approves construction & operation of hyperscale data center to request, in concurrence with specified board, approval; provides for concurrence hearing requirements; prohibits construction of hyperscale data center if board does not approve concurrence request at such hearing. Effective Date: July 1, 2026

Current Committee of Reference: House State Affairs Committee

---

SB 1014 **Provision of Municipal Utility Service to Owners Outside the Municipal Limits** by Mayfield

Provision of Municipal Utility Service to Owners Outside the Municipal Limits; Prohibiting a municipal utility from declining to extend service to properties outside its corporate limits under certain circumstances; requiring a municipal utility to expand its service to an owner who makes such a request under certain circumstances; requiring the municipal utility to make a determination within a specified timeframe and provide such determination to the owner in writing; requiring the municipal utility to provide the owner with specified information and to connect properties in a timely manner, etc. Effective Date: 7/1/2026

Current Committee of Reference: Senate Regulated Industries

SB 1018 **Deferred Compensation Plans for Public Employees** by Truenow

Deferred Compensation Plans for Public Employees; Citing this act as the "Deferred Compensation Automatic Enrollment Act'; authorizing the inclusion of an automatic enrollment arrangement in a government employee's deferred compensation plan; requiring that the automatic enrollment arrangement provide employees the ability to make certain elections regarding contributions; requiring that the plan provide for a default investment into which contributions must be placed under a specified circumstance; authorizing counties, municipalities, political subdivisions, and constitutional county officers to adopt automatic enrollment arrangements for specified deferred compensation programs, etc.
Effective Date: 7/1/2026

Current Committee of Reference: Senate Governmental Oversight and Accountability

---

HB 1049 **Building Permit Requirements** by Esposito

Building Permit Requirements: Provides that certain residential manufactured buildings may not be denied building permit for placement of such building; prohibits local government from adopting certain technical amendments to FBC; prohibits local enforcement agency from requiring building permit for work valued at specified amount; prohibits project from being divided into multiple projects; requires building permit for certain work regardless of value of work; requires contractor to maintain certain written records; prohibits local enforcement agency from requiring building permit for specified work on backup power system installed by certain persons or entities; requires local enforcement agencies to

establish specified process to submit certain notice before installation of backup power system; prohibits local governments from adopting or enforcing certain ordinances, rules, or other measures; authorizes local enforcement agency to conduct one inspection, either in person or virtually; authorizes use of private provider for certain inspections; requires local enforcement agency to provide certain persons written notice of correction; authorizes stop-work order under specific circumstances; requires local enforcement agency to offer reinspection date within certain time period; provides that private provider inspection report constitutes acceptance; prohibits local enforcement agency from withholding or revoking certificate of occupancy based solely on failed inspection report. Effective Date: July 1, 2026

Current Committee of Reference: House Industries & Professional Activities Subcommittee

---

HB 1085 **Local Government Cyber Security** by Miller

Local Government Cyber Security: Creates Local Government Cybersecurity Protection Program within Florida State University, to be administered by Florida State University; requires Florida State University to enter into certain data-sharing agreements with local governments & Florida Digital Service for specified purpose; requires Florida State University to administer grant program based on specified criteria to provide information technology commodities & services to local governments for specified purpose; requires Florida State University to contract for information technology commodities & services & award such commodities & services to local governments; requires grants to be annually awarded by date certain; authorizes Florida State University to apply for & accept certain funds or grants. Effective Date: July 1, 2026

Current Committee of Reference: House Information Technology Budget & Policy Subcommittee

---

HB 1089 **Waste Facilities** by Bartleman

Waste Facilities: Prohibits local government from issuing construction permit for certain solid waste disposal & waste-to-energy facilities under certain circumstances. Effective Date: July 1, 2026

Current Committee of Reference: House Natural Resources & Disasters Subcommittee

---

HB 1125 **Local Government Salaries and Benefits** by Giallombardo

Local Government Salaries and Benefits: Revises requirements for board of county commissioners salary formula to apply to noncharter counties; provides for determination of salaries of members of boards of county commissioners of certain counties; requires referendum for board of county commissioners to increase salary, retirement benefits, or other compensation paid to its members; requires referendum election costs to be paid by county; requires referendum for governing body of municipality to increase salary, retirement benefits, or other compensation paid to its members; requires referendum election costs to be paid by municipality; requires referendum for governing body of special district to increase salary, retirement benefits, or other compensation paid to its members; requires referendum election costs to be paid by special district. Effective Date: October 1, 2026

Current Committee of Reference: House Intergovernmental Affairs Subcommittee

---

SB 1134 **Official Actions of Local Governments** by Yarborough

Official Actions of Local Governments; Prohibiting counties and municipalities, respectively, from

funding or promoting or taking official action as it relates to diversity, equity, and inclusion; providing that certain ordinances, resolutions, rules, regulations, programs, and policies are void; providing that a county commissioner, a member of the governing body of a municipality, or any other county or municipal official acting in an official capacity who violates certain provisions commits misfeasance or malfeasance in office, etc. Effective Date: January 1, 2027

Current Committee of Reference: Senate Community Affairs

SB 1138 **Qualified Contractors** by Massullo, Jr.

Qualified Contractors; Requiring the governing body of a local government, by a specified date, to create a program that authorizes an applicant to use a qualified contractor to conduct preapplication review of an application; requiring the development services office of a local government to establish a registry of a specified number of qualified

contractors to be used to conduct preapplication reviews; prohibiting a local government from enforcing any additional criteria for qualified contractors beyond what is authorized by the act; prohibiting local governments from creating or establishing additional regulations for the approval of a final plat, etc. Effective Date: 7/1/2026

Current Committee of Reference: Senate Judiciary

HB 1139 **Impact Fees** by Gentry

Impact Fees: Provides requirements for coordination mechanisms that are required for certain agreements required as part of intergovernmental coordination element of comprehensive plan; requires that certain interlocal agreements use plan-based methodology; requires that demonstrated-need study use plan-based methodology; requires that certain capacity standards be specified in certain impact fee study; prohibits local governments, school districts, & special districts from including certain deductions in certain impact fee increases & from increasing impact fee rates beyond certain phase-in limitations by more than specified percentage; provides that prevailing petitioner is entitled to impact fee overpayment refund, with interest. Effective Date: July 1, 2026

Current Committee of Reference: House Housing, Agriculture & Tourism Subcommittee

---

HB 1143 **Local Government Land Development Regulations and Orders** by Nix, Jr.

Local Government Land Development Regulations and Orders: Revises, for counties & municipalities, respectively, application procedures for development permits & orders; prohibits local governments from adopting land development regulations governing lots on residential real property unless such adoption meets specified requirements; prohibits local governments from adopting certain land development regulations if lot on residential real property is connected to public water system or public sewer system; requires that land development regulations adopted by local government allow lots to front or abut shared space instead of public right-of-way; establishes cause of action; authorizes award of specified remedies; provides for waiver of sovereign immunity. Effective Date: July 1, 2026

Current Committee of Reference: House Intergovernmental Affairs Subcommittee

---

HB 1151 **Health Care Autonomy** by Driskell

Health Care Autonomy: Establishes fundamental right to reproductive health care; provides that every individual has fundamental right to make autonomous decisions about individual's own reproductive health; provides that individuals who become pregnant have fundamental right to make certain decisions in exercise of such right; prohibits state from denying or interfering with individual's right to access reproductive health care; prohibits state & local law enforcement agencies & officials from harassing or discriminating against individual for providing or obtaining reproductive health care or assisting another person in doing so; prohibits such state & local entities from penalizing, prosecuting, or otherwise taking adverse action against individual for exercising specified rights, or against individual for assisting another in exercising such rights; provides individuals with immunity from civil liability for exercising specified rights or aiding or assisting another in exercising such rights; provides that fertilized egg, embryo, or fetus does not have independent rights under laws of this state; prohibits local units of government from regulating individual's ability to exercise right to reproductive health care in manner more restrictive than that set forth in specified provisions. Effective Date: effect upon becoming a law

Current Committee of Reference: House Health Professions & Programs Subcommittee

---

HB 1169 **Enforcement of the Florida Building Code** by Tramont

Enforcement of the Florida Building Code: Provides that local government is not eligible for additional state funds if it has been subject to legislative committee's audit within specified timeframe or if it fails to submit affirmation to legislative delegation; requires each legislative committee to report such local governments to presiding officers & appropriations chairs. Effective Date: July 1, 2026

Current Committee of Reference: House Intergovernmental Affairs Subcommittee

---

HB 1183 **Transportation Infrastructure Land Development Regulations** by Cross

Transportation Infrastructure Land Development Regulations: Requires governing body of county or municipality to adopt ordinance, & governing body of special district to adopt resolution, establishing specified transit-oriented development (TOD) zones & rural livable urban village (LUV) areas; requires local government to zone for mixed use, & authorize certain commercial uses for, lots within TOD zones
& rural LUV areas; prohibits local government from imposing certain building regulations in specified TOD zones & rural LUV areas; prohibits reduction or elimination of TOD zones after establishment; prohibits local government from imposing certain regulations for lots that contain historic property; provides private cause of action; authorizes award of specified relief; provides that prevailing plaintiff is entitled to attorney fees & costs; provides waiver of sovereign immunity. Effective Date: July 1, 2026

Current Committee of Reference: House Intergovernmental Affairs Subcommittee

---

SB 1196 **Waste Facilities** by Sharief

Waste Facilities; Prohibiting a local government or the Department of Environmental Protection, respectively, from issuing a construction permit for certain solid waste disposal and waste-to-energy facilities under certain circumstances, etc. Effective Date: 7/1/2026

Current Committee of Reference: Senate Environment and Natural Resources

---

HB 1217 **Prohibited Governmental Policies Regulating Greenhouse Gas Emissions** by Snyder

Prohibited Governmental Policies Regulating Greenhouse Gas Emissions: Prohibits governmental entities from adopting certain net zero policies; prohibits governmental entities from using government funds in any manner that supports, implements, or advances certain net zero policies; prohibits governmental entities from imposing tax, fee, penalty, charge, offset, or assessment to advance certain net zero policies; requires each governmental entity to annually submit to Department of Revenue certain affidavit; prohibits governmental entities from implementing, administering, or enforcing certain programs. Effective Date: July 1, 2026

Current Committee of Reference: House Economic Infrastructure Subcommittee

---

SB 1220 **Transportation** by Massullo, Jr.

Transportation; Providing requirements for an infrastructure development and improvement component included in a port's strategic plan; requiring the Department of Transportation to coordinate with the Department of Commerce, specified ports, and the Federal Government for a certain purpose; revising duties of the Department of Transportation relating to airport systems in this state; providing that the department serves as the primary point of contact for statewide topographic aerial LiDAR procurement and certain cost sharing, etc. Effective Date: July 1, 2026

Current Committee of Reference: Senate Transportation

HB 1227 **Preemption to the State** by Oliver

Preemption to the State: Prohibits counties, municipalities, & special districts, respectively, from substantially burdening free exercise of religion by adopting or enforcing certain ordinances, regulations, resolutions, rules, or other policies; prohibits local enforcement agency from denying issuance of certificate of occupancy to owner of residential or commercial property based on noncompliance with Florida-friendly landscaping ordinances; prohibits local enforcement agency from denying issuance of building permit for alteration, modification, or repair of single-family residential structure; prohibits local enforcement agency from requiring building permit for construction of playground equipment or fence on certain property; prohibits local governments from adopting or enforcing certain ordinances, regulations, resolutions, rules, charter provisions, or other policies or from taking any action to license or otherwise regulate mutual benefit corporations; revises criteria for business to be considered home-based business as it relates to local government regulation of parking.
Effective Date: upon becoming a law

Current Committee of Reference: House Intergovernmental Affairs Subcommittee

---

SB 1234 **Building Permits and Inspections** by DiCeglie

Building Permits and Inspections; Providing for expiration of certain building permits issued by a county; requiring the Florida Building Commission to modify the Florida Building Code to exempt from building permit requirements the installation of certain walls or barriers; providing for expiration of certain building permits issued by a local government; revising definitions and defining terms; requiring certain services to be subject to an agreement, rather than a written contract, etc. Effective Date: July 1, 2026

Current Committee of Reference: Senate Regulated Industries

HB 1251 **Expenditure of Public Funds by Local Governments** by Shoaf

Expenditure of Public Funds by Local Governments: Prohibits local governments from expending public funds for specified purposes; prohibits acceptance of public funds from local governments for lobbying; authorizes filing of complaints with Commission on Ethics alleging violations; requires commission to investigate & provide report of its findings to certain entities; requires commission to adopt rules.
Effective Date: July 1, 2026

Current Committee of Reference: House Intergovernmental Affairs Subcommittee

---

HB 1275 **Prohibition on Levying Ad Valorem Taxes on Tangible Personal Property** by LaMarca

Prohibition on Levying Ad Valorem Taxes on Tangible Personal Property: Proposes amendment to State Constitution to prohibit levying of ad valorem taxes on tangible personal property by certain entities.

Current Committee of Reference: House Ways & Means Committee

HB 1277 **Prohibition on Levying Ad Valorem Taxes on Tangible Personal Property** by LaMarca

Prohibition on Levying Ad Valorem Taxes on Tangible Personal Property: Conforms provisions to proposed amendments made to State Constitution which prohibit levying ad valorem taxes on tangible personal property by counties, school districts, & municipalities; removes provisions relating to property appraiser's assessments & effect of determinations by value adjustment boards; repeals provisions relating to extending date for filing tangible personal property tax returns; repeals provisions relating to erroneous returns & estimates of assessment when no return is filed; repeals provisions relating to tax returns to show all exemptions & claims; repeals provisions relating to exemption of renewable energy source devices; repeals provisions relating to exemption for tangible personal property; repeals provisions relating to uncollectible personal property taxes & correction of tax roll; repeals provisions relating to attachment of tangible personal property in case of removal; provides transitional provision. Effective Date: on the effective date of the amendment to the State Constitution proposed by HJR 1275 or a similar joint resolution having substantially the same specified intent and purpose

Current Committee of Reference: House Ways & Means Committee

HB 1303 **Department of Financial Services** by Miller

Department of Financial Services: Establishes Florida Agency for Fiscal Oversight within DFS; provides purpose & duties of agency; requires agency to conduct audit of certain local governments; authorizes agency to request certain information; provides penalties for noncompliance with such request; removes requirement that specified hotline be operated for certain amount of time each day; removes requirement that hotline be advertised in specified manner; requires specified employees to take certain training annually; requires first training be completed by specified deadline; requires certain employees who report information to Florida Agency for Fiscal Accountability be afforded same protection as whistle-blowers; prohibits local governments from executing certain documents with specified provisions; provides that such contracts are void; requires local governments submit certain report to DFS; requires counties to use certain contract tracking system. Effective Date: July 1, 2026

Current Committee of Reference: House Insurance & Banking Subcommittee

---

HB 1307 **Unauthorized Aliens** by Jacques

Unauthorized Aliens: Prohibits unauthorized aliens from receiving certain licensing or certification, financial assistance, & claim reimbursement; requires certain procedures, instruction, & testing to be conducted in English; prohibits

alternate language accommodations; requires employers & licensees to verify employment eligibility & citizenship status, respectively, before taking certain actions; provides civil cause of action; provides penalties; authorizes certain complains; requires Office of Financial Regulation to conduct random audits; creates rebuttable presumption against unauthorized out-of-state drivers; provides exemptions & standard of proof; provides requirements for law enforcement officers, DHSMV, insurers, & OIR; provides administrative penalties; authorizes private cause of action; prohibits certain financial institutions from accepting certain forms of personal identification. Effective Date: upon becoming a law

Current Committee of Reference: House Commerce Committee

HB 1329 **Local Government Spending** by Benarroch

Local Government Spending: Requires posting of county & municipality budgets to allow members of public to download & review certain information & data in specified formats; requires certain officers to perform a specified exercise before final adoption of budget; prohibits local governments from expending public funds for purpose of diversity, equity, & inclusion; prohibits local governments from contracting with private vendors for services for promoting, advocating for, or providing training or education on diversity, equity, & inclusion; requires all local governments make specified certification to CFO by date certain each year; requires CFO to conduct specified evaluation; specifies that local governments that violate certain provisions are subject to administrative fines; requires such fines to be deposited in Insurance Regulatory Trust Fund. Effective Date: July 1, 2026

Current Committee of Reference: House Intergovernmental Affairs Subcommittee

---

SB 1342 **Transportation Infrastructure Land Development Regulations** by Rouson

Transportation Infrastructure Land Development Regulations; Citing this act as the “Transit-Oriented Development Act” or the “TOD Act”; requiring the governing body of a county or municipality to adopt an ordinance, and the governing body of a special district to adopt a resolution, establishing specified transit-oriented development (TOD) zones and rural livable urban village (LUV) areas by a certain date; prohibiting a local government from imposing certain building regulations in specified TOD zones and rural LUV areas; prohibiting the reduction or elimination of TOD zones after establishment; prohibiting a local government from imposing certain regulations for lots that contain historic property; providing a waiver of sovereign immunity, etc. Effective Date: 7/1/2026

Current Committee of Reference: Senate Community Affairs

SB 1366 **Claims Against the Government** by Brodeur

Claims Against the Government; Increasing the statutory limits on the liability of the state and its agencies and subdivisions for tort claims; requiring the Department of Financial Services, beginning on a specified date and every 5 years thereafter, to adjust the limitations of liability for claims; limiting attorney fees based on the amount of funds recovered; authorizing the Legislature to limit attorney fee awards in a claim bill or reserve any portion of the proceeds of a claim bill to the claimant, etc. Effective Date: 10/1/2026

Current Committee of Reference: Senate Judiciary

SB 1380 **Unauthorized Aliens** by Martin

Unauthorized Aliens; Prohibiting the Department of Financial Services from issuing a license or certification to unauthorized aliens; authorizing a county to require a borrower to provide proof of being lawfully present in the United States; authorizing the Division of Risk Management to approve or deny claims relating to a minor who is an unauthorized alien; requiring that certain procedures, instruction, and testing be conducted in English; prohibiting certain entities and corporations from providing down payment assistance to unauthorized aliens, etc. Effective Date: Upon becoming a law

Current Committee of Reference: Senate Banking and Insurance

HB 1389 **Affordable Housing** by Redondo

Affordable Housing: Requires counties & municipalities, respectively, to authorize multifamily & mixeduse residential as allowable uses for specified parcels of land if certain conditions are met; requires counties & municipalities, respectively, to eliminate parking requirements for proposed development; authorizes board of county commissioners or governing body of municipality to exempt specified portions of property within multifamily projects & accessory dwelling units that are used to provide affordable housing. Effective Date: July 1, 2026

Current Committee of Reference: House Housing, Agriculture & Tourism Subcommittee

---

HB 1395 **Artificial Intelligence** by Rizo

Artificial Intelligence: Prohibits governmental entities from extending or renewing contract with specified entities; prohibits governmental entities from taking certain actions relating to contracting for AI technology, software, or products unless certain requirements are met; prohibits governmental entities from entering into contracts for AI technology, software, or products under certain conditions; provides rights of Floridians relating to AI use; requires consent for minors to create new or maintain existing companion chatbot platforms; requires companion chatbot platforms to make certain disclosures & institute certain measures to protect minors; prohibits AI technology companies from selling or disclosing personal information of users unless information is deidentified; prohibits commercial use of individual's name, image, or likeness created through AI without consent; provides for enforcement; provides for civil penalties & damages; provides for private causes of action. Effective Date: July 1, 2026

Current Committee of Reference: House Information Technology Budget & Policy Subcommittee

---

HB 1403 **Deferred Compensation Plans for Public Employees** by Salzman

Deferred Compensation Plans for Public Employees: Authorizes inclusion of automatic enrollment arrangement in government employee's deferred compensation plan; requires that automatic enrollment arrangement be established with default contribution rate; authorizes periodic reenrollment of specified government employees; authorizes periodic resetting of contribution rates for specified government employees; requires that automatic enrollment arrangement provide employees ability to make certain elections regarding contributions; requires that plan provide for default investment into which contributions must be placed under specified circumstance; authorizes counties, municipalities, political subdivisions, & constitutional county officers to adopt automatic enrollment arrangements for specified deferred compensation programs; provides that deferred compensation plan of state may adopt automatic enrollment arrangement only upon approval of Legislature; requires that certain deduction of wages or salary of employees be treated in specified manner. Effective Date: July 1, 2026

Current Committee of Reference: House Government Operations Subcommittee

---

HB 1409 **THC** by Berfield

THC: Provides that marijuana testing laboratory may acquire hemp & hemp extract only from certain businesses; prohibits marijuana testing laboratory from selling, distributing, or transferring hemp or hemp extract from certain businesses; requires marijuana testing laboratory to separate marijuana received from certain entities from hemp or hemp extract received from certain entities; revises requirements for sale & distribution of hemp extract; prohibits businesses or food establishments from possessing hemp or hemp extract products that are attractive to children; prohibits unpermitted business sales, street sales, or festival sales of hemp extract; prohibits business permitted to sell hemp or hemp extract from being located in certain areas; provides requirements for businesses permitted to sell hemp or hemp extract; including THC-infused beverages in list of products prohibited for sale to person under 21 years of age; provides penalty for hemp extract possessed, manufactured, delivered, held, offered for sale, distributed, or sold by certain entities in violation of specified provisions. Effective Date: July 1, 2026

Current Committee of Reference: House Industries & Professional Activities Subcommittee

---

HB 1417 **Department of Environmental Protection** by LaMarca

Department of Environmental Protection: Repeals, revises, & creates various provisions relating to Environmental Regulation Commission; Acquisition & Restoration Council; central sewer system connections; wastewater treatment systems; aerobic treatment units; basin management action plans; type 2 transfer of Florida Communities Trust from DEP to Acquisition & Restoration Council; onsite sewage treatment & disposal system reports & permits; air pollution

permits & license fees; small community sewer construction grants; wastewater services; & fertilizer inspection fees.
Effective Date:
July 1, 2026

Current Committee of Reference: House Natural Resources & Disasters Subcommittee

SB 1420 **Local Utility Revenues** by DiCeglie

Local Utility Revenues; Prohibiting counties and municipalities, respectively, from transferring for specified purposes revenues collected from providing utility services; requiring revenue surpluses to be returned to the ratepayers; requiring county and municipal utilities, respectively, to develop budget forecasts and strategies that meet certain requirements; prohibiting counties and municipalities, respectively, from charging a higher rate or adding a surcharge to certain customers, etc. Effective Date: 7/1/2026

Current Committee of Reference: Senate Regulated Industries

SB 1434 **Infill Redevelopment** by Calatayud

Infill Redevelopment; Creating the “Infill Redevelopment Act”; requiring a local government to permit the development of certain qualifying parcels up to a certain density and intensity; prohibiting a local government from imposing certain restrictions or requirements on the development of certain qualifying parcels; requiring developers of qualifying parcels to maintain a specified buffer between new developments and single-family homes and townhouses under certain circumstances; prohibiting a local government from adopting or enforcing certain local laws, ordinances, or regulations, etc. Effective Date: Upon becoming a law

Current Committee of Reference: Senate Judiciary

SB 1444 **Preemption to the State** by Martin

Preemption to the State; Providing for preemption of all matters relating to the regulation of religious services and gatherings; prohibiting counties, municipalities, and special districts, respectively, from substantially burdening the free exercise of religion by adopting or enforcing certain ordinances, regulations, resolutions, rules, or other policies; prohibiting a local enforcement agency from denying the issuance of a certificate of occupancy to an owner of residential or commercial structure based on noncompliance with Florida-friendly landscaping ordinances in certain circumstances; waiving sovereign immunity in accordance with specified laws, etc. Effective Date: Upon becoming a law

Current Committee of Reference: Senate Judiciary

HB 1451 **Utility Services** by Busatta

Utility Services: Requires certain public meetings as condition precedent to effectiveness of new or extended agreement under which municipality will provide specified utility services in other municipalities or unincorporated areas; limits portion of certain utility revenues that municipality may use to fund or finance general government functions; requires excess revenues to be reinvested into municipal utility or returned to customers; requires municipalities that provide specified utility services to report certain information by specified date, & annually thereafter, to PSC; requires PSC to compile such information & submit report by specified date, & annually thereafter, to Governor & Legislature.
Effective Date: July 1, 2027

Current Committee of Reference: House Economic Infrastructure Subcommittee

HB 1465 **Restrictions on Local Government Regulations After a Hurricane** by Andrade

Restrictions on Local Government Regulations After a Hurricane: Revises circumstances under which certain land use regulations may be enforced; revising persons authorized to bring certain civil actions; requires certain pending applications to be processed in a specified manner. Effective Date: July 1, 2026

Current Committee of Reference: House Intergovernmental Affairs Subcommittee

SB 1506 **Civil Litigation** by Yarborough

Civil Litigation; Revising the criteria that the court must consider in determining whether an award of money damages is excessive or inadequate, etc. Effective Date: 7/1/2026

Current Committee of Reference: Senate Judiciary

SB 1510 **Department of Environmental Protection** by Massullo, Jr.

Department of Environmental Protection; Deleting provisions creating the Environmental Regulation Commission; requiring that residential properties of a specified size located in a certain area connect to a central sewer system or upgrade to a specified type of nutrient-reducing wastewater treatment system; providing that remediation plans for certain properties may not prohibit or require certain actions relating to onsite sewage treatment and disposal systems; providing for a type 2 transfer of powers and functions of the Florida Communities Trust from the department to the Acquisition and Restoration
Council; revising legislative findings and intent for the Florida Communities Trust, etc. Effective Date: 7/1 /2026

Current Committee of Reference: Senate Environment and Natural Resources

---

SB 1548 **Affordable Housing** by Calatayud

Affordable Housing; Requiring counties and municipalities, respectively, to authorize certain residential use on property owned by a county, municipality, or school district under certain circumstances; revising the definition of the term “person”; revising a prohibition on discriminatory practices in land use decisions and in permitting of development to include housing that is affordable; waiving the state’s sovereign immunity for certain causes of action based upon housing discrimination, etc. Effective Date:
7/1/2026

Current Committee of Reference: Senate Community Affairs

HB 1553 **Admissibility of Evidence in Civil Cases** by Brackett

Admissibility of Evidence in Civil Cases : Revises provisions relating to evidence that is admissible to demonstrate past & future medical expenses in personal injury & wrongful death actions.Effective Date: upon becoming a law

Current Committee of Reference: House Civil Justice & Claims Subcommittee

---

SB 1558 **Admissible Evidence in Personal Injury or Wrongful Death Actions** by Massullo, Jr.

Admissible Evidence in Personal Injury or Wrongful Death Actions; Providing that evidence admissible in personal injury or wrongful death actions may be used for rebutting, as well as for proving, the amount of certain damages; providing that such evidence may be offered by any party, etc. Effective Date: 7/1/2026

Current Committee of Reference: Senate Judiciary

SB 1566 **Local Government Spending** by DiCeglie

Local Government Spending; Citing this act as the “Local Government Financial Transparency and Accountability Act”; revising the timeframe during which tentative budgets, and the length of time for which final budgets, must be posted on county websites; revising the timeframe during which a public hearing for an amendment to a county budget must be advertised; prohibiting a local government from expending public funds for the purpose of diversity, equity, and inclusion; requiring the Chief Financial Officer to conduct a specified evaluation, etc. Effective Date: 7/1/2026

Current Committee of Reference: Senate Community Affairs

SB 1572 **Department of Financial Services** by DiCeglie

Department of Financial Services; Establishing the Florida Agency for Fiscal Oversight within the Department of Financial Services; requiring local governments to notify the agency after authorizing specified referenda; deleting a

requirement that a specified hotline be operated for a certain amount of time each day; requiring specified employees to take a certain training annually; requiring that certain employees who report information to the Florida Agency for Fiscal Oversight be afforded the same protection as whistle-blowers, etc. Effective Date: 7/1/2026

Current Committee of Reference: Senate Banking and Insurance

SB 1608 **Assessment of Property with Decreasing Just Valuation** by Polsky

Assessment of Property with Decreasing Just Valuation; Prohibiting increases in certain assessed valuations if the just value of the property has decreased since the previous assessment, etc. Effective Date: On the effective date of the amendment to the State Constitution proposed by SJR 1610 or a similar joint resolution having substantially the same specific intent and purpose, if such amendment to the State Constitution is approved at the next general election or at an earlier special election specifically authorized by law for that purpose

Current Committee of Reference: Senate Finance and Tax

SB 1610 **Assessment of Property with Decreasing Just Valuation** by Polsky

Assessment of Property with Decreasing Just Valuation; Proposing amendments to the State Constitution to prohibit an increase in the value of certain assessments for property with a decreasing just valuation and to provide an effective date, etc.

Current Committee of Reference: Senate Finance and Tax

SB 1612 **Electronic Payments to Local Governments** by DiCeglie

Electronic Payments to Local Governments; Revising legislative intent; requiring each unit of local government to accept electronic payment online for payments received by and financial obligations owed to the unit of local government, etc. Effective Date: 7/1/2026

Current Committee of Reference: Senate Governmental Oversight and Accountability

---

SB 1614 **Florida Building Code** by Leek

Florida Building Code; prohibiting a local government from receiving state funds through a local funding initiative request to its legislative designation unless it has expended all funds through enforcing the Florida Building Code on authorized uses and does not have excess funds; providing that a local government is not eligible for additional state funds if it has been subject to a legislative committee's audit within a specified timeframe or if it fails to submit an affirmation to its legislative delegation, etc.
Effective Date: 7/1/2026

Current Committee of Reference: Senate Community Affairs

SB 1628 **Net-zero Policies by Governmental Entities** by Ávila

Net-zero Policies by Governmental Entities; Prohibiting governmental entities from adopting or requiring the adoption of net-zero policies; prohibiting governmental entities from expending government funds to support, implement, or advance net-zero policies; prohibiting governmental entities from imposing taxes, fees, penalties, charges, offsets, or assessments to advance net-zero policies; prohibiting governmental entities from implementing, administering, or enforcing a program that functions as a cap-and-trade program or has such effect, etc. Effective Date: 7/1/2026

Current Committee of Reference: Senate Finance and Tax

SB 1662 **Prohibited Preferences** by McClain

Prohibited Preferences; Prohibiting executive agencies from using racial or gender set-asides, preferences, or quotas when making certain decisions; revising factors local governments are authorized to consider in making decisions regarding local bids and contracts for public construction works; revising the criteria each agency uses to evaluate professional services; deleting a provision requiring consideration of minority and gender representation when making

appointments to the statewide advisory board for the Florida Small Business Development Center Network; deleting provisions requiring that preferences be given to specified entities seeking to attract minority conventions to Florida, etc. Effective Date: 7/1/2026

Current Committee of Reference: Senate Governmental Oversight and Accountability

SB 1724 **Utility Services** by Martin

Utility Services; Requiring certain public meetings as a condition precedent to the effectiveness of a new or extended agreement under which a municipality will provide specified utility services in other municipalities or unincorporated areas; limiting the portion of certain utility revenues which a municipality may use to fund or finance general government functions; revising provisions relating to permissible rates, fees, and charges imposed by municipal water and sewer utilities on customers located outside the municipal boundaries; requiring municipalities that provide specified utility services to report certain information by a specified date, and annually thereafter, to the Florida Public Service Commission, etc. Effective Date: Except as otherwise expressly provided in this act, this act shall take effect July 1, 2026

Current Committee of Reference: Senate Regulated Industries

SB 1726 **Housing** by Smith

Housing; Citing this act as the “Real Affordable Housing Relief Act”; deleting provisions prohibiting municipalities, counties, or other entities of local government from adopting or maintaining certain laws relating to rent control; authorizing counties and municipalities to create community land bank programs for a certain purpose; providing requirements for the sale of certain property to land banks; providing conditions for the subsequent resale of property acquired by land banks; requiring the Department of Financial Services to adopt a home resiliency grading scale for a specified purpose; creating the
Affordable Housing Construction Loan Program for a certain purpose, etc. Effective Date: July 1, 2026

Current Committee of Reference: Senate Community Affairs

Generated 1/30/2026 06:56 AM

AGENDA ITEM NO. 6.A

Item Cover Page

REGULAR COUNCIL AGENDA ITEM REPORT

DATE:	March 2, 2026
SUBMITTED BY:	Missy Arocha, Village Attorney's Office
ITEM TYPE:	Report
AGENDA SECTION:	VILLAGE ATTORNEY'S REPORT
SUBJECT:	Attorney Expenses
SUGGESTED ACTION:	

ATTACHMENTS:
WSH Invoices

WEISS SEROTA HELFMAN
COLE & BIERMAN, P.L.

2800 Ponce de Leon Boulevard
Suite 1200
Coral Gables, FL 33134
305-854-0800
Fax 305-854-2323
Tax ID No. 20-8112403

THIS INVOICE MAY CONTAIN ATTORNEY / CLIENT INFORMATION EXEMPT FROM PUBLIC DISCLOSURE. CONTACT US PRIOR TO RELEASE.

Village of Palmetto Bay
c/o Nick Marano
nmarano@palmettobay-fl.gov

February 9, 2026
Invoice # 312629

CLIENT: 2210 - Village of Palmetto Bay
Re: 014 Public Records Response Assistance

For Professional Services Rendered

Date		Services	Hours	Amount
01/09/26	jjq	Prepare For And Attend Conference With Client Re Pending Public Records Matters; Follow Up Re Same	1.30	406.90
01/12/26	jjq	Advise Client Re Request 2025-251	0.20	62.50
01/26/26	jjq	Review And Analyze Public Records Request Re Cody V. Merwitzer Litigation Records; Communicate With Litigators Regarding Documents Re Same	0.30	93.75
01/27/26	jjq	Review And Analyze Potentially Responsive Documents Re Public Records Request; Analyze Potential Exemptions; Conference Re Same; Communicate With Client Re Same	0.70	218.75
01/30/26	jjq	Review And Analyze Public Records Request 2026-33; Research Potential Exemptions Re Same; Conference Re Same	0.70	218.75
Total Professional Services			**3.20**	**$1,000.65**

Invoice Summary

For Professional Services	1,000.65
For Disbursements Incurred	0.00
Total this Invoice	**$1,000.65**

Payments Can Be Wire Transferred To:

[redacted]

PLEASE INCLUDE INVOICE NUMBER

WEISS SEROTA HELFMAN COLE & BIERMAN, P.L.

2800 Ponce de Leon Boulevard
Suite 1200
Coral Gables, FL 33134
305-854-0800
Fax 305-854-2323
Tax ID No. 20-8112403

THIS INVOICE MAY CONTAIN ATTORNEY / CLIENT INFORMATION EXEMPT FROM PUBLIC DISCLOSURE. CONTACT US PRIOR TO RELEASE.

Village of Palmetto Bay
c/o Nick Marano
nmarano@palmettobay-fl.gov

February 9, 2026
Invoice # 312630

CLIENT: 2210 - Village of Palmetto Bay
Re: 015 General Municipal

For Professional Services Rendered

Date		Services	Hours	Amount
01/05/26	jjq	Review And Revise Proposed Agenda Legislation; Communications With Client Re Same; Prepare For And Attend Agenda Prep Meeting; Research Re Road Vacation Matters; Communicates With And Advise Client Re Same; Review And Analyze Fall Prevent Program Guidelines And Requirements; Communications With Client Re Same	2.60	812.50
01/06/26	jem	Correspondence Re Pedestrian In Right-Of-Way Ordinance	0.30	93.75
01/06/26	slt	Address Flag Inquiry	0.20	62.50
01/06/26	jjq	Research Concerning First Amendment And Flag Display Matters; Communicate With Client Re Same; Communications With Client Re Farmer's Market Matters And Youth Entrepreneurship Item	0.70	218.75
01/06/26	lad	Confer Re Flags Display at Council Chambers; Analyze First Amendment Issues	0.70	218.75
01/07/26	jem	Communicate (with client) Regarding Traffic Ordinance Conference	0.20	62.50
01/07/26	jjq	Prepare For And Attend Staff Meeting Re Open And Pending Items	2.00	625.00
01/08/26	jjq	Communicate With Client Re Upcoming Agenda Items; Review And Revise Farmer's Market RFP; Communications With Client Re Same; Communicate With Client Re Charter Ballot MAtter	1.10	343.75
01/08/26	jrn	Conference Concerning Pursuit Of Surplus Funds On Foreclosure Matter	0.20	62.50
01/09/26	jjq	Conference With Client Re Roadway Solicitation Issues	0.40	125.00
01/09/26	jem	Prepare For And Attend Meeting With Councilwoman Regarding Traffic Ordinance	0.60	187.50

For Professional Services Rendered

Date		Services	Hours	Amount
01/09/26	jjq	Various Communications With Client Re Agenda Items And Meeting Matters; Follow Up Re Same; Attend To Questions Raised By Client	0.80	250.00
01/11/26	jjq	Communications With Client Re Agenda Items	0.30	93.75
01/12/26	jjq	Preparation For Council Meeting; Analyze Potential Issues Which May Arise; Follow Up Re Same	1.60	500.00
01/12/26	jjq	Communications With Client Re Council Meeting And Executive Session; Follow Up Re Matters Concerning Same; Attend to Last Minute Meeting Matters; Communications With Client Re Same And Agenda Matters; Preparation Re Same; Advise Client Re Farmer's Market Matters	2.20	687.50
01/12/26	jjq	Prepare For And Attend Regular Council Village Meeting	4.30	1,343.75
01/13/26	jjq	Review And Analyze Competing Ordinances; Advise Client Re Same; Revise Legislation In Accordance With council Approval; Communications With Client Re Same; Conference With Client Re Post-Council Meeting Matters And Follow Up; Review And Analyze Legislation Re Post-Meeting Questions	1.60	500.00
01/14/26	jem	Review And Evaluate Senate Bill 1434 And Draft Resolution in Opposition	2.60	812.50
01/14/26	jjq	Communications With Client Re Proposed Legislation; Communicate With Client Re E-Bike Matters; Conference Re Same; Research Re Same; Review And Revise Arbor Day Resolution And Agenda Memo; Communicate With Client Re Same; Review And Revise Traffic Calming Device Resolution And Agenda Memo; Communicate With Client Re Same; Review And Revise Draft Resolution Re SB 1434 And HB 979	2.30	718.75
01/15/26	jjq	Research Concerning Regulations On Dogs In Public Areas And Enforcement Of Same; Communicate With Client Re Same; Revise Proposed Resolution Opposing Bills Allowing Development On Environmentally Sensitive Land; Communicate With Client Re Same	0.80	250.00
01/15/26	jem	Conference Regarding Traffic Ordinance Feasibility	0.40	125.00
01/15/26	jem	Review And Analyze Revised Resolution Opposing Senate Bill 1434 And House Bill 979	0.20	62.50
01/16/26	jjq	Revise Resolution Re SB 1434 And HB 979; Communicate With Client Re Same; Communicate With Client Re February Agenda Items	0.30	93.75
01/16/26	jem	Review Correspondence Regarding Scoop The Poop County Ordinance	0.30	93.75
01/18/26	jjq	Review And Analyze Additional Agenda Submissions From Client	0.30	93.90
01/19/26	jjq	Review And Analyze Proposed Client Legislation; Communicate With Client Re Same	0.30	93.90
01/19/26	jjq	Conference Concerning E-Bike Issues	0.30	93.75
01/19/26	cb	Attend To Follow-Up Relating To Micromobility Inquiry	0.40	125.00

For Professional Services Rendered

Date		Services	Hours	Amount
01/20/26	jjq	Conference Concerning E-Bike Regulations; Communicate With Client Re Same; Review And Revise Proposed Legislation Supporting State Bills; Communications With Client Re Same; Conference With Client Re February Agenda Matters; Follow Up Re Same; Prepare Business Impact Estimates	1.90	593.75
01/20/26	cb	Initial Review Of Inquiry Relating To Micromobility Matters	0.60	187.50
01/20/26	cb	Receipt And Review Of Information Remitted In Correspondence Relating To Micromobility Inquiry	0.30	93.75
01/20/26	cb	Prepare Correspondence Relating To Micromobility Inquiry	0.30	93.75
01/21/26	jjq	Communications With Client Re Agenda Matters; Review And Analyze Proposed Agenda Items And Comments; Review And Analyze Proposed Agreements; Communications With Client Re Same; Communicate With Ms. Leach Re Florida PACE Funding Agency ILA; Communicate With Client Re Same	1.40	437.50
01/21/26	cb	Prepare Follow-Up Correspondence Relating To Micromobility Inquiry	0.30	93.75
01/22/26	jem	Conference Regarding Traffic Ordinance Issues	0.20	62.50
01/22/26	cb	Receipt And Review Of Information Remitted In Correspondence Relating To Setting Meeting For Micromobility-Related Inquiries	0.30	93.75
01/22/26	cb	Receipt And Review Of Additional Information Remitted In Correspondence Relating To Setting Meeting For Micromobility-Related Inquiries	0.30	93.75
01/22/26	cb	Receipt And Review Of Information Remitted In Correspondence Relating To Micromobility Inquiry	0.30	93.75
01/23/26	jem	Prepare For And Attend Conference Regarding Case Law On Traffic Ordinance	0.80	250.00
01/23/26	slt	Confer to Evaluate and Analyze Inquiry re Solicitation Ordinances	0.50	156.25
01/23/26	jjq	Conference With Client Re Agenda And Meeting Preparation; Follow Up Re Same; Communicate With Client Re Notice Matters	0.80	250.40
01/23/26	cb	Prepare Correspondence Relating To Micromobility Inquiry	0.30	93.75
01/26/26	jjq	Communications With Client Re Veteran's Park Matters	0.30	93.75
01/26/26	jjq	Communications With Client Re AIPP Project; Conference Re Same; Analyze Sidewalk Company Responses And Client Considerations; Communications Re Same	0.70	219.10
01/27/26	jem	Conference Regarding Charter Review Committee	0.20	62.50
01/27/26	jjq	Conference Concerning Inquiry Regarding Panhandling Legislation; Follow Up Re Same; Review And Analyze Dekora Contract; Review And Revise Proposed Dekora Termination Notice; Communicate With Client Re Same	0.80	250.00
01/27/26	jem	Draft Variance Ordinance	0.40	125.00
01/28/26	jem	Revise Hardship Ordinance	2.20	687.50

For Professional Services Rendered

Date		Services	Hours	Amount
01/28/26	jem	Review And Analyze Letter From The Euclid Group Regarding Coastal Residential And Shares At Palmetto Bay Development Fees	0.50	156.25
01/28/26	jjq	Prepare For And Attend Staff Meeting; Conference With Client Re Building And Impact Fee Matters; Conference With Client Re PACE ILA; Conference With Client Re Procurement And Bidding Issues; Follow Up Re Same	2.70	845.10
01/28/26	rcp	Review And Analyze Charter Revision Commission Meeting Notes Backup And Proposals	1.00	312.50
01/29/26	lsl	Review And Revise Art In Public Places Agreement Regarding Call to Artists	1.00	312.50
01/29/26	jjq	Conference Concerning First Amendment Matters; Conferences Concerning Charter Review Commission Matters; Communications With Client Re Same; Review And Analyze Prior Development Approval Items; Analyze Charter Amendment Proposals And Potential Legal Issues Re Same; Analyze Potential Ballot Language Required For Proposed Charter Amendments; Research Re Same	1.80	562.50
01/29/26	rcp	Prepare For And Attend Charter Revision Commission Meeting	5.00	1,562.50
01/30/26	jem	Confenrece Regarding Charter Review Committee Meeting	0.20	62.50
01/30/26	jjq	Communications With Client Re Post-Charter Review Commission Meeting Matters; Conferences Re Same; Analyze Issues Raised And Last Meeting And Follow Up Re Same	0.80	250.00
01/31/26	jjq	Preparation For Council Meeting; Analyze Questions And Issues Which May Arise; Follow Up Re Same	1.30	406.90
Total Professional Services			**55.20**	**$17,253.05**

Invoice Summary

For Professional Services	17,253.05
For Disbursements Incurred	0.00
Total this Invoice	**$17,253.05**

Payments Can Be Wire Transferred To:

[redacted]

PLEASE INCLUDE INVOICE NUMBER

WEISS SEROTA HELFMAN COLE & BIERMAN, P.L.

2800 Ponce de Leon Boulevard
Suite 1200
Coral Gables, FL 33134
305-854-0800
Fax 305-854-2323
Tax ID No. 20-8112403

THIS INVOICE MAY CONTAIN ATTORNEY / CLIENT INFORMATION EXEMPT FROM PUBLIC DISCLOSURE. CONTACT US PRIOR TO RELEASE.

Village of Palmetto Bay
c/o Nick Marano
nmarano@palmettobay-fl.gov

February 9, 2026
Invoice # 312631

CLIENT: 2210 - Village of Palmetto Bay
Re: 016 Legislative Matters

For Professional Services Rendered

Date		Services	Hours	Amount
01/21/26	jjq	Communicate With Client Re Proposed Bills Which May Impact Village; Communications With Mr. Salzverg Re Same; Conference Re Same	0.70	218.75
01/23/26	jjq	Communications With Client Re SB 1434 And Other Potential Bills Of Interest; Conference Concerning Strategy Re SB 1434; Follow Up Re Same	0.70	219.10
01/23/26	rcp	Confer Internally And With Florida Senate Representative Regarding Infill Legislation Bill	0.50	156.25
01/24/26	jjq	Preparation Of Potential Legislative Proposals For State Consideration; Revise Same; Conference Re Same	0.60	187.80
01/26/26	jjq	Conference Concerning Matters Re SB 1434; Research Re Developer Backing Legislative Item; Prepare Potential Carve Outs For State Legislation; Follow Up Re Same	0.70	218.75
01/27/26	jjq	Communicate With Mr. Salzverg Re SB 1434; Communications With Client Re Same; Follow Up On Discussions Re Same	0.50	156.25
01/29/26	jjq	Conference With Client Re SB 1434 Matters And Strategy; Communications With Mr. Salzverg Re Same; Conference Re Same	0.70	218.75
01/30/26	jjq	Communications With Client Re SB 1434 Matters; Communications With Mr. Salzverg Re Same; Revise Potential Submissions Re Same	0.80	250.00
01/30/26	rcp	Confer With Florida Senate Representative Regarding Infill Legislation	0.30	93.75
Total Professional Services			**5.50**	**$1,719.40**

Invoice Summary

For Professional Services	1,719.40
For Disbursements Incurred	0.00
Total this Invoice	**$1,719.40**

Payments Can Be Wire Transferred To:

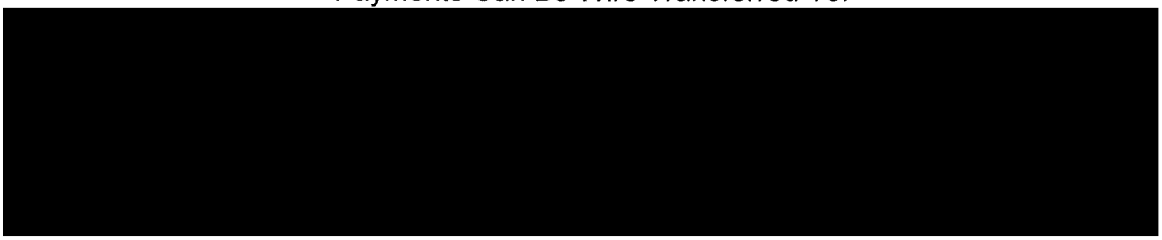

PLEASE INCLUDE INVOICE NUMBER

WEISS SEROTA HELFMAN COLE & BIERMAN, P.L.

2800 Ponce de Leon Boulevard
Suite 1200
Coral Gables, FL 33134
305-854-0800
Fax 305-854-2323
Tax ID No. 20-8112403

THIS INVOICE MAY CONTAIN ATTORNEY / CLIENT INFORMATION EXEMPT FROM PUBLIC DISCLOSURE. CONTACT US PRIOR TO RELEASE.

Village of Palmetto Bay
c/o Nick Marano
nmarano@palmettobay-fl.gov

February 9, 2026
Invoice # 312632

CLIENT: 2210 - Village of Palmetto Bay
Re: 017 Planning Matters

For Professional Services Rendered

Date		Services	Hours	Amount
01/05/26	jjq	Communications With Client Re Zoning Matters Related To Village Properties	0.40	125.00
01/06/26	jjq	Communicate With Client Re Village Facility Zoning	0.40	125.00
01/07/26	jjq	Communicate With Client Re Off Street Parking; Communicate With Client Re Road Vacation	0.30	93.75
01/09/26	jjq	Conference Concerning HGreg Unity Issues; Communicate With Client Re Same	0.50	156.50
01/09/26	lad	Confer Re Unity of Tittle and Opinion for Honda Auto Site and Adjacent Parcel	0.40	125.00
01/12/26	jjq	Research Concerning SB 1434; Analyze Potential Impacts Of Same	0.40	125.00
01/12/26	kme	Receipt And Review Of Reviewed Unity Of Title Documents For Statutory Sufficiency	0.30	93.75
01/12/26	kme	Receipt And Review Of Searched Public Records For Existing Mortgages Encumbering Subject Parcels	0.40	125.00
01/12/26	kme	Receipt And Review Of Reviewed Recorded Mortgages For Cross-Default And Cross-Collateralization Provisions	0.50	156.25
01/12/26	kme	Receipt And Review Of Analyzed Mortgagee Consent Requirements For Unity Of Title Recordation	0.30	93.75
01/12/26	kme	Review And Analyze Compared Title Opinion To Public Records To Confirm All Matters Properly Addressed	0.50	156.25
01/12/26	kme	Research Concerning Cross-Collateralization Document Covering Both Parcels	0.40	125.00
01/12/26	kme	Correspondence Re Drafted Comments And Clarifications To Team Regarding Title Issues And Requirements	0.40	125.00

For Professional Services Rendered

Date		Services	Hours	Amount
01/13/26	jjq	Review And Revise Proposed February Captions; Communications With Client Re Same; Communicate With Mr. Cost Re Unity Matters	0.60	187.50
01/14/26	jjq	Review, Revise, And Approve Proposed February Items; Review And Analyze Proposed Ordinance Re Residential Driveway Regulations; Communicate With Client Re Same	0.50	156.25
01/15/26	jjq	Communicate With Client Re Potential Driveway Code Amendments; Communications With Mr. Cost Re Unity Of Title Matters	0.40	125.00
01/15/26	lad	Conference with Village and Property Reps Re Unity of Title Discussions Pre-Owned Lots	0.50	156.25
01/16/26	jjq	Communicate With Client Re Unity Of Title Matters; Conference With Morgan Auto Group And Client Re Options For Pre-Owned Parking Lots	0.50	156.25
01/16/26	lad	Prepare for and Attend Teams Call with Village Planners and Mr. Cost and Mr. Santos Re Morgan Automotive Group Combination of Parcels (17920 and 17821 S Dixie Highway)	1.00	312.50
01/20/26	jjq	Communicate With Client Re Zoning Hearing	0.20	62.50
01/21/26	jjq	Preparation For Zoning Hearing; Communications With Client Re Same; Follow Up Re Same	1.10	343.75
01/22/26	jjq	Communications With Client Re Future Zoning Meeting Matters; Analyze And Advise Re Notice And Advertising Matters Re Same; Follow Up Re Same	0.60	187.50
01/25/26	jjq	Preparation For Zoning Meeting	0.50	156.50
01/26/26	jjq	Communicate With Client Re Upcoming Zoning Meeting Matters	0.20	62.50
01/28/26	jjq	Communicate With Mr. Santos Re Declaration In Lieu; Communications With Client Re Old Burger King Property	0.40	125.00
01/29/26	jjq	Conference With Client Re Burger King Development Matters	0.30	93.75
01/30/26	jjq	Conference Concerning HGreg Zoning And Unity Matters; Communicate With Client Re Same; Communicate With Mr. Behar Re Westminster Unity Matters; Analyze Issues Re Same; Follow Up And Conference Re Same	1.30	406.25
01/30/26	jjq	Review And Revise Bravo Estates Covenant; Communicate With Client Re Same	0.50	156.25
01/30/26	lad	Review Proposed Declaration Sample and Review Code Re Zoning and Permitted Uses (17821 S Dixie Hwy and 17920 S Dixie Hwy)	0.80	250.00
Total Professional Services			**14.60**	**$4,563.00**

Invoice Summary

For Professional Services	4,563.00
For Disbursements Incurred	0.00
Total this Invoice	**$4,563.00**

Payments Can Be Wire Transferred To:

[redacted]



PLEASE INCLUDE INVOICE NUMBER

WEISS SEROTA HELFMAN
COLE & BIERMAN, P.L.

2800 Ponce de Leon Boulevard
Suite 1200
Coral Gables, FL 33134
305-854-0800
Fax 305-854-2323
Tax ID No. 20-8112403

THIS INVOICE MAY CONTAIN ATTORNEY / CLIENT INFORMATION EXEMPT FROM PUBLIC DISCLOSURE. CONTACT US PRIOR TO RELEASE.

Village of Palmetto Bay
c/o Nick Marano
nmarano@palmettobay-fl.gov

February 9, 2026
Invoice # 312633

CLIENT: 2210 - Village of Palmetto Bay
Re: 021 Code Enforcement

For Professional Services Rendered

Date		Services	Hours	Amount
01/07/26	jjq	Communications With Client Re 8265 SW 176 Terrace Liens; Conference Re Same	0.40	125.00
01/07/26	jla	Review And Respond To Correspondences On Possible Foreclosure Of Village Lien Against 8265 SW 176 Terrace	0.40	125.00
01/08/26	jla	Review And Analyze Liens Against 8265 S.W. 178 Terrace To Determine Status Based On Foreclosure	0.90	281.25
01/08/26	jjq	Conference Concerning Code Enforcement Lien Collection And Order Issues	0.40	125.00
01/08/26	jla	Correspondence On Bankruptcy Relating To Liens Against 8265 S.W. 178 Terrace	0.40	125.00
01/08/26	jla	Drafted Correspondence On Status Of Liens Against 8265 S.W. 178 Terrace	0.80	250.00
01/12/26	jla	Correspondence On Status Of Village Liens Against 8265 S.W. 176 Terrace	0.60	187.50
01/15/26	jjq	Communicate With Client Re Code Enforcement Orders; Conference Re Updating Same	0.50	156.25
01/16/26	jjq	Communications With Client Re Code Orders; Conference Re Same; Follow Up Re Same	0.50	156.25
01/16/26	jla	Reviewed Correspondences On Format For Code Enforcement Liens	0.40	125.00
01/20/26	jla	Correspondence On Revision Of Code Enforcement Liens	0.40	125.00
01/27/26	jjq	Advise Client Re 8265 SW 176 Terrace Liens	0.20	62.50
01/27/26	jla	Telephone Call With Vanessa Bencomo On Revision Of Special Master Order Forms	0.30	93.75
01/27/26	jla	Review And Analyze Special Master Order And Special Assessment Forms	0.60	187.50
01/27/26	jla	Review And Analyze Code Enforcement Ordinance To Prepare Draft Special Master Orders	1.00	312.50

For Professional Services Rendered

Date		Services	Hours	Amount
01/30/26	jla	Revised Special Master Order Form	1.00	312.50
01/30/26	jla	Telephone Call With Vanessa Bencomo On Special Master Orders	0.40	125.00
Total Professional Services			**9.20**	**$2,875.00**

Invoice Summary

For Professional Services	2,875.00
For Disbursements Incurred	0.00
Total this Invoice	**$2,875.00**

Payments Can Be Wire Transferred To:



PLEASE INCLUDE INVOICE NUMBER

WEISS SEROTA HELFMAN
COLE & BIERMAN, P.L.

2800 Ponce de Leon Boulevard
Suite 1200
Coral Gables, FL 33134
305-854-0800
Fax 305-854-2323
Tax ID No. 20-8112403

THIS INVOICE MAY CONTAIN ATTORNEY / CLIENT INFORMATION EXEMPT FROM PUBLIC DISCLOSURE. CONTACT US PRIOR TO RELEASE.

Village of Palmetto Bay
c/o Nick Marano
nmarano@palmettobay-fl.gov

February 9, 2026
Invoice # 312635

CLIENT: 2210 - Village of Palmetto Bay
Re: 025 Purchasing/Procurement

For Professional Services Rendered

Date		Services	Hours	Amount
01/15/26	jjq	Analyze Asphalt Trails Issues; Advise Client Re Same	0.30	93.90
01/16/26	jjq	Analyze Asphalt Trails Procurement Item; Conference Re Same; Advise Client Re Same	0.60	187.50
01/27/26	jjq	Communications With Client Re Invitation To Bid Matters; Review And Analyze Proposed ITB Items And Form Agreement	0.60	187.50
01/27/26	lsl	Review And Revise Call To Artist Letter And Program Agreement	1.00	312.50
Total Professional Services			**2.50**	**$781.40**

Invoice Summary

For Professional Services	781.40
For Disbursements Incurred	0.00
Total this Invoice	**$781.40**

Payments Can Be Wire Transferred To:

[redacted]

PLEASE INCLUDE INVOICE NUMBER

WEISS SEROTA HELFMAN
COLE & BIERMAN, P.L.

2800 Ponce de Leon Boulevard
Suite 1200
Coral Gables, FL 33134
305-854-0800
Fax 305-854-2323
Tax ID No. 20-8112403

THIS INVOICE MAY CONTAIN ATTORNEY / CLIENT INFORMATION EXEMPT FROM PUBLIC DISCLOSURE. CONTACT US PRIOR TO RELEASE.

Village of Palmetto Bay
c/o Nick Marano
nmarano@palmettobay-fl.gov

February 9, 2026
Invoice # 312636

CLIENT: 2210 - Village of Palmetto Bay
Re: 026 Village Clerk

For Professional Services Rendered

Date		Services	Hours	Amount
01/08/26	jjq	Advise Client Re Notice Requirements	0.20	62.50
01/12/26	jjq	Communications With Client Re Joint-EAC Meeting; Communications With Client Re General Committee Issues	0.40	125.00
01/13/26	jjq	Review And Revise Late Filing Assessment Letter; Research Support For Same; Communications With Client Re Same	0.60	187.50
01/14/26	jjq	Communications With Client Re Elections Filing Items; Advise Client Re Village Survey Matters; Research Proper Calculations For Campaign Filing Fines; Analyze Issues Re Same; Advise Client Re Same	1.10	343.75
01/15/26	jjq	Advise Client Re Campaign Finance Report Matters	0.20	62.50
01/30/26	jjq	Communications With Client Re Meeting And Agenda Matters	0.30	93.75
Total Professional Services			**2.80**	**$875.00**

Invoice Summary

For Professional Services	875.00
For Disbursements Incurred	0.00
Total this Invoice	**$875.00**

Payments Can Be Wire Transferred To:

[redacted]

[redacted]

PLEASE INCLUDE INVOICE NUMBER

WEISS SEROTA HELFMAN
COLE & BIERMAN, P.L.

2800 Ponce de Leon Boulevard
Suite 1200
Coral Gables, FL 33134
305-854-0800
Fax 305-854-2323
Tax ID No. 20-8112403

THIS INVOICE MAY CONTAIN ATTORNEY / CLIENT INFORMATION EXEMPT FROM PUBLIC DISCLOSURE. CONTACT US PRIOR TO RELEASE.

Village of Palmetto Bay
c/o Nick Marano
nmarano@palmettobay-fl.gov

February 9, 2026
Invoice # 312637

CLIENT: 2210 - Village of Palmetto Bay
Re: 027 Building Department

For Professional Services Rendered

Date		Services	Hours	Amount
01/05/26	jjq	Research Concerning Vacation Of Portion OF SW 156 Street; Review And Analyze Plat And Deed Documents; Communications With Client Re Same; Review And Advise Client Re Notice Issues; Review Sand Revise Resolution Caption; Research Historical Plats And Surveys; Analyze Impacts And Import Of Same; Advise Client Re Reversionary Interest Matters; Prepare Analysis Re Same	1.60	500.00
01/05/26	eom	Title Research To Confirm Limits of Plat Book B, Page 17; Confer And Correspond Re The Same	1.00	312.50
01/06/26	jjq	Communications With Client Re Vacation Of ROW	0.30	93.75
01/22/26	jjq	Communicate With Client Re Building Fee Matters	0.30	93.90
01/27/26	jjq	Communicate With Client Re Building Fee Matters; Research And Analyze Fee Regulations; Conference Re Same	0.70	218.75
01/29/26	jem	Confenrece Regarding Meeting On Coastland Residential And Shores	0.20	62.50
01/29/26	jem	Prepare For And Attend Charter Review Committee Meeting	7.80	2,437.50
Total Professional Services			**11.90**	**$3,718.90**

Invoice Summary

For Professional Services	3,718.90
For Disbursements Incurred	0.00
Total this Invoice	**$3,718.90**

Payments Can Be Wire Transferred To:

[redacted]

PLEASE INCLUDE INVOICE NUMBER

AGENDA ITEM NO. 7.B

Item Cover Page

REGULAR COUNCIL AGENDA ITEM REPORT

DATE:	March 2, 2026
SUBMITTED BY:	Missy Arocha, Village Clerk's Office
ITEM TYPE:	Report
AGENDA SECTION:	VILLAGE CLERK'S REPORT
SUBJECT:	Member Solicitation: Education Advisory Committee
SUGGESTED ACTION:	

ATTACHMENTS:
Notice-EAC Member Solicitation

COMMITTEE MEMBER WANTED
EDUCATION ADVISORY COMMITTEE ("EAC")

If you are interested in volunteering or becoming more involved in your community, consider joining the Education Advisory Committee. The Village of Palmetto Bay is currently accepting applications for a prospective committee member.

Purpose/Mission:

The Education Advisory Committee formerly known as the Educational Compact Advisory Board entered into an Education Compact with Miami Dade County Public Schools via Resolution 2013-63 on September 9, 2013, to bring together each organization's collective resources for the benefit of the students and residents within the Village.

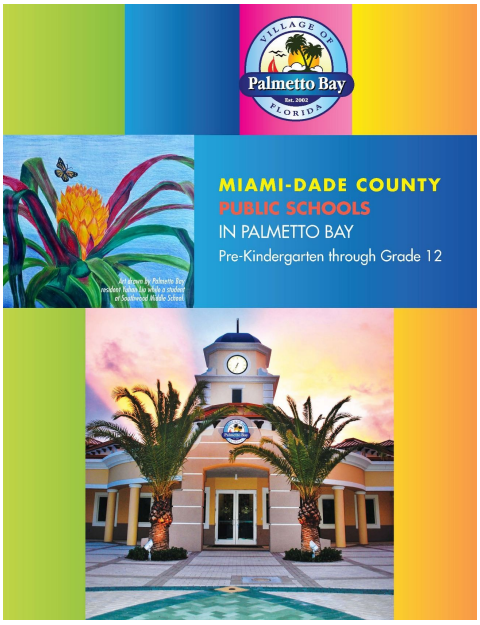

Members of the Education Advisory Committee are appointed by Palmetto Bay Village Council. This committee serves the Village by reviewing and supporting the terms of the Education Compact that was entered into between the Village and Miami-Dade County Public Schools and is bound by the State of Florida Sunshine Laws. This board meets, at a minimum, the last Tuesday of every month at 6:30 p.m. at Village Hall Municipal Center, except for holidays observed by MDCPS.

Membership/Qualifications:

The committee is to be composed of five (5) members. The members shall have experience, training, or knowledge in the field of Education. Appointees must be residents of the Village, with the exception of a registered Dade Partner, and cannot be members of any other Village Board, Committee, or Task Force. Appointees must have at least one criteria from the following categories:

(i) a resident who is a parent with a child currently attending a public school in the Village;
(ii) a resident who has taught for a minimum of three (3) years in a MDCPS public school in Miami-Dade County;
(iii) a business owner in the Village that is a registered Dade Partner with a public school in the Village;
(iv) a resident with a Bachelor's Degree, or a Master's Degree in Education, Educational Leadership or related education degree and is currently working in or retired from MDCPS.

Residents interested in applying to serve on the EAC must provide a resume, a list of qualifications including the submittal of an Advisory Board/Committee Application to the Office of the Village Clerk at: clerk@palmettobay-fl.gov. The application can be obtained from the Village Clerk or on the Village website at: www.palmettobay-fl.gov.

For additional information and/or inquiries, please contact Missy Arocha, Village Clerk at (305) 259-1234, or via email to: clerk@palmettobay-fl.gov.

AGENDA ITEM NO. 7.C

Item Cover Page

REGULAR COUNCIL AGENDA ITEM REPORT

DATE:	March 2, 2026
SUBMITTED BY:	Missy Arocha, Village Clerk's Office
ITEM TYPE:	Report
AGENDA SECTION:	VILLAGE CLERK'S REPORT
SUBJECT:	Member Solicitation: Parks & Recreation Committee
SUGGESTED ACTION:	

ATTACHMENTS:
Notice-PRC Member Solicitation

COMMITTEE MEMBER WANTED
PARKS & RECREATION COMMITTEE ("PRC")

Interested in volunteering and getting involved in your community? Join the Parks & Recreation Committee. The Village of Palmetto Bay is now accepting applications for a prospective committee member.

Purpose/Mission:

The mission of the Parks & Recreation Committee is to provide recommendations to the Village Council regarding village parks and recreation levels of service and in matters of community engagement and public awareness.



The State of Florida Sunshine Laws and Public Records Law binds this committee. The committee meets, at a minimum, the first Thursday of every month at 6:00 p.m. at Village Hall Municipal Center.

Qualifications/Membership:

Prospective committee members must be a resident of the Village, be employed with the Village, or own a business located in the Village and shall serve a two-year term once appointed. The committee comprises at least five members, and the Village Council shall each have one appointment.



Residents interested in applying to serve on the PRC must submit an Advisory Board/Committee Application to the Office of the Village Clerk at: clerk@palmettobay-fl.gov. The application can be obtained from the Village Clerk or the Village website at: www.palmettobay-fl.gov.

For additional information and inquiries, please contact Missy Arocha, Village Clerk, at (305) 259-1234 or at clerk@palmettobay-fl.gov.

www.palmettobay-fl.gov

AGENDA ITEM NO. 8.A

Item Cover Page

REGULAR COUNCIL AGENDA ITEM REPORT

DATE:	March 2, 2026
SUBMITTED BY:	Missy Arocha, Village Clerk's Office
ITEM TYPE:	Minutes
AGENDA SECTION:	BOARD AND COMMITTEE REPORTS
SUBJECT:	Charter Revision Commission Meeting (December 16, 2025)
SUGGESTED ACTION:	

ATTACHMENTS:
Minutes-CRC-2025-12-16

MINUTES
Village of Palmetto Bay
Charter Revision Commission Meeting
Tuesday, December 16, 2025

Members Present: Shelly Stanczyk, Brian Tannebaum, Marc Levy (Chair), David Zisman, and Paul Schwiep.

Others Present: Missy Arocha (Village Clerk), John Quick (attorney), Marsha Matson (council member), Steve Cody (council member), Nick Marano (via zoom; village manager).

1. Call to Order: Meeting was called to order at 5:45 p.m. by clerk Arocha.

2. Public Comments: Public comments were received from Gary Pastorella and Henry Clifford

3. Minutes: Minutes of prior meeting on October 23, 2025 were approved as circulated.

4. Review of Charter: Commission returned to charter review.

   a. Article 5: Discussion had regarding run-off elections and timing. Clerk will look to see history of run-offs and turn out of run-offs. No action taken.

   b. Single Member Districts: Member Zisman raised the issue of single member districts. Member Schwiep voiced new openness to the concept. Liaison Cody pointed out that district lines would potentially need to be redrawn depending on how much variation exists in population among districts. Broad discussion had. Member Zisman made motion to place the issue on the ballot. Motion passed three to two with member Tannebaum and Stancyzk voting nay. Attorney Quick to draft language.

   c. Article 6: Proposal made to amend Article 6 to make clear that CRC proposals will be forwarded to the Council for passing to the voters. All believed this proposal had merit. Motion made by member Stanczyk to request Village attorney to draft language and bring back to next meeting for final vote. Second by member Tannebaum. Motion passed unanimously.

   d. Conflict of Interest: Member Stanczyk raised conflict of interest policy. Member Stanczyk stated that she believed it was important to have clarity as to what activities would constitute a conflict. Generally, she mentioned that a conflict would arise where a manager (or other charter officer)

engaged in outside employment within the scope of their employment for the Village. She will continue to buff and polish a proposal to provide for discussion after further research. Tannebaum suggested that reporting should be required for all sources of income. This should apply to all charter officers. Member Stanczyk is working on this and will provide a possible draft.

e. For cause termination of manager discussed. Current manager is at will. Current manager (attending online) mentioned that bad past experiences should not drive charter requirements, which all thought was reasonable. Current manager believed that this issue is best addressed by the contract with the employee. No decision made.

f. 8.1: Miami Lakes, Cutler Bay and Palmetto Bay are the only municipalities that contract with Miami-Dade County for police services. Chair Levy asked about the cost of contracting with the County, and whether Village might be better off with its own department. Member Schwiep pointed out that Miami-Dade County police officers are extremely high quality officers. Manager Marano has studied the costs in comparison to operating our own police department. His view is that it is about a wash financially. What the Village pays the County for each deputy (charged for training, equipping, 911, etc.) is about $600k per. Pinecrest pays for chief, assistant chief, three captains, plus several lieutenants. It is about the same. It really comes down to effectiveness. One could make arguments either way. Manager Marano said he has not had any issues with County officers, who are professional and responsive. There would be a substantial initial outlay to create our own police officer. A positive would be complete control over leadership and agenda of police department. Big negative would be substantial capital outlay to create a police force. In addition, the Village would incur all costs for recruiting, maintaining and managing the police force. No proposals made for altering charter in this regard.

g. USDA Property. Discussion had regarding including language in charter to protect this property should it ever be surplused by federal government. Member Schwiep to work with Attorney Quick to prepare proposal.

h. <u>10.2 On Neighborhood Protection</u>. Chair Levy asked if this provision is still operative given changes at County and State level. Under Live Local statute, Village is limited as to what it can restrict. Member Stanczyk proposed putting a 45-foot height limit on new construction. Motion made by member Stanczyk, seconded by member Schwiep, to continue work on proposed language. Member Stanczyk will put something together.

i. Member Tannebaum's Proposal on Bill of Rights. Member Tannebaum asked that language on public comments be adopted for presentation. Motion made and seconded to include language proposed by Tannebaum. Motion passed unanimously.

5. New Business: Chair Levy made a proposal to discuss language in charter to prohibit sale or lease of Village property for school. This will be taken up at next meeting.

6. Next Meeting: Proposed to meet third Wednesday of every month beginning January 29 at 6 p.m. Other dates would be February 18; March 18; May 20 Decided to wait until the issue of the Commission's authority is resolved before meeting again.

Meeting adjourned at 7:35 p.m. after motion passed unanimously to adjourn.

AGENDA ITEM NO. 8.B

Item Cover Page

REGULAR COUNCIL AGENDA ITEM REPORT

DATE:	March 2, 2026
SUBMITTED BY:	Missy Arocha, Village Clerk's Office
ITEM TYPE:	Minutes
AGENDA SECTION:	BOARD AND COMMITTEE REPORTS
SUBJECT:	Education Advisory Committee (December 2, 2025)
SUGGESTED ACTION:	

ATTACHMENTS:
Minutes-EAC-2025-12-02

VILLAGE OF PALMETTO BAY
EDUCATION ADVISORY COMMITTEE AGENDA
Tuesday, December 2, 2025, at 6:30 p.m.
9705 E. Hibiscus Street – Municipal Center
Palmetto Bay, FL 33157

1. Welcome, Call to Order and Attendance
    a. Meeting called to order at 6:36pm

    Attendance: Jorge Pulido, Chair; Diane Quick, Secretary; Andrea Loring, Member; Natalie Granda, Member; Sofia de la Grana, School Board Member Luisa Santos' Office; Mayor Karyn Cunningham, Council Liaison; Olga Cadaval, Staff Liaison; Fanny Carmona, Parks Department

    Chair Pulido opened the meeting thanking Council Member Steve Cody for his service as the Council Liaison to this committee and welcoming the new Council Liaison, Mayor Karyn Cunningham.

2. Approval of Minutes
    a. Meeting of October 28, 2025 – minutes were approved

3. Public Comments
    a. No public comments.

4. Updates
    a. School Board: Ms. de la Grana attended on behalf of School Board Member Luisa Santos, District 9. She shared the following updates:
        i. December 8th: Howard Drive PTA meeting at 9:00am to discuss its placement on the list of schools to be impacted by co-location with Schools of Hope. School Board Member Santos and Mayor Cunningham will be in attendance. Meeting is open to the community.
            1. Discussion followed regarding the co-location process, including what the process is for the district to challenge the request to co-locate, and what co-location looks like. Chair Pulido asked about the status of other compact schools about co-location.
            2. Mayor Cunningham asked about the impending closure of R.R. Moton elementary school and the redrawing of boundaries to send those students to Dr. Henry E. Perrine Academy of the Arts as well as another school outside of Palmetto Bay. Parents at R.R. Moton were notified of the closure via a letter. Parents are invited to a meeting downtown this week and a future meeting may be held at the school site. The committee asked what will happen to R.R. Moton.
            3. Chair Pulido asked if there was an update on efforts to bring early education partners to underenrolled schools like Howard Drive Elementary school. This was an initiative that School Board Member Santos discussed at an earlier committee meeting.

4. Chair Pulido discussed the possibility of the committee making recommendations to Council to pass resolutions/ordinance to support schools targeted by co-location.

ii. Night in D9 is taking place on February 28th at Coral Reef Senior High School. Aiming to have 100 partners tabling at the resource fair taking place at the event. Invites Palmetto Bay to have a table to promote its local schools.

iii. Michele Drucker, a PTA leader on environmental matters, was informed that the committee would be interested in having her attend a meeting to discuss potential initiatives and grants related to environmental efforts.

b. Village Council Update:
   i. Mayor Cunningham shared that the committee's recommendation for the Council to adopt the MDCPS legislative agenda passed 4-1.
   ii. The State of the Village is taking place on December 11th at 6pm in Palmetto Bay Park. Theme is "One Village One Team". She shared who will be honored at the event.

c. Village Staff Update:
   i. Olga Cadaval and Fanny Carmona are in attendance for new business related to upcoming events.

5. Old Business
   a. No old business.

6. New Business
   a. Co-location of School of Hope Schools
      i. Ms. Quick mentioned that the Vice-Mayor of Pinecrest, Jerry Greenberg, wants to coordinate with EACs in each municipality regarding co-location and its impact on our local schools. Chair Pulido said he would reach out to Vice-Mayor Greenberg to follow up and get involved on behalf of the committee.

   b. February Black History Month event
      i. Chair Pulido explained that the EAC would cede its February meeting date to an event related to Black History Month. Ms. Loring proposed a read-a-long for young kids. The chosen readers will decide which books to read, and the Books & Books foundation will donate copies of the books to the attendees. Discussion ensued regarding the details including age range of kids (4-11 is the agreed upon age range) and the number of children that may attend. Ms. Quick suggested a free RSVP

request for food planning purposes and promising a free book to those who register (to determine the number of books needed). Chair Pulido suggested promoting this to schools via the PTAs. Timeline suggested for promotion is mid-January.

c. Celebration of winner of photography contest
    i. Ms. Loring requested that the cover of the Palmetto Bay school brochure be changed to the winning photo. Mayor Cunningham shared that the winners will also be recognized at the tree lighting ceremony on December 6th. Further discussion ensued about ways to recognize students from the Village.

d. Addressing the Redrafting the Compact and Future Town Hall
    i. Ms. Loring asked if time can be reserved at a future meeting to discuss updates to the Education Compact. Ms. Quick explained that she can email the Clerk to request the addition of an item to future agendas.
    ii. Discussion ensued about holding an event at the new community center once it opens.
    iii. Mayor Cunningham suggests holding a roundtable on co-location with the three municipalities.
    iv. Chair Pulido discussed holding a separate meeting to discuss updating the compact. Ms. Quick identified other stakeholders who would need to be involved with any updates, such as the school district.

e. Possible event in conjunction with Holocaust Remembrance Day 2026
    i. Ms. Quick shared a proposal by Rosemary Fuller honoree Ruth Gordon to hold an event at the JCC to show the film Paperclips and her request for assistance in promoting the event to students in the village. Chair Pulido discussed potentially holding a movie showing at the new community center once it opens.
    ii. A related discussion ensued to have the Holocaust Impact Theater performers do a short excerpt of the play at the Village annual picnic, introduced by Ruth Gordon. This would double as great promotion for the play which will take place a week or two later. Ms. Quick will discuss with Ms. Gordon and connect her with Ms. Carmona.

7. Recommendations to Council
    a. None

8. List of Discussion Items for Next Meeting

a. Ms. Loring will email the Village Clerk to propose agenda items for the next meeting.

9. Next Meeting Date and Time
    a. January 27, 2025, at 6:30 pm

10. Adjournment
    a. Meeting adjourned at 8:01pm

AGENDA ITEM NO. 8.C

Item Cover Page

REGULAR COUNCIL AGENDA ITEM REPORT

DATE:	March 2, 2026
SUBMITTED BY:	Missy Arocha, Village Clerk's Office
ITEM TYPE:	Minutes
AGENDA SECTION:	BOARD AND COMMITTEE REPORTS
SUBJECT:	Parks & Recreation Committee Meeting (September 4, 2025)
SUGGESTED ACTION:	

ATTACHMENTS:
Minutes-PRCO-2025-09-04

Parks & Recreation Committee Meeting

Tuesday, Sept. 4, 2025 - 7 p.m.

Minutes

1. Call to order & roll call
   Committee Members in attendance
   Leo Hines, Chair
   Sheila Frazier, Secretary
   David Greenwell
   Marc Levy
   Others
   Fanny Lennon, Parks & Rec Director
   Patrick Fiori, Council Liaison
   Marsha Betson, " Representative
   Christina Cotto, Staff Agents
   Rick Cotto, Resident observer
2. Public Comments
   None
3. Approval of minutes
   a. Thursday, June 5, 2025 - Approved
4. Old Business
   a. Update on Orchid Projects #5,000 spent on 200 plants for Thatch, Village Hall & Coral Reef Park mounted by Fairchild team. Should be completed by 12/25.
   b. Online payments & registration for parks activities are in progress
   c. Parks Dept. Capital items:
      1. Veterans Park - DEP permit submitted, Gold Star Memorial approved
      2. The Woods - extension approved to 7/31/26
      3. Palmetto Bay Park soccer fields done
      4. State Park design meeting 9/10
      5. Boat dock in permitting phase
      6. Better WIFI in Palmetto Bay Park got more bandwidth.

7. Status on brick pavers project:
11 sold @ $100 each

5. Discussion of Agenda Items
a. Christine Cotto of the Village's Grant Dept briefed Committee on $200,000 grant request + Village matching which requires Village approval for addition of basketball courts & improvement of softball fields, playground & storage

6. New Business

7. Request

8. Selection ...
a. Next meeting Thursday, Nov 6, 2025 @ 7p.m.

9. Adjournment 8:01 p.m.

Parks & Recreation
Committee Meeting

Thursday Nov. 6, 2025 - 7 p.m.

1. Usual Heading
2. " "
3. Approval of minutes
   a. Sept. 4, 2025
4. Old Business
   1. Vote on 1 Hall of Fame candidate submitted
   2. Update Pickleball facility
5. - 9. Usual Headings

AGENDA ITEM NO. 8.D

Item Cover Page

REGULAR COUNCIL AGENDA ITEM REPORT

DATE:	March 2, 2026
SUBMITTED BY:	Missy Arocha, Village Clerk's Office
ITEM TYPE:	Minutes
AGENDA SECTION:	BOARD AND COMMITTEE REPORTS
SUBJECT:	Youth Community Involvement Task Force (November 21, 2025)
SUGGESTED ACTION:	

ATTACHMENTS:
Minutes-YCITF-2025-11-21

Meeting Minutes - Palmetto Bay YCITF

November 21, 2025

Meeting called to begin: 4:08 PM

- Roll call and opening remarks
- **Approval of Minutes:** Granted at 4:09
- **Public Comments**: N/A
- **Discussion Items:**
    a. **Toy Drive**
        i. Boxes will be placed at Cutler Bay Solar Solutions, Palmetto Bay Village, and potentially Palmetto Bay Library
        ii. Members are required to bring a toy to the December 12th meeting
        iii. Toys being delivered to Nicklaus Children's hospital by toy drive group on December 14th between 9 AM and 3 PM (time TBD)
    b. **Green Roof Initiative**
        i. Currently working on script-writing and talking to the Village Manager to get on the news
        ii. Scheduled to finish by March
    c. **Little Library**
        i. Working with Girl/Boy Scouts
        ii. Fundraising: Late November - Early January
            1. Lemonade stand at Coral Reef Park Farmers Market
            2. Hot cocoa and christmas cookie sales at Light Up Your Holiday event
        iii. Building: Mid-late January; Decorating: February 21st
        iv. Installation: March 6th
    d. **Teen Talks:** Self Defense
        i. Scheduled for January-February with the Palmetto Bay Police Department
- **Old Business:** N/A
- **New Business:**
    a. **Volunteers for Village Events**
        i. Light Up Your Holiday: December 6th at 5:00 PM for set up, arts and crafts station, santa's letters station
        ii. Coral Reef Building Event
        iii. State of the Village Address
    b. **Dog Adoption Video Series:** features "get-to-know-me" style videos about dogs in shelters in the area to promote adoption and give visibility to shelters
        i. Reach out to shelter to plan filming/volunteering dates
- **Meeting Adjourned:** 4:50 PM

AGENDA ITEM NO. 11.A

Item Cover Page

REGULAR COUNCIL AGENDA ITEM REPORT

DATE:	March 2, 2026
SUBMITTED BY:	Missy Arocha, Village Council
ITEM TYPE:	Ordinance
AGENDA SECTION:	ORDINANCES FOR FIRST READING WITH PUBLIC COMMENTS
SUBJECT:	AN ORDINANCE OF THE MAYOR AND VILLAGE COUNCIL OF THE VILLAGE OF PALMETTO BAY, FLORIDA, REGARDING COUNCIL COMMITTEES; AMENDING THE CODE OF ORDINANCES OF THE VILLAGE OF PALMETTO BAY AT SECTION 2-46, "COMMITTEES," TO REVISE AND AMEND PROVISIONS RELATING TO THE ESTABLISHMENT, COMPOSITION, DUTIES, AND PROCEDURES OF COUNCIL COMMITTEES; PROVIDING FOR CODIFICATION; SEVERABILITY; AND AN EFFECTIVE DATE. *(Sponsored by Councilmember Marsha Matson and Co-Sponsored by Village Clerk Missy Arocha)*
SUGGESTED ACTION:	

ATTACHMENTS:

Ord-Revising Committees Code Section

ORDINANCE 2026-___

AN ORDINANCE OF THE MAYOR AND VILLAGE COUNCIL OF THE VILLAGE OF PALMETTO BAY, FLORIDA, REGARDING COUNCIL COMMITTEES; AMENDING THE CODE OF ORDINANCES OF THE VILLAGE OF PALMETTO BAY AT SECTION 2-46, "COMMITTEES," TO REVISE AND AMEND PROVISIONS RELATING TO THE ESTABLISHMENT, COMPOSITION, DUTIES, AND PROCEDURES OF COUNCIL COMMITTEES; PROVIDING FOR CODIFICATION; SEVERABILITY; AND AN EFFECTIVE DATE. *(Sponsored by Councilmember Marsha Matson and Co-Sponsored by Village Clerk Missy Arocha)*

WHEREAS, the Village Council of the Village of Palmetto Bay has established advisory boards and committees to assist the Council by providing research, recommendations, and community input on matters of public interest; and

WHEREAS, Section 2-46 of the Village Code of Ordinances currently governs Council committees; and

WHEREAS, the Village Council desires to modernize, revise, and amend provisions relating to Council committees to ensure consistency, transparency, and operational efficiency; and

WHEREAS, the Village Council finds that updating these provisions serves a valid public purpose, promotes good governance, and is in the best interest of the Village and its residents.

NOW, THEREFORE, BE IT ENACTED BY THE MAYOR AND VILLAGE COUNCIL OF THE VILLAGE OF PALMETTO BAY, FLORIDA, AS FOLLOWS:

Section 1. Incorporation of Recitals. The above recitals are true and correct and incorporated as if set forth in full.

Section 2. Amendments to the Code.

Section 2-46 "Committees" of the Village Code of Ordinance is hereby amended to read as follows:

Additions shown by underlining and deletions shown by ~~overstriking~~.

Chapter 2 – Administration
Article II – Council

Division 2 – Meetings

Section 2-49 – Committees.

(e) ~~*Village heritage* committee.~~

~~(1) Mission: To explore the heritage and history of the village and advise on how to best incorporate this history and heritage into village events.~~

~~(2) Advisory scope to review the following:~~

~~a. To report, no later than the regular village council meeting on the first Monday of July 2022, on how the village should incorporate the history and heritage of the village into the village's 20th year anniversary~~

~~(3) Notwithstanding any other provision of this chapter, the committee shall consist of five members, one each appointed by each member of the village council, and the chairperson and secretary of the committee shall be elected by the committee members.~~

~~(4) Notwithstanding any other provision of this chapter, committee members may simultaneously serve on any other village advisory committee.~~

~~(5) The committee shall cease to exist immediately following their post celebration assessment meeting following the anniversary celebration to make observations and assess outcomes for the permanence of the event.~~

* * *

Chapter 2 – Administration

Article II – Council

Division 3 – Advisory Boards or Committees

Section 2-55 – Boards and committees and missions and scopes identified.

The following boards and committees are hereby created, with the corresponding objectives:

(1) Parks and Recreation Committee.

a). Mission/Purpose: To provide recommendations to the village council in matters of village parks and recreation levels of service; and to provide recommendations to the village council in matters of community engagement and public awareness.

b). Advisory scope: To review the following:

i. State of the parks' structures.
ii. State of the parks' recreational facilities.
iii. Recreational programming and fees.
iv. Parks accessibility.
v. Parks safety.

~~c). Notwithstanding any other provision of this Ordinance, all members of the Parks and Recreation Committee and all members of the Community Outreach Committee on the effective date of this amendment are automatically members of the Parks and Recreation and Community Outreach Committee. Membership shall be reduced to the otherwise authorized number for a member through attrition and expiration of membership.~~

(2) Resiliency Committee.

a). Mission/Purpose: To identify, study, and recommend policies and programs that strengthen the Village's sustainability and resiliency and to develop a report that identifies short, mid and long-term projects to reach that goal. The committee is to address matters such as sea level rise, drinking water, canals, stormwater, coastal ecology, architecture mitigation, septic to sewer, flood mitigation, natural habitats, and the preservation of Biscayne Bay.

b). Advisory Scope: To review the following:

i. identify, study, and recommend policies and programs that strengthen the Village's sustainability and resiliency

ii. to develop a committee report that identifies short-term, medium-term, and long-term projects that will make the Village a more sustainable and resilient municipality

iii. prioritizing natural and/or structural improvements within the Village

* * *

Chapter 2 – Administration

Article II – Council

Division 3 – Advisory Boards or Committees

Section 2-57 – Membership Appointment.

(b) The village council shall appoint a non-voting council liaison to each board or committee via Resolution. Administration shall appoint a non-voting staff representative to each board or committee at the discretion of the Village Manager. The mayor shall be a non-voting honorary liaison to each board or committee. Council liaisons are not members of the committee and shall participate on the same status and terms as members of the public. The duties of the council liaison are as follows:

(1) The council liaison is the intermediary between the council and the committee.

(2) The council liaison should regularly attend his or her assigned committee meeting to strengthen the relationship between it and the council.

(3) The council liaison makes sure the committee has the information it needs to function accordingly.

(c) The council must, by Ordinance, specify any additional structures or procedures for the advisory committees and boards covered by this chapter, including increasing the size and specifying the method of appointment for additional members.

(d) ~~It is recommended that a~~A councilmember ~~does not~~ shall not appoint an individual to a board or committee who already serves on one or more boards or committees.

* * *

Chapter 2 – Administration

Article II – Council

Division 3 – Advisory Boards or Committees

Section 2-65 – Agenda

(b) The agenda format for all subsequent meeting, within ~~three~~ ten business days after the conclusion of an advisory board or committee meeting, the chairperson or secretary of the board or committee shall submit to the village clerk the meeting minutes and the next meeting agenda as prepared by the chair.

* * *

Chapter 2 – Administration

Article II – Council

Division 3 – Advisory Boards or Committees

Section 2-67 – Voting

Each committee member shall be entitled to one vote on matters coming before the committee. The committee shall act as a body in making its decisions. No member present at a meeting may abstain from voting except in cases of conflict of interest, as provided in Florida Statues and the Miami-Dade County Code of Ethics. A member must be present to vote. Proxy votes shall not be permitted. Remote attendance shall not be allowed by advisory board or committee members.

* * *

Chapter 2 – Administration

Article II – Council

Division 3 – Advisory Boards or Committees

Section 2-70 – Records.

a) Minutes of all committee meetings shall be recorded by secretary and shall be available for public inspection. The secretary shall forward all approved minutes to the village clerk's office within ~~three~~ ten business days following the meeting. Once approved, the village clerk shall archive all meeting minutes and post same on the village's website until at least three months post sunsetting the board or committee. If the recording Secretary is absent, the members of the advisory board or committee who are present shall select an interim Recording Secretary to prepare the minutes.

~~b) Live streaming and a video recording of each board or committee meeting shall be taken. The village manager shall publish the video recording on the village website within 24 hours of each meeting.~~ A video recording of the meeting shall be made available for public inspection and maintained by the Village in accordance with applicable public records requirements.

c) Board or committee members shall receive notification of village activities and events through the village's online newsletter (Village@Work) via email sent by the village manager.

Section 3. Repeal of Conflicting Provisions. The provisions of the Village Code and all Ordinances or parts of Ordinances in conflict with the provisions of this Ordinance are hereby repealed.

Section 4. Severability. The provisions of this Ordinance are declared to be severable, and if any sentence, section, clause, or phrase of this Ordinance shall, for any reason, be held to be invalid or unconstitutional, such decision shall not affect the validity of the remaining sentences, sections, clauses, or phrases of the Ordinance, but they shall remain in effect it being the legislative intent that this Ordinance shall stand notwithstanding the invalidity of any part.

Section 5. Codification. It is the intention of the Village Council, and it is hereby ordained the provisions of this Ordinance shall become and be made part of the Code of Ordinances of the Village of Palmetto Bay, Florida, that sections of this Ordinance may be renumbered or re-lettered to accomplish such intentions, and that the word "Ordinance" shall be changed to "Section" or other appropriate word.

Section 6. Effective Date. This Ordinance shall take effect immediately upon enactment at Second Reading.

PASSED ON FIRST READING this 2nd day of March, 2026.

PASSED AND ADOPTED ON SECOND READING this ____ day of _____, 2026.

Attest: _____ _____

Missy Arocha	**Karyn Cunningham**
Village Clerk	**Mayor**

APPROVED AS TO FORM AND LEGAL SUFFICIENCY
FOR THE SOLE USE AND BENEFIT OF THE VILLAGE:

_____

John J. Quick
Village Attorney

VOTE ON FIRST READING:

Mayor Karyn Cunningham ___

Council Member Steven Cody ___

Council Member Marsha Matson ___

Vice-Mayor Mark Merwitzer ___

Council Member Patrick Fiore ___

FINAL VOTE AT ADOPTION ON SECOND READING:

Mayor Karyn Cunningham ___

Council Member Steven Cody ___

Council Member Marsha Matson ___

Vice-Mayor Mark Merwitzer ___

Council Member Patrick Fiore ___

Additions shown by underlining and deletions shown by ~~overstriking~~.

AGENDA ITEM NO. 12.A

Item Cover Page

REGULAR COUNCIL AGENDA ITEM REPORT

DATE:	March 2, 2026
SUBMITTED BY:	Christina Cotto, Grants
ITEM TYPE:	Resolution
AGENDA SECTION:	CONSENT AGENDA
SUBJECT:	A RESOLUTION OF THE MAYOR AND VILLAGE COUNCIL OF THE VILLAGE OF PALMETTO BAY, FLORIDA, RATIFYING RESOLUTION NO. 2015-31, APPROVING THE VILLAGE OF PALMETTO BAY TITLE VI NON-DISCRIMINATION POLICY AND PLAN FOR THE PURPOSE OF ENSURING COMPLIANCE WITH TITLE VI OF THE CIVIL RIGHTS ACT OF 1964; AND PROVIDING FOR AN EFFECTIVE DATE.*(Sponsored by Administration and Prepared by Grants Administrator, Christina Cotto, and Public Services Director, Dionisio Torres)*
SUGGESTED ACTION:	

ATTACHMENTS:

Reso-Title-VI
Reso 2015-31
Memo-Title VI
Title VI Program Policy

RESOLUTION NO. 2026-_____

A RESOLUTION OF THE MAYOR AND VILLAGE COUNCIL OF THE VILLAGE OF PALMETTO BAY, FLORIDA, RATIFYING RESOLUTION NO. 2015-31, APPROVING THE VILLAGE OF PALMETTO BAY TITLE VI NON-DISCRIMINATION POLICY AND PLAN FOR THE PURPOSE OF ENSURING COMPLIANCE WITH TITLE VI OF THE CIVIL RIGHTS ACT OF 1964; AND PROVIDING FOR AN EFFECTIVE DATE. *(Sponsored by Administration and Prepared by Grants Administrator, Christina Cotto, and Public Services Director, Dionisio Torres)*

WHEREAS, the Village of Palmetto Bay is a sub-recipient of Federal Transportation Administration (FTA) funding; and,

WHEREAS, as a condition of funding, the FTA requires that all sub-recipients establish and maintain policies ensuring compliance with Title VI of the Civil Rights Act of 1964; and,

WHEREAS, the Village Council previously approved the Village's Title VI Nondiscrimination Policy and Plan ("Policy Plan") via Resolution No. 2015-31, and such approval must be updated regularly; and,

WHEREAS, in accordance with FTA policy, the Village's Policy Plan was created to ensure that no person "shall, on the grounds of race, color or national origin, be excluded from, participation in, or be denied the benefits of, or be subjected to discrimination under any program or activity receiving Federal financial assistance"; and

WHEREAS, no changes have been made to the Village's existing Policy Plan, and the Village desires to approve the document as required by FTA legislation.

NOW THEREFORE, BE IT RESOLVED BY THE MAYOR AND VILLAGE COUNCIL OF THE VILLAGE OF PALMETTO BAY, FLORIDA, AS FOLLOWS:

Section 1. The Village Council hereby approves the Village of Palmetto Bay Title VI Non-discrimination Policy and Plan.

Section 2. This Resolution shall take effect immediately upon passage.

PASSED and **ADOPTED** this 2nd day of March, 2026.

Attest:

_____	_____
Missy Arocha	**Karyn Cunningham**
Village Clerk	**Mayor**

APPROVED AS TO FORM AND LEGAL SUFFICIENCY:

_____
John J. Quick
Village Attorney

FINAL VOTE AT ADOPTION:

Council Member Patrick Fiore _____

Council Member Steve Cody _____

Council Member Marsha Matson _____

Vice-Mayor Mark Merwitzer _____

Mayor Karyn Cunningham _____

RESOLUTION NO. 2015-31

A RESOLUTION OF THE MAYOR AND VILLAGE COUNCIL OF THE VILLAGE OF PALMETTO BAY, FLORIDA, APPROVING A TITLE VI PROGRAM POLICY FOR THE PURPOSE OF ENSURING COMPLIANCE WITH TITLE VI OF THE CIVIL RIGHTS ACT PURSUANT TO THE CIVIL RIGHTS ACT OF 1964 AND THE CIVIL RIGHTS RESTORATION ACT OF 1987; APPROVING THE ASSOCIATED LIMITED ENGLISH PROFICIENCY PLAN; AND FURTHER AUTHORIZING THE VILLAGE MANAGER TO SUBMIT THE POLICY DOCUMENTS TO MIAMI-DADE TRANSIT AUTHORITY FOR INCLUSION IN THEIR TITLE VI PROGRAM ON BEHALF OF THE VILLAGE OF PALMETTO BAY; AND PROVIDING FOR AN EFFECTIVE DATE. (Administration)

WHEREAS, the Village of Palmetto Bay is a sub-recipient of Federal Transportation Administration funding through Miami-Dade Transit Authority (MDTA); and

WHEREAS, Title VI documents are required to be in compliance with the Civil Rights Act of 1964; and

WHEREAS, staff created a Title VI Program Policy in accordance with Circular C 4702.1B ensuring protection of people from discrimination based on race, color or national origin in programs or activities that receive federal financial assistance; and

WHEREAS, the draft documents were reviewed by MDTA for completeness and found to be complete and ready for submittal; and

WHEREAS, the Program documents must be approved by the Village Council of the sub-recipient and submitted to the MDTA for inclusion in their Title VI Program;

NOW, THEREFORE, BE IT RESOLVED BY THE MAYOR AND VILLAGE COUNCIL OF THE VILLAGE OF PALMETTO BAY, FLORIDA, AS FOLLOWS:

Section 1: The Village Council hereby accepts the Title VI Program and authorizes the Village Manager to submit the Program documents to Miami-Dade County Transit Authority for inclusion in their Title VI Program.

Section 2: This resolution shall take effect immediately upon approval.

PASSED and **ADOPTED** this 2nd day of March 2015.

Attest:

Meighan J. Alexander
Village Clerk

Eugene Flinn
Mayor

APPROVED AS TO FORM AND LEGAL SUFFICIENCY FOR THE USE AND RELIANCE OF THE VILLAGE OF PALMETTO BAY, FLORIDA ONLY:

Dexter W. Lehtinen
Village Attorney

FINAL VOTE AT ADOPTION:

Council Member Karyn Cunningham	YES
Council Member Tim Schaffer	YES
Council Member Larissa Siegel Lara	YES
Vice-Mayor John DuBois	YES
Mayor Eugene Flinn	YES

To: Honorable Mayor and Village Council

Date: March 2, 2026

From: Nick Marano, Village Manager

Re: Title VI Non-Discrimination Policy

A RESOLUTION OF THE MAYOR AND VILLAGE COUNCIL OF THE VILLAGE OF PALMETTO BAY, FLORIDA, RATIFYING RESOLUTION NO. 2015-31, APPROVING THE VILLAGE OF PALMETTO BAY TITLE VI NON-DISCRIMINATION POLICY AND PLAN FOR THE PURPOSE OF ENSURING COMPLIANCE WITH TITLE VI OF THE CIVIL RIGHTS ACT OF 1964; AND PROVIDING FOR AN EFFECTIVE DATE. *(Sponsored by Administration and Prepared by Grants Administrator, Christina Cotto, and Public Services Director, Dionisio Torres)*

BACKGROUND AND ANALYSIS:

The Village of Palmetto Bay originally accepted the Title VI Program Policy via Resolution No. 2015-31. As a sub-recipient of Federal Transportation Administration (FTA) funding, the FTA requires governing agencies benefitting through use of funds to have a Title VI Program Plan and Resolution updated every three years. Administration reviewed the Village's Title VI Program Policy to ensure compliance with Title VI of the Civil Rights Act of 1964 and the Civil Rights Restoration Act of 1987. The review ensures no person shall, on the grounds of race, color or national origin, be excluded from, participation in, or be denied the benefits of, or be subjected to discrimination under any program or activity receiving Federal financial assistance.

FISCAL IMPACT:

None.

ATTACHMENTS:

A. Resolution No. 2015-31
B. Title VI Program Policy

VILLAGE OF PALMETTO BAY

Title VI/Nondiscrimination Policy and Plan

Revised February 2026

Village of Palmetto Bay
Public Services Department
9495 SW 180th Street, Palmetto Bay, FL 33157
Tel: 305-969-5011 / Fax: 305-969-5091
Website: www.palmettobay-fl.gov

Table of Contents

I. Village's Policy Statement 2

i. Guideline 2

ii. Procedure 2

iii. Background 2

iv. Statutory Authorities 3

II. Title VI Notice to the Public 3

III. Title VI Definitions 3

IV. Title VI Complaint Procedure and Complaint Form 4

V. Subcontractors and Vendors 5

VI. Record Keeping of Investigations, Complains, or Lawsuits 5

VII. Website Location of Title VI Notice, Procedure, and Form 6

VIII. Limited English Proficiency (LEP) Analysis 6

IX. Public Participation / Outreach Plan 7

X. Employee Education 7

XI. Language Assistance Plan 7

APPENDIX A 8

APPENDIX B 9

APPENDIX C 10

APPENDIX D 11

Sistema de Circulación 12

APPENDIX E 13

APPENDIX F 17

APPENDIX G 18

APPENDIX H 19

APPENDIX I 20

APPENDIX J 24

INTRODUCTION 25

DEMOGRAPHIC INFORMATION 25

I. Village's Policy Statement

Title VI of the Civil Rights Act of 1964 prohibits discrimination on the basis of race, color, or national origin in programs and activities receiving Federal financial assistance. Specifically, Title VI provides that "no person in the United States shall, on the ground of race, color, or national origin, be excluded from participation in, be denied the benefits of, or be subjected to discrimination under any program or activity receiving Federal financial assistance" (42 U.S.C. Section 2000d).

The Village of Palmetto Bay values diversity and welcomes input from all interested parties, regardless of cultural identity, background or income level. Moreover, the Village believes that the best programs and services result from careful consideration of the needs of all of its communities and when those communities are involved in the transportation decision making process. Thus, county/city does not tolerate discrimination in any of its programs, services or activities. Pursuant to Title VI of the Civil Rights Act of 1964 and other federal and state authorities, the county/city will not exclude from participation in, deny the benefits of, or subject to discrimination anyone on the grounds of race, color, national origin, sex, age, disability, religion, income or family status.

This plan was developed to guide the Village of Palmetto Bay in its administration and management of Title VI-related activities.

i. Guideline

A. Nondiscrimination programs require that Federal-aid recipients, sub -recipients, and contractors prevent discrimination and ensure nondiscrimination in all of their programs and activities, whether those program s and activities are federally-funded or not.
    1. If a unit of a State or local government is extended Federal-aid and distributes such aid to another governmental entity, all of the operations of the recipient and sub-recipient are covered.
    2. Corporations, partnerships, or other private organizations or sole proprietorships covered in their entirety if such entity received Federal financial assistance (FHWA Notice N 4720.6, September 2, 1992).
B. The Village of Palmetto Bay as a recipient of federal financial assistance will ensure full compliance with Title VI of the Civil Rights Act of 1964.

ii. Procedure

Any person who believes that he or she has, individually, or as a member of any specific class of persons, been subjected to discrimination on the basis of race, color, national origin, sex, age, handicap/disability, income, religion, or family status may file a confidential Title VI complaint with the Village of Palmetto Bay. Any and all complaints related to this policy should be forwarded to the Office of the Village Manager or his designee charged with the overall responsibility for the administration of this policy 9705 E. Hibiscus Street, Palmetto Bay, FL 33157.

iii. Background

Title VI of the Civil Rights Act of 1964, as amended, provides that no person shall on the grounds of race, color, national origin, sex, age, handicap/disability, income, religion, or family status, be excluded from participation in, be denied the benefits of, or be subjected to discrimination under any program or activity receiving Federal financial assistance. The Civil Rights Restoration Act of 1987 amended Title VI to specify that entire institutions receiving Federal funds-whether schools and colleges, government entities, or private employers -must comply with Federal civil rights laws, rather than just the particular programs or activities that receive the funds.

iv. Statutory Authorities

Title VI of the Civil Rights Act of 1964, The Civil Rights Restoration Act of 1987, Executive Order 12250, Executive Order 12898 (Environmental Justice), Executive Order 13166 (Limited English Proficiency), 49 CFR Part 21 and 23 CFR Part 200.

Any questions regarding this policy should be directed to:
Village of Palmetto Bay, Office of the Village Manager, 9705 E. Hibiscus Street, Palmetto Bay, FL 33157, Telephone: (305) 259-1234 Fax: (305) 259-1290.

II. Title VI Notice to the Public

The Village of Palmetto Bay maintains a proactive, interdisciplinary approach to Title VI, requiring that decision makers of the Village fully implement Title VI in all business decisions. The Village has adopted a "Notice of Rights under Title VI of the Civil Rights Act of 1964" in connection with all services provided. The notice is posted on the Village's website: palmettobay-fl.gov in English and Spanish. The notice contains a telephone number for individuals to contact if he/she needs information in another language. A copy of the notice is attached as (**Appendix A**).

In addition to the website, the notice is prominently and publicly displayed in each public transit vehicle and in all Village owned facilities and each office where Title VI is applicable. An individual may also request a copy of the notice from the Office of the Village Manager. Additional information relating to the Village's nondiscrimination obligation is provided in this document.

Further information can be obtained directly from the designated Title VI representative from the Office of the Public Services.

Dionisio Torres
Title VI Coordinator
9495 SW 180th Street
Palmetto Bay, Florida 33157
Telephone: (305) 969-5011 Fax: (305) 259-1290

III. Title VI Definitions

Title VI requires that all FL/DOT programs; benefits, activities and services occur without discrimination based on race, color, national origin, or sex and with active inclusion of protected class persons. (The term benefit includes doing business with FL/DOT and encompasses all FL/DOT contracting and purchasing.).

> ***TITLE VI:*** *"No person in the United States shall, on the ground of race, color, or national origin, be excluded from participation in, be denied the benefits of, or be otherwise subjected to discrimination under any program or activity receiving Federal financial assistance."* ***Section 601 of the Civil Rights Act of 1964***

Simple Justice requires that public funds to which all taxpayers of all races contributes, not be spent in any fashion which encourages, entrenches, subsidizes, or results in racial discrimination.

President John F. Kennedy

Also, a part of Title VI is:

Environmental Justice – Each Agency shall make achieving environmental justice part of its mission by identifying and addressing, as appropriate, disproportionately high and adverse human health or environmental effects of its programs, policies, and activities on minority and low-income populations."
Executive Order 12898

Limited English Proficiency (LEP) – Each agency shall prepare a plan to improve access to its federally conducted programs and activities by eligible LEP persons. Each plan shall include the steps the agency will take to ensure that eligible LEP persons can meaningfully access the agency's programs and activities.
Executive Order 13166

IV. Title VI Complaint Procedure and Complaint Form

The Village is committed to its Title VI Policy, and Title VI Nondiscrimination Program to ensure that no person or groups of persons shall, on the grounds of race, color, sex, age, national origin, disability, religion, or family status be excluded from participation in, be denied the benefits of, or be otherwise subjected to discrimination under any and all programs, services, or activities administered by the Village, its recipients, sub recipients and contractors. In addition, Executive Order 12898 (Environmental Justice) prohibits discrimination based on income status.

If an individual believes he or she has been discriminated against on the basis of race, color or national origin in connection with the Village's circulator service, the individual may file a complaint by completing and submitting a Title VI Complaint Form to the Office of the Village Manager no later than 180 days after the date of the alleged discrimination. Each complaint should include the following information:

a. Full name
b. Mailing address
c. Contact information (i.e., telephone number, email address, etc.)
d. How, when, where, and why you believe you were discriminated against, including location, names, and contact information of any witnesses
e. Other information that you consider significant

All complaints will be handled in accordance with the Village's Title VI Complaint Procedure.

Also included in this Plan **is the Village's Title VI Complaint Procedure** which outlines the process to follow for any individual or group that may feel that they have been denied the benefits of, or otherwise subjected to discrimination under any and all programs, services, or activities administered by Village, its recipients, sub-recipients and contractors. It also explains the Village's authority and responsibilities in regard to responding to and acting upon their complaint. This document also describes enforcement procedures to be followed by the FHWA in the event of the Village's noncompliance with Title VI.

There is a form that the Village utilizes to document any complaints in regard to Title VI – the **Village of Palmetto Bay Title VI Complaint Form**. The Complaint Procedure and Complaint Form are available on the Village's website

and upon request from the Office of the Village Manager. The Complaint Form is a .pdf file that can be printed and submitted via email, fax, mail, or in person to the Office of the Village Manager. Complaints will be forwarded to and shared with FDOT and/or FHWA, who on assisted projects can accept, investigate and issue findings under Title VI which is specific to the classes race, color and national origin.

Additionally, the Village shall make every effort to address all complaints in an expeditious and thorough manner. A letter acknowledging receipt of complaint will be mailed within seven days (see **Appendix F**). Please note that in responding to any requests for additional information, a complainant's failure to provide the requested information may result in the administrative closure of the complaint.

The Village of Palmetto Bay will send a final written response letter (see **Appendix G**) to the complainant that complaint is substantiated. If the complaint is found to be not substantiated (see **Appendix H**), the complainant is also advised of his or her right to:

a. Appeal within seven (7) calendar days of receipt of the final written decision from the Village, and/or
b. File a complaint externally with the U.S. Department of Transportation and/or the FTA.

Every effort will be made to respond to Title VI complaints within 60 working days of receipt of such complaints, if not sooner.

Once sufficient information for investigating the complaint is received by the Village, a written response will be drafted subject to review by the Village Attorney. If appropriate, the Village Attorney may administratively close the complaint. In this case, the Village will notify the complainant of the action as soon as possible.

The Complaint Procedure and Complaint Form contain a telephone number for an individual to contact if he/she needs the information in another language. A copy of the Complaint Procedure is attached as (**Appendix D**), and a copy of the Complaint Form is attached as (**Appendix E**).

V. Subcontractors and Vendors

All subcontractors and vendors who receive payments from the Village of Palmetto where funding originates from any federal assistance are subject to the provisions of Title VI of the Civil Rights Act of 1964 as amended.

Written contracts shall contain non-discrimination language, either directly or through the bid specification package which becomes a component of the contract.

VI. Record Keeping of Investigations, Complains, or Lawsuits

The Village of Palmetto Bay maintains a log of Title VI investigations, complaints, and lawsuits. A copy of the log (as of December 10, 2021) is attached in (**Appendix I**). The Village Attorney's Office shall be responsible for investigating and completing the log for any future complaints received regarding Title VI complaints and for any future formal administrative charges or lawsuits under Title VI.

VII. Website Location of Title VI Notice, Procedure, and Form

An individual may locate information about the Village's Non-Discrimination policy, Title VI Notice, Complaint Procedure, and Complaint Form for all applicable programs and services on the Village's website (www.palmettobay-fl.gov).

VIII. Limited English Proficiency (LEP) Analysis

The Village of Palmetto Bay is located in Miami-Dade County, Florida. According to the United States Census Bureau, the village has a total area of 8.8 square miles (22.6 km^2). 8.8 square miles (22.5 km^2) of it is land and 1.4 Square miles (0.1 km^2) of it (0.44%) is mostly water. As of the census of 2010 with population estimates of 2019, the Village's estimated total population was 24,523 residents, 7,923 households, and 6,537 families residing in the village(suburbanstats.org). There were 8,145 housing units at an average density of 925.6 per square mile (360.4/km^2). The racial makeup of the village was 86.5% White (Non-Hispanic White 42.1%), 3.7% African American, 0.12% Native American, 4.8% Asian, 0.1% Pacific Islander, 2.2% from other races, and 3.0% from two or more races.

The principal languages among the Village's residents are English and Spanish. Of the Village's population 41.4% speak Spanish at home, (76.6% speak English very well and 23.4% speak English less than very well).

The Village provides information in English and in Spanish when it is requested. Residents can request translations of documents that are in English. The Village of Palmetto Bay has employees who are bilingual and are fluent in Spanish. These employees can assist any Spanish-speaking residents who call or email the office with questions or who request information concerning programs and services.

The Village uses several methods to communicate with its residents. The Village's communication tools are the Village's website, Palmetto Bay YouTube channel, local community newspapers, social media accounts (Facebook, Instagram, and X-formerly Twitter), PBConnect, and the Village of Palmetto Bay Village Vibes E-Newsletter.

The Village Title VI Policy and Complaint Procedures is hosted on the Village's web page in English and made available in other languages as requested.

The Village educates our staff and contractors on the following procedure:

a. Understanding the Title VI Policy and LEP responsibilities
b. How to access Title VI Policy and Procedures via the Village's website.
c. Document and resolve any language assistance deficiencies
d. The procedure if a Title VI and/or LEP complaint is filed.

The Village will review LEP procedures annually to determine if modifications are needed to meet language assistance deficiencies.

IX. Public Participation / Outreach Plan

The Village of Palmetto Bay seeks to engage the public in its planning and decision-making processes. Members of the public may make statements at Commission meetings during the "Public Hearing" portion of any Village Council meeting.

The Council meetings occur the first Monday of every month except for August whereas no meetings are scheduled during this month. Village Commission agendas are available for review by the public no less than seven (7) days before Commission meetings. Notices of resolutions or ordinances under Commission consideration are available on the Village's website www.palmettobay-fl.gov. If any individual wishes to speak during the Public Hearing portion of a Commission meeting, but does not speak English fluently, he or she may contact the Village Clerk's Office at least three (3) days in advance to request a translator.

As an agency receiving federal financial assistance, we have made the following community outreach efforts:

- Website
- The Title VI plan will be located on the Village of Palmetto Bay website for review.
- All Village Council Commission meetings are open to the public and allow for public comments during the meeting.
- Site Spanish speaking individuals who can assist those persons either with information relative to program or service complaints or concerns.

Ordinances and resolutions adopted by the Village to apply for and utilize Federal and State grant funding are placed on the public hearing/meeting agenda and are subject to public notice and comment procedures.

The Village and its records are available to the public and the Village welcomes their input. The Village's Title VI Complaint Procedure is available to the public via the Village's website www.palmettobay-fl.gov

X. Employee Education

During New Employee Orientation and subsequent employee trainings, information relative to the provisions of Title VI will be reviewed and discussed.

All employees shall be provided a copy of the Title VI Plan and are required to sign the Acknowledgement of Receipt (**Appendix B and C**).

XI. Language Assistance Plan

The Village is taking responsible steps to ensure meaningful access to benefits, services, information and other important portions of its programs and activities for individuals who are Limited English Proficient. A copy of Village's Language Assistance Plan (LAP) is attached as **Appendix K**.

APPENDIX A

Notice of Rights under Title VI of the Civil Rights Act of 1964

The Village of Palmetto Bay is committed to ensuring that no person is excluded from participation in, or denied benefits on the basis of race, color, or national origin in accordance with Title VI of the Civil Rights Act of 1 964. Any person who believes he or she has been subjected to discrimination under Title VI may file a written complaint with the Village of Palmetto Bay.

For more information on the procedure to file a complaint, contact 305-259-1234, visit the Village's website: www.palmettobay-fl.gov, or visit the Public Services administrative office at 9495 SW 180TH Street, Palmetto Bay, Florida 33157 or the Office of the Village Manager at 9705 E. Hibiscus Street, Palmetto Bay, Florida 33157.

An individual may also file a complaint directly with the Florida Department of Transportation (FDOT). FDOT will serve as a clearing house, forwarding the complaint to the appropriate state or federal agency:

Florida Department of Transportation
Equal Opportunity Office
ATTN: Title VI Complaint Processing 605
Suwannee Street MS 65
Tallahassee, FL 32399

If information is needed in another language, please contact 305-259-1234.

Notificación de Derechos bajo el Titulo VI de la Ley de Derechos Civiles del 1964

La ciudad de Palmetto Bay se compromete a garantizar que ninguna persona sea excluida de la participación, o negada beneficios de su programa circulador IBUS en base a raza, color u origen nacional de acuerdo con el Título VI de la Ley de Derechos Civiles del 1964. Cualquier persona que cree que él o ella ha sido sometida a discriminación bajo el Título VI puede presentar una queja por escrito con la cuidad de Palmetto Bay.

Para más información sobre el procedimiento para presentar una queja, póngase en contacto con 305-259-1234, visite el sitio web de la cuidad: www.palmettobay-fl.gov, ó visite la oficina administrativa de Obras Públicas al 9495 SW 180 Street, Palmetto Bay, Florida 33157, ó la oficina del Gerente de la cuidad, 9705 E. Hibiscus Street, Palmetto Bay, Florida 33157.

Un individuo también puede presentar una queja directamente ante la Administración Federal de Tránsito mediante la presentación de una queja por escrito con la oficina de Derechos Civiles, Atención: Coordinador del Programa Título VI, East Building, 5th Floor-TC R, 1200 New Jersey Avenue SE, Washington, DC 20590.

Si necesita información en otro idioma, por favor póngase en contacto con 305-259-1234.

APPENDIX B

Employee Education Form Title VI Policy

No person shall, on the grounds of race, color or national origin, be excluded from participation in, be denied the benefits of, or be subjected to discrimination under any program or activity receiving federal financial assistance.

All employees of the Village of Palmetto Bay are expected to consider, respect, and observe this policy in their daily work and duties. If a citizen approaches you with a question or complaint, direct him or her to the Office of the Village Manager and Director of Public Works for the Village of Palmetto Bay.

APPENDIX C

Acknowledgement of Receipt of Title VI Plan

I hereby acknowledge the receipt of the Village of Palmetto Bay Title VI Plan. I have read the plan and am committed to ensuring that pursuant to Title VI of the Civil Rights Act of 1964 and other federal and state authorities, the county/city will not exclude from participation in, deny the benefits of, or subject to discrimination anyone on the grounds of race, color, national origin, sex, age, disability, religion, income or family status of Village programs and activities, whether those program s and activities are federally-funded or not.

_____

Your signature

_____

Print your name

_____

Date

APPENDIX D

Title VI Complaint Procedure

Title VI of the 1964 Civil Rights Act requires that "No person in the United States shall, on the ground of race, color, or national origin, be excluded from participation in, be denied the benefits of, or be subjected to discrimination under any program or activity receiving federal financial assistance."

Any person who believes he or she has been discriminated against based on race, color, or national origin, sex, age, disability, religion, income or family status by the Village of Palmetto Bay may file a Title VI complaint by completing and submitting the agency's Title VI Complaint Form. A complaint may be filed no later than 180 days after the date of the alleged discrimination. The Village or its designated Title VI Coordinator will process complaints that are complete.

Once the complaint is received, the Village Manager's office will review it to determine if his office has jurisdiction. The complainant will receive an acknowledgement letter informing him/her whether the complaint will be investigated by the Office of the Village Manager.

The Village has 60 days to investigate the complaint. If more information is needed to resolve the case, the Manager's office may contact the complainant. The complainant will have 10 business days from the date of the letter to send the requested information to the investigator assigned to the case. If the investigator is not contacted by the complainant or does not receive the additional information within 10 business days, a representative of the Manager's office can administratively close the case. A case can also be administratively closed if the complainant no longer wishes to pursue their case.

After the case is investigated, he/she will issue one of two letters to the complainant: a closure letter or a letter of finding (LOF). A closure letter summarizes the allegations and states that there was not a Title VI violation and that the case will be closed. An LOF summarizes the allegations and the interviews regarding the alleged incident, and explains whether any disciplinary action, additional training of the staff member or other action will occur.

If the complainant wishes to appeal the decision, he/she has 10 business days after the date of the LOF to do so.

If information is needed in another language, please contact 305-259-1234.

Sistema de Circulación

Titulo VI Procedimiento de Quejas

Título VI de la Ley de Derechos Civiles del 1964 requiere que "ninguna persona en los Estados Unidos, por razón de raza, color u origen nacional, sexo, edad, debilitación, religión, estado financiero sea excluida de la participación, sea negada los beneficios de, o ser objeto de discriminación bajo cualquier programa o actividad recibiendo asistencia financiera federal".

Cualquier persona que cree que él o ella han sido discriminados en base a raza, color o nacionalidad de origen, sexo, edad, debilitación, religión, estado financiero, por la Ciudad de Palmetto Bay puede presentar una queja de Título VI llenando y enviando el formulario de queja de a la Agencia de Título VI. Una queja puede ser presentada a más tardar 180 días después de la fecha de la supuesta discriminación. La cuidad o su designado Coordinador del Título VI procesará las quejas que están completas.

Una vez recibida la queja, la oficina del Manager de la ciudad revisara para determinar si su oficina tiene jurisdicción. El denunciante recibirá una carta de reconocimiento la cual le informa si la queja será investigada por la oficina del director de la Ciudad.

La cuidad tiene 60 días para investigar la denuncia. Si necesita más información para resolver el caso, la oficina del administrador puede comunicarse con el demandante. El denunciante tendrá 10 días hábiles desde la fecha de la carta para enviar la información solicitada al investigador asignado al caso. Si el investigador no es contactado por el querellante o no recibe la información adicional dentro de 10 días hábiles, un representante de la oficina del gerente administrativo puede cerrar el caso. Un caso también puede ser cerrado administrativamente si el demandante ya no desea seguir su caso.

Después de que el caso es investigado emitirá uno de dos letras para el demandante: una carta de cierre o una carta de encontrar (LOF). Una carta de cierre resume las acusaciones y afirma que no hubo una violación del Título VI y que el caso será cerrado. Un LOF resume las denuncias y las entrevistas sobre el presunto incidente y explica si cualquier acción disciplinaria, entrenamiento adicional de la funcionaria u otra acción ocurrirá.

Si el demandante desea apelar la decisión, tiene 10 días hábiles después de la fecha de la LOF para hacerlo. Si necesita información en otro idioma, por favor póngase en contacto con 305-259-1234.

Una persona también puede presentar una queja directamente con: Administración Federal de tránsito dentro de 180 días del presunto incidente. La queja debe ser presentada con la oficina de derechos civiles.

APPENDIX E

Title VI Complaint Form

Note: The Village of Palmetto Bay is committed to complying with Title VI of the Civil Rights Act of 1964 which states "No person in the United States shall, on the grounds of race, color or national origin, be excluded from participation in, be denied the benefits of, or be subjected to discrimination under any program or activity receiving federal financial assistance." Two Executive Orders extend Title VI protections to Environmental Justice, which also protects persons of low income, and Limited English Proficiency (LEP).

If you need assistance in completing this form, please contact the Office of the Village Manager.

PLEASE FILL OUT COMPLETELY

SECTION I:	
Name:	
Address:	
Telephone: (Home) _____ (Work) _____ (Cell) _____	
Email Address:	
SECTION II:	
Are you filling this complaint on your own behalf? Yes*_____ No** _____	
*If you answered "Yes" to this question, go to Section III. **If you answered "No" to this question, please supply the name and relationship of the person for whom you are complaining: Name: _____ Relationship:_____	
Please explain why you have filed for a third party:	
Please confirm that you have obtained the permission of the aggrieved party, if you are filing on behalf of a third party.	Yes _____ No _____
SECTION III:	
I believe the discrimination experienced was based on (check all that apply): ( )Race ( )Color ( )National Origin ( )Sex ( )Age ( )Disability ( )Religion ( )Income or Family Based Date of alleged discrimination (month, day, year): _____	

Explain as clearly as possible what happened and why you believe you were discriminated against. Describe all persons who were involved. Include the name and contact information of the person(s) who discriminated against you (if known) as well as names and contact information of any witnesses. (If more space is needed, please use the back of this form or attach additional sheet(s).

You may attach any written materials or other Information that you think is relevant to your complaint. Signature and date required below.

_____ _____

Signature Date

Please submit this form in person at the address below, or mail this form to:

Village of Palmetto Bay
Public Services Department
9495 SW 180th Street
Palmetto Bay, FL 33157

If information is needed in another language, please contact 305-259-1234

Sistema de Circulación

Titulo VI Formulario de Quejas

Nota: La Cuidad de Palmetto Bay se compromete a cumplir con el Titulo VI de la Ley de Derechos Civiles del 1964 que declara que "ninguna persona en los Estados Unidos, por motive de raza, color u origen nacional, será excluida de participar en, ser negada los beneficios de, o ser objeto de discriminación bajo ningún programa o actividad recibiendo asistencia federal." Dos órdenes ejecutivas extienden protección bajo el Titulo VI a la justicia ambiental, que también protege a las personas de bajos recursos, y habilidad limitada de inglés.

Si necesita asistencia llenando este formulario, por favor comuníquese con la oficina del Gerente de la Cuidad.

POR FAVOR LLENAR COMPLETAMENTE.

Sección I:	
Nombre:	
Dirección:	
Teléfonos: (Casa) _____ (Trabajo) _____ (Móvil) _____	
Correo Electrónico:	
Sección II:	
¿Está llenando esta queja por usted mismo? Si*_____ No** _____	
*Si contesto "Si" a esta pregunta, siga a la Sección III. ** Si contesto "No" a esta pregunta, por favor provea el nombre y la relación de la persona por la cual está llenando esta queja: Nombre: _____ Relación:_____	
Por favor explique porque ha llenado este formulario para una tercera persona:	
Por favor confirme que usted ha recibido permiso de la persona agraviada, si está llenando esta queja por una tercera persona.	Si _____ No _____
Sección III:	
Creo que la discriminación experimentada fue basada en (marque todo el que aplique): ( )Raza ( )Color ( )Origen Nacional ( )Sexo ( )Edad ( ) Debilitación ( ) Religión ( ) Estado Financiero de Familia Fecha en que la supuesta discriminación ocurrió (mes, día, año): _____	

Explique lo más claramente posible lo que pasó y por qué usted cree que fue discriminado. Describa a todas las personas que estuvieron involucradas. Incluya el nombre e información de contacto de la persona que discriminó (si lo conoce) así como nombres e información de contacto de testigos. (Si se necesita más espacio, utilice el dorso de este formulario o adjunte hojas adicionales.

Usted puede añadir cualquier material por escrito u otra información que crea que es pertinente a su queja. Firma y fecha especificadas a continuación.

_____ _____

Firma Fecha

Por Favor presenté este formulario en persona a la dirección siguiente, ó envié este formulario por correo a:

Village of Palmetto Bay
Public Services Department
9495 SW 180th Street
Palmetto Bay, FL 33157

Si necesita información en cualquier otro idioma, por favor comuníquese al 305-259-1234

APPENDIX F

Letter Acknowledging Receipt of Complaint

Village Letterhead

Date

Complainant's Name
Complainant's Address

Dear (Mr./Ms.):

This letter is to acknowledge receipt of your complaint against the Village of Palmetto Bay alleging: . An investigation will begin shortly. If you have additional information you wish to convey or questions concerning this matter, please feel free to contact this office by telephoning 305-259-1234, or write to me at this address.

Sincerely,

Attention: Village of Palmetto Bay
Public Service Department
9495 SW 180th Street
Palmetto Bay, Florida 33157

Florida Department of Transportation-Equal Opportunity Office
ATTN: Title VI Complaint Processing 605
Suwannee Street MS 65
Tallahassee, FL 32399

APPENDIX G

Letter Notifying Complaintant that the Complaint is Substantiated

Village Letterhead

Date

Complainant's Name
Complainant's Address

Dear (Mr./Ms.):

The matter referenced in your letter of (date) against the Village of Palmetto Bay alleging Title VI violation has been investigated. The violation of the Title VI of the Civil Rights Act of 1964 mentioned in your letter was identified. Corrective action of this deficiency(s) is being implemented to ensure that this issue does not arise again Thank you for bringing this important matter to our attention.

Sincerely,

Village of Palmetto Bay
Public Service Department
9495 SW 180th Street
Palmetto Bay, Florida 33157

APPENDIX H

Letter Notifying Complaintant that the Complaint is Not Substantiated

Village Letterhead

Date

Complainant's Name
Complainant's Address

Dear (Mr./Ms.):

The matter referenced in your complaint of (date) against the Village of Palmetto Bay alleging _____ has been investigated.

The results of the investigation did not indicate that the provisions of Title VI of the Civil Rights Act of 1964 had in fact been violated. As you know, Title VI prohibits discrimination based on race, color, or national origin in any program receiving federal financial assistance.

The Village Attorney has analyzed the materials and facts pertaining to your case for evidence of the city's failure to comply with any of the civil rights laws. There was no evidence found that any of these laws have been violated.

I therefore advise you that your complaint has not been substantiated, and that I am closing this matter in our files. You have the right to:

1. Appeal within seven calendar days of receipt of this final written decision from the Village; and/or
2. File a complaint externally with the U.S. Department of Transportation and/or the FTA.

Thank you for taking the time to contact us. If I can be of assistance to you in the future, do not hesitate to call me.

Sincerely,

Village of Palmetto Bay
Public Service Department
9495 SW 180th Street
Palmetto Bay, Florida 33157

APPENDIX I

Title VI Investigations, Complaints, and Lawsuits

Title VI- Complaint Monitoring

Reference No.	Date Complaint Received	Date of Incident	Summary (describe complaint; race, color, or national origin, sex, age, disability, religion, income or family status)	Status (ongoing/closed)	Action(s) Taken	Date of Action

Note: The Village of Palmetto Bay does not have any complaints to disclose at this time. Any future disclosures will be listed under the Title VI Program Plan.

Title VI- Investigation Monitoring

Reference No.	Date Complaint Received	Date of Incident	Summary (describe complaint; race, color, or national origin, sex, age, disability, religion, income or family status)	Status (ongoing/closed)	Action(s) Taken	Date of Action

Note: The Village of Palmetto Bay does not have any investigations to disclose at this time. Any future disclosures will be listed under the Title VI Program Plan.

Title VI- Lawsuit Monitoring

Reference No.	Date Complaint Received	Date of Incident	Summary (describe complaint; race, color, or national origin, sex, age, disability, religion, income or family status)	Status (ongoing/closed)	Action(s) Taken	Date of Action

Note: The Village of Palmetto Bay does not have any lawsuits to disclose at this time. Any future disclosures will be listed under the Title VI Program Plan.

APPENDIX J

VILLAGE OF PALMETTO BAY

Language Assistance Plan (LAP)

December 2021

INTRODUCTION

The Village of Palmetto Bay (Village) as a sub-recipient of federal funding is required to ensure that Limited English Proficient (LEP) persons have meaningful access to programs and activities by developing and carrying out a language implementation plan pursuant to recommendations in Section VII of the U.S. Department of Transportation (DOT) LEP Guidance.

The starting point for the Language Assistance Plan (LAP) is the four-factor analysis developed by the U.S. Department of Transportation to assist agencies in creating language access plans. The four-factor approach allows the Village to prioritize types of language services and to ensure that appropriate language assistance resources are promptly available where most needed.

DEMOGRAPHIC INFORMATION

The Village determined the extent of its obligation to provide LEP services by employing the recommended four-factor analysis. This assessment includes:

1. The number or proportion of LEP persons eligible to be served or likely to encounter the Village's programs and services; and
2. The frequency with which LEP individuals come in contact with the Village's programs and services; and
3. The importance of Village's programs and services to people's lives; and
4. The resources available to the Village and costs associated with providing language services

Factor 1: The number or proportion of LEP persons eligible to be served or likely to encounter the Village's programs and services

The data from the 2019 U.S. Census Bureau data and www.palmettobay-fl.gov on Table 1 & 2 provides information of those speaking a language other than English at home in the Village of Palmetto Bay.

Table 1: Language Spoken at Home in the Village of Palmetto Bay

AMONG PEOPLE LIVING IN THE VILLAGE OF PALMETTO BAY	ESTIMATE	PERCENT
Population	22,950	
English Only	11,442	49.9%
Language other than English	11,508	50.1%

Table 2: Analysis of LEP Population in the Village of Palmetto Bay

SELECTED SOCIAL CHARACTERISTICS IN THE U.S.- SPEAK A LANGUAGE OTHER THAN ENGLISH AT HOME	ESTIMATE	PERCENT
Spanish	6,630	41.0%
Other Languages	1,278	7.9%

Table 3: Analysis of LEP Population in the Village of Palmetto Bay

RACE	NUMBER	PERCENT
White Non-Hispanic	10,324	42.1%
Black Non-Hispanic	907	3.7%
Hispanic	11,428	46.6%
Some Other Race	1,866	7.61%

The 2010 Census Survey Data shows that Hispanic has the largest non-English speaking population living in the Village. With Spanish as the primary language spoken, staff has determined that Spanish is an eligible LEP language group.

Factor 2: The frequency with which LEP individuals come in contact with Village services

Staff will survey the frequency LEP individuals use Village services at the front desk of Village Hall, parks and Recreation, Permitting, Planning and Zoning and Public Works. The results of the survey will then be used to assess the Village's language assistance needs.

Factor 3: The importance of the Village of palmetto Bay services to people's lives

Accessing the Village's emergency, planning, permitting and recreational services are very important to the residents, and staff will strive to provide language assistance when needed.

Factor 4: The resources available to the Village of Palmetto Bay and costs associated with providing language services

Adequate resources are critical for a successful LAP program. At this time, the costs associated with delivery of service to LEP individuals are not known. Self-assessment of costs will help to identify resources spent and needed for the LAP program. Reduction of costs for language services shall be pursued through use of technology, sharing of materials and services, use of bilingual staff resources, efficient procurement of contract services, and community participation.

Language Assistance Services

The Village's administrative and field staff has several bilingual employees who speak English and Spanish. Staff with bilingual capabilities will be available to LEP individuals if needed. An employee survey will be conducted to determine what other languages, other than English are understood and spoken. This information will be documented and analyzed to enhance the effectiveness of the LAP.

Notification to LEP Individuals

The public must be informed of their rights under Title VI. This will be done by:

- Notification displayed at Village of Palmetto Bay front desk of Village Hall, parks and Recreation, Permitting, Planning and Zoning and Public Works;
- Notification will be posted on the Village's website (www.palmettobay-fl.gov); and
- Notification will be posted on all Village issued publications

Public Participation and Outreach

The Village of Palmetto Bay employs a number of methods to inform the public of Village programs and services, including but not limited to the following:

- Press releases;
- Ads and public notices in E-Current;
- Community meetings/workshops
- Information posted on the Village of Palmetto Bay website (www.palmettobay-fl.gov);
- Facebook, Instagram, and X (formerly known as Twitter); and
- Information posted on the Village of Palmetto Bay YouTube channel

Staff Training

The Village of Palmetto Bay works to educate its staff with the knowledge of and sensitivity to the needs of LEP residents. Staff will be trained on procedures for accommodating LEP populations. Some of the items covered include information about LEP guidance from the U.S. DOT.

Training Materials

Training materials will be developed for staff that interacts with LEP populations. The materials will include instruction on how to respond to face to face interactions, phone inquiries and written communications from LEP persons. Training materials will include instruction on how to arrange for translation services should they be required.

Monitoring and Updating of the LAP

The Village will monitor requests for translations and adjust practices to meet demand while maintaining a basic level of access by LEP populations to vital information. Staff will be using Language Identification Cards to help identify what languages people they interact with use. These cards will be issued at all the public counters in order to collect more data on the languages spoken by Palmetto Bay residents. These cards are collected, and the data tabulated to be included in future LEP plan updates.

Contact Information

Any comments or questions related to this plan should be directed to the designated Title VI representative, Mr. Dionisio Torres, Public Service Department: 9495 SW 180th Street, Palmetto Bay, Florida 33157 or to the Office of the Village Manager, 9705 E. Hibiscus Street, Palmetto Bay, Florida 33157.

AGENDA ITEM NO. 12.B

Item Cover Page

REGULAR COUNCIL AGENDA ITEM REPORT

DATE:	March 2, 2026
SUBMITTED BY:	Fanny Carmona, Parks and Recreation
ITEM TYPE:	Resolution
AGENDA SECTION:	CONSENT AGENDA
SUBJECT:	A RESOLUTION OF THE MAYOR AND VILLAGE COUNCIL OF THE VILLAGE OF PALMETTO BAY, FLORIDA, REGARDING PARKS AND RECREATION; AUTHORIZING THE USE OF THALATTA ESTATE AT NO COST, TO CHABAD OF PALMETTO BAY AND DEERING BAY, INC. ON MARCH 3, 2026, FOR THE PURPOSE OF HOSTING A HOLIDAY OF PURIM EVENT; AND PROVIDING AN EFFECTIVE DATE. *(Sponsored by Administration and Prepared by Parks & Recreation Director, Fanny Carmona)*
SUGGESTED ACTION:	

ATTACHMENTS:

Memo-Chabad of Palmetto BayHoliday of Purim 3-3-26 TE.doc
Summary of Fees- Chabad PB - Holiday of Purim TE 3-3- 2026.pdf
RESO-Chabad of Palmetto Bay - Holiday of Purim Event 3-3-26 TE.doc
Chabad of Palmetto Bay Inc _ Print _ Candid.pdf

To: Honorable Mayor and Village Council

Date: March 2, 2026

From: Nick Marano, Village Manager

Re: Fee Waiver – Chabad of Palmetto Bay- Holiday of Purim Event at Thalatta Estate

A RESOLUTION OF THE MAYOR AND VILLAGE COUNCIL OF THE VILLAGE OF PALMETTO BAY, FLORIDA, REGARDING PARKS AND RECREATION; AUTHORIZING THE USE OF THALATTA ESTATE AT NO COST, TO CHABAD OF PALMETTO BAY AND DEERING BAY, INC. ON MARCH 3, 2026, FOR THE PURPOSE OF HOSTING A HOLIDAY OF PURIM EVENT; AND PROVIDING AN EFFECTIVE DATE. *(Sponsored by Administration and Prepared by Fanny Carmona, Parks & Recreation Director)*

BACKGROUND AND ANALYSIS:

Chabad Jewish Center of Palmetto Bay and Deering Bay, Inc., is directed by Rabbi Zalman and Rebbetzin Chani Gansburg. Rabbi Gansburg was born in Milan, Italy, studied in Rabbinical colleges, in France, England, Israel and Canada, and received his Rabbinical ordination at the Rabbinical College of America. Chani Gansburg was born in Vancouver, Canada, and raised in Johannesburg, South Africa. Chani Gansburg received her teaching degree in Melbourne, Australia. Rabbi Gansburg and Chani met and married in New York, and soon after their wedding they moved to Miami. Both stemming from parents who serve as emissaries of the Chabad movement around the world, Rabbi Zalman and Chani Gansburg are continuing the legacy of being emissaries of the Lubavitcher Rebbe. The Chabad Jewish Center of Palmetto Bay is dedicated to serving all Jews throughout Palmetto Bay with unconditional love and concern for every Jew, regardless of background and affiliation. Chabad of Palmetto Bay would like to host a Holiday of Purim Event at Thalatta Estate on March 3, 2026; and is requesting a waiver of all fees in utilization of Estate and associated amenities. Chabad of Palmetto Bay will be required to comply with all applicable rules, regulations, Ordinances, including payment for the following service

not applicable for a fee waiver: Security Guard services $116.36.

FISCAL/BUDGETARY IMPACT:
This estimate is provided for reference purposes only and does not reflect actual spending. The projected value of the park space, if it were to be rented, would be $3,856.01. Estimated staff time to support the event is valued at no more than $204. The total is $4,060.01.

RECOMMENDATION:
Approval is recommended

Attachments (3):

- Fee waiver application
- Summary of fees
- Incorporation Status

THALATTA ESTATE

Chabad PM PURIM
Tuesday, March 3, 2026

Hours of Service Valet
4:30-10:30 PM
Hours of Service Security
4:30-10:30 PM
6hr
Event Hours:
5-10 PM
5 hours
Number of Guests
49

Rental Amount (Package)	$	2,500.00
	$	-
	$	-
String Lights	$	750.00
Facility Service Fee	$	245.00
7% Taxes	$	244.65
Valet Event Services Cost		
C-100 Parking Lot Fee ($642 inlcudes tax)		
Security Event Services Cost	$	116.36
TOTAL DUE:	**$**	**3,856.01**
50% Rental Amount Deposit Due (Check or Money Order)	**$**	**1,928.01**
2.25% Credit Card Processing Fee (non-refundable)	$	43.38
50% Rental Amount Deposit due - if paying with credit card	$	1,971.39
Balance Due 30 days prior to Event (Check or Money Order)	**$**	**1,928.01**
2.25% Credit Card Processing Fee (non-refundable)	$	43.38
Final Balance Due - if paying with credit card	**$**	**1,971.39**
Fees Due w/Waiver	**$**	**116.36**

FEES ARE SUBJECT TO CHANGE.

Agreed and Accepted by _____ Date _____

I have read, understand and accept the terms of the rental summary of fees. Thalatta Estates Summary of fees agreement is null and void without an accompaying signed rental application agreement.

VLP 2/13/26

RESOLUTION NO. 2026-_____

A RESOLUTION OF THE MAYOR AND VILLAGE COUNCIL OF THE VILLAGE OF PALMETTO BAY, FLORIDA, REGARDING PARKS AND RECREATION; AUTHORIZING THE USE OF THALATTA ESTATE AT NO COST, TO CHABAD OF PALMETTO BAY AND DEERING BAY, INC. ON MARCH 3, 2026, FOR THE PURPOSE OF HOSTING A HOLIDAY OF PURIM EVENT; AND PROVIDING AN EFFECTIVE DATE. *(Sponsored by Administration and Prepared by Fanny Carmona, Parks & Recreation Director)*

WHEREAS, Chabad Jewish Center of Palmetto Bay and Deering Bay, Inc. is directed by Rabbi Zalman and Rebbetzin Chani Gansburg; and

WHEREAS, Rabbi Gansburg, was born in Milan, Italy, studied in Rabbinical colleges, in France, England, Israel and Canada, and received his Rabbinical ordination at the Rabbinical College of America; and

WHEREAS, Chani Gansburg, born in Vancouver, Canada, and raised in Johannesburg, South Africa, received her teaching degree in Melbourne, Australia; and

WHEREAS, both met and married in New York, and soon after their wedding they moved to Miami; and

WHEREAS, both stemming from parents who serve as emissaries of the Chabad movement around the world, Rabbi Zalman and Chani Gansburg are continuing the legacy of being emissaries of the Lubavitcher Rebbe; and

WHEREAS, the Chabad Jewish Center of Palmetto Bay is dedicated to serving all Jews throughout Palmetto Bay with unconditional love and concern for every Jew, regardless of background and affiliation**;** and

WHEREAS, Chabad of Palmetto Bay and Deering Bay, Inc. would like to host a Holiday of Purim Event on March 3, 2026; and is requesting a waiver of all fees in utilization of Thalatta Estate and associated amenities.

NOW, THEREFORE, BE IT RESOLVED BY THE VILLAGE OF PALMETTO BAY, FLORIDA, THAT:

Section 1. Chabad of Palmetto Bay and Deering Bay, Inc. is hereby authorized to use Thalatta Estate, on, March 3, 2026, for the purpose of hosting a Holiday of Purim Event.

Section 2. Any and all established user fees are hereby waived, and Chabad of Palmetto Bay and Deering Bay, Inc. shall have use of the needed park amenities at no cost; with the proviso that the recipient complies with all applicable rules, regulations and ordinances.

Section 3. This resolution shall take effect immediately upon its adoption.

PASSED and **ADOPTED** this _____ day of March 2026.

Attest:

_____ _____

Missy Arocha
Village Clerk

Karyn Cunningham
Mayor

APPROVED AS TO FORM AND LEGAL SUFFICIENCY FOR THE SOLE USE AND RELIANCE OF THE VILLAGE OF PALMETTO BAY, FLORIDA ONLY:

_____

John J. Quick
Village Attorney

FINAL VOTE AT ADOPTION:

Council Member Patrick Fiori _____

Council Member Steve Cody _____

Council Member Marsha Matson _____

Vice-Mayor Mark Merwitzer _____

Mayor Karyn Cunningham _____

Report generated on 2/13/2026

Chabad of Palmetto Bay Inc

Former name: *Chabad of Palmetto Bay*

EIN 26-1368692
Location Palmetto Bay, FL, United States
Ruling year 2009

IRS subsection 501(c)(3) Public Charity
Organization type Places of worship, Public charities, Religious institutions

Subscribe to Candid Ultimate to access compliance information.
Learn more

IRS filing requirement
This organization is not required to file an annual return with the IRS because it is a church.

Our focus

Subject area

Religion
— Judaism

NTEE codes

Jewish (X30)

Contact

Primary address
16721 SW 78th Ct
Palmetto Bay, FL 33157
United States

Congressional district: Florida Congressional District 27

Grants

Chabad of Palmetto Bay Inc has received **22 grants** from **9 grantmakers** totaling **$89,154** over the most recent 5 years of available data.

Subject areas

Year	Number of grants	↓ Value of gra

Total giving

Contact Candid

Year	Number of grants	Value of gra

Grants given

$0
Total grant value

Grants	0
Recipients	0

Snapshot

Average grant size	$0
Midpoint grant size	$0
Most common grant size	$0
Range	$0

Grants received

$173,535
Total grant value

Grants	33
Funders	12

Snapshot

Average grant size	$5,259
Midpoint grant size	$1,000
Most common grant size	$1,000
Range	$13-$40.9K

AGENDA ITEM NO. 12.C

Item Cover Page

REGULAR COUNCIL AGENDA ITEM REPORT

DATE:	March 2, 2026
SUBMITTED BY:	Fanny Carmona, Parks and Recreation
ITEM TYPE:	Resolution
AGENDA SECTION:	CONSENT AGENDA
SUBJECT:	A RESOLUTION OF THE MAYOR AND VILLAGE COUNCIL OF THE VILLAGE OF PALMETTO BAY, FLORIDA, REGARDING PARKS AND RECREATION; AUTHORIZING THE USE OF THALATTA ESTATE AT NO COST, TO CHABAD OF PALMETTO BAY AND DEERING BAY, INC. ON MARCH 29, 2026, FOR THE PURPOSE OF HOSTING A COMMUNITY GET-TOGETHER EVENT; AND PROVIDING AN EFFECTIVE DATE. *(Sponsored by Administration and Prepared by Parks & Recreation Director, Fanny Carmona)*
SUGGESTED ACTION:	

ATTACHMENTS:

Memo-Chabad of Palmetto Bay Community Get-Together event 3-29-26 TE.doc
Summary of Fees- Chabad PB - Community Get-Together TE 3-29- 2026.pdf
RESO-Chabad of Palmetto Bay Community Get-Together 3-29-26 TE.doc
Chabad of Palmetto Bay Inc _ Print _ Candid.pdf

To: Honorable Mayor and Village Council

Date: March 2, 2026

From: Nick Marano, Village Manager

Re: Fee Waiver – Chabad of Palmetto Bay- Community Get-Together at Thalatta Estate

A RESOLUTION OF THE MAYOR AND VILLAGE COUNCIL OF THE VILLAGE OF PALMETTO BAY, FLORIDA, REGARDING PARKS AND RECREATION; AUTHORIZING THE USE OF THALATTA ESTATE AT NO COST, TO CHABAD OF PALMETTO BAY AND DEERING BAY, INC. ON MARCH 29, 2026, FOR THE PURPOSE OF HOSTING A COMMUNITY GET-TOGETHER EVENT; AND PROVIDING AN EFFECTIVE DATE. *(Sponsored by Administration and Prepared by Fanny Carmona, Parks & Recreation Director)*

BACKGROUND AND ANALYSIS:

Chabad Jewish Center of Palmetto Bay and Deering Bay, Inc., is directed by Rabbi Zalman and Rebbetzin Chani Gansburg. Rabbi Gansburg was born in Milan, Italy, studied in Rabbinical colleges, in France, England, Israel and Canada, and received his Rabbinical ordination at the Rabbinical College of America. Chani Gansburg was born in Vancouver, Canada, and raised in Johannesburg, South Africa. Chani Gansburg received her teaching degree in Melbourne, Australia. Rabbi Gansburg and Chani met and married in New York, and soon after their wedding they moved to Miami. Both stemming from parents who serve as emissaries of the Chabad movement around the world, Rabbi Zalman and Chani Gansburg are continuing the legacy of being emissaries of the Lubavitcher Rebbe. The Chabad Jewish Center of Palmetto Bay is dedicated to serving all Jews throughout Palmetto Bay with unconditional love and concern for every Jew, regardless of background and affiliation. Chabad of Palmetto Bay would like to host a Community Get-Together Event at Thalatta Estate on March 29, 2026; and is requesting a waiver of all fees in utilization of Estate and associated amenities. Chabad of Palmetto Bay will be required to comply with all applicable rules, regulations, Ordinances, including payment for the following service

not applicable for a fee waiver: Security Guard services $93.09.

FISCAL/BUDGETARY IMPACT:
This estimate is provided for reference purposes only and does not reflect actual spending. The projected value of the park space, if it were to be rented, would be $6,507.74. Estimated staff time to support each event is valued at no more than $136. The total is $6,643.74.

RECOMMENDATION:
Approval is recommended

Attachments (3):

- Fee waiver application
- Summary of fees
- Incorporation Status

THALATTA ESTATE

Chabad PM Community Get-Together
Sunday, March 29, 2026

Hours of Service Valet
6:30-10:30 PM
Hours of Service Security
6:30-10:30 PM
4hr
Event Hours:
7-10 PM
3 hours
Number of Guests
49

Rental Amount (Package)	$	5,000.00
	$	-
	$	-
String Lights	$	750.00
Facility Service Fee	$	245.00
7% Taxes	$	419.65
Valet Event Services Cost		
C-100 Parking Lot Fee ($642 inlcudes tax)		
Security Event Services Cost	$	93.09
TOTAL DUE:	**$**	**6,507.74**
50% Rental Amount Deposit Due (Check or Money Order)	**$**	**2,675.00**
2.25% Credit Card Processing Fee (non-refundable)	$	60.19
50% Rental Amount Deposit due - if paying with credit card	$	2,735.19
Balance Due 30 days prior to Event (Check or Money Order)	**$**	**3,832.74**
2.25% Credit Card Processing Fee (non-refundable)	$	86.24
Final Balance Due - if paying with credit card	**$**	**3,918.98**
Fees Due w/Waiver	**$**	**139.64**

FEES ARE SUBJECT TO CHANGE.

Agreed and Accepted by _____ Date _____

I have read, understand and accept the terms of the rental summary of fees. Thalatta Estates Summary of fees agreement is null and void without an accompaying signed rental application agreement.

VLP 2/13/26

RESOLUTION NO. 2026-_____

A RESOLUTION OF THE MAYOR AND VILLAGE COUNCIL OF THE VILLAGE OF PALMETTO BAY, FLORIDA, REGARDING PARKS AND RECREATION; AUTHORIZING THE USE OF THALATTA ESTATE AT NO COST, TO CHABAD OF PALMETTO BAY AND DEERING BAY, INC. ON MARCH 29, 2026, FOR THE PURPOSE OF HOSTING A COMMUNITY GET-TOGETHER; AND PROVIDING AN EFFECTIVE DATE. *(Sponsored by Administration and Prepared by Fanny Carmona, Parks & Recreation Director)*

WHEREAS, Chabad Jewish Center of Palmetto Bay and Deering Bay, Inc. is directed by Rabbi Zalman and Rebbetzin Chani Gansburg; and

WHEREAS, Rabbi Gansburg, was born in Milan, Italy, studied in Rabbinical colleges, in France, England, Israel and Canada, and received his Rabbinical ordination at the Rabbinical College of America; and

WHEREAS, Chani Gansburg, born in Vancouver, Canada, and raised in Johannesburg, South Africa, received her teaching degree in Melbourne, Australia; and

WHEREAS, both met and married in New York, and soon after their wedding they moved to Miami; and

WHEREAS, both stemming from parents who serve as emissaries of the Chabad movement around the world, Rabbi Zalman and Chani Gansburg are continuing the legacy of being emissaries of the Lubavitcher Rebbe; and

WHEREAS, the Chabad Jewish Center of Palmetto Bay is dedicated to serving all Jews throughout Palmetto Bay with unconditional love and concern for every Jew, regardless of background and affiliation**;** and

WHEREAS, Chabad of Palmetto Bay and Deering Bay, Inc. would like to host a Community Get-Together Event on March 29, 2026; and is requesting a waiver of all fees in utilization of Thalatta Estate and associated amenities.

NOW, THEREFORE, BE IT RESOLVED BY THE VILLAGE OF PALMETTO BAY, FLORIDA, THAT:

Section 1. Chabad of Palmetto Bay and Deering Bay, Inc. is hereby authorized to use Thalatta Estate, on, March 29, 2026, for the purpose of hosting a Community Get-Together.

Section 2. Any and all established user fees are hereby waived, and Chabad of Palmetto Bay and Deering Bay, Inc. shall have use of the needed park amenities at no cost; with the proviso that the recipient complies with all applicable rules, regulations and ordinances.

Section 3. This resolution shall take effect immediately upon its adoption.

PASSED and **ADOPTED** this _____ day of March 2026.

Attest:

_____	_____
Missy Arocha	Karyn Cunningham
Village Clerk	Mayor

APPROVED AS TO FORM AND LEGAL SUFFICIENCY FOR THE SOLE USE AND RELIANCE OF THE VILLAGE OF PALMETTO BAY, FLORIDA ONLY:

_____
John J. Quick
Village Attorney

FINAL VOTE AT ADOPTION:

Council Member Patrick Fiori _____

Council Member Steve Cody _____

Council Member Marsha Matson _____

Vice-Mayor Mark Merwitzer _____

Mayor Karyn Cunningham _____

Report generated on 2/13/2026

Chabad of Palmetto Bay Inc

Former name: *Chabad of Palmetto Bay*

EIN 26-1368692
Location Palmetto Bay, FL, United States
Ruling year 2009

IRS subsection 501(c)(3) Public Charity
Organization type Places of worship, Public charities, Religious institutions

Subscribe to Candid Ultimate to access compliance information.
Learn more

IRS filing requirement
This organization is not required to file an annual return with the IRS because it is a church.

Our focus

Subject area

Religion
— Judaism

NTEE codes

Jewish (X30)

Contact

Primary address
16721 SW 78th Ct
Palmetto Bay, FL 33157
United States

Congressional district: Florida Congressional District 27

Grants

Chabad of Palmetto Bay Inc has received **22 grants** from **9 grantmakers** totaling **$89,154** over the most recent 5 years of available data.

Subject areas

Year	Number of grants	↓ Value of gra

Total giving

Contact Candid

Year	Number of grants	Value of gra

Grants given

$0
Total grant value

Grants	0
Recipients	0

Snapshot

Average grant size	$0
Midpoint grant size	$0
Most common grant size	$0
Range	$0

Grants received

$173,535
Total grant value

Grants	33
Funders	12

Snapshot

Average grant size	$5,259
Midpoint grant size	$1,000
Most common grant size	$1,000
Range	$13-$40.9K

AGENDA ITEM NO. 12.D

Item Cover Page

REGULAR COUNCIL AGENDA ITEM REPORT

DATE: March 2, 2026

SUBMITTED BY: Desmond Chin, Finance

ITEM TYPE: Resolution

AGENDA SECTION: CONSENT AGENDA

SUBJECT: A RESOLUTION OF THE MAYOR AND VILLAGE COUNCIL OF THE VILLAGE OF PALMETTO BAY, ESTABLISHING AN AUDITOR SELECTION COMMITTEE PER SECTION 218.391 FLORIDA STATUTES, FOR THE PURPOSE OF ASSISTING THE VILLAGE COUNCIL IN SELECTING AN AUDITOR TO CONDUCT THE ANNUAL FINANCIAL AUDIT REQUIRED IN SECTION 218.39, FLORIDA STATUTES; AND PROVIDING FOR AN EFFECTIVE DATE. *(Sponsored by Administration and prepared by Finance Director, Desmond Chin)*

SUGGESTED ACTION:

ATTACHMENTS:
2026 Audit Committee MEMO.doc
2026 Audit Committee.doc

To: Honorable Mayor and Village Council

Date: March 2, 2026

From: Nicholas Marano, Village Manager

Re: Auditor Selection Committee

A RESOLUTION OF THE MAYOR AND VILLAGE COUNCIL OF THE VILLAGE OF PALMETTO BAY, ESTABLISHING AN AUDITOR SELECTION COMMITTEE PER SECTION 218.391 FLORIDA STATUTES, FOR THE PURPOSE OF ASSISTING THE VILLAGE COUNCIL IN SELECTING AN AUDITOR TO CONDUCT THE ANNUAL FINANCIAL AUDIT REQUIRED IN SECTION 218.39, FLORIDA STATUTES; AND PROVIDING FOR AN EFFECTIVE DATE. (Sponsored by Administration and prepared by Finance Director, Desmond Chin)

BACKGROUND AND ANALYSIS:

Section 218.39, Florida Statutes requires an annual financial audit of Village accounts and records by an independent certified public accountant retained by the Village Council. To retain an independent certified public accountant Section 218.391, Florida Statutes requires the Auditor Selection Committee to consist of at least three members, and furthermore requires one member of the Auditor Selection Committee be a member of the Village Council and serve as the chair of the Committee. Section 218.391, Florida Statutes prohibits Village employees, the Village Manager or the Chief Financial Officer from serving on the Auditor Selection Committee but allows them to serve in an advisory capacity.

A Chair needs to be selected from among the Village Council. In addition, two individuals with financial backgrounds have graciously agreed to be on the Village's selection committee. The Auditor Selection Committee members are:

Patrick Fiore, Council Member and Chair Person
Carlos Perez, Finance Director - City of Homestead
Kay Grant, Finance Director – Town of Miami Lakes

FISCAL IMPACT:
There is no fiscal impact.

RECOMMENDATION:
The Administration recommends approval of the Auditor Selection committee.

RESOLUTION NO. 2026-_____

A RESOLUTION OF THE MAYOR AND VILLAGE COUNCIL OF THE VILLAGE OF PALMETTO BAY, ESTABLISHING AN AUDITOR SELECTION COMMITTEE PER SECTION 218.391 FLORIDA STATUTES, FOR THE PURPOSE OF ASSISTING THE VILLAGE COUNCIL IN SELECTING AN AUDITOR TO CONDUCT THE ANNUAL FINANCIAL AUDIT REQUIRED IN SECTION 218.39, FLORIDA STATUTES; AND PROVIDING FOR AN EFFECTIVE DATE. (Sponsored by Administration and prepared by Finance Director, Desmond Chin)

WHEREAS, Section 218.39, Florida Statutes requires an annual financial audit of Village accounts and records by an independent certified public accountant retained by the Village Council; and

WHEREAS, Section 218.391, Florida Statutes requires the use of an Auditor Selection Committee when selecting an auditor to conduct the financial audit required in Section 218.39, Florida Statutes; and

WHEREAS, Section 218.391, Florida Statutes prohibits Village employees, the Village Manager or the Chief Financial Officer from serving on the Auditor Selection Committee but allows them to serve in an advisory capacity; and

WHEREAS, the Village Council desires to establish an Auditor Selection Committee to evaluate and recommend to the Village Council an auditor to conduct the annual financial audit required in Section 218.39, Florida Statutes, and such Committee shall terminate upon execution of an agreement between the Village and the auditor.

NOW, THEREFORE, BE IT RESOLVED BY THE MAYOR AND VILLAGE COUNCIL OF THE VILLAGE OF PLAMETTO BAY, FLORIDA, AS FOLLOWS:

Section 1. The above recitals are true and correct and incorporated as set forth fully herein.

Section 2. An Auditor Selection Committee comprised of the following is hereby established: Patrick Fiore (Chair), Carlos Perez, Finance Director - City of Homestead, Kay Grant, Finance Director – Town of Miami Lakes.

Section 3. The purpose of the Auditor Selection Committee is to establish factors to use for the evaluation of audit services to be provided by a certified public accounting firm, publicly announce requests for proposals, evaluate the proposals, and rank and recommend firms in order of preference to the Village Council for an auditor to conduct the annual financial audit in accordance with Section 218.39, Florida Statutes.

Section 4. The Auditor Selection Committee shall terminate upon execution of an agreement between the Village and the auditor.

Section 5. This resolution shall take effect immediately upon its adoption.

PASSED and **ADOPTED** this 2nd day of March, 2026.

Attest:

_____	_____
Missy Arocha	Karyn Cunningham
Village Clerk	Mayor

APPROVED AS TO FORM AND LEGAL SUFFICIENCY FOR THE SOLE USE AND BENEFIT OF THE VILLAGE:

_____
John J. Quick
Village Attorney

FINAL VOTE AT ADOPTION:

Council Member Patrick Fiore _____

Council Member Steve Cody _____

Council Member Marsha Matson _____

Vice-Mayor Mark Merwitzer _____

Mayor Karyn Cunningham _____

AGENDA ITEM NO. 12.E

Item Cover Page

REGULAR COUNCIL AGENDA ITEM REPORT

DATE: March 2, 2026

SUBMITTED BY: Alessia Bencomo, Procurement

ITEM TYPE: Resolution

AGENDA SECTION: CONSENT AGENDA

SUBJECT: A RESOLUTION OF THE MAYOR AND VILLAGE COUNCIL OF THE VILLAGE OF PALMETTO BAY, FLORIDA, RELATED TO PROCUREMENT; APPROVING THE SELECTION OF PHOENIX CONCRETE PLUS, INC. TO REPLACE DESIGNATED AREAS OF ASPHALT WALKWAYS/TRAILS WITHIN PALMETTO BAY PARK AND CORAL REEF PARK, PURSUANT TO INVITATION TO BID (ITB) NO. 2025-12-010; AUTHORIZING THE VILLAGE MANAGER TO NEGOTIATE AND ENTER INTO A CONTRACT AND ISSUE A PURCHASE ORDER IN THE AMOUNT OF ONE HUNDRED TWENTY-FOUR THOUSAND SIX HUNDRED TWENTY-FOUR DOLLARS AND THIRTY-EIGHT CENTS ($124,624.38); AND PROVIDING FOR AN EFFECTIVE DATE. *(Sponsored by Administration and Prepared by Procurement Specialist, Alessia Bencomo)*

SUGGESTED ACTION:

ATTACHMENTS:

Reso Memo - PBP & CRP Trails.doc
Reso - PBP & CRP Trails.docx
Exhibit A - Recommendation Revised.pdf
Exhibit B - Tabulation and Bid Sheets.pdf

Exhibit C - ITB# 2025-12-010 - PBP & CRP Asphalt Trails.pdf
Exhibit D - Bid - Phoenix.pdf

To: Honorable Mayor and Village Council

Date: February 9, 2026

From: Nick Marano, Village Manager

Re: Palmetto Bay Park and Coral Reef Park – Replacement of Designated Areas of Asphalt Walking Trails

A RESOLUTION OF THE MAYOR AND VILLAGE COUNCIL OF THE VILLAGE OF PALMETTO BAY, FLORIDA, RELATED TO PROCUREMENT; APPROVING THE SELECTION OF PHOENIX CONCRETE PLUS, INC. TO REPLACE DESIGNATED AREAS OF ASPHALT WALKWAYS/TRAILS WITHIN PALMETTO BAY PARK AND CORAL REEF PARK, PURSUANT TO INVITATION TO BID (ITB) NO. 2025-12-010; AUTHORIZING THE VILLAGE MANAGER TO NEGOTIATE AND ENTER INTO A CONTRACT AND ISSUE A PURCHASE ORDER IN THE AMOUNT OF ONE HUNDRED TWENTY-FOUR THOUSAND SIX HUNDRED TWENTY-FOUR DOLLARS AND THIRTY-EIGHT CENTS ($124,624.38), AND PROVIDING FOR AN EFFECTIVE DATE. *(Sponsored by Administration and Prepared by Procurement Specialist, Alessia Bencomo)*

BACKGROUND AND ANALYSIS:

The Village is seeking a qualified Company for replacement of the designated areas of asphalt walkways/trails within Palmetto Bay Park located at 17535 SW 95th Avenue, Palmetto Bay, Florida 33157, and Coral Reef Park located at 7895 SW 152nd Street, Palmetto Bay, Florida 33157. The Village published an ITB# 2025-12-010 for the "PBP and CRP – Replacement of Designated Areas of Asphalt Walking Trails" on April 29th, 2025 and received a total of five (5) bids. Dekora, LLC., was the lowest responsive, responsible Bidder and approved by the Village Council on June 2nd, 2025.

On July 2nd, 2025, the Village entered into an Agreement with Dekora, LLC. relating to the replacement of designated areas of asphalt walkways/trails with PBP and CRP; and Dekora, LLC. original bid proposal failed to account for the full scope of work, specifically the installation of a layer of BIOBARRIER Root Control System on the excavated floor and walls of the subject trails, rendering their bid non-responsive. Dekora, LLC. provided written notice to the Village that Dekora, LLC. was unwilling and/or unable to complete the work for the agreed upon price. The Village provided a thirty (30) written termination notice to Dekora, LLC. on January 28th, 2026, effective from the date of this letter, or on February 28th, 2026. The Village wishes to proceed with the selection of Phoenix Concrete Plus, Inc., as the lowest, responsive, and responsible bidder to complete the scope of work as outlined in ITB# 2025-12-010.

FISCAL IMPACT:
The 2025-2026 fiscal budget for Parks and Recreation Capital Budget $124,624.38

Attachments:

A. Recommendation
B. Tabulation and Bid Sheets
C. ITB# 2025-12-010
D. Bid – Phoenix Concrete Plus, Inc.

RESOLUTION NO. 2026-_____

A RESOLUTION OF THE MAYOR AND VILLAGE COUNCIL OF THE VILLAGE OF PALMETTO BAY, FLORIDA, RELATED TO PROCUREMENT; APPROVING THE SELECTION OF PHOENIX CONCRETE PLUS, INC. TO REPLACE DESIGNATED AREAS OF ASPHALT WALKWAYS/TRAILS WITHIN PALMETTO BAY PARK AND CORAL REEF PARK, PURSUANT TO INVITATION TO BID (ITB) NO. 2025-12-010; AUTHORIZING THE VILLAGE MANAGER TO NEGOTIATE AND ENTER INTO A CONTRACT AND ISSUE A PURCHASE ORDER IN THE AMOUNT OF ONE HUNDRED TWENTY-FOUR THOUSAND SIX HUNDRED TWENTY-FOUR DOLLARS AND THIRTY-EIGHT CENTS ($124,624.38), AND PROVIDING FOR AN EFFECTIVE DATE. *(Sponsored by Administration and Prepared by Procurement Specialist, Alessia Bencomo)*

WHEREAS, the Village published ITB# 2025-12-010 for the "Palmetto Bay Park and Coral Reef Park – Replacement of Designated Areas of Asphalt Walking Trails" on April 29th, 2025; and

WHEREAS, the Village received a total of five (5) bids on May 16th, 2025 with the following results:

- Dekora, LLC.: $117,458.70
- Phoenix Concrete Plus, Inc.: $124,624.38
- V&G Construction Solutions, Corp.: $300,057.42
- Construction 95, LLC.: 328,974.87
- Millenium Builders, LLC.: 652,745.81; and

WHEREAS, Dekora, LLC., was the lowest responsive, responsible Bidder and approved by the Village Council on June 2nd, 2025; and

WHEREAS, on July 2nd, 2025, the Village entered into an Agreement with Dekora, LLC. relating to the replacement of designated areas of asphalt walkways/trails with PBP and CRP; and

WHEREAS, Dekora, LLC. original bid proposal failed to account for the full scope of work, specifically the installation of a layer of BIOBARRIER Root Control System on the excavated floor and walls of the subject trails, rendering their bid non-responsive; and

WHEREAS, Dekora, LLC. provided written notice to the Village that Dekora, LLC. was unwilling and/or unable to complete the work for the agreed upon price; and

WHEREAS, the Village provided a thirty (30) written termination notice to Dekora, LLC. on January 28th, 2026 effective from the date of this letter, or on February 28th, 2026; and

WHEREAS, the Village wishes to proceed with the selection of Phoenix Concrete Plus, Inc., as the lowest, responsive, and responsible bidder to complete the scope of work as outlined in ITB# 2025-12-010; and

WHEREAS, the Village Council finds that adoption of this resolution is in the best interest of the Village and its residents.

NOW THEREFORE, BE IT RESOLVED BY THE MAYOR AND VILLAGE COUNCIL OF THE VILLAGE OF PALMETTO BAY, FLORIDA, AS FOLLOWS:

Section 1. The above recitals are incorporated as if set forth in full.

Section 2. The selection of Phoenix Concrete Plus, Inc. pursuant to ITB# 2025-12-010, entitled "PBP and CRP – Replacement of Designated Areas of Asphalt Walking Trails" ("Project") is hereby approved.

Section 3. The Village Manager is hereby authorized to negotiate and enter into a contract and issue a purchase order not to exceed One Hundred Twenty-Four Thousand Six Hundred Twenty-Four Dollars and Thirty-Eight Cents ($124,624.38) with Phoenix Concrete Plus Inc. for said services.

Section 4. Notwithstanding the limitations imposed upon the Village Manager pursuant to the Village's Procurement/Purchasing Policies, the Village Manager is hereby authorized to expend budgeted funds for the Project.

Section 5. This Resolution shall take effect immediately upon its adoption.

PASSED and **ADOPTED** this 2nd day of March 2026.

Attest:

_____	_____
Missy Arocha	**Karyn Cunningham**
Village Clerk	**Mayor**

APPROVED AS TO FORM AND LEGAL SUFFICIENCY FOR THE SOLE USE AND BENEFIT OF THE VILLAGE:

_____
John J. Quick
Village Attorney

FINAL VOTE AT ADOPTION:

Council Member Patrick Fiore _____

Council Member Steve Cody _____

Council Member Marsha Matson _____

Vice-Mayor Mark Merwitzer _____

Mayor Karyn Cunningham _____

Village of Palmetto Bay
Procurement Division - Procurement Action
AWARD RECOMMENDATION

To: Nick Marano, Village Manager

From: Alessia Bencomo, Procurement Specialist

Date: 02/17/2026

ITB#: 2025-12-010	**Item/Service:** PBP and CRP – Replacement of Designated Areas of Asphalt Walking Trails

Attach please find the tabulation and bid proposals.

I. Procurement Comments:

There was a total of five (5) bids received, Construction 95, LLC., Dekora, LLC., Millenium Builders, LLC., Phoenix Concrete Plus, Inc., and V&G Construction Solutions Corp.

II. Recommendation:

a. Which bid is being recommended? **Phoenix Concrete Plus, Inc.**

b. Does the response being recommended for award meet the specifications as per the request and as advertised?
Yes __X__ No_____

c. Is the recommendation the lowest bid received?
Yes __X__ No_____

(attach an additional sheet if further comment or explanation is required)

III. Procurement Action/Recommendation(s):

The Procurement Specialist would like to move forward on the recommendation and be able to include as an agenda item for selection and award on the next Regular Council meeting held March 2nd, 2026.

IV. Recommendation Approval:

Acceptance to Move Forward with Intent to Award

Signature/Date

2/22/26

Nick Marano, Village Manager

				Constrcution 95, LLC.
Bid Item No.	**Description**	**Total Sq. Ft.**	**Unit Cost Per Sq. Ft.**	**Price/Unit**
1	Replacement of Existing Asphalt Walkway Trails at CRP	5963	$ 19.59	$ 116,815.17
BID TOTAL				**$ 116,815.17**

				Constrcution 95, LLC.
Bid Item No.	**Description**	**Total Sq. Ft.**	**Unit Cost Per Sq. Ft.**	**Price/Unit**
2	Replacement of Existing Asphalt Walkway Trails at PBP	10830	$ 19.59	$ 212,159.70
BID TOTAL				**$ 212,159.70**

GRAND TOTAL				**$ 328,974.87**

				Dekora, LLC.
Bid Item No.	**Description**	**Total Sq. Ft.**	**Unit Cost Per Sq. Ft.**	**Price/Unit**
1	Replacement of Existing Asphalt Walkway Trails at CRP	5963	$ 6.90	$ 41,144.70
BID TOTAL				**$ 41,144.70**

				Dekora, LLC.
Bid Item No.	**Description**	**Total Sq. Ft.**	**Unit Cost Per Sq. Ft.**	**Price/Unit**
2	Replacement of Existing Asphalt Walkway Trails at PBP	11060	$ 6.90	$ 76,314.00
BID TOTAL				**$ 76,314.00**

GRAND TOTAL				**$ 117,458.70**

				Millenium Builders, LLC.
Bid Item No.	**Description**	**Total Sq. Ft.**	**Unit Cost Per Sq. Ft.**	**Price/Unit**
1	Replacement of Existing Asphalt Walkway Trails at CRP	5963	$ 54.87	$ 327,189.81
BID TOTAL				**$ 327,189.81**

				Millenium Builders, LLC.
Bid Item No.	**Description**	**Total Sq. Ft.**	**Unit Cost Per Sq. Ft.**	**Price/Unit**
2	Replacement of Existing Asphalt Walkway Trails at PBP	9800	$ 33.22	$ 325,556.00
BID TOTAL				**$ 325,556.00**

GRAND TOTAL				**$ 652,745.81**

				Phoenix Concrete Plus, Inc.
Bid Item No.	**Description**	**Total Sq. Ft.**	**Unit Cost Per Sq. Ft.**	**Price/Unit**
1	Replacement of Existing Asphalt Walkway Trails at CRP	5963	$ 7.96	$ 47,465.48
BID TOTAL				**$ 47,465.48**

				Phoenix Concrete Plus, Inc.
Bid Item No.	**Description**	**Total Sq. Ft.**	**Unit Cost Per Sq. Ft.**	**Price/Unit**
2	Replacement of Existing Asphalt Walkway Trails at PBP	9730	$ 7.93	$ 77,158.90
BID TOTAL				**$ 77,158.90**

GRAND TOTAL				**$ 124,624.38**

				V&G Construction Solutions Corp.
Bid Item No.	**Description**	**Total Sq. Ft.**	**Unit Cost Per Sq. Ft.**	**Price/Unit**
1	Replacement of Existing Asphalt Walkway Trails at CRP	5963	$ 16.86	$ 100,536.18
BID TOTAL				**$ 100,536.18**

				V&G Construction Solutions Corp.
Bid Item No.	**Description**	**Total Sq. Ft.**	**Unit Cost Per Sq. Ft.**	**Price/Unit**
2	Replacement of Existing Asphalt Walkway Trails at PBP	11834	$ 16.86	$ 199,521.24
BID TOTAL				**$ 199,521.24**

GRAND TOTAL				**$ 300,057.42**

Village of Palmetto Bay, Florida • PBP and CRP – Replacement of Designated Areas of Asphalt Walking Trails • ITB No. 2025-12-010

4.1: Bid Form

ITB# 2025-12-010
PBP and CRP – Replacement of Designated Areas of Asphalt Walking Trails

Replacement of the Existing Asphalt Walkway Trails at Coral Reef Park:

Total Bid Amount..... $ 119,260
Total Bid Amount (in words) One hundred nineteen thousand two hundred sixty.
Total Sq Ft 5,963 Unit Cost Per Sq Ft $19.59

Replacement of the Existing Asphalt Walkway Trails at Palmetto Bay Park:

Total Bid Amount..... $ 216,000
Total Bid Amount (in words) Two hundred sixteen thousand
Total Sq Ft 10,830 Unit Cost Per Sq Ft $19.59

Grand Total Bid Amount.....$ 329,000
Grand Total Bid Amount (in words):

Signature of Official:
Name: Shagalov, Yehoshua
Title: Owner
Company: Construction 95 LLC
Date: 05/02/2025

The Bid Form is presented to assist the Village in evaluating the Bid. This Bid Form reflects estimated quantities for the Total Bid as described above. After award, the Village reserves the right to modify estimated quantities subject to the unit price and eliminate line items if necessary. Payment shall be made for the items listed on the Bid Form on the basis of the Work actually performed and completed. Please note that it is the responsibility of the Bidder to accurately measure to provide correct costs on the bid form.

The price listed by the Bidder shall include the total cost to complete the Work including but not limited to materials, labor, equipment, bonds, insurances, etc., as necessary to ensure proper delivery of services and product requested by the Village.

I hereby certify that I am authorized to act on behalf of the Company, individual, partnership, corporation or association making this proposal and that all statements made in this document are true and correct to the best of my knowledge. I understand and agree to be bound by the conditions contained in this ITB and shall conform with all requirements of the ITB.

4.1: Bid Form

ITB# 2025-12-010
PBP and CRP – Replacement of Designated Areas of Asphalt Walking Trails

Replacement of the Existing Asphalt Walkway Trails at Coral Reef Park:

Total Bid Amount..... $ 41,144.70
Total Bid Amount (in words) forty-one thousand one hundred forty-four and seventy cents
Total Sq Ft 5,963 Unit Cost Per Sq Ft $6.90

Replacement of the Existing Asphalt Walkway Trails at Palmetto Bay Park:

Total Bid Amount..... $ 76,314.00
Total Bid Amount (in words) seventy-six thousand three hundred fourteen dollars
Total Sq Ft 11,060 Unit Cost Per Sq Ft $6.90

Grand Total Bid Amount.....$ 117,458.70
Grand Total Bid Amount (in words):
one hundred seventeen thousand four hundred fifty-eigth and seventy cents

Signature of Official:
Name:
Javier Rodriguez
Title: President
Company: Dekora, LLC
Date: 05/12/2025

The Bid Form is presented to assist the Village in evaluating the Bid. This Bid Form reflects estimated quantities for the Total Bid as described above. After award, the Village reserves the right to modify estimated quantities subject to the unit price and eliminate line items if necessary. Payment shall be made for the items listed on the Bid Form on the basis of the Work actually performed and completed. Please note that it is the responsibility of the Bidder to accurately measure to provide correct costs on the bid form.

The price listed by the Bidder shall include the total cost to complete the Work including but not limited to materials, labor, equipment, bonds, insurances, etc., as necessary to ensure proper delivery of services and product requested by the Village.

I hereby certify that I am authorized to act on behalf of the Company, individual, partnership, corporation or association making this proposal and that all statements made in this document are true and correct to the best of my knowledge. I understand and agree to be bound by the conditions contained in this ITB and shall conform with all requirements of the ITB.

4.1: Bid Form

ITB# 2025-12-010
PBP and CRP – Replacement of Designated Areas of Asphalt Walking Trails

Replacement of the Existing Asphalt Walkway Trails at Coral Reef Park:

Total Bid Amount..... $ 327,187.21
Total Bid Amount (in words) Three hundred twenty-seven thousand one hundred eighty-seven dollars and twenty-one cents
Total Sq Ft 5,963 Unit Cost Per Sq Ft 54.87

Replacement of the Existing Asphalt Walkway Trails at Palmetto Bay Park:

Total Bid Amount..... $ $325,597.79
Total Bid Amount (in words) Three hundred twenty-five thousand five hundred ninety-seven dollars and seventy-nine cents
Total Sq Ft 9,800 Unit Cost Per Sq Ft 33.22

Grand Total Bid Amount.....$ 652,785.00
Grand Total Bid Amount (in words): Six hundred fifty-two thousand seven hundred eighty-five

Signature of Official: 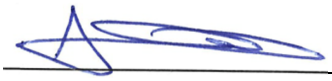
Name: Eli Alon Oami
Title: General Manager
Company: Millennium Builders LLC
Date: 05/06/25

The Bid Form is presented to assist the Village in evaluating the Bid. This Bid Form reflects estimated quantities for the Total Bid as described above. After award, the Village reserves the right to modify estimated quantities subject to the unit price and eliminate line items if necessary. Payment shall be made for the items listed on the Bid Form on the basis of the Work actually performed and completed. Please note that it is the responsibility of the Bidder to accurately measure to provide correct costs on the bid form.

The price listed by the Bidder shall include the total cost to complete the Work including but not limited to materials, labor, equipment, bonds, insurances, etc., as necessary to ensure proper delivery of services and product requested by the Village.

I hereby certify that I am authorized to act on behalf of the Company, individual, partnership, corporation or association making this proposal and that all statements made in this document are true and correct to the best of my knowledge. I understand and agree to be bound by the conditions contained in this ITB and shall conform with all requirements of the ITB.

4.1: Bid Form

ITB# 2025-12-010
PBP and CRP – Replacement of Designated Areas of Asphalt Walking Trails

Replacement of the Existing Asphalt Walkway Trails at Coral Reef Park:

Total Bid Amount..... $ 47,437.48
Total Bid Amount (in words) FORTY SEVEN THOUSAND FOUR HUNDRED THIRTY SEVEN DOLLARS AND FORTY EIGHT CENTS
Total Sq Ft 5,963 Unit Cost Per Sq Ft $7.96

Replacement of the Existing Asphalt Walkway Trails at Palmetto Bay Park:

Total Bid Amount..... $ 77,173.28
Total Bid Amount (in words) SEVENTY SEVEN THOUSAND ONE HUNDRED SEVENTY THREE DOLLARS AND TWENTY-EIGHT CENTS
Total Sq Ft 9,730 Unit Cost Per Sq Ft $7.93

Grand Total Bid Amount.....$ 124,610.76
Grand Total Bid Amount (in words):
ONE HUNDRED TWENTY-FOUR THOUSAND SIX HUNDRED TEN DOLLARS AND SEVENTY-SIX CENTS

Signature of Official:
Name: Joseph A. Perez
Title: President
Company: PHOENIX CONCRETE PLUS, INC.
Date: 05/15/2025

The Bid Form is presented to assist the Village in evaluating the Bid. This Bid Form reflects estimated quantities for the Total Bid as described above. After award, the Village reserves the right to modify estimated quantities subject to the unit price and eliminate line items if necessary. Payment shall be made for the items listed on the Bid Form on the basis of the Work actually performed and completed. Please note that it is the responsibility of the Bidder to accurately measure to provide correct costs on the bid form.

The price listed by the Bidder shall include the total cost to complete the Work including but not limited to materials, labor, equipment, bonds, insurances, etc., as necessary to ensure proper delivery of services and product requested by the Village.

I hereby certify that I am authorized to act on behalf of the Company, individual, partnership, corporation or association making this proposal and that all statements made in this document are true and correct to the best of my knowledge. I understand and agree to be bound by the conditions contained in this ITB and shall conform with all requirements of the ITB.

4.1: Bid Form

ITB# 2025-12-010
PBP and CRP – Replacement of Designated Areas of Asphalt Walking Trails

Replacement of the Existing Asphalt Walkway Trails at Coral Reef Park:

Total Bid Amount..... $ 100,536.20
Total Bid Amount (in words) One hundred thousand five hundred thirty six dollars and twenty cents
Total Sq Ft 5,963.00 Unit Cost Per Sq Ft $16.86

Replacement of the Existing Asphalt Walkway Trails at Palmetto Bay Park:

Total Bid Amount..... $ 199,521.20
Total Bid Amount (in words) One hundred ninety nine thousand five hundred twenty one dollars and twenty cents
Total Sq Ft 11,834.00 Unit Cost Per Sq Ft $16.86

Grand Total Bid Amount.....$ 300,057.40
Grand Total Bid Amount (in words):
Three hundred thousand fifty seven dollars and forty cents

Signature of Official:
Name:
Guillermo Villanueva
Title: Vice President
Company: V&G Construction Solutions, Corp.
Date: 05-13-2025

The Bid Form is presented to assist the Village in evaluating the Bid. This Bid Form reflects estimated quantities for the Total Bid as described above. After award, the Village reserves the right to modify estimated quantities subject to the unit price and eliminate line items if necessary. Payment shall be made for the items listed on the Bid Form on the basis of the Work actually performed and completed. Please note that it is the responsibility of the Bidder to accurately measure to provide correct costs on the bid form.

The price listed by the Bidder shall include the total cost to complete the Work including but not limited to materials, labor, equipment, bonds, insurances, etc., as necessary to ensure proper delivery of services and product requested by the Village.

I hereby certify that I am authorized to act on behalf of the Company, individual, partnership, corporation or association making this proposal and that all statements made in this document are true and correct to the best of my knowledge. I understand and agree to be bound by the conditions contained in this ITB and shall conform with all requirements of the ITB.

Invitation to Bid

Village of Palmetto Bay
9705 East Hibiscus Street
Palmetto Bay, Florida 33157

TITLE:

PBP and CRP – Replacement of Designated Areas of Asphalt Walking Trails

ITB NO.:

2025-12-010

DUE DATE:

Friday, May 16th, 2025, on or before 11:00 a.m. EST (Municipal Building)

ISSUED: **Tuesday, April 29th, 2025**

CONTACT PERSON:

Procurement Specialist
Alessia Bencomo
Finance Department – Procurement Division
abencomo@palmettobay-fl.gov

TABLE OF CONTENTS

SECTION 1.0 ADVERTISEMENT	3
SECTION 2.0 INTRODUCTION	4
SECTION 3.0 TERMS AND CONDITIONS	5 - 14
SECTION 4.0 SCOPES OF SERVICES	15 – 17
SECTION 5.0 BID SUBMISSION REQUIREMENTS	18
SECTION 6.0 EVALUATION AND SELECTION CRITERIA	19
SECTION 7.0 SCHEDULES OF EVENTS	20 - 21
SECTION 8.0 REQUIRED BID SUBMITTAL FORMS	22 - 42
SECTION 9.0 OTHER FORMS	43 - 57
SECTION 10.0 EXHIBITS	58 - 68
AGREEMENT	69
Exhibit “A”: PBP Walkway Repair Replacement	70
Exhibit “B”: PBP Walkway Repair Replacement	70
Exhibit “C”: CRP Designated Areas of Asphalt Trail	70
Exhibit “D”: Biobarrier Root Control System	70

SECTION 1.0: Advertisement

INVITATION TO BID (ITB)
PBP and CRP – Replacement of Designated Areas of Asphalt Walking Trails
No. 2025-12-010

The Village of Palmetto Bay is seeking a qualified Company for replacement of the designated areas of asphalt walkways/trails within Palmetto Bay Park located at 17535 SW 95th Avenue, Palmetto Bay, Florida 33157, and Coral Reef Park located at 7895 SW 152nd Street, Palmetto Bay, Florida 33157. The Village will **receive sealed bids no later than 11:00 a.m.** on or before **Friday, May 16th, 2025** (late submittals, email submittals, and facsimile submissions will not be accepted) **by the Village Clerk at the Municipal Center located at 9705 East Hibiscus Street, Palmetto Bay, Florida 33157**. All bids received will be publicly opened and read aloud on said date and time before the Procurement Specialist.

To be considered, all interested Parties must request copies of the bid documents and submit one (1) original, one (1) copy of the required information and documents, and a flash drive containing a copy of the entire original submission in one (1) sealed package clearly marked with the bid titled "**PBP and CRP – Replacement of Designated Areas of Asphalt Walking Trails ITB# 2025-12-010**". **THE PACKAGE MUST BE CLEARLY LABELED TO THE ATTENTION OF THE VILLAGE CLERK, INCLUDING THE PACKAGE TITLE**. A bid guaranty in the amount of five percent (5%) of the bid must accompany each bid in accordance with the Invitation to Bid (ITB). The respondent shall bear all costs associated with the preparation and submission of the response to the solicitation.

A non-mandatory pre-bid meeting is scheduled for **Wednesday, May 7th, 2025, at 11:00 a.m.** at the Village Municipal Center at 9705 E. Hibiscus Street, Palmetto Bay, FL 33157. The bid documents may be obtained on or after **Tuesday, April 29th, 2025**. The bid document can be obtained by visiting our website www.palmettobay-fl.gov and by clicking Bids & RFP's. If you cannot download the documents please contact Alessia Bencomo, Procurement Division, abencomo@palmettobay-fl.gov.

No bid shall be withdrawn after the opening of the bid without the consent of the Village for a period of sixty (60) days after the scheduled time of opening and reading bids. The Village reserves the right to reject any and all bids or parts thereof, to terminate the process at any time, rebid the Project, waive any informalities, technicalities or irregularities, to disregard all non-conforming, conditional or counter-bids, to award in whole or in part to one or more respondents, or take any other such actions that may be deemed in the best interest of the Village.

SECTION 2.0: Introduction

VILLAGE OF PALMETTO BAY ("Village")

PBP and CRP – Replacement of Designated Areas of Asphalt Walking Trails (the "Project")

The purpose of this bid is to secure a qualified Company for replacement of the designated areas of asphalt walkways/trails within Palmetto Bay Park located at 17535 SW 95th Avenue, Palmetto Bay, Florida 33157, and Coral Reef Park located at 7895 SW 152nd Street, Palmetto Bay, Florida 33157. Bidders are asked to measure and confirm for determination of submittal. Walkability is affected on portions of existing walkways, as tree roots have cracked and/or lifted the asphalt, creating unacceptable trip hazards. The end result of this project is expected to be safe, unable walkways with long-term reliability.

SECTION 3.0: Terms and Conditions for Receipt of Bids

3.01 Requirement to Meet All Provisions

Each Company submitting a bid shall meet the terms and conditions of the ITB specifications package to the satisfaction of the Village. By virtue of the bid submittal, the Bidder acknowledges and agrees with and accepts all provisions of the ITB specifications. Terms used in these Instructions to Bidders which are defined in the Standard General Conditions of the Construction Contract, NSPE-ACEC Document 1910-8, CSI 56465 (1996 Edition) have the meanings assigned to them in the General Conditions. The term "Successful Bidder" means the lowest, responsive, qualified, responsible Bidder to whom the Village, on the basis of Owner's evaluation as hereinafter provided, makes an award and whose bid the Village determines is in the best interests of the Village.

3.02 Errors and Omissions in ITB

Bidders are responsible for reviewing all portions of this ITB, including all terms of the ITB and requirements of the Village's Procurement Code. Complete sets of Bidding Documents shall be used in preparing Bids; neither the Village nor the Engineer assumes any responsibility for errors or omissions resulting from the Bidder's review of the Bidding Documents. Bidders are to promptly notify the Village's Procurement Specialist, in writing, if the Bidder discovers any ambiguity, discrepancy, omission, or error in the ITB or required forms. Any such notification should be directed in writing promptly after discovery, but in no event later than six (6) calendar days prior to the date for receipt of bids. Modifications and clarifications will be made by addenda as provided below.

Examination of Site

3.02.1 Before submitting a Bid, each Bidder must (a) examine the Contract Documents, Project Specifications and Drawings thoroughly to its full satisfaction and have undertaken the responsibility to determine, within the scope of Bidder's competence as a licensed General Contractor, that the Project Specifications and Drawings are fit and proper for the performance of the Work and to the best of Bidder's knowledge are: (i) free from material errors, omissions, and/or inconsistencies; and (ii) are in compliance with applicable laws, statutes, building codes, ordinances, rules and regulations; recognizing however, that a Bidder is not responsible for the design of the Project; (b) visit the site to become familiar with local conditions that may in any manner affect cost, progress or performance of the Work; (c) examine the Project Site to its full satisfaction, including any existing work or improvements in place, and have determined that the same are fit and proper to receive the Work in their present condition and a Bidder waives all claims that they are not in compliance with all data and information with respect to the Project as specified in the Drawings and Project Specifications and/or as provided by Owner and Engineer; (d) familiarize itself with federal, state and local laws, ordinances, rules, policies, and regulations that may in any manner affect cost, progress or performance of the Work; (e) study and carefully correlate Bidder's observations with the Contract Documents; and (f) at Bidder's own expense, make or obtain any additional examinations, investigations, explorations, tests and studies, and obtain any additional information and data which pertain to the physical conditions including but not

limited to surface, sub-surface and underground facilities at or contiguous to the Project site or otherwise which may affect cost, progress, performance or furnishing of the Work and which Bidder deems necessary to determine for its Bid for performing and furnishing the Work in accordance with the time, price and other terms and conditions of the Contract Documents.

3.02.2 Reference is made to the Supplementary Conditions for the identification of those reports of investigations and tests of subsurface and latent physical conditions at the site or otherwise affecting cost, progress or performance of the Work which have been relied upon by Engineer in preparing the Drawings and Specifications. The Village will make copies of such reports available to any Bidder requesting them. These reports are not guaranteed as to accuracy or completeness, nor are they part of the Contract Documents. Before submitting the Bid, each Bidder will, at its own expense, make such additional investigations and tests as the Bidder may deem necessary to determine his Bid for performance of the Work in accordance with the time, price and other terms and conditions of the Contract Documents.

3.02.3 On request, the Village will provide each Bidder access to the site to conduct such investigations and tests as each Bidder deems necessary for submission of its Bid.

3.02.4 The property upon which the Work is to be performed, includes rights-of-way for access thereto and other property designated for use by Contractor in performing the Work, are identified in the Supplementary Conditions, General Conditions Drawings.

3.02.5 The submission of a Bid will constitute a binding representation by the Bidder that he has complied with every requirement of the Contract Documents and that the Contract Documents are sufficient in scope and detail to indicate and convey understanding of all terms and conditions for performance of the Work.

3.03 Inquiries Regarding ITB

Inquiries regarding the ITB, including requests for clarification of the ITB, must be in writing. With respect to questions about the meaning or intent of the Project Specifications or Drawings, all questions shall be submitted in writing to the Village within seventy-two (72) hours after the receipt of the Project Specifications or Drawings. Failure to submit written questions regarding the Project Specifications or Drawings must be made within seventy-two (72) hours of receipt of the Project Specifications or Drawings shall constitute a waiver of all claims associated therewith.

All inquiries shall only be directed to:

Alessia Bencomo
Procurement Specialist
Finance Department
9705 E. Hibiscus Street
Palmetto Bay, FL 33157
Email: abencomo@palmettobay-fl.gov

Oral information is not binding, or the Bidder shall be deemed to have waived all claims regarding the Project. Only questions answered by written addenda will be binding, as set forth in 3.04 below, and may supersede terms in this solicitation. Replies will be issued by Addenda mailed or delivered to all Parties recorded by the Village as having received the bidding documents.

Inquiries must be received by Tuesday, May 13th, 2025, no later than 3:00 p.m. The Addendum will be posted by Tuesday, May 13th, 2025, no later than 5:00 p.m. on DemandStar.

3.04 Addenda to ITB

The Village may modify or clarify the ITB, prior to the submittal due date, by issuing written addenda. Addenda will be sent via email to the last known address of each Company having received a copy of the ITB for bidding purposes. The Village will make reasonable efforts to notify bidders in a timely manner of modifications to the ITB. Notwithstanding this provision, bidders shall be responsible for ensuring that its submittal reflects any and all addenda issued by the Village prior to the submittal due date regardless of when the bid is submitted. Each bidder should acknowledge receipt of any addenda by so indicating in their bid submission. Each bidder acknowledges receipt of any addenda and is responsible for the contents of the addenda and any changes made to the bid. Failure to acknowledge any addenda may cause the bid to be rejected.

3.05 Bid Withdrawal and Opening

A Bidder may withdraw its bid, without prejudice prior to the time specified for the bid opening, by submitting a written request to the Village Clerk for its withdrawal, in which event the proposal will be returned unopened. No bid can be withdrawn within the ninety (90) day period which occurs after the time is set for the bid closing. A bidder who withdraws its bid prior to the ninety (90) day period may still submit another bid if done in accordance within the proper time frame. If the bidder chooses to withdraw their bid after the bidder has been granted the award, there will be fees and costs owing to the Village that will be incurred as a violation of late withdrawal. Fees will include out of pocket costs that the Village incurred through the process of approval. All bids will be opened and declared publicly. A bidder and/or its representative are invited to be present at the opening of the bid.

3.06 Revision of Bids

At any time during the submittal evaluation process, the Village may require a bidder to provide written clarification of its submittal.

3.07 Reservations of Rights by the Village

The issuance of this ITB does not constitute an agreement by the Village that any award will be issued by the Village. The Village expressly reserves the right at any time to:

- Waive or correct any defect or informality in any response, bid, or bid procedure;
- Reject any or all submittals;
- Reissue an ITB;

- Prior to submission deadline for submittals, modify all or any portion of the selection procedures, including deadlines for accepting responses, services to be provided under this ITB, or the requirements for contents or format of the submittals;
- Bids received after the deadline will not be considered.
- Any late withdrawal from a bidder that was granted award but declined, the Village has the right to award to the second highest bidder.

3.08 No Waiver

No waiver by the Village of any provision of this ITB shall be implied from any failure by the Village to recognize or act on account of any failure by a bidder to observe any provision of this ITB.

3.09 Cone of Silence

Pursuant to Section 2-138 of the Village Code, all procurement solicitations once advertised and until a written award recommendation has been forwarded by the Village Manager to the Village Council, are under the "Cone of Silence." The Cone of Silence ordinance is available at https://www.municode.com/library/#!/fl/palmetto_bay/codes/code_of_ordinances?nodeId=COOR_CH2AD_ARTVOFEM_DIV2COINCOET_S2-138COSI. Any communication regarding this bid shall be made in accordance with the Cone of Silence, the entirety of which is incorporated as if fully set forth herein. Communication between a potential bidder and the Procurement Specialist regarding this bid is exempt from the Cone of Silence, provided that the communication is limited strictly to matters of process or procedure already contained in the solicitation document.

3.10 Submittal and/or Presentation Costs

The Village assumes no responsibility or liability for costs incurred by the bidder prior to the execution of a contract, including but not limited to costs incurred as a result of preparing a response to this ITB.

Bidders are expected to examine the specifications, delivery schedules, bid prices and extensions and all instructions and failure to do so will be at the bidders own risk.

3.11 Certification

The bidder must sign all the required forms included under Section 8.0:

1. Drug-Free Workplace Certification
2. Sub-contractor List
3. Governmental References
4. Acknowledgment, Warranty, and Acceptance
5. Non-Collusive Affidavit
6. Sworn Statement on Public Entity Crimes
7. Disability Nondiscrimination Statement
8. Business Entity Affidavit
9. Conformance with OSHA Standards

10. Anti-Kickback Affidavit
11. Statement of Past Contract Disqualifications
12. E-Verify Affidavit
13. Foreign Country of Concern Attestation
14. Affidavit Attesting to Noncoercive Conduct for Labor or Services

3.12 Public Records

Florida law provides that municipal records should be open for inspection by any person under Chapter 119, Florida Statutes, the Public Records law. All information and materials received by the Village in connection with responses shall become property of the Village and shall be deemed to be public records subject to public inspection after the award is issued.

3.13 Retention of Responses

The Village reserves the right to retain all Responses submitted.

3.14 Insurance/Bonds

1. Upon Village's notification of award, the bidder shall furnish to the Procurement Division, Certificates of Insurance that indicate that insurance coverage has been obtained which meets the requirements as outlined below; **and name the Village as an additional insured.**

- Comprehensive General Liability - $1,000,000 combined single limit for each occurrence for bodily injury and property damage – designating the Village as Additional Insured
- Workers Compensation - Statutory Limits
- Automobile Liability - $1,000,000 per occurrence for all claims arising out of bodily injuries or death and property damages.

All insurance policies must be issued by companies authorized to do business under the laws of the State of Florida. The companies must be rated no less than "B+" as to management and no less than "Class V" as to strength by the latest edition of Best's Insurance guide, published by A.M. Best Company, Olwick, New Jersey, or its equivalent.

Certificates of Insurance must indicate that for any cancellation of coverage before the expiration date, the issuing insurance carrier will mail a thirty (30) day written advance notice to the certificate holder.

In addition, the Company hereby agrees not to modify the insurance coverage without thirty (30) day written advance notice to the Village subject to the Village's approval.

Compliance with the foregoing requirements shall not relieve the bidder of this liability and obligation under this section or under any other section in the Contract.

If the insurance certificate is received within the specified time frame but not in the manner prescribed, the bidder shall be notified of such deficiency and shall have an additional five (5) calendar days to submit a corrected certificate to the Village. If the bidder fails to submit the required insurance documents in the manner prescribed in the Contract within five (5) calendar days after Village notification to comply, the bidder shall be in default of the contractual terms and conditions and award of the Contract will be rescinded, unless such time frame for submission has been extended by the Village.

The bidder shall be responsible for assuring that the insurance certificates required in conjunction with this Section remain in force for the duration of the contractual period of the Contract, including any and all option years or extension periods that may be granted by the Village. If insurance certificates are scheduled to expire during the contractual period, the bidder shall be responsible for submitting new or renewed insurance certificates to the Village at a minimum of thirty (30) calendar days in advance of such expiration. In the event that expired certificates are not replaced with new or renewed certificates which cover the contractual period, the Village shall suspend the Contract until such time as the new or renewed certificates are received by the Village in the manner prescribed herein; provided, however, that this suspended period does not exceed thirty (30) calendar days. Thereafter, the Village may, at its sole discretion, terminate this contract.

3.15 Accounting

Please note that failure to provide a detailed invoice could result in delay of payment and include termination of any Contract.

Invoices, unless otherwise indicated, must show purchase order number, and shall be submitted to the Village of Palmetto Bay, Public Service Office, 9495 SW 180th Street, Palmetto Bay, FL 33157.

3.16 Statement of Contract Disqualifications

Each bidder shall submit a statement regarding any past government disqualifications on the form provided in the ITB package.

3.17 Submittal of One Bid Only

No individual or business entity shall be allowed to make more than one bid, or to be interested in more than one bid.

3.18 Exceptions to Specifications

Exceptions to these specifications shall be listed and explained on a separate page titled “Exceptions to Specifications”. This page shall then be attached and submitted at the same time as the bid. Each exception must refer to the page number and paragraph to which it is relevant. The nature and reasoning of each exception, including what, if any, alternative is being offered, shall be explained in its entirety. The Village, at its sole and absolute discretion, may accept or reject any or all exceptions and alternatives. Where exceptions and alternatives are rejected, the Village shall require the bidder to comply with the particular term and/or condition of the bid to which the bidder took exception. Failure to comply may be cause for rejection of the bid.

3.19 Non-Appropriation of Funds
The Village reserves the right to terminate in whole or in part the Contract in the event that sufficient funds to complete the Contract are not appropriated by the Village.

3.20 Property of the Village
All discoveries and documents produced as a result of any service or project undertaken on behalf of the Village shall become the property of the Village.

3.21 Contract Time
The number of days within which, or the date by which, the Work is to be completed is included in the Contract. Time is of the essence regarding all terms and conditions in the Contract.

3.22 Liquidated Damages
The bidder and the Village recognize that time is of the essence of this Contract and that the Village will suffer financial loss and other damages if the Work is not substantially or finally complete within the time specified in the Contract. The bidder also recognize the expense and difficulties involved in a legal or arbitration proceeding. The bidder acknowledges and agrees that the actual damages which the Village will suffer in the event of delay in achieving Substantial Completion or Final Completion of the Work are difficult, if not impossible, to determine and that the liquidated damages described are a fair and reasonable estimate of the delay damages which the Village is expected to suffer in the event of such delay. Accordingly, as actual damages cannot be ascertained, the bidder and the Village agree that as liquidated damages for delay, but not as a penalty, the bidder shall pay the Village the amount of One Thousand and 00/100 Dollars ($1,000.00) for each day after the time specified in the Documents for Substantial Completion until the Work is substantially complete.

Liquidated damages shall be deducted from the bidder's applications for payment. However, if at the time of the bidder's final application for payment, the bidder is owed insufficient amounts to fully cover the deduction for liquidated damages, then the bidder shall pay the amount due within ten (l0) days of written demand by the Village.

3.23 Litigation
Bidders shall describe any prior or pending litigation or investigation, either civil or criminal, involving a governmental agency or which may affect the performance of the services to be rendered in which the bidder, any of its employees, or subcontractors has been involved in within the last three (3) years.

3.24 Subcontractors
If the bidder intends on Subcontracting out all or any portion of the of the Project, the name of the proposed Subcontracting companies must be clearly disclosed in the bid. Following the award of the contract, no additional sub-contracting will be allowed without the prior written consent of the Village.

In order that the Village may be assured that only qualified and competent Subcontractors will be employed on the Project, each Bidder shall submit with the Bid a list of the Subcontractors who will perform the work for each division of the Project Specifications as indicated on the "List of Subcontractors" form contained within the Bid Form. The Bidder shall have determined to its own complete satisfaction that a listed Subcontractor has been successfully engaged in its particular type of business for a reasonable length of time, has successfully completed installations comparable to that which is required by the Contract Documents and is qualified both technically and financially to perform that pertinent phase of the Work for which it is listed. Only one Subcontractor shall be listed for each division of the Work. The "List of Subcontractors" shall be accompanied by an experience statement with pertinent information as to similar projects and other evidence of qualification, with all applicable licenses, registration or certification numbers noted on the Bid Form opposite its name for each such Subcontractor, person, and organization. No change shall be made to the "List of Subcontractors" after submission of the Bid, unless agreed to in writing by the Village. The Village may make a determination regarding the responsibility and qualifications of each Subcontractor. To demonstrate qualifications to perform the Work, each Subcontractor must be prepared to submit, within five (5) days of Village's request, written evidence of the types set forth in the Request for Letter of Interest, such as financial data, previous experience, licensing, certification, and evidence of authority to conduct business in the Village. If the Village after due investigation has reasonable objection to any proposed Subcontractor the Village before giving the Notice of Intent to Award, shall request the apparent successful bidder to submit an acceptable substitute without an increase in the Bid Price. If the apparent successful bidder declines to make any such substitution, the Contract shall not be awarded to such bidder and the Bid Guaranty of that bidder shall be forfeited. Any Subcontractor so listed and to whom the Village does not make written objection prior to the giving of the Notice of Intent to Award will be deemed acceptable. Failure to provide the "List of Subcontractors" shall result in the bid being deemed non-responsive.

If the Contract Price is on the basis of Cost-of-the-Work Plus a Fee or GMP, the eventual successful bidder, prior to the Notice of Intent to Award, shall identify in writing those portions of the Work that such bidder proposes to subcontract and after the Notice of Intent to Award may only subcontract other portions of the Work with the Villages written consent.

3.25 Indemnification

The bidder shall indemnify, defend and hold harmless the Village and its officers, employees, agents and instrumentalities from any and all liability, losses or damages, including attorneys' fees and costs of defense at both trial and appellate levels, in which the Village or its officers, employees, agents or instrumentalities may incur as a result of claims, demands, suits, causes of actions or proceedings of any kind or nature arising out of, relating to or resulting from the performance of this Contract by the bidder or its employees, agents, servants, partners, principals or subcontractors. The bidder shall pay all claims and losses in connection therewith and shall investigate and defend all claims, suits or actions of any kind or nature in the name of the Village, and shall pay all costs, judgments, and attorney's fees at both trial and appellate levels which may issue as a result of the bidder's negligence. The bidder expressly understands and agrees that any insurance required by this

Contract or otherwise provided by the bidder shall in no way limit the responsibility to indemnify, hold harmless and defend the Village or its officers, employees, agents, and instrumentalities. One Percent (1%) of the Contract amount shall represent the consideration to be provided for this Indemnification. Nothing contained herein shall be deemed a waiver of Sovereign Immunity provided to the Village under Section 768.28, Florida Statutes.

3.26 Quality

All materials used for the manufacture or construction of any supplies, materials or equipment covered by this ITB shall be new and be the latest model, of the best quality, and of the highest-grade workmanship. The Proposer, in addition to any warranties provided by the manufacturer of the materials, shall provide warranties of **MERCHANTIBILITY AND FITNESS FOR A PARTICULAR PURPOSE.**

3.27 Protests, Appeals and Disputes

The procedures and requirements for bid protests, appeals and disputes are set forth in the Village Code, Sec. 2-175 (o) – (p), the provisions of which are hereby incorporated as if fully set forth herein, which may be found on www.municode.com: https://www.municode.com/library/#!/fl/palmetto_bay/codes/code_of_ordinances?nodeId=COOR_CH2AD_ARTVIFI_DIV2PRCO_S2-175PRPR

3.28 Force Majeure

The performance of any act by the Parties may be delayed or suspended at any time while, but only so long as either Party is hindered in or prevented from performance by acts of God, the elements, war, rebellion, strikes, lockouts or any cause beyond the reasonable control of such Party, provided however, the Village shall have the right to provide substitute service from third parties or Village personnel and in such event the Village shall withhold payment due for such period of time. If the condition of force majeure exceeds a period of fourteen (14) days the Village may, at its option and discretion, cancel or renegotiate the Contract.

3.29 Work Delays

Should the work be obstructed or delayed required to be done by approved changes in the work or by any default, act, or omission of the Village, or by strikes, fire, earthquake, hurricane, or any other Act of God, or by the inability to obtain materials, equipment, or labor due to local, State or federal government restrictions, then the time of completion may, at the Village's sole option, be extended for such periods as may be agreed upon by the Parties. In the event that there is insufficient time to grant such extensions prior to the completion date of the Contract, the Village Manager may, at the time of acceptance of the work, waive liquidated damages that may have accrued for failure to complete on time, due to any of the above.

3.30 Bid Guaranty

The bid must be accompanied by a bid guaranty in the form of a certified check payable to the Village of Palmetto Bay or a Bid Bond (form attached) in the amount of not less than five percent

(5%) of the total amount of the bid, issued by a properly licensed surety company. For contracts not exceeding fifty thousand dollars and zero cents ($50,000.00) a bid guaranty is not required.

The Bid Guaranty will be retained until the Parties have executed the Contract and furnished the required Contract Security, whereupon it will be returned; if the successful bidder fails to execute, deliver and furnish the required guaranty within fifteen (15) days of the Notice of Intent to Award, Village may annul the Notice of Intent to Award and the Bid Security of that Bidder shall be forfeited.

3.31 PERFORMANCE AND PAYMENT BONDS

Within ten (10) days of the award of contract, there shall be placed surety bonds, each in the amount of One Hundred percent (100%) of the contract price, and issued by a properly licensed surety company acceptable to the Village. All bonds must be issued by an agent of broker licensed in the State of Florida and authorized to do business under the laws of the State of Florida. The bonds should provide that the surety's liability will be co-extensive with the Contractor's liability, and should contain a provision that the surety waives notice of changes to the contract, including, but not limited to, changes in the times for performance. For contracts not exceeding fifty thousand dollars and zero cents ($50,000.00) a surety bond is not required.

a. A Performance and One-Year Warranty Bond covering the faithful performance of the contract and a one-year warranty on labor from the date of final acceptance of the work.
b. A Labor Payment Bond

SECTION 4.0: Scope of Services

4.01 Scope of Work

The Village is seeking the services of an experienced Company for replacement of the existing asphalt walkway trails at designated locations as indicated below. This walkway is negatively impacted by tree roots cracking and lifting the walkway, which will require the following:

- Demo existing asphalt and excavate a minimal fifteen inches (15") below the ground surface.
- Removal/disposal of all excavated material; cutting away of all visible roots intruding on path from beneath or sides.
- Installation of a layer of BIOBARRIER Root Control System (see Exhibit "D") on the excavated floor and walls of the subject trails, and collared a minimum six inches (6") at ground level from the trail wall outward
- Installation/compaction of new subbase lime rock sufficient to ensure that addition of asphalt hot mix overlay of a minimum one and half (1 ½) thick effectuates a new walkway level with existing walkways/surrounding ground.
- Work under this contract shall consist of all equipment, materials, supplies and manufactured articles and for performing all labor, work or other operations required for the fulfilment of the contract in strict accordance to the contract documents.
- The successful bidder shall be responsible to provide necessary barricades and signage to safeguard the general public. The Village shall provide public services/social media announcements of the work and anticipated timeframe. The Village will also remove applicable bollards currently used to prevent vehicular access into the park to create the Company's entry point.
- The successful bidder shall be responsible for the overall safeguarding of the areas of work, and schedule and conduct the work in a manner which shall not interfere with scheduled events and activities; and shall not cause annoyance to residents in close proximity to the project.
- It shall be the sole responsibility of the Company to dispose of all construction debris at an authorized landfill and all costs incurred shall be borne by the Company.
- The Company shall be required to obtain all necessary permits from any and all necessary agencies; and shall include said cost in quote offered. Additionally, the Company shall be responsible for obtaining a bond if the bid price exceeds Fifty Thousand Dollars and Zero Cents ($50,000.00).
- The Company shall warranty the work for a period of five (5) years and agrees to repair and/or replace asphalt areas with visible signs of cracking or uplifting during this warranty period.

Palmetto Bay Park:

- Designated areas of asphalt trail include (as depicted on Exhibit “A” & “B”):

    A. The entire trail paralleling SW 94th Avenue, approximately one thousand three hundred ninety (1390) linear feet in length and six to seven (6-7) feet in width; beginning at the golf cart entrance to the park south to where asphalt meet concrete sidewalk.

    B. Beginning where the asphalt meets the 180th Street sidewalk at the park's southern entrance adjacent to private residence, going north to specific areas indicated as 'feet from start'.

72'
134'
374'
607-627'
1145-1159'
1229-1286'
1576-1610'
1622-1632'

Coral Reef Park:

- Designated areas of asphalt trail include (as depicted on Exhibit “C”):

    A. A total of approximately five thousand nine hundred sixty-three (5,963) square feet at eighteen (18) locations as identified in red on attached map of park; and physically marked in orange paint with arrows of pathways.

4.1: Bid Form

ITB# 2025-12-010
PBP and CRP – Replacement of Designated Areas of Asphalt Walking Trails

Replacement of the Existing Asphalt Walkway Trails at Coral Reef Park:

Total Bid Amount..... $ _____
Total Bid Amount (in words) _____
Total Sq Ft _____ Unit Cost Per Sq Ft _____

Replacement of the Existing Asphalt Walkway Trails at Palmetto Bay Park:

Total Bid Amount..... $_____
Total Bid Amount (in words) _____
Total Sq Ft _____ Unit Cost Per Sq Ft _____

Grand Total Bid Amount.....$_____
Grand Total Bid Amount (in words):
_____
_____

Signature of Official: _____
Name:
_____
Title: _____
Company: _____
Date: _____

The Bid Form is presented to assist the Village in evaluating the Bid. This Bid Form reflects estimated quantities for the Total Bid as described above. After award, the Village reserves the right to modify estimated quantities subject to the unit price and eliminate line items if necessary. Payment shall be made for the items listed on the Bid Form on the basis of the Work actually performed and completed. Please note that it is the responsibility of the Bidder to accurately measure to provide correct costs on the bid form.

The price listed by the Bidder shall include the total cost to complete the Work including but not limited to materials, labor, equipment, bonds, insurances, etc., as necessary to ensure proper delivery of services and product requested by the Village.

I hereby certify that I am authorized to act on behalf of the Company, individual, partnership, corporation or association making this proposal and that all statements made in this document are true and correct to the best of my knowledge. I understand and agree to be bound by the conditions contained in this ITB and shall conform with all requirements of the ITB.

Section 5.0: Bid Submission Requirements

BID SUBMITTAL CHECKLIST

In order to be responsive, the bidder must submit the following items:

A. **One (1) sealed envelope which includes:** One (1) original, one (1) copy of the required information and documents, and a flash drive of your submittal no later than 11:00 a.m. EST May 16th, 2025.

Please be sure that if the package is mailed through FedEx, UPS, USPS, etc., that the package is addressed/labeled to the below department and address. The bid inside the package should also be addressed/labeled to the below department and address.

Village of Palmetto Bay
Village Clerk's Office
9705 E. Hibiscus Street
Palmetto Bay, FL, 33157

B. **Signed and completed forms from *Section 8*:**

Introduction letter with contact information
Years in Business
Lead team Information
Bid Form
5% Bid Bond
Section 8 (Required Bid Submittal Forms)
Addendum Acknowledgement

C. **Bidders are required to acknowledge receipt of any formal Addendum by signing the Addendum and including it with the bid submission.** A Bidder's failure to include a signed formal Addendum in its bid submission may deem its bid non-responsive.

SECTION 6.0: Evaluation and Selection Criteria

Evaluation Criteria

EVALUATION OF BIDS/BIDDERS

The Village reserves the right to accept any bid, any part, or parts thereof, or to reject any and all bids. The Village reserves the right to waive minor informalities or irregularities in the bids received, to accept any bid deemed advantageous to the Village, or to reject any and all bids submitted. Conditional bids, or those which take exception to the ITB documents without prior written approval from the Village, may be considered non-responsive and may be rejected.

Award of the Contract is subject to Village Council approval. Other aspects of approval are experience, capability, necessary facilities, and financial resources to complete the Contract in a satisfactory manner within the required time.

The Village has the right during the evaluation to contact bidders for additional essential information to complete their examination.

SECTION 7.0: Schedule of Events

The anticipated schedule for selection of Company is shown below:

Bid Phase	Date	Location	Time (If Applicable)
ITB is advertised and issued by Village	Tuesday, April 29th, 2025	Posted on the Miami's Community Newspaper and Villages' Website	
Non-Mandatory Pre-Bid Meeting	Wednesday, May 7th, 2025	Village of Palmetto Bay Municipal Center 9705 E. Hibiscus St, Palmetto Bay, FL 33157	11:00 a.m.
Last day to Submit Questions	Tuesday, May 13th, 2025	Via Email to abencomo@palmettobay-fl.gov	3:00 p.m.
Addendum Posting	Tuesday, May 13th, 2025	Posted on DemandStar	5:00 p.m.
Bid Submission Date	Friday, May 16th, 2025	Village of Palmetto Bay Municipal Center **ATTENTION TO THE VILLAGE CLERK** 9705 E. Hibiscus Street Palmetto Bay, Florida 33157	11:00 a.m.

7.01 Contract Award

A. Competency and Responsibility of Company
The Village reserves full discretion to determine the competence and financial status, of the bidder. The bidder will provide, in a timely manner, all information that the Village deems necessary to make such a decision.

B. Contract Requirement
The bidder to whom award is made shall execute a written Contract with the Village after notice of award. The Contract shall be made in the form adopted by the Village Attorney and a draft is included in this Request.

D. Insurance Requirements
The bidder shall provide proof of insurance in the form, coverages and amounts specified in 3.14 of these specifications within ten (10) calendar days after notice of Contract award as a precondition to Contract execution.

E. Business License & Tax

The bidder must have a valid Florida issued business license and tax certificate before execution of the Contract.

F. Failure to Accept Contract

The following will occur if the bidder to whom the award is made fails to enter into the Contract: the award will be annulled; any bid security will be forfeited in accordance with the special terms and conditions if a bidder's bond or security is required; and an award may be made to the next highest ranked bidder with a responsible compensation is negotiated, who shall fulfill every stipulation as if it were the party to whom the first award was made.

G. Completion of Contract

The Contract term commences after the Contract has been fully executed and the completion date is determined after all the scope of the project and the Bid Form have been completed.

SECTION 8.0: Required Bid Submittal Forms

DRUG-FREE WORKPLACE CERTIFICATION

In order to have a drug-free workplace program, a business shall:

1) Publish a statement notifying employees that the unlawful manufacture, distribution, dispensing, possession, or use of a controlled substance is prohibited in the workplace and specifying the actions that will be taken against employees for violations of such prohibition.
2) Inform employees about the dangers of drug abuse in the workplace, the business' policy of maintaining a drug-free workplace, any available drug counseling, rehabilitation, and employee assistance programs, and the penalties that may be imposed upon employees for drug abuse violations.
3) Give each employee engaged in providing the commodities or contractual services that are under Bid a copy of the statement specified in Subsection (1).
4) In the statement specified in Subsection (1), notify the employees, that, as a condition of working of the commodities or contractual services that are under Bid, the employee will abide by the terms of the statement and will notify the employee of any conviction of, or plea of guilty or nolo contendere to, any violation of Chapter 893 or of any controlled substance law of the United States or any state, for a violation occurring in the workplace no later than five (5) days after such conviction.
5) Impose a sanction on, or require the satisfactory participation in a drug abuse assistance or rehabilitation program, if such is available in the employee's community, by any employee who is so convicted.
6) Make a good faith effort to continue to maintain a drug-free workplace through implementation of this section.

As the person authorized to sign the statement, I certify that this Company complies fully with the above requirements.

Signature of Official: _____

Name (typed): _____

Title: _____

Company: _____

Date: _____

SUBCONTRACTOR LIST

The Company shall list all proposed Subcontractors to be used on this project if they are awarded the Contract.

Classification of Work	Subcontractor Name	Address	Telephone and Fax

REFERENCES

Each bid must be accompanied by a list of at least ***three (3)*** references from current customers, preferably in the public sector, which shall include all the information requested below. **The Village should not be listed as one of the references provided.**

VILLAGE OF PALMETTO BAY ▪ REFERENCE FORM

Solicitation Information: PBP and CRP – Replacement of Designated Areas of Asphalt Walking Trails
Invitation to Bid No. 2025-12-010

Name of Company: _____

To Whom it May Concern,
The above reference vendor is submitting on a proposal solicitation or use of bid that has been issued by the Village of Palmetto Bay. We require that the consultant provide written references with their bid submission and by providing you with this document the vendor is requesting that you provide the following reference information. We would appreciate you providing the information requested below as well as any other information you feel is pertinent:

Contracted Services Information:

Scope of Work: _____
_____
_____

Length of Contract: _____
Would you enter into a contract with the Company in the future? ____ Yes ____No
Were the services provided acceptable and of quality standards: ____ Yes ____ No
Was the Company responsive to your requests and resourceful with the task? ____ Yes ____ No
Did the Company keep you fully informed of any updates and/or concerns related to the contracted services? ____ Yes ____ No
If you responded no to any of the above please provide details:

_____
_____
_____

Comments:

_____
_____
_____
_____
_____

Name of Public Entity/Company:

_____

Name of Individual completing this form: _____

Signature: _____ Title: _____

Telephone: _____ Email: _____

Thank you for your support in helping us evaluate our solicitation responses.

Sincerely,

Alessia Bencomo, Procurement Specialist

ACKNOWLEDGEMENT, WARRANTY AND ACCEPTANCE

A. Company warrants that it is willing and able to comply with all applicable Village laws, rules and regulations.

B. Company warrants that they have read, understand and are willing to comply with all of the requirements of the ITB and the addendum/ addenda nos.

C. Company warrants that it will not delegate or sub-contract its responsibilities under an agreement without the prior written permission of the Council.

D. Company warrants that all information provided by it in connection with this bid is true and accurate.

E. CONTINGENCY FEE AND CODE OF ETHICS WARRANTY:

Company warrants that neither it, nor any principal, employee, agent, representative or family member has promised to pay, and Company has not, and will not, pay a fee for the amount of which is contingent upon the Village awarding this contract. Company warrants that neither it, nor any principal, employee, agent, representative has procured, or attempted to procure, this contract in violation of any of the provisions of the Village conflict of interest and code of ethics ordinances. Further, Company acknowledges that a violation of this warranty will result in the termination of the contract and forfeiture of funds paid, or to be paid, to the Company, if the Company is chosen for performance of the contract.

Signature of Official: _____

Name (typed): _____

Title: _____

Company: _____

Date: _____

.

NON-COLLUSIVE AFFIDAVIT

STATE OF FLORIDA }
} SS:
COUNTY OF MIAMI-DADE }

_____being first duly sworn, deposes and says that:

(1) He/she is the, (Owner, Partner, Officer, Representative or Agent) of: _____the Company that has submitted the attached Bid;

(2) He/she is fully informed respecting the preparation and contents of the attached Bid and of all pertinent circumstances respecting such Bid;

(3) Such Bid is genuine and is not a collusive or a sham Bid;

(4) Neither the said Company nor any of its officers, partners, owners, agents, representatives, employees or parties in interest, including this affiant, have in any way colluded, conspired, connived or agreed, directly or indirectly, with any other Company or person to submit a collusive or sham response in connection with the work for which the attached bid has been submitted, or to refrain from responding in connection with such work, or have in any manner, directly or indirectly, sought by agreement or collusion, communication, or conference with any Company or person to fix this Bid or to secure through any collusion, conspiracy, connivance, or unlawful agreement, any advantage against the Village of Palmetto Bay, or any person interested in the proposed Work;

Signed, sealed and delivered
In the presence of

Signature of Official: _____

Name (typed): _____

Title: _____

Company: _____

Date: _____

Continued Next Page

ACKNOWLEDGMENT

State of Florida

County of _____

On this _____day of, 20___, before me, the undersigned Notary Public of the State of Florida personally appeared_____ and whose name(s) is/are subscribed to the within instrument, and he/she/they acknowledge that he/she/they executed it.

WITNESS my hand and official seal

_____
NOTARY PUBLIC, STATE OF FLORIDA

SWORN STATEMENT PURSUANT TO
SECTION 287.133 (3)(a) FLORIDA STATUES, ON PUBLIC ENTITY CRIMES

THIS FORM MUST BE SIGNED AND SWORN TO IN THE PRESENCE OF A NOTARY PUBLIC OR OTHER OFFICIAL AUTHORIZED TO ADMINISTER OATHS.

1. This sworn statement is submitted to the Village of Palmetto Bay, Florida

By _____

For _____

Whose business address is: _____

And (if applicable) its Federal Employer Identification Number (FEIN) is: _____

2. I understand that a "public entity crime" as defined In Paragraph 287.133(1)(g), Florida Statutes ,and as may be amended means a violation of any state or federal law by a person with respect to and directly related to the transaction of business with any public entity or with any agency or political subdivision of any other State or of the United States, including, but not limited to, any Proposal or contract for goods or services to be provided to any public entity or an agency or any political subdivision of any other state or of the United Sates and involving antitrust fraud, theft, bribery, collusion, racketeering, conspiracy, or material misrepresentation

3. I understand that "convicted" or "conviction"" as defined in Paragraph 287.133(1)(b), Florida Statutes means a finding of guilt or a conviction of a public entity crime, with or without an adjudication of guilt, in any federal or state trial court of record relating to charges brought by indictment or information after July 1, 1989, as a result or a jury verdict, non-jury trial, or entry of a plea or guilty or nab contenders.

4. I understand that an "affiliate" as defined in Paragraph 287.133(1)(a), Florida Statutes, and means:

A. A predecessor or successor of a person convicted of a public entity crime; or
B. An entity under the control of any natural person who is active in the management of the entity and who has been convicted of a public entity crime. The term "affiliate"" includes those officers, directors, executives, partners, shareholders, employees, members, and agents who are active in the management of an affiliate. The ownership by one person of shares constituting a controlling Interest in another person, ore pooling of equipment or income among persons when not for fair market value under an arm's length agreement, shall be a prima facie case that one person controls another person. A person who knowingly enters into a joint venture with a person who has been convicted of a public entity crime in Florida during the preceding 36 months shall be considered an affiliate.

5. I understand that a "person" as defined in Paragraph 287.133(1)(e), Florida Statutes, means any natural person or entity organized under the laws or any state or of the United States with the legal power to enter into a binding contract and which Bids or applies to Bids on contracts for the provision of goods or services let by a public entity, or which otherwise transacts or applies to transact business with a public entity. The term "person" includes those officers, directors, executives, partners, shareholders, employees, members, and agents who are active in management of any entity.

Signed, sealed and delivered in the presence:

Signature of Official: _____

Name (typed): _____

Title: _____

Company Name: _____

Date: _____

ACKNOWLEDGMENT

State of Florida

County of _____

On this _____day of, 20___, before me, the undersigned Notary Public of the State of Florida personally appeared_____ and whose name(s) is/are subscribed to the within instrument, and he/she/they acknowledge that he/she/they executed it.

WITNESS my hand and official seal

_____
NOTARY PUBLIC, STATE OF FLORIDA

AMERICANS WITH DISABILITIES ACT (ADA)
DISABILITY NONDISCRIMINATION STATEMENT

THIS FORM MUST BE SIGNED AND SWORN TO IN THE PRESENCE OF A NOTARY PUBLIC OR OTHER OFFICIAL AUTHORIZED TO ADMINISTER OATHS.

This sworn statement is submitted to the VILLAGE OF PALMETTO BAY, FLORIDA

by: _____

(print individual's name and title)

for: _____

(print name of entity submitting sworn statement)

whose business address is:_____

and (if applicable) its Federal Employer Identification Number (FEIN) is: _____

I, being duly first sworn state: That the above named Company, corporation or organization is in compliance with and agreed to continue to comply with, and assure that any sub-contractor, or third party contractor under this project complies with all applicable requirements of the laws listed below including, but not limited to, those provisions pertaining to employment, provision of programs and services, transportation, communications, access to facilities, renovations, and new construction.

The American with Disabilities Act of 1990 (ADA), Pub. L. 101-336, 104 Stat 327, 42 USC 1210112213 and 47 USC Sections 225 and 661 including Title I, Employment; Title II, Public Services; Title III, Public Accommodations and Services Operated by Private entities; Title IV, Telecommunications; and Title V, Miscellaneous Provisions, and as any may be amended.

The Florida Americans with Disabilities Accessibility Implementation Act of 1993, Section 553.501-553.513, Florida Statutes:
The Rehabilitation Act of 1973, 229 USC Section 794;
The Federal Transit Act, as amended 49 USC Section 1612;
The Fair Housing Act as amended 42 USC Section 3601-3631.

Continued Next Page

Signature of Official: _____

Name (typed): _____

Title: _____

Company: _____

Date: _____

ACKNOWLEDGMENT

State of Florida

County of _____

On this _____day of, 20___, before me, the undersigned Notary Public of the State of Florida personally appeared_____ and whose name(s) is/are subscribed to the within instrument, and he/she/they acknowledge that he/she/they executed it.

WITNESS my hand and official seal

_____
NOTARY PUBLIC, STATE OF FLORIDA

BUSINESS ENTITY AFFIDAVIT

Bidder or Company hereby recognizes and certifies that no elected official, or employee of the Village of Palmetto Bay (the "Village") shall have a financial interest directly or indirectly in this transaction or any compensation to be paid under or through this transaction, and further, that no Village employee, nor any elected or appointed officer (including Village board members) of the Village, nor any spouse, parent or child of such employee or elected or appointed officer of the Village, may be a partner, officer, director or proprietor of Bidder or Company, and further, that no such Village employee or elected or appointed officer, or the spouse, parent or child of any of them, alone or in combination, may have a material interest in the Company or Bidder. Material interest means direct or indirect ownership of more than five percent (5%) of the total assets or capital stock of the Company or Bidder. Any exception to these above-described restrictions must be expressly provided by applicable law or ordinance and be confirmed in writing by Village. Further, Bidder or Company recognizes that with respect to this transaction or bid, if any Bidder or Company violates or is a party to a violation of the ethics ordinances or rules of the Village, the provisions of Miami-Dade County Code Section 2-11.1, as applicable to Village, Village Charter Section 7.6 (Lobbyist), or the provisions of Chapter 112, part III, Fla. Stat., the Code of Ethics for Public Officers and Employees and as may be amended, such Bidder or Company may be disqualified from furnishing the goods or services for which the bid or proposal is submitted and may be further disqualified from submitting any future bids or proposals for goods or services to Village.

Accordingly, Bidder or Company completes and executes the Business Entity Affidavit form below. The terms "Bidder" or "Company," as used herein, include any person or entity making a bid proposal herein to Village or providing goods or services to Village.

I, _____being first duly sworn state:

The full legal name and business address of the person(s) or entity contracting or transacting business with the Village of Palmetto Bay ("Village") are (Post Office addresses are not acceptable), as follows:

_____

Federal Employer Identification Number (If none, Social Security Number)

_____

Name of *Entity, Individual, Partners or Corporation*

_____

Doing Business As (If same as above, leave blank)

_____

Street Address Suite Village State Zip Code

Continued Next Page

OWNERSHIP DISCLOSURE AFFIDAVIT

1. If the contact or business transaction is with a corporation, the full legal name and business address shall be provided for each officer and director and each stockholder who holds directly or indirectly five percent (5%) or more of the corporation's stock. If the contract or business transaction is with a trust, the full legal name and address shall be provided for each trustee and each beneficiary. All such names and addresses are (Post Office addresses are not acceptable), as follows:

   Full Legal Name _____ Address _____ Ownership

   _____%

   _____%

   _____%

2. The full legal names and business address of any other individual (other than sub-contractors, material men, suppliers, laborers, or lenders) who have, or will have, any interest (legal, equitable, beneficial or otherwise) in the contract or business transaction with the Village are (Post Office addresses are not acceptable), as follows:

   _____

   _____

   _____

   _____

   _____

   _____

Signature of Official: _____

Name (typed): _____

Title: _____

Company: _____

Date: _____

Continued Next Page

ACKNOWLEDGMENT

State of Florida

County of _____

On this _____day of, 20___, before me, the undersigned Notary Public of the State of Florida personally appeared_____ and whose name(s) is/are subscribed to the within instrument, and he/she/they acknowledge that he/she/they executed it.

WITNESS my hand and official seal

_____
NOTARY PUBLIC, STATE OF FLORIDA

ACKNOWLEDGMENT OF CONFORMANCE
WITH OSHA STANDARDS

To the Village of Palmetto Bay,

We_____ Bidder, Proposer, or Company, hereby acknowledge and agree that we, as the Prime Company for Village of Palmetto Bay, Village of Palmetto Bay_____, ITB# 2025-12-010, as specified, have the sole responsibility for compliance with all the requirements of the Federal Occupational Safety and Health Act of 1970 and as may be amended, and all State and local safety and health regulations, and agree to indemnify and hold harmless the Village of Palmetto Bay, against any and all liability, claims, damages losses and expenses they may incur due to the failure of : _____
(Sub-Contractor's Names) to comply with such act or regulation.

Signature of Official: _____

Name (typed): _____

Title: _____

Company Name: _____

Date: _____

ACKNOWLEDGMENT

State of Florida

County of _____

On this _____day of, 20___, before me, the undersigned Notary Public of the State of Florida personally appeared_____ and whose name(s) is/are subscribed to the within instrument, and he/she/they acknowledge that he/she/they executed it.

WITNESS my hand and official seal

_____
NOTARY PUBLIC, STATE OF FLORIDA

VILLAGE OF PALMETTO BAY
ANTI-KICKBACK AFFIDAVIT

STATE OF FLORIDA }
} SS:
COUNTY OF MIAMI-DADE }

I, the undersigned, hereby duly sworn, depose and say that no portion of the sum herein bid will be paid to any employees of the Village of Palmetto Bay, its elected officials, and _____ or its employees, as a commission, kickback, reward or gift, directly or indirectly by me or any member of my Company or by an officer of the corporation.

Signature of Official: _____

Name (typed): _____

Title: _____

Company Name: _____

Date: _____

ACKNOWLEDGMENT

State of Florida

County of _____

On this _____day of, 20___, before me, the undersigned Notary Public of the State of Florida personally appeared_____ and whose name(s) is/are subscribed to the within instrument, and he/she/they acknowledge that he/she/they executed it.

WITNESS my hand and official seal

_____
NOTARY PUBLIC, STATE OF FLORIDA

STATEMENT OF PAST CONTRACT DISQUALIFICATIONS

The Bidder, Proposer, or Company shall state whether it or any of its officers or employees who have a proprietary interest in it, has ever been disqualified, removed, or otherwise prevented from bidding on, or completing a federal, state, or local government project because of the violation of law, a safety regulation, or for any other reason, including but not limited to financial difficulties, project delays, or disputes regarding work or product quality, and if so to explain the circumstances.

Do you have any disqualification as described in the above paragraph to declare?

Yes or No, If yes, explain the circumstances.

_____

_____

_____

_____

_____

_____

Executed on _____ at _____
under penalty of perjury of the laws of the State of Florida, that the foregoing is true and correct.

Signature of Official: _____

Name (typed): _____

Title: _____

Company Name: _____

Date: _____

E-VERIFY AFFIDAVIT

STATE OF _____

COUNTY OF _____

I,_____(the individual attesting below), being duly authorized byand on behalf of_____(hereinafter "Employer") after firstbeing duly sworn hereby swears or affirms as follows:

1. Employer understands that E-Verify is the federal E-Verify program operated by the United States Department of Homeland Security and other federal agencies, or any successor or equivalent programused to verify the work authorization of newly hired employees pursuant to federal law in accordancewith NCGS §64-25(5), and as the same may be amended.
2. Employer understands that Employers Must Use E-Verify. Each employer, after hiring an employee towork in the United States, shall verify the work authorization of the employee through E-Verify in accordance with NCGS §64-26(a), and as the same may be amended.
3. Employer's subcontractors will comply with E-Verify, and Employer will ensure compliance with E-Verifyby any and all subcontractors subsequently hired by Employer.

This_____day of_____, 20___.

_____
Signature of Affiant

Print or Type Name: _____

State of _____

County of _____

Signed and sworn to (or affirmed) before me, this

the_____day of_____, 20_____.

My Commission Expires: _____

_____
Notary Public

NHCS – E-Verify 081815

Foreign Country of Concern Attestation

Capitalized terms used herein have the definitions ascribed in section 287.138, F.S.

Name of Company is not owned by the government of a Foreign Country of Concern, is not organized under the laws of nor has its principal place of business in a Foreign Country of Concern, and the government of a Foreign Country of Concern does not have a Controlling Interest (twenty five percent (25%) or more) in the Company.

Under penalties of perjury, I declare that I have read the forgoing statement and that the facts stated in it are true.

Printed Name: _____

Title: _____

Signature: _____ Date: _____

Affidavit Attesting to Noncoercive Conduct for Labor or Services

Nongovernment Entity name: _____("**Company**")

Vendor FEIN: _____

Address: _____

City: _____ State: _____Zip: _____

Phone number: _____ Email Address: _____

As a nongovernmental entity executing, renewing, or extending a contract with a government entity, **Company** is required to provide an affidavit under penalty of perjury attesting that **Company** does not use coercion for labor or services in accordance with Section 787.06, Florida Statutes.

As defined in Section 787.06(2)(a), coercion means:

1. Using or threating to use physical force against any person;
2. Restraining, isolating, or confining or threating to restrain, isolate, or confine any person without lawful authority and against her or his will;
3. Using lending or other credit methods to establish a debt by any person when labor or services are pledged as a security for the debt, if the value of the labor or services as reasonably assessed is not applied toward the liquidation of the debt, the length and nature of the labor or service are not respectively limited and defined;
4. Destroying, concealing, removing, confiscating, withholding, or possessing any actual or purported passport, visa, or other immigration document, or any other actual or purported government identification document, of any person;
5. Causing or threating to cause financial harm to any person;
6. Enticing or luring any person by fraud or deceit; or
7. Providing a controlled substance as outlined in Schedule I or Schedule II of Section 893.03 to any person for the purpose of exploitation of that person.

As a person authorized to sign on behalf of the **Company**, I certify that the **Company** does not use coercion for labor or services in accordance with Section 787.06.

Written Declaration

Under penalties of perjury, I declare that I have read the foregoing Affidavit and that the facts stated in it are true.

Printed Name: _____

Title: _____

Signature: _____

Date: _____

Form **W-9**
(Rev. August 2013)
Department of the Treasury
Internal Revenue Service

Request for Taxpayer Identification Number and Certification

Give Form to the requester. Do not send to the IRS.

Print or type See **Specific Instructions** on page 2.

Name (as shown on your income tax return)

Business name/disregarded entity name, if different from above

Check appropriate box for federal tax classification:
☐ Individual/sole proprietor ☐ C Corporation ☐ S Corporation ☐ Partnership ☐ Trust/estate

☐ Limited liability company. Enter the tax classification (C=C corporation, S=S corporation, P=partnership) ▶ _____

☐ Other (see instructions) ▶

Exemptions (see instructions):
Exempt payee code (if any) _____
Exemption from FATCA reporting code (if any) _____

Address (number, street, and apt. or suite no.)

Requester's name and address (optional)

City, state, and ZIP code

List account number(s) here (optional)

Part I Taxpayer Identification Number (TIN)

Enter your TIN in the appropriate box. The TIN provided must match the name given on the "Name" line to avoid backup withholding. For individuals, this is your social security number (SSN). However, for a resident alien, sole proprietor, or disregarded entity, see the Part I instructions on page 3. For other entities, it is your employer identification number (EIN). If you do not have a number, see *How to get a TIN* on page 3.

Note. If the account is in more than one name, see the chart on page 4 for guidelines on whose number to enter.

Social security number
[ ][ ][ ] – [ ][ ] – [ ][ ][ ][ ]

Employer identification number
[ ][ ] – [ ][ ][ ][ ][ ][ ][ ]

Part II Certification

Under penalties of perjury, I certify that:

1. The number shown on this form is my correct taxpayer identification number (or I am waiting for a number to be issued to me), and
2. I am not subject to backup withholding because: (a) I am exempt from backup withholding, or (b) I have not been notified by the Internal Revenue Service (IRS) that I am subject to backup withholding as a result of a failure to report all interest or dividends, or (c) the IRS has notified me that I am no longer subject to backup withholding, and
3. I am a U.S. citizen or other U.S. person (defined below), and
4. The FATCA code(s) entered on this form (if any) indicating that I am exempt from FATCA reporting is correct.

Certification instructions. You must cross out item 2 above if you have been notified by the IRS that you are currently subject to backup withholding because you have failed to report all interest and dividends on your tax return. For real estate transactions, item 2 does not apply. For mortgage interest paid, acquisition or abandonment of secured property, cancellation of debt, contributions to an individual retirement arrangement (IRA), and generally, payments other than interest and dividends, you are not required to sign the certification, but you must provide your correct TIN. See the instructions on page 3.

Sign Here **Signature of U.S. person** ▶ **Date** ▶

General Instructions

Section references are to the Internal Revenue Code unless otherwise noted.

Future developments. The IRS has created a page on IRS.gov for information about Form W-9, at *www.irs.gov/w9*. Information about any future developments affecting Form W-9 (such as legislation enacted after we release it) will be posted on that page.

Purpose of Form

A person who is required to file an information return with the IRS must obtain your correct taxpayer identification number (TIN) to report, for example, income paid to you, payments made to you in settlement of payment card and third party network transactions, real estate transactions, mortgage interest you paid, acquisition or abandonment of secured property, cancellation of debt, or contributions you made to an IRA.

Use Form W-9 only if you are a U.S. person (including a resident alien), to provide your correct TIN to the person requesting it (the requester) and, when applicable, to:

1. Certify that the TIN you are giving is correct (or you are waiting for a number to be issued),
2. Certify that you are not subject to backup withholding, or
3. Claim exemption from backup withholding if you are a U.S. exempt payee. If applicable, you are also certifying that as a U.S. person, your allocable share of any partnership income from a U.S. trade or business is not subject to the withholding tax on foreign partners' share of effectively connected income, and
4. Certify that FATCA code(s) entered on this form (if any) indicating that you are exempt from the FATCA reporting, is correct.

Note. If you are a U.S. person and a requester gives you a form other than Form W-9 to request your TIN, you must use the requester's form if it is substantially similar to this Form W-9.

Definition of a U.S. person. For federal tax purposes, you are considered a U.S. person if you are:

- An individual who is a U.S. citizen or U.S. resident alien,
- A partnership, corporation, company, or association created or organized in the United States or under the laws of the United States,
- An estate (other than a foreign estate), or
- A domestic trust (as defined in Regulations section 301.7701-7).

Special rules for partnerships. Partnerships that conduct a trade or business in the United States are generally required to pay a withholding tax under section 1446 on any foreign partners' share of effectively connected taxable income from such business. Further, in certain cases where a Form W-9 has not been received, the rules under section 1446 require a partnership to presume that a partner is a foreign person, and pay the section 1446 withholding tax. Therefore, if you are a U.S. person that is a partner in a partnership conducting a trade or business in the United States, provide Form W-9 to the partnership to establish your U.S. status and avoid section 1446 withholding on your share of partnership income.

SECTION 9.0: Other Forms

VILLAGE OF PALMETTO BAY
NOTICE OF INTENT TO AWARD

TO: _____
Company

_____
Address

ATT: _____
Name and Title

PROJECT DESCRIPTION: **PBP and CRP – Replacement of Designated Areas of Asphalt Walking Trails** ITB No. 2025-12-010 in accordance with Contract Documents as prepared by the Village _____:

This is to advise that the Village of Palmetto Bay intends to award the Contract for the above referenced Project as a result of your Bid of: _____ Dollars ($_____) submitted to the Village of Palmetto Bay (Owner) on _____ (Date).

Two (2) sets of the Contract Documents for this Project are attached. Each set contains an unexecuted Contact. Please execute all copies of the Contract and attach your insurance certificate (COI) as Palmetto Bay being the holder and return to our office within ten (10) consecutive days for final execution by the Owner.

Sincerely yours,

Alessia Bencomo
Procurement Specialist

Cc:

Attachment(s)

VILLAGE OF PALMETTO BAY
NOTICE TO PROCEED

TO: _____
Company

_____
Address

ATT: _____
Name and Title

PROJECT DESCRIPTION: **PBP and CRP – Replacement of Designated Areas of Asphalt Walking Trails**
ITB No. 2025-12-010 in accordance with Contract Documents
as prepared by the Village

_____:

One executed copy of your Contract for the above Project has been forwarded to you through the Finance Department. The Commencement date is _____, 20___. Completion date shall be _____, 20__.

Your attention is invited to the provision whereby you shall start to perform your obligations under the Contract Documents on the Commencement date. Said date shall begin the Contract Time.

The Village of Palmetto Bay Manager's Office Director and/or his/her designee will be responsible for this project.

Sincerely yours,

Alessia Bencomo
Procurement Specialist

BID BOND

KNOW ALL MEN BY THESE PRESENTS, that we, _____(hereinafter called the Principal), and _____(hereinafter called the Surety), a Corporation chartered and existing under the laws of the State of _____ is authorized to do business in the State of Florida, and having an Agent resident therein, such Agent and Company acceptable to the Village of Palmetto Bay, are held and firmly bound unto the Village of Palmetto Bay (hereinafter called Village), in the sum of _____Dollars ($_____), good and lawful money of the United States of America, to be paid upon demand of the said Village, to which payment well and truly to be made we bind ourselves, our heirs, executors, administrators,
successors and assigns, jointly and severally and firmly by these presents.

WHEREAS; the above bounded Principal contemplates submitting or has submitted a Bid to the Village for furnishing all necessary labor, materials, equipment, machinery, tools, apparatus, services, all insurances and taxes, including but not limited to, state workmen's compensation and unemployment compensation insurance and taxes incurred in the performance of the Contract, and means of transportation for construction of:

VILLAGE OF PALMETTO BAY (the "Village")
PBP and CRP – Replacement of Designated Areas of Asphalt Walking Trails

for said Village, and;
WHEREAS; the Principal desires to file this Bond in accordance with law, in lieu of a certified Bidder's check otherwise required to accompany this Bid in the amount of five percent (5%) of the Base Bid.

NOW THEREFORE, the conditions of this obligation are such that, if the Bid be accepted, the Principal shall within ten (10) days after receipt of notification of the acceptance thereof, execute the Contract in accordance with the Invitation to Bid and Contact Documents and upon the terms, conditions and price set forth therein, in the form and manner required by the Village and execute sufficient and satisfactory Performance and Payment Bonds payable to the Village of Palmetto Bay, each in an amount of one hundred percent (100%) of the total Contract Price, as indicated in the Bid, in form and with security as set forth in the Invitation to Bid and Contract Documents satisfactory to the Village, then this obligation to be void, otherwise to be and remain in full force and virtue in law; and the Surety shall upon failure of the Principal to comply with any or all of the foregoing requirements within the time specified above immediately pay to the aforesaid Village upon demand the amount hereof in good and lawful money of the United States of America, not as a penalty but as liquidated damages.

IN WITNESS WHEREOF, THE said _____, as "Principal" herein has caused these presents to be signed in its name, by its _____ under its corporation seal, and the said _____ as "Surety" herein, has caused these presents to be signed in its name by its _____, under its corporate seal, this _____ day of _____, and attested by its _____, A.D., 20___.

ATTEST:

_____

_____ By:

_____(Title)

(Principal)

ATTEST:

_____

_____ By: _____

(Surety) Attorney-in-Fact

(Attorneys-in-Fact who sign this bond must file with it a certified copy of their power-of-Attorney to sign said Bond).

PERFORMANCE BOND

PROJECT TITLE: **PBP and CRP – Replacement of Designated Areas of Asphalt Walking Trails (the "Project")**
CONTRACTOR:
CONTRACT NO: 2025-12-010
CONTRACT DATED:

STATE OF §_____
§_____
COUNTY OF §_____

KNOW ALL MEN BY THESE PRESENTS: That by this Bond, we, _____ of the City of _____, County of _____, and State of _____, as Principal, and _____, authorized, licensed and admitted to do business under the laws of the State of Florida to act as Surety on bonds, as Surety, are held and firmly bound unto The Village of Palmetto Bay, as Obligee, in the penal sum of _____ Dollars ($_____) for the payment whereof, the said Principal and Surety bind themselves, and their heirs, administrators, executors, successors and assigns, jointly and severally, by these presents:

WHEREAS, the Principal has entered into a certain written Contract with _____ (Company), dated the _____ day of _____, 20____, for the construction of the **PBP and CRP – Replacement of Designated Areas of Asphalt Walking Trails** (the "Project"), which Contract is by reference made a part of this Bond.

NOW, THEREFORE, THE CONDITION OF THIS OBLIGATION, IS SUCH THAT, if the said Principal shall faithfully perform said Contract and shall in all respects fully and faithfully observe and perform all and singular the covenants, conditions, warranties and agreements in and by said Contract agreed and covenanted by the Principal to be observed and performed, and according to the true intent and meaning of said Contract, then this obligation shall be void; otherwise it shall remain in full force and effect.

Whenever Principal shall be declared by Obligee to be in default under the Contract, Obligee having performed Obligee's obligations thereunder, the Surety shall promptly remedy the default, or shall promptly:

(1) Complete the Contract in accordance with its terms and conditions; or

(2) Obtain a bid or bids for completion of the Contract in accordance with its terms and conditions and upon determination by Surety of the lowest responsive, responsible bidder, or, if Obligee elects, upon determination by Obligee and the Surety jointly of the lowest responsive, responsible bidder, arrange for a contract between such bidder and Surety for completion of the Contract in accordance with its terms and

conditions, and make available as work progresses (even though there should be a default or a succession of defaults under the contract or contracts of completion arranged under this paragraph) sufficient funds to pay the cost of completion less the balance of the Contract price; but not exceeding the amounts set forth in the first paragraph hereof.

The term "balance of the Contract price" as used in this Bond, shall mean the total amount payable by Obligee to Principal under the Contract and amendments thereto, less the amount paid by Obligee to Principal and less amounts withheld by Obligee pursuant to its rights under the Contract.

Surety, for value received, stipulates and agrees that no change, extension of time, alteration or addition to the terms of the Contract, or to the work performed thereunder, or the plans, specifications, or drawings accompanying the same, shall in any way affect its obligation on this Bond, and it does hereby waive notice of any such change, extension of time, alteration or addition to the terms of the Contract, or to the work to be performed thereunder and further agrees to all of the terms contained in the Contract.

No right of action shall accrue on this Bond to or for the use of any person or corporation other than the Obligee named herein or the heirs, successors, executors or administrators of the Obligee.

IN WITNESS WHEREOF, the said Principal and Surety have signed and sealed this instrument this ____ day of _____, 20___.

Witness:_____	Witness:_____
Principal	Surety
By:_____	By:_____
Name:_____ (Print)	Name:_____ (Print)
Title:_____	Title:_____
Address:_____	Address:_____
_____	_____

The name and address of the Resident Agent for service of process on Surety is:

Name:_____

Address:_____

Phone:_____

LABOR AND MATERIAL PAYMENT BOND

PROJECT TITLE: PBP and CRP – Replacement of Designated Areas of Asphalt Walking Trails
CONTRACTOR:
CONTRACT NO: 2025-12-010
CONTRACT DATED:

STATE OF §_____
§_____
COUNTY OF §_____

KNOW ALL MEN BY THESE PRESENTS: That, by this Bond, we _____, of the City of _____, County of _____, State of _____, as Principal, and _____, a Company, authorized, licensed and admitted to do business under the laws of the State of Florida, as Surety, are held and firmly bound to the Village of Palmetto Bay, as Obligee, in the sum of $_____ for the payment of which Principal and Surety bind ourselves our heirs, personal representatives, successors, and assigns, jointly and severally.

THE CONDITION OF THE BOND is that if Principal:

1. Promptly makes payments to all lienors or other claimants supplying labor, material, or supplies used directly or indirectly by Principal in the prosecution of the work provided in the Contract between Principal and Obligee (the "Contract") for construction of the **PBP and CRP – Replacement of Designated Areas of Asphalt Walking Trails** the Contract being made a part of this Bond by reference; and

2. Pays Obligee all loss, damage, expenses, costs, and attorneys' fees, including appellate proceedings that Obligee sustains because of default by Principal under this Bond; then this Bond is void; otherwise, it remains in full force.

Any changes, extensions of time, alterations or additions in or under the Contract, Contract Documents, plans, specifications and/or drawings, or the work to be performed thereunder, and compliance or noncompliance with formalities connected with the Contract or with the changes do not affect Surety's obligations under this Bond, and Surety does hereby waive notice of any such changes, extensions of time, alterations or additions in or under the Contract, Contract Documents, plans, specifications and/or drawings, or the work to be performed thereunder.

This Bond is filed in accordance with Section 713.23, Florida Statutes, and/or Section 255.05, Florida Statutes, whichever or both as may be applicable.

DATED on _____, 20_____.

IN WITNESS WHEREOF, the said Principal and Surety have signed and sealed this instrument this ____ day of __, 20___.

Witness:_____	Witness:_____
Principal	Surety
By:_____	By:_____
Name:_____ (Print)	Name:_____ (Print)
Title:_____	Title:_____
Date:_____	Date:_____
Address:_____	Address:_____

The name and address of the Resident Agent for service of process Surety is:

Name:_____

Address:_____

Phone:_____

CONTRACTOR'S Affidavit and Partial Release

Owner: Village of Palmetto Bay
Project: **PBP and CRP – Replacement of Designated Areas of Asphalt Walking Trails**

Request for Proposal#: 2025-12-010

Date: _____

STATE OF FLORIDA,
COUNTY OF DADE:

On this _____ day of _____, 20___, the undersigned affiant personally appeared before me and, after first being duly sworn, deposes and says:

1. The undersigned is the duly authorized representative of _____ doing business in the Village of Palmetto Bay, hereafter called Contractor.

2. The Contractor for and in consideration of payment to the Contractor in the amount of $_____, and all other previous payments paid by Owner to Contractor, does hereby for and on behalf of _____ Contractor, waive, release, remise and relinquish the Contractor's right to claim, demand or impose a lien or liens for work done or materials and/or services furnished or any other class of lien whatsoever, on any of the premises or property owned by Owner through the above date.

3. The Contractor, by authorization and for the Contractor, further releases and forever discharges Owner, Engineer and the Project from any and all obligations arising out of the Contractor's Contract with the Owner, including all change orders thereto, either oral or written and any and all claims demands, and liens of any kind, nature and character whatsoever.

4. All persons, entities, Potential Lienors (subcontractor, sub-subcontractors suppliers, laborers and materialmen) and claimants who furnished material, labor and/or services for the Project have been paid for work completed through the above date.

5. This Affidavit and Partial Release is made by the Contractor with full knowledge of the applicable laws of the State of Florida. In addition to such rights as may be afforded to Owner under said applicable laws, the undersigned expressly agrees to indemnify and save Owner, Engineer, and the Project harmless from any and all actual costs and expenses, including reasonable attorney's fees, arising out of any claim by laborers, subcontractors, sub-subcontractors, materialmen, Potential Lienors or other claimants who might claim that they have not been paid for services or material furnished by or through the Contractor in connection with the Work performed under the Contract through the above date.

6. The Contractor further warrants that waivers of lien have been obtained from all Contractors, subcontractors, sub-subcontractors, suppliers, laborers and materialmen with respect to all work performed on the Project through the above date in such form as to constitute an effective waiver of lien under the applicable laws of the State of Florida.

_____(Seal)
Contractor

_____
Print Name

By:_____
_____
Print Name

State of Florida,
County of Dade:

The foregoing instrument was acknowledged before me this ____ day of _____, 20___, by _____. He/she took an oath, and is personally known to me or has produced _____ as identification.

_____
Notary Public, State of Florida

My Commission Expires:

_____
Print Name of Notary Public

CONTRACTOR'S Affidavit and Final Release

Owner: Village of Palmetto Bay
Project: **PBP and CRP – Replacement of Designated Areas of Asphalt Walking Trails**

Request for Proposal#: 2025-12-010

Date: _____

STATE OF FLORIDA,
COUNTY OF DADE:

On this _____ day of _____, 20___, the undersigned affiant personally appeared before me and, after first being duly sworn, deposes and says:

1. The undersigned is the duly authorized representative of _____ doing business in the Village of Palmetto Bay, hereafter called Contractor.

2. The Contractor for and in consideration of final payment to the Contractor in the amount of $_____, and all other previous payments paid by Owner to Contractor, does hereby for and on behalf of _____ Contractor, waive, release, remise and relinquish the Contractor's right to claim, demand or impose a lien or liens for Work done or materials and/or services furnished or any other class of lien whatsoever, on any of the premises or property owned by Owner.

3. The Contractor, by authorization and for the Contractor, further releases and forever discharges Owner, Engineer and the Project from any and all obligations arising out of the Contractor's Contract with the Owner for Work at the Project, including all change orders thereto, either oral or written, and any and all claims, demands, and liens of any kind, nature and character whatsoever.

4. All work performed under the Contract with Owner on the Project has been fully completed and that all persons, entities, Potential Lienors (subcontractors, sub-subcontractors, suppliers, laborers and materialmen) and other claimants who furnished material, labor and/or services for the Project have been paid in full.

5. This Affidavit and Final Release is made by the Contractor with full knowledge of the applicable laws of the State of Florida. In addition to such rights as may be afforded to Owner under said applicable laws, the Contractor expressly agrees to indemnify and save Owner, Engineer, and the Project harmless from any and all actual costs and expenses, including reasonable attorney's fees, arising out of any claim by laborers, subcontractors, sub-subcontractors, materialmen, Potential Lienors or other claimants who might claim that they have not been paid for services or material furnished by or through the Contractor in connection with the Work performed under the Contract at the Project.

6. The Contractor warrants that in connection with the Work performed on the Project, there are no outstanding contractors' liens affecting the Project, that all amounts due and payable with respect to the Work performed by the Contractor (including Social Security, Unemployment, Insurance, Sales, Use and any other taxes), Union dues, and fringe benefits to employees, if any, have been duly paid to date and/or are included in the application for final payment. The Contractor further warrants that waivers of lien have been obtained from all Contractors, subcontractors, sub-subcontractors, suppliers, laborers and materialmen with respect to all Work performed on the Project in such form as to constitute an effective waiver of lien under the applicable laws of the State of Florida.

_____(Seal)
Contractor

_____
Print Name

By:_____

_____
Print Name

State of Florida,
County of Dade:

The foregoing instrument was acknowledged before me this ____ day of _____, 20___, by _____. He/she took an oath, and is personally known to me or has produced _____ as identification.

_____
Notary Public, State of Florida

My Commission Expires:

_____
Print Name of Notary Public

WAIVER AND RELEASE OF LIEN UPON PROGRESS PAYMENT

Owner: Village of Palmetto Bay
Project: **PBP and CRP – Replacement of Designated Areas of Asphalt Walking Trails**

Request for Proposal#: 2025-12-010

Date: _____

WHEREAS, the Undersigned _____ in consideration of payment in the amount of $_____ which is hereby acknowledged, does waive, release and relinquish its right to claim a lien or liens for work performed and/or materials furnished to the Owner on the Project through the above date. In addition, Undersigned does waive, release and relinquish its right to claim against the Payment Bond of Contractor. This Waiver and Release of Lien Upon Progress Payment is given pursuant to Section 713.20(3) of the Construction Lien law.

The Undersigned expressly agrees to indemnify and save Owner and the Project harmless from any and all costs and expenses, including reasonable attorney's fees, arising out of any claims by any claimant who might claim that they have not been paid for services or material furnished by or through the Undersigned for the Project through the above date.

Company: _____(Seal)

Print: _____

By: _____

Print: _____

State of Florida,
County of Dade:

The foregoing instrument was acknowledged before me this ____ day of _____, 20___, by _____. He/she took an oath, and is personally known to me or has produced _____ as identification.

_____
Notary Public, State of Florida

My Commission Expires:

_____
Print Name of Notary Public

WAIVER AND FINAL RELEASE OF LIEN

Owner: Village of Palmetto Bay
Project: **PBP and CRP – Replacement of Designated Areas of Asphalt Walking Trails**

Request for Proposal#: **2025-12-010**

Date: _____

The Undersigned _____, for and in consideration of the final payment in the sum of $_____, hereby acknowledges receipt of final payment and all previous payments paid to Undersigned. In consideration of the payments received as set forth above, the undersigned hereby:

1. Represents that all work to be performed by Undersigned for the Project has been fully completed and that all persons, entities, lienors and claimants who furnished material, labor and/or services incident to the completion of said work and through the Undersigned have been paid in full.

2. Does waive, release, remise and relinquish its right to claim, demand, or impose a lien or liens or make any claim against the Payment Bond of the Contractor, for work done or materials and/or services furnished on any of the premises or property owned by the Owner.

3. Warrants that the work performed by the Undersigned on the Project (including the work performed by any person or company working through the Undersigned) is and shall be lien free, and that any person or company hired by the Undersigned does not have, nor shall have, any right to place any contractors' lien or other lien, bond, claim or other encumbrance on the Project or the property of the Owner.

4. States that this Final Release of Lien is made by the Undersigned with full knowledge of the applicable laws of the State of Florida. In addition to such rights as may be afforded to Owner under said applicable laws, the Undersigned expressly agrees to indemnify and hold the Owner harmless from any and all costs and expenses, including reasonable attorney's fees, arising out of claims by any laborers, subcontractors, sub-subcontractors, materialmen, lienors or other claimants who might claim that they have not been paid for services or material furnished by or through Undersigned in connection with the work performed on the Project.

Company:_____(Seal)

_____
Print Name

By:_____

_____
Print Name

State of Florida,
County of Dade:

The foregoing instrument was acknowledged before me this ____ day of _____, 20___, by _____. He/she took an oath, and is personally known to me or has produced _____ as identification.

_____
Notary Public, State of Florida

My Commission Expires:

_____
Print Name of Notary Public

SECTION 10.0: Exhibits

Draft Contract for: PBP and CRP – Replacement of Designated Areas of Asphalt Walking Trails

Between the Village of Palmetto Bay, Florida and _____.

THIS Contract is made and entered into as of the _____ day of _____ 2025, by and between the Village of Palmetto Bay, a Florida Municipal Corporation (the "Village"), and _____., (the "Company") and jointly referred to as the "Parties".

WHEREAS the Village advertised an Invitation to Bid ("ITB") on **April 29th, 2025** for the **PBP and CRP – Replacement of Designated Areas of Asphalt Walking Trails**; and

WHEREAS, the Company submitted a bid dated **May 16th, 2025**, in response to **ITB# 2025-12-010;** and

WHEREAS, the Village Council, at a meeting held on _____, awarded the bid to the Company to for the replacement of the designated areas of asphalt walkways/trails within Palmetto Bay Park located at 17535 SW 95th Avenue, Palmetto Bay, Florida 33157, and Coral Reef Park located at 7895 SW 152nd Street, Palmetto Bay, Florida 33157on behalf of the Village and approved the Bid Sheet submitted by the Company in response to the ITB (the "Work").

NOW THEREFORE, in consideration of the promises and the mutual covenants below, the Parties agree as follows:

TABLE OF CONTENTS

1. Exhibits
2. Scope of Work
3. Qualifications
4. Term
5. Contract Price
6. Disputed Invoices
7. Limitation of Liability
8. Construction Supervision/Reports
9. Notices
10. Termination
11. Indemnification
12. Insurance

DRAFT

13. Modification Amendment
14. Governing Law
15. Waiver
16. Assignment
17. Prohibition Against Contingent Fees
18. Conflict of Interest
19. Entire Agreement
20. Caption and Paragraph Heading
21. Joint Preparation
22. Counterparts
23. Preservation of Village Property
24. Public and Employee Safety
25. Immigration Act of 1986
26. Company Non-Discrimination
27. Federal and State Tax
28. Public Records
29. Severability
30. E-Verify
31. Warranty
32. Subcontractor

DRAFT

Article I. Exhibits

The Exhibits below are also collectively referred to as the "Documents". In the event of any conflict between the Documents or any ambiguity or missing specification or instruction, the following priority is established:

A. This Contract
B. ITB# _____ issued by the Village
C. Bid Sheet submitted by _____
D. Plans Designed by _____
E. Resolution No. _____

Article 2. Scope of Work

1. The Work is generally described as follows: _____

The specifications for this Project are to the best of the knowledge of the Village to be accurate and to contain no affirmative misrepresentation or any concealment of fact. The Company is cautioned to undertake an independent analysis of any test results in the specifications, as the Village does not guarantee the accuracy of any test results contained in the specifications package. In preparing its proposal, the Company and all subcontractors named in its proposal shall bear sole responsibility for proposal preparation errors resulting from any misstatements or omissions in the specifications that could easily have been ascertained by examining either the project site or test data in the Village's possession. Any patent ambiguity or defect shall give rise to a duty of the Company to inquire prior to proposal submittal. Failure to inquire shall cause any such ambiguity or defect to be construed against the Company. An ambiguity or defect shall be considered patent if it is of such a nature that the Company, assuming reasonable skill, ability, and diligence on its part, knew or should have known of the existence of the ambiguity or defect.

The failure of the Company to notify the Village in writing of specification defects or ambiguities prior to proposal submittal shall waive any right to assert defects or ambiguities subsequent to the submittal of the proposal. In the event that, after awarding the Contract, any dispute arises as a result of any actual or alleged ambiguity or defect in the specifications, or any other matter whatsoever, the Company shall immediately notify the Village in writing, and the Company shall continue to perform, irrespective of whether or not the ambiguity or defect is major, material, minor or trivial, and irrespective of whether a change order, time extension, or additional compensation has been granted by Village. The Company shall procure all permits and licenses, pay all charges and fees, and file all notices as they pertain to the completion of the Project as applicable.

3. The Company shall promptly correct Work rejected by the Village as failing to conform to the requirements of the Contract Documents. The Company shall bear the cost of correcting rejected work, including the cost of uncovering, replacing and additional testing.

Article 3. Qualifications

The individual executing the Contract on behalf of the Company warrants to the Village that the Company is a corporation duly constituted and authorized to do business in the State of Florida, is in good standing and that Company possesses all required licenses and certificates of competency required by the State of Florida, Miami -Dade County, and the Village to perform the Work. The Company acknowledges that due to the nature of this Contract that the Company must take all necessary precautions to

DRAFT

avoid accidents and shall comply with all local, state, and federal regulations that apply. The Company shall be solely responsible for the payment of any fines or penalties incurred as a result of its actions.

The Project Manager for the Company is_____.

Article 4. Term/Construction Schedule

The term of this Contract shall commence upon the issuance by the Village of a "Notice to Proceed", shall remain in effect until the Work has been completed and the Village has satisfactorily accepted the Work performed.

Article 5. Contract Price

The guaranteed maximum price (GMP) shall include all Work necessary for the proper execution and completion of the Project**.** Based on the Contractor's proposal the total amount is _____ ($_____). The Company shall give a detailed description of any work that requires additional compensation if the Project exceeds the total price. Any additional compensation must be approved by the Village and which can be denied in its sole discretion. The Company shall fund any additional costs that exceed the total price if the Company either failed to provide a detailed need for the additional amount or if the Village denies additional compensation.

The payment shall be as follows: Company shall submit invoices to: Village of Palmetto Bay, Parks and Recreation Department, 9705 E. Hibiscus Street, Palmetto Bay, Florida 33157. Only work that has been signed off as satisfactorily completed can be subject to payment.

Article 6. Disputed Invoices

In the event that all or a portion of an invoice submitted to the Village for payment to the Company is disputed, or additional backup documentation is required, the Village shall notify the Company within fifteen (15) working days of receipt of the invoice of the objection, modification or additional documentation request. The Company shall provide the Village with additional backup documentation within five (5) working days of the date of the Village's notice. The Village may request additional information, including but not limited to, all invoices, time records, expense records, accounting records, and payment records of the Company. The Village, at its sole discretion, may pay to the Company the undisputed portion of the invoice. The Parties shall endeavor to resolve the dispute in a mutually agreeable fashion.

DRAFT

Article 7. Limitation of Liability

The Village desires to enter into this Contract only if in so doing the Village can place a limit on its liability for any cause of action for breach of this Contract, so that its liability for any such breach never exceeds the sum of $_____. The Company hereby expresses its willingness to enter into this Contract with a $_____ limitation on recovery for any action for breach of contract. According, and in consideration of the separate consideration of $_____, the receipt of which is hereby acknowledged, the Village shall not be liable to the Company for damages to the Company in an amount in excess of $_____, for any action for breach of contract arising out of the performance non-performance of any obligations imposed upon the Village by this Contract. Nothing contained in this paragraph or elsewhere in this Contract is in any way intended to be a waiver of limitation placed upon the Village's liability as set forth in Florida Statutes Section 768.28.

Article 8. Construction Supervision/Reports

A. The Village Manager is designated as the Contract Administrator for the Village. Reports and information the Village reasonably requires regarding the administration of this Contract should be addressed to the Village Manager with copies to Fanny Carmona, the Director of Parks and Recreation. The Villages' assigned Project Manager is Fanny Carmona, the Director of Parks and Recreation.

B. The Project Manager shall supervise and direct the Work using his best skill and attention. The Project Manager shall be solely responsible for and have control over the construction means, methods, techniques, sequences, and procedures, and for coordinating all aspects of the Work.

Article 9. Notices

Any notices required or permitted by this Contract shall be in writing and shall be deemed to have been properly given if transmitted by hand- delivery or by Federal Express addressed to the Parties at the following address:

Village:	Company:
Nick Marano	Owner/Principal
Village Manager	Title
Village of Palmetto Bay	Company Name
9705 E. Hibiscus Street	Address1
Palmetto Bay, FL 33157	Address2

Article 10. Termination

A. Termination Without Cause

The Village may terminate this Contract without cause upon thirty (30) days prior written notice. Termination or cancellation of the Contract will not relieve the Company of any deliverables and Work product due prior to the termination of the

DRAFT

Contract, including but not limited to reports, statements of accounts, payments due the Village and any other records requested by the Village prior to the termination of the Contract, or after termination in the Village's discretion if needed for a post contract audit. Termination of the Contract will not relieve the Company of any obligations or liabilities resulting from any acts committed by the Company prior to the termination of the Contract.

B. Termination with Cause

Without waiving the right to terminate without cause, the Village may issue a written notice claiming breach of Contract and giving the Company ten (10) calendar days to cure the default. If the alleged breach of Contract is not cured, then the Village may terminate the Contract and be excused from further performance following termination. However, termination of the Contract will not relieve the Company of any deliverables and Work product due prior to the termination of the Contract, including but not be limited to reports, statements of accounts, payments due the Village and any other records requested by the Village prior to the termination of the Contract. The Village shall not be liable for any damages for lost profits, special damages, consequential damages, or business interruption on account of the Village's decision to terminate this Contract. Additionally, the Company agrees that in the event this Contract is terminated for the Village's breach, the damages that the Company may have against the Village shall be limited to actual compensatory damage, and in no event more than the amount in paragraph 7, above.

C. Liquidated Damages

The Parties recognize that time is of the essence of this Contract and that the Village will suffer financial loss and other damages if the Work is not substantially or finally complete within the time specified in Article 4 above. They also recognize the expense and difficulties involved in a legal or arbitration proceeding. The Company acknowledges and agrees that the actual damages which the Village will suffer in the event of delay in achieving Substantial Completion or Final Completion of the Work are difficult, if not impossible, to determine and that the liquidated damages described are a fair and reasonable estimate of the delay damages which the Village is expected to suffer in the event of such delay. Accordingly, as actual damages cannot be ascertained, the Parties agree that as liquidated damages for delay, but not as a penalty, the Company shall pay the Village the amount of One Thousand and 00/100 Dollars ($1,000.00) for each day after the time specified in the Documents for Substantial Completion until the Work is substantially complete.

Liquidated damages shall be deducted from the Company's applications for payment. However, if at the time of the Company's final application for payment, the Company is owed insufficient amounts to fully cover the deduction for liquidated damages, then the Company shall pay the amount due within ten (l0) days of written demand by the Village.

DRAFT

Article 11. Indemnification

The Company shall indemnify, defend and hold harmless the Village and its officers, employees, agents and instrumentalities from any and all liability, losses or damages, including attorneys' fees and costs of defense at both trial and appellate levels, in which the Village or its officers, employees, agents or instrumentalities may incur as a result of claims, demands, suits, causes of actions or proceedings of any kind or nature arising out of, relating to or resulting from the performance of this Contract by the Company or its employees, agents, servants, partners, principals or subcontractors. The Company shall pay all claims and losses in connection therewith and shall investigate and defend all claims, suits or actions of any kind or nature in the name of the Village, and shall pay all costs, judgments, and attorney's fees which may issue as a result of the Company's negligence, at both trial and appellate levels. The Company expressly understands and agrees that any insurance protection required by this Contract or otherwise provided by the Company shall in no way limit the responsibility to indemnify, hold harmless and defend the Village or its officers, employees, agents, and instrumentalities. One Percent (1%) of the Contract amount shall represent the consideration to be provided for this Indemnification. Nothing contained herein shall be deemed a waiver of Sovereign Immunity provided to the Village under Section 768.28, Florida Statutes.

Article 12. Insurance/Bonds

The Award of this Contract is contingent upon the receipt of the insurance documents, as required, within ten (10) calendar days after signing this Contract. Certificates of Insurance must be submitted to the Procurement Division. Certificates of Insurance that provide insurance coverage must meet the requirements outlined below; **and name the Village as an additional insured.**

- Comprehensive General Liability - $1,000,000 combined single limit for each occurrence for bodily injury and property damage
- Workers Compensation - Statutory Limits
- Automobile Liability - $1,000,000 per occurrence for all claims arising out of bodily injuries or death and property damages.

All insurance policies must be issued by companies authorized to do business under the laws of the State of Florida. The companies must be rated no less than "B+" as to management and no less than "Class V" as to strength by the latest edition of Best's Insurance guide, published by A.M. Best Company, Olwick, New Jersey, and its equivalent.

Certificates of Insurance must indicate that for any cancellation of coverage before the expiration date, the issuing insurance carrier will mail thirty (30) day written advance notice to the Village.

DRAFT

In addition, the Company agrees not to modify the insurance coverage without thirty (30) days written advance notice to the Village.

Compliance with the foregoing requirements shall not relieve the Company of its liability and obligations under this section or under any other section in the Contract.

If the insurance certificate is received within the specified time frame but not in the manner prescribed, the Company shall be verbally notified of such deficiency and shall have an additional five (5) calendar days to submit a corrected certificate to the Village. If the Company fails to submit the required insurance documents in the manner prescribed within five (5) calendar days after Village notification to comply, the Company shall be in default of the contractual terms and conditions and award of the Contract will be rescinded, unless such time frame for submission has been extended by the Village.

A. If required, Performance and Payment Bonds must be received before Notice to Proceed is issued. Each bond shall guarantee One Hundred Percent (100%) of the project, and subject to Village approval.

Article 13. Modification Amendment

This writing and exhibits contain the entire Contract of the Parties. No representations were made or relied upon by either Party, other than those that are expressly set forth. No agent, employee, or other representative of either Party is empowered to modify and amend the terms of this Contract, unless executed in writing with the same formality as the execution of this Contract. No waiver of any provision of this Contract shall be valid or enforceable unless such waiver is in writing and signed by the Party granting such waiver.

Article 14. Governing Law

This Contract shall be construed in accordance with and governing by the laws of the State of Florida. The exclusive venue for any litigation shall be in the state courts of Miami-Dade County, Florida.

Article 15. Waiver

The failure of either Party to object to or to take affirmative action with respect to any conduct of the other which is in violation of the terms of this Contract shall not constitute a waiver of the violation or breach, or of any future violation, breach, or wrongful conduct. No waiver by the Village of any provision of this Contract shall be deemed to be a waiver of any other provision of any subsequent breach by the Company of the same, or any other provision of the Contract. The Village's consent to or approval of any act by the Company requiring the Village's consent or approval shall not be deemed to render unnecessary the obtaining of the Village's consent to

DRAFT

or approval of any subsequent consent or approval of Company, whether or not similar to the act so consented to or approved.

Article 16. Assignment

The Company shall not assign, transfer, convey, sublet, or otherwise dispose of this Contract.

Article 17. Prohibition Against Contingent Fees

The Company warrants that, other than a bona fide employee working solely for the Company, no person has been retained to solicit or secure this Contract, and that it has not paid or agreed to pay any person, corporation, individual or entity any fee, commission, percentage, gift, or any other consideration contingent upon or resulting from the award or making of this Contract.

Article 18. Conflict of Interest

The Company agrees to adhere to and be governed by the Village's Conflict of Interest Ordinance 2-121, et seq, which is incorporated by reference as if fully set forth.

Article 19. Entire Agreement

No statements, representations, or warranty, either written or oral, from whatever source arising, except as expressly stated in this Contract, shall have any legal validity between the Parties or be binding upon either. The Parties acknowledge that this Contract contains the entire understanding and agreement of the Parties.

Article 20. Captions and Paragraph Headings

Captions and paragraph headings contained in this Contract are for convenience and reference only and in no way define, describe, extend, or limit the scope and intent of this Contract, nor the intent of any of its provisions.

Article 21. Joint Preparation

The preparation of this Contract has been a joint effort of the Parties and shall not be construed more severely against either Party. It is the Parties' further intention that this Contract shall be construed liberally to achieve its intent.

Article 22. Counterparts

This Contract may be executed in one or more counterparts, each of which shall be deemed an original, but all of which shall constitute one and the same Contract.

DRAFT

Article 23. Preservation of Village Property

The Company shall provide and install suitable safeguards, approved by the Village, to protect Village property from injury or damage. If Village property is injured or damaged resulting from the Company's operations, it shall be replaced or restored at the Company's expense. The property shall be replaced or restored to a condition as good as when the Company began work. The Company shall keep the premises and surrounding area free from accumulation of debris and trash related to the Work. At the completion of the Work, the Company shall remove all construction equipment, machinery and surplus material and properly dispose of waste material.

Article 24. Public and Employee Safety

Whenever the Company's operations create a condition hazardous to the public or Village employees, it shall, at its expense and without cost to the Village, furnish, erect, and maintain such fences, temporary railings, barricades, lights, signs and other devices and take such other protective measures as are necessary to prevent accidents or damage or injury to the public, Village employees or Village property.

Article 25. Immigration Act of 1986

The Company warrants on behalf of itself, and all subcontractors engaged in the performance of this Work that only persons authorized to work in the United States pursuant to the Immigration Reform and Control Act of 1986 and other applicable laws shall be employed in the performance of the Work. The Company must comply with Sec. 274A(e) of the Immigration and Nationality Act.

Article 26. Company Non-Discrimination

In the award of subcontracts or in performance of this Work, the Company agrees that it will not engage in, nor permit such subcontractors as it may employ, to engage in discrimination in employment of persons on any basis prohibited by State or Federal law in accordance with FHWA requirements (CFR § 26.13).

Article 27. Federal and State Tax

The Village is exempt from payment of Florida State Sales and Use Taxes. The Company shall not be exempted from paying sales tax to its suppliers for materials used to fulfill contractual obligations with the Village, nor is the Company authorized to use the Village's Tax Exemption Number in securing such materials The Company shall be responsible for payment of its own and its share of its employee taxes and Social Security benefits.

Article 28. Public Records

Florida law provides that municipal records should be open for inspection and copying under Section 119, Florida Statutes, the Public Records law. All information and materials received by the Village in connection with this Contract shall become the property of the

DRAFT

Village and shall be deemed to be public records subject to public inspection. The same responsibility lies on the Company, as it shall keep records and if asked to retrieve them by the Village, they must do so to abide by the Public Records law. IF THE COMPANY HAS QUESTIONS REGARDING THE APPLICATION OF CHAPTER 119, FLORIDA STATUTES TO THE COMPANY'S DUTY TO PROVIDE PUBLIC RECORDS RELATING TO THIS CONTRACT, CONTACT THE CUSTODIAN OF PUBLIC RECORDS: Missy Arocha, marocha@palmettobay-fl.gov or call 305-259- 1234. Further information on Section 119, F.S. can be found https://www.flsenate.gov/Laws/Statutes/2020/0119.0701.

Article 29. Severability

If any term or provision of this Contract shall to any extent be held invalid or illegal by a court of competent jurisdiction, the remainder of this Contract shall not be affected thereby, and each term and provision of this Contract shall be valid and be enforced to the fullest extent permitted by law.

Article 30. E-Verify

In accordance with Chapter 448.095, Florida Statutes, a public employer, Contractor, or subcontractor may not enter into a Contract unless the Consultant/Contractor/Company registers and uses the Federal E-Verify System. Thus, the Authority may not enter into or renew any Contract with a Consultant/Contractor/Company that is not enrolled and uses the E-Verify system, and such Company is obligated to do so. The Village may ask for verification that the Consultant/Contractor/Company has registered and is using the E-Verify system. The Consultant/Contractor/Company may not be barred or penalized because they receive inaccurate information from the E-Verify program and hires or employs an ineligible person. Nothing in this section may be construed to allow intentional discrimination of any class protected by law.

Article 31. Warranty

The Company shall provide the Village will all applicable EXPRESS and IMPLIED warranties received by the manufacturer and/or the supplier of the materials the Company uses to carry out the Contract. The Company specifically agrees that the warranties of MERCHANTIBILITY AND FITNESS FOR PARTICULAR PURPOSES SHALL BE APPLICABLE to work and the materials supplied.

Article 32. Subcontractor

The use of subcontractor is permissible under this Contract provided that the subcontractor must agree to the same terms and conditions as the Company. The Company remains responsible for performance of the Contract terms and conditions. In the event of dissatisfactory performance, the Company is responsible and shall complete the work if required by the Village at the Company's expense.

DRAFT

IN WITNESS WHEREOF the undersigned Parties have executed this Contract on the date indicated above.

(Company Name)

_____ _____

Nick Marano, Village Manager Owner/Principal, Title

Attest:

_____

Village Clerk

Missy Arocha

APPROVED AS TO FORM

_____

Village Attorney

John C. Dellagloria

Attachments to this Solicitation

Exhibit "A": PBP Walkway Repair Replacement **(.PDF FILE)**

Exhibit "B": PBP Walkway Repair Replacement **(.PDF FILE)**

Exhibit "C": CRP Designated Areas of Asphalt Trail **(.PDF FILE)**

Exhibit "D": Biobarrier Root Control System **(.PDF FILE)**

(*Total of 4 .pdf to download with solicitation*)

Phoenix Concrete Plus, Inc.
8900 SW 117th Ave, Suite B-205
Miami, FL 33186
Phone: (786) 443-1016
Email: phoenixconcreteplus@gmail.com

Date: May 13, 2025

Village of Palmetto Bay
9705 E Hibiscus Street
Palmetto Bay, FL 33157

Subject: Bid Submission – BID#: PBP and CRP – Replacement of Designated Areas of Asphalt Walking Trails (No. 2025-12-010)

To Whom It May Concern,

Phoenix Concrete Plus, Inc. is pleased to submit our bid in response to BID#: PBP and CRP – Replacement of Designated Areas of Asphalt Walking Trails (No. 2025-12-010) for the Village of Palmetto Bay.

As a licensed and insured contractor with over 14 years of experience in asphalt construction, we bring the tools, expertise, and workforce to handle this scope of work with efficiency and precision. Our team is experienced in replacing and resurfacing pedestrian asphalt trails, with a focus on quality craftsmanship, site safety, and minimizing community disruption.

Enclosed you will find our complete bid package, including pricing, references, and required documentation. Should you need any additional details or clarification, we are available and ready to assist.

We appreciate the opportunity to be considered and look forward to potentially partnering with the Village on this project.

Sincerely,

Phoenix Concrete Plus

Joseph Perez Jr.

Phoenix Concrete Plus Inc.

President

Cell: 786-443-1016 & 786-389-6093

Website: www.phoenixconcreteplus.com

Sunbiz.org DIVISION of CORPORATIONS
an official State of Florida website

Detail by Entity Name

Florida Profit Corporation
PHOENIX CONCRETE PLUS, INC.

Filing Information

Document Number	P11000003996
FEI/EIN Number	27-4660292
Date Filed	01/12/2011
Effective Date	01/11/2011
State	FL
Status	ACTIVE
Last Event	REINSTATEMENT
Event Date Filed	10/12/2019

Principal Address

8900 SW 117th AVE
Suite #B-205
MIAMI, FL 33186

Changed: 04/28/2022

Mailing Address

8900 SW 117th AVE
Suite #B-205
MIAMI, FL 33186

Changed: 04/07/2023

Registered Agent Name & Address

Perez, Joseph, Sr.
8900 SW 117th AVE
Suite #B-205
MIAMI, FL 33186

Name Changed: 10/15/2020

Address Changed: 04/07/2023

Officer/Director Detail

Name & Address

Title VicePresident, VP

PEREZ, JOSEPH, Sr.
7510 SW 135TH AVE
MIAMI, FL 33183

Title Treasurer

PEREZ, YORMAN
7510 SW 135TH AVE
MIAMI, FL 33183

Title President

Perez, Joseph Alberto, Jr.
7510 SW 135th
Miami, FL 33183

Title Officer

Perez, Jason M
7510 SW 135TH AVE
MIAMI, FL 33183

Title PROJECT EJECUTIVE OFFICER

Perez, Jheremy Jose
7510 SW 135TH AVE
MIAMI, FL 33183

Annual Reports

Report Year	Filed Date
2023	04/07/2023
2024	03/07/2024
2025	03/26/2025

Document Images

03/26/2025 -- ANNUAL REPORT	View image in PDF format
03/07/2024 -- ANNUAL REPORT	View image in PDF format
04/07/2023 -- ANNUAL REPORT	View image in PDF format
04/28/2022 -- ANNUAL REPORT	View image in PDF format
01/26/2021 -- ANNUAL REPORT	View image in PDF format
10/15/2020 -- AMENDED ANNUAL REPORT	View image in PDF format
06/08/2020 -- ANNUAL REPORT	View image in PDF format
12/11/2019 -- AMENDED ANNUAL REPORT	View image in PDF format
10/12/2019 -- REINSTATEMENT	View image in PDF format
04/28/2018 -- ANNUAL REPORT	View image in PDF format
02/25/2017 -- ANNUAL REPORT	View image in PDF format
04/29/2016 -- ANNUAL REPORT	View image in PDF format
06/01/2015 -- AMENDED ANNUAL REPORT	View image in PDF format

PhoeniX
CONCRETE PLUS

8900 SW 117TH AVE. SUITE # B-205 MIAMI FL, 33186
(786) 443-1016 & (786) 375-0878

Contractor's Home Office Organizational Chart

1. Executive Leadership

- **President/ CEO –** *Joseph Perez Sr (Officer)*
- **Vice President /COO-** *Joseph Perez Jr (Officer)*

2. Administrative & Operations Support

- **Office Manager** *-Madeline Noda*
- **Executive Assistant / Administrative Assistant –** *Fanilo Lambo*

3. Estimating & Preconstruction

- **Estimator-** *Darian Wong*

4. Project Management

- **Director of Project Management-** *Joseph Perez Jr*

5. Finance & Accounting

- **Controller / CFO-** *Yorman Perez (Officer)*
- **Accounts Payable/Receivable Clerks-** *Suzelle Perez*

6. Safety & Compliance

- **Safety Director / Safety Coordinator-** *Yorman Perez*

PhoeniX
CONCRETE PLUS

8900 SW 117TH AVE. SUITE # B-205 MIAMI FL, 33186
(786) 443-1016 & (786) 375-0878

Statement Regarding Legal and Contractual History

Phoenix Concrete Plus Inc. hereby affirms that:

a) No bankruptcy petitions have been filed by or against the company or any of its predecessor organizations.
b) The company has not been involved in any arbitration or civil or criminal proceedings.
c) The company has not been suspended or debarred from bidding by any public agency within the last five (5) years.

As such, none of the items listed in Section 5 are applicable to Phoenix Concrete Plus Inc.

4.1: Bid Form

ITB# 2025-12-010
PBP and CRP – Replacement of Designated Areas of Asphalt Walking Trails

Replacement of the Existing Asphalt Walkway Trails at Coral Reef Park:

Total Bid Amount..... $ 47,437.48
Total Bid Amount (in words) FORTY SEVEN THOUSAND FOUR HUNDRED THIRTY SEVEN DOLLARS AND FORTY EIGHT CENTS
Total Sq Ft 5,963 Unit Cost Per Sq Ft $7.96

Replacement of the Existing Asphalt Walkway Trails at Palmetto Bay Park:

Total Bid Amount..... $ 77,173.28
Total Bid Amount (in words) SEVENTY SEVEN THOUSAND ONE HUNDRED SEVENTY THREE DOLLARS AND TWENTY-EIGHT CENTS
Total Sq Ft 9,730 Unit Cost Per Sq Ft $7.93

Grand Total Bid Amount.....$ 124,610.76
Grand Total Bid Amount (in words):
ONE HUNDRED TWENTY-FOUR THOUSAND SIX HUNDRED TEN DOLLARS AND SEVENTY-SIX CENTS

Signature of Official:
Name: Joseph A. Perez
Title: President
Company: PHOENIX CONCRETE PLUS, INC.
Date: 05/15/2025

The Bid Form is presented to assist the Village in evaluating the Bid. This Bid Form reflects estimated quantities for the Total Bid as described above. After award, the Village reserves the right to modify estimated quantities subject to the unit price and eliminate line items if necessary. Payment shall be made for the items listed on the Bid Form on the basis of the Work actually performed and completed. Please note that it is the responsibility of the Bidder to accurately measure to provide correct costs on the bid form.

The price listed by the Bidder shall include the total cost to complete the Work including but not limited to materials, labor, equipment, bonds, insurances, etc., as necessary to ensure proper delivery of services and product requested by the Village.

I hereby certify that I am authorized to act on behalf of the Company, individual, partnership, corporation or association making this proposal and that all statements made in this document are true and correct to the best of my knowledge. I understand and agree to be bound by the conditions contained in this ITB and shall conform with all requirements of the ITB.

SECTION 8.0: Required Bid Submittal Forms

DRUG-FREE WORKPLACE CERTIFICATION

In order to have a drug-free workplace program, a business shall:

1) Publish a statement notifying employees that the unlawful manufacture, distribution, dispensing, possession, or use of a controlled substance is prohibited in the workplace and specifying the actions that will be taken against employees for violations of such prohibition.
2) Inform employees about the dangers of drug abuse in the workplace, the business' policy of maintaining a drug-free workplace, any available drug counseling, rehabilitation, and employee assistance programs, and the penalties that may be imposed upon employees for drug abuse violations.
3) Give each employee engaged in providing the commodities or contractual services that are under Bid a copy of the statement specified in Subsection (1).
4) In the statement specified in Subsection (1), notify the employees, that, as a condition of working of the commodities or contractual services that are under Bid, the employee will abide by the terms of the statement and will notify the employee of any conviction of, or plea of guilty or nolo contendere to, any violation of Chapter 893 or of any controlled substance law of the United States or any state, for a violation occurring in the workplace no later than five (5) days after such conviction.
5) Impose a sanction on, or require the satisfactory participation in a drug abuse assistance or rehabilitation program, if such is available in the employee's community, by any employee who is so convicted.
6) Make a good faith effort to continue to maintain a drug-free workplace through implementation of this section.

As the person authorized to sign the statement, I certify that this Company complies fully with the above requirements.

Signature of Official: _____

Name (typed): JOSEPH A. PEREZ

Title: PRESIDENT

Company: PHOENIX Concrete Plus, INC.

Date: 05/13/2025

SUBCONTRACTOR LIST

The Company shall list all proposed Subcontractors to be used on this project if they are awarded the Contract.

Classification of Work	Subcontractor Name	Address	Telephone and Fax
N/A	N/A	N/A	N/A

REFERENCES

Each bid must be accompanied by a list of at least ***three (3)*** references from current customers, preferably in the public sector, which shall include all the information requested below. **The Village should not be listed as one of the references provided.**

MIAMI-DADE COUNTY, FLORIDA

Capital Improvements Information System

Public Housing and Community Development

Contractor Evaluation

MCC Contract: HD 87916
Contractor: PHOENIX CONCRETE PLUS, INC.
Department Contact: Anaely Rodriquez 305-606-6486
Site Project Name: Emergency Parking Lot Repairs
Site Location: Palmetto Gardens 16850 NW 55 AVE

Evaluation Type: Standard Evaluation
FEIN: 274660292
Award Amount: $79,562.75

Evaluator ID: asaez Date: 8/21/2024 Period: Project conclusion or closeout

Rating *						
	4	3	2	1	N/A	Criteria
1-	✓					Schedule - Quality of schedule & adherence to schedule resulting in timeliness and minimizing delay to the owner and community.
2-	✓					Cost effectiveness & efficiency - Budget compliance & value of work.
3-					✓	Vision - Design - Concepts or adherence to criteria.
4-	✓					Cooperation - Teamwork & relationship with owner, subs and suppliers.
5-	✓					Coordination - Ability to organize, schedule and complete tasks in adherence to the schedule.
6-	✓					Accuracy & Technical Skills - Cost estimating, scheduling, shop and other drawings, plans, manuals, project documentation and conflict resolution.
7-	✓					Completeness - Compliance with contract documents, permits, Codes & standards.
8-	✓					Responsiveness - Timely, clear & concise responses to owner comments and correspondence.
9-	✓					Commitment - Intangibles & contribution to project success.
10-	✓					Personnel - Quality and dedication of project staff.
11-	✓					Management - Leadership ability.
12-	✓					Quality - Work performed correctly the first time.

Overall Performance Average: 4.0

Documentation that supports this evaluation and Contractor's/Consultant's comments can be obtained by contacting:
ANAELY RODRIGUEZ at Phone# 305-606-6486

Evaluation Reviewed by: Supervisor ☑ Division Chief ☐ Assistant Director ☐ Director ☐
Reviewer Name: Anaely Rodriquez Reviewer Signature: A. Rodriguez

The method of delivery of this evaluation to contractor/consultant: Certified Mail ☐ EMail ☐ Fax ☑ Hand ☐
(Unresponsive Performance by contractor/consultant requires 2 delivery methods, one MUST be Certified Mail.)
Evaluation delivered to:

Public Housing and Community Development
701 NW 1ST CT,
16th
Miami, FL 33136
305-606-6486

miamidade.gov

MIAMI-DADE COUNTY
Daniella Levine Cava, Mayor

June 8, 2024

Public Housing and Community Development (PHCD)

Joseph A Perez Jr
PHOENIX CONCRETE PLUS, INC.
7510 SW 135th Ave
Miami, FL 33183

CERTIFIED MAIL No:
TELEPHONE: (786) 443-1016

Re: Recommendation for Award for MCC 7360 Plan - RPQ NO: 87916
Emergency Parking Lot Repairs Palmetto Gardens Site 160
16850 NW 55th Ave Miami FL 33055

Dear Joseph A Perez Jr:

In accordance with Sections 2-8.3 and 2-8.4 of the Code of Miami-Dade County and Implementing Order 3-21, this letter serves to notify you and all bidders on this solicitation that your firm has been recommended for award of the referenced Request for Price Quotation (RPQ) based on the bid submitted on Saturday, June 8, 2024. Pursuant to the referenced legislation, the three (3) day protest period shall commence upon the posting of this recommendation to award. This contract award will be effective only in accordance with the conditions of the solicitation, which requires execution by both parties of the Notice to Proceed (NTP).

The value at award is $79,562.75. The contract term is 10 calendar days. The award is contingent upon the submission and approval of Insurance Certificates listing the required coverage for General Liability, Auto Liability (Owned, Non-owned and Hired Vehicles) and Workers Compensation as required by Florida Statue Chapter 440. Additional documents may be required as listed below:

Emergency Parking Lot Repairs Palmetto Gardens Site 160

The preceding Documents are required as outlined within the RPQ project specification. They must be submitted to the Public Housing and Community Development within 10 business days of receipt of this letter. In the event additional insurance is required, it also must be submitted within 10 business days. Failure to submit the documents within the specified time frame, or an extension approved by the County, will result in the award being rescinded.

Subsequent to the review and approval of the referenced documents, you are required to obtain the necessary permits in the time frame stipulated in the RPQ. Upon obtaining the permit(s), copies must be submitted to the Project Manager prior to commencement of work. No work is to be performed without a permit (if applicable). Following receipt of the permit(s), the Project Manager may schedule a pre-construction conference and issue a Notice to Proceed authorizing the performance of the work.

This letter shall also serve as a reminder that all work must be performed in accordance with the scope of work and contract terms and conditions, all permits and inspections and in accordance with all applicable Federal, State and local laws, codes and regulations. Should you have any questions please contact Anaely Rodriquez, Project Manager, at 305-606-6486.

Sincerely,

Anaely Rodriquez
Site Manager

CC: Clerk of the Board

MIAMI-DADE COUNTY
Daniella Levine Cava
Mayor

Housing and Community Development
701 NW 1st Court, 16th Floor
Miami, FL 33136-3914
T 786-469-4100 • F 786-469-4199
miamidade.gov

February 19, 2025

Letter of Recommendation

To Whom It May Concern,

I am pleased to provide this reference for **Phoenix Concrete Plus Inc.**, a company that has consistently demonstrated professionalism, expertise and exceptional quality in completing a variety of repair projects across multiple Public Housing Developments.

Phoenix Concrete Plus has successfully handled a range of repair projects, including parking lot repairs, building erosion remediation, and other essential structural improvements. Their attention to detail, efficiency, and commitment to delivering durable, high-quality work have made a significant impact on our developments.

Moreover, their staff is knowledgeable, reliable, and consistently maintains clear communication while demonstrating a strong commitment to meeting project deadlines. Their dedication to excellence and problem-solving approach has made them a trusted partner in ensuring the integrity and safety of our properties.

Based on my experience working with Phoenix Concrete Plus, I highly recommend them for any concrete repair or construction-related projects. If you require any further information, please feel free to contact me at 786-469-4113 (Office), 305-606-6486 (Cell) or by email at anaely.rodriguez@miamidade.gov.

Sincerely,

Anaely Rodriguez
Regional Coordinator

MIAMI-DADE COUNTY, FLORIDA

Capital Improvements Information System

Department of Transportation and Public Works

Contractor Evaluation

MCC Contract: MT 20210253
Contractor: PHOENIX CONCRETE PLUS, INC.
Department Contact: Valaree Gough
Site Project Name: Intersection Improvements - Multiple Sites
Site Location: Multiple of Site Locations

Evaluation Type: Standard Evaluation
FEIN: 274660292
Award Amount: $1,530,772.00

Evaluator ID: E327060 Date: 5/31/2023 Period: Interim

Rating *						
	4	3	2	1	N/A	Criteria
1-	✓					Schedule - Quality of schedule & adherence to schedule resulting in timeliness and minimizing delay to the owner and community.
2-	✓					Cost effectiveness & efficiency - Budget compliance & value of work.
3-	✓					Vision - Design - Concepts or adherence to criteria.
4-	✓					Cooperation - Teamwork & relationship with owner, subs and suppliers.
5-	✓					Coordination - Ability to organize, schedule and complete tasks in adherence to the schedule.
6-	✓					Accuracy & Technical Skills - Cost estimating, scheduling, shop and other drawings, plans, manuals, project documentation and conflict resolution.
7-	✓					Completeness - Compliance with contract documents, permits, Codes & standards.
8-	✓					Responsiveness - Timely, clear & concise responses to owner comments and correspondence.
9-	✓					Commitment - Intangibles & contribution to project success.
10-	✓					Personnel - Quality and dedication of project staff.
11-	✓					Management - Leadership ability.
12-	✓					Quality - Work performed correctly the first time.

Overall Performance Average: 4.0

Documentation that supports this evaluation and Contractor's/Consultant's comments can be obtained by contacting:

Juan Gonzalez at Phone# 305-608-9702

Evaluation Reviewed by: Supervisor ☑ Division Chief ☐ Assistant Director ☐ Director ☐

Reviewer Name: Mercedes Barreras Reviewer Signature: _____

The method of delivery of this evaluation to contractor/consultant: Certified Mail ☐ EMail ☑ Fax ☐ Hand ☐

(Unresponsive Performance by contractor/consultant requires 2 delivery methods, one MUST be Certified Mail.)

Evaluation delivered to: Phoenix Concrete Plus, Inc.

* Rating Key

4 Superior performance - Exemplary quality, no intervention required - project completed on time or early at or below budget with no change orders or amendments other than owner requested changes.

3 Satisfactory performance - Minor errors noted, addressed with timely corrective action. No serious errors noted or corrective action needed.

2 Guarded performance Errors and Omissions documented in writing with timely corrective action.

1 Unresponsive performance documented in writing without timely corrective action.

N/A. No Information

MIAMI-DADE COUNTY, FLORIDA

Capital Improvements Information System

Water and Sewer

Contractor Evaluation

MCC Contract: WS T2730
Contractor: PHOENIX CONCRETE PLUS, INC.
Department Contact: Marcos A. Caines 786-552-4367
Site Project Name:
Site Location:

Evaluation Type: Standard Evaluation
FEIN: 274660292
Award Amount: $302,200.00

Evaluator ID: rstebb Date: 5/3/2023 Period: Project conclusion or closeout

Rating *						
	4	3	2	1	N/A	Criteria
1-	✓					Schedule - Quality of schedule & adherence to schedule resulting in timeliness and minimizing delay to the owner and community.
2-	✓					Cost effectiveness & efficiency - Budget compliance & value of work.
3-	✓					Vision - Design - Concepts or adherence to criteria.
4-	✓					Cooperation - Teamwork & relationship with owner, subs and suppliers.
5-	✓					Coordination - Ability to organize, schedule and complete tasks in adherence to the schedule.
6-	✓					Accuracy & Technical Skills - Cost estimating, scheduling, shop and other drawings, plans, manuals, project documentation and conflict resolution.
7-	✓					Completeness - Compliance with contract documents, permits, Codes & standards.
8-	✓					Responsiveness - Timely, clear & concise responses to owner comments and correspondence.
9-	✓					Commitment - Intangibles & contribution to project success.
10-		✓				Personnel - Quality and dedication of project staff.
11-	✓					Management - Leadership ability.
12-	✓					Quality - Work performed correctly the first time.

Overall Performance Average: 3.9

Documentation that supports this evaluation and Contractor's/Consultant's comments can be obtained by contacting:

Marcos Caines at Phone# 305-552-4367

Evaluation Reviewed by: Supervisor ☑ Division Chief ☐ Assistant Director ☐ Director ☐

Reviewer Name: Robert Stebbins Jr., Reviewer Signature:

The method of delivery of this evaluation to contractor/consultant: Certified Mail ☐ EMail ☐ Fax ☐ Hand ☑

(Unresponsive Performance by contractor/consultant requires 2 delivery methods, one MUST be Certified Mail.)

Evaluation delivered to: Joseph Perez Jr.

* Rating Key

4 Superior performance - Exemplary quality, no intervention required - project completed on time or early at or below budget with no change orders or amendments other than owner requested changes.

3 Satisfactory performance - Minor errors noted, addressed with timely corrective action. No serious errors noted or corrective action needed.

2 Guarded performance Errors and Omissions documented in writing with timely corrective action.

1 Unresponsive performance documented in writing without timely corrective action.

N/A. No Information

K.S SP.

ACKNOWLEDGEMENT, WARRANTY AND ACCEPTANCE

A. Company warrants that it is willing and able to comply with all applicable Village laws, rules and regulations.

B. Company warrants that they have read, understand and are willing to comply with all of the requirements of the ITB and the addendum/ addenda nos.

C. Company warrants that it will not delegate or sub-contract its responsibilities under an agreement without the prior written permission of the Council.

D. Company warrants that all information provided by it in connection with this bid is true and accurate.

E. CONTINGENCY FEE AND CODE OF ETHICS WARRANTY:

Company warrants that neither it, nor any principal, employee, agent, representative or family member has promised to pay, and Company has not, and will not, pay a fee for the amount of which is contingent upon the Village awarding this contract. Company warrants that neither it, nor any principal, employee, agent, representative has procured, or attempted to procure, this contract in violation of any of the provisions of the Village conflict of interest and code of ethics ordinances. Further, Company acknowledges that a violation of this warranty will result in the termination of the contract and forfeiture of funds paid, or to be paid, to the Company, if the Company is chosen for performance of the contract.

Signature of Official: _____

Name (typed): JOSEPH A. PEREZ

Title: PRESIDENT

Company: Phoenix Concrete Plus Inc.

Date: 05/13/2025

NON-COLLUSIVE AFFIDAVIT

STATE OF FLORIDA }
} SS:
COUNTY OF MIAMI-DADE }

JOSEPH A. PEREZ being first duly sworn, deposes and says that:

(1) He/she is the, (Owner, Partner, Officer, Representative or Agent) of: Phoenix Concrete Plus Inc. the Company that has submitted the attached Bid;

(2) He/she is fully informed respecting the preparation and contents of the attached Bid and of all pertinent circumstances respecting such Bid;

(3) Such Bid is genuine and is not a collusive or a sham Bid;

(4) Neither the said Company nor any of its officers, partners, owners, agents, representatives, employees or parties in interest, including this affiant, have in any way colluded, conspired, connived or agreed, directly or indirectly, with any other Company or person to submit a collusive or sham response in connection with the work for which the attached bid has been submitted, or to refrain from responding in connection with such work, or have in any manner, directly or indirectly, sought by agreement or collusion, communication, or conference with any Company or person to fix this Bid or to secure through any collusion, conspiracy, connivance, or unlawful agreement, any advantage against the Village of Palmetto Bay, or any person interested in the proposed Work;

Signed, sealed and delivered
In the presence of

Signature of Official: 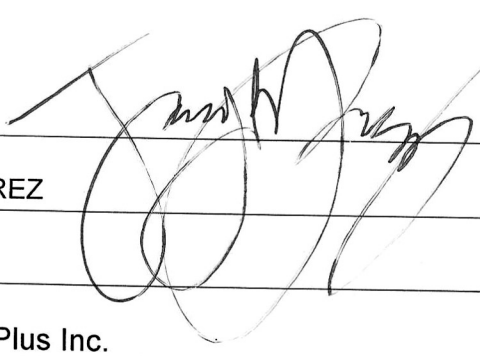

Name (typed): JOSEPH A. PEREZ

Title: PRESIDENT

Company: Phoenix Concrete Plus Inc.

Date: 05/13/2025

Continued Next Page

ACKNOWLEDGMENT

State of Florida

County of Miami-Dade

On this May 15th day of, 20 25, before me, the undersigned Notary Public of the State of Florida personally appeared Joseph Perez and whose name(s) is/are subscribed to the within instrument, and he/she/they acknowledge that he/she/they executed it.

WITNESS my hand and official seal

Suzelle Perez

NOTARY PUBLIC, STATE OF FLORIDA

SUZELLE MERI PEREZ
Notary Public - State of Florida
Commission # HH 441660
My Comm. Expires Sep 7, 2027
Bonded through National Notary Assn.

SWORN STATEMENT PURSUANT TO SECTION 287.133 (3)(a) FLORIDA STATUES, ON PUBLIC ENTITY CRIMES

THIS FORM MUST BE SIGNED AND SWORN TO IN THE PRESENCE OF A NOTARY PUBLIC OR OTHER OFFICIAL AUTHORIZED TO ADMINISTER OATHS.

1. This sworn statement is submitted to the Village of Palmetto Bay, Florida

By JOSEPH A. PEREZ

For Phoenix Concrete Plus Inc.

Whose business address is: 8900 SW 117th Ave Suite # B-205, Miami, FL 33186

And (if applicable) its Federal Employer Identification Number (FEIN) is: 27-4660292

2. I understand that a "public entity crime" as defined In Paragraph 287.133(1)(g), Florida Statutes ,and as may be amended means a violation of any state or federal law by a person with respect to and directly related to the transaction of business with any public entity or with any agency or political subdivision of any other State or of the United States, including, but not limited to, any Proposal or contract for goods or services to be provided to any public entity or an agency or any political subdivision of any other state or of the United Sates and involving antitrust fraud, theft, bribery, collusion, racketeering, conspiracy, or material misrepresentation

3. I understand that "convicted" or "conviction"" as defined in Paragraph 287.133(1)(b), Florida Statutes means a finding of guilt or a conviction of a public entity crime, with or without an adjudication of guilt, in any federal or state trial court of record relating to charges brought by indictment or information after July 1, 1989, as a result or a jury verdict, non-jury trial, or entry of a plea or guilty or nab contenders.

4. I understand that an "affiliate" as defined in Paragraph 287.133(1)(a), Florida Statutes, and means:

A. A predecessor or successor of a person convicted of a public entity crime; or
B. An entity under the control of any natural person who is active in the management of the entity and who has been convicted of a public entity crime. The term "affiliate"" includes those officers, directors, executives, partners, shareholders, employees, members, and agents who are active in the management of an affiliate. The ownership by one person of shares constituting a controlling Interest in another person, ore pooling of equipment or income among persons when not for fair market value under an arm's length agreement, shall be a prima facie case that one person controls another person. A person who knowingly enters into a joint venture with a person who has been convicted of a public entity crime in Florida during the preceding 36 months shall be considered an affiliate.

5. I understand that a "person" as defined in Paragraph 287.133(1)(e), Florida Statutes, means any natural person or entity organized under the laws or any state or of the United States with the legal power to enter into a binding contract and which Bids or applies to Bids on contracts for the provision of goods or services let by a public entity, or which otherwise transacts or applies to transact business with a public entity. The term "person" includes those officers, directors, executives, partners, shareholders, employees, members, and agents who are active in management of any entity.

Signed, sealed and delivered in the presence:

Signature of Official: _____

Name (typed): JOSEPH A. PEREZ

Title: PRESIDENT

Company Name: PHOENIX CONCRETE PLUS, INC.

Date: 05/13/2025

ACKNOWLEDGMENT

State of Florida

County of Miami Dade

On this May 15th day of, 2025, before me, the undersigned Notary Public of the State of Florida personally appeared Joseph Perez and whose name(s) is/are subscribed to the within instrument, and he/she/they acknowledge that he/she/they executed it.

WITNESS my hand and official seal

Suzelle Perez / Suzette

NOTARY PUBLIC, STATE OF FLORIDA

SUZELLE MERI PEREZ
Notary Public - State of Florida
Commission # HH 441660
My Comm. Expires Sep 7, 2027
Bonded through National Notary Assn.

AMERICANS WITH DISABILITIES ACT (ADA)
DISABILITY NONDISCRIMINATION STATEMENT

THIS FORM MUST BE SIGNED AND SWORN TO IN THE PRESENCE OF A NOTARY PUBLIC OR OTHER OFFICIAL AUTHORIZED TO ADMINISTER OATHS.

This sworn statement is submitted to the VILLAGE OF PALMETTO BAY, FLORIDA

by: JOSEPH A. PEREZ/ PRESIDENT

(print individual's name and title)

for: Phoenix Concrete Plus Inc.

(print name of entity submitting sworn statement)

whose business address is: 8900 SW 117th Ave Suite # B-205, Miami, FL 33186

and (if applicable) its Federal Employer Identification Number (FEIN) is: 27-4660292

I, being duly first sworn state: That the above named Company, corporation or organization is in compliance with and agreed to continue to comply with, and assure that any sub-contractor, or third party contractor under this project complies with all applicable requirements of the laws listed below including, but not limited to, those provisions pertaining to employment, provision of programs and services, transportation, communications, access to facilities, renovations, and new construction.

The American with Disabilities Act of 1990 (ADA), Pub. L. 101-336, 104 Stat 327, 42 USC 1210112213 and 47 USC Sections 225 and 661 including Title I, Employment; Title II, Public Services; Title III, Public Accommodations and Services Operated by Private entities; Title IV, Telecommunications; and Title V, Miscellaneous Provisions, and as any may be amended.

The Florida Americans with Disabilities Accessibility Implementation Act of 1993, Section 553.501-553.513, Florida Statutes:
The Rehabilitation Act of 1973, 229 USC Section 794;
The Federal Transit Act, as amended 49 USC Section 1612;
The Fair Housing Act as amended 42 USC Section 3601-3631.

Continued Next Page

Signature of Official: _____

Name (typed): JOSEPH A. PEREZ

Title: PRESIDENT

Company: Phoenix Concrete Plus Inc.

Date: 05/13/2025

ACKNOWLEDGMENT

State of Florida

County of Miami - Dade

On this May 15th day of, 2025, before me, the undersigned Notary Public of the State of Florida personally appeared Joseph Perez and whose name(s) is/are subscribed to the within instrument, and he/she/they acknowledge that he/she/they executed it.

WITNESS my hand and official seal

Suzelle Perez
NOTARY PUBLIC, STATE OF FLORIDA

SUZELLE MERI PEREZ
Notary Public - State of Florida
Commission # HH 441660
My Comm. Expires Sep 7, 2027
Bonded through National Notary Assn.

BUSINESS ENTITY AFFIDAVIT

Bidder or Company hereby recognizes and certifies that no elected official, or employee of the Village of Palmetto Bay (the "Village") shall have a financial interest directly or indirectly in this transaction or any compensation to be paid under or through this transaction, and further, that no Village employee, nor any elected or appointed officer (including Village board members) of the Village, nor any spouse, parent or child of such employee or elected or appointed officer of the Village, may be a partner, officer, director or proprietor of Bidder or Company, and further, that no such Village employee or elected or appointed officer, or the spouse, parent or child of any of them, alone or in combination, may have a material interest in the Company or Bidder. Material interest means direct or indirect ownership of more than five percent (5%) of the total assets or capital stock of the Company or Bidder. Any exception to these above-described restrictions must be expressly provided by applicable law or ordinance and be confirmed in writing by Village. Further, Bidder or Company recognizes that with respect to this transaction or bid, if any Bidder or Company violates or is a party to a violation of the ethics ordinances or rules of the Village, the provisions of Miami-Dade County Code Section 2-11.1, as applicable to Village, Village Charter Section 7.6 (Lobbyist), or the provisions of Chapter 112, part III, Fla. Stat., the Code of Ethics for Public Officers and Employees and as may be amended, such Bidder or Company may be disqualified from furnishing the goods or services for which the bid or proposal is submitted and may be further disqualified from submitting any future bids or proposals for goods or services to Village.

Accordingly, Bidder or Company completes and executes the Business Entity Affidavit form below. The terms "Bidder" or "Company," as used herein, include any person or entity making a bid proposal herein to Village or providing goods or services to Village.

I, JOSEPH A. PEREZ being first duly sworn state:

The full legal name and business address of the person(s) or entity contracting or transacting business with the Village of Palmetto Bay ("Village") are (Post Office addresses are not acceptable), as follows:

27-4660292

Federal Employer Identification Number (If none, Social Security Number)

Phoenix Concrete Plus Inc.

Name of Entity, Individual, Partners or Corporation

Doing Business As (If same as above, leave blank)

8900 SW 117th Ave Suite # B-205, Miami, FL 33186

Street Address Suite Village State Zip Code

Continued Next Page

OWNERSHIP DISCLOSURE AFFIDAVIT

1. If the contact or business transaction is with a corporation, the full legal name and business address shall be provided for each officer and director and each stockholder who holds directly or indirectly five percent (5%) or more of the corporation's stock. If the contract or business transaction is with a trust, the full legal name and address shall be provided for each trustee and each beneficiary. All such names and addresses are (Post Office addresses are not acceptable), as follows:

Full Legal Name	Address	Ownership
JOSEPH A. PEREZ	8900 SW 117th Ave Suite # B-205	40 %
JOSEPH PEREZ	8900 SW 117th Ave Suite # B-205	18 %
YORMAN PEREZ	8900 SW 117th Ave Suite # B-205	26 %

2. The full legal names and business address of any other individual (other than sub-contractors, material men, suppliers, laborers, or lenders) who have, or will have, any interest (legal, equitable, beneficial or otherwise) in the contract or business transaction with the Village are (Post Office addresses are not acceptable), as follows:

N/A

Signature of Official: _____

Name (typed): JOSEPH A. PEREZ

Title: PRESIDENT

Company: Phoenix Concrete Plus Inc.

Date: 05/13/2025

Continued Next Page

ACKNOWLEDGMENT

State of Florida

County of Miami-Dade

On this May 15th day of, 2025, before me, the undersigned Notary Public of the State of Florida personally appeared Joseph Perez and whose name(s) is/are subscribed to the within instrument, and he/she/they acknowledge that he/she/they executed it.

WITNESS my hand and official seal

Suzelle Perez
NOTARY PUBLIC, STATE OF FLORIDA

SUZELLE MERI PEREZ
Notary Public - State of Florida
Commission # HH 441660
My Comm. Expires Sep 7, 2027
Bonded through National Notary Assn.

ACKNOWLEDGMENT OF CONFORMANCE WITH OSHA STANDARDS

To the Village of Palmetto Bay,

We Phoenix Concrete Plus Inc. Bidder, Proposer, or Company, hereby acknowledge and agree that we, as the Prime Company for Village of Palmetto Bay Village of Palmetto Bay, ITB# 2025-12-010, as specified, have the sole responsibility for compliance with all the requirements of the Federal Occupational Safety and Health Act of 1970 and as may be amended, and all State and local safety and health regulations, and agree to indemnify and hold harmless the Village of Palmetto Bay, against any and all liability, claims, damages losses and expenses they may incur due to the failure of : N/A (Sub-Contractor's Names) to comply with such act or regulation.

Signature of Official: _____

Name (typed): JOSEPH A. PEREZ

Title: PRESIDENT

Company Name: Phoenix Concrete Plus Inc.

Date: 05/13/2025

ACKNOWLEDGMENT

State of Florida

County of Miami-Dade

On this May 15th day of, 2025, before me, the undersigned Notary Public of the State of Florida personally appeared Joseph Perez and whose name(s) is/are subscribed to the within instrument, and he/she/they acknowledge that he/she/they executed it.

WITNESS my hand and official seal

Suzelle Perez
NOTARY PUBLIC, STATE OF FLORIDA

SUZELLE MERI PEREZ
Notary Public - State of Florida
Commission # HH 441660
My Comm. Expires Sep 7, 2027
Bonded through National Notary Assn.

VILLAGE OF PALMETTO BAY
ANTI-KICKBACK AFFIDAVIT

STATE OF FLORIDA }
} SS:
COUNTY OF MIAMI-DADE }

I, the undersigned, hereby duly sworn, depose and say that no portion of the sum herein bid will be paid to any employees of the Village of Palmetto Bay, its elected officials, and Phoenix Concrete Plus Inc. or its employees, as a commission, kickback, reward or gift, directly or indirectly by me or any member of my Company or by an officer of the corporation.

Signature of Official: _____

Name (typed): JOSEPH A. PEREZ

Title: PRESIDENT

Company Name: Phoenix Concrete Plus, INC.

Date: 05/13/2025

ACKNOWLEDGMENT

State of Florida

County of Miami-Dade

On this May 15th day of, 2025, before me, the undersigned Notary Public of the State of Florida personally appeared Joseph Perez and whose name(s) is/are subscribed to the within instrument, and he/she/they acknowledge that he/she/they executed it.

WITNESS my hand and official seal

Suzelle Perez
NOTARY PUBLIC, STATE OF FLORIDA

SUZELLE MERI PEREZ
Notary Public - State of Florida
Commission # HH 441660
My Comm. Expires Sep 7, 2027
Bonded through National Notary Assn.

STATEMENT OF PAST CONTRACT DISQUALIFICATIONS

The Bidder, Proposer, or Company shall state whether it or any of its officers or employees who have a proprietary interest in it, has ever been disqualified, removed, or otherwise prevented from bidding on, or completing a federal, state, or local government project because of the violation of law, a safety regulation, or for any other reason, including but not limited to financial difficulties, project delays, or disputes regarding work or product quality, and if so to explain the circumstances.

Do you have any disqualification as described in the above paragraph to declare?

Yes or No, If yes, explain the circumstances.

NO

Executed on May 15th 2025 at 8900 SW 117th Ave Suite B-205 Miami, FL 33186 under penalty of perjury of the laws of the State of Florida, that the foregoing is true and correct.

Signature of Official: _____

Name (typed): JOSEPH A. PEREZ

Title: PRESIDENT

Company Name: Phoenix Concrete Plus Inc.

Date: 05/13/2025

E-VERIFY AFFIDAVIT

STATE OF Florida

COUNTY OF Miami-Dade

I, JOSEPH A. PEREZ (the individual attesting below), being duly authorized by and on behalf of Phoenix Concrete Plus Inc. (hereinafter "Employer") after first being duly sworn hereby swears or affirms as follows:

1. Employer understands that E-Verify is the federal E-Verify program operated by the United States Department of Homeland Security and other federal agencies, or any successor or equivalent program used to verify the work authorization of newly hired employees pursuant to federal law in accordance with NCGS §64-25(5), and as the same may be amended.
2. Employer understands that Employers Must Use E-Verify. Each employer, after hiring an employee to work in the United States, shall verify the work authorization of the employee through E-Verify in accordance with NCGS §64-26(a), and as the same may be amended.
3. Employer's subcontractors will comply with E-Verify, and Employer will ensure compliance with E-Verify by any and all subcontractors subsequently hired by Employer.

This 15 day of May, 2025.

Signature of Affiant

Print or Type Name: JOSEPH A. PEREZ

State of Florida

County of Miami-Dade

Signed and sworn to (or affirmed) before me, this

the 15th day of May, 2025.

My Commission Expires: Sep 7th, 2027.

Suzelle Perez / Suzelle Perez

Notary Public

NHCS – E-Verify 081815

SUZELLE MERI PEREZ
Notary Public - State of Florida
Commission # HH 441660
My Comm. Expires Sep 7, 2027
Bonded through National Notary Assn.

An official website of the United States government Here's how you know

E-Verify

Menu

My Company Account

My Company Profile

Company Information

Company Name
Phoenix Concrete Plus

Company ID
1279499

Employer Identification Number (EIN)
274660292

DUNS Number
025588165

NAICS Code
238

Subsector
Specialty Trade Contractors

Doing Business As (DBA) Name

Enrollment Date
Mar 12, 2018

Unique Entity Identifier (UEI)

Total Number of Employees
10 to 19

Sector
Construction

Edit Company Information

Employer Category

Employer Category
None of these categories apply

Edit Employer Category

Company Addresses

Hiring Sites

Physical Address

7510 SW 135th AVE
Miami, FL 33183

Mailing Address

Same as Physical Address

Edit Company Addresses

⚠ We have implemented a new policy and require more information for existing and future hiring sites.

Number of Sites

1

Edit Hiring Sites

Company Access

My Company is configured to:

Verify Its Own Employees

Memorandum of Understanding

View Current MOU

Foreign Country of Concern Attestation

Capitalized terms used herein have the definitions ascribed in section 287.138, F.S.

Name of Company is not owned by the government of a Foreign Country of Concern, is not organized under the laws of nor has its principal place of business in a Foreign Country of Concern, and the government of a Foreign Country of Concern does not have a Controlling Interest (twenty five percent (25%) or more) in the Company.

Under penalties of perjury, I declare that I have read the forgoing statement and that the facts stated in it are true.

Printed Name: JOSEPH A. PEREZ

Title: PRESIDENT

Signature: _____ Date: 05/15/25

Affidavit Attesting to Noncoercive Conduct for Labor or Services

Nongovernment Entity name: Phoenix Concrete Plus Inc. ("**Company**")

Vendor FEIN: 27-4660292

Address: 8900 SW 117th Ave Suite # B-205

City: MIAMI State: FL Zip: 33186

Phone number: 786-443-1016 Email Address: phoenixconcreteplus@gmail.com

As a nongovernmental entity executing, renewing, or extending a contract with a government entity, **Company** is required to provide an affidavit under penalty of perjury attesting that **Company** does not use coercion for labor or services in accordance with Section 787.06, Florida Statutes.

As defined in Section 787.06(2)(a), coercion means:

1. Using or threating to use physical force against any person;
2. Restraining, isolating, or confining or threating to restrain, isolate, or confine any person without lawful authority and against her or his will;
3. Using lending or other credit methods to establish a debt by any person when labor or services are pledged as a security for the debt, if the value of the labor or services as reasonably assessed is not applied toward the liquidation of the debt, the length and nature of the labor or service are not respectively limited and defined;
4. Destroying, concealing, removing, confiscating, withholding, or possessing any actual or purported passport, visa, or other immigration document, or any other actual or purported government identification document, of any person;
5. Causing or threating to cause financial harm to any person;
6. Enticing or luring any person by fraud or deceit; or
7. Providing a controlled substance as outlined in Schedule I or Schedule II of Section 893.03 to any person for the purpose of exploitation of that person.

As a person authorized to sign on behalf of the **Company**, I certify that the **Company** does not use coercion for labor or services in accordance with Section 787.06.

Written Declaration

Under penalties of perjury, I declare that I have read the foregoing Affidavit and that the facts stated in it are true.

Printed Name: JOSEPH A. PEREZ

Title: PRESIDENT

Signature:

Date: 05/13/2025

Form **W-9**
(Rev. October 2018)
Department of the Treasury
Internal Revenue Service

Request for Taxpayer Identification Number and Certification

▶ **Go to *www.irs.gov/FormW9* for instructions and the latest information.**

Give Form to the requester. Do not send to the IRS.

Print or type. See **Specific Instructions** on page 3.

1 Name (as shown on your income tax return). Name is required on this line; do not leave this line blank.
Phoenix Concrete Plus, INC.

2 Business name/disregarded entity name, if different from above

3 Check appropriate box for federal tax classification of the person whose name is entered on line 1. Check only **one** of the following seven boxes.

☐ Individual/sole proprietor or single-member LLC ☑ C Corporation ☐ S Corporation ☐ Partnership ☐ Trust/estate

☐ Limited liability company. Enter the tax classification (C=C corporation, S=S corporation, P=Partnership) ▶ _____

Note: Check the appropriate box in the line above for the tax classification of the single-member owner. Do not check LLC if the LLC is classified as a single-member LLC that is disregarded from the owner unless the owner of the LLC is another LLC that is **not** disregarded from the owner for U.S. federal tax purposes. Otherwise, a single-member LLC that is disregarded from the owner should check the appropriate box for the tax classification of its owner.

☐ Other (see instructions) ▶

4 Exemptions (codes apply only to certain entities, not individuals; see instructions on page 3):

Exempt payee code (if any) _____

Exemption from FATCA reporting code (if any) _____

(Applies to accounts maintained outside the U.S.)

5 Address (number, street, and apt. or suite no.) See instructions.
8900 SW 117th ave suite B-205

Requester's name and address (optional)

6 City, state, and ZIP code
MIAMI, FL 33186

7 List account number(s) here (optional)

Part I Taxpayer Identification Number (TIN)

Enter your TIN in the appropriate box. The TIN provided must match the name given on line 1 to avoid backup withholding. For individuals, this is generally your social security number (SSN). However, for a resident alien, sole proprietor, or disregarded entity, see the instructions for Part I, later. For other entities, it is your employer identification number (EIN). If you do not have a number, see *How to get a TIN*, later.

Note: If the account is in more than one name, see the instructions for line 1. Also see *What Name and Number To Give the Requester* for guidelines on whose number to enter.

Social security number
			–			–				

or

Employer identification number
2	7	–	4	6	6	0	2	9	2

Part II Certification

Under penalties of perjury, I certify that:

1. The number shown on this form is my correct taxpayer identification number (or I am waiting for a number to be issued to me); and
2. I am not subject to backup withholding because: (a) I am exempt from backup withholding, or (b) I have not been notified by the Internal Revenue Service (IRS) that I am subject to backup withholding as a result of a failure to report all interest or dividends, or (c) the IRS has notified me that I am no longer subject to backup withholding; and
3. I am a U.S. citizen or other U.S. person (defined below); and
4. The FATCA code(s) entered on this form (if any) indicating that I am exempt from FATCA reporting is correct.

Certification instructions. You must cross out item 2 above if you have been notified by the IRS that you are currently subject to backup withholding because you have failed to report all interest and dividends on your tax return. For real estate transactions, item 2 does not apply. For mortgage interest paid, acquisition or abandonment of secured property, cancellation of debt, contributions to an individual retirement arrangement (IRA), and generally, payments other than interest and dividends, you are not required to sign the certification, but you must provide your correct TIN. See the instructions for Part II, later.

Sign Here | **Signature of U.S. person ▶** J.P. | **Date ▶** 05/13/2025

General Instructions

Section references are to the Internal Revenue Code unless otherwise noted.

Future developments. For the latest information about developments related to Form W-9 and its instructions, such as legislation enacted after they were published, go to *www.irs.gov/FormW9.*

Purpose of Form

An individual or entity (Form W-9 requester) who is required to file an information return with the IRS must obtain your correct taxpayer identification number (TIN) which may be your social security number (SSN), individual taxpayer identification number (ITIN), adoption taxpayer identification number (ATIN), or employer identification number (EIN), to report on an information return the amount paid to you, or other amount reportable on an information return. Examples of information returns include, but are not limited to, the following.

- Form 1099-INT (interest earned or paid)
- Form 1099-DIV (dividends, including those from stocks or mutual funds)
- Form 1099-MISC (various types of income, prizes, awards, or gross proceeds)
- Form 1099-B (stock or mutual fund sales and certain other transactions by brokers)
- Form 1099-S (proceeds from real estate transactions)
- Form 1099-K (merchant card and third party network transactions)
- Form 1098 (home mortgage interest), 1098-E (student loan interest), 1098-T (tuition)
- Form 1099-C (canceled debt)
- Form 1099-A (acquisition or abandonment of secured property)

Use Form W-9 only if you are a U.S. person (including a resident alien), to provide your correct TIN.

If you do not return Form W-9 to the requester with a TIN, you might be subject to backup withholding. See What is backup withholding, *later.*

BID BOND

KNOW ALL MEN BY THESE PRESENTS, that we, Phoenix Concrete Plus, Inc (hereinafter called the Principal), and RLI Insurance Company (hereinafter called the Surety), a Corporation chartered and existing under the laws of the State of Illinois is authorized to do business in the State of Florida, and having an Agent resident therein, such Agent and Company acceptable to the Village of Palmetto Bay, are held and firmly bound unto the Village of Palmetto Bay (hereinafter called Village), in the sum of Five Percent of Bid Proposal Submitted Dollars ($----------5%----------), good and lawful money of the United States of America, to be paid upon demand of the said Village, to which payment well and truly to be made we bind ourselves, our heirs, executors, administrators,
successors and assigns, jointly and severally and firmly by these presents.

WHEREAS; the above bounded Principal contemplates submitting or has submitted a Bid to the Village for furnishing all necessary labor, materials, equipment, machinery, tools, apparatus, services, all insurances and taxes, including but not limited to, state workmen's compensation and unemployment compensation insurance and taxes incurred in the performance of the Contract, and means of transportation for construction of:

VILLAGE OF PALMETTO BAY (the "Village")
PBP and CRP – Replacement of Designated Areas of Asphalt Walking Trails

for said Village, and;
WHEREAS; the Principal desires to file this Bond in accordance with law, in lieu of a certified Bidder's check otherwise required to accompany this Bid in the amount of five percent (5%) of the Base Bid.

NOW THEREFORE, the conditions of this obligation are such that, if the Bid be accepted, the Principal shall within ten (10) days after receipt of notification of the acceptance thereof, execute the Contract in accordance with the Invitation to Bid and Contact Documents and upon the terms, conditions and price set forth therein, in the form and manner required by the Village and execute sufficient and satisfactory Performance and Payment Bonds payable to the Village of Palmetto Bay, each in an amount of one hundred percent (100%) of the total Contract Price, as indicated in the Bid, in form and with security as set forth in the Invitation to Bid and Contract Documents satisfactory to the Village, then this obligation to be void, otherwise to be and remain in full force and virtue in law; and the Surety shall upon failure of the Principal to comply with any or all of the foregoing requirements within the time specified above immediately pay to the aforesaid Village upon demand the amount hereof in good and lawful money of the United States of America, not as a penalty but as liquidated damages.

IN WITNESS WHEREOF, THE said Phoenix Concrete Plus, Inc, as "Principal" herein has caused these presents to be signed in its name, by its _____ under its corporation seal, and the said RLI Insurance Company as "Surety" herein, has caused these presents to be signed in its name by its Attorney in Fact, under its corporate seal, this 16 day of May, 2025, and attested by its secretary, A.D., 2025.

ATTEST:

Joseph Diaz.
CEO
(Title)

Phoenix Concrete Plus, Inc

By:
(Principal)

ATTEST:

RLI Insurance Company

Claudia Diaz, secretary

By: _____
(Surety) Attorney-in-Fact & FL Res. Agent
Eduardo A. Menendez

RLI INSURANCE COMPANY CORPORATE SEAL ILLINOIS

(Attorneys-in-Fact who sign this bond must file with it a certified copy of their power-of-Attorney to sign said Bond).


SEAL
ILLINOIS

POWER OF ATTORNEY

RLI Insurance Company
Contractors Bonding and Insurance Company

9025 N. Lindbergh Dr. Peoria, IL 61615
Phone: 800-645-2402

Know All Men by These Presents:

That this Power of Attorney is not valid or in effect unless attached to the bond which it authorizes executed, but may be detached by the approving officer if desired.

That **RLI Insurance Company** and/or **Contractors Bonding and Insurance Company**, each an Illinois corporation, (separately and together, the "Company") do hereby make, constitute and appoint:

Angela Curtis, Audria R. Ward, Barbara J. Benton, Barbara Marrero, Brett Rosenhaus, Charles D. Nielson, Charles David Henry, Charlies J. Nielson, Christian Collins, Connie L. Russell, Connie Russell, Dale A. Belis, Danny Gann, Danny Rubin, David R. Hoover, Davor I. Mimica, Diane Lynn Schlabig, Eduardo A. Menendez, Edward M. Clark, Edward T. Ward, Erika L Fischerkeller, Gris Acosta, Jarrett Merlucci, Jean Paul M. Ziccardi, John Hampton, Justin Vokus, Kevin Wojtowicz, Kim Watson, jointly or severally

in the City of Leesburg, State of Florida its true and lawful Agent(s) and Attorney(s) in Fact, with full power and authority hereby conferred, to sign, execute, acknowledge and deliver for and on its behalf as Surety, in general, any and all bonds and undertakings in an amount not to exceed **Twenty Five Million** Dollars (**$25,000,000.00**) for any single obligation.

The acknowledgment and execution of such bond by the said Attorney in Fact shall be as binding upon the Company as if such bond had been executed and acknowledged by the regularly elected officers of the Company.

RLI Insurance Company and/or **Contractors Bonding and Insurance Company**, as applicable, have each further certified that the following is a true and exact copy of a Resolution adopted by the Board of Directors of each such corporation, and is now in force, to-wit:

> "All bonds, policies, undertakings, Powers of Attorney or other obligations of the corporation shall be executed in the corporate name of the Company by the President, Secretary, any Assistant Secretary, Treasurer, or any Vice President, or by such other officers as the Board of Directors may authorize. The President, any Vice President, Secretary, any Assistant Secretary, or the Treasurer may appoint Attorneys in Fact or Agents who shall have authority to issue bonds, policies or undertakings in the name of the Company. The corporate seal is not necessary for the validity of any bonds, policies, undertakings, Powers of Attorney or other obligations of the corporation. The signature of any such officer and the corporate seal may be printed by facsimile."

IN WITNESS WHEREOF, the **RLI Insurance Company** and/or **Contractors Bonding and Insurance Company**, as applicable, have caused these presents to be executed by its respective Sr. Vice President with its corporate seal affixed this 7th day of November, 2024.

RLI Insurance Company
Contractors Bonding and Insurance Company

By: _____
Eric Raudins — Sr. Vice President

State of Illinois }
County of Peoria } SS

On this 7th day of November, 2024, before me, a Notary Public, personally appeared Eric Raudins, who being by me duly sworn, acknowledged that he signed the above Power of Attorney as the aforesaid officer of the **RLI Insurance Company** and/or **Contractors Bonding and Insurance Company** and acknowledged said instrument to be the voluntary act and deed of said corporation.

By: _____
Jill A. Scott — Notary Public

JILL A SCOTT
Notary Public
State of Ohio
My Comm. Expires
September 22, 2025

CERTIFICATE

I, the undersigned officer of **RLI Insurance Company** and/or **Contractors Bonding and Insurance Company**, do hereby certify that the attached Power of Attorney is in full force and effect and is irrevocable; and furthermore, that the Resolution of the Company as set forth in the Power of Attorney, is now in force. In testimony whereof, I have hereunto set my hand and the seal of the **RLI Insurance Company** and/or **Contractors Bonding and Insurance Company** this 16 day of May, 2025.

RLI Insurance Company
Contractors Bonding and Insurance Company

By: _____
Jeffrey D Fick — Corporate Secretary

09G6777020212

ADDENDUM NO. 1

Date: May 13th, 2025

To: All Interested Parties

From: Alessia Bencomo, Procurement Specialist
Village of Palmetto Bay
9705 E. Hibiscus Street
Palmetto Bay, Florida 33157

Re: Invitation to Bid No. 2025-12-010
PBP and CRP – Replacement of Designated Areas of Asphalt Walking Trails

This Addendum forms part of the Invitation to Bid (ITB) Package advertised on April 29th, 2025, and with a bid opening date of May 16th, 2025, with any amendments and/or additions noted below.

Question No. 1: Could you please provide the estimated square footage for each park mentioned in the bid above? For the Palmetto Bay Park, item B is a bit confusing, and I'm not sure how to decipher the correct square footage.

Response: *From the starting point indicated as Exhibit "B", measurements are identified as linear feet out along trail (from starting point). Each identifies an area showing cracks and/or lifted asphalt. Bidder is to estimate the square footage of work at each location to resolve the uneven issues per specifications and hopefully reliability for the next five (5) years.*

Question No. 2: Does the Village have site plans for this project?

Response: *No, please reference the exhibits included with the ITB.*

Question No. 3: Are the measurements listed in the ITB an accurate amount and where does each start/end?

Response: *The bidder should visit the site to determine the exact measurements indicated in the Exhibits. The measurements are listed as an estimate.*

Question No. 4: Can a truck fit through the project areas?

Response: *Yes.*

Question No. 5: What is making the sidewalks rise and crack? Will the bidder be responsible for removing the roots?

Response: *The roots beneath the sidewalks are causing them to rise and crack. The bidder will be responsible for the removal.*

Question No. 6: How many of the tree's roots can be removed? If it exceeds the cap removal amount, should the bidder elevate the area?

Response: *The tree's roots cannot exceed a twenty-five (25) percent removal. The Village will have their Arborist review the areas and decide what should be removed.*

Question No. 7: Will there be an overlap for the twenty-four (24) inches?

Response: *Please check with manufacturer of Biobarrier as larger sizes roll widths are available up to fifty-eight point five (58.5) inches. Refer to Biobarrier Installation Guide re overlapping of material: overlap three (3) inches or two (2) nodule widths with construction adhesive.*

Question No. 8: Will the bond need to be for five (5) years?

Response: *Please reference Section 3 "Terms and Conditions" page 14 of the ITB.*

Question No. 9: Under Palmetto Bay Park: B. there's a list of measurements, however, out in the field there seems to be parts of the trail that have significant cracks resulting from roots before the specified 72' unless it is to be read as the entire area from the beginning of the trail till the 72' mark. In addition, can you confirm the width of the trail at this specific location?

Response: *Regarding Exhibit "B" and starting point from 180th Street, there seems to be area prior to the 72' mark which may be considered in need of repair. Please revise to 48-76' from starting point rather than simply 72'. The 134' and 374' marks indicate damage. The contractor shall exercise his/her best judgment as to the number of linear feet to be redone; example: 132-138 at 134' mark (please note the 132-138' is merely an example with no claim to accuracy). Exhibit "B" should be under 200 linear feet of walkway for repair. If you determine a much greater number, also submit an alternative bid for consideration.*

Question No. 10: At the same location the trail doesn't seem wide enough to support a truck, so can the street adjacent to the trail be closed off? Additionally, the park is sealed in by bollards, will it be removed by the city?

Response: *The Village will remove entry point bollards along 94th Avenue/180th Street. Please indicate in your bid if street closure is included.*

Question No. 11: Is there a budget or estimate for this project?

Response: *At this time, the Village does not have a budget for this project.*

Question No. 12: What is the budge/estimate for this contract?

Response: *At this time, the Village does not have a budget/estimate for this project.*

Question No. 13: Can we request for a bid extension?

Response: *The Village will not be extending the bid.*

Question No. 14: Could you please provide a bid plan and/or SOV to accurately determine the quantities and prepare our pricing?

Response: *No 'bid plan' or 'Schedule of Values' are available. Please refer to the bid specifications.*

Question No. 15: Could you please confirm if we can assume an approximate total length of 150 feet for the asphalt trail as shown below?

> B. Beginning where the asphalt meets the 180th Street sidewalk at the park's southern entrance adjacent to private residence, going north to specific areas indicated as 'feet from start'.
>
> 72'
> 134'
> 374'
> 607-627'
> 1145-1159'
> 1229-1286'
> 1576-1610'
> 1622-1632'

Response: *The bidder should visit the site to determine the exact measurements indicated in the Exhibits. The measurements are listed as an estimate.*

Thank you,

A Bencomo

Alessia Bencomo
Procurement Specialist

ACKNOWLEDGEMENT OF ADDENDUM SOLICITATION

Amendment/Modification No: 1

Amendment of ITB No: 2025-12-010

Title: PBP and CRP – Replacement of Designated Areas of Asphalt Walking Trails

Name of Contractor Phoenix Concrete Plus

Date Addendum Received 2/2/2026

Total Pages of Addendum including Acknowledgement 4

Print Name Joseph Perez

Signature

All other terms and conditions stipulated in the original Village of Palmetto Bay Invitation to Bid shall remain in force. All addenda created will be incorporated into the final contract and must be acknowledged in all bids. This acknowledgement form must be included in the response and failure to sign and submit this form may result in rejection of your bid.

AGENDA ITEM NO. 12.F

Item Cover Page

REGULAR COUNCIL AGENDA ITEM REPORT

DATE:	March 2, 2026
SUBMITTED BY:	Alessia Bencomo, Procurement
ITEM TYPE:	Resolution
AGENDA SECTION:	CONSENT AGENDA
SUBJECT:	A RESOLUTION OF THE MAYOR AND VILLAGE COUNCIL OF THE VILLAGE OF PALMETTO BAY, FLORIDA, RELATED TO PROCUREMENT; APPROVING THE SELECTION OF HEADLEY CONSTRUCTION GROUP, INC. TO CONSTRUCT BIKE LANES IMPROVEMENTS ON SW 82ND, PURSUANT TO INVITATION TO BID (ITB) NO. 2026-11-002; AUTHORIZING THE VILLAGE MANAGER TO NEGOTIATE AND ENTER INTO A CONTRACT AND ISSUE A PURCHASE ORDER IN THE AMOUNT OF TWO HUNDRED NINETY-TWO THOUSAND NINE HUNDRED FIVE DOLLARS AND ZERO CENTS ($292,905.00); AND PROVIDING FOR AN EFFECTIVE DATE. *(Sponsored by Administration and Prepared by Procurement Specialist, Alessia Bencomo)*
SUGGESTED ACTION:	

ATTACHMENTS:

Reso Memo - SW 82 Bike Lanes.doc
Reso - SW 82 Bike Lanes.docx
Exhibit A - Recommendation.pdf
Exhibit B - Tabulation and Bid Sheets - ITB# 2026-11-002.pdf
Exhibit C - ITB# 2026-11-002 - SW 82 Bike Lanes.pdf
Exhibit D - Bid - Hartec.PDF

Exhibit E - Bid - HCD.pdf
Exhibit F - Bid - Headley.pdf
Exhibit G - Bid - Pabon.pdf
Exhibit H - Bid - V&G.PDF
Exhibit I - Bid - VEC.pdf

To: Honorable Mayor and Village Council

Date: February 9, 2026

From: Nick Marano, Village Manager

Re: SW 82nd Bike Lanes Improvements

A RESOLUTION OF THE MAYOR AND VILLAGE COUNCIL OF THE VILLAGE OF PALMETTO BAY, FLORIDA, RELATED TO PROCUREMENT; APPROVING THE SELECTION OF HEADLEY CONSTRUCTION GROUP, INC. TO CONSTRUCT BIKE LANES IMPROVEMENTS ON SW 82nd, PURSUANT TO INVITATION TO BID (ITB) NO. 2026-11-002; AUTHORIZING THE VILLAGE MANAGER TO NEGOTIATE AND ENTER INTO A CONTRACT AND ISSUE A PURCHASE ORDER IN THE AMOUNT OF TWO HUNDRED NINETY-TWO THOUSAND NINE HUNDRED FIVE DOLLARS AND ZERO CENTS ($292,905.00), AND PROVIDING FOR AN EFFECTIVE DATE. *(Sponsored by Administration and Prepared by Procurement Specialist, Alessia Bencomo)*

BACKGROUND AND ANALYSIS:

The Village is seeking a qualified Company provide improvements to SW 82nd Bike Lanes. The Village published an ITB# 2026-11-002 for the "82nd Bike Lanes Improvements" on January 20th, 2026, and received a total of six (6) bids. Headley Construction Group, Inc., was the lowest responsive, responsible Bidder.

FISCAL IMPACT:

Special Revenue Fund – CITT Transportation in the amount of $292,905.00.

Attachments:

A. Recommendation
B. Tabulation and Bid Sheets
C. ITB# 2026-11-002
D. Bid – Hartec Group, Inc.
E. Bid – Homestead Concrete Drainage, Inc.
F. Bid – Headley Construction Group, Inc.
G. Bid – Pabon Engineering, Inc.
H. Bid – V&G Construction Solutions, Corp.
I. Bid – V Engineering, Corp.

RESOLUTION NO. 2026-_____

A RESOLUTION OF THE MAYOR AND VILLAGE COUNCIL OF THE VILLAGE OF PALMETTO BAY, FLORIDA, RELATED TO PROCUREMENT; APPROVING THE SELECTION OF HEADLEY CONSTRUCTION GROUP, INC. TO CONSTRUCT BIKE LANES IMPROVEMENTS ON SW 82nd, PURSUANT TO INVITATION TO BID (ITB) NO. 2026-11-002; AUTHORIZING THE VILLAGE MANAGER TO NEGOTIATE AND ENTER INTO A CONTRACT AND ISSUE A PURCHASE ORDER IN THE AMOUNT OF TWO HUNDRED NINETY-TWO THOUSAND NINE HUNDRED FIVE DOLLARS AND ZERO CENTS ($292,905.00), AND PROVIDING FOR AN EFFECTIVE DATE. *(Sponsored by Administration and Prepared by Procurement Specialist, Alessia Bencomo)*

WHEREAS, the Village published an ITB# 2026-11-002 ("ITB") for the "SW 82nd Bike Lanes Improvements" on January 20th, 2026; and

WHEREAS, the Village received a total of six (6) bids on February 5th, 2026; and

WHEREAS, Headley Construction Group, Inc., was the lowest responsive, responsible Bidder; and

WHEREAS, the Village Council finds that adoption of this resolution is in the best interest of the Village and its residents.

NOW THEREFORE, BE IT RESOLVED BY THE MAYOR AND VILLAGE COUNCIL OF THE VILLAGE OF PALMETTO BAY, FLORIDA, AS FOLLOWS:

Section 1. The above recitals are incorporated as if set forth in full.

Section 2. The selection of Headley Construction Group, Inc. pursuant to ITB# 2026-11-001, entitled "SW 82nd Bike Lanes Improvements" ("Project") is hereby approved. The Village Manager and/or his designee and the Village Attorney are authorized to negotiate and execute an agreement with Headley Construction Group, Inc. substantially in the form attached to the ITB for completion of the Project.

Section 3. Notwithstanding the limitations imposed upon the Village Manager pursuant to the Village's Procurement/Purchasing Policies, the Village Manager is hereby authorized to expend budgeted funds for the Project.

Section 4. This Resolution shall take effect immediately upon passage.

PASSED and **ADOPTED** this 2nd day of March 2026.

Attest:

_____	_____
Missy Arocha	**Karyn Cunningham**
Village Clerk	**Mayor**

APPROVED AS TO FORM AND LEGAL SUFFICIENCY FOR THE SOLE USE AND BENEFIT OF THE VILLAGE:

_____
John J. Quick
Village Attorney

FINAL VOTE AT ADOPTION:

Council Member Patrick Fiore _____

Council Member Steve Cody _____

Council Member Marsha Matson _____

Vice-Mayor Mark Merwitzer _____

Mayor Karyn Cunningham _____

Village of Palmetto Bay
Procurement Division - Procurement Action
AWARD RECOMMENDATION

To: Nick Marano, Village Manager

From: Alessia Bencomo, Procurement Specialist

Date: 02/09/2026

ITB#: 2026-11-002	**Item/Service:** SW 82nd Bike Lanes Improvements

Attach please find the tabulation and bid proposals.

I. Procurement Comments:

There was a total of six (6) bids received, Hartec Group, Inc., Headley Construction Group, Inc., Homestead Concrete Drainage, Inc., Pabon Engineering, Inc., V&G Construction Solutions, Corp., and V Engineering, Corp.

II. Recommendation:

a. Which bid is being recommended? **Headley Construction Group, Inc.**

b. Does the response being recommended for award meet the specifications as per the request and as advertised?
Yes __X__ No ____

c. Is the recommendation the lowest bid received?
Yes __X__ No _____

(attach an additional sheet if further comment or explanation is required)

III. Procurement Action/Recommendation(s):

The Procurement Specialist would like to move forward on the recommendation and be able to include as an agenda item for selection and award on the next Regular Council meeting held March 2nd, 2026.

IV. Recommendation Approval:

Acceptance to Move Forward with Intent to Award

Signature/Date

2/11/26

Nick Marano, Village Manager

					Hartec Group, Inc.		Homestead Concrete Drainage, Inc.		Headley Construction Group, Inc.
Bid Item No.	**Description**	**Estimated Quantity**	**Unit of Measure**	**Price/Unit**		**Price/Unit**		**Price/Unit**	
Village Hall Municipal Center									
1	Mobilization	LS	1	$ 20,000.00	$ 20,000.00	$ 40,000.00	$ 40,000.00	$ 4,875.90	$ 4,875.90
2	Maintenance of Traffic	LS	1	$ 5,000.00	$ 5,000.00	$ 15,000.00	$ 15,000.00	$ 10,726.98	$ 10,726.98
3	Storm Water Pollution Prevention Plan	LS	1	$ 2,000.00	$ 2,000.00	$ 12,000.00	$ 12,000.00	$ 4,875.90	$ 4,875.90
4	Site Restoration and Tie-In Grading	LS	1	$ 10,000.00	$ 10,000.00	$ 8,000.00	$ 8,000.00	$ 9,751.80	$ 9,751.80
5	Asphalt, SP-9.5, 1.5" Average Depth	SY	2200	$ 30.00	$ 66,000.00	$ 20.00	$ 44,000.00	$ 21.94	$ 48,268.00
6	Stabilized Subgrade, 12" Thick	SY	2200	$ 20.00	$ 44,000.00	$ 18.00	$ 39,600.00	$ 19.50	$ 42,900.00
7	Limerock Base, 8" Thick	SY	2200	$ 27.00	$ 59,400.00	$ 18.00	$ 39,600.00	$ 24.38	$ 53,636.00
8	Remove Existing Concrete, Asphalt, and Pavers	SY	930	$ 15.00	$ 13,950.00	$ 45.00	$ 41,850.00	$ 26.33	$ 24,486.90
9	ADA Accessible Catch Basin Grate	EA	1	$ 3,000.00	$ 3,000.00	$ 2,500.00	$ 2,500.00	$ 3,510.65	$ 3,510.65
10	Utility Fixture, Valve Assembly, Adjust/Modify	LS	1	$ 2,000.00	$ 2,000.00	$ 5,000.00	$ 5,000.00	$ 2,925.54	$ 2,925.54
11	Mailbox Relocation	EA	1	$ 1,000.00	$ 1,000.00	$ 1,600.00	$ 1,600.00	$ 1,950.36	$ 1,950.36
12	Sign Relocation	EA	2	$ 500.00	$ 1,000.00	$ 850.00	$ 1,700.00	$ 487.59	$ 975.18
13	Sign and Post	EA	6	$ 1,200.00	$ 7,200.00	$ 350.00	$ 2,100.00	$ 609.49	$ 3,656.94
14	Concrete Sidewalk (6" thick max) (Sidewalk, Driveway, and Apron)	SY	190	$ 150.00	$ 28,500.00	$ 75.00	$ 14,250.00	$ 82.89	$ 15,749.10
15	Paver Driveway Restoration	LS	1	$ 5,000.00	$ 5,000.00	$ 3,500.00	$ 3,500.00	$ 6,094.87	$ 6,094.87
16	Pavement Marking	LS	1	$ 100,000.00	$ 100,000.00	$ 70,000.00	$ 70,000.00	$ 58,520.88	$ 58,520.88
					$ 368,050.00		$ 340,700.00		$ 292,905.00

					Pabon Engineering, Inc.		V&G Construction Solutions, Corp.		V Engineering, Corp.
Bid Item No.	**Description**	**Estimated Quantity**	**Unit of Measure**	**Price/Unit**		**Price/Unit**		**Price/Unit**	
Public Services Building									
1	Mobilization	LS	1	$ 64,000.00	$ 64,000.00	$ 14,542.71	$ 14,542.71	$ 29,800.00	$ 29,800.00
2	Maintenance of Traffic	LS	1	$ 58,000.00	$ 58,000.00	$ 5,000.00	$ 5,000.00	$ 15,000.00	$ 15,000.00
3	Storm Water Pollution Prevention Plan	LS	1	$ 7,510.00	$ 7,510.00	$ 25,906.11	$ 25,906.11	$ 2,000.00	$ 2,000.00
4	Site Restoration and Tie-In Grading	LS	1	$ 72,000.00	$ 72,000.00	$ 5,000.00	$ 5,000.00	$ 20,000.00	$ 20,000.00
5	Asphalt, SP-9.5, 1.5" Average Depth	SY	2200	$ 54.00	$ 118,800.00	$ 18.54	$ 40,788.00	$ 19.00	$ 41,800.00
6	Stabilized Subgrade, 12" Thick	SY	2200	$ 34.00	$ 74,800.00	$ 0.01	$ 22.00	$ 14.00	$ 30,800.00
7	Limerock Base, 8" Thick	SY	2200	$ 44.00	$ 96,800.00	$ 55.38	$ 121,836.00	$ 27.00	$ 59,400.00
8	Remove Existing Concrete, Asphalt, and Pavers	SY	930	$ 8.00	$ 7,440.00	$ 24.51	$ 22,794.30	$ 11.00	$ 10,230.00
9	ADA Accessible Catch Basin Grate	EA	1	$ 3,200.00	$ 3,200.00	$ 2,000.00	$ 2,000.00	$ 600.00	$ 600.00
10	Utility Fixture, Valve Assembly, Adjust/Modify	LS	1	$ 3,400.00	$ 3,400.00	$ 3,172.00	$ 3,172.00	$ 1,500.00	$ 1,500.00
11	Mailbox Relocation	EA	1	$ 500.00	$ 500.00	$ 1,000.00	$ 1,000.00	$ 250.00	$ 250.00
12	Sign Relocation	EA	2	$ 400.00	$ 800.00	$ 200.00	$ 400.00	$ 250.00	$ 500.00
13	Sign and Post	EA	6	$ 800.00	$ 4,800.00	$ 483.55	$ 2,901.30	$ 650.00	$ 3,900.00
14	Concrete Sidewalk (6" thick max) (Sidewalk, Driveway, and Apron)	SY	190	$ 125.00	$ 23,750.00	$ 72.18	$ 13,714.20	$ 85.00	$ 16,150.00
15	Paver Driveway Restoration	LS	1	$ 8,200.00	$ 8,200.00	$ 6,165.85	$ 6,165.85	$ 5,000.00	$ 5,000.00
16	Pavement Marking	LS	1	$ 96,000.00	$ 96,000.00	$ 37,072.00	$ 37,072.00	$ 62,000.00	$ 62,000.00
BID TOTAL					**$ 640,000.00**		**$ 302,314.47**		**$ 298,930.00**

*Bid Item No. 5 typo. Price/Unit should be $18.54 not $2.06.

4.1:
BID FORM

The following Bid Form is presented to assist the Village in evaluating the bid. This Bid Form reflects estimated quantities for the Total Bid as described above. After award, the Village reserves the right to modify estimated quantities subject to the unit price and eliminate line items if necessary. Payment shall be made for the items listed on the Bid Form on the basis of the Work actually performed and completed.

Item No.	Description	Unit	Quantity	Unit Price	Total
1	Mobilization	LS	1	$20,000	$ 20,000.00
2	Maintenance of Traffic	LS	1	$ 5000.00	$ 5,000.00
3	Storm Water Pollution Prevention Plan	LS	1	$ 2,000.00	$ 2,000.00
4	Site Restoration and Tie-In Grading	LS	1	$ 10,000.00	$ 10,000.00
5	Asphalt, SP-9.5, 1.5" Average Depth	SY	2200	$ 30.00	$ 66,000.00
6	Stabilized Subgrade, 12" Thick	SY	2200	$ 20.00	$ 44,000.00
7	Limerock Base, 8" Thick	SY	2200	$ 27.00	$ 59,000.00
8	Remove Existing Concrete, Asphalt, and Pavers	SY	930	$ 15.00	$ 13,950.00
9	ADA Accessible Catch Basin Grate	EA	1	$ 3000.00	$ 3000.00
10	Utility Fixture, Valve Assembly, Adjust/Modify	LS	1	$ 2000.00	$ 2000.00
11	Mailbox Relocation	EA	1	$ 1000.00	$ 1000.00
12	Sign Relocation	EA	2	$ 500.00	$ 1000.00
13	Sign and Post	EA	6	$ 1200.00	$ 7200.00
14	Concrete Sidewalk (6" thick max) (Sidewalk, Driveway, and Apron)	SY	190	$ 150.00	$ 28,800.00
15	Paver Driveway Restoration	LS	1	$ 5000.00	$ 5000.00
16	Pavement Marking	LS	1	$ 100,000.00	$ 100,000.00
				GRAND TOTAL	$ 360,950.00

Refer to pay item notes within contract plans for details of costs to be included within items.

The following Bid Item Notes apply to the bid items:

1. Bid Item 1 is a lump sum pay item for all mobilization costs and includes the construction of two (2) project signs that shall be displayed at approaches to the project area. The intent is that the sign will be freestanding. The sign shall display on both sides the project name, Village Logo, elected officials, and contact information. A detail of the sign is included in the plans. Shop drawings must be submitted for approval prior to ordering the project sign. Photos of the actual project sign must be submitted for approval prior to installation of the project signs.

   Mobilization will be paid at the following rates:
   a. 10% of contract completion - 25% of Mobilization.
   b. 25% of contract completion - 50% of Mobilization.
   c. 50% of contract completion - 100% of Mobilization.

2. Bid Item 2 is a lump sum pay item for a Maintenance of Traffic (MOT) and includes all pedestrian access maintenance. All crosswalks and sidewalks shall remain open and free of obstructions. Temporary painting for roadways and crosswalks shall be maintained throughout the project. Costs shall include the use of flagmen. Contractor to prepare and submit for review a MOT Plan per phase of construction. The MOT plan shall be prepared by an FDOT certified individual. No work shall begin until the MOT plan has been approved by the Village.
3. Bid Item 3 to include a complete stormwater pollution prevention plan (SWPPP). Notice of Intent fees and compliance with any SWPPP reporting. Include furnishing, installation, maintenance, and removal of items. This is a lump sum pay item to furnish, install, maintain, and remove floating turbidity barriers.
4. Bid Item 4 is a lump sum pay item for site restoration which includes the complete restoration of the roadway or driveways impacted by any construction activity adjacent to the roadway resurfacing project including but not limited to mobilization, clearing, and grubbing, striping removal, milling and resurfacing, asphalt, limerock, and base removal, limerock rework, asphalt overlay, utility adjustments, mailbox relocations, etc. Any swale areas impacted by the contractor outside of those indicated on the plans will be restored by the contractor at no additional cost to the Village. The pay item includes but is not limited to sod, landscaping, trees, excavation, new fill, limerock base preparation, grading, tamping, irrigation, driveway aprons (asphalt, pavers, stamped concrete, etc.), sidewalks, mailboxes, fences, pipes, curbs, etc. to an equal or better condition prior to construction. The contractor shall include the costs associated with a preconstruction video to confirm existing conditions. Any damage not confirmed by preconstruction video will be repaired at no additional cost to the Village.
5. Bid Item 5 includes the asphalt final overlay to the extents shown on the plans or lift of asphalt (minimum 1.5") to final grade. Pavement overlay to provide smooth and continuous grading through the entire asphalt overlay process to avoid areas of standing water. This item also includes the final lift of asphalt over all trench restoration.
6. Bid Item 6 and 7 include all costs associated with the stabilized subgrade and limerock base.
7. Bid Item 8 includes all costs associated with removal and disposal of existing concrete, asphalt, and pavers and includes saw cutting.
8. Bid Items 9 includes all costs associated with the installation of ADA accessible catch basin grates.
9. Bid Item 10 includes all costs associated with valve adjustments.
10. Bid Item 11 includes all costs associated with the relocation of existing mailboxes as needed.
11. Bid Item 12 includes all costs associated with the relocation of existing signs.
12. Bid Item 13 includes all costs associated with new signs and their installation.
13. Bid Item 14 includes all costs associated with installing concrete pavements to include concrete sidewalks, driveways, and aprons up to 6" thick.
14. Bid Item 15 includes all costs associated with the restoration of paver driveways. Contractor is responsible of replacing pavers in the case that pavers break.
15. Bid Item 16 is a lump sum pay item for pavement marking which includes all costs associated with, thermoplastic pavement markings, including temporary pavement markings prior to thermoplastic, and reflective pavement markers (RPMs).

Total Bid Amount..... $ 360,950.00

Total Bid Amount (in words): Three Hundred and sixty thousand nine Hundred fifty Dollars and zero cents

Signature of Official: _____

Name: Garrett Hardie

Title: Vice President

Company: Hartec Group Inc.

Date: 2/5/25

4.1:
BID FORM

The following Bid Form is presented to assist the Village in evaluating the bid. This Bid Form reflects estimated quantities for the Total Bid as described above. After award, the Village reserves the right to modify estimated quantities subject to the unit price and eliminate line items if necessary. Payment shall be made for the items listed on the Bid Form on the basis of the Work actually performed and completed.

Item No.	Description	Unit	Quantity	Unit Price	Total
1	Mobilization	LS	1	$ 40,000.00	$ 40,000.00
2	Maintenance of Traffic	LS	1	$ 15,000.00	$ 15,000.00
3	Storm Water Pollution Prevention Plan	LS	1	$ 12,000.00	$ 12,000.00
4	Site Restoration and Tie-In Grading	LS	1	$ 8,000.00	$ 8,000.00
5	Asphalt, SP-9.5, 1.5" Average Depth	SY	2200	$ 20.00	$ 44,000.00
6	Stabilized Subgrade, 12" Thick	SY	2200	$ 18.00	$ 39,600.00
7	Limerock Base, 8" Thick	SY	2200	$ 18.00	$ 39,600.00
8	Remove Existing Concrete, Asphalt, and Pavers	SY	930	$ 45.00	$ 41,850.00
9	ADA Accessible Catch Basin Grate	EA	1	$ 2,500.00	$ 2,500.00
10	Utility Fixture, Valve Assembly, Adjust/Modify	LS	1	$ 5,000.00	$ 5,000.00
11	Mailbox Relocation	EA	1	$ 1,600.00	$ 1,600.00
12	Sign Relocation	EA	2	$ 850.00	$ 1,700.00
13	Sign and Post	EA	6	$ 350.00	$ 2,100.00
14	Concrete Sidewalk (6" thick max) (Sidewalk, Driveway, and Apron)	SY	190	$ 75.00	$ 14,250.00
15	Paver Driveway Restoration	LS	1	$ 3,500.00	$ 3,500.00
16	Pavement Marking	LS	1	$ 70,000.00	$ 70,000.00
				GRAND TOTAL	$ 340,700.00

Refer to pay item notes within contract plans for details of costs to be included within items.

The following Bid Item Notes apply to the bid items:

1. Bid Item 1 is a lump sum pay item for all mobilization costs and includes the construction of two (2) project signs that shall be displayed at approaches to the project area. The intent is that the sign will be freestanding. The sign shall display on both sides the project name, Village Logo, elected officials, and contact information. A detail of the sign is included in the plans. Shop drawings must be submitted for approval prior to ordering the project sign. Photos of the actual project sign must be submitted for approval prior to installation of the project signs.

   Mobilization will be paid at the following rates:
   a. 10% of contract completion - 25% of Mobilization.
   b. 25% of contract completion - 50% of Mobilization.
   c. 50% of contract completion - 100% of Mobilization.

2. Bid Item 2 is a lump sum pay item for a Maintenance of Traffic (MOT) and includes all pedestrian access maintenance. All crosswalks and sidewalks shall remain open and free of obstructions. Temporary painting for roadways and crosswalks shall be maintained throughout the project. Costs shall include the use of flagmen. Contractor to prepare and submit for review a MOT Plan per phase of construction. The MOT plan shall be prepared by an FDOT certified individual. No work shall begin until the MOT plan has been approved by the Village.
3. Bid Item 3 to include a complete stormwater pollution prevention plan (SWPPP). Notice of Intent fees and compliance with any SWPPP reporting. Include furnishing, installation, maintenance, and removal of items. This is a lump sum pay item to furnish, install, maintain, and remove floating turbidity barriers.
4. Bid Item 4 is a lump sum pay item for site restoration which includes the complete restoration of the roadway or driveways impacted by any construction activity adjacent to the roadway resurfacing project including but not limited to mobilization, clearing, and grubbing, striping removal, milling and resurfacing, asphalt, limerock, and base removal, limerock rework, asphalt overlay, utility adjustments, mailbox relocations, etc. Any swale areas impacted by the contractor outside of those indicated on the plans will be restored by the contractor at no additional cost to the Village. The pay item includes but is not limited to sod, landscaping, trees, excavation, new fill, limerock base preparation, grading, tamping, irrigation, driveway aprons (asphalt, pavers, stamped concrete, etc.), sidewalks, mailboxes, fences, pipes, curbs, etc. to an equal or better condition prior to construction. The contractor shall include the costs associated with a preconstruction video to confirm existing conditions. Any damage not confirmed by preconstruction video will be repaired at no additional cost to the Village.
5. Bid Item 5 includes the asphalt final overlay to the extents shown on the plans or lift of asphalt (minimum 1.5") to final grade. Pavement overlay to provide smooth and continuous grading through the entire asphalt overlay process to avoid areas of standing water. This item also includes the final lift of asphalt over all trench restoration.
6. Bid Item 6 and 7 include all costs associated with the stabilized subgrade and limerock base.
7. Bid Item 8 includes all costs associated with removal and disposal of existing concrete, asphalt, and pavers and includes saw cutting.
8. Bid Items 9 includes all costs associated with the installation of ADA accessible catch basin grates.
9. Bid Item 10 includes all costs associated with valve adjustments.
10. Bid Item 11 includes all costs associated with the relocation of existing mailboxes as needed.
11. Bid Item 12 includes all costs associated with the relocation of existing signs.
12. Bid Item 13 includes all costs associated with new signs and their installation.
13. Bid Item 14 includes all costs associated with installing concrete pavements to include concrete sidewalks, driveways, and aprons up to 6" thick.
14. Bid Item 15 includes all costs associated with the restoration of paver driveways. Contractor is responsible of replacing pavers in the case that pavers break.
15. Bid Item 16 is a lump sum pay item for pavement marking which includes all costs associated with, thermoplastic pavement markings, including temporary pavement markings prior to thermoplastic, and reflective pavement markers (RPMs).

Total Bid Amount..... $ 340,700.00

Total Bid Amount (in words): Three Hundred Forty Thousand Seven Hundred Dollars

Signature of Official:

Name: Nelson Apolinario

Title: Vice President

Company: Homestead Concrete & Drainage, Inc

Date: 02/05/2026

4.1:
BID FORM

The following Bid Form is presented to assist the Village in evaluating the bid. This Bid Form reflects estimated quantities for the Total Bid as described above. After award, the Village reserves the right to modify estimated quantities subject to the unit price and eliminate line items if necessary. Payment shall be made for the items listed on the Bid Form on the basis of the Work actually performed and completed.

Item No.	Description	Unit	Quantity	Unit Price	Total
1	Mobilization	LS	1	$4,875.90	$ 4,875.90
2	Maintenance of Traffic	LS	1	$10,726.98	$ 10,726.98
3	Storm Water Pollution Prevention Plan	LS	1	$4,875.90	$ 4,875.90
4	Site Restoration and Tie-In Grading	LS	1	$9,751.80	$ 9,751.80
5	Asphalt, SP-9.5, 1.5" Average Depth	SY	2200	$ 21.94	$ 48,268.00
6	Stabilized Subgrade, 12" Thick	SY	2200	$ 19.50	$ 42,900.00
7	Limerock Base, 8" Thick	SY	2200	$ 24.38	$ 53,636.00
8	Remove Existing Concrete, Asphalt, and Pavers	SY	930	$ 26.33	$ 24,486.90
9	ADA Accessible Catch Basin Grate	EA	1	$3,510.65	$ 3,510.65
10	Utility Fixture, Valve Assembly, Adjust/Modify	LS	1	$2,925.54	$ 2,925.54
11	Mailbox Relocation	EA	1	$1,950.36	$ 1,950.36
12	Sign Relocation	EA	2	$ 487.59	$ 975.18
13	Sign and Post	EA	6	$609.49	$ 3,656.94
14	Concrete Sidewalk (6" thick max) (Sidewalk, Driveway, and Apron)	SY	190	$ 82.89	$ 15,749.10
15	Paver Driveway Restoration	LS	1	$6,094.87	$ 6,094.87
16	Pavement Marking	LS	1	$58,520.88	$ 58,520.88
				GRAND TOTAL	$ 292,905.00

Refer to pay item notes within contract plans for details of costs to be included within items.

The following Bid Item Notes apply to the bid items:

1. Bid Item 1 is a lump sum pay item for all mobilization costs and includes the construction of two (2) project signs that shall be displayed at approaches to the project area. The intent is that the sign will be freestanding. The sign shall display on both sides the project name, Village Logo, elected officials, and contact information. A detail of the sign is included in the plans. Shop drawings must be submitted for approval prior to ordering the project sign. Photos of the actual project sign must be submitted for approval prior to installation of the project signs.

   Mobilization will be paid at the following rates:
   a. 10% of contract completion - 25% of Mobilization.
   b. 25% of contract completion - 50% of Mobilization.
   c. 50% of contract completion - 100% of Mobilization.

2. Bid Item 2 is a lump sum pay item for a Maintenance of Traffic (MOT) and includes all pedestrian access maintenance. All crosswalks and sidewalks shall remain open and free of obstructions. Temporary painting for roadways and crosswalks shall be maintained throughout the project. Costs shall include the use of flagmen. Contractor to prepare and submit for review a MOT Plan per phase of construction. The MOT plan shall be prepared by an FDOT certified individual. No work shall begin until the MOT plan has been approved by the Village.
3. Bid Item 3 to include a complete stormwater pollution prevention plan (SWPPP). Notice of Intent fees and compliance with any SWPPP reporting. Include furnishing, installation, maintenance, and removal of items. This is a lump sum pay item to furnish, install, maintain, and remove floating turbidity barriers.
4. Bid Item 4 is a lump sum pay item for site restoration which includes the complete restoration of the roadway or driveways impacted by any construction activity adjacent to the roadway resurfacing project including but not limited to mobilization, clearing, and grubbing, striping removal, milling and resurfacing, asphalt, limerock, and base removal, limerock rework, asphalt overlay, utility adjustments, mailbox relocations, etc. Any swale areas impacted by the contractor outside of those indicated on the plans will be restored by the contractor at no additional cost to the Village. The pay item includes but is not limited to sod, landscaping, trees, excavation, new fill, limerock base preparation, grading, tamping, irrigation, driveway aprons (asphalt, pavers, stamped concrete, etc.), sidewalks, mailboxes, fences, pipes, curbs, etc. to an equal or better condition prior to construction. The contractor shall include the costs associated with a preconstruction video to confirm existing conditions. Any damage not confirmed by preconstruction video will be repaired at no additional cost to the Village.
5. Bid Item 5 includes the asphalt final overlay to the extents shown on the plans or lift of asphalt (minimum 1.5") to final grade. Pavement overlay to provide smooth and continuous grading through the entire asphalt overlay process to avoid areas of standing water. This item also includes the final lift of asphalt over all trench restoration.
6. Bid Item 6 and 7 include all costs associated with the stabilized subgrade and limerock base.
7. Bid Item 8 includes all costs associated with removal and disposal of existing concrete, asphalt, and pavers and includes saw cutting.
8. Bid Items 9 includes all costs associated with the installation of ADA accessible catch basin grates.
9. Bid Item 10 includes all costs associated with valve adjustments.
10. Bid Item 11 includes all costs associated with the relocation of existing mailboxes as needed.
11. Bid Item 12 includes all costs associated with the relocation of existing signs.
12. Bid Item 13 includes all costs associated with new signs and their installation.
13. Bid Item 14 includes all costs associated with installing concrete pavements to include concrete sidewalks, driveways, and aprons up to 6" thick.
14. Bid Item 15 includes all costs associated with the restoration of paver driveways. Contractor is responsible of replacing pavers in the case that pavers break.
15. Bid Item 16 is a lump sum pay item for pavement marking which includes all costs associated with, thermoplastic pavement markings, including temporary pavement markings prior to thermoplastic, and reflective pavement markers (RPMs).

Total Bid Amount..... $ 292,905.00

Total Bid Amount (in words): two hundred ninety two thousand nine hundred and five dollars with zero cents

Signature of Official: Chris Headley

Name: Christopher Headley

Title: VP

Company: Headley Construction Group Inc.

Date: 1/30/26

4.1:
BID FORM

The following Bid Form is presented to assist the Village in evaluating the bid. This Bid Form reflects estimated quantities for the Total Bid as described above. After award, the Village reserves the right to modify estimated quantities subject to the unit price and eliminate line items if necessary. Payment shall be made for the items listed on the Bid Form on the basis of the Work actually performed and completed.

Item No.	Description	Unit	Quantity	Unit Price	Total
1	Mobilization	LS	1	$64,000.00	$64,000.00
2	Maintenance of Traffic	LS	1	$58,000.00	$58,000.00
3	Storm Water Pollution Prevention Plan	LS	1	$7,510.00	$7,510.00
4	Site Restoration and Tie-In Grading	LS	1	$72,000.00	$72,000.00
5	Asphalt, SP-9.5, 1.5" Average Depth	SY	2200	$54.00	$118,800.00
6	Stabilized Subgrade, 12" Thick	SY	2200	$34.00	$74,800.00
7	Limerock Base, 8" Thick	SY	2200	$44.00	$96,800.00
8	Remove Existing Concrete, Asphalt, and Pavers	SY	930	$8.00	$7440.00
9	ADA Accessible Catch Basin Grate	EA	1	$3,200.00	$3,200.00
10	Utility Fixture, Valve Assembly, Adjust/Modify	LS	1	$3,400.00	$3,400.00
11	Mailbox Relocation	EA	1	$500.00	$500.00
12	Sign Relocation	EA	2	$400.00	$800.00
13	Sign and Post	EA	6	$800.00	$4,800.00
14	Concrete Sidewalk (6" thick max) (Sidewalk, Driveway, and Apron)	SY	190	$125.00	$23,750.00
15	Paver Driveway Restoration	LS	1	$8,200.00	$8,200.00
16	Pavement Marking	LS	1	$96,000.00	$96,000.00
				GRAND TOTAL	$640,000.00

Refer to pay item notes within contract plans for details of costs to be included within items.

The following Bid Item Notes apply to the bid items:

1. Bid Item 1 is a lump sum pay item for all mobilization costs and includes the construction of two (2) project signs that shall be displayed at approaches to the project area. The intent is that the sign will be freestanding. The sign shall display on both sides the project name, Village Logo, elected officials, and contact information. A detail of the sign is included in the plans. Shop drawings must be submitted for approval prior to ordering the project sign. Photos of the actual project sign must be submitted for approval prior to installation of the project signs.

   Mobilization will be paid at the following rates:
   a. 10% of contract completion - 25% of Mobilization.
   b. 25% of contract completion - 50% of Mobilization.
   c. 50% of contract completion - 100% of Mobilization.

2. Bid Item 2 is a lump sum pay item for a Maintenance of Traffic (MOT) and includes all pedestrian access maintenance. All crosswalks and sidewalks shall remain open and free of obstructions. Temporary painting for roadways and crosswalks shall be maintained throughout the project. Costs shall include the use of flagmen. Contractor to prepare and submit for review a MOT Plan per phase of construction. The MOT plan shall be prepared by an FDOT certified individual. No work shall begin until the MOT plan has been approved by the Village.
3. Bid Item 3 to include a complete stormwater pollution prevention plan (SWPPP). Notice of Intent fees and compliance with any SWPPP reporting. Include furnishing, installation, maintenance, and removal of items. This is a lump sum pay item to furnish, install, maintain, and remove floating turbidity barriers.
4. Bid Item 4 is a lump sum pay item for site restoration which includes the complete restoration of the roadway or driveways impacted by any construction activity adjacent to the roadway resurfacing project including but not limited to mobilization, clearing, and grubbing, striping removal, milling and resurfacing, asphalt, limerock, and base removal, limerock rework, asphalt overlay, utility adjustments, mailbox relocations, etc. Any swale areas impacted by the contractor outside of those indicated on the plans will be restored by the contractor at no additional cost to the Village. The pay item includes but is not limited to sod, landscaping, trees, excavation, new fill, limerock base preparation, grading, tamping, irrigation, driveway aprons (asphalt, pavers, stamped concrete, etc.), sidewalks, mailboxes, fences, pipes, curbs, etc. to an equal or better condition prior to construction. The contractor shall include the costs associated with a preconstruction video to confirm existing conditions. Any damage not confirmed by preconstruction video will be repaired at no additional cost to the Village.
5. Bid Item 5 includes the asphalt final overlay to the extents shown on the plans or lift of asphalt (minimum 1.5") to final grade. Pavement overlay to provide smooth and continuous grading through the entire asphalt overlay process to avoid areas of standing water. This item also includes the final lift of asphalt over all trench restoration.
6. Bid Item 6 and 7 include all costs associated with the stabilized subgrade and limerock base.
7. Bid Item 8 includes all costs associated with removal and disposal of existing concrete, asphalt, and pavers and includes saw cutting.
8. Bid Items 9 includes all costs associated with the installation of ADA accessible catch basin grates.
9. Bid Item 10 includes all costs associated with valve adjustments.
10. Bid Item 11 includes all costs associated with the relocation of existing mailboxes as needed.
11. Bid Item 12 includes all costs associated with the relocation of existing signs.
12. Bid Item 13 includes all costs associated with new signs and their installation.
13. Bid Item 14 includes all costs associated with installing concrete pavements to include concrete sidewalks, driveways, and aprons up to 6" thick.
14. Bid Item 15 includes all costs associated with the restoration of paver driveways. Contractor is responsible of replacing pavers in the case that pavers break.
15. Bid Item 16 is a lump sum pay item for pavement marking which includes all costs associated with, thermoplastic pavement markings, including temporary pavement markings prior to thermoplastic, and reflective pavement markers (RPMs).

Total Bid Amount..... $ 640,000.00

Total Bid Amount (in words): Six hundred forty thousand dollars and zero cents.

Signature of Official: _____

Name: Anibal Pabon

Title: President

Company: Pabon Engineering, Inc.

Date: 02/04/2026

4.1:
BID FORM

The following Bid Form is presented to assist the Village in evaluating the bid. This Bid Form reflects estimated quantities for the Total Bid as described above. After award, the Village reserves the right to modify estimated quantities subject to the unit price and eliminate line items if necessary. Payment shall be made for the items listed on the Bid Form on the basis of the Work actually performed and completed.

Item No.	Description	Unit	Quantity	Unit Price	Total
1	Mobilization	LS	1	$ 14,542.71	$ 14,542.71
2	Maintenance of Traffic	LS	1	$ 5,000.00	$ 5,000.00
3	Storm Water Pollution Prevention Plan	LS	1	$ 25,906.11	$ 25,906.11
4	Site Restoration and Tie-In Grading	LS	1	$ 5,000.00	$ 5,000.00
5	Asphalt, SP-9.5, 1.5" Average Depth	SY	2200	$ 2.06	$ 40,788.00
6	Stabilized Subgrade, 12" Thick	SY	2200	$ 0.01	$ 22.00
7	Limerock Base, 8" Thick	SY	2200	$ 55.38	$ 121,836.00
8	Remove Existing Concrete, Asphalt, and Pavers	SY	930	$ 24.51	$ 22,794.30
9	ADA Accessible Catch Basin Grate	EA	1	$ 2,000.00	$ 2,000.00
10	Utility Fixture, Valve Assembly, Adjust/Modify	LS	1	$ 3,172.00	$ 3,172.00
11	Mailbox Relocation	EA	1	$ 1,000.00	$ 1,000.00
12	Sign Relocation	EA	2	$ 200.00	$ 400.00
13	Sign and Post	EA	6	$ 483.55	$ 2,901.30
14	Concrete Sidewalk (6" thick max) (Sidewalk, Driveway, and Apron)	SY	190	$ 72.18	$ 13,714.20
15	Paver Driveway Restoration	LS	1	$ 6,165.85	$ 6,165.85
16	Pavement Marking	LS	1	$ 37,072.00	$ 37,072.00
				GRAND TOTAL	$ 302,314.47

Refer to pay item notes within contract plans for details of costs to be included within items.

The following Bid Item Notes apply to the bid items:

1. Bid Item 1 is a lump sum pay item for all mobilization costs and includes the construction of two (2) project signs that shall be displayed at approaches to the project area. The intent is that the sign will be freestanding. The sign shall display on both sides the project name, Village Logo, elected officials, and contact information. A detail of the sign is included in the plans. Shop drawings must be submitted for approval prior to ordering the project sign. Photos of the actual project sign must be submitted for approval prior to installation of the project signs.

   Mobilization will be paid at the following rates:
   a. 10% of contract completion - 25% of Mobilization.
   b. 25% of contract completion - 50% of Mobilization.
   c. 50% of contract completion - 100% of Mobilization.

2. Bid Item 2 is a lump sum pay item for a Maintenance of Traffic (MOT) and includes all pedestrian access maintenance. All crosswalks and sidewalks shall remain open and free of obstructions. Temporary painting for roadways and crosswalks shall be maintained throughout the project. Costs shall include the use of flagmen. Contractor to prepare and submit for review a MOT Plan per phase of construction. The MOT plan shall be prepared by an FDOT certified individual. No work shall begin until the MOT plan has been approved by the Village.
3. Bid Item 3 to include a complete stormwater pollution prevention plan (SWPPP). Notice of Intent fees and compliance with any SWPPP reporting. Include furnishing, installation, maintenance, and removal of items. This is a lump sum pay item to furnish, install, maintain, and remove floating turbidity barriers.
4. Bid Item 4 is a lump sum pay item for site restoration which includes the complete restoration of the roadway or driveways impacted by any construction activity adjacent to the roadway resurfacing project including but not limited to mobilization, clearing, and grubbing, striping removal, milling and resurfacing, asphalt, limerock, and base removal, limerock rework, asphalt overlay, utility adjustments, mailbox relocations, etc. Any swale areas impacted by the contractor outside of those indicated on the plans will be restored by the contractor at no additional cost to the Village. The pay item includes but is not limited to sod, landscaping, trees, excavation, new fill, limerock base preparation, grading, tamping, irrigation, driveway aprons (asphalt, pavers, stamped concrete, etc.), sidewalks, mailboxes, fences, pipes, curbs, etc. to an equal or better condition prior to construction. The contractor shall include the costs associated with a preconstruction video to confirm existing conditions. Any damage not confirmed by preconstruction video will be repaired at no additional cost to the Village.
5. Bid Item 5 includes the asphalt final overlay to the extents shown on the plans or lift of asphalt (minimum 1.5") to final grade. Pavement overlay to provide smooth and continuous grading through the entire asphalt overlay process to avoid areas of standing water. This item also includes the final lift of asphalt over all trench restoration.
6. Bid Item 6 and 7 include all costs associated with the stabilized subgrade and limerock base.
7. Bid Item 8 includes all costs associated with removal and disposal of existing concrete, asphalt, and pavers and includes saw cutting.
8. Bid Items 9 includes all costs associated with the installation of ADA accessible catch basin grates.
9. Bid Item 10 includes all costs associated with valve adjustments.
10. Bid Item 11 includes all costs associated with the relocation of existing mailboxes as needed.
11. Bid Item 12 includes all costs associated with the relocation of existing signs.
12. Bid Item 13 includes all costs associated with new signs and their installation.
13. Bid Item 14 includes all costs associated with installing concrete pavements to include concrete sidewalks, driveways, and aprons up to 6" thick.
14. Bid Item 15 includes all costs associated with the restoration of paver driveways. Contractor is responsible of replacing pavers in the case that pavers break.
15. Bid Item 16 is a lump sum pay item for pavement marking which includes all costs associated with, thermoplastic pavement markings, including temporary pavement markings prior to thermoplastic, and reflective pavement markers (RPMs).

Total Bid Amount..... $ 302,314.47

Total Bid Amount (in words): Three hundred and two thousand three hundred fourteen and forty seven cents

Signature of Official: _____

Name: Guillermo Villanueva

Title: Vice President

Company: V&G Construction Solutions, Corp.

Date: 2/2/2026

4.1:
BID FORM

The following Bid Form is presented to assist the Village in evaluating the bid. This Bid Form reflects estimated quantities for the Total Bid as described above. After award, the Village reserves the right to modify estimated quantities subject to the unit price and eliminate line items if necessary. Payment shall be made for the items listed on the Bid Form on the basis of the Work actually performed and completed.

Item No.	Description	Unit	Quantity	Unit Price	Total
1	Mobilization	LS	1	$ 29,800.00	$ 29,800.00
2	Maintenance of Traffic	LS	1	$ 15,000.00	$ 15,000.00
3	Storm Water Pollution Prevention Plan	LS	1	$ 2,000.00	$ 2,000.00
4	Site Restoration and Tie-In Grading	LS	1	$ 20,000.00	$ 20,000.00
5	Asphalt, SP-9.5, 1.5" Average Depth	SY	2200	$ 19.00	$ 41,800.00
6	Stabilized Subgrade, 12" Thick	SY	2200	$ 14.00	$ 30,800.00
7	Limerock Base, 8" Thick	SY	2200	$ 27.00	$ 59,400.00
8	Remove Existing Concrete, Asphalt, and Pavers	SY	930	$ 11.00	$ 10,230.00
9	ADA Accessible Catch Basin Grate	EA	1	$ 600.00	$ 600.00
10	Utility Fixture, Valve Assembly, Adjust/Modify	LS	1	$ 1,500.00	$ 1,500.00
11	Mailbox Relocation	EA	1	$ 250.00	$ 250.00
12	Sign Relocation	EA	2	$ 250.00	$ 500.00
13	Sign and Post	EA	6	$ 650.00	$ 3,900.00
14	Concrete Sidewalk (6" thick max) (Sidewalk, Driveway, and Apron)	SY	190	$ 85.00	$ 16,150.00
15	Paver Driveway Restoration	LS	1	$ 5,000.00	$ 5,000.00
16	Pavement Marking	LS	1	$ 62,000.00	$ 62,000.00
				GRAND TOTAL	$ 298,930.00

Refer to pay item notes within contract plans for details of costs to be included within items.

The following Bid Item Notes apply to the bid items:

1. Bid Item 1 is a lump sum pay item for all mobilization costs and includes the construction of two (2) project signs that shall be displayed at approaches to the project area. The intent is that the sign will be freestanding. The sign shall display on both sides the project name, Village Logo, elected officials, and contact information. A detail of the sign is included in the plans. Shop drawings must be submitted for approval prior to ordering the project sign. Photos of the actual project sign must be submitted for approval prior to installation of the project signs.

   Mobilization will be paid at the following rates:
   a. 10% of contract completion - 25% of Mobilization.
   b. 25% of contract completion - 50% of Mobilization.
   c. 50% of contract completion - 100% of Mobilization.

2. Bid Item 2 is a lump sum pay item for a Maintenance of Traffic (MOT) and includes all pedestrian access maintenance. All crosswalks and sidewalks shall remain open and free of obstructions. Temporary painting for roadways and crosswalks shall be maintained throughout the project. Costs shall include the use of flagmen. Contractor to prepare and submit for review a MOT Plan per phase of construction. The MOT plan shall be prepared by an FDOT certified individual. No work shall begin until the MOT plan has been approved by the Village.
3. Bid Item 3 to include a complete stormwater pollution prevention plan (SWPPP). Notice of Intent fees and compliance with any SWPPP reporting. Include furnishing, installation, maintenance, and removal of items. This is a lump sum pay item to furnish, install, maintain, and remove floating turbidity barriers.
4. Bid Item 4 is a lump sum pay item for site restoration which includes the complete restoration of the roadway or driveways impacted by any construction activity adjacent to the roadway resurfacing project including but not limited to mobilization, clearing, and grubbing, striping removal, milling and resurfacing, asphalt, limerock, and base removal, limerock rework, asphalt overlay, utility adjustments, mailbox relocations, etc. Any swale areas impacted by the contractor outside of those indicated on the plans will be restored by the contractor at no additional cost to the Village. The pay item includes but is not limited to sod, landscaping, trees, excavation, new fill, limerock base preparation, grading, tamping, irrigation, driveway aprons (asphalt, pavers, stamped concrete, etc.), sidewalks, mailboxes, fences, pipes, curbs, etc. to an equal or better condition prior to construction. The contractor shall include the costs associated with a preconstruction video to confirm existing conditions. Any damage not confirmed by preconstruction video will be repaired at no additional cost to the Village.
5. Bid Item 5 includes the asphalt final overlay to the extents shown on the plans or lift of asphalt (minimum 1.5") to final grade. Pavement overlay to provide smooth and continuous grading through the entire asphalt overlay process to avoid areas of standing water. This item also includes the final lift of asphalt over all trench restoration.
6. Bid Item 6 and 7 include all costs associated with the stabilized subgrade and limerock base.
7. Bid Item 8 includes all costs associated with removal and disposal of existing concrete, asphalt, and pavers and includes saw cutting.
8. Bid Items 9 includes all costs associated with the installation of ADA accessible catch basin grates.
9. Bid Item 10 includes all costs associated with valve adjustments.
10. Bid Item 11 includes all costs associated with the relocation of existing mailboxes as needed.
11. Bid Item 12 includes all costs associated with the relocation of existing signs.
12. Bid Item 13 includes all costs associated with new signs and their installation.
13. Bid Item 14 includes all costs associated with installing concrete pavements to include concrete sidewalks, driveways, and aprons up to 6" thick.
14. Bid Item 15 includes all costs associated with the restoration of paver driveways. Contractor is responsible of replacing pavers in the case that pavers break.
15. Bid Item 16 is a lump sum pay item for pavement marking which includes all costs associated with, thermoplastic pavement markings, including temporary pavement markings prior to thermoplastic, and reflective pavement markers (RPMs).

Total Bid Amount..... $ 298,930.00

Total Bid Amount (in words): Two Hundred Ninety Eight thousand Nine Hundred thirty Dollars and NO CENTS.

Signature of Official: _____

Name: Felix Valdes

Title: Secretary.

Company: V Engineering Corp.

Date: 2/5/2026

Invitation to Bid

Village of Palmetto Bay
9705 East Hibiscus Street
Palmetto Bay, Florida 33157

TITLE:

SW 82nd Bike Lanes Improvements

ITB NO.:

2026-11-002

DUE DATE:

Thursday, February 5th, 2026 on or before 11:00 a.m. EST (Municipal Building)

ISSUED: Tuesday, January 20th, 2026

CONTACT PERSON:

Procurement Specialist
Alessia Bencomo
Finance Department – Procurement Division
abencomo@palmettobay-fl.gov

TABLE OF CONTENTS

SECTION 1.0 ADVERTISEMENT 3

SECTION 2.0 INTRODUCTION 4

SECTION 3.0 TERMS AND CONDITIONS 5 - 13

SECTION 4.0 SCOPES OF SERVICES 14 – 16

SECTION 5.0 BID SUBMISSION REQUIREMENTS 17

SECTION 6.0 EVALUATION AND SELECTION CRITERIA 18

SECTION 7.0 SCHEDULES OF EVENTS 19 - 20

SECTION 8.0 REQUIRED BID SUBMITTAL FORMS 21 - 41

SECTION 9.0 OTHER FORMS 42 - 56

SECTION 10.0 EXHIBITS 57 - 76

AGREEMENT 77

Exhibit “A”: SW 82nd Bike Lanes Improvements Engineering Plans 78

Exhibit “B”: SW 82nd Bike Lanes Improvements Drainage Memorandum 78

SECTION 1.0: Advertisement

INVITATION TO BID (ITB)
SW 82nd Bike Lanes Improvements
No. 2026-11-002

The Village of Palmetto Bay is seeking bids from a qualified Company to provide improvements to SW 82nd Bike Lanes. The Village will **receive sealed bids no later than 11:00 a.m.** on or before **Thursday, February 5th, 2026** (late submittals, email submittals, and facsimile submissions will not be accepted) **by the Village Clerk at the Municipal Center located at 9705 East Hibiscus Street, Palmetto Bay, Florida 33157**. All bids received will be publicly opened and read aloud on said date and time before the Procurement Specialist.

To be considered, all interested Parties must request copies of the bid documents and submit one (1) original and a flash drive containing a copy of the entire original submission in one (1) sealed package clearly marked with the bid titled "**SW 82nd Bike Lanes Improvements ITB# 2026-11-002**". **THE PACKAGE MUST BE CLEARLY LABELED TO THE ATTENTION OF THE VILLAGE CLERK, INCLUDING THE PACKAGE TITLE**. A bid guaranty in the amount of five percent (5%) of the bid must accompany each bid in accordance with the Invitation to Bid (ITB). The respondent shall bear all costs associated with the preparation and submission of the response to the solicitation.

A non-mandatory pre-bid meeting is scheduled for **Tuesday, January 27th, 2026, at 11:00 a.m.** at the Village Municipal Center at 9705 E. Hibiscus Street, Palmetto Bay, FL 33157. The bid documents may be obtained on or after **Tuesday, January 20th, 2026**. The bid document can be obtained by visiting our website www.palmettobay-fl.gov and by clicking Bids & RFP's. If you cannot download the documents please contact Alessia Bencomo, Procurement Division, abencomo@palmettobay-fl.gov.

No bid shall be withdrawn after the opening of the bid without the consent of the Village for a period of sixty (60) days after the scheduled time of opening and reading bids. The Village reserves the right to reject any and all bids or parts thereof, to terminate the process at any time, rebid the Project, waive any informalities, technicalities or irregularities, to disregard all non-conforming, conditional or counter-bids, to award in whole or in part to one or more respondents, or take any other such actions that may be deemed in the best interest of the Village.

SECTION 2.0: Introduction

VILLAGE OF PALMETTO BAY ("Village")

SW 82nd Bike Lanes Improvements (the "Project")

Construct bike lanes improvements project for the Village of Palmetto Bay (Invitation to Bid# 2026-11-002). The Project area is generally located along SW 82nd between SW 160th Street and SW 152nd Street. The Project shall include but not be limited to mobilization, maintenance of traffic, storm water pollution prevention, clearing and grubbing, minor roadway widening, pavement milling and resurfacing, concrete, swale regrading, sodding, pavement markings (temporary paint and thermoplastic), and site restoration throughout the Project area. All labor, equipment, and materials necessary to construct the improvements described by these Drawings and Project Specifications will be provided by the Company. Construction of this Project will require close coordination with the Village's Engineer and Public Services Director.

The Village may use state funding for this Project. In the event the Village's funding for this Project from the State is not appropriated or significantly reduced, the Village may terminate the Contract with written notice to the Company.

All bids must be on a Guaranteed Maximum Price (GMP) basis per the Bid Form.

SECTION 3.0: Terms and Conditions for Receipt of Bids

3.01 Requirement to Meet All Provisions

Each Company submitting a bid shall meet the terms and conditions of the ITB specifications package to the satisfaction of the Village. By virtue of the bid submittal, the Bidder acknowledges and agrees with and accepts all provisions of the ITB specifications. Terms used in these Instructions to Bidders which are defined in the Standard General Conditions of the Construction Contract, NSPE-ACEC Document 1910-8, CSI 56465 (1996 Edition) have the meanings assigned to them in the General Conditions. The term "Successful Bidder" means the lowest, responsive, qualified, responsible Bidder to whom the Village, on the basis of Owner's evaluation as hereinafter provided, makes an award and whose bid the Village determines is in the best interests of the Village.

3.02 Errors and Omissions in ITB

Bidders are responsible for reviewing all portions of this ITB, including all terms of the ITB and requirements of the Village's Procurement Code. Complete sets of Bidding Documents shall be used in preparing Bids; neither the Village nor the Engineer assumes any responsibility for errors or omissions resulting from the Bidder's review of the Bidding Documents. Bidders are to promptly notify the Village's Procurement Specialist, in writing, if the Bidder discovers any ambiguity, discrepancy, omission, or error in the ITB or required forms. Any such notification should be directed in writing promptly after discovery, but in no event later than six (6) calendar days prior to the date for receipt of bids. Modifications and clarifications will be made by addenda as provided below.

Examination of Site

3.02.1 Before submitting a Bid, each Bidder must (a) examine the Contract Documents, Project Specifications and Drawings thoroughly to its full satisfaction and have undertaken the responsibility to determine, within the scope of Bidder's competence as a licensed General Contractor, that the Project Specifications and Drawings are fit and proper for the performance of the Work and to the best of Bidder's knowledge are: (i) free from material errors, omissions, and/or inconsistencies; and (ii) are in compliance with applicable laws, statutes, building codes, ordinances, rules and regulations; recognizing however, that a Bidder is not responsible for the design of the Project; (b) visit the site to become familiar with local conditions that may in any manner affect cost, progress or performance of the Work; (c) examine the Project Site to its full satisfaction, including any existing work or improvements in place, and have determined that the same are fit and proper to receive the Work in their present condition and a Bidder waives all claims that they are not in compliance with all data and information with respect to the Project as specified in the Drawings and Project Specifications and/or as provided by Owner and Engineer; (d) familiarize itself with federal, state and local laws, ordinances, rules, policies, and regulations that may in any manner affect cost, progress or performance of the Work; (e) study and carefully correlate Bidder's observations with the Contract Documents; and (f) at Bidder's own expense, make or obtain any additional examinations, investigations, explorations, tests and studies, and obtain any additional information and data which pertain to the physical conditions including but not limited to surface, sub-surface and underground facilities at or contiguous to the Project site or otherwise which may affect cost, progress, performance or furnishing of the Work and which Bidder deems necessary to determine for its Bid for performing and furnishing the

Work in accordance with the time, price and other terms and conditions of the Contract Documents.

3.02.2 Reference is made to the Supplementary Conditions for the identification of those reports of investigations and tests of subsurface and latent physical conditions at the site or otherwise affecting cost, progress or performance of the Work which have been relied upon by Engineer in preparing the Drawings and Specifications. The Village will make copies of such reports available to any Bidder requesting them. These reports are not guaranteed as to accuracy or completeness, nor are they part of the Contract Documents. Before submitting the Bid, each Bidder will, at its own expense, make such additional investigations and tests as the Bidder may deem necessary to determine his Bid for performance of the Work in accordance with the time, price and other terms and conditions of the Contract Documents.

3.02.3 On request, the Village will provide each Bidder access to the site to conduct such investigations and tests as each Bidder deems necessary for submission of its Bid.

3.02.4 The property upon which the Work is to be performed, includes rights-of-way for access thereto and other property designated for use by Contractor in performing the Work, are identified in the Supplementary Conditions, General Conditions Drawings.

3.02.5 The submission of a Bid will constitute a binding representation by the Bidder that he has complied with every requirement of the Contract Documents and that the Contract Documents are sufficient in scope and detail to indicate and convey understanding of all terms and conditions for performance of the Work.

3.03 Inquiries Regarding ITB

Inquiries regarding the ITB, including requests for clarification of the ITB, must be in writing. With respect to questions about the meaning or intent of the Project Specifications or Drawings, all questions shall be submitted in writing to the Village within seventy-two (72) hours after the receipt of the Project Specifications or Drawings. Failure to submit written questions regarding the Project Specifications or Drawings must be made within seventy-two (72) hours of receipt of the Project Specifications or Drawings shall constitute a waiver of all claims associated therewith.

All inquiries shall only be directed to:

Alessia Bencomo
Procurement Specialist
Finance Department
9705 E. Hibiscus Street
Palmetto Bay, FL 33157
Email: abencomo@palmettobay-fl.gov

Oral information is not binding, or the Bidder shall be deemed to have waived all claims regarding the Project. Only questions answered by written addenda will be binding, as set forth in 3.04 below, and may supersede terms in this solicitation. Replies will be issued by Addenda mailed or delivered to all Parties recorded by the Village as having received the bidding documents.

Inquiries must be received by Monday, February 2nd, 2026, no later than 3:00 p.m. The Addendum will be posted by Monday, February 2nd, 2026, no later than 5:00 p.m. on DemandStar.

3.04 Addenda to ITB

The Village may modify or clarify the ITB, prior to the submittal due date, by issuing written addenda. Addenda will be sent via email to the last known address of each Company having received a copy of the ITB for bidding purposes. The Village will make reasonable efforts to notify bidders in a timely manner of modifications to the ITB. Notwithstanding this provision, bidders shall be responsible for ensuring that its submittal reflects any and all addenda issued by the Village prior to the submittal due date regardless of when the bid is submitted. Each bidder should acknowledge receipt of any addenda by so indicating in their bid submission. Each bidder acknowledges receipt of any addenda and is responsible for the contents of the addenda and any changes made to the bid. Failure to acknowledge any addenda may cause the bid to be rejected.

3.05 Bid Withdrawal and Opening

A Bidder may withdraw its bid, without prejudice prior to the time specified for the bid opening, by submitting a written request to the Village Clerk for its withdrawal, in which event the proposal will be returned unopened. No bid can be withdrawn within the ninety (90) day period which occurs after the time is set for the bid closing. A bidder who withdraws its bid prior to the ninety (90) day period may still submit another bid if done in accordance within the proper time frame. If the bidder chooses to withdraw their bid after the bidder has been granted the award, there will be fees and costs owing to the Village that will be incurred as a violation of late withdrawal. Fees will include out of pocket costs that the Village incurred through the process of approval. All bids will be opened and declared publicly. A bidder and/or its representative are invited to be present at the opening of the bid.

3.06 Revision of Bids

At any time during the submittal evaluation process, the Village may require a bidder to provide written clarification of its submittal.

3.07 Reservations of Rights by the Village

The issuance of this ITB does not constitute an agreement by the Village that any award will be issued by the Village. The Village expressly reserves the right at any time to:

- Waive or correct any defect or informality in any response, bid, or bid procedure;
- Reject any or all submittals;
- Reissue an ITB;
- Prior to submission deadline for submittals, modify all or any portion of the selection procedures, including deadlines for accepting responses, services to be provided under this ITB, or the requirements for contents or format of the submittals;
- Bids received after the deadline will not be considered.
- Any late withdrawal from a bidder that was granted award but declined, the Village has the right to award to the second highest bidder.

3.08 No Waiver

No waiver by the Village of any provision of this ITB shall be implied from any failure by the Village to recognize or act on account of any failure by a bidder to observe any provision of this ITB.

3.09 Cone of Silence

Pursuant to Section 2-138 of the Village Code, all procurement solicitations once advertised and until a written award recommendation has been forwarded by the Village Manager to the Village Council, are under the "Cone of Silence." The Cone of Silence ordinance is available at https://www.municode.com/library/#!/fl/palmetto_bay/codes/code_of_ordinances?nodeId=COOR_CH2AD_ARTVOFEM_DIV2COINCOET_S2-138COSI. Any communication regarding this bid shall be made in accordance with the Cone of Silence, the entirety of which is incorporated as if fully set forth herein. Communication between a potential bidder and the Procurement Specialist regarding this bid is exempt from the Cone of Silence, provided that the communication is limited strictly to matters of process or procedure already contained in the solicitation document.

3.10 Submittal and/or Presentation Costs

The Village assumes no responsibility or liability for costs incurred by the bidder prior to the execution of a contract, including but not limited to costs incurred as a result of preparing a response to this ITB.

Bidders are expected to examine the specifications, delivery schedules, bid prices and extensions and all instructions and failure to do so will be at the bidders own risk.

3.11 Certification

The bidder must sign all the required forms included under Section 8.0:

1. Drug-Free Workplace Certification
2. Sub-contractor List
3. Governmental References
4. Acknowledgment, Warranty, and Acceptance
5. Non-Collusive Affidavit
6. Sworn Statement on Public Entity Crimes
7. Disability Nondiscrimination Statement
8. Business Entity Affidavit
9. Conformance with OSHA Standards
10. Anti-Kickback Affidavit
11. Statement of Past Contract Disqualifications
12. E-Verify Affidavit
13. Foreign Country of Concern Attestation
14. Affidavit Attesting to Noncoercive Conduct for Labor or Services

3.12 Public Records

Florida law provides that municipal records should be open for inspection by any person under Chapter 119, Florida Statutes, the Public Records law. All information and materials received by the

Village in connection with responses shall become property of the Village and shall be deemed to be public records subject to public inspection after the award is issued.

3.13 Retention of Responses

The Village reserves the right to retain all Responses submitted.

3.14 Insurance

1. Upon Village's notification of award, the bidder shall furnish to the Procurement Division, Certificates of Insurance that indicate that insurance coverage has been obtained which meets the requirements as outlined below; **and name the Village as an additional insured.**

- Comprehensive General Liability - $1,000,000 combined single limit for each occurrence for bodily injury and property damage – designating the Village as Additional Insured
- Workers Compensation - Statutory Limits
- Automobile Liability - $1,000,000 per occurrence for all claims arising out of bodily injuries or death and property damages.

All insurance policies must be issued by companies authorized to do business under the laws of the State of Florida. The companies must be rated no less than "B+" as to management and no less than "Class V" as to strength by the latest edition of Best's Insurance guide, published by A.M. Best Company, Oldwick, New Jersey, or its equivalent.

Certificates of Insurance must indicate that for any cancellation of coverage before the expiration date, the issuing insurance carrier will mail a thirty (30) day written advance notice to the certificate holder.

In addition, the Company hereby agrees not to modify the insurance coverage without thirty (30) day written advance notice to the Village subject to the Village's approval.

Compliance with the foregoing requirements shall not relieve the bidder of this liability and obligation under this section or under any other section in the Contract.

If the insurance certificate is received within the specified time frame but not in the manner prescribed, the bidder shall be notified of such deficiency and shall have an additional five (5) calendar days to submit a corrected certificate to the Village. If the bidder fails to submit the required insurance documents in the manner prescribed in the Contract within five (5) calendar days after Village notification to comply, the bidder shall be in default of the contractual terms and conditions and award of the Contract will be rescinded, unless such time frame for submission has been extended by the Village.

The bidder shall be responsible for assuring that the insurance certificates required in conjunction with this Section remain in force for the duration of the contractual period of the Contract, including any and all option years or extension periods that may be granted by the Village. If insurance certificates are scheduled to expire during the contractual period, the bidder shall be responsible for submitting new or renewed insurance certificates to the Village at a minimum of thirty (30) calendar

days in advance of such expiration. In the event that expired certificates are not replaced with new or renewed certificates which cover the contractual period, the Village shall suspend the Contract until such time as the new or renewed certificates are received by the Village in the manner prescribed herein; provided, however, that this suspended period does not exceed thirty (30) calendar days. Thereafter, the Village may, at its sole discretion, terminate this contract.

3.15 Accounting

Please note that failure to provide a detailed invoice could result in delay of payment and include termination of any Contract.

Invoices, unless otherwise indicated, must show purchase order number, and shall be submitted to the Village of Palmetto Bay, Public Services Department, 9495 SW 180th Street, Palmetto Bay, FL 33157.

3.16 Statement of Contract Disqualifications

Each bidder shall submit a statement regarding any past government disqualifications on the form provided in the ITB package.

3.17 Submittal of One Bid Only

No individual or business entity shall be allowed to make more than one bid, or to be interested in more than one bid.

3.18 Exceptions to Specifications

Exceptions to these specifications shall be listed and explained on a separate page titled “Exceptions to Specifications”. This page shall then be attached and submitted at the same time as the bid. Each exception must refer to the page number and paragraph to which it is relevant. The nature and reasoning of each exception, including what, if any, alternative is being offered, shall be explained in its entirety. The Village, at its sole and absolute discretion, may accept or reject any or all exceptions and alternatives. Where exceptions and alternatives are rejected, the Village shall require the bidder to comply with the particular term and/or condition of the bid to which the bidder took exception. Failure to comply may be cause for rejection of the bid.

3.19 Non-Appropriation of Funds

The Village reserves the right to terminate in whole or in part the Contract in the event that sufficient funds to complete the Contract are not appropriated by the Village.

3.20 Property of the Village

All discoveries and documents produced as a result of any service or project undertaken on behalf of the Village shall become the property of the Village.

3.21 Contract Time

The number of days within which, or the date by which, the Work is to be completed is included in the Contract. Time is of the essence regarding all terms and conditions in the Contract.

3.22 Liquidated Damages

The bidder and the Village recognize that time is of the essence of this Contract and that the Village will suffer financial loss and other damages if the Work is not substantially or finally complete within the time specified in the Contract. The bidder also recognize the expense and difficulties involved in a legal or arbitration proceeding. The bidder acknowledges and agrees that the actual damages which the Village will suffer in the event of delay in achieving Substantial Completion or Final Completion of the Work are difficult, if not impossible, to determine and that the liquidated damages described are a fair and reasonable estimate of the delay damages which the Village is expected to suffer in the event of such delay. Accordingly, as actual damages cannot be ascertained, the bidder and the Village agree that as liquidated damages for delay, but not as a penalty, the bidder shall pay the Village the amount of One Thousand and 00/100 Dollars ($1,000.00) for each day after the time specified in the Documents for Substantial Completion until the Work is substantially complete.

Liquidated damages shall be deducted from the bidder's applications for payment. However, if at the time of the bidder's final application for payment, the bidder is owed insufficient amounts to fully cover the deduction for liquidated damages, then the bidder shall pay the amount due within ten (l0) days of written demand by the Village.

3.23 Litigation

Bidders shall describe any prior or pending litigation or investigation, either civil or criminal, involving a governmental agency or which may affect the performance of the services to be rendered in which the bidder, any of its employees, or subcontractors has been involved in within the last three (3) years.

3.24 Subcontractors

If the bidder intends on Subcontracting out all or any portion of the of the Project, the name of the proposed Subcontracting companies must be clearly disclosed in the bid. Following the award of the contract, no additional sub-contracting will be allowed without the prior written consent of the Village.

In order that the Village may be assured that only qualified and competent Subcontractors will be employed on the Project, each Bidder shall submit with the Bid a list of the Subcontractors who will perform the work for each division of the Project Specifications as indicated on the "List of Subcontractors" form contained within the Bid Form. The Bidder shall have determined to its own complete satisfaction that a listed Subcontractor has been successfully engaged in its particular type of business for a reasonable length of time, has successfully completed installations comparable to that which is required by the Contract Documents and is qualified both technically and financially to perform that pertinent phase of the Work for which it is listed. Only one Subcontractor shall be listed for each division of the Work. The "List of Subcontractors" shall be accompanied by an experience statement with pertinent information as to similar projects and other evidence of qualification, with all applicable licenses, registration or certification numbers noted on the Bid Form opposite its name for each such Subcontractor, person, and organization. No change shall be made to the "List of Subcontractors" after submission of the Bid, unless agreed to in writing by the Village. The Village may make a determination regarding the responsibility and qualifications of each Subcontractor. To demonstrate qualifications to perform the Work, each Subcontractor must be

prepared to submit, within five (5) days of Village's request, written evidence of the types set forth in the Request for Letter of Interest, such as financial data, previous experience, licensing, certification, and evidence of authority to conduct business in the Village. If the Village after due investigation has reasonable objection to any proposed Subcontractor the Village before giving the Notice of Intent to Award, shall request the apparent successful bidder to submit an acceptable substitute without an increase in the Bid Price. If the apparent successful bidder declines to make any such substitution, the Contract shall not be awarded to such bidder and the Bid Guaranty of that bidder shall be forfeited. Any Subcontractor so listed and to whom the Village does not make written objection prior to the giving of the Notice of Intent to Award will be deemed acceptable. Failure to provide the "List of Subcontractors" shall result in the bid being deemed non-responsive.

If the Contract Price is on the basis of Cost-of-the-Work Plus a Fee or GMP, the eventual successful bidder, prior to the Notice of Intent to Award, shall identify in writing those portions of the Work that such bidder proposes to subcontract and after the Notice of Intent to Award may only subcontract other portions of the Work with the Villages written consent.

3.25 Indemnification

The bidder shall indemnify, defend and hold harmless the Village and its officers, employees, agents and instrumentalities from any and all liability, losses or damages, including attorneys' fees and costs of defense at both trial and appellate levels, in which the Village or its officers, employees, agents or instrumentalities may incur as a result of claims, demands, suits, causes of actions or proceedings of any kind or nature arising out of, relating to or resulting from the performance of this Contract by the bidder or its employees, agents, servants, partners, principals or subcontractors. The bidder shall pay all claims and losses in connection therewith and shall investigate and defend all claims, suits or actions of any kind or nature in the name of the Village, and shall pay all costs, judgments, and attorney's fees at both trial and appellate levels which may issue as a result of the bidder's negligence. The bidder expressly understands and agrees that any insurance required by this Contract or otherwise provided by the bidder shall in no way limit the responsibility to indemnify, hold harmless and defend the Village or its officers, employees, agents, and instrumentalities. One Percent (1%) of the Contract amount shall represent the consideration to be provided for this Indemnification. Nothing contained herein shall be deemed a waiver of Sovereign Immunity provided to the Village under Section 768.28, Florida Statutes.

3.26 Quality

All materials used for the manufacture or construction of any supplies, materials or equipment covered by this ITB shall be new and be the latest model, of the best quality, and of the highest-grade workmanship. The Proposer, in addition to any warranties provided by the manufacturer of the materials, shall provide warranties of **MERCHANTIBILITY AND FITNESS FOR A PARTICULAR PURPOSE.**

3.27 Protests, Appeals and Disputes

The procedures and requirements for bid protests, appeals and disputes are set forth in the Village Code, Sec. 2-175 (o) – (p), the provisions of which are hereby incorporated as if fully set forth herein, which may be found on www.municode.com:

https://www.municode.com/library/#!/fl/palmetto_bay/codes/code_of_ordinances?nodeId=COOR_CH2AD_ARTVIFI_DIV2PRCO_S2-175PRPR

3.28 Force Majeure

The performance of any act by the Parties may be delayed or suspended at any time while, but only so long as either Party is hindered in or prevented from performance by acts of God, the elements, war, rebellion, strikes, lockouts or any cause beyond the reasonable control of such Party, provided however, the Village shall have the right to provide substitute service from third parties or Village personnel and in such event the Village shall withhold payment due for such period of time. If the condition of force majeure exceeds a period of fourteen (14) days the Village may, at its option and discretion, cancel or renegotiate the Contract.

3.29 Work Delays

Should the work be obstructed or delayed required to be done by approved changes in the work or by any default, act, or omission of the Village, or by strikes, fire, earthquake, hurricane, or any other Act of God, or by the inability to obtain materials, equipment, or labor due to local, State or federal government restrictions, then the time of completion may, at the Village's sole option, be extended for such periods as may be agreed upon by the Parties. In the event that there is insufficient time to grant such extensions prior to the completion date of the Contract, the Village Manager may, at the time of acceptance of the work, waive liquidated damages that may have accrued for failure to complete on time, due to any of the above.

3.30 Bid Guaranty

The bid must be accompanied by a bid guaranty in the form of a certified check payable to the Village of Palmetto Bay or a Bid Bond (form attached) in the amount of not less than five percent (5%) of the total amount of the bid, issued by a properly licensed surety company. For contracts not exceeding fifty thousand dollars and zero cents ($50,000.00) a bid guaranty is not required.

The Bid Guaranty will be retained until the Parties have executed the Contract and furnished the required Contract Security, whereupon it will be returned; if the successful bidder fails to execute, deliver and furnish the required guaranty within fifteen (15) days of the Notice of Intent to Award, Village may annul the Notice of Intent to Award and the Bid Security of that Bidder shall be forfeited.

3.31 PERFORMANCE AND PAYMENT BONDS

Within ten (10) days of the award of contract, there shall be placed surety bonds, each in the amount of One Hundred percent (100%) of the contract price, and issued by a properly licensed surety company acceptable to the Village. All bonds must be issued by an agent of broker licensed in the State of Florida and authorized to do business under the laws of the State of Florida. The bonds should provide that the surety's liability will be co-extensive with the Contractor's liability, and should contain a provision that the surety waives notice of changes to the contract, including, but not limited to, changes in the times for performance. For contracts not exceeding fifty thousand dollars and zero cents ($50,000.00) a surety bond is not required.

a. A Performance and One-Year Warranty Bond covering the faithful performance of the contract and a one-year warranty on labor from the date of final acceptance of the work.
b. A Labor Payment Bond

SECTION 4.0: Scope of Services

4.01 Scope of Work

The undersigned, as Bidder, hereby declares that the only persons, company, or parties interested in the Bid or the Contract to be entered into, as principals, are named herein; and that this Bid is made without connection with any other person, company, or parties making a Bid; and that it is in all respects fair and in good faith without collusion or fraud.

The Bidder has carefully and to his full satisfaction examined any and all information the Bidder deems necessary to submit this bid, including but not limited to, the attached Instructions to Bidders, General Conditions, Supplementary Conditions, Technical Specifications, and Contract and Bonds, together with the accompanying Drawings, Project Specifications and has read all addenda issued prior to the opening of bids; that a full examination of the location of the proposed Work has been made and agrees to furnish, unless otherwise provided, all implements, machinery, equipment, transportation, tools, materials, supplies, labor, and other things necessary to the prosecution and completion of the Work generally described as follows:

Construct bike lanes improvements for the Village of Palmetto Bay (Invitation to Bid# 2026-11-002). The Project area is generally located along SW 82nd Avenue between SW 160th Street and SW 152nd Street. The Project shall include but not be limited to mobilization, maintenance of traffic, storm water pollution prevention, clearing and grubbing, pavement milling and resurfacing, concrete, swale regrading, sodding, pavement markings (temporary paint and thermoplastic), minor roadway widening, and site restoration throughout the Project area. All labor, equipment, and materials necessary to construct the improvements described by these Drawings and Project Specifications will be provided by the Company. Construction of this Project will require close coordination with the Village's Engineer and Public Services Director.

It is proposed that the Project shall be constructed for the Total Guaranteed Maximum Price based on the Contract Unit Prices in this Bid, all in accordance with the requirements and provisions of the Contract Documents. The Village at its sole discretion shall award this Contract based on the Guaranteed Maximum Price.

4.1:
BID FORM

The following Bid Form is presented to assist the Village in evaluating the bid. This Bid Form reflects estimated quantities for the Total Bid as described above. After award, the Village reserves the right to modify estimated quantities subject to the unit price and eliminate line items if necessary. Payment shall be made for the items listed on the Bid Form on the basis of the Work actually performed and completed.

Item No.	Description	Unit	Quantity	Unit Price	Total
1	Mobilization	LS	1	$	$
2	Maintenance of Traffic	LS	1	$	$
3	Storm Water Pollution Prevention Plan	LS	1	$	$
4	Site Restoration and Tie-In Grading	LS	1	$	$
5	Asphalt, SP-9.5, 1.5" Average Depth	SY	2200	$	$
6	Stabilized Subgrade, 12" Thick	SY	2200	$	$
7	Limerock Base, 8" Thick	SY	2200	$	$
8	Remove Existing Concrete, Asphalt, and Pavers	SY	930	$	$
9	ADA Accessible Catch Basin Grate	EA	1	$	$
10	Utility Fixture, Valve Assembly, Adjust/Modify	LS	1	$	$
11	Mailbox Relocation	EA	1	$	$
12	Sign Relocation	EA	2	$	$
13	Sign and Post	EA	6	$	$
14	Concrete Sidewalk (6" thick max) (Sidewalk, Driveway, and Apron)	SY	190	$	$
15	Paver Driveway Restoration	LS	1	$	$
16	Pavement Marking	LS	1	$	$
				GRAND TOTAL	**$**

Refer to pay item notes within contract plans for details of costs to be included within items.

The following Bid Item Notes apply to the bid items:

1. Bid Item 1 is a lump sum pay item for all mobilization costs and includes the construction of two (2) project signs that shall be displayed at approaches to the project area. The intent is that the sign will be freestanding. The sign shall display on both sides the project name, Village Logo, elected officials, and contact information. A detail of the sign is included in the plans. Shop drawings must be submitted for approval prior to ordering the project sign. Photos of the actual project sign must be submitted for approval prior to installation of the project signs.

   Mobilization will be paid at the following rates:
   a. 10% of contract completion - 25% of Mobilization.
   b. 25% of contract completion - 50% of Mobilization.
   c. 50% of contract completion - 100% of Mobilization.

2. Bid Item 2 is a lump sum pay item for a Maintenance of Traffic (MOT) and includes all pedestrian access maintenance. All crosswalks and sidewalks shall remain open and free of obstructions. Temporary painting for roadways and crosswalks shall be maintained throughout the project. Costs shall include the use of flagmen. Contractor to prepare and submit for review a MOT Plan per phase of construction. The MOT plan shall be prepared by an FDOT certified individual. No work shall begin until the MOT plan has been approved by the Village.
3. Bid Item 3 to include a complete stormwater pollution prevention plan (SWPPP). Notice of Intent fees and compliance with any SWPPP reporting. Include furnishing, installation, maintenance, and removal of items. This is a lump sum pay item to furnish, install, maintain, and remove floating turbidity barriers.
4. Bid Item 4 is a lump sum pay item for site restoration which includes the complete restoration of the roadway or driveways impacted by any construction activity adjacent to the roadway resurfacing project including but not limited to mobilization, clearing, and grubbing, striping removal, milling and resurfacing, asphalt, limerock, and base removal, limerock rework, asphalt overlay, utility adjustments, mailbox relocations, etc. Any swale areas impacted by the contractor outside of those indicated on the plans will be restored by the contractor at no additional cost to the Village. The pay item includes but is not limited to sod, landscaping, trees, excavation, new fill, limerock base preparation, grading, tamping, irrigation, driveway aprons (asphalt, pavers, stamped concrete, etc.), sidewalks, mailboxes, fences, pipes, curbs, etc. to an equal or better condition prior to construction. The contractor shall include the costs associated with a preconstruction video to confirm existing conditions. Any damage not confirmed by preconstruction video will be repaired at no additional cost to the Village.
5. Bid Item 5 includes the asphalt final overlay to the extents shown on the plans or lift of asphalt (minimum 1.5") to final grade. Pavement overlay to provide smooth and continuous grading through the entire asphalt overlay process to avoid areas of standing water. This item also includes the final lift of asphalt over all trench restoration.
6. Bid Item 6 and 7 include all costs associated with the stabilized subgrade and limerock base.
7. Bid Item 8 includes all costs associated with removal and disposal of existing concrete, asphalt, and pavers and includes saw cutting.
8. Bid Items 9 includes all costs associated with the installation of ADA accessible catch basin grates.
9. Bid Item 10 includes all costs associated with valve adjustments.
10. Bid Item 11 includes all costs associated with the relocation of existing mailboxes as needed.
11. Bid Item 12 includes all costs associated with the relocation of existing signs.
12. Bid Item 13 includes all costs associated with new signs and their installation.
13. Bid Item 14 includes all costs associated with installing concrete pavements to include concrete sidewalks, driveways, and aprons up to 6" thick.
14. Bid Item 15 includes all costs associated with the restoration of paver driveways. Contractor is responsible of replacing pavers in the case that pavers break.
15. Bid Item 16 is a lump sum pay item for pavement marking which includes all costs associated with, thermoplastic pavement markings, including temporary pavement markings prior to thermoplastic, and reflective pavement markers (RPMs).

Total Bid Amount..... $_____
Total Bid Amount (in words): _____

_____
Signature of Official: _____
Name: _____
Title: _____
Company: _____
Date: _____

Section 5.0: Bid Submission Requirements

BID SUBMITTAL CHECKLIST

In order to be responsive, the bidder must submit the following items:

A. **One (1) sealed envelope which includes:** One (1) original and a flash drive of your submittal no later than 11:00 a.m. EST February 5th, 2026.

Please be sure that if the package is mailed through FedEx, UPS, USPS, etc., that the package is addressed/labeled to the below department and address. The bid inside the package should also be addressed/labeled to the below department and address.

Village of Palmetto Bay
Village Clerk's Office
9705 E. Hibiscus Street
Palmetto Bay, FL, 33157

B. **Signed and completed forms from *Section 8*:**

Introduction letter with contact information
Years in Business
Lead team Information
Bid Form
5% Bid Bond
Section 8 (Required Bid Submittal Forms)
Addendum Acknowledgement

C. **Bidders are required to acknowledge receipt of any formal Addendum by signing the Addendum and including it with the bid submission.** A Bidder's failure to include a signed formal Addendum in its bid submission may deem its bid non-responsive.

SECTION 6.0: Evaluation and Selection Criteria

Evaluation Criteria

EVALUATION OF BIDS/BIDDERS

The Village reserves the right to accept any bid, any part, or parts thereof, or to reject any and all bids. The Village reserves the right to waive minor informalities or irregularities in the bids received, to accept any bid deemed advantageous to the Village, or to reject any and all bids submitted. Conditional bids, or those which take exception to the ITB documents without prior written approval from the Village, may be considered non-responsive and may be rejected.

Award of the Contract is subject to Village Council approval. Other aspects of approval are experience, capability, necessary facilities, and financial resources to complete the Contract in a satisfactory manner within the required time.

The Village has the right during the evaluation to contact bidders for additional essential information to complete their examination.

SECTION 7.0: Schedule of Events

The anticipated schedule for selection of Company is shown below:

Bid Phase	Date	Location	Time (If Applicable)
ITB is advertised and issued by Village	Tuesday, January 20th, 2026	Posted on the Miami's Community Newspaper and Villages' Website	
Non-Mandatory Pre-Bid Meeting	Tuesday, January 27th, 2026	Village of Palmetto Bay Municipal Center 9705 E. Hibiscus St, Palmetto Bay, FL 33157	11:00 a.m.
Last day to Submit Questions	Monday, February 2nd, 2026	Via Email to abencomo@palmettobay-fl.gov	3:00 p.m.
Addendum Posting	Monday, February 2nd, 2026	Posted on DemandStar	5:00 p.m.
Bid Submission Date	Thursday, February 5th, 2026	Village of Palmetto Bay Municipal Center **ATTENTION TO THE VILLAGE CLERK** 9705 E. Hibiscus Street Palmetto Bay, Florida 33157	11:00 a.m.

7.01 Contract Award

A. Competency and Responsibility of Company
The Village reserves full discretion to determine the competence and financial status, of the bidder. The bidder will provide, in a timely manner, all information that the Village deems necessary to make such a decision.

B. Contract Requirement
The bidder to whom award is made shall execute a written Contract with the Village after notice of award. The Contract shall be made in the form adopted by the Village Attorney and a draft is included in this Request.

C. Insurance Requirements
The bidder shall provide proof of insurance in the form, coverages and amounts specified in 3.14 of these specifications within ten (10) calendar days after notice of Contract award as a precondition to Contract execution.

D. Business License & Tax
The bidder must have a valid Florida issued business license and tax certificate before execution of the Contract.

E. Failure to Accept Contract

The following will occur if the bidder to whom the award is made fails to enter into the Contract: the award will be annulled; any bid security will be forfeited in accordance with the special terms and conditions if a bidder's bond or security is required; and an award may be made to the next highest ranked bidder with a responsible compensation is negotiated, who shall fulfill every stipulation as if it were the party to whom the first award was made.

F. Completion of Contract

The Contract term commences after the Contract has been fully executed and the completion date is determined after all the scope of the project and the Bid Form have been completed.

SECTION 8.0: Required Bid Submittal Forms

DRUG-FREE WORKPLACE CERTIFICATION

In order to have a drug-free workplace program, a business shall:

1) Publish a statement notifying employees that the unlawful manufacture, distribution, dispensing, possession, or use of a controlled substance is prohibited in the workplace and specifying the actions that will be taken against employees for violations of such prohibition.
2) Inform employees about the dangers of drug abuse in the workplace, the business' policy of maintaining a drug-free workplace, any available drug counseling, rehabilitation, and employee assistance programs, and the penalties that may be imposed upon employees for drug abuse violations.
3) Give each employee engaged in providing the commodities or contractual services that are under proposal a copy of the statement specified in Subsection (1).
4) In the statement specified in Subsection (1), notify the employees, that, as a condition of working of the commodities or contractual services that are under proposal, the employee will abide by the terms of the statement and will notify the employee of any conviction of, or plea of guilty or nolo contendere to, any violation of Chapter 893 or of any controlled substance law of the United States or any state, for a violation occurring in the workplace no later than five (5) days after such conviction.
5) Impose a sanction on, or require the satisfactory participation in a drug abuse assistance or rehabilitation program, if such is available in the employee's community, by any employee who is so convicted.
6) Make a good faith effort to continue to maintain a drug-free workplace through implementation of this section.

As the person authorized to sign the statement, I certify that this Company complies fully with the above requirements.

Signature of Official: _____

Name (typed): _____

Title: _____

Company: _____

Date: _____

SUBCONTRACTOR LIST

The Company shall list all proposed Subcontractors to be used on this project if they are awarded the Contract.

Classification of Work	Subcontractor Name	Address	Telephone and Fax

REFERENCES

Each bid must be accompanied by a list of at least ***three (3)*** references from current customers, preferably in the public sector, which shall include all the information requested below. **The Village should not be listed as one of the references provided.**

VILLAGE OF PALMETTO BAY - REFERENCE FORM

Solicitation Information: SW 82nd Bike Lanes Improvements
Invitation to Bid No. 2026-11-002

Name of Company: _____

To Whom it May Concern,
The above reference vendor is submitting on a proposal solicitation or use of bid that has been issued by the Village of Palmetto Bay. We require that the consultant provide written references with their proposal submission and by providing you with this document the vendor is requesting that you provide the following reference information. We would appreciate you providing the information requested below as well as any other information you feel is pertinent:

Contracted Services Information:

Scope of Work: _____

_____

_____

Initial Value of Contract: _____ Final Value of Contract: _____

Length of Contract: _____

Would you enter into a contract with the Company in the future? _____Yes _____ No

Were the services provided acceptable and of quality standards: _____Yes _____ No

Was the Company responsive to your requests and resourceful with the task? _____Yes _____ No

Did the Company keep you fully informed of any updates and/or concerns related to the contracted services?

_____ Yes _____ No

If you responded no to any of the above please provide details:

_____

_____

_____

Comments:

_____

_____

_____

_____

Name of Public Entity/Company: _____

Name of Individual completing this form: _____

Signature: _____ Title: _____

Telephone: _____ Email: _____

Thank you for your support in helping us evaluate our solicitation responses.

Sincerely,
Alessia Bencomo, Procurement Specialist

ACKNOWLEDGEMENT, WARRANTY AND ACCEPTANCE

A. Company warrants that it is willing and able to comply with all applicable Village laws, rules and regulations.

B. Company warrants that they have read, understand and are willing to comply with all of the requirements of the ITB and the addendum/ addenda nos.

C. Company warrants that it will not delegate or sub-contract its responsibilities under an agreement without the prior written permission of the Council.

D. Company warrants that all information provided by it in connection with this bid is true and accurate.

E. CONTINGENCY FEE AND CODE OF ETHICS WARRANTY:

Company warrants that neither it, nor any principal, employee, agent, representative or family member has promised to pay, and Company has not, and will not, pay a fee for the amount of which is contingent upon the Village awarding this contract. Company warrants that neither it, nor any principal, employee, agent, representative has procured, or attempted to procure, this contract in violation of any of the provisions of the Village conflict of interest and code of ethics ordinances. Further, Company acknowledges that a violation of this warranty will result in the termination of the contract and forfeiture of funds paid, or to be paid, to the Company, if the Company is chosen for performance of the contract.

Signature of Official: _____

Name (typed): _____

Title: _____

Company: _____

Date: _____

.

NON-COLLUSIVE AFFIDAVIT

STATE OF FLORIDA }
} ss.:
COUNTY OF MIAMI-DADE }

_____ being first duly sworn, deposes and says that:

(1) He/she is the, (Owner, Partner, Officer, Representative or Agent) of: _____ _____, the Company that has submitted the attached Bid;

(2) He/she is fully informed respecting the preparation and contents of the attached Bid and of all pertinent circumstances respecting such Bid;

(3) Such Bid is genuine and is not a collusive or a sham Bid;

(4) Neither the said Company nor any of its officers, partners, owners, agents, representatives, employees or parties in interest, including this affiant, have in any way colluded, conspired, connived or agreed, directly or indirectly, with any other Company or person to submit a collusive or sham response in connection with the work for which the attached bid has been submitted, or to refrain from responding in connection with such work, or have in any manner, directly or indirectly, sought by agreement or collusion, communication, or conference with any Company or person to fix this Bid or to secure through any collusion, conspiracy, connivance, or unlawful agreement, any advantage against the Village of Palmetto Bay, or any person interested in the proposed Work;

Signed, sealed and delivered
In the presence of

Signature of Official: _____

Name (typed): _____

Title: _____

Company: _____

Date: _____

Continued Next Page

ACKNOWLEDGMENT

State of Florida)
) ss.:
County of _____)

The foregoing instrument was acknowledged before me **by means of _____ physical presence or _ online notarization**, this __ day of _____, 202__, by _____. He/She was _____ personally known, _____ or produced _____ as a form of identification.

WITNESS my hand and official seal

_____
NOTARY PUBLIC, STATE OF FLORIDA

SWORN STATEMENT PURSUANT TO SECTION 287.133 (3)(a) FLORIDA STATUES, ON PUBLIC ENTITY CRIMES

THIS FORM MUST BE SIGNED AND SWORN TO IN THE PRESENCE OF A NOTARY PUBLIC OR OTHER OFFICIAL AUTHORIZED TO ADMINISTER OATHS.

1. This sworn statement is submitted to the Village of Palmetto Bay, Florida

By _____

For _____

Whose business address is: _____

And (if applicable) its Federal Employer Identification Number (FEIN) is: _____

2. I understand that a "public entity crime" as defined In Paragraph 287.133(1)(g), Florida Statutes ,and as may be amended means a violation of any state or federal law by a person with respect to and directly related to the transaction of business with any public entity or with any agency or political subdivision of any other State or of the United States, including, but not limited to, any Proposal or contract for goods or services to be provided to any public entity or an agency or any political subdivision of any other state or of the United Sates and involving antitrust fraud, theft, bribery, collusion, racketeering, conspiracy, or material misrepresentation

3. I understand that "convicted" or "conviction"" as defined in Paragraph 287.133(1)(b), Florida Statutes means a finding of guilt or a conviction of a public entity crime, with or without an adjudication of guilt, in any federal or state trial court of record relating to charges brought by indictment or information after July 1, 1989, as a result or a jury verdict, non-jury trial, or entry of a plea or guilty or nab contenders.

4. I understand that an "affiliate" as defined in Paragraph 287.133(1)(a), Florida Statutes, and means:

A. A predecessor or successor of a person convicted of a public entity crime; or
B. An entity under the control of any natural person who is active in the management of the entity and who has been convicted of a public entity crime. The term "affiliate'" includes those officers, directors, executives, partners, shareholders, employees, members, and agents who are active in the management of an affiliate. The ownership by one person of shares constituting a controlling Interest in another person, ore pooling of equipment or income among persons when not for fair market value under an arm's length agreement, shall be a prima facie case that one person controls another person. A person who knowingly enters

into a joint venture with a person who has been convicted of a public entity crime in Florida during the preceding 36 months shall be considered an affiliate.

5. I understand that a "person" as defined in Paragraph 287.133(1)(e), Florida Statutes, means any natural person or entity organized under the laws or any state or of the United States with the legal power to enter into a binding contract and which Bids or applies to Bids on contracts for the provision of goods or services let by a public entity, or which otherwise transacts or applies to transact business with a public entity. The term "person" includes those officers, directors, executives, partners, shareholders, employees, members, and agents who are active in management of any entity.

Signed, sealed and delivered in the presence:

Signature of Official: _____

Name (typed): _____

Title: _____

Company: _____

Date: _____

ACKNOWLEDGMENT

State of Florida)
) ss.:
County of _____)

The foregoing instrument was acknowledged before me **by means of _____ physical presence or _ online notarization**, this __ day of _____, 202__, by _____. He/She was _____ personally known, _____ or produced _____ as a form of identification.

WITNESS my hand and official seal

_____
NOTARY PUBLIC, STATE OF FLORIDA

AMERICANS WITH DISABILITIES ACT (ADA)
DISABILITY NONDISCRIMINATION STATEMENT

THIS FORM MUST BE SIGNED AND SWORN TO IN THE PRESENCE OF A NOTARY PUBLIC OR OTHER OFFICIAL AUTHORIZED TO ADMINISTER OATHS.

This sworn statement is submitted to the VILLAGE OF PALMETTO BAY, FLORIDA

by: _____

(print individual's name and title)

for: _____

(print name of entity submitting sworn statement)

whose business address is: _____

and (if applicable) its Federal Employer Identification Number (FEIN) is: _____

I, being duly first sworn state: That the above named Company, corporation or organization is in compliance with and agreed to continue to comply with, and assure that any sub-contractor, or third party contractor under this project complies with all applicable requirements of the laws listed below including, but not limited to, those provisions pertaining to employment, provision of programs and services, transportation, communications, access to facilities, renovations, and new construction.

The American with Disabilities Act of 1990 (ADA), Pub. L. 101-336, 104 Stat 327, 42 USC 1210112213 and 47 USC Sections 225 and 661 including Title I, Employment; Title II, Public Services; Title III, Public Accommodations and Services Operated by Private entities; Title IV, Telecommunications; and Title V, Miscellaneous Provisions, and as any may be amended.

The Florida Americans with Disabilities Accessibility Implementation Act of 1993, Section 553.501-553.513, Florida Statutes:
The Rehabilitation Act of 1973, 229 USC Section 794;
The Federal Transit Act, as amended 49 USC Section 1612;
The Fair Housing Act as amended 42 USC Section 3601-3631.

Signature of Official: _____

Name (typed): _____

Title: _____

Company: _____

Date: _____

Continued Next Page

ACKNOWLEDGMENT

State of Florida)
) ss.:
County of _____)

The foregoing instrument was acknowledged before me **by means of _____ physical presence or _ online notarization**, this __ day of _____, 202__, by _____. He/She was _____ personally known, _____ or produced _____ as a form of identification.

WITNESS my hand and official seal

_____
NOTARY PUBLIC, STATE OF FLORIDA

BUSINESS ENTITY AFFIDAVIT

Bidder or Company hereby recognizes and certifies that no elected official, or employee of the Village of Palmetto Bay (the "Village") shall have a financial interest directly or indirectly in this transaction or any compensation to be paid under or through this transaction, and further, that no Village employee, nor any elected or appointed officer (including Village board members) of the Village, nor any spouse, parent or child of such employee or elected or appointed officer of the Village, may be a partner, officer, director or proprietor of Bidder or Company, and further, that no such Village employee or elected or appointed officer, or the spouse, parent or child of any of them, alone or in combination, may have a material interest in the Company or Bidder. Material interest means direct or indirect ownership of more than five percent (5%) of the total assets or capital stock of the Company or Bidder. Any exception to these above-described restrictions must be expressly provided by applicable law or ordinance and be confirmed in writing by Village. Further, Bidder or Company recognizes that with respect to this transaction or bid, if any Bidder or Company violates or is a party to a violation of the ethics ordinances or rules of the Village, the provisions of Miami-Dade County Code Section 2-11.1, as applicable to Village, Village Charter Section 7.6 (Lobbyist), or the provisions of Chapter 112, part III, Fla. Stat., the Code of Ethics for Public Officers and Employees and as may be amended, such Bidder or Company may be disqualified from furnishing the goods or services for which the bid or proposal is submitted and may be further disqualified from submitting any future bids or proposals for goods or services to Village.

Accordingly, Bidder or Company completes and executes the Business Entity Affidavit form below. The terms "Bidder" or "Company," as used herein, include any person or entity making a bid proposal herein to Village or providing goods or services to Village.

I, _____ being first duly sworn state:

The full legal name and business address of the person(s) or entity contracting or transacting business with the Village of Palmetto Bay ("Village") are (Post Office addresses are not acceptable), as follows:

_____

Federal Employer Identification Number (If none, Social Security Number)

_____

Name of Entity, Individual, Partners or Corporation

_____

Doing Business As (If same as above, leave blank)

_____

Street Address Suite Village State Zip Code

Continued Next Page

OWNERSHIP DISCLOSURE AFFIDAVIT

1. If the contact or business transaction is with a corporation, the full legal name and business address shall be provided for each officer and director and each stockholder who holds directly or indirectly five percent (5%) or more of the corporation's stock. If the contract or business transaction is with a trust, the full legal name and address shall be provided for each trustee and each beneficiary. All such names and addresses are (Post Office addresses are not acceptable), as follows:

   Full Legal Name Address Ownership

   _____ %

   _____ %

   _____ %

2. The full legal names and business address of any other individual (other than sub-contractors, material men, suppliers, laborers, or lenders) who have, or will have, any interest (legal, equitable, beneficial or otherwise) in the contract or business transaction with the Village are (Post Office addresses are not acceptable), as follows:

   _____

   _____

   _____

   _____

   _____

Signature of Official: _____

Name (typed): _____

Title: _____

Company: _____

Date: _____

Continued Next Page

ACKNOWLEDGMENT

State of Florida)
) ss.:
County of _____)

The foregoing instrument was acknowledged before me **by means of _____ physical presence or _ online notarization**, this __ day of _____, 202__, by _____. He/She was _____ personally known, _____ or produced _____ as a form of identification.

WITNESS my hand and official seal

_____
NOTARY PUBLIC, STATE OF FLORIDA

ACKNOWLEDGMENT OF CONFORMANCE WITH OSHA STANDARDS

To the Village of Palmetto Bay,

We _____ Bidder, Proposer, or Company, hereby acknowledge and agree that we, as the Prime Company for Village of Palmetto Bay, Village of Palmetto Bay _____, ITB# 2026-11-002, as specified, have the sole responsibility for compliance with all the requirements of the Federal Occupational Safety and Health Act of 1970 and as may be amended, and all State and local safety and health regulations, and agree to indemnify and hold harmless the Village of Palmetto Bay, against any and all liability, claims, damages losses and expenses they may incur due to the failure of : _____

_____

(Sub-Contractor's Names) to comply with such act or regulation.

Signature of Official: _____

Name (typed): _____

Title: _____

Company: _____

Date: _____

ACKNOWLEDGMENT

State of Florida)
) ss.:
County of _____)

The foregoing instrument was acknowledged before me **by means of _____ physical presence or _ online notarization**, this __ day of _____, 202__, by _____. He/She was _____ personally known, _____ or produced _____ as a form of identification.

WITNESS my hand and official seal

_____

NOTARY PUBLIC, STATE OF FLORIDA

VILLAGE OF PALMETTO BAY
ANTI-KICKBACK AFFIDAVIT

STATE OF FLORIDA)
) ss.:
COUNTY OF_____)

I, the undersigned, hereby duly sworn, depose and say that no portion of the sum herein bid will be paid to any employees of the Village of Palmetto Bay, its elected officials, and _____ _____ or its employees, as a commission, kickback, reward or gift, directly or indirectly by me or any member of my Company or by an officer of the corporation.

Signature of Official: _____

Name (typed): _____

Title: _____

Company: _____

Date: _____

ACKNOWLEDGMENT

State of Florida)
) ss.:
County of _____)

The foregoing instrument was acknowledged before me **by means of _____ physical presence or _ online notarization**, this __ day of _____, 202__, by _____. He/She was _____ personally known, _____ or produced _____ as a form of identification.

WITNESS my hand and official seal

_____
NOTARY PUBLIC, STATE OF FLORIDA

STATEMENT OF PAST CONTRACT DISQUALIFICATIONS

The Bidder, Proposer, or Company shall state whether it or any of its officers or employees who have a proprietary interest in it, has ever been disqualified, removed, or otherwise prevented from bidding on, or completing a federal, state, or local government project because of the violation of law, a safety regulation, or for any other reason, including but not limited to financial difficulties, project delays, or disputes regarding work or product quality, and if so to explain the circumstances.

Do you have any disqualification as described in the above paragraph to declare?

Yes or No, If yes, explain the circumstances.

_____
_____
_____
_____
_____

Executed on _____ at _____
under penalty of perjury of the laws of the State of Florida, that the foregoing is true and correct.

Signature of Official: _____

Name (typed): _____

Title: _____

Company: _____

Date: _____

E-VERIFY AFFIDAVIT

STATE OF _____

COUNTY OF _____

I,_____(the individual attesting below), being duly authorized byand on behalf of_____(hereinafter "Employer") after firstbeing duly sworn hereby swears or affirms as follows:

1. Employer understands that E-Verify is the federal E-Verify program operated by the United States Department of Homeland Security and other federal agencies, or any successor or equivalent programused to verify the work authorization of newly hired employees pursuant to federal law in accordancewith NCGS §64-25(5), and as the same may be amended.
2. Employer understands that Employers Must Use E-Verify. Each employer, after hiring an employee towork in the United States, shall verify the work authorization of the employee through E-Verify in accordance with NCGS §64-26(a), and as the same may be amended.
3. Employer's subcontractors will comply with E-Verify, and Employer will ensure compliance with E-Verifyby any and all subcontractors subsequently hired by Employer.

This_____day of_____, 20___.

_____
Signature of Affiant

Print or Type Name: _____

State of Florida)
) ss.:
County of _____)

The foregoing instrument was acknowledged before me **by means of _____ physical presence or _ online notarization**, this __ day of _____, 202__, by _____. He/She was _____ personally known, _____ or produced _____ as a form of identification.

Signed and sworn to (or affirmed) before me,

this the___day of_____, 20____.

My Commission Expires: _____

_____

Notary Public

NHCS – E-Verify 081815

Foreign Country of Concern Attestation

Capitalized terms used herein have the definitions ascribed in section 287.138, F.S.

Name of Company is not owned by the government of a Foreign Country of Concern, is not organized under the laws of nor has its principal place of business in a Foreign Country of Concern, and the government of a Foreign Country of Concern does not have a Controlling Interest (twenty five percent (25%) or more) in the Company.

Under penalties of perjury, I declare that I have read the forgoing statement and that the facts stated in it are true.

Printed Name: _____

Title: _____

Signature: _____ Date: _____

Affidavit Attesting to Noncoercive Conduct for Labor or Services

Nongovernment Entity name: _____("**Company**")

Vendor FEIN: _____

Address: _____

City: _____ State: _____ Zip: _____

Phone number: _____ Email Address: _____

As a nongovernmental entity executing, renewing, or extending a contract with a government entity, **Company** is required to provide an affidavit under penalty of perjury attesting that **Company** does not use coercion for labor or services in accordance with Section 787.06, Florida Statutes.

As defined in Section 787.06(2)(a), coercion means:

1. Using or threating to use physical force against any person;
2. Restraining, isolating, or confining or threating to restrain, isolate, or confine any person without lawful authority and against her or his will;
3. Using lending or other credit methods to establish a debt by any person when labor or services are pledged as a security for the debt, if the value of the labor or services as reasonably assessed is not applied toward the liquidation of the debt, the length and nature of the labor or service are not respectively limited and defined;
4. Destroying, concealing, removing, confiscating, withholding, or possessing any actual or purported passport, visa, or other immigration document, or any other actual or purported government identification document, of any person;
5. Causing or threating to cause financial harm to any person;
6. Enticing or luring any person by fraud or deceit; or
7. Providing a controlled substance as outlined in Schedule I or Schedule II of Section 893.03 to any person for the purpose of exploitation of that person.

As a person authorized to sign on behalf of the **Company**, I certify that the **Company** does not use coercion for labor or services in accordance with Section 787.06.

Written Declaration

Under penalties of perjury, I declare that I have read the foregoing Affidavit and that the facts stated in it are true.

Printed Name: _____

Title: _____

Signature: _____

Date: _____

Form **W-9**
(Rev. August 2013)
Department of the Treasury
Internal Revenue Service

Request for Taxpayer Identification Number and Certification

Give Form to the requester. Do not send to the IRS.

Print or type See **Specific Instructions** on page 2.

Name (as shown on your income tax return)

Business name/disregarded entity name, if different from above

Check appropriate box for federal tax classification:
☐ Individual/sole proprietor ☐ C Corporation ☐ S Corporation ☐ Partnership ☐ Trust/estate

☐ Limited liability company. Enter the tax classification (C=C corporation, S=S corporation, P=partnership) ▶ _____

☐ Other (see instructions) ▶

Exemptions (see instructions):
Exempt payee code (if any) _____
Exemption from FATCA reporting code (if any) _____

Address (number, street, and apt. or suite no.)

Requester's name and address (optional)

City, state, and ZIP code

List account number(s) here (optional)

Part I Taxpayer Identification Number (TIN)

Enter your TIN in the appropriate box. The TIN provided must match the name given on the "Name" line to avoid backup withholding. For individuals, this is your social security number (SSN). However, for a resident alien, sole proprietor, or disregarded entity, see the Part I instructions on page 3. For other entities, it is your employer identification number (EIN). If you do not have a number, see *How to get a TIN* on page 3.

Note. If the account is in more than one name, see the chart on page 4 for guidelines on whose number to enter.

Social security number
☐☐☐ – ☐☐ – ☐☐☐☐

Employer identification number
☐☐ – ☐☐☐☐☐☐☐

Part II Certification

Under penalties of perjury, I certify that:

1. The number shown on this form is my correct taxpayer identification number (or I am waiting for a number to be issued to me), and
2. I am not subject to backup withholding because: (a) I am exempt from backup withholding, or (b) I have not been notified by the Internal Revenue Service (IRS) that I am subject to backup withholding as a result of a failure to report all interest or dividends, or (c) the IRS has notified me that I am no longer subject to backup withholding, and
3. I am a U.S. citizen or other U.S. person (defined below), and
4. The FATCA code(s) entered on this form (if any) indicating that I am exempt from FATCA reporting is correct.

Certification instructions. You must cross out item 2 above if you have been notified by the IRS that you are currently subject to backup withholding because you have failed to report all interest and dividends on your tax return. For real estate transactions, item 2 does not apply. For mortgage interest paid, acquisition or abandonment of secured property, cancellation of debt, contributions to an individual retirement arrangement (IRA), and generally, payments other than interest and dividends, you are not required to sign the certification, but you must provide your correct TIN. See the instructions on page 3.

Sign Here **Signature of U.S. person** ▶ **Date** ▶

General Instructions

Section references are to the Internal Revenue Code unless otherwise noted.

Future developments. The IRS has created a page on IRS.gov for information about Form W-9, at *www.irs.gov/w9*. Information about any future developments affecting Form W-9 (such as legislation enacted after we release it) will be posted on that page.

Purpose of Form

A person who is required to file an information return with the IRS must obtain your correct taxpayer identification number (TIN) to report, for example, income paid to you, payments made to you in settlement of payment card and third party network transactions, real estate transactions, mortgage interest you paid, acquisition or abandonment of secured property, cancellation of debt, or contributions you made to an IRA.

Use Form W-9 only if you are a U.S. person (including a resident alien), to provide your correct TIN to the person requesting it (the requester) and, when applicable, to:

1. Certify that the TIN you are giving is correct (or you are waiting for a number to be issued),
2. Certify that you are not subject to backup withholding, or
3. Claim exemption from backup withholding if you are a U.S. exempt payee. If applicable, you are also certifying that as a U.S. person, your allocable share of any partnership income from a U.S. trade or business is not subject to the withholding tax on foreign partners' share of effectively connected income, and
4. Certify that FATCA code(s) entered on this form (if any) indicating that you are exempt from the FATCA reporting, is correct.

Note. If you are a U.S. person and a requester gives you a form other than Form W-9 to request your TIN, you must use the requester's form if it is substantially similar to this Form W-9.

Definition of a U.S. person. For federal tax purposes, you are considered a U.S. person if you are:

- An individual who is a U.S. citizen or U.S. resident alien,
- A partnership, corporation, company, or association created or organized in the United States or under the laws of the United States,
- An estate (other than a foreign estate), or
- A domestic trust (as defined in Regulations section 301.7701-7).

Special rules for partnerships. Partnerships that conduct a trade or business in the United States are generally required to pay a withholding tax under section 1446 on any foreign partners' share of effectively connected taxable income from such business. Further, in certain cases where a Form W-9 has not been received, the rules under section 1446 require a partnership to presume that a partner is a foreign person, and pay the section 1446 withholding tax. Therefore, if you are a U.S. person that is a partner in a partnership conducting a trade or business in the United States, provide Form W-9 to the partnership to establish your U.S. status and avoid section 1446 withholding on your share of partnership income.

SECTION 9.0: Other Forms

VILLAGE OF PALMETTO BAY
NOTICE OF INTENT TO AWARD

TO: _____
Company

_____
Address

ATT: _____
Name and Title

PROJECT DESCRIPTION: **SW 82nd Bike Lanes Improvements**
ITB No. 2026-11-002 in accordance with Contract Documents as prepared by the Village
_____:

This is to advise that the Village of Palmetto Bay intends to award the Contract for the above referenced Project as a result of your Bid of: _____ Dollars ($_____) submitted to the Village of Palmetto Bay (Owner) on _____ (Date).

Two (2) sets of the Contract Documents for this Project are attached. Each set contains an unexecuted Contact. Please execute all copies of the Contract and attach your insurance certificate (COI) as Palmetto Bay being the holder and return to our office within ten (10) consecutive days for final execution by the Owner.

Sincerely yours,

Alessia Bencomo
Procurement Specialist

Cc:

Attachment(s)

VILLAGE OF PALMETTO BAY
NOTICE TO PROCEED

TO: _____
Company

_____
Address

ATT: _____
Name and Title

PROJECT DESCRIPTION: **SW 82nd Bike Lanes Improvements**
ITB No. 2026-11-002 in accordance with Contract Documents as prepared by the Village

_____:

One executed copy of your Contract for the above Project has been forwarded to you through the Finance Department. The Commencement date is _____, 20___. Completion date shall be _____, 20__.

Your attention is invited to the provision whereby you shall start to perform your obligations under the Contract Documents on the Commencement date. Said date shall begin the Contract Time.

The Village of Palmetto Bay Manager's Office Director and/or his/her designee will be responsible for this project.

Sincerely yours,

Alessia Bencomo
Procurement Specialist

BID BOND

KNOW ALL MEN BY THESE PRESENTS, that we, _____ (hereinafter called the Principal), and _____ (hereinafter called the Surety), a Corporation chartered and existing under the laws of the State of _____ is authorized to do business in the State of Florida, and having an Agent resident therein, such Agent and Company acceptable to the Village of Palmetto Bay, are held and firmly bound unto the Village of Palmetto Bay (hereinafter called Village), in the sum of _____ Dollars ($_____), good and lawful money of the United States of America, to be paid upon demand of the said Village, to which payment well and truly to be made we bind ourselves, our heirs, executors, administrators, successors and assigns, jointly and severally and firmly by these presents.

WHEREAS; the above bounded Principal contemplates submitting or has submitted a Bid to the Village for furnishing all necessary labor, materials, equipment, machinery, tools, apparatus, services, all insurances and taxes, including but not limited to, state workmen's compensation and unemployment compensation insurance and taxes incurred in the performance of the Contract, and means of transportation for construction of:

VILLAGE OF PALMETTO BAY (the "Village")
SW 82nd Bike Lanes Improvements

for said Village, and;
WHEREAS; the Principal desires to file this Bond in accordance with law, in lieu of a certified Bidder's check otherwise required to accompany this Bid in the amount of five percent (5%) of the Base Bid.

NOW THEREFORE, the conditions of this obligation are such that, if the Bid be accepted, the Principal shall within ten (10) days after receipt of notification of the acceptance thereof, execute the Contract in accordance with the Invitation to Bid and Contact Documents and upon the terms, conditions and price set forth therein, in the form and manner required by the Village and execute sufficient and satisfactory Performance and Payment Bonds payable to the Village of Palmetto Bay, each in an amount of one hundred percent (100%) of the total Contract Price, as indicated in the Bid, in form and with security as set forth in the Invitation to Bid and Contract Documents satisfactory to the Village, then this obligation to be void, otherwise to be and remain in full force and virtue in law; and the Surety shall upon failure of the Principal to comply with any or all of the foregoing requirements within the time specified above immediately pay to the aforesaid Village upon demand the amount hereof in good and lawful money of the United States of America, not as a penalty but as liquidated damages.

IN WITNESS WHEREOF, THE said _____, as "Principal" herein has caused these presents to be signed in its name, by its _____ under its corporation seal, and the said _____ as "Surety" herein, has caused these presents to be signed in its name by its _____, under its corporate seal, this ____ day of _____, and attested by its _____, A.D., 20____.

ATTEST:

_____

_____ By: _____(Title)
(Principal)

ATTEST:

_____

_____ By: _____
(Surety) Attorney-in-Fact

(Attorneys-in-Fact who sign this bond must file with it a certified copy of their power-of-Attorney to sign said Bond).

PERFORMANCE BOND

PROJECT TITLE: **SW 82nd Bike Lanes Improvements (the "Project")**
CONTRACTOR:
CONTRACT NO: **2026-11-002**
CONTRACT DATED:

STATE OF §_____
§_____
COUNTY OF §_____

KNOW ALL MEN BY THESE PRESENTS: That by this Bond, we, _____ of the City of _____, County of _____, and State of _____, as Principal, and _____, authorized, licensed and admitted to do business under the laws of the State of Florida to act as Surety on bonds, as Surety, are held and firmly bound unto The Village of Palmetto Bay, as Obligee, in the penal sum of _____ Dollars ($_____) for the payment whereof, the said Principal and Surety bind themselves, and their heirs, administrators, executors, successors and assigns, jointly and severally, by these presents:

WHEREAS, the Principal has entered into a certain written Contract with _____ (Company), dated the _____ day of _____, 20___, for the construction of the **SW 82nd Bike Lanes Improvements** (the "Project"), which Contract is by reference made a part of this Bond.

NOW, THEREFORE, THE CONDITION OF THIS OBLIGATION, IS SUCH THAT, if the said Principal shall faithfully perform said Contract and shall in all respects fully and faithfully observe and perform all and singular the covenants, conditions, warranties and agreements in and by said Contract agreed and covenanted by the Principal to be observed and performed, and according to the true intent and meaning of said Contract, then this obligation shall be void; otherwise it shall remain in full force and effect.

Whenever Principal shall be declared by Obligee to be in default under the Contract, Obligee having performed Obligee's obligations thereunder, the Surety shall promptly remedy the default, or shall promptly:

(1) Complete the Contract in accordance with its terms and conditions; or

(2) Obtain a bid or bids for completion of the Contract in accordance with its terms and conditions and upon determination by Surety of the lowest responsive, responsible bidder, or, if Obligee elects, upon determination by Obligee and the Surety jointly of the lowest responsive, responsible bidder, arrange for a contract between such bidder and Surety for completion of the Contract in accordance with its terms and conditions, and make available as work progresses (even

though there should be a default or a succession of defaults under the contract or contracts of completion arranged under this paragraph) sufficient funds to pay the cost of completion less the balance of the Contract price; but not exceeding the amounts set forth in the first paragraph hereof.

The term "balance of the Contract price" as used in this Bond, shall mean the total amount payable by Obligee to Principal under the Contract and amendments thereto, less the amount paid by Obligee to Principal and less amounts withheld by Obligee pursuant to its rights under the Contract.

Surety, for value received, stipulates and agrees that no change, extension of time, alteration or addition to the terms of the Contract, or to the work performed thereunder, or the plans, specifications, or drawings accompanying the same, shall in any way affect its obligation on this Bond, and it does hereby waive notice of any such change, extension of time, alteration or addition to the terms of the Contract, or to the work to be performed thereunder and further agrees to all of the terms contained in the Contract.

No right of action shall accrue on this Bond to or for the use of any person or corporation other than the Obligee named herein or the heirs, successors, executors or administrators of the Obligee.

IN WITNESS WHEREOF, the said Principal and Surety have signed and sealed this instrument this _____ day of _____, 20___.

Witness:_____	Witness:_____
Principal	Surety
By:_____	By:_____
Name:_____ (Print)	Name:_____ (Print)
Title:_____	Title:_____
Address:_____	Address:_____
_____	_____

The name and address of the Resident Agent for service of process on Surety is:

Name:_____

Address:_____

Phone:_____

LABOR AND MATERIAL PAYMENT BOND

PROJECT TITLE: **SW 82nd Bike Lanes Improvements**
CONTRACTOR:
CONTRACT NO: **2026-11-002**
CONTRACT DATED:

STATE OF §_____
§_____
COUNTY OF §_____

KNOW ALL MEN BY THESE PRESENTS: That, by this Bond, we _____ _____, of the City of _____, County of _____, State of ____ _____, as Principal, and _____, a Company, authorized, licensed and admitted to do business under the laws of the State of Florida, as Surety, are held and firmly bound to the Village of Palmetto Bay, as Obligee, in the sum of $_____ for the payment of which Principal and Surety bind ourselves our heirs, personal representatives, successors, and assigns, jointly and severally.

THE CONDITION OF THE BOND is that if Principal:

1. Promptly makes payments to all lienors or other claimants supplying labor, material, or supplies used directly or indirectly by Principal in the prosecution of the work provided in the Contract between Principal and Obligee (the "Contract") for construction of the **SW 82nd Bike Lanes Improvements** the Contract being made a part of this Bond by reference; and

2. Pays Obligee all loss, damage, expenses, costs, and attorneys' fees, including appellate proceedings that Obligee sustains because of default by Principal under this Bond; then this Bond is void; otherwise, it remains in full force.

Any changes, extensions of time, alterations or additions in or under the Contract, Contract Documents, plans, specifications and/or drawings, or the work to be performed thereunder, and compliance or noncompliance with formalities connected with the Contract or with the changes do not affect Surety's obligations under this Bond, and Surety does hereby waive notice of any such changes, extensions of time, alterations or additions in or under the Contract, Contract Documents, plans, specifications and/or drawings, or the work to be performed thereunder.

This Bond is filed in accordance with Section 713.23, Florida Statutes, and/or Section 255.05, Florida Statutes, whichever or both as may be applicable.

DATED on _____, 20___.

IN WITNESS WHEREOF, the said Principal and Surety have signed and sealed this instrument this _____ day of _____, 20___.

Witness:_____ Witness:_____

Principal Surety

By:_____ By:_____

Name:_____ Name:_____
(Print) (Print)

Title:_____ Title:_____

Date:_____ Date:_____

Address:_____ Address:_____

The name and address of the Resident Agent for service of process Surety is:

Name:_____

Address:_____

Phone:_____

CONTRACTOR'S Affidavit and Partial Release

Owner: Village of Palmetto Bay
Project: **SW 82nd Bike Lanes Improvements**

Invitation to Bid#: 2026-11-002

Date: _____

STATE OF FLORIDA,
COUNTY OF DADE:

On this _____ day of _____, 20___, the undersigned affiant personally appeared before me and, after first being duly sworn, deposes and says:

1. The undersigned is the duly authorized representative of _____ doing business in the Village of Palmetto Bay, hereafter called Contractor.

2. The Contractor for and in consideration of payment to the Contractor in the amount of $ _____, and all other previous payments paid by Owner to Contractor, does hereby for and on behalf of _____ Contractor, waive, release, remise and relinquish the Contractor's right to claim, demand or impose a lien or liens for work done or materials and/or services furnished or any other class of lien whatsoever, on any of the premises or property owned by Owner through the above date.

3. The Contractor, by authorization and for the Contractor, further releases and forever discharges Owner, Engineer and the Project from any and all obligations arising out of the Contractor's Contract with the Owner, including all change orders thereto, either oral or written and any and all claims demands, and liens of any kind, nature and character whatsoever.

4. All persons, entities, Potential Lienors (subcontractor, sub-subcontractors suppliers, laborers and materialmen) and claimants who furnished material, labor and/or services for the Project have been paid for work completed through the above date.

5. This Affidavit and Partial Release is made by the Contractor with full knowledge of the applicable laws of the State of Florida. In addition to such rights as may be afforded to Owner under said applicable laws, the undersigned expressly agrees to indemnify and save Owner, Engineer, and the Project harmless from any and all actual costs and expenses, including reasonable attorney's fees, arising out of any claim by laborers, subcontractors, sub-subcontractors, materialmen, Potential Lienors or other claimants who might claim that they have not been paid for services or material furnished by or through the Contractor in connection with the Work performed under the Contract through the above date.

6. The Contractor further warrants that waivers of lien have been obtained from all Contractors, subcontractors, sub-subcontractors, suppliers, laborers and materialmen with respect to all work performed on the Project through the above date in such form as to constitute an effective waiver of lien under the applicable laws of the State of Florida.

_____(Seal)
Contractor

_____
Print Name

By:_____

_____
Print Name

State of Florida)
) ss.:
County of _____)

The foregoing instrument was acknowledged before me **by means of** _____ **physical presence or** _ **online notarization**, this __ day of _____, 202__, by _____. He/She was _____ personally known, _____ or produced _____ as a form of identification.

_____
Notary Public, State of Florida

My Commission Expires:

_____
Print Name of Notary Public

CONTRACTOR'S Affidavit and Final Release

Owner: Village of Palmetto Bay
Project: **SW 82nd Bike Lanes Improvements**

Invitation to Bid#: 2026-11-002

Date: _____

STATE OF FLORIDA,
COUNTY OF DADE:

On this _____ day of _____, 20___, the undersigned affiant personally appeared before me and, after first being duly sworn, deposes and says:

1. The undersigned is the duly authorized representative of _____ doing business in the Village of Palmetto Bay, hereafter called Contractor.

2. The Contractor for and in consideration of final payment to the Contractor in the amount of $_____, and all other previous payments paid by Owner to Contractor, does hereby for and on behalf of _____ Contractor, waive, release, remise and relinquish the Contractor's right to claim, demand or impose a lien or liens for Work done or materials and/or services furnished or any other class of lien whatsoever, on any of the premises or property owned by Owner.

3. The Contractor, by authorization and for the Contractor, further releases and forever discharges Owner, Engineer and the Project from any and all obligations arising out of the Contractor's Contract with the Owner for Work at the Project, including all change orders thereto, either oral or written, and any and all claims, demands, and liens of any kind, nature and character whatsoever.

4. All work performed under the Contract with Owner on the Project has been fully completed and that all persons, entities, Potential Lienors (subcontractors, sub-subcontractors, suppliers, laborers and materialmen) and other claimants who furnished material, labor and/or services for the Project have been paid in full.

5. This Affidavit and Final Release is made by the Contractor with full knowledge of the applicable laws of the State of Florida. In addition to such rights as may be afforded to Owner under said applicable laws, the Contractor expressly agrees to indemnify and save Owner, Engineer, and the Project harmless from any and all actual costs and expenses, including reasonable attorney's fees, arising out of any claim by laborers, subcontractors, sub-subcontractors, materialmen, Potential Lienors or other claimants who might claim that they have not been paid for services or material furnished by or through the Contractor in connection with the Work performed under the Contract at the Project.

6. The Contractor warrants that in connection with the Work performed on the Project, there are no outstanding contractors' liens affecting the Project, that all amounts due and payable with respect to the Work performed by the Contractor (including Social Security, Unemployment, Insurance, Sales, Use and any other taxes), Union dues, and fringe benefits to employees, if any, have been duly paid to date and/or are included in the application for final payment. The Contractor further warrants that waivers of lien have been obtained from all Contractors, subcontractors, sub-subcontractors, suppliers, laborers and materialmen with respect to all Work performed on the Project in such form as to constitute an effective waiver of lien under the applicable laws of the State of Florida.

_____(Seal)
Contractor

_____
Print Name

By:_____

_____
Print Name

State of Florida)
) ss.:
County of _____)

The foregoing instrument was acknowledged before me **by means of** _____ **physical presence or** _ **online notarization**, this __ day of _____, 202__, by _____. He/She was _____ personally known, _____ or produced _____ as a form of identification.

_____
Notary Public, State of Florida

My Commission Expires:

_____
Print Name of Notary Public

WAIVER AND RELEASE OF LIEN UPON PROGRESS PAYMENT

Owner: Village of Palmetto Bay
Project: **SW 82nd Bike Lanes Improvements**

Invitation to Bid#: 2026-11-002

Date: _____

WHEREAS, the Undersigned _____ in consideration of payment in the amount of $_____ which is hereby acknowledged, does waive, release and relinquish its right to claim a lien or liens for work performed and/or materials furnished to the Owner on the Project through the above date. In addition, Undersigned does waive, release and relinquish its right to claim against the Payment Bond of Contractor. This Waiver and Release of Lien Upon Progress Payment is given pursuant to Section 713.20(3) of the Construction Lien law.

The Undersigned expressly agrees to indemnify and save Owner and the Project harmless from any and all costs and expenses, including reasonable attorney's fees, arising out of any claims by any claimant who might claim that they have not been paid for services or material furnished by or through the Undersigned for the Project through the above date.

_____ (Seal)
Contractor

_____
Print Name

By:_____

_____
Print Name

State of Florida)
) ss.:
County of _____)

The foregoing instrument was acknowledged before me **by means of** _____ **physical presence or** _ **online notarization**, this __ day of _____, 202__, by _____. He/She was _____ personally known, _____ or produced _____ as a form of identification.

_____
Notary Public, State of Florida

My Commission Expires:

_____
Print Name of Notary Public

WAIVER AND FINAL RELEASE OF LIEN

Owner: Village of Palmetto Bay
Project: **SW 82nd Bike Lanes Improvements**

Invitation to Bid#: 2026-11-002

Date: _____

The Undersigned _____, for and in consideration of the final payment in the sum of $_____, hereby acknowledges receipt of final payment and all previous payments paid to Undersigned. In consideration of the payments received as set forth above, the undersigned hereby:

1. Represents that all work to be performed by Undersigned for the Project has been fully completed and that all persons, entities, lienors and claimants who furnished material, labor and/or services incident to the completion of said work and through the Undersigned have been paid in full.

2. Does waive, release, remise and relinquish its right to claim, demand, or impose a lien or liens or make any claim against the Payment Bond of the Contractor, for work done or materials and/or services furnished on any of the premises or property owned by the Owner.

3. Warrants that the work performed by the Undersigned on the Project (including the work performed by any person or company working through the Undersigned) is and shall be lien free, and that any person or company hired by the Undersigned does not have, nor shall have, any right to place any contractors' lien or other lien, bond, claim or other encumbrance on the Project or the property of the Owner.

4. States that this Final Release of Lien is made by the Undersigned with full knowledge of the applicable laws of the State of Florida. In addition to such rights as may be afforded to Owner under said applicable laws, the Undersigned expressly agrees to indemnify and hold the Owner harmless from any and all costs and expenses, including reasonable attorney's fees, arising out of claims by any laborers, subcontractors, sub-subcontractors, materialmen, lienors or other claimants who might claim that they have not been paid for services or material furnished by or through Undersigned in connection with the work performed on the Project.

_____(Seal)
Contractor

_____
Print Name

By:_____

_____
Print Name

State of Florida)
) ss.:
County of _____)

The foregoing instrument was acknowledged before me **by means of _____ physical presence or _ online notarization**, this __ day of _____, 202__, by _____. He/She was _____ personally known, _____ or produced _____ as a form of identification.

_____
Notary Public, State of Florida

My Commission Expires:

_____
Print Name of Notary Public

SECTION 10.0: Exhibits

Draft Contract for: SW 82nd Bike Lanes Improvements

MASTER AGREEMENT FOR THE _____

THIS AGREEMENT (the "Agreement") is entered into as of the Effective Date (defined in Section 1, below) by and between the Village of Palmetto Bay (the "Village"), a Florida Municipal Corporation, located at 9705 East Hibiscus Street, Florida, 33157, and _____ (the "Company" and, together with the Village, the "Parties"), a Florida corporation, located at _____ and whose Federal Employer Identification Number is _____.

WHEREAS, the Village desires to employ the Company to provide the _____, as more particularly set forth in Exhibit "___" hereto (the "Work"); and

WHEREAS, the Village has solicited for these services via an advertised invitation to bid ("ITB# _____") from the Company; and

WHEREAS, the Company and the Village have agreed to enter into an agreement and represents that it is competent, qualified, capable, and prepared to do so according to the terms and conditions stated herein.

NOW, THEREFORE, in consideration of the mutual understanding and covenants, the Village and the Company hereby agree, as follows:

1.0 Effective Date; Term

1.1 This Agreement shall take effect on the date (the "Effective Date") of its execution by the Village.

1.2 The term of this Agreement shall commence upon the issuance by the Village of a "Notice to Proceed" ("NTP"), shall remain in effect until the Work has been completed and the Village has satisfactorily accepted the Work performed.

After issuance of the NTP from the Village, the Company shall perform their Work and be finished no later than _____. The Village Manager reserves the right to extend the completion deadline given time factors such as a delay in receipt of materials by the Company, etc. at his sole discretion, with no assessing of damages for failure to meet deadline as described in the signed Agreement.

DRAFT

2.0 Services to Be Performed by Company

2.1 The Village retains the Company to furnish those services and to perform those tasks (collectively, the "Services") further described in the Village's ITB, to include all attachments and addenda, which are incorporated into this Agreement by this reference, attached as composites Exhibit "___", Exhibit "___", Exhibit "___", Exhibit "___" and Exhibit "___" and made a part of this Agreement. In the event there is a conflict between the terms of Exhibit ___, or ___, and this Agreement, the terms of this Agreement, including Exhibits ___, ___ and ___ shall prevail and then the following priority is established thereafter:

Exhibit "A": ITB# 2026-11-002

Exhibit "B": Bid Sheet submitted by _____

Exhibit "C": Resolution No. 2026-___

Exhibit "D": Work Authorization

2.2 When the Village requires the Company to perform Services, the Village, by the Division Director, _____, will issue a Work Authorization to the Company stating the specific scope of services and all provisions of this Agreement shall apply to the Work Authorization with full force and effect as if appearing in full within each Work Authorization. Each Work Authorization will also state the following information: (1) specific scope of services, (2) work schedule, and (3) anticipated start and completion dates. Each Work Authorization shall become effective upon due execution and issuance of a purchase order.

2.3 The Company is not authorized to undertake any work without a duly executed Work Authorization and corresponding purchase order, which shall specify the services to be performed and the time to be completed.

2.4 Exclusive Provider. The Company recognizes and acknowledges that the Village may not utilize several different companies to perform the same or similar Services for the Village and that the Company will be sole company to perform any such Services.

2.5 Work Authorizations Valid After Agreement Expiration. When the Company and the Village enter into a Work Authorization where the term of the Work Authorization expires on a date that is later than the date that the Agreement expires, the Company and the Village agree that the terms of this Agreement and any amendments, attachments or provisions thereof shall automatically extend through and until the expiration (including any extension or amendment

DRAFT

thereto) so the full completion of the requirements of the Work Authorization have been performed. Cancellation by the Village of any remaining services prior to the Company's full completion of the requirements of the Work Authorization shall cause the terms of this Agreement to terminate at the same time as the Work Authorization. This Section 2.5 applies only when the expiration of the Work Authorization extends beyond the expiration of this Agreement. This section does not apply when a Work Authorization expires or is cancelled prior to the expiration of this Agreement.

3.0 Compensation

3.1 General

3.1.1 In consideration for its providing the Services, the Village shall pay the Company in accordance with the Bid Sheet set forth in Exhibit "C" which is attached and made a part of this Agreement.

3.1.2 The Company shall attach all appropriate cost substantiations to the invoice and shall deliver the invoices monthly to:

Village of Palmetto Bay

_____ Department

9705 E. Hibiscus Street

Palmetto Bay, FL 33157

3.1.3 The Company will clearly state "Final Invoice" on the Company's final/last billing for the Services rendered to the Village. The Company's submission of a Final Invoice is its certification that all Services have been properly performed and all charges and costs have been invoiced to the Village. This account will be closed upon the Village's receipt of a Final Invoice. The Company waives any charges not properly included on its Final Invoice.

3.1.4 The Village's payment of the Final Invoice shall not constitute evidence of the Village's acceptance of the Company's performance of the Service or the Village's acceptance of any Work.

3.1.5 By submitting an invoice, the Company's project manager or designated payroll officer is attesting to the correctness and accuracy of all charges.

3.2 Disputed Invoices

3.2.1 In the event that all or a portion of an invoice submitted to the Village for payment to the Company is disputed, the Village shall notify the Company within fifteen (15)

DRAFT

working days of receipt of the invoice of the objection, modification or additional documentation request. The Company shall provide the Village with additional backup documentation within five working days of the date of the Village's notice. The Village may request additional information, including but not limited to, all invoices, time records, expense records, accounting records, and payment records of the Company. The Village, at its sole discretion, may pay to the Company the undisputed portion of the invoice. The Parties shall endeavor to resolve the dispute in a mutually agreeable fashion.

3.3 Agreement Price. The guaranteed maximum price ("GMP") shall include all Work necessary for the proper execution and completion of the Project. Based on the Company's bid the total amount is Eighty-Three Thousand Seven Hundred Fifty-Four Dollars and Zero Cents ($83,754.00). The Company shall give a detailed description of any Work that requires additional compensation if the Services exceeds the GMP. Any additional compensation must be approved by the Village and which can be denied in its sole discretion. The Company shall fund any additional costs that exceed the GMP if the Company either failed to provide a detailed description and justification for the need for the additional amount or if the Village denies additional compensation.

The payment shall be as follows: Company shall submit invoices to: Village of Palmetto Bay, _____ Department, _____, Palmetto Bay, Florida 33157. Only Work that has been signed off as satisfactorily completed can be subject to payment.

4.0 Company's Responsibilities

4.1 The Company shall be responsible for the professional quality, accuracy, competence, methodology, and the coordination of all Services performed pursuant to this Agreement.

4.2 The Village's review, approval, acceptance, or payment for any of the Company's Services shall not be construed to: (i) operate as a waiver of any rights the Village possesses under this Agreement; or (ii) waive or release any claim or cause of action arising out of the Company's performance or nonperformance of this Agreement. The Company shall be and will always remain liable to the Village in accordance with applicable law for any and all damages to the Village caused by the Company's negligent or wrongful performance or nonperformance of any of the Services to be furnished under this Agreement.

DRAFT

5.0 Ownership of Documents

All analyses, reference data, bills, completed reports, or any other form of written instrument or document created or resulting from the Company's performance of the Services pursuant to this Agreement shall become the property of the Village after payment is made to the Company for such instruments or documents.

6.0 Termination

6.1 **Termination without Cause.** The Village may terminate this Agreement, in whole or in part, at any time, either for the Village's convenience or because of the failure of the Company to fulfill its obligations under this Agreement, subject to the cure period provided in Section 27.0, by delivering written notice to the Company. Upon receipt of such notice, the Company shall:

6.1.1 Immediately discontinue all Work and affected Services unless the notice directs otherwise, and

6.1.2 Deliver to the Village all data, reports, summaries, and any and all such other information and materials of whatever type or nature as may have been accumulated by the Company in performing this Agreement, whether completed or in process.

6.2 **Termination with Cause.** Without waiving the right to terminate without cause, the Village may issue a written notice claiming breach of Contract and giving the Company ten (10) calendar days to cure the default. If the alleged breach of Contract is not cured, then the Village may terminate the Contract and be excused from further performance following termination. However, termination of the Contract will not relieve the Company of any deliverables and Work product due prior to the termination of the Contract, including but not be limited to reports, statements of accounts, payments due the Village and any other records requested by the Village prior to the termination of the Contract. The Village shall not be liable for any damages for lost profits, special damages, consequential damages, or business interruption on account of the Village's decision to terminate this Contract. Additionally, the Company agrees that in the event this Contract is terminated for the Village's breach, the damages that the Company may have against the Village shall be limited to actual compensatory damage, and in no event more than the amount in paragraph 27, below.

DRAFT

6.3 Unless in dispute or subject to the Village's right of set-off or other remedy, the Company shall be paid for Work and Services actually rendered to the date of termination.

6.4 The rights and remedies of the Village provided for in this Section 6 are in addition and supplemental to any and all other rights and remedies provided by law or under this Agreement.

6.5 Liquidated Damages. The Parties recognize that time is of the essence of this Agreement and that the Village will suffer financial loss and other damages if the Work is not substantially or finally complete within the time specified herein. They also recognize the expense and difficulties involved in a legal or arbitration proceeding. The Company acknowledges and agrees that the actual damages which the Village will suffer in the event of delay in achieving Substantial Completion or Final Completion of the Work are difficult, if not impossible, to determine and that the liquidated damages described are a fair and reasonable estimate of the delay damages which the Village is expected to suffer in the event of such delay. Accordingly, as actual damages cannot be ascertained, the Parties agree that as liquidated damages for delay, but not as a penalty, the Company shall pay the Village the amount of One Thousand and 00/100 Dollars ($1,000.00) for each day after the time specified in this Agreement for Substantial Completion until the Work is substantially complete.

Liquidated damages shall be deducted from the Company's applications for payment. However, if at the time of the Company's final application for payment, the Company is owed insufficient amounts to fully cover the deduction for liquidated damages, the Company shall pay the amount due within ten (10) days of written demand by the Village.

7.0 No Contingent Fees

The Company warrants that it has not employed or retained any company or person, other than a bona fide employee working solely for the Company to solicit or secure this Agreement and that it has not paid or agreed to pay any person, company, corporation, individual or firm, other than a bona fide employee working solely for the Company, any fee, commission, percentage, gift, or other consideration contingent upon or resulting from award of or making of the Agreement. For the breach or violation of this provision, the Village shall have the right to terminate the Agreement at its sole discretion, without liability and to deduct from the Agreement price, or otherwise recover, the full amount of such fee, commission, percentage, gift, or consideration.

DRAFT

8.0 Assignment

The Company shall not assign, transfer, or encumber this Agreement, or any interest herein, under any circumstances, without the express written consent of the Village.

9.0 Professional Associates and Subcontractors

If the Company requires the assistance of any professional associates or subcontractors in connection with it providing the Services the Company must obtain the prior express written approval of the Village, which the Village may withhold in its discretion, before any such professional associate or subcontractor may perform any Work for the Village. If after obtaining the Village's approval the Company utilizes any professional associates or subcontractors in the delivery of the Services then the Company shall remain solely and fully liable to the Village for the performance or nonperformance of all such professional associates and subconsultants. The failure of a professional associate or subcontractors to timely or properly perform any of its obligations to the Company shall not relieve the Company of its obligations to the Village under this Agreement.

10.0 Indemnification of Village

The Company shall indemnify, defend and hold harmless the Village and its officers, employees, agents and instrumentalities from any and all liability, losses or damages, including attorneys' fees and costs of defense at both trial and appellate levels, in which the Village or its officers, employees, agents or instrumentalities may incur as a result of claims, demands, suits, causes of actions or proceedings of any kind or nature arising out of, relating to or resulting from the performance of this Agreement by the Company or its employees, agents, servants, partners, principals or subcontractors. The Company shall pay all claims and losses in connection therewith and shall investigate and defend all claims, suits or actions of any kind or nature in the name of the Village, and shall pay all costs, judgments, and attorney's fees which may issue as a result of the Company's negligence, at both trial and appellate levels. The Company expressly understands and agrees that any insurance required by this Agreement or otherwise provided by the Company shall in no way limit the responsibility to indemnify, hold harmless and defend the Village or its officers, employees, agents, and instrumentalities. One Percent (1%) of the Agreement amount shall represent the consideration to be provided for this Indemnification. Nothing contained herein shall be deemed a waiver of Sovereign Immunity provided to the Village under Section 768.28, Florida Statutes.

DRAFT

11.0 Insurance/Bond Requirements

The Company shall maintain at all times the following minimum levels of insurance and shall, without in any way altering its liability, obtain, pay for and maintain insurance for the coverage and amounts of coverage not less than those set forth below. The Company shall provide the Village original Certificates of Insurance satisfactory to the Village to evidence such coverage before any Work commences. The Village shall be named as an additional insured on General Liability policies. General Liability and Workers' Compensation policies shall contain a waiver of subrogation in favor of Village. The commercial General Liability Policy shall provide (by endorsement if necessary) contractual liability coverage for the contractual indemnity stated in Section 10, above. All insurance coverage shall be written with a company having an A.M. Best rating of at least the "A" category and size category of VIII. The Company's self-insured retention or deductible per line of coverage shall not exceed $25,000 without the permission of the Village. In the event of any failure by the Company to comply with the provisions of this Section 11.0, the Village may, at its option, upon notice to the Company suspend Company's performance of the Services for cause until there is full compliance. Alternatively, the Village may purchase such insurance at the Company's expense, provided that the Village shall have no obligation to do so and if the Village shall do so, the Company shall not be relieved of or excused from the obligation to obtain and maintain such insurance amounts and coverage.

Commercial General Liability. $1,000,000.00 combined single limit of liability for bodily injuries, death and property damage, and personal injury resulting from any one occurrence, including the following coverages:

Premises and Operations:

Broad Form Commercial General Liability Endorsement to include Blanket Contractual liability (specifically covering, but not limited to, the contractual obligations assumed by the Company); Personal Injury (with employment and contractual exclusions deleted); and Broad Form Property Damage coverage.

DRAFT

Independent Contractors:

Delete Exclusion relative to collapse, explosion and underground; Property Damage Hazards; Cross Liability Endorsement; and Contractual liability (specifically covering, but not limited to, the contractual obligations assumed)

Comprehensive Automobile Liability Insurance. $1,000,000.00 combined single limit of liability for bodily injuries, death and property damage resulting from any one occurrence, including all owned, hired, and non-owned vehicles.

Workers Compensation. The Company shall provide, pay for, and maintain workers compensation insurance on all employees, its agents or subcontractors as required by Florida Statutes.

Bond. If required, Performance and Payment Bonds must be received before Notice to Proceed is issued. Each Bond shall guarantee One Hundred Percent (100%) of the project, and subject to Village approval.

12.0 Public Entity Crimes

The Company declares and warrants that neither the Company nor any of the Company's affiliates, as that term is defined in Section 287.133, Florida Statutes, are subject to the restrictions in Section 287.133, Florida Statutes, regarding the commission of a public entity crime. If during the term of this Agreement, the Company or any affiliate is convicted of a public entity crime or is otherwise prohibited from performing work for or transacting business with the Village pursuant to Section 287.133, Florida Statutes, then the Company shall be in material default of this Agreement, and in such case, the Village shall have the rights and remedies as provided herein.

13.0 Non-Discrimination; Discriminatory Vendor List

The Company warrants and represents that all of its employees are treated equally during employment without regard to race, color, religion, gender, age or national origin.

Pursuant to Section 287.134, Florida Statutes, an entity or affiliate who has been placed on the discriminatory vendor list may not submit a bid, proposal, or reply on a contract to provide any goods or services to a public entity; may not submit a bid, proposal, or reply on a contract with a public entity for the construction or repair of a public building or public work; may not submit bids, proposals, or replies on leases of real property to a public entity; may not be awarded or perform

DRAFT

work as a contractor, supplier, subcontractor, or consultant under a contract with any public entity; and may not transact business with any public entity. By execution of this Agreement, the Company represents that it has not been placed on the discriminatory vendor list as provided in Section 287.134, Florida Statutes.

14.0 Designation of Party Representatives

14.1 Upon receipt of a request from the Company, the Village shall designate in writing one or more of its employees who are authorized to act by and on behalf of the Village to transmit instructions, receive information and interpret and define the Village's policy and decisions with respect to the Services to be provided pursuant to this Agreement.

14.2 The Company shall designate or appoint one or more Company representatives who are authorized to act on behalf of and to bind the Company regarding all matters involving the conduct of its performance pursuant to this Agreement.

15.0 All Prior Agreements Superseded

This Agreement incorporates and includes all prior negotiations, correspondence, conversations, agreements or understandings applicable to the matters contained herein and the Parties agree that there are no commitments, agreements or understandings concerning the subject matter of this Agreement that are not contained in this document or its designated exhibits. Accordingly, it is agreed that no deviation from the terms hereof shall be predicated upon any prior representations or agreements, whether oral or written.

16.0 Modifications, Amendments or Alterations

No modification, amendment or alteration in the terms or conditions contained herein shall be effective unless agreed to and executed in writing by both parties to this Agreement in a form acceptable to the Village.

This writing and exhibits contain the entire Contract of the Parties. No representations were made or relied upon by either Party, other than those that are expressly set forth. No agent, employee, or other representative of either Party is empowered to modify and amend the terms of this Contract, unless executed in writing with the same formality as the execution of this Contract. No waiver of any provision of this Contract shall be valid or enforceable unless such waiver is in writing and signed by the Party granting such waiver.

DRAFT

17.0 Independent Contractor

Nothing stated in this Agreement is intended or should be construed in any manner as creating or establishing a relationship of co-partners between the Parties, or as constituting the Company (including its officers, employees, and agents) as the agent, representative, or employee of the Village for any purpose, or in any manner, whatsoever. The Company is to be and shall remain forever an independent Company with respect to all Services performed under this Agreement. The Company shall not pledge the Village's credit or make the Village a guarantor of payment or surety for any contract, debt, obligation, judgment, lien or any form of indebtedness and the Company shall have no right to speak for or bind the Village in any manner.

18.0 Public Records Law

(a) The Company acknowledges the Village's obligations under Article I, Section 24, of the Florida Constitution and under Chapter 119, Florida Statutes, to release public records to members of the public upon request and comply in the handling of the materials created under this Agreement. The Company further acknowledges that the constitutional and statutory provisions control over the terms of this Agreement. In association with its performance pursuant to this Agreement, the Company shall provide all requested documents to the Village which shall determine whether to release them or exert a claim for exemption or privilege.

(b) Without in any manner limiting the generality of the foregoing, to the extent applicable, the Company acknowledges its obligations to comply with Section 119.0701, Florida Statutes, with regard to public records, and shall:

(1) keep and maintain public records required by the Village to perform the services required under this Agreement;

(c) **IF THE COMPANY HAS QUESTIONS REGARDING THE APPLICATION OF CHAPTER 119, FLORIDA STATUTES, TO THE COMPANY'S DUTY TO PROVIDE PUBLIC RECORDS RELATING TO THIS AGREEMENT, CONTACT THE VILLAGE'S CUSTODIAN OF PUBLIC RECORDS AT:**

Village of Palmetto Bay
Clerk's Office
9705 E. Hibiscus Street
Palmetto Bay, FL 33157

DRAFT

305-259-1234
marocha@palmettobay-fl.gov

19.0 Compliance with Laws and Regulations

In providing all Services pursuant to this Agreement, the Company shall abide by all statutes, ordinances, rules, and regulations pertaining to or regulating the provisions of such Services, including those now in effect and hereafter adopted. Any violation of said statutes, ordinances, rules, or regulations shall constitute a material breach of this Agreement and shall entitle the Village to terminate this Agreement immediately upon delivery of written notice of termination to the Company.

20.0 Governing Law and Venue

This Agreement shall be governed in all respects by the laws of the State of Florida and any litigation with respect thereto shall be brought only in the courts of Miami-Dade County. Each Party shall be responsible for its own attorneys' fees and other legal costs and expenses.

21.0 Notices

Whenever either Party desires to give notice unto the other, it must be given by written notice, delivered (i) in person, (ii) via registered or certified United States mail, postage prepaid with return receipt requested, or (iii) via nationally recognized overnight delivery service, and addressed to the Party for whom it is intended at the place last specified by each Party. The place for giving of notice shall remain such until it is changed by written notice delivered in compliance with the provisions of this Section 22. For the present, the Parties designate the following as the respective places for giving of notice, to wit:

For Village: **Nick Marano**
Village of Palmetto Bay
9705 E. Hibiscus Street
Palmetto Bay, FL 33157

For Company:

DRAFT

22.0 Severability

The invalidity, illegality, or unenforceability of any provision of this Agreement, or the occurrence of any event rendering any portion or provision of this Agreement void, shall in no way affect the validity or enforceability of any other portion or provision of the Agreement; any void provision shall be deemed severed from the Agreement and the balance of the Agreement shall be construed and enforced as if the Agreement did not contain the particular portion or provision held to be void. The Parties further agree to reform the Agreement to replace any stricken provision with a valid provision that comes as close as possible to the intent of the stricken provision. The provisions of this section shall not prevent the entire Agreement from being void should a provision which is of the essence of the Agreement be determined to be void.

23.0 Annual Appropriations

Company acknowledges that during any fiscal year the Village shall not expend money, incur any liability, or enter into any agreement which by its terms involves the expenditure of money in excess of the amounts budgeted as available for expenditure during such fiscal year. Accordingly, any agreement, verbal or written, the Village may make in violation of this fiscal limitation is null and void, and no money may be paid on such agreement. The Village may enter into agreements whose duration exceeds one year; however, any such agreement shall be executory only for the value of the services to be rendered which the Village agrees to pay as allocated in its annual budget for each succeeding fiscal year. Accordingly, the Village's performance and obligation to pay the Company under this Agreement is contingent upon annual appropriations being made for that purpose.

24.0 Unauthorized Alien(s)

The Company shall not employ or utilize unauthorized aliens in the performance of the Services provided pursuant to this Agreement. The Village shall consider the employment or utilization of unauthorized aliens a violation of Section 274A(e) of the Immigration and Naturalization Act (8 U.S.C. 1324a) and a cause for the Village's unilateral termination of this Agreement. When delivering executed counterparts of this Agreement to the Village, the Company shall also deliver a completed and executed counterpart of the attached "AFFIDAVIT CERTIFICATION IMMIGRATION LAWS" form.

25.0 Company Representations

25.1 The Company hereby represents and warrants the following to the Village:

DRAFT

25.1.1 Company is a corporation that is duly organized and existing in good standing under the laws of the State of Florida with full right and authority to do business within the State of Florida.

25.1.2 Company's performance under this Agreement will not violate or breach any contract or agreement to which the Company is a party or is otherwise bound, and will not violate any governmental statute, ordinance, rule, or regulation.

25.1.3 Company has the full right and authority to enter into this Agreement and to perform its obligations in accordance with its terms.

25.1.4 Company now has and will continue to maintain all licenses and approvals required to conduct its business, and that it will at all times conduct its business activities in a reputable manner.

25.1.5 Company has no obligation or indebtedness that would impair its ability to fulfill the terms of this Agreement.

25.1.6 Company has the personnel and experience necessary to perform all Services in a professional and workmanlike manner.

25.1.7 Company shall exercise the same degree of care, skill, and diligence in the performance of the Services as provided by a professional of like experience, knowledge and resources, under similar circumstances.

25.1.8 Company shall, at no additional cost to Village, re-perform those Services which fail to satisfy the foregoing standard of care or which otherwise fail to meet the requirements of this Agreement.

25.1.9 Each individual executing this Agreement on behalf of the Company is authorized to do so.

26.0 Default and Remedy

If the Company materially defaults in its obligations under this Agreement and fails to cure the same within fifteen (15) days after the date the Company receives written notice of the default from the Village, then the Village shall have the right to (i) immediately terminate this Agreement by delivering written notice to the Company, and (ii) pursue any and all remedies available in law, equity, and under this Agreement. If the Village materially defaults in its obligations under this Agreement and fails to cure the same within fifteen (15) days after the date the Village receives written notice

DRAFT

of the default from the Company, then the Company shall have the right to immediately terminate this Agreement by delivering written notice to the Village. Upon any such termination, the Village shall pay the Company the full amount due and owing for all Services performed through the date of Agreement termination.

27.0 Limitation of Liability

The Village desires to enter into this Contract only if in so doing the Village can place a limit on its liability for any cause of action for breach of this Contract, so that its liability for any such breach never exceeds the sum of $_____. The Company hereby expresses its willingness to enter into this Contract with a $_____ limitation on recovery for any action for breach of contract. According, and in consideration of the separate consideration of $_____, the receipt of which is hereby acknowledged, the Village shall not be liable to the Company for damages to the Company in an amount in excess of $_____2, for any action for breach of contract arising out of the performance non-performance of any obligations imposed upon the Village by this Contract. Nothing contained in this paragraph or elsewhere in this Contract is in any way intended to be a waiver of limitation placed upon the Village's liability as set forth in Florida Statutes Section 768.28.

IN NO EVENT SHALL THE VILLAGE BE LIABLE TO THE COMPANY FOR INDIRECT, INCIDENTAL, CONSEQUENTIAL, SPECIAL, EXEMPLARY, OR PUNITIVE DAMAGES OF ANY KIND OR NATURE, INCLUDING LOSS OF PROFIT, WHETHER FORESEEABLE OR NOT, ARISING OUT OF OR RESULTING FROM THE NONPERFORMANCE OR BREACH OF THIS AGREEMENT BY THE VILLAGE WHETHER BASED IN AGREEMENT, COMMON LAW, WARRANTY, TORT, STRICT LIABILITY, CONTRIBUTION, INDEMNITY OR OTHERWISE.

28.0 Waiver

A waiver by either the Village or Company of any breach of this Agreement shall not be binding upon the waiving party unless such waiver is in writing. In the event of a written waiver, such a waiver shall not affect the waiving party's rights with respect to any other or further breach of this Agreement. The making or acceptance of a payment by either Party with the knowledge of the other Party's existing default or breach of the Agreement shall not waive such default or breach, or any subsequent default or breach of this Agreement, and shall not be construed as doing so.

DRAFT

29.0 Attorneys' Fees and Costs

Each Party shall be responsible for its own legal and attorneys' fees, costs and expenses incurred in connection with any dispute or any litigation arising out of, or relating to this Agreement, including attorneys' fees, costs, and expenses incurred for any appellate or bankruptcy proceedings.

30.0 Force Majeure

Either Party hereunder may be temporarily excused from performance if an Event of Force Majeure directly or indirectly causes its nonperformance. An "Event of Force Majeure" is defined as any event which results in the prevention or delay of performance by a party of its obligations under this Agreement and which is beyond the reasonable control of the nonperforming party. It includes, but is not limited to fire, flood, earthquakes, storms, lightning, epidemic, war, riot, civil disturbance, sabotage, and governmental actions. Neither Party shall be excused from performance if non-performance is due to forces which are reasonably preventable, removable, or remediable and which the non-performing party could have, with the exercise of reasonable diligence, prevented, removed, or remedied prior to, during, or immediately after their occurrence. Within five (5) days after the occurrence of an Event of Force Majeure, the non-performing party shall deliver written notice to the other Party describing the event in reasonably sufficient detail, along with proof of how the event has precluded the non-performing party from performing its obligations hereunder, and a good faith estimate as to the anticipated duration of the delay and the means and methods for correcting the delay. The non-performing party's obligations, so far as those obligations are affected by the Event of Force Majeure, shall be temporarily suspended during, but no longer than, the continuance of the Event of Force Majeure and for a reasonable time thereafter as may be required for the non-performing party to return to normal business operations. If excused from performing any obligations under this Agreement due to the occurrence of an Event of Force Majeure, the non-performing party shall promptly, diligently, and in good faith take all reasonable action required for it to be able to commence or resume performance of its obligations under this Agreement. During any such time period, the non-performing party shall keep the other Party duly notified of all such actions required for it to be able to commence or resume performance of its obligations under this Agreement.

DRAFT

31.0 Key Personnel

The Company shall notify the Village if any of the Company's Key Personnel (as defined, below) change during the Term of the Agreement. To the extent possible, the Company shall notify the Village at least ten (10) days prior to any proposed change in its Key Personnel. At the Village's request the Company shall remove without consequence to the Village any of the Company's, subcontractors, agents or employees and replace the same with an appropriate substitute having the required skill and experience necessary to perform the Services. The Village shall have the right to reject the Company's proposed changes in Key Personnel. The following individuals shall be considered "Key Personnel:"

Name:

32.0 No Construction Against Drafter

The Parties acknowledge that this Agreement and all the terms and conditions contained herein have been fully reviewed and negotiated by the Parties. Accordingly, any rule of construction to the effect that ambiguities are to be resolved against the drafting Party shall not apply in interpreting this Agreement.

33.0 Employment Eligibility Verification (E-Verify)

A. Unless otherwise defined herein, terms used in this Section which are defined in Section 448.095, Florida Statutes, as may be amended from time to time, shall have the meaning ascribed in said statute.

B. Pursuant to Section 448.095(5), Florida Statutes, the Company hereto, and any subconsultant thereof, must register with and use the E-Verify system to verify the work authorization status of all new employees of the Company or subconsultant. The Company acknowledges and agrees that (i) the Village and the Company may not enter into this Agreement, and the Company may not enter into any subcontracts hereunder, unless each Party to this Agreement, and each Party to any subcontracts hereunder, registers with and uses the E-Verify system; and (ii) use of the U.S. Department of Homeland Security's E-Verify System and compliance with all other terms of this Certification and Section 448.095, Fla. Stat., is an express condition of this Agreement, and the Village may treat a failure to comply as a material breach of this Agreement.

C. By entering into this Agreement, the Company becomes obligated to comply with the provisions of Section 448.095, Fla. Stat., "Employment Eligibility," as amended from time to time.

DRAFT

This includes but is not limited to utilization of the E-Verify System to verify the work authorization status of all newly hired employees, and requiring all subconsultants to provide an affidavit attesting that the subconsultant does not employ, contract with, or subcontract with, an unauthorized alien. The Company shall maintain a copy of such affidavit for the duration of this Agreement. Failure to comply will lead to termination of this Agreement, or if a subconsultant knowingly violates the statute or Section 448.09(1), Fla. Stat., the subcontract must be terminated immediately. If this Agreement is terminated pursuant to Section 448.095, Fla. Stat., such termination is not a breach of contract and may not be considered as such. Any challenge to termination under this provision must be filed in the Eleventh Judicial Circuit Court of Florida no later than 20 calendar days after the date of termination. If this Agreement is terminated for a violation of Section 448.095, Fla. Stat., by the Company, the Company may not be awarded a public contract with the Village for a period of 1 year after the date of termination. The Company shall be liable for any additional costs incurred by the Village as a result of the termination of this Agreement. Nothing in this Section shall be construed to allow intentional discrimination of any class protected by law.

34.0 Noncoercive Conduct For Labor

The Company has complied with the requirements of Section 787.06(13), Florida Statutes, by having an officer or other authorized representative of the Company execute an Affidavit, which attests, under penalty of perjury, that it does not use coercion for labor or services, as defined in Section 787.06, Florida Statutes

35.0 Scrutinized Companies

The Company certifies that it and its subcontractors are not on the Scrutinized Companies that Boycott Israel List. Pursuant to Section 287.135, F.S., the Village may immediately terminate this Agreement at its sole option if the CONSULTANT or its subcontractors are found to have submitted a false certification; or if the CONSULTANT, or its subcontractors are placed on the Scrutinized Companies that Boycott Israel List or is engaged in the boycott of Israel during the term of the Agreement

36.0 Preservation of Village Property

The Company shall provide and install suitable safeguards, approved by the Village, to protect Village property from injury or damage. If Village property is injured or damaged resulting from the Company's operations, it shall be replaced or restored at the Company's expense. The property shall

be replaced or restored to a condition as good as when the Company began work. The Company shall keep the premises and surrounding area free from accumulation of debris and trash related to the Work. At the completion of the Work, the Company shall remove all construction equipment, machinery and surplus material and properly dispose of waste material.

37.0 Public and Employee Safety

Whenever the Company's operations create a condition hazardous to the public or Village employees, it shall, at its expense and without cost to the Village, furnish, erect, and maintain such fences, temporary railings, barricades, lights, signs and other devices and take such other protective measures as are necessary to prevent accidents or damage or injury to the public, Village employees or Village property.

38.0 Federal and State Tax

The Village is exempt from payment of Florida State Sales and Use Taxes. The Company shall not be exempted from paying sales tax to its suppliers for materials used to fulfill contractual obligations with the Village, nor is the Company authorized to use the Village's Tax Exemption Number in securing such materials The Company shall be responsible for payment of its own and its share of its employee taxes, Workers Compensation and Social Security benefits.

39.0 Conflict of Interest

The Company agrees to adhere to and be governed by the Village's Conflict of Interest Ordinance 2-121, *et seq.*, which is incorporated by reference as if fully set forth.

40.0 Entire Agreement

No statements, representations, or warranty, either written or oral, from whatever source arising, except as expressly stated in this Agreement, shall have any legal validity between the Parties or be binding upon either. The Parties acknowledge that this Agreement contains the entire understanding and agreement of the Parties.

41.0 Captions and Paragraph Headings

Captions and paragraph headings contained in this Agreement are for convenience and reference only and in no way define, describe, extend, or limit the scope and intent of this Agreement, nor the intent of any of its provisions.

DRAFT

42.0 Joint Preparation

The preparation of this Contract has been a joint effort of the Parties and shall not be construed more severely against either Party. It is the Parties' further intention that this Agreement shall be construed liberally to achieve its intent.

43.0 Counterparts

This Agreement may be executed in one or more counterparts, each of which shall be deemed an original, but all of which shall constitute one and the same Agreement.

44.0 Warranty

The Company shall provide the Village will all applicable EXPRESS and IMPLIED warranties received by the manufacturer and/or the supplier of the materials the Company uses to carry out the Agreement. The Company specifically agrees that the warranties of MERCHANTIBILITY AND FITNESS FOR PARTICULAR PURPOSES SHALL BE APPLICABLE to work and the materials supplied.

45.0 Iron and Steel in Public Works Projects

Section 255.0993, Florida Statutes, requires local governmental entities to include a requirement in contracts for projects using any State funds that certain iron or steel products be produced in the United States, authorizes the minimal use of foreign steel and iron materials in certain circumstances, and exempts specified products from the requirement.

Should the use of American iron or steel causes an increase of total project cost by twenty (20) percent, or if materials are not readily available, or materials cannot be purchased in sufficient quantities.

DRAFT

IN WITNESS WHEREOF, the Parties hereto have executed this Agreement as of the Effective Date.

ATTEST:

By: _____
Village Clerk

By: _____
Village Manager

Date Signed By Village_____

Reviewed as to form and legal sufficiency for the sole use and benefit of the Village:

_____
Village Attorney Date

ATTEST:

By: _____

_____
PRINT NAME

_____
TITLE

Company Name:

By: _____

_____
PRINT NAME

_____
TITLE

Date: _____

SEAL

Attachments to this Solicitation

Exhibit "A": SW 82nd Bike Lanes Improvements Engineering Plans (.PDF FILE)

Exhibit "B": SW 82nd Bike Lanes Improvements Drainage Memorandum (.PDF FILE)

(***Total of 2 .pdf to download with solicitation***)

HARTEC GROUP

Village of Palmetto Bay
Village Clerk's Office
9705 E. Hibiscus Street
Palmetto Bay, FL 33157

Re: Introduction Letter

To whom it may concern:

We are pleased to introduce **Hartec Group, Inc.**, a construction company with a proven track record of excellence and a strong commitment to enhancing the communities we serve. We take great pride in delivering high-quality workmanship, reliable service, and thoughtful solutions on every project.

Our team is comprised of skilled and dedicated professionals who bring extensive industry experience, technical expertise, and a collaborative approach to each engagement. This commitment has allowed us to successfully partner with various municipalities and organizations on projects that support growth, safety, and long-term development.

We would welcome the opportunity to provide the Village of Palmetto Bay with the same level of professionalism and service we have delivered to other municipalities and to contribute positively to the Village's continued success. Should you have any questions or require additional information, please do not hesitate to contact the undersigned.

Best regards,

Garrett Hardie, Vice President

HARTEC GROUP

Company Chain of Authority

President
Maurice Hardie

Vice President and Senior Project Manager
Garrett Hardie

Senior Project Manager II
Ricardo Pell

Office Manager
Maria Hardie



Detail by Entity Name

Florida Profit Corporation
HARTEC GROUP, INC.

Filing Information

Document Number	P09000017199
FEI/EIN Number	26-4325232
Date Filed	02/24/2009
Effective Date	02/24/2009
State	FL
Status	ACTIVE
Last Event	RESTATED ARTICLES
Event Date Filed	11/08/2019
Event Effective Date	NONE

Principal Address

8200 SW 187 TER
CUTLER BAY, FL 33157

Changed: 11/08/2019

Mailing Address

P.O. BOX 562312
MIAMI, FL 33176

Changed: 11/08/2019

Registered Agent Name & Address

FLORIDA CORPORATE SERVICES LLC
3006 AVIATION AVENUE
STE. 2A
COCONUT GROVE, FL 33133

Name Changed: 02/03/2020

Address Changed: 02/03/2020

Officer/Director Detail

Name & Address

Title P

HARDIE, MAURICE
8200 SW 187 TERR
CUTLER BAY, FL 33157

Title VP

HARDIE, GARRETT
15840 SW 148 TERR
MIAMI, FL 33196

Annual Reports

Report Year	Filed Date
2023	02/17/2023
2024	04/17/2024
2025	04/23/2025

Document Images

04/23/2025 -- ANNUAL REPORT	View image in PDF format
04/17/2024 -- ANNUAL REPORT	View image in PDF format
02/17/2023 -- ANNUAL REPORT	View image in PDF format
04/11/2022 -- ANNUAL REPORT	View image in PDF format
02/23/2021 -- ANNUAL REPORT	View image in PDF format
02/03/2020 -- ANNUAL REPORT	View image in PDF format
11/08/2019 -- Restated Articles	View image in PDF format
05/01/2019 -- ANNUAL REPORT	View image in PDF format
05/01/2018 -- ANNUAL REPORT	View image in PDF format
05/04/2017 -- ANNUAL REPORT	View image in PDF format
04/29/2016 -- ANNUAL REPORT	View image in PDF format
01/11/2016 -- Amendment	View image in PDF format
11/30/2015 -- Amendment	View image in PDF format
04/29/2015 -- ANNUAL REPORT	View image in PDF format
04/21/2014 -- ANNUAL REPORT	View image in PDF format
04/01/2013 -- ANNUAL REPORT	View image in PDF format
03/18/2012 -- ANNUAL REPORT	View image in PDF format
04/03/2011 -- ANNUAL REPORT	View image in PDF format
09/21/2010 -- Reg. Agent Change	View image in PDF format
04/12/2010 -- ANNUAL REPORT	View image in PDF format
02/24/2009 -- Domestic Profit	View image in PDF format

4.1:
BID FORM

The following Bid Form is presented to assist the Village in evaluating the bid. This Bid Form reflects estimated quantities for the Total Bid as described above. After award, the Village reserves the right to modify estimated quantities subject to the unit price and eliminate line items if necessary. Payment shall be made for the items listed on the Bid Form on the basis of the Work actually performed and completed.

Item No.	Description	Unit	Quantity	Unit Price	Total
1	Mobilization	LS	1	$20,000	$ 20,000.00
2	Maintenance of Traffic	LS	1	$ 5000.00	$ 5,000.00
3	Storm Water Pollution Prevention Plan	LS	1	$ 2,000.00	$ 2,000.00
4	Site Restoration and Tie-In Grading	LS	1	$ 10,000.00	$ 10,000.00
5	Asphalt, SP-9.5, 1.5" Average Depth	SY	2200	$ 30.00	$ 66,000.00
6	Stabilized Subgrade, 12" Thick	SY	2200	$ 20.00	$ 44,000.00
7	Limerock Base, 8" Thick	SY	2200	$ 27.00	$ 59,000.00
8	Remove Existing Concrete, Asphalt, and Pavers	SY	930	$ 15.00	$ 13,950.00
9	ADA Accessible Catch Basin Grate	EA	1	$ 3000.00	$ 3000.00
10	Utility Fixture, Valve Assembly, Adjust/Modify	LS	1	$ 2000.00	$ 2000.00
11	Mailbox Relocation	EA	1	$ 1000.00	$ 1000.00
12	Sign Relocation	EA	2	$ 500.00	$ 1000.00
13	Sign and Post	EA	6	$ 1200.00	$ 7200.00
14	Concrete Sidewalk (6" thick max) (Sidewalk, Driveway, and Apron)	SY	190	$ 150.00	$ 28,800.00
15	Paver Driveway Restoration	LS	1	$ 5000.00	$ 5000.00
16	Pavement Marking	LS	1	$ 100,000.00	$ 100,000.00
				GRAND TOTAL	$ 360,950.00

Refer to pay item notes within contract plans for details of costs to be included within items.

The following Bid Item Notes apply to the bid items:

1. Bid Item 1 is a lump sum pay item for all mobilization costs and includes the construction of two (2) project signs that shall be displayed at approaches to the project area. The intent is that the sign will be freestanding. The sign shall display on both sides the project name, Village Logo, elected officials, and contact information. A detail of the sign is included in the plans. Shop drawings must be submitted for approval prior to ordering the project sign. Photos of the actual project sign must be submitted for approval prior to installation of the project signs.

   Mobilization will be paid at the following rates:
   a. 10% of contract completion - 25% of Mobilization.
   b. 25% of contract completion - 50% of Mobilization.
   c. 50% of contract completion - 100% of Mobilization.

2. Bid Item 2 is a lump sum pay item for a Maintenance of Traffic (MOT) and includes all pedestrian access maintenance. All crosswalks and sidewalks shall remain open and free of obstructions. Temporary painting for roadways and crosswalks shall be maintained throughout the project. Costs shall include the use of flagmen. Contractor to prepare and submit for review a MOT Plan per phase of construction. The MOT plan shall be prepared by an FDOT certified individual. No work shall begin until the MOT plan has been approved by the Village.
3. Bid Item 3 to include a complete stormwater pollution prevention plan (SWPPP). Notice of Intent fees and compliance with any SWPPP reporting. Include furnishing, installation, maintenance, and removal of items. This is a lump sum pay item to furnish, install, maintain, and remove floating turbidity barriers.
4. Bid Item 4 is a lump sum pay item for site restoration which includes the complete restoration of the roadway or driveways impacted by any construction activity adjacent to the roadway resurfacing project including but not limited to mobilization, clearing, and grubbing, striping removal, milling and resurfacing, asphalt, limerock, and base removal, limerock rework, asphalt overlay, utility adjustments, mailbox relocations, etc. Any swale areas impacted by the contractor outside of those indicated on the plans will be restored by the contractor at no additional cost to the Village. The pay item includes but is not limited to sod, landscaping, trees, excavation, new fill, limerock base preparation, grading, tamping, irrigation, driveway aprons (asphalt, pavers, stamped concrete, etc.), sidewalks, mailboxes, fences, pipes, curbs, etc. to an equal or better condition prior to construction. The contractor shall include the costs associated with a preconstruction video to confirm existing conditions. Any damage not confirmed by preconstruction video will be repaired at no additional cost to the Village.
5. Bid Item 5 includes the asphalt final overlay to the extents shown on the plans or lift of asphalt (minimum 1.5") to final grade. Pavement overlay to provide smooth and continuous grading through the entire asphalt overlay process to avoid areas of standing water. This item also includes the final lift of asphalt over all trench restoration.
6. Bid Item 6 and 7 include all costs associated with the stabilized subgrade and limerock base.
7. Bid Item 8 includes all costs associated with removal and disposal of existing concrete, asphalt, and pavers and includes saw cutting.
8. Bid Items 9 includes all costs associated with the installation of ADA accessible catch basin grates.
9. Bid Item 10 includes all costs associated with valve adjustments.
10. Bid Item 11 includes all costs associated with the relocation of existing mailboxes as needed.
11. Bid Item 12 includes all costs associated with the relocation of existing signs.
12. Bid Item 13 includes all costs associated with new signs and their installation.
13. Bid Item 14 includes all costs associated with installing concrete pavements to include concrete sidewalks, driveways, and aprons up to 6" thick.
14. Bid Item 15 includes all costs associated with the restoration of paver driveways. Contractor is responsible of replacing pavers in the case that pavers break.
15. Bid Item 16 is a lump sum pay item for pavement marking which includes all costs associated with, thermoplastic pavement markings, including temporary pavement markings prior to thermoplastic, and reflective pavement markers (RPMs).

Total Bid Amount..... $ 360,950.00

Total Bid Amount (in words): Three Hundred and sixty thousand nine Hundred fifty Dollars and zero cents

Signature of Official: _____

Name: Garrett Hardie

Title: Vice President

Company: Hartec Group Inc.

Date: 2/5/25

BID BOND

KNOW ALL MEN BY THESE PRESENTS, that we, Hartec Group, Inc. (hereinafter called the Principal), and American Surety Company (hereinafter called the Surety), a Corporation chartered and existing under the laws of the State of Indianapolis is authorized to do business in the State of Florida, and having an Agent resident therein, such Agent and Company acceptable to the Village of Palmetto Bay, are held and firmly bound unto the Village of Palmetto Bay (hereinafter called Village), in the sum of Five Percent of Amount Bid Dollars ($******5%*******), good and lawful money of the United States of America, to be paid upon demand of the said Village, to which payment well and truly to be made we bind ourselves, our heirs, executors, administrators, successors and assigns, jointly and severally and firmly by these presents.

WHEREAS; the above bounded Principal contemplates submitting or has submitted a Bid to the Village for furnishing all necessary labor, materials, equipment, machinery, tools, apparatus, services, all insurances and taxes, including but not limited to, state workmen's compensation and unemployment compensation insurance and taxes incurred in the performance of the Contract, and means of transportation for construction of:

VILLAGE OF PALMETTO BAY (the "Village")
SW 82nd Bike Lanes Improvements

for said Village, and;
WHEREAS; the Principal desires to file this Bond in accordance with law, in lieu of a certified Bidder's check otherwise required to accompany this Bid in the amount of five percent (5%) of the Base Bid.

NOW THEREFORE, the conditions of this obligation are such that, if the Bid be accepted, the Principal shall within ten (10) days after receipt of notification of the acceptance thereof, execute the Contract in accordance with the Invitation to Bid and Contact Documents and upon the terms, conditions and price set forth therein, in the form and manner required by the Village and execute sufficient and satisfactory Performance and Payment Bonds payable to the Village of Palmetto Bay, each in an amount of one hundred percent (100%) of the total Contract Price, as indicated in the Bid, in form and with security as set forth in the Invitation to Bid and Contract Documents satisfactory to the Village, then this obligation to be void, otherwise to be and remain in full force and virtue in law; and the Surety shall upon failure of the Principal to comply with any or all of the foregoing requirements within the time specified above immediately pay to the aforesaid Village upon demand the amount hereof in good and lawful money of the United States of America, not as a penalty but as liquidated damages.

IN WITNESS WHEREOF, THE said Hartec Group, Inc. , as "Principal" herein has caused these presents to be signed in its name, by its _____ under its corporation seal, and the said American Surety Company as "Surety" herein, has caused these presents to be signed in its name by its attorney-in-fact , under its corporate seal, this 3rd day of February , 2026 and attested by its power of attorney , A.D., 20 26 .

ATTEST:

Hartec Group, Inc.

By: _____ (Title)
(Principal)

ATTEST:

See Power of Attorney Attached

American Surety Company

By: _____
(Surety) Attorney-in-Fact
Michael A. Bonet

AMERICAN SURETY COMPANY ★★★ SEAL ★★★ INDIANA

(Attorneys-in-Fact who sign this bond must file with it a certified copy of their power-of-Attorney to sign said Bond).

Bond No.: Bid

AMERICAN SURETY COMPANY
Administrative Office: 201 E. 5th Street, Cincinnati, Ohio 45202

The number of persons authorized by this power of attorney is not more than 1.

POWER OF ATTORNEY

Know All Men by These Presents: That **American Surety Company**, a corporation organized and existing under and by virtue of the laws of the State of Indiana, does hereby nominate, constitute, and appoint the person or persons named below, each individually if more than one is named, its true and lawful attorney-in-fact, for it and in its name, place and stead to execute on behalf of said Company, as surety, any and all bonds, undertakings and contracts of suretyship, or other written obligations in the nature thereof; provided that the liability of the said Company on any such bond, undertaking or contract of suretyship executed under this authority shall not exceed the limit stated below.

Name	Address	Limit of Power
Michael A. Bonet	All of Miami, FL	$ 25,000,000.00

This Power of Attorney revokes all previous powers issued on behalf of the attorney(s)-in-fact named above.
IN WITNESS WHEREOF the **American Surety Company** has caused these presents to be signed and attested by its appropriate officers and its corporate seal hereunto affixed this 7th day of October, 2024.

ATTEST:

By: _____
Robert Kuzloski, Secretary

SEAL

By: _____
Timothy D. Martin, President

STATE OF OHIO, COUNTY OF HAMILTON – ss:

On this 7th day of October, 2024 before me, personally appeared Timothy D. Martin, to me known, being duly sworn, deposes and says that he is the President of **American Surety Company**, the Company described in and which executed the above instrument; that he knows the seal of the said Company; that the seal affixed to the said instrument is such corporate seal; that it was so affixed by authority of his office under the By-Laws of said Company, and the he signed his name thereto by like authority.

PATRICK J DEMMER
Notary Public, State of Ohio
Commission #: 2023-RE-661396
My Commission Expires 03-20-28

_____
Patrick J. Dremmer, Notary Public
State of Ohio

This Power of Attorney is granted by authority of the following resolutions adopted by the Board of Directors of **American Surety Company** by unanimous written consent effective October 2, 2024.

RESOLVED: That the President be and hereby is authorized, from time to time, to appoint one or more Attorneys-in-Fact to execute on behalf of the Company, as surety, any and all bonds, undertakings and contracts of suretyship, or other written obligations in the nature thereof; to prescribe their respective duties and the respective limits of their authority; and to revoke any such appointment at any time.

RESOLVED FURTHER: That the Company seal and the signature of the President and any Secretary or Assistant Secretary of the Company may be affixed by electronic means to any power of attorney or certificate of either given for the execution of any bond, undertaking, contract of suretyship, or other written obligation in the nature thereof, such signature and seal when so used being hereby adopted by the Company as the original signature of such officer and the original seal of the Company, to be valid and binding upon the Company with the same force and effect as though manually affixed.

CERTIFICATION

I, Robert Kuzloski, Secretary of **American Surety Company**, do hereby certify that the foregoing Power of Attorney and the Resolutions of the Board of Directors effective October 2, 2024 have not been revoked and are now in full force and effect.

Signed and sealed this 3rd day of February, 2026.

SEAL

_____
Robert Kuzloski, Secretary

This Power of Attorney is not effective unless a Bond Number or the word "Bid" is stated above.

PACW2000V1

Section 5.0: Bid Submission Requirements

BID SUBMITTAL CHECKLIST

In order to be responsive, the bidder must submit the following items:

A. **One (1) sealed envelope which includes:** One (1) original and a flash drive of your submittal no later than 11:00 a.m. EST February 5th, 2026.

Please be sure that if the package is mailed through FedEx, UPS, USPS, etc., that the package is addressed/labeled to the below department and address. The bid inside the package should also be addressed/labeled to the below department and address.

Village of Palmetto Bay
Village Clerk's Office
9705 E. Hibiscus Street
Palmetto Bay, FL, 33157

B. **Signed and completed forms from *Section 8*:**

Introduction letter with contact information
Years in Business
Lead team Information
Bid Form
5% Bid Bond
Section 8 (Required Bid Submittal Forms)
Addendum Acknowledgement

C. **Bidders are required to acknowledge receipt of any formal Addendum by signing the Addendum and including it with the bid submission.** A Bidder's failure to include a signed formal Addendum in its bid submission may deem its bid non-responsive.

SECTION 6.0: Evaluation and Selection Criteria

Evaluation Criteria

EVALUATION OF BIDS/BIDDERS

The Village reserves the right to accept any bid, any part, or parts thereof, or to reject any and all bids. The Village reserves the right to waive minor informalities or irregularities in the bids received, to accept any bid deemed advantageous to the Village, or to reject any and all bids submitted. Conditional bids, or those which take exception to the ITB documents without prior written approval from the Village, may be considered non-responsive and may be rejected.

Award of the Contract is subject to Village Council approval. Other aspects of approval are experience, capability, necessary facilities, and financial resources to complete the Contract in a satisfactory manner within the required time.

The Village has the right during the evaluation to contact bidders for additional essential information to complete their examination.

SECTION 7.0: Schedule of Events

The anticipated schedule for selection of Company is shown below:

Bid Phase	Date	Location	Time (If Applicable)
ITB is advertised and issued by Village	Tuesday, January 20th, 2026	Posted on the Miami's Community Newspaper and Villages' Website	
Non-Mandatory Pre-Bid Meeting	Tuesday, January 27th, 2026	Village of Palmetto Bay Municipal Center 9705 E. Hibiscus St, Palmetto Bay, FL 33157	11:00 a.m.
Last day to Submit Questions	Monday, February 2nd, 2026	Via Email to abencomo@palmettobay-fl.gov	3:00 p.m.
Addendum Posting	Monday, February 2nd, 2026	Posted on DemandStar	5:00 p.m.
Bid Submission Date	Thursday, February 5th, 2026	Village of Palmetto Bay Municipal Center **ATTENTION TO THE VILLAGE CLERK** 9705 E. Hibiscus Street Palmetto Bay, Florida 33157	11:00 a.m.

7.01 Contract Award

A. Competency and Responsibility of Company
The Village reserves full discretion to determine the competence and financial status, of the bidder. The bidder will provide, in a timely manner, all information that the Village deems necessary to make such a decision.

B. Contract Requirement
The bidder to whom award is made shall execute a written Contract with the Village after notice of award. The Contract shall be made in the form adopted by the Village Attorney and a draft is included in this Request.

C. Insurance Requirements
The bidder shall provide proof of insurance in the form, coverages and amounts specified in 3.14 of these specifications within ten (10) calendar days after notice of Contract award as a precondition to Contract execution.

D. Business License & Tax
The bidder must have a valid Florida issued business license and tax certificate before execution of the Contract.

E. Failure to Accept Contract

The following will occur if the bidder to whom the award is made fails to enter into the Contract: the award will be annulled; any bid security will be forfeited in accordance with the special terms and conditions if a bidder's bond or security is required; and an award may be made to the next highest ranked bidder with a responsible compensation is negotiated, who shall fulfill every stipulation as if it were the party to whom the first award was made.

F. Completion of Contract

The Contract term commences after the Contract has been fully executed and the completion date is determined after all the scope of the project and the Bid Form have been completed.

SECTION 8.0: Required Bid Submittal Forms

DRUG-FREE WORKPLACE CERTIFICATION

In order to have a drug-free workplace program, a business shall:

1) Publish a statement notifying employees that the unlawful manufacture, distribution, dispensing, possession, or use of a controlled substance is prohibited in the workplace and specifying the actions that will be taken against employees for violations of such prohibition.
2) Inform employees about the dangers of drug abuse in the workplace, the business' policy of maintaining a drug-free workplace, any available drug counseling, rehabilitation, and employee assistance programs, and the penalties that may be imposed upon employees for drug abuse violations.
3) Give each employee engaged in providing the commodities or contractual services that are under proposal a copy of the statement specified in Subsection (1).
4) In the statement specified in Subsection (1), notify the employees, that, as a condition of working of the commodities or contractual services that are under proposal, the employee will abide by the terms of the statement and will notify the employee of any conviction of, or plea of guilty or nolo contendere to, any violation of Chapter 893 or of any controlled substance law of the United States or any state, for a violation occurring in the workplace no later than five (5) days after such conviction.
5) Impose a sanction on, or require the satisfactory participation in a drug abuse assistance or rehabilitation program, if such is available in the employee's community, by any employee who is so convicted.
6) Make a good faith effort to continue to maintain a drug-free workplace through implementation of this section.

As the person authorized to sign the statement, I certify that this Company complies fully with the above requirements.

Signature of Official: _____

Name (typed): Garrett Hardie

Title: Vice President

Company: Hartec Group Inc.

Date: 2/5/26

SUBCONTRACTOR LIST

The Company shall list all proposed Subcontractors to be used on this project if they are awarded the Contract.

Classification of Work	Subcontractor Name	Address	Telephone and Fax
NONE	NONE	NONE	NONE
See attached			

HARTEC GROUP

General Construction | Total Land Development |Construction Management
Licensed & Insured CGC # 1517053

Village of Pinecrest
Contact person: Eduardo Pozas
Phone: 305-234-2121
Email: epozas@pinecrest-fl.gov
Project #2024-024
Prime Contractor
Drainage Improvements
Duration of work: New
Year: 2025
Amount: $97,000.00

Town of Miami Lakes
Contact person: Anaily Padron
Phone: 305-364-6100
Email: padrona@miamilakes-fl.gov
Project - Sevilla Phase I
Prime Contractor
Drainage Improvements
Duration of work: Ongoing
Year: 2025
Amount: $2,087,490.00

Village of Palmetto Bay
Contact person: Dionisio Torres
Phone: 305-969-5086
Email: dtorres@palmettobay-fl.gov
Project#2024-11-022 (Sub Basin 44)
Prime Contractor
Drainage Improvements
Duration of work: Ongoing
Year: 2025
Amount: $1,350,000.00

Village of Palmetto Bay
Contact person: Dionisio Torres
Phone: 305-969-5086
Email: dtorres@palmettobay-fl.gov
Project#2024-11-003 (Sub Basin 57/96)
Prime Contractor
Drainage Improvements
Duration of work: Ongoing
Year: 2024
Amount: $ 1,577,994.35

Miami-Dade County
Contact person: Humberto Contreras
Phone: 305-514-6673
Email: humberto.contreras@miamidade.gov
MDC Project- EV Station
Duration of work: Completed
Year: 2024
Amount: $93,396.00

Miami-Dade County
Contact person: Williams Garcia
Email: willg@miamidade.gov
MDC Project- 18389-22
North Dade Scale House
Prime Contractor
Duration of work: Completed
Year: 2023
Amount: $526,655.00

Town of Miami Lakes
Contact person: Stanley Marentus
Phone: 305-364-6100
Email: marentuss@miamilakes-fl.gov
Project- Royal Pointe NW 158th Terrace
Project # 2023-025
Prime Contractor
Drainage Improvements
Duration of work: Completed
Year: 2023
Amount: $693,390.00

Miami-Dade County
Contact person: Felipe Monteagudo
Phone: 305-588-7676
Email: fmonte@miamidade.gov
MDC Project# 20220158
Prime Contractor
Drainage Improvements
Duration of work: Completed
Year: 2022
Amount: $1,039,925.14



General Construction | Total Land Development |Construction Management
Licensed & Insured CGC # 1517053

Miami-Dade County
Contact person: Licet Izquierdo
Phone: 305-375-2548
Email: Licet.Izquierdo@miamidade.gov
MDC Project# 20220049
Prime Contractor
Drainage Improvements
Duration of work: Completed
Year: 2022
Amount: $733,040.26

Miami-Dade County
Contact person: Guillermo Paneque
Phone: 305-596-8614
Email: guillermo.paneque@miamidade.gov
MDC Project# 202201401241
Prime Contractor
South Dade Government Center
Conduit project
Duration of work: Completed
Year: 2023
Amount: $297,254.99

Village of Palmetto Bay
Contact person: Dionisio Torres
Phone: 305-969-5086
Email: dtorres@palmettobay-fl.gov
Project#2022-11-004
Prime Contractor
Drainage
Duration of work: Completed
Year: 2022
Amount: $ 749,661.06

Miami-Dade County
Contact person: Marny Pereda
Phone: 305-755-7815
Email: marny.pereda@miamidade.gov
MDC Project#12320313003
Ives Estates Park
Prime Contractor
Duration of work: Completed
Year: 2022
Amount: $993,886.82

True North Academy
Contact person: David Britez
Phone: 786-429-3565
Email: david@lucasdavidlandscape.com
Prime Contractor
Drainage
Duration of work: Completed
Year: 2022
Amount: $ 89,940.00

City of South Miami
Contact person: Aurelio Carmenantes
Phone: 305-403-2072
Email: acarmenantes@southmiamifl.gov
Project# Drainage SW 62nd PL- SW 58-60 St
Prime Contractor
Drainage
Duration of work: Completed
Year: 2022
Amount: $252,480.62

Banyan Elementary School
Contact person: Howard Diston
Phone: 305-335-3922
Email: d2con@comcast.net
Project# Interior demolition, drywall, masonry & concrete
Prime Contractor
Drainage
Duration of work: Completed
Year: 2022
Amount: $463,425.00

Miami Dade County
Contact Person: Alfonzo Duarte, Miami Dade County
Miami Dade County
Prime Contractor
Drainage
Duration of work: on- going
Year: 2020
Amount: $788,960.00



General Construction | Total Land Development |Construction Management
Licensed & Insured CGC # 1517053

Miami Dade County
Contact Person: Pedro Marsan
Prime Contractor
Drainage
Duration of work: on- going
Year: 2019
Amount: $990,000

Miami Dade County
Contact Person: Jose Gutierrez, Miami Dade County
Miami Dade County
Prime Contractor
Drainage
Duration of work: 270
Year: 2018
Amount: $6706,849.00

Miami Dade County
Contact Person: Alfonzo Duarte, Miami Dade County
Miami Dade County
Prime Contractor
Drainage
Duration of work: 365
Year: 2019
Amount: $835,093.00

Miami Dade County
Contact Person: Duane Kopp, Miami Dade County
Miami Dade County, PROS
Prime Contractor
Bathroom Renovation
Duration of work: 365
Year: 2018
Amount: $162,000.00

Miami Dade County
Contact Person: Silvia Perez, Miami Dade County
Miami Dade County
Prime Contractor
Drainage
Duration of work: 240
Year: 2018
Amount: $360,450.24

Miami Dade County
Contact Person: Tony Moreno, Miami Dade County
Miami Dade County
Prime Contractor
Drainage
Duration of work: 240
Year: 2018
Amount: $633,335.36

REFERENCES

Each bid must be accompanied by a list of at least ***three (3)*** references from current customers, preferably in the public sector, which shall include all the information requested below. **The Village should not be listed as one of the references provided.**

VILLAGE OF PALMETTO BAY - REFERENCE FORM

Solicitation Information: SW 82nd Bike Lanes Improvements
Invitation to Bid No. 2026-11-002

Name of Company: Hartec Group Inc.

To Whom it May Concern,
The above reference vendor is submitting on a proposal solicitation or use of bid that has been issued by the Village of Palmetto Bay. We require that the consultant provide written references with their proposal submission and by providing you with this document the vendor is requesting that you provide the following reference information. We would appreciate you providing the information requested below as well as any other information you feel is pertinent:

Contracted Services Information:

Scope of Work: General Construction

Initial Value of Contract: 449,438.00 Final Value of Contract: 525,596.00

Length of Contract: 1 year

Would you enter into a contract with the Company in the future? X Yes _____ No

Were the services provided acceptable and of quality standards: X Yes _____ No

Was the Company responsive to your requests and resourceful with the task? X Yes _____ No

Did the Company keep you fully informed of any updates and/or concerns related to the contracted services?

X Yes _____ No

If you responded no to any of the above please provide details:

Comments:

Name of Public Entity/Company: Miami Dade County

Name of Individual completing this form: Williams Garcia

Signature: Digitally signed by WILLIAMS GARCIA, P.E. Date: 2026.02.04 11:52:38 -05'00' Title: Electrical Engineer

Telephone: 305 - 514 - 6058 Email: williams.garcia@miamidade.gov

Thank you for your support in helping us evaluate our solicitation responses.

Sincerely,
Alessia Bencomo, Procurement Specialist

ACKNOWLEDGEMENT, WARRANTY AND ACCEPTANCE

A. Company warrants that it is willing and able to comply with all applicable Village laws, rules and regulations.

B. Company warrants that they have read, understand and are willing to comply with all of the requirements of the ITB and the addendum/ addenda nos.

C. Company warrants that it will not delegate or sub-contract its responsibilities under an agreement without the prior written permission of the Council.

D. Company warrants that all information provided by it in connection with this bid is true and accurate.

E. CONTINGENCY FEE AND CODE OF ETHICS WARRANTY:

Company warrants that neither it, nor any principal, employee, agent, representative or family member has promised to pay, and Company has not, and will not, pay a fee for the amount of which is contingent upon the Village awarding this contract. Company warrants that neither it, nor any principal, employee, agent, representative has procured, or attempted to procure, this contract in violation of any of the provisions of the Village conflict of interest and code of ethics ordinances. Further, Company acknowledges that a violation of this warranty will result in the termination of the contract and forfeiture of funds paid, or to be paid, to the Company, if the Company is chosen for performance of the contract.

Signature of Official: _____

Name (typed): Garrett Hardie

Title: Vice President

Company: Hartec Group Inc.

Date: 2/5/26

NON-COLLUSIVE AFFIDAVIT

STATE OF FLORIDA }
} ss.:
COUNTY OF MIAMI-DADE }

Garrett Hardie being first duly sworn, deposes and says that:

(1) He/she is the, (Owner, Partner, Officer, Representative or Agent) of: Hartec Group Inc. _____, the Company that has submitted the attached Bid;

(2) He/she is fully informed respecting the preparation and contents of the attached Bid and of all pertinent circumstances respecting such Bid;

(3) Such Bid is genuine and is not a collusive or a sham Bid;

(4) Neither the said Company nor any of its officers, partners, owners, agents, representatives, employees or parties in interest, including this affiant, have in any way colluded, conspired, connived or agreed, directly or indirectly, with any other Company or person to submit a collusive or sham response in connection with the work for which the attached bid has been submitted, or to refrain from responding in connection with such work, or have in any manner, directly or indirectly, sought by agreement or collusion, communication, or conference with any Company or person to fix this Bid or to secure through any collusion, conspiracy, connivance, or unlawful agreement, any advantage against the Village of Palmetto Bay, or any person interested in the proposed Work;

Signed, sealed and delivered
In the presence of

Signature of Official: _____

Name (typed): Garrett Hardie

Title: Vice President

Company: Hartec Group Inc

Date: 2/5/26

Continued Next Page

ACKNOWLEDGMENT

State of Florida)
) ss.:
County of Miami - Dade)

The foregoing instrument was acknowledged before me **by means of** ✓ **physical presence or** _ **online notarization**, this 5th day of February, 2026, by Garrett Hardie. He/She was ✓ personally known, _____ or produced _____ as a form of identification.

WITNESS my hand and official seal

Notary Public State of Florida
Suzanne Delgado
My Commission HH 671306
Expires 4/30/2029

NOTARY PUBLIC, STATE OF FLORIDA

SWORN STATEMENT PURSUANT TO SECTION 287.133 (3)(a) FLORIDA STATUES, ON PUBLIC ENTITY CRIMES

THIS FORM MUST BE SIGNED AND SWORN TO IN THE PRESENCE OF A NOTARY PUBLIC OR OTHER OFFICIAL AUTHORIZED TO ADMINISTER OATHS.

1. This sworn statement is submitted to the Village of Palmetto Bay, Florida

By Garrett Hardie

For Hartec Group Inc

Whose business address is: 8200 SW 187th Terr. Cutler Bay, FL 33157

And (if applicable) its Federal Employer Identification Number (FEIN) is: 26-4325232

2. I understand that a "public entity crime" as defined In Paragraph 287.133(1)(g), Florida Statutes ,and as may be amended means a violation of any state or federal law by a person with respect to and directly related to the transaction of business with any public entity or with any agency or political subdivision of any other State or of the United States, including, but not limited to, any Proposal or contract for goods or services to be provided to any public entity or an agency or any political subdivision of any other state or of the United Sates and involving antitrust fraud, theft, bribery, collusion, racketeering, conspiracy, or material misrepresentation

3. I understand that "convicted" or "conviction"" as defined in Paragraph 287.133(1)(b), Florida Statutes means a finding of guilt or a conviction of a public entity crime, with or without an adjudication of guilt, in any federal or state trial court of record relating to charges brought by indictment or information after July 1, 1989, as a result or a jury verdict, non-jury trial, or entry of a plea or guilty or nab contenders.

4. I understand that an "affiliate" as defined in Paragraph 287.133(1)(a), Florida Statutes, and means:

A. A predecessor or successor of a person convicted of a public entity crime; or
B. An entity under the control of any natural person who is active in the management of the entity and who has been convicted of a public entity crime. The term "affiliate"' includes those officers, directors, executives, partners, shareholders, employees, members, and agents who are active in the management of an affiliate. The ownership by one person of shares constituting a controlling Interest in another person, ore pooling of equipment or income among persons when not for fair market value under an arm's length agreement, shall be a prima facie case that one person controls another person. A person who knowingly enters

into a joint venture with a person who has been convicted of a public entity crime in Florida during the preceding 36 months shall be considered an affiliate.

5. I understand that a "person" as defined in Paragraph 287.133(1)(e), Florida Statutes, means any natural person or entity organized under the laws or any state or of the United States with the legal power to enter into a binding contract and which Bids or applies to Bids on contracts for the provision of goods or services let by a public entity, or which otherwise transacts or applies to transact business with a public entity. The term "person" includes those officers, directors, executives, partners, shareholders, employees, members, and agents who are active in management of any entity.

Signed, sealed and delivered in the presence:

Signature of Official: _____

Name (typed): Garrett Hardie

Title: Vice President

Company: Hartec Group Inc.

Date: 02 - 05 - 26

ACKNOWLEDGMENT

State of Florida)
) ss.:
County of Miami - Dade)

The foregoing instrument was acknowledged before me **by means of** X **physical presence or** _ **online notarization**, this 5th day of February, 2026, by Garret Hardie. He/She was X personally known, _____ or produced _____ as a form of identification.

WITNESS my hand and official seal

Notary Public State of Florida
Suzanne Delgado
My Commission HH 671306
Expires 4/30/2029

_____
NOTARY PUBLIC, STATE OF FLORIDA

AMERICANS WITH DISABILITIES ACT (ADA)
DISABILITY NONDISCRIMINATION STATEMENT

THIS FORM MUST BE SIGNED AND SWORN TO IN THE PRESENCE OF A NOTARY PUBLIC OR OTHER OFFICIAL AUTHORIZED TO ADMINISTER OATHS.

This sworn statement is submitted to the VILLAGE OF PALMETTO BAY, FLORIDA

by: Garrett Hardie , Vice President

(print individual's name and title)

for: Hartec Group Inc.

(print name of entity submitting sworn statement)

whose business address is: 8200 SW 187 Terr Cutler bay FL 33157 United States

and (if applicable) its Federal Employer Identification Number (FEIN) is: 26-4325232

I, being duly first sworn state: That the above named Company, corporation or organization is in compliance with and agreed to continue to comply with, and assure that any sub-contractor, or third party contractor under this project complies with all applicable requirements of the laws listed below including, but not limited to, those provisions pertaining to employment, provision of programs and services, transportation, communications, access to facilities, renovations, and new construction.

The American with Disabilities Act of 1990 (ADA), Pub. L. 101-336, 104 Stat 327, 42 USC 1210112213 and 47 USC Sections 225 and 661 including Title I, Employment; Title II, Public Services; Title III, Public Accommodations and Services Operated by Private entities; Title IV, Telecommunications; and Title V, Miscellaneous Provisions, and as any may be amended.

The Florida Americans with Disabilities Accessibility Implementation Act of 1993, Section 553.501-553.513, Florida Statutes:
The Rehabilitation Act of 1973, 229 USC Section 794;
The Federal Transit Act, as amended 49 USC Section 1612;
The Fair Housing Act as amended 42 USC Section 3601-3631.

Signature of Official: 

Name (typed): Garrett Hardie

Title: Vice President

Company: Hartec Group Inc.

Date: 2/5/26

Continued Next Page

ACKNOWLEDGMENT

State of Florida)
) ss.:
County of Miami - Dade)

The foregoing instrument was acknowledged before me **by means of** X **physical presence or** _ **online notarization**, this 5th day of February, 2026, by Garret Hardie. He/She was X personally known, _____ or produced _____ as a form of identification.

WITNESS my hand and official seal

Notary Public State of Florida
Suzanne Delgado
My Commission HH 671306
Expires 4/30/2029

NOTARY PUBLIC, STATE OF FLORIDA

BUSINESS ENTITY AFFIDAVIT

Bidder or Company hereby recognizes and certifies that no elected official, or employee of the Village of Palmetto Bay (the "Village") shall have a financial interest directly or indirectly in this transaction or any compensation to be paid under or through this transaction, and further, that no Village employee, nor any elected or appointed officer (including Village board members) of the Village, nor any spouse, parent or child of such employee or elected or appointed officer of the Village, may be a partner, officer, director or proprietor of Bidder or Company, and further, that no such Village employee or elected or appointed officer, or the spouse, parent or child of any of them, alone or in combination, may have a material interest in the Company or Bidder. Material interest means direct or indirect ownership of more than five percent (5%) of the total assets or capital stock of the Company or Bidder. Any exception to these above-described restrictions must be expressly provided by applicable law or ordinance and be confirmed in writing by Village. Further, Bidder or Company recognizes that with respect to this transaction or bid, if any Bidder or Company violates or is a party to a violation of the ethics ordinances or rules of the Village, the provisions of Miami-Dade County Code Section 2-11.1, as applicable to Village, Village Charter Section 7.6 (Lobbyist), or the provisions of Chapter 112, part III, Fla. Stat., the Code of Ethics for Public Officers and Employees and as may be amended, such Bidder or Company may be disqualified from furnishing the goods or services for which the bid or proposal is submitted and may be further disqualified from submitting any future bids or proposals for goods or services to Village.

Accordingly, Bidder or Company completes and executes the Business Entity Affidavit form below. The terms "Bidder" or "Company," as used herein, include any person or entity making a bid proposal herein to Village or providing goods or services to Village.

I, Garret Hardie being first duly sworn state:

The full legal name and business address of the person(s) or entity contracting or transacting business with the Village of Palmetto Bay ("Village") are (Post Office addresses are not acceptable), as follows:

26-4325232

Federal Employer Identification Number (If none, Social Security Number)

Hartec Group Inc.

Name of Entity, Individual, Partners or Corporation

Doing Business As (If same as above, leave blank)

8200 SW 187 Terr Cutler bay FL 33157 United States

Street Address Suite Village State Zip Code

Continued Next Page

OWNERSHIP DISCLOSURE AFFIDAVIT

1. If the contact or business transaction is with a corporation, the full legal name and business address shall be provided for each officer and director and each stockholder who holds directly or indirectly five percent (5%) or more of the corporation's stock. If the contract or business transaction is with a trust, the full legal name and address shall be provided for each trustee and each beneficiary. All such names and addresses are (Post Office addresses are not acceptable), as follows:

Full Legal Name	Address	Ownership
Maurice Hardie	8200 sw 187 terr, Cutler bay Fl, 33157	90 %
Garret Hardie.	15840 sw 148 terr Miami Fl, 33196	10 %
		%

2. The full legal names and business address of any other individual (other than sub-contractors, material men, suppliers, laborers, or lenders) who have, or will have, any interest (legal, equitable, beneficial or otherwise) in the contract or business transaction with the Village are (Post Office addresses are not acceptable), as follows:

n/a

Signature of Official: _____

Name (typed): Garrett Hardie

Title: Vice President

Company: Hartec Group Inc.

Date: 2/5/26

Continued Next Page

ACKNOWLEDGMENT

State of Florida)
) ss.:
County of Miami - Dade)

The foregoing instrument was acknowledged before me **by means of** X **physical presence or** _ **online notarization**, this 5th day of February, 2026, by Garret Hardie. He/She was ✓ personally known, _____ or produced _____ as a form of identification.

WITNESS my hand and official seal

_____
NOTARY PUBLIC, STATE OF FLORIDA

Notary Public State of Florida
Suzanne Delgado
My Commission HH 671306
Expires 4/30/2029

ACKNOWLEDGMENT OF CONFORMANCE WITH OSHA STANDARDS

To the Village of Palmetto Bay,

We Hartec Group Inc. Bidder, Proposer, or Company, hereby acknowledge and agree that we, as the Prime Company for Village of Palmetto Bay, Village of Palmetto Bay SW 82nd Bike Lanes, ITB# 2026-11-002, as specified, have the sole responsibility for compliance with all the requirements of the Federal Occupational Safety and Health Act of 1970 and as may be amended, and all State and local safety and health regulations, and agree to indemnify and hold harmless the Village of Palmetto Bay, against any and all liability, claims, damages losses and expenses they may incur due to the failure of : _____

_____

(Sub-Contractor's Names) to comply with such act or regulation.

Signature of Official: _____

Name (typed): Garrett Hardie

Title: Vice President

Company: Hartec Group Inc.

Date: 2/5/26

ACKNOWLEDGMENT

State of Florida)
) ss.:
County of Miami - Dade)

The foregoing instrument was acknowledged before me **by means of** Y **physical presence or** _ **online notarization**, this 5th day of February, 2026, by Garrett Hardie. He/She was X personally known, _____ or produced _____ as a form of identification.

WITNESS my hand and official seal

_____

NOTARY PUBLIC, STATE OF FLORIDA

Notary Public State of Florida
Suzanne Delgado
My Commission HH 671306
Expires 4/30/2029

VILLAGE OF PALMETTO BAY
ANTI-KICKBACK AFFIDAVIT

STATE OF FLORIDA)
) ss.:
COUNTY OF Miami Dade)

I, the undersigned, hereby duly sworn, depose and say that no portion of the sum herein bid will be paid to any employees of the Village of Palmetto Bay, its elected officials, and Hartec Group Inc. _____ or its employees, as a commission, kickback, reward or gift, directly or indirectly by me or any member of my Company or by an officer of the corporation.

Signature of Official: _____

Name (typed): Garrett Hardie

Title: Vice President

Company: Hartec Group Inc.

Date: 2/5/26

ACKNOWLEDGMENT

State of Florida)
) ss.:
County of Miami Dade)

The foregoing instrument was acknowledged before me **by means of** X **physical presence or** _ **online notarization**, this 5th day of February, 2026, by Garrett Hardie. He/She was X personally known, _____ or produced _____ as a form of identification.

WITNESS my hand and official seal

_____
NOTARY PUBLIC, STATE OF FLORIDA

Notary Public State of Florida
Suzanne Delgado
My Commission HH 671306
Expires 4/30/2029

STATEMENT OF PAST CONTRACT DISQUALIFICATIONS

The Bidder, Proposer, or Company shall state whether it or any of its officers or employees who have a proprietary interest in it, has ever been disqualified, removed, or otherwise prevented from bidding on, or completing a federal, state, or local government project because of the violation of law, a safety regulation, or for any other reason, including but not limited to financial difficulties, project delays, or disputes regarding work or product quality, and if so to explain the circumstances.

Do you have any disqualification as described in the above paragraph to declare?

Yes or No, If yes, explain the circumstances.

NO

Executed on February 5th, 2026 at 9:00am
under penalty of perjury of the laws of the State of Florida, that the foregoing is true and correct.

Signature of Official: _____

Name (typed): Garret Hardie

Title: Vice President

Company: Hartec Group Inc

Date: 2/5/26

E-VERIFY AFFIDAVIT

STATE OF Florida

COUNTY OF Miaml Dade

I, Garrett Hardie (the individual attesting below), being duly authorized byand on behalf of Hartec Group Inc. (hereinafter "Employer") after firstbeing duly sworn hereby swears or affirms as follows:

1. Employer understands that E-Verify is the federal E-Verify program operated by the United States Department of Homeland Security and other federal agencies, or any successor or equivalent programused to verify the work authorization of newly hired employees pursuant to federal law in accordancewith NCGS §64-25(5), and as the same may be amended.
2. Employer understands that Employers Must Use E-Verify. Each employer, after hiring an employee towork in the United States, shall verify the work authorization of the employee through E-Verify in accordance with NCGS §64-26(a), and as the same may be amended.
3. Employer's subcontractors will comply with E-Verify, and Employer will ensure compliance with E-Verifyby any and all subcontractors subsequently hired by Employer.

This 5th day of Fabruary, 2026.

Signature of Affiant

Print or Type Name: Garrett Hardie

State of Florida)
) ss.:
County of Miami - Dade)

The foregoing instrument was acknowledged before me **by means of** X **physical presence or** _ **online notarization**, this 5th day of February, 2026, by Garrett Hardie.
He/She was X personally known, _____ or produced _____ as a form of identification.

Notary Public State of Florida
Suzanne Delgado
My Commission HH 671306
Expires 4/30/2029

Signed and sworn to (or affirmed) before me,

this the 5th day of February, 2026.

My Commission Expires: _____

_____

Notary Public

NHCS – E-Verify 081815

Foreign Country of Concern Attestation

Capitalized terms used herein have the definitions ascribed in section 287.138, F.S.

Name of Company is not owned by the government of a Foreign Country of Concern, is not organized under the laws of nor has its principal place of business in a Foreign Country of Concern, and the government of a Foreign Country of Concern does not have a Controlling Interest (twenty five percent (25%) or more) in the Company.

Under penalties of perjury, I declare that I have read the forgoing statement and that the facts stated in it are true.

Printed Name: Garrett Hardie

Title: Vice President

Signature:  Date: 2/5/26

Affidavit Attesting to Noncoercive Conduct for Labor or Services

Nongovernment Entity name: Hartec Group Inc. ("**Company**")

Vendor FEIN: _____

Address: 8200 SW 187 Terr

City: Cutler bay State: FL Zip: 33157

Phone number: 786 - 471 - 4294 Email Address: hartecgroupinc@gmail.com

As a nongovernmental entity executing, renewing, or extending a contract with a government entity, **Company** is required to provide an affidavit under penalty of perjury attesting that **Company** does not use coercion for labor or services in accordance with Section 787.06, Florida Statutes.

As defined in Section 787.06(2)(a), coercion means:

1. Using or threating to use physical force against any person;
2. Restraining, isolating, or confining or threating to restrain, isolate, or confine any person without lawful authority and against her or his will;
3. Using lending or other credit methods to establish a debt by any person when labor or services are pledged as a security for the debt, if the value of the labor or services as reasonably assessed is not applied toward the liquidation of the debt, the length and nature of the labor or service are not respectively limited and defined;
4. Destroying, concealing, removing, confiscating, withholding, or possessing any actual or purported passport, visa, or other immigration document, or any other actual or purported government identification document, of any person;
5. Causing or threating to cause financial harm to any person;
6. Enticing or luring any person by fraud or deceit; or
7. Providing a controlled substance as outlined in Schedule I or Schedule II of Section 893.03 to any person for the purpose of exploitation of that person.

As a person authorized to sign on behalf of the **Company**, I certify that the **Company** does not use coercion for labor or services in accordance with Section 787.06.

Written Declaration

Under penalties of perjury, I declare that I have read the foregoing Affidavit and that the facts stated in it are true.

Printed Name: Garrett Hardie

Title: Vice President

Signature: _____

Date: 2/5/26

Form **W-9**
(Rev. August 2013)
Department of the Treasury
Internal Revenue Service

Request for Taxpayer Identification Number and Certification

Give Form to the requester. Do not send to the IRS.

Print or type
See Specific Instructions on page 2.

Name (as shown on your income tax return)

Business name/disregarded entity name, if different from above
Hartec Group Inc.

Check appropriate box for federal tax classification:
☐ Individual/sole proprietor ☐ C Corporation ☒ S Corporation ☐ Partnership ☐ Trust/estate

☐ Limited liability company. Enter the tax classification (C=C corporation, S=S corporation, P=partnership) ▶

☐ Other (see instructions) ▶

Exemptions (see instructions):
Exempt payee code (if any)
Exemption from FATCA reporting code (if any)

Address (number, street, and apt. or suite no.)
8200 SW 187 Ter.

Requester's name and address (optional)

City, state, and ZIP code
Cutler Bay, FL 33157

List account number(s) here (optional)

Part I Taxpayer Identification Number (TIN)

Enter your TIN in the appropriate box. The TIN provided must match the name given on the "Name" line to avoid backup withholding. For individuals, this is your social security number (SSN). However, for a resident alien, sole proprietor, or disregarded entity, see the Part I instructions on page 3. For other entities, it is your employer identification number (EIN). If you do not have a number, see *How to get a TIN* on page 3.

Note. If the account is in more than one name, see the chart on page 4 for guidelines on whose number to enter.

Social security number
___ - ___ - ____

Employer identification number
26 - 4326232

Part II Certification

Under penalties of perjury, I certify that:

1. The number shown on this form is my correct taxpayer identification number (or I am waiting for a number to be issued to me), and
2. I am not subject to backup withholding because: (a) I am exempt from backup withholding, or (b) I have not been notified by the Internal Revenue Service (IRS) that I am subject to backup withholding as a result of a failure to report all interest or dividends, or (c) the IRS has notified me that I am no longer subject to backup withholding, and
3. I am a U.S. citizen or other U.S. person (defined below), and
4. The FATCA code(s) entered on this form (if any) indicating that I am exempt from FATCA reporting is correct.

Certification instructions. You must cross out item 2 above if you have been notified by the IRS that you are currently subject to backup withholding because you have failed to report all interest and dividends on your tax return. For real estate transactions, item 2 does not apply. For mortgage interest paid, acquisition or abandonment of secured property, cancellation of debt, contributions to an individual retirement arrangement (IRA), and generally, payments other than interest and dividends, you are not required to sign the certification, but you must provide your correct TIN. See the instructions on page 3.

Sign Here Signature of U.S. person ▶ [signature] Date ▶ 2/4/26

General Instructions

Section references are to the Internal Revenue Code unless otherwise noted.

Future developments. The IRS has created a page on IRS.gov for information about Form W-9, at *www.irs.gov/w9*. Information about any future developments affecting Form W-9 (such as legislation enacted after we release it) will be posted on that page.

Purpose of Form

A person who is required to file an information return with the IRS must obtain your correct taxpayer identification number (TIN) to report, for example, income paid to you, payments made to you in settlement of payment card and third party network transactions, real estate transactions, mortgage interest you paid, acquisition or abandonment of secured property, cancellation of debt, or contributions you made to an IRA.

Use Form W-9 only if you are a U.S. person (including a resident alien), to provide your correct TIN to the person requesting it (the requester) and, when applicable, to:

1. Certify that the TIN you are giving is correct (or you are waiting for a number to be issued),
2. Certify that you are not subject to backup withholding, or
3. Claim exemption from backup withholding if you are a U.S. exempt payee. If applicable, you are also certifying that as a U.S. person, your allocable share of any partnership income from a U.S. trade or business is not subject to the withholding tax on foreign partners' share of effectively connected income, and
4. Certify that FATCA code(s) entered on this form (if any) indicating that you are exempt from the FATCA reporting, is correct.

Note. If you are a U.S. person and a requester gives you a form other than Form W-9 to request your TIN, you must use the requester's form if it is substantially similar to this Form W-9.

Definition of a U.S. person. For federal tax purposes, you are considered a U.S. person if you are:

- An individual who is a U.S. citizen or U.S. resident alien,
- A partnership, corporation, company, or association created or organized in the United States or under the laws of the United States,
- An estate (other than a foreign estate), or
- A domestic trust (as defined in Regulations section 301.7701-7).

Special rules for partnerships. Partnerships that conduct a trade or business in the United States are generally required to pay a withholding tax under section 1446 on any foreign partners' share of effectively connected taxable income from such business. Further, in certain cases where a Form W-9 has not been received, the rules under section 1446 require a partnership to presume that a partner is a foreign person, and pay the section 1446 withholding tax. Therefore, if you are a U.S. person that is a partner in a partnership conducting a trade or business in the United States, provide Form W-9 to the partnership to establish your U.S. status and avoid section 1446 withholding on your share of partnership income.

ADDENDUM NO. 1

Date: February 2nd, 2026

To: All Interested Parties

From: Alessia Bencomo, Procurement Specialist
Village of Palmetto Bay
9705 E. Hibiscus Street
Palmetto Bay, Florida 33157

Re: Invitation to Bid No. 2026-11-002
SW 82nd Bike Lanes Improvements

This Addendum forms part of the Invitation to Bid (ITB) Package advertised on January 20th, 2026, and with a bid opening date of February 5th, 2026, with any amendments and/or additions noted below.

Question No. 1: When you have a chance can you send me the spec documents for this bid?

Response: *All documents can be found at SW 82nd Bike Lanes - DemandStar.*

Question No. 2: The plans for the bid mentioned above are not legible when I zoom in. Can we get a better copy? Or can I borrow the original set to have it scanned at a print shop?

Response: *Please be advised that I have uploaded another version of the engineering plans to OpenBids-DemandStar.*

Question No. 3: What is the budget or engineers estimate?

Response: *The Engineer's probable cost for this project is Two Hundred Eighty-Five Thousand Four Hundred Fifty Dollars and Zero Cents ($285,450.00) with a ten percent (10%) contingency included.*

Question No. 4: Do you have the bid docs for this opportunity? SW 82nd Bike Lanes.

Response: *Please be advised that I have uploaded another version of the engineering plans to OpenBids-DemandStar.*

Question No. 5: What is the engineer's estimate for the above-referenced project?

Response: *The Engineer's probable cost for this project is Two Hundred Eighty-Five Thousand Four Hundred Fifty Dollars and Zero Cents ($285,450.00) with a ten percent (10%) contingency included.*

Question No. 6: I would like to inquire about the licensing requirements for bidding on this project. Will an Underground Utilities & Excavation License from the state of Florida & Miami Dade County Paving Engineering Certificate of Competency meet the required qualifications?

Response: *Yes, this license would qualify for the scope of work on this project.*

Question No. 7: What is the size of the ADA Accessible Catch Basin Grate?

Response: *Please be advised that the bidder is recommended/suggested to evaluate the size as part of the bidder's due diligence/field assessment.*

Question No. 8: What is the estimated contract duration (number of calendar days) for the above-referenced project?

Response: *Six (6) months from Notice to Proceed (NTP).*

Question No. 9: Is there a possibility to close SW 82nd?

Response: *Daily closures in one direction will be allowed outside of peak times. MOT needs to be submitted for review.*

Question No. 10: Should the bike lanes be preformed or painted?

Response: *The bike lane markings need to follow FDOT Index 771-002, which specifies preformed thermoplastic.*

Question No. 11: In regards to the green bike lane, can FDOT approved green paint be used or do you require the installation of preform? If preform is required are there any specifications? (e.i Glass bead reflection)

Response: *The bike lane markings need to follow FDOT Index 771-002, which specifies preformed thermoplastic.*

Question No. 12: Do paver driveways need to be completely restored with new pavers or can we preserve existing pavers and reset?

Response: *Preserving existing pavers is allowed.*

Question No. 13: Do you have a designated staging area?

Response: *Proposed staging area should be provided with MOT submittal for our review.*

Question No. 14: Do we have to pay for permit fees?

Response: *Any permit fees paid will be reimbursed by the Village.*

Question No. 15: Will a certified arborist be needed to specify root pruning as roots encroach in the work limit area?

Response: *The Village has a certified arborist that will assist.*

Thank you,

A Bencomo

Alessia Bencomo
Procurement Specialist

ACKNOWLEDGEMENT OF ADDENDUM SOLICITATION

Amendment/Modification No: 1

Amendment of ITB No: 2026-11-002

Title: SW 82nd Bike Lanes Improvements

Name of Contractor Hartec Group Inc.

Date Addendum Received 1

Total Pages of Addendum including Acknowledgement 3

Print Name GARRET Hardie

Signature

All other terms and conditions stipulated in the original Village of Palmetto Bay Invitation to Bid shall remain in force. All addenda created will be incorporated into the final contract and must be acknowledged in all bids. This acknowledgement form must be included in the response and failure to sign and submit this form may result in rejection of your bid.

Invitation to Bid
Village of Palmetto Bay
9705 East Hibiscus Street
Palmetto Bay, Florida 33157

TITLE:

SW 82nd Bike Lanes Improvements

ITB NO.:

2026-11-002

DUE DATE:

Thursday, February 5th, 2026 on or before 11:00 a.m. EST (Municipal Building)

ISSUED: Tuesday, January 20th, 2026

CONTACT PERSON:

Procurement Specialist
Alessia Bencomo
Finance Department – Procurement Division
abencomo@palmettobay-fl.gov

4.1:
BID FORM

The following Bid Form is presented to assist the Village in evaluating the bid. This Bid Form reflects estimated quantities for the Total Bid as described above. After award, the Village reserves the right to modify estimated quantities subject to the unit price and eliminate line items if necessary. Payment shall be made for the items listed on the Bid Form on the basis of the Work actually performed and completed.

Item No.	Description	Unit	Quantity	Unit Price	Total
1	Mobilization	LS	1	$ 40,000.00	$ 40,000.00
2	Maintenance of Traffic	LS	1	$ 15,000.00	$ 15,000.00
3	Storm Water Pollution Prevention Plan	LS	1	$ 12,000.00	$ 12,000.00
4	Site Restoration and Tie-In Grading	LS	1	$ 8,000.00	$ 8,000.00
5	Asphalt, SP-9.5, 1.5" Average Depth	SY	2200	$ 20.00	$ 44,000.00
6	Stabilized Subgrade, 12" Thick	SY	2200	$ 18.00	$ 39,600.00
7	Limerock Base, 8" Thick	SY	2200	$ 18.00	$ 39,600.00
8	Remove Existing Concrete, Asphalt, and Pavers	SY	930	$ 45.00	$ 41,850.00
9	ADA Accessible Catch Basin Grate	EA	1	$ 2,500.00	$ 2,500.00
10	Utility Fixture, Valve Assembly, Adjust/Modify	LS	1	$ 5,000.00	$ 5,000.00
11	Mailbox Relocation	EA	1	$ 1,600.00	$ 1,600.00
12	Sign Relocation	EA	2	$ 850.00	$ 1,700.00
13	Sign and Post	EA	6	$ 350.00	$ 2,100.00
14	Concrete Sidewalk (6" thick max) (Sidewalk, Driveway, and Apron)	SY	190	$ 75.00	$ 14,250.00
15	Paver Driveway Restoration	LS	1	$ 3,500.00	$ 3,500.00
16	Pavement Marking	LS	1	$ 70,000.00	$ 70,000.00
				GRAND TOTAL	$ 340,700.00

Refer to pay item notes within contract plans for details of costs to be included within items.

The following Bid Item Notes apply to the bid items:

1. Bid Item 1 is a lump sum pay item for all mobilization costs and includes the construction of two (2) project signs that shall be displayed at approaches to the project area. The intent is that the sign will be freestanding. The sign shall display on both sides the project name, Village Logo, elected officials, and contact information. A detail of the sign is included in the plans. Shop drawings must be submitted for approval prior to ordering the project sign. Photos of the actual project sign must be submitted for approval prior to installation of the project signs.

   Mobilization will be paid at the following rates:
   a. 10% of contract completion - 25% of Mobilization.
   b. 25% of contract completion - 50% of Mobilization.
   c. 50% of contract completion - 100% of Mobilization.

2. Bid Item 2 is a lump sum pay item for a Maintenance of Traffic (MOT) and includes all pedestrian access maintenance. All crosswalks and sidewalks shall remain open and free of obstructions. Temporary painting for roadways and crosswalks shall be maintained throughout the project. Costs shall include the use of flagmen. Contractor to prepare and submit for review a MOT Plan per phase of construction. The MOT plan shall be prepared by an FDOT certified individual. No work shall begin until the MOT plan has been approved by the Village.
3. Bid Item 3 to include a complete stormwater pollution prevention plan (SWPPP). Notice of Intent fees and compliance with any SWPPP reporting. Include furnishing, installation, maintenance, and removal of items. This is a lump sum pay item to furnish, install, maintain, and remove floating turbidity barriers.
4. Bid Item 4 is a lump sum pay item for site restoration which includes the complete restoration of the roadway or driveways impacted by any construction activity adjacent to the roadway resurfacing project including but not limited to mobilization, clearing, and grubbing, striping removal, milling and resurfacing, asphalt, limerock, and base removal, limerock rework, asphalt overlay, utility adjustments, mailbox relocations, etc. Any swale areas impacted by the contractor outside of those indicated on the plans will be restored by the contractor at no additional cost to the Village. The pay item includes but is not limited to sod, landscaping, trees, excavation, new fill, limerock base preparation, grading, tamping, irrigation, driveway aprons (asphalt, pavers, stamped concrete, etc.), sidewalks, mailboxes, fences, pipes, curbs, etc. to an equal or better condition prior to construction. The contractor shall include the costs associated with a preconstruction video to confirm existing conditions. Any damage not confirmed by preconstruction video will be repaired at no additional cost to the Village.
5. Bid Item 5 includes the asphalt final overlay to the extents shown on the plans or lift of asphalt (minimum 1.5") to final grade. Pavement overlay to provide smooth and continuous grading through the entire asphalt overlay process to avoid areas of standing water. This item also includes the final lift of asphalt over all trench restoration.
6. Bid Item 6 and 7 include all costs associated with the stabilized subgrade and limerock base.
7. Bid Item 8 includes all costs associated with removal and disposal of existing concrete, asphalt, and pavers and includes saw cutting.
8. Bid Items 9 includes all costs associated with the installation of ADA accessible catch basin grates.
9. Bid Item 10 includes all costs associated with valve adjustments.
10. Bid Item 11 includes all costs associated with the relocation of existing mailboxes as needed.
11. Bid Item 12 includes all costs associated with the relocation of existing signs.
12. Bid Item 13 includes all costs associated with new signs and their installation.
13. Bid Item 14 includes all costs associated with installing concrete pavements to include concrete sidewalks, driveways, and aprons up to 6" thick.
14. Bid Item 15 includes all costs associated with the restoration of paver driveways. Contractor is responsible of replacing pavers in the case that pavers break.
15. Bid Item 16 is a lump sum pay item for pavement marking which includes all costs associated with, thermoplastic pavement markings, including temporary pavement markings prior to thermoplastic, and reflective pavement markers (RPMs).

Total Bid Amount..... $ 340,700.00

Total Bid Amount (in words): Three Hundred Forty Thousand Seven Hundred Dollars

Signature of Official:

Name: Nelson Apolinario

Title: Vice President

Company: Homestead Concrete & Drainage, Inc

Date: 02/05/2026

SECTION 8.0: Required Bid Submittal Forms

DRUG-FREE WORKPLACE CERTIFICATION

In order to have a drug-free workplace program, a business shall:

1) Publish a statement notifying employees that the unlawful manufacture, distribution, dispensing, possession, or use of a controlled substance is prohibited in the workplace and specifying the actions that will be taken against employees for violations of such prohibition.
2) Inform employees about the dangers of drug abuse in the workplace, the business' policy of maintaining a drug-free workplace, any available drug counseling, rehabilitation, and employee assistance programs, and the penalties that may be imposed upon employees for drug abuse violations.
3) Give each employee engaged in providing the commodities or contractual services that are under proposal a copy of the statement specified in Subsection (1).
4) In the statement specified in Subsection (1), notify the employees, that, as a condition of working of the commodities or contractual services that are under proposal, the employee will abide by the terms of the statement and will notify the employee of any conviction of, or plea of guilty or nolo contendere to, any violation of Chapter 893 or of any controlled substance law of the United States or any state, for a violation occurring in the workplace no later than five (5) days after such conviction.
5) Impose a sanction on, or require the satisfactory participation in a drug abuse assistance or rehabilitation program, if such is available in the employee's community, by any employee who is so convicted.
6) Make a good faith effort to continue to maintain a drug-free workplace through implementation of this section.

As the person authorized to sign the statement, I certify that this Company complies fully with the above requirements.

HOMESTEAD CONCRETE & DRAINAGE INC CORPORATE SEAL 1981 FLORIDA

Signature of Official: _____

Name (typed): Nelson Apolinario

Title: Vice President

Company: Homestead Concrete & Drainage, Inc

Date: 02/05/2026

SUBCONTRACTOR LIST

The Company shall list all proposed Subcontractors to be used on this project if they are awarded the Contract.

Classification of Work	Subcontractor Name	Address	Telephone and Fax

REFERENCES

Each bid must be accompanied by a list of at least ***three (3)*** references from current customers, preferably in the public sector, which shall include all the information requested below. **The Village should not be listed as one of the references provided.**

VILLAGE OF PALMETTO BAY - REFERENCE FORM

Solicitation Information: SW 82nd Bike Lanes Improvements
Invitation to Bid No. 2026-11-002

Name of Company: City of Hollywood

To Whom it May Concern,
The above reference vendor is submitting on a proposal solicitation or use of bid that has been issued by the Village of Palmetto Bay. We require that the consultant provide written references with their proposal submission and by providing you with this document the vendor is requesting that you provide the following reference information. We would appreciate you providing the information requested below as well as any other information you feel is pertinent:

Contracted Services Information:

Scope of Work: Construction of new sidewalks and curb ramps meeting ADA standards. Approximately 24,637 linear feet of new sidewalk 5 feet wide

Initial Value of Contract: $2,511,030 Final Value of Contract: $2,511,030

Length of Contract: 365 days

Would you enter into a contract with the Company in the future? x Yes ____ No

Were the services provided acceptable and of quality standards: x Yes ____ No

Was the Company responsive to your requests and resourceful with the task? x Yes ____ No

Did the Company keep you fully informed of any updates and/or concerns related to the contracted services?

x Yes ____ No

If you responded no to any of the above please provide details:

Comments:

Homestead Concrete completed the sidewalk improvements for the Beverly Park project in accordance with the contract documents. The team was responsive, maintained good coordination in the field, and addressed punch list items promptly. Overall, they delivered quality work and met project expectations

Name of Public Entity/Company: City of Hollywood

Name of Individual completing this form: Rudy Damas

Signature: Rudy Damas Title: Project Manager

Telephone: 954-921-3977 Email: rdamas@hollywoodfl.org

Thank you for your support in helping us evaluate our solicitation responses.

Sincerely,
Alessia Bencomo, Procurement Specialist

REFERENCES

Each bid must be accompanied by a list of at least ***three (3)*** references from current customers, preferably in the public sector, which shall include all the information requested below. **The Village should not be listed as one of the references provided.**

VILLAGE OF PALMETTO BAY - REFERENCE FORM

Solicitation Information: SW 82nd Bike Lanes Improvements
Invitation to Bid No. 2026-11-002

Name of Company: _____

To Whom it May Concern,
The above reference vendor is submitting on a proposal solicitation or use of bid that has been issued by the Village of Palmetto Bay. We require that the consultant provide written references with their proposal submission and by providing you with this document the vendor is requesting that you provide the following reference information. We would appreciate you providing the information requested below as well as any other information you feel is pertinent:

Contracted Services Information:

Scope of Work: Resurfacing existing asphalte concrete sidewalks and Implementing drainage improvements to enhance safety accessibility and water management

Initial Value of Contract: $ 479,802.00 Final Value of Contract: $469,746.00

Length of Contract: 195 Calendar days

Would you enter into a contract with the Company in the future? ✓ Yes _____ No

Were the services provided acceptable and of quality standards: ✓ Yes _____ No

Was the Company responsive to your requests and resourceful with the task? ✓ Yes _____ No

Did the Company keep you fully informed of any updates and/or concerns related to the contracted services?

✓ Yes _____ No

If you responded no to any of the above please provide details:

_____

_____

_____

Comments:

Homestead Concrete did a remarkable job from tim to time again. They delivered high-quality results in a professional and tigely manner, Their team was reliable, responsive, and easy to work with, and overall outcome. met our expectations.

Name of Public Entity/Company: City of Tamarac

Name of Individual completing this form: Christopher Lyle

Signature: Chris Lyle Title: project Manager

Telephone: 954-597-3704 Email: Christopher.lyle@tamarac.org

Thank you for your support in helping us evaluate our solicitation responses.

Sincerely,
Alessia Bencomo, Procurement Specialist

REFERENCES

Each bid must be accompanied by a list of at least ***three (3)*** references from current customers, preferably in the public sector, which shall include all the information requested below. **The Village should not be listed as one of the references provided.**

VILLAGE OF PALMETTO BAY - REFERENCE FORM

Solicitation Information: SW 82nd Bike Lanes Improvements
Invitation to Bid No. 2026-11-002

Name of Company: Homestead Concrete & Drainage

To Whom it May Concern,
The above reference vendor is submitting on a proposal solicitation or use of bid that has been issued by the Village of Palmetto Bay. We require that the consultant provide written references with their proposal submission and by providing you with this document the vendor is requesting that you provide the following reference information. We would appreciate you providing the information requested below as well as any other information you feel is pertinent:

Contracted Services Information:

Scope of Work: Work which includes but is not limited to all labor, materials, machinery, tools, equipment and incidentals, as necessary for the construction of a new westbound left turn lane along Miramar Boulevard onto Buttonwood Avenue. Work is inclusive of tree removals and the relocation of the existing irrigation pump/lines to a new well to accommodate the new turn lane.

Initial Value of Contract: $153,059.52 Final Value of Contract: $153,059.52

Length of Contract: 150 Days

Would you enter into a contract with the Company in the future? ✓ Yes _____ No

Were the services provided acceptable and of quality standards: ✓ Yes _____ No

Was the Company responsive to your requests and resourceful with the task? ✓ Yes _____ No

Did the Company keep you fully informed of any updates and/or concerns related to the contracted services?
✓ Yes _____ No

If you responded no to any of the above please provide details:

_____

_____

_____

Comments:

Working with Homestead Concrete was a great experience. They communicated clearly, stayed on schedule, and delivered excellent craftsmanship. The crew was professional and tidy, and the final project exceeded our expectations.

Name of Public Entity/Company: City of Miramar

Name of Individual completing this form: DuSean Grant

Signature: _____ Title: Senior Project Engineer

Telephone: 954-602-3318 Email: dgrant@miramarfl.gov

Thank you for your support in helping us evaluate our solicitation responses.

Sincerely,
Alessia Bencomo, Procurement Specialist

ACKNOWLEDGEMENT, WARRANTY AND ACCEPTANCE

A. Company warrants that it is willing and able to comply with all applicable Village laws, rules and regulations.

B. Company warrants that they have read, understand and are willing to comply with all of the requirements of the ITB and the addendum/ addenda nos.

C. Company warrants that it will not delegate or sub-contract its responsibilities under an agreement without the prior written permission of the Council.

D. Company warrants that all information provided by it in connection with this bid is true and accurate.

E. CONTINGENCY FEE AND CODE OF ETHICS WARRANTY:

Company warrants that neither it, nor any principal, employee, agent, representative or family member has promised to pay, and Company has not, and will not, pay a fee for the amount of which is contingent upon the Village awarding this contract. Company warrants that neither it, nor any principal, employee, agent, representative has procured, or attempted to procure, this contract in violation of any of the provisions of the Village conflict of interest and code of ethics ordinances. Further, Company acknowledges that a violation of this warranty will result in the termination of the contract and forfeiture of funds paid, or to be paid, to the Company, if the Company is chosen for performance of the contract.

HOMESTEAD CONCRETE & DRAINAGE INC CORPORATE SEAL 1981 FLORIDA

Signature of Official: _____

Name (typed): Nelson Apolinario

Title: Vice President

Company: Homestead Concrete & Drainage, Inc

Date: 02/05/2026

NON-COLLUSIVE AFFIDAVIT

STATE OF FLORIDA }
} ss.:
COUNTY OF MIAMI-DADE }

Nelson Apolinario being first duly sworn, deposes and says that:

(1) He/she is the, (Owner, Partner, Officer, Representative or Agent) of: Homestead Concrete & Drainage, Inc, the Company that has submitted the attached Bid;

(2) He/she is fully informed respecting the preparation and contents of the attached Bid and of all pertinent circumstances respecting such Bid;

(3) Such Bid is genuine and is not a collusive or a sham Bid;

(4) Neither the said Company nor any of its officers, partners, owners, agents, representatives, employees or parties in interest, including this affiant, have in any way colluded, conspired, connived or agreed, directly or indirectly, with any other Company or person to submit a collusive or sham response in connection with the work for which the attached bid has been submitted, or to refrain from responding in connection with such work, or have in any manner, directly or indirectly, sought by agreement or collusion, communication, or conference with any Company or person to fix this Bid or to secure through any collusion, conspiracy, connivance, or unlawful agreement, any advantage against the Village of Palmetto Bay, or any person interested in the proposed Work;

Signed, sealed and delivered
In the presence of

Signature of Official: _____

HOMESTEAD CONCRETE & DRAINAGE INC CORPORATE SEAL 1981 FLORIDA

Name (typed): Nelson Apolinario

Title: Vice President

Company: Homestead Concrete & Drainage, Inc

Date: 02/05/2026

Continued Next Page

ACKNOWLEDGMENT

State of Florida)
) ss.:
County of Miami Dade)

The foregoing instrument was acknowledged before me **by means of** ✓ **physical presence or** _ **online notarization**, this 5th day of FEBRUARY, 2026, by NELSON APOLINARIO
He/She was ✓ personally known, _____ or produced _____ as a form of identification.

WITNESS my hand and official seal

_____
NOTARY PUBLIC, STATE OF FLORIDA

CAREENE NICOLA JOHNSON
Notary Public - State of Florida
Commission # HH 296844
My Comm. Expires Aug 20, 2026
Bonded through National Notary Assn.

SWORN STATEMENT PURSUANT TO SECTION 287.133 (3)(a) FLORIDA STATUES, ON PUBLIC ENTITY CRIMES

THIS FORM MUST BE SIGNED AND SWORN TO IN THE PRESENCE OF A NOTARY PUBLIC OR OTHER OFFICIAL AUTHORIZED TO ADMINISTER OATHS.

1. This sworn statement is submitted to the Village of Palmetto Bay, Florida

By Nelson Apolinario

For Homestead Concrete & Drainage, Inc

Whose business address is: 221 S.W 4th Ave. Homestead, Florida, 33030

And (if applicable) its Federal Employer Identification Number (FEIN) is: 59-2069390

2. I understand that a "public entity crime" as defined In Paragraph 287.133(1)(g), Florida Statutes ,and as may be amended means a violation of any state or federal law by a person with respect to and directly related to the transaction of business with any public entity or with any agency or political subdivision of any other State or of the United States, including, but not limited to, any Proposal or contract for goods or services to be provided to any public entity or an agency or any political subdivision of any other state or of the United Sates and involving antitrust fraud, theft, bribery, collusion, racketeering, conspiracy, or material misrepresentation

3. I understand that "convicted" or "conviction"" as defined in Paragraph 287.133(1)(b), Florida Statutes means a finding of guilt or a conviction of a public entity crime, with or without an adjudication of guilt, in any federal or state trial court of record relating to charges brought by indictment or information after July 1, 1989, as a result or a jury verdict, non-jury trial, or entry of a plea or guilty or nab contenders.

4. I understand that an "affiliate" as defined in Paragraph 287.133(1)(a), Florida Statutes, and means:

A. A predecessor or successor of a person convicted of a public entity crime; or
B. An entity under the control of any natural person who is active in the management of the entity and who has been convicted of a public entity crime. The term "affiliate"' includes those officers, directors, executives, partners, shareholders, employees, members, and agents who are active in the management of an affiliate. The ownership by one person of shares constituting a controlling Interest in another person, ore pooling of equipment or income among persons when not for fair market value under an arm's length agreement, shall be a prima facie case that one person controls another person. A person who knowingly enters

into a joint venture with a person who has been convicted of a public entity crime in Florida during the preceding 36 months shall be considered an affiliate.

5. I understand that a "person" as defined in Paragraph 287.133(1)(e), Florida Statutes, means any natural person or entity organized under the laws or any state or of the United States with the legal power to enter into a binding contract and which Bids or applies to Bids on contracts for the provision of goods or services let by a public entity, or which otherwise transacts or applies to transact business with a public entity. The term "person" includes those officers, directors, executives, partners, shareholders, employees, members, and agents who are active in management of any entity.

Signed, sealed and delivered in the presence:

Signature of Official: _____

Name (typed): Nelson Apolinario

Title: Vice President

Company: Homestead Concrete & Drainage, Inc

Date: 02/05/2026

ACKNOWLEDGMENT

State of Florida)
) ss.:
County of Miami-Dade)

The foregoing instrument was acknowledged before me **by means of** ✓ **physical presence or** _ **online notarization**, this 5th day of February, 2026 by Nelson Apolinario. He/She was ✓ personally known, _____ or produced _____ as a form of identification.

WITNESS my hand and official seal

_____
NOTARY PUBLIC, STATE OF FLORIDA

CAREENE NICOLA JOHNSON
Notary Public - State of Florida
Commission # HH 296844
My Comm. Expires Aug 20, 2026
Bonded through National Notary Assn.

AMERICANS WITH DISABILITIES ACT (ADA)
DISABILITY NONDISCRIMINATION STATEMENT

THIS FORM MUST BE SIGNED AND SWORN TO IN THE PRESENCE OF A NOTARY PUBLIC OR OTHER OFFICIAL AUTHORIZED TO ADMINISTER OATHS.

This sworn statement is submitted to the VILLAGE OF PALMETTO BAY, FLORIDA

by: Nelson Apolinario

(print individual's name and title)

for: Homestead Concrete & Drainage, Inc

(print name of entity submitting sworn statement)

whose business address is: 221 S.W 4th Ave. Homestead, Florida, 33030

and (if applicable) its Federal Employer Identification Number (FEIN) is: 59-2069390

I, being duly first sworn state: That the above named Company, corporation or organization is in compliance with and agreed to continue to comply with, and assure that any sub-contractor, or third party contractor under this project complies with all applicable requirements of the laws listed below including, but not limited to, those provisions pertaining to employment, provision of programs and services, transportation, communications, access to facilities, renovations, and new construction.

The American with Disabilities Act of 1990 (ADA), Pub. L. 101-336, 104 Stat 327, 42 USC 1210112213 and 47 USC Sections 225 and 661 including Title I, Employment; Title II, Public Services; Title III, Public Accommodations and Services Operated by Private entities; Title IV, Telecommunications; and Title V, Miscellaneous Provisions, and as any may be amended.

The Florida Americans with Disabilities Accessibility Implementation Act of 1993, Section 553.501-553.513, Florida Statutes:
The Rehabilitation Act of 1973, 229 USC Section 794;
The Federal Transit Act, as amended 49 USC Section 1612;
The Fair Housing Act as amended 42 USC Section 3601-3631.

Signature of Official: _____

Name (typed): Nelson Apolinario

Title: Vice President

Company: Homestead Concrete & Drainage, Inc

Date: 02/05/2026

Continued Next Page

ACKNOWLEDGMENT

State of Florida)
) ss.:
County of Miami Dade)

The foregoing instrument was acknowledged before me **by means of** ✓ **physical presence or** _ **online notarization**, this 5th day of FEBRUARY, 2026, by NELSON APOLINARIO. He/She was ✓ personally known, _____ or produced _____ as a form of identification.

WITNESS my hand and official seal

_____
NOTARY PUBLIC, STATE OF FLORIDA

CAREENE NICOLA JOHNSON
Notary Public - State of Florida
Commission # HH 296844
My Comm. Expires Aug 20, 2026
Bonded through National Notary Assn.

BUSINESS ENTITY AFFIDAVIT

Bidder or Company hereby recognizes and certifies that no elected official, or employee of the Village of Palmetto Bay (the "Village") shall have a financial interest directly or indirectly in this transaction or any compensation to be paid under or through this transaction, and further, that no Village employee, nor any elected or appointed officer (including Village board members) of the Village, nor any spouse, parent or child of such employee or elected or appointed officer of the Village, may be a partner, officer, director or proprietor of Bidder or Company, and further, that no such Village employee or elected or appointed officer, or the spouse, parent or child of any of them, alone or in combination, may have a material interest in the Company or Bidder. Material interest means direct or indirect ownership of more than five percent (5%) of the total assets or capital stock of the Company or Bidder. Any exception to these above-described restrictions must be expressly provided by applicable law or ordinance and be confirmed in writing by Village. Further, Bidder or Company recognizes that with respect to this transaction or bid, if any Bidder or Company violates or is a party to a violation of the ethics ordinances or rules of the Village, the provisions of Miami-Dade County Code Section 2-11.1, as applicable to Village, Village Charter Section 7.6 (Lobbyist), or the provisions of Chapter 112, part III, Fla. Stat., the Code of Ethics for Public Officers and Employees and as may be amended, such Bidder or Company may be disqualified from furnishing the goods or services for which the bid or proposal is submitted and may be further disqualified from submitting any future bids or proposals for goods or services to Village.

Accordingly, Bidder or Company completes and executes the Business Entity Affidavit form below. The terms "Bidder" or "Company," as used herein, include any person or entity making a bid proposal herein to Village or providing goods or services to Village.

I, Nelson Apolinario being first duly sworn state:

The full legal name and business address of the person(s) or entity contracting or transacting business with the Village of Palmetto Bay ("Village") are (Post Office addresses are not acceptable), as follows:

59-2069390

Federal Employer Identification Number (If none, Social Security Number)

Homestead Concrete & Drainage, Inc

Name of Entity, Individual, Partners or Corporation

Doing Business As (If same as above, leave blank)

221 S.W 4th Ave. Homestead, Florida, 33030

Street Address Suite Village State Zip Code

Continued Next Page

OWNERSHIP DISCLOSURE AFFIDAVIT

1. If the contact or business transaction is with a corporation, the full legal name and business address shall be provided for each officer and director and each stockholder who holds directly or indirectly five percent (5%) or more of the corporation's stock. If the contract or business transaction is with a trust, the full legal name and address shall be provided for each trustee and each beneficiary. All such names and addresses are (Post Office addresses are not acceptable), as follows:

Full Legal Name	Address	Ownership
Alfred Cordero	7991 NW 181st St, Hialeah, FL 33015	100 %
		%
		%

2. The full legal names and business address of any other individual (other than sub-contractors, material men, suppliers, laborers, or lenders) who have, or will have, any interest (legal, equitable, beneficial or otherwise) in the contract or business transaction with the Village are (Post Office addresses are not acceptable), as follows:

Signature of Official: _____

Name (typed): Nelson Apolinario

Title: Vice President

Company: Homestead Concrete & Drainage, Inc

Date: 02/05/2026

Continued Next Page

ACKNOWLEDGMENT

State of Florida)
) ss.:
County of Miami Dade)

The foregoing instrument was acknowledged before me **by means of** ✓ **physical presence or** _ **online notarization**, this 5th day of FEBRUARY, 2026, by NELSON APOLINARIO. He/She was ✓ personally known, _____ or produced _____ as a form of identification.

WITNESS my hand and official seal

C Johnson

_____
NOTARY PUBLIC, STATE OF FLORIDA

CAREENE NICOLA JOHNSON
Notary Public - State of Florida
Commission # HH 296844
My Comm. Expires Aug 20, 2026
Bonded through National Notary Assn.

ACKNOWLEDGMENT OF CONFORMANCE WITH OSHA STANDARDS

To the Village of Palmetto Bay,

We Homestead Concrete & Drainage, Inc Bidder, Proposer, or Company, hereby acknowledge and agree that we, as the Prime Company for Village of Palmetto Bay, Village of Palmetto Bay _____, ITB# 2026-11-002, as specified, have the sole responsibility for compliance with all the requirements of the Federal Occupational Safety and Health Act of 1970 and as may be amended, and all State and local safety and health regulations, and agree to indemnify and hold harmless the Village of Palmetto Bay, against any and all liability, claims, damages losses and expenses they may incur due to the failure of : _____

_____

(Sub-Contractor's Names) to comply with such act or regulation.

Signature of Official: _____

Name (typed): Nelson Apolinario

Title: Vice President

Company: Homestead Concrete & Drainage, Inc

Date: 02/05/2026

ACKNOWLEDGMENT

State of Florida)
) ss.:
County of Miami-Dade)

The foregoing instrument was acknowledged before me **by means of** ✓ **physical presence or** _ **online notarization**, this 5th day of FEBRUARY, 2026, by NELSON APOLINARIO. He/She was ✓ personally known, _____ or produced _____ as a form of identification.

WITNESS my hand and official seal

_____
NOTARY PUBLIC, STATE OF FLORIDA

CAREENE NICOLA JOHNSON
Notary Public - State of Florida
Commission # HH 296844
My Comm. Expires Aug 20, 2026
Bonded through National Notary Assn.

VILLAGE OF PALMETTO BAY
ANTI-KICKBACK AFFIDAVIT

STATE OF FLORIDA)
) ss.:
COUNTY OF Miami Dade)

I, the undersigned, hereby duly sworn, depose and say that no portion of the sum herein bid will be paid to any employees of the Village of Palmetto Bay, its elected officials, and Homestead Concrete & Drainage, Inc _____ or its employees, as a commission, kickback, reward or gift, directly or indirectly by me or any member of my Company or by an officer of the corporation.

Signature of Official: _____

Name (typed): Nelson Apolinario

Title: Vice President

Company: Homestead Concrete & Drainage, Inc

Date: 02/05/2026

ACKNOWLEDGMENT

State of Florida)
) ss.:
County of Miami-Dade)

The foregoing instrument was acknowledged before me **by means of** ✓ **physical presence or** _ **online notarization**, this 5th day of FEBRUARY, 2026, by NELSON APOLINARIO (S) He/She was ✓ personally known, _____ or produced _____ as a form of identification.

WITNESS my hand and official seal

_____
NOTARY PUBLIC, STATE OF FLORIDA

CAREENE NICOLA JOHNSON
Notary Public - State of Florida
Commission # HH 296844
My Comm. Expires Aug 20, 2026
Bonded through National Notary Assn.

STATEMENT OF PAST CONTRACT DISQUALIFICATIONS

The Bidder, Proposer, or Company shall state whether it or any of its officers or employees who have a proprietary interest in it, has ever been disqualified, removed, or otherwise prevented from bidding on, or completing a federal, state, or local government project because of the violation of law, a safety regulation, or for any other reason, including but not limited to financial difficulties, project delays, or disputes regarding work or product quality, and if so to explain the circumstances.

Do you have any disqualification as described in the above paragraph to declare?

Yes or No, If yes, explain the circumstances.

No

Executed on _____ at _____
under penalty of perjury of the laws of the State of Florida that the foregoing is true and correct.

Signature of Official: _____

Name (typed): Nelson Apolinario

Title: Vice President

Company: Homestead Concrete & Drainage, Inc

Date: 02/05/2026

E-VERIFY AFFIDAVIT

STATE OF Florida

COUNTY OF Miami Dade

I, Nelson Apolinario (the individual attesting below), being duly authorized by and on behalf of Homestead Concrete & Drainage, Inc (hereinafter "Employer") after first being duly sworn hereby swears or affirms as follows:

1. Employer understands that E-Verify is the federal E-Verify program operated by the United States Department of Homeland Security and other federal agencies, or any successor or equivalent program used to verify the work authorization of newly hired employees pursuant to federal law in accordance with NCGS §64-25(5), and as the same may be amended.
2. Employer understands that Employers Must Use E-Verify. Each employer, after hiring an employee to work in the United States, shall verify the work authorization of the employee through E-Verify in accordance with NCGS §64-26(a), and as the same may be amended.
3. Employer's subcontractors will comply with E-Verify, and Employer will ensure compliance with E-Verify by any and all subcontractors subsequently hired by Employer.

This 5 day of FEBRUARY 2026.

HOMESTEAD CONCRETE & DRAINAGE INC CORPORATE SEAL 1984 FLORIDA

Signature of Affiant

Print or Type Name: Nelson Apolinario

State of Florida)
) ss.:
County of Miami Dade)

The foregoing instrument was acknowledged before me **by means of** ✓ **physical presence or** _ **online notarization**, this 5th day of FEBRUARY, 2026, by NELSON APOLINARIO (He/She was ✓ personally known, _____ or produced _____ as a form of identification.

Signed and sworn to (or affirmed) before me,
this the 5th day of FEBRUARY, 2026.

My Commission Expires: _____

C Johnson
Notary Public

CAREENE NICOLA JOHNSON
Notary Public - State of Florida
Commission # HH 296844
My Comm. Expires Aug 20, 2026
Bonded through National Notary Assn.

NHCS – E-Verify 081815

Foreign Country of Concern Attestation

Capitalized terms used herein have the definitions ascribed in section 287.138, F.S.

Name of Company is not owned by the government of a Foreign Country of Concern, is not organized under the laws of nor has its principal place of business in a Foreign Country of Concern, and the government of a Foreign Country of Concern does not have a Controlling Interest (twenty five percent (25%) or more) in the Company.

Under penalties of perjury, I declare that I have read the forgoing statement and that the facts stated in it are true.

Printed Name: Nelson Apolinario

Title: Vice President

Signature: _____ Date: 02/05/2026

HOMESTEAD CONCRETE & DRAINAGE INC CORPORATE SEAL 1981 FLORIDA

Affidavit Attesting to Noncoercive Conduct for Labor or Services

Nongovernment Entity name: Homestead Concrete & Drainage, Inc ("**Company**")

Vendor FEIN: 59-2069390

Address: 221 S.W 4th Ave.

City: Homestead, Florida, 33030 State: _____ Zip: _____

Phone number: 305-248-9649 Email Address: bids@homesteadconcrete.com

As a nongovernmental entity executing, renewing, or extending a contract with a government entity, **Company** is required to provide an affidavit under penalty of perjury attesting that **Company** does not use coercion for labor or services in accordance with Section 787.06, Florida Statutes.

As defined in Section 787.06(2)(a), coercion means:

1. Using or threating to use physical force against any person;
2. Restraining, isolating, or confining or threating to restrain, isolate, or confine any person without lawful authority and against her or his will;
3. Using lending or other credit methods to establish a debt by any person when labor or services are pledged as a security for the debt, if the value of the labor or services as reasonably assessed is not applied toward the liquidation of the debt, the length and nature of the labor or service are not respectively limited and defined;
4. Destroying, concealing, removing, confiscating, withholding, or possessing any actual or purported passport, visa, or other immigration document, or any other actual or purported government identification document, of any person;
5. Causing or threating to cause financial harm to any person;
6. Enticing or luring any person by fraud or deceit; or
7. Providing a controlled substance as outlined in Schedule I or Schedule II of Section 893.03 to any person for the purpose of exploitation of that person.

As a person authorized to sign on behalf of the **Company**, I certify that the **Company** does not use coercion for labor or services in accordance with Section 787.06.

Written Declaration

Under penalties of perjury, I declare that I have read the foregoing Affidavit and that the facts stated in it are true.

Printed Name: Nelson Apolinario

Title: Vice President

Signature: _____

Date: 02/05/2026

HOMESTEAD CONCRETE & DRAINAGE INC CORPORATE SEAL 1987 FLORIDA

Form **W-9**
(Rev. August 2013)
Department of the Treasury
Internal Revenue Service

Request for Taxpayer Identification Number and Certification

Give Form to the requester. Do not send to the IRS.

Print or type
See Specific Instructions on page 2.

Name (as shown on your income tax return)

Business name/disregarded entity name, if different from above
HOMESTEAD CONCRETE & DRAINAGE, INC.

Check appropriate box for federal tax classification:
☐ Individual/sole proprietor ☐ C Corporation ☒ S Corporation ☐ Partnership ☐ Trust/estate

☐ Limited liability company. Enter the tax classification (C=C corporation, S=S corporation, P=partnership) ▶

☐ Other (see instructions) ▶

Exemptions (see instructions):
Exempt payee code (if any)
Exemption from FATCA reporting code (if any)

Address (number, street, and apt. or suite no.)
221 SW 4TH AVENUE

Requester's name and address (optional)

City, state, and ZIP code
HOMESTEAD, FL 33030

List account number(s) here (optional)

Part I Taxpayer Identification Number (TIN)

Enter your TIN in the appropriate box. The TIN provided must match the name given on the "Name" line to avoid backup withholding. For individuals, this is your social security number (SSN). However, for a resident alien, sole proprietor, or disregarded entity, see the Part I instructions on page 3. For other entities, it is your employer identification number (EIN). If you do not have a number, see *How to get a TIN* on page 3.

Note. If the account is in more than one name, see the chart on page 4 for guidelines on whose number to enter.

Social security number
[ ][ ][ ] - [ ][ ] - [ ][ ][ ][ ]

Employer identification number
59 - 2069390

Part II Certification

Under penalties of perjury, I certify that:

1. The number shown on this form is my correct taxpayer identification number (or I am waiting for a number to be issued to me), and
2. I am not subject to backup withholding because: (a) I am exempt from backup withholding, or (b) I have not been notified by the Internal Revenue Service (IRS) that I am subject to backup withholding as a result of a failure to report all interest or dividends, or (c) the IRS has notified me that I am no longer subject to backup withholding, and
3. I am a U.S. citizen or other U.S. person (defined below), and
4. The FATCA code(s) entered on this form (if any) indicating that I am exempt from FATCA reporting is correct.

Certification instructions. You must cross out item 2 above if you have been notified by the IRS that you are currently subject to backup withholding because you have failed to report all interest and dividends on your tax return. For real estate transactions, item 2 does not apply. For mortgage interest paid, acquisition or abandonment of secured property, cancellation of debt, contributions to an individual retirement arrangement (IRA), and generally, payments other than interest and dividends, you are not required to sign the certification, but you must provide your correct TIN. See the instructions on page 3.

Sign Here Signature of U.S. person ▶ C. Johnson Date ▶ 2/5/2026

General Instructions

Section references are to the Internal Revenue Code unless otherwise noted.

Future developments. The IRS has created a page on IRS.gov for information about Form W-9, at *www.irs.gov/w9*. Information about any future developments affecting Form W-9 (such as legislation enacted after we release it) will be posted on that page.

Purpose of Form

A person who is required to file an information return with the IRS must obtain your correct taxpayer identification number (TIN) to report, for example, income paid to you, payments made to you in settlement of payment card and third party network transactions, real estate transactions, mortgage interest you paid, acquisition or abandonment of secured property, cancellation of debt, or contributions you made to an IRA.

Use Form W-9 only if you are a U.S. person (including a resident alien), to provide your correct TIN to the person requesting it (the requester) and, when applicable, to:

1. Certify that the TIN you are giving is correct (or you are waiting for a number to be issued),
2. Certify that you are not subject to backup withholding, or
3. Claim exemption from backup withholding if you are a U.S. exempt payee. If applicable, you are also certifying that as a U.S. person, your allocable share of any partnership income from a U.S. trade or business is not subject to the withholding tax on foreign partners' share of effectively connected income, and
4. Certify that FATCA code(s) entered on this form (if any) indicating that you are exempt from the FATCA reporting, is correct.

Note. If you are a U.S. person and a requester gives you a form other than Form W-9 to request your TIN, you must use the requester's form if it is substantially similar to this Form W-9.

Definition of a U.S. person. For federal tax purposes, you are considered a U.S. person if you are:

- An individual who is a U.S. citizen or U.S. resident alien,
- A partnership, corporation, company, or association created or organized in the United States or under the laws of the United States,
- An estate (other than a foreign estate), or
- A domestic trust (as defined in Regulations section 301.7701-7).

Special rules for partnerships. Partnerships that conduct a trade or business in the United States are generally required to pay a withholding tax under section 1446 on any foreign partners' share of effectively connected taxable income from such business. Further, in certain cases where a Form W-9 has not been received, the rules under section 1446 require a partnership to presume that a partner is a foreign person, and pay the section 1446 withholding tax. Therefore, if you are a U.S. person that is a partner in a partnership conducting a trade or business in the United States, provide Form W-9 to the partnership to establish your U.S. status and avoid section 1446 withholding on your share of partnership income.

BID BOND

KNOW ALL MEN BY THESE PRESENTS, that we, Homestead Concrete and Drainage, Inc. (hereinafter called the Principal), and Frankenmuth Insurance Company (hereinafter called the Surety), a Corporation chartered and existing under the laws of the State of Michigan is authorized to do business in the State of Florida, and having an Agent resident therein, such Agent and Company acceptable to the Village of Palmetto Bay, are held and firmly bound unto the Village of Palmetto Bay (hereinafter called Village), in the sum of Five Percent of Amount Bid Dollars ($5% of Amount Bid), good and lawful money of the United States of America, to be paid upon demand of the said Village, to which payment well and truly to be made we bind ourselves, our heirs, executors, administrators, successors and assigns, jointly and severally and firmly by these presents.

WHEREAS; the above bounded Principal contemplates submitting or has submitted a Bid to the Village for furnishing all necessary labor, materials, equipment, machinery, tools, apparatus, services, all insurances and taxes, including but not limited to, state workmen's compensation and unemployment compensation insurance and taxes incurred in the performance of the Contract, and means of transportation for construction of:

VILLAGE OF PALMETTO BAY (the "Village")
SW 82nd Bike Lanes Improvements

for said Village, and;
WHEREAS; the Principal desires to file this Bond in accordance with law, in lieu of a certified Bidder's check otherwise required to accompany this Bid in the amount of five percent (5%) of the Base Bid.

NOW THEREFORE, the conditions of this obligation are such that, if the Bid be accepted, the Principal shall within ten (10) days after receipt of notification of the acceptance thereof, execute the Contract in accordance with the Invitation to Bid and Contact Documents and upon the terms, conditions and price set forth therein, in the form and manner required by the Village and execute sufficient and satisfactory Performance and Payment Bonds payable to the Village of Palmetto Bay, each in an amount of one hundred percent (100%) of the total Contract Price, as indicated in the Bid, in form and with security as set forth in the Invitation to Bid and Contract Documents satisfactory to the Village, then this obligation to be void, otherwise to be and remain in full force and virtue in law; and the Surety shall upon failure of the Principal to comply with any or all of the foregoing requirements within the time specified above immediately pay to the aforesaid Village upon demand the amount hereof in good and lawful money of the United States of America, not as a penalty but as liquidated damages.

IN WITNESS WHEREOF, THE said Homestead Concrete and Drainage, Inc., as "Principal" herein has caused these presents to be signed in its name, by its _____ under its corporation seal, and the said Frankenmuth Insurance Company as "Surety" herein, has caused these presents to be signed in its name by its Attorney-in-Fact, under its corporate seal, this 5th day of February, and attested by its Power of Attorney & Secretary, A.D., 2026.

ATTEST:

_____

Rene Ochoa, Estimator

Homestead Concrete and Drainage, Inc.

By: _____ (Title)

(Principal)

ATTEST: ** Please See Power of Attorney Attached **

_____

Michelle Ramirez, Secretary

Frankenmuth Insurance Company

By: _____

(Surety) Attorney-in-Fact

Jarrett Merlucci, Attorney-in-Fact

(Attorneys-in-Fact who sign this bond must file with it a certified copy of their power-of-Attorney to sign said Bond).

FRANKENMUTH INSURANCE COMPANY

POWER OF ATTORNEY

KNOW ALL MEN BY THESE PRESENTS, that Frankenmuth Insurance Company (the "Company"), a corporation duly organized and existing under the laws of the State of Michigan, having its principal office at 1 Mutual Avenue, Frankenmuth, Michigan 48787, does hereby nominate, constitute and appoint:

Charles J. Nielson, David R. Hoover, Jarrett Merlucci, Ian A. Nipper

Their true and lawful attorney(s)-in-fact, each in their separate capacity if more than one is named above, to make, execute, seal, acknowledge and deliver any and all bonds, contracts and undertakings of suretyship, with the exception of Financial Guaranty Insurance, provided, however, that the penal sum of any one such instrument shall not exceed the sum of:

Fifty Million and 00/100 Dollars ($50,000,000)

This Power of Attorney is granted pursuant to the following Resolution duly adopted at a meeting of the Board of Directors of Frankenmuth Insurance Company:

> "**RESOLVED**, that the President, Senior Vice President or Vice President and each of them under their respective designations, hereby is authorized to execute powers of attorney, and such authority can be executed by use of facsimile signature, which may be attested or acknowledged by any officer of the Company, qualifying the attorney(s) named in the given power of attorney, to execute on behalf of, and acknowledge as the act and deed of Frankenmuth Insurance Company on all bonds, contracts and undertakings of suretyship, and to affix the corporate seal thereto."

IN WITNESS WHEREOF, the Company has caused these presents to be signed and attested by its appropriate officers and its corporate seal hereunto affixed this 15th day of December, 2022.

Seal

Frankenmuth Insurance Company

By _____

Frederick A. Edmond, Jr.,
President and Chief Executive Officer

STATE OF MICHIGAN)
COUNTY OF SAGINAW) ss:

Sworn to before me, a Notary Public in the State of Michigan, by Frederick A. Edmond, Jr., to me personally known to be the individual and officer described in, and who executed the preceding instrument, deposed and said the Corporate Seal and his signature as Officer were affixed and subscribed to said instrument by the authority of the Company.

IN TESTIMONY WHEREOF, I have set my hand, and affixed my Official Seal this 15th day of December, 2022.

_____ (Seal)

Susan L. Fresorger, Notary Public
Saginaw County, State of Michigan
My Commission Expires: April 3, 2028

I, the undersigned, Executive Vice President of Frankenmuth Insurance Company, do hereby certify that the foregoing is a true, correct and complete copy of the original Power of Attorney; that said Power of Attorney has not been revoked or rescinded and is in full force and effect as of this date.

IN WITNESS WHEREOF, I have set my hand and affixed the Seal of the Company, this 5th day of February, , 2026

_____

Andrew H. Knudsen, Executive Vice President,
Chief Operating Officer and Secretary

ALL CORRESPONDENCE RELATED TO BOND VALIDATION AND/OR A CLAIM SHOULD BE DIRECTED TO VP SURETY, 701 U.S. ROUTE ONE, SUITE 1, YARMOUTH, ME 04096

OUR TEAM

Meet some of our trusted team members



ALFRED CORDERO
President



NELSON APOLINARIO
Vice President

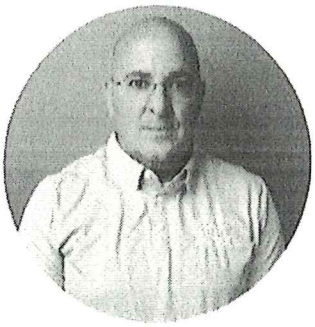

JORGE PENSADO
Office Manager

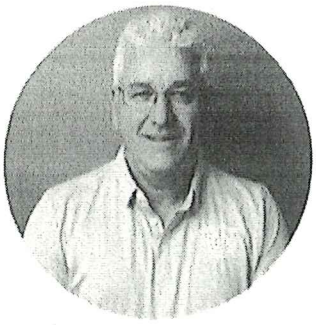

FERNANDO ESPINOSA
SeniorProject Manager



CAREENE JOHNSON
Controller



RENE OCHOA
Estimator

HOMESTEAD CONCRETE H&D & DRAINAGE ®™

PROJECT ORGANIZATIONAL CHART

VICE PRESIDENT:

NELSON APOLINARIO

PROJECT MANAGER:

FERNANDO ESPINOSA

FOREMAN:

HILARIO ROJO

HUMAN RESOURCES:

JORGE PENSADO

BILLING/INVOICES:

CAREENE JOHNSON

HOMESTEAD CONCRETE & DRAINAGE
221 SW 4th AVE Homestead, Fl 33030
Office Phone: 305.248.9649 Fax: 305.248.9650
www.homesteadconcrete.com

PERSONNEL RESUMES

PERSONNEL INFORMATION:

Name: Nelson Apolinario
Job Title: Director of Pre-Construction/Chief Estimator
Company: Homestead Concrete & Drainage Inc

Years of Experience: 20

EDUCATION AND PROFESSIONAL REGISTRATION:

EDUCATION

South Dade Senior High, FL; 1999-2003
- High School Diploma

Belmont Abbey College, NC; 2003
- 1 year college credit

Miami Dade College, FL; JUNE 2004- 2007
- Completing an AS Degree in Building Construction Technology

PROFESSIONAL LICENSES & CERTIFICATIONS:

- Certified General Contractors License: CGC1512891
- Certified Underground Utility & Excavation License: CUC1224684
- OSHA 10 Hour Construction Safety training certified
- Construction Defect Awareness Training
- ATTSA Certified - #37
- Pervious Concrete Technician – PCC021844

EXPERIENCE AND QUALIFICATIONS

Homestead Concrete & Drainage; January 2004 – Present
Officer "Director"/Chief Estimator/Project Manager

Responsible for managing/monitoring the progress of projects from the ground up. Maintain quality and cost control, responsible to issuing and awarding contracts to subcontractors and implementing company polices and procedures to comply with all project drawing and specifications.

Track all project costs, schedules and budgets. Resolve any issues that arise with the owner, architects and engineers. Including but not limited to the following:

- Control of all Pre-Construction Activities
- Coordination with project superintendent and crew members
- Scheduling of work
- Coordination of field activities
- Daily reports and measurements
- Invoicing
- Change orders
- Scheduling Subcontractors
- Submittals
- Material ordering
- Reviewing and Signing Contracts
- Collecting of funds
- Financials

Estimating Duties

- Preparing of proposals
- Estimating upcoming projects
- Estimating software (Quest Solutions/OST)
- Project Scheduling
- Preparing Budgets

LANGUAGE SKILLS

- English
- Portuguese
- Spanish

LIST OF RECENT CURRENT AND COMPLETED JOBS

- Palm Beach International Airport – Air Cargo
  - Project Manager
- Key West International Airport – Apron Improvements
  - Project Manager
- Palm Beach International Airport -- Flight Signature
  - Project Manager

- City of West Miami – Sidewalks Replacements
  - Estimator of project
- Hensel Phelps – South Terminal Expansion Busway (MIA AIRPORT)
  - Estimator of project
  - 21" Concrete – over 5,000CY
  - Color Concrete
- Town of Miami Lakes – Sidewalk Replacements
  - Estimator of project
- City of Cooper City – Sidewalk Replacements
  - Estimator of project
- City of Miami Beach – Miscellaneous work around the city
  - Estimator of project
- Acai Associates – Broward County ADA Bus Stops (All Over)
  - Estimator of project
- AFCO Construction – West Palm Beach Airport (Taxiways)
  - Estimator of project
- City Of Homestead – Harris Field Restrooms
  - Superintendent of Project
  - In Charge of 8 man crew
  - Partial responsible of sub buyouts
  - Keeping Schedules
- Seminole Tribe – Charter School
  - Project Management Assistant
  - Buyouts of Sub contractors and Suppliers
  - Coordinating RFI and Meeting with Owners, Architects
  - Coordinating the Superintendents
- Seminole Tribe – Water Treatment Plant
  - Project Management Assistant
  - Buyouts of Sub contractors and Suppliers
  - Coordinating RFI and Meeting with Owners, Architects
  - Coordinating the Superintendents
- HC&D – Warehouse and Office Extension
- City of Lauderdale Lakes – 29th St Traffic Calming
  - Estimator of project
- City of Lauderdale Lakes – 41st St Traffic Calming
  - Estimator of project
- City of Fort Lauderdale – Golden Heights Entry Signs
  - Estimator of project
- City of Fort Lauderdale – NE 15th Street improvements
  - Estimator of project
- City of Fort Lauderdale – ADA Annual Improvements
  - Estimator of project
- City of Fort Lauderdale – Las Olas Improvements
  - Estimator of project

- Harry Pepper Associates – Compartment C
  - Estimator of project
  - 31 Structures
  - Over 15,000 CY of Concrete
  - 4000 TNs of Rebar
  - Helped Superintendent keep suppliers and orders on time and scheduled
- Ric-Man International – Washington Ave Improvements
  - Estimator of project
- Ric-Man International – Neighborhood No. 7 NIP
  - Estimator of project
- Ric-Man International – Broadview NIP package No 2
  - Estimator of project
- Ric-Man Construction – Hillsboro BLVD Improvements
  - Estimator of project
- Ric-Man Construction – Government Cut – Micro Tunnel
  - 72" Tunnel from Miami Beach to Fischer Island
  - 64" Tunnel from Fischer Island to Port of Miami
  - Complete Management of all concrete & support team to Ric-Man
- DMSI – Sunset Island 1 & 2
  - Estimator of project
  - Curbs and Sidewalks
- DMSI – Biscayne Point Neighborhood Improvement
  - Estimator of project
- Ric-Man International - Surfside
  - Estimator of project
- Harbour Construction – Dade Blvd Seawall and Pervious
  - Estimator of project
  - First Pervious Concrete in Miami Beach
- Harbour Construction – Botanical Gardens
  - Estimator of project
- Hole In Donut Land Restoration Task 1 – Federal Government
  - Complete Project management of project from estimating to buildup.
  - Buyouts of Subcontractors
  - Budget management
  - Schedules
- Hole In Donut Land Restoration Task 5 – Federal Government
  - Complete Project management of project from estimating to buildup.
  - Buyouts of Subcontractors
  - Budget management
  - Schedules
- Solar Building – Cooper City
  - Superintendent of this project
  - Charge of 10 man crew
  - Keeping ahead of Schedules for HCD & Subs

- City of Marathon – Fire Station
  - Complete Project management of project from estimating to buildup.
  - Buyouts of Subcontractors
  - Budget management
  - Schedules

REFERENCE INFORMATION:

Name: Jonathan Taylor – Everglades national Park
Phone: 305-242-7876

Name: Paul Knight – Ryan Southern inc
Phone: 954-427-5599

Name: Nelson Liberti – DMSI Inc
Phone: 954-654-2677

Name: David Jr – DMSI Inc
Phone: 754-264-9594

Marcelo F. Espinosa
Engineer Intern

EDUCATION
B.S., Civil Engineering, Catholic University of Ecuador,1990

REGISTRATION
Engineer Intern, State of Florida, Certified No. 1100012596

EXPERIENCE
Marcelo F. Espinosa has over 32 years of experience in the design and construction of roadway. Mr. Espinosa's experience in construction includes: costs estimates, billing, cost control, heavy machinery, bidding, scheduling and invoicing. The design experience includes preparation of final design plans, geometrics (plan and profile), signing and pavement markings and access management. Mr. Espinosa has extensive computer experience in MicroStation, Geopak, AutoTURN, GuidSIGN, SureTrack, Project, Primavera, Procore. Specific project experience includes the following:

HOMESTEAD CONCRETE & DRAINAGE, INC. 2007 – PRESENT

- **Port of Miami-Terminal V, Voyages Terminal, Miami Beach, FL.** Project Manager for the construction of a new cruise terminal. HC&D was in charge of all the exterior concrete works, including: parking areas, sidewalks, curbs, boarding bridge foundation, terraces, etc. The tasks were: bidding process, scheduling, field supervision, cost control and invoicing
- **Port of Miami-Terminal B&C, Norwegian Terminal, Miami Beach, FL.** Project Manager for the construction of a new cruise terminal. HC&D was in charge of construction of new 1,600 lf of concrete boarding bridge foundation. The tasks were: scheduling, field supervision, cost control and invoicing
- **Key West International Airport, Strengthen/Rehabilitate Commercial Apron , FL.** Project Manager for the reconstruction of a new taxi-way. The duties was: scheduling, field supervision, cost control and invoicing
- **Alton Rd Improvements, from 5th Street to Michigan Avenue. Miami Beach, FL.** Project Manager for the construction of new red concrete sidewalk, driveways, concrete curbs, parking areas. The duties was: scheduling, field supervision, cost control and invoicing
- **Master Pump Station No. 3, Miami-Florida.** Project Manager for the construction of new pump station, part of Downtown Miami's Brickell area sewer system expansion. Duties include safety and quality control; management and supervision of field staff; manpower, material and resource management to achieve schedule objectives.
- **HP-5 Project Repair. U.S. Army Corps of Engineers, Florida.** Project manager for install Cast in Place Pipe (CIPP) for two (2) double barrel corrugated metal pipe, 10 feet in diameter and 100 feet in length. His responsibilities included: bidding process, submittals phase, schedules, construction, cost control and project administration using Quality Control System (QCS) software.
- **Herbert Hoover Dike, Culverts C-5 and C-5A Repairs. U.S. Army Corps of Engineers, Florida.** Project manager for the repair of six (6) corrugated metal pipe, 10 feet in diameter and 160 feet in length. His responsibilities included: bidding process, submittals phase, schedules, construction, cost control and project administration using Quality Control System (QCS) software.
- **SR 40 Lighting and Streetscape Enhancement, City of Ocala, FL.** Project Manager for the construction of new concrete sidewalk, pedestrian brick pavements, landscaping, irrigation, lighting and traffic signals. The responsibilities are: bidding, scheduling, field supervision and invoicing
- **NW 41th Street Traffic Calming, City of Lauderdale Lakes, FL.** Project Manager for the reconstruction of NW 41th Street, from SR 7 to 31st Ave. The scope of works include: milling and resurfacing, concrete sidewalk, curbs, landscaping, irrigation, signing and pavement markings. The duties envolved in this Project are: bidding, scheduling, field supervision and invoicing.
- **Dixie Highway Northern and Southern Gateway, City of Oakland Park, FL.** Project Manager for the construction of new pedestrian pavements, planting, sodding, irrigation, fencing, structures, and furnishings along Dixie Highway between Cypress Creek Rd and Oakland Park Blvd. The responsibilities are: bidding, scheduling, field supervision and invoicing.

HDR. 2005 – 2007

- **NW 87th Ave Reconstruction, FDOT District 6, Miami-Dade County, FL.** Project Designer for the reconstruction of NW 87th Avenue, from NW 58th Street to NW 74th Street. NW 87th Avenue is being reconstructed from a 2-lane undivided rural section to a 5-lane undivided urban section. A complete stormwater management system, installation of a closed drainage system, construction of new canal headwalls and a pollution control structure, new traffic signals and street lighting are some of the major improvements within the corridor. Responsibilities include roadway geometrics, access management, field reviews and plans preparations.
- **Miami-Dade Flashing School Signals, Miami-Dade County Public Works, FL.** Project Designer in the evaluation of the "School Zone" of 10 Elementary Schools through out Miami-Dade County. This project entails the improvements of the "School Zone" with proper signage, pavement markings, and signalization. Responsible for supporting the engineer and cad staff with the initial engineering set of plans as well as miscellaneous elements of the project.
- **Eller Drive/US 1 Loop New Facility Design, FDOT District 4, Broward County, FL.** Designer for a proposed loop that will provide direct connection from West Bound Eller Drive to South Bound US-1, which is currently grade separated. The proposed Loop Ramp contains four different ramp typical sections that include MSE retaining walls and barrier walls as well as a bridge structure over an existing ramp connecting US-1 South Bound and I-595 West Bound. Specific responsibilities to date have included field reviews for specific lighting issues and the preparation of the Lighting Plan component of the contract set of plans.
- **Osceola Blvd/SR 60 Resurfacing, FDOT District 4, Indian River County, FL.** Designer for this 5-mile roadway resurfacing and improvements project. The set of contract plans for this project include roadway, signing and marking, signalization, lighting, and landscaping plans. Improvements of SR 60 consist of new concrete sidewalk where missing, vertical sight distance criteria violation (analysis/mitigation), drainage improvements, lengthening of auxiliary lanes and intersection safety improvements. Responsibilities include roadway geometrics, access management, field reviews, signing and pavement markings, estimates and plans preparations.

EDWARDS & KELCEY. 2003 – 2004

- **Venetian Islands, Miami Beach, Fl.** Assisted in the production of roadway plans for the milling and resurfacing of various streets throughout four islands comprising of Venetian Islands. Duties involve design, permitting, technical specifications, storm sewer system, street reconstruction, paved parking areas and landscape architecture.

DMJM + HARRIS. 2000 – 2003

- **Red Road (NW 57th Ave. / SR 953), Dade County, FL.** Assisted in the production of roadways plans for the widening of the roadway within the City of Hialeah, from West 46th Street to West 78th Place. Responsibilities included plans production, geometry design and computation of quantities.
- **State Road 309, Montgomery County, PA.:** Prepared Right-of-Way Claim Information drawings for property acquisitions along the project alignment; calculated take and residual areas resulting from the widening of S.R. 309. Project involved the development of property plats for over 50 parcels located along S.R. 309 from deeds of record for each property, recorded subdivision or lot plans of Upper Dublin and Lower Gwynedd and/or from field survey.
- **TRI-RAIL South Florida Rail Corridor, Miami Dade, Broward & West Palm Beach Counties, Fl:** Involved in the preparation of rail plans for the double tracking project along the corridor. The effort included design of profile, geometry design and computation of quantities.
- **State Road 45 (US 41), from Bell Lake Rd. to Suydam Rd., Pasco County, FL.** Involved in the design of roadway plans, vertical profile, geometry and quantities

PROFESSIONAL TRAINING

- Construction Quality Management for Contractors. U.S Army Corps of Engineers
- GEOPAK Road I
- Sheet Clipping with RFClip and GEOPAK
- Electronic Delivery (FDOT)
- Basis of Estimates (FDOT # BT-05-0116)
- Horizontal Clearance (FDOT # BT-05-0109)

2024 FLORIDA PROFIT CORPORATION ANNUAL REPORT

DOCUMENT# F20141

Entity Name: HOMESTEAD CONCRETE & DRAINAGE, INC.

Current Principal Place of Business:

221 S.W. 4TH AVE
HOMESTEAD, FL 33030

Current Mailing Address:

221 S.W. 4TH AVE.
HOMESTEAD, FL 33030 US

FEI Number: 59-2069390

FILED
Jan 08, 2024
Secretary of State
1961400226CC

Certificate of Status Desired: No

Name and Address of Current Registered Agent:

TOURON, FRANCISCO III
2665 S. BAYSHORE DRIVE
STE. 300
MIAMI, FL 33133 US

The above named entity submits this statement for the purpose of changing its registered office or registered agent, or both, in the State of Florida.

SIGNATURE: FRANCISCO TOURON 01/08/2024

Electronic Signature of Registered Agent — Date

Officer/Director Detail :

Title	PRESIDENT
Name	CORDERO, ALFRED
Address	7991 NW 181 ST
City-State-Zip:	MIAMI FL 33015

Title	VICE PRESIDENT
Name	APOLINARIO, NELSON D
Address	17500 SW 244 STREET
City-State-Zip:	HOMESTEAD FL 33031

Title	SECRETARY
Name	PENSADO, JORGE
Address	7680 SW 156TH COURT B112
City-State-Zip:	MIAMI FL 33193

I hereby certify that the information indicated on this report or supplemental report is true and accurate and that my electronic signature shall have the same legal effect as if made under oath; that I am an officer or director of the corporation or the receiver or trustee empowered to execute this report as required by Chapter 607, Florida Statutes; and that my name appears above, or on an attachment with all other like empowered.

SIGNATURE: JORGE PENSADO CORPORATE SECRETARY 01/08/2024

Electronic Signature of Signing Officer/Director Detail — Date

LIST OF REFERENCES

PROJECT #1

Name of Project: NW 70th Avenue Traffic Calming

Project Location: NW 70th Avenue

Description of project:

Construction/installation of eight (8) new traffic calming parabolic speed hump systems, parabolic speed humps systems, (2) roundabouts and associated median improvements with RA curb, D curb, F curb and header curb with brick pavers, turf blocks and landscaping improvements.

Budget: $484,872.00

Timeline of project: 120 Days

Name: Christopher Lyle

Title: Project Manager

Phone Number: (954) 597-3704

PROJECT #2

Name of Project: Safe Route to Schools Locations Phase 21 FM 439894-1

Project Location: High School Various locations

Description of project:

Installing pedestrian signals head and push button detection at existing signalized intersections, school speed zone signs and flashing beacons, school crosswalk signs, pavement markings, sidewalks, curb and gutter, pedestrian ramps.

Budget: $436,424.00

Timeline of project: 365 Days

Name: Felix J. Hernandez

Title: Roadway Construction Engineer

Phone Number: 305-679-0038

PROJECT #3

Name of Project: Neighborhood Participation Program Phase IV

Project Location: Various locations in City of Sunrise

Description of project:

Work is in the City of Sunrise at various locations. Work consists of twelve (12) projects in eight (8) neighborhoods within the City limits.

Budget: $362,751.01

Timeline of project: 365 Days

Name: Luisa Fernanda Arbeláez

Title: Capital Projects Project Manager

Phone Number: (954) 888-6009

PROJECT #4

Name of Project: 443944-1-58 Beverly Park Various Locations - Sidewalk

Project Location: Beverly Park Various Locations

Description of project:

Construct new sidewalks and curb ramps meeting ADA standards. Approximately 24637 linear feet of new sidewalk 5 feet wide will be constructed on either side of the streets with curb ramps to fill-in and provide connectivity to existing sidewalks within Beverly Park neighborhood. The proposed sidewalks will be installed in the existing swale area.

Budget: $2,511,030.00

Timeline of project: 365 Days

Name: Luis Lopez, P.E.

Title: Engineering Support Services Manager

Phone Number: 954-921-3410

PROJECT #5

Name of Project: 443976-1-58 Various Locations Bike Lane - Sidewalk

Project Location: Various Locations Bike Lane

Description of project:

Construct new sidewalks, ADA curb ramps, and add bike sharrows on N 58th Ave from Johnson St. to Taft St. Approximately 23,627 linear feet of new sidewalk 5 feet wide will be constructed on either side of the streets with curb ramps to fill-in and provide connectivity to existing sidewalks within the Hollywood Beach Heights and Hollywood Beach Estates neighborhood.

Budget: $2,633,760.00

Timeline of project: 365 Days

Name: Luis Lopez, P.E.

Title: Engineering Support Services Manager

Phone Number: 954-921-3410

CONTRACTOR shall provide a comprehensive list of all relevant equipment currently owned or lease

Item#	Title or Description of Equipment	Quantity	Owned/Leased
1	Backhoe	1	Owned
2	Ditch Witch – Trencher	1	Owned
3	Large Screed	1	Owned
4	Small Screed	1	Owned
5	John Deere - Skid Steer Loader	1	Owned
6	Metal Forms	1	Owned
7	HEM PAVER	1	Owned
8	Atlas Air Compressor	1	Owned
9	Kraftsman Trailer	1	Owned
10			
11			
12			
13			
14			
15			
16			
17			

580

CERTIFICATE OF LIABILITY INSURANCE

DATE (MM/DD/YYYY): 02/02/2026

THIS CERTIFICATE IS ISSUED AS A MATTER OF INFORMATION ONLY AND CONFERS NO RIGHTS UPON THE CERTIFICATE HOLDER. THIS CERTIFICATE DOES NOT AFFIRMATIVELY OR NEGATIVELY AMEND, EXTEND OR ALTER THE COVERAGE AFFORDED BY THE POLICIES BELOW. THIS CERTIFICATE OF INSURANCE DOES NOT CONSTITUTE A CONTRACT BETWEEN THE ISSUING INSURER(S), AUTHORIZED REPRESENTATIVE OR PRODUCER, AND THE CERTIFICATE HOLDER.

IMPORTANT: If the certificate holder is an ADDITIONAL INSURED, the policy(ies) must have ADDITIONAL INSURED provisions or be endorsed. If SUBROGATION IS WAIVED, subject to the terms and conditions of the policy, certain policies may require an endorsement. A statement on this certificate does not confer rights to the certificate holder in lieu of such endorsement(s).

PRODUCER	CONTACT NAME: Amanda Nogues
Eastern Insurance Group, Inc. 7400 SW 50th Terrace Suite 100 Miami FL 33155	PHONE (A/C, No, Ext): (305) 595-3323 FAX (A/C, No): (305) 595-7135 E-MAIL ADDRESS: amanda.nogues@eigrisk.com

INSURED	INSURER(S) AFFORDING COVERAGE	NAIC #
Homestead Concrete & Drainage, Inc. 209 SW 4 Avenue Homestead FL 33030	INSURER A : Bridgefield Employers Insuranc	10701
	INSURER B :	
	INSURER C :	
	INSURER D :	
	INSURER E :	
	INSURER F :	

COVERAGES **CERTIFICATE NUMBER:** Master 25-26 **REVISION NUMBER:**

THIS IS TO CERTIFY THAT THE POLICIES OF INSURANCE LISTED BELOW HAVE BEEN ISSUED TO THE INSURED NAMED ABOVE FOR THE POLICY PERIOD INDICATED. NOTWITHSTANDING ANY REQUIREMENT, TERM OR CONDITION OF ANY CONTRACT OR OTHER DOCUMENT WITH RESPECT TO WHICH THIS CERTIFICATE MAY BE ISSUED OR MAY PERTAIN, THE INSURANCE AFFORDED BY THE POLICIES DESCRIBED HEREIN IS SUBJECT TO ALL THE TERMS, EXCLUSIONS AND CONDITIONS OF SUCH POLICIES. LIMITS SHOWN MAY HAVE BEEN REDUCED BY PAID CLAIMS.

INSR LTR	TYPE OF INSURANCE	ADDL INSD	SUBR WVD	POLICY NUMBER	POLICY EFF (MM/DD/YYYY)	POLICY EXP (MM/DD/YYYY)	LIMITS	
	COMMERCIAL GENERAL LIABILITY						EACH OCCURRENCE	$
	☐ CLAIMS-MADE ☐ OCCUR						DAMAGE TO RENTED PREMISES (Ea occurrence)	$
							MED EXP (Any one person)	$
							PERSONAL & ADV INJURY	$
	GEN'L AGGREGATE LIMIT APPLIES PER:						GENERAL AGGREGATE	$
	☐ POLICY ☐ PRO-JECT ☐ LOC						PRODUCTS - COMP/OP AGG	$
	☐ OTHER:							$
	AUTOMOBILE LIABILITY						COMBINED SINGLE LIMIT (Ea accident)	$
	☐ ANY AUTO						BODILY INJURY (Per person)	$
	☐ OWNED AUTOS ONLY ☐ SCHEDULED AUTOS						BODILY INJURY (Per accident)	$
	☐ HIRED AUTOS ONLY ☐ NON-OWNED AUTOS ONLY						PROPERTY DAMAGE (Per accident)	$
								$
	☐ UMBRELLA LIAB ☐ OCCUR						EACH OCCURRENCE	$
	☐ EXCESS LIAB ☐ CLAIMS-MADE						AGGREGATE	$
	☐ DED ☐ RETENTION $							$
A	WORKERS COMPENSATION AND EMPLOYERS' LIABILITY ANY PROPRIETOR/PARTNER/EXECUTIVE OFFICER/MEMBER EXCLUDED? (Mandatory in NH) Y/N: N If yes, describe under DESCRIPTION OF OPERATIONS below	N/A		830-55004	12/13/2025	12/13/2026	☒ PER STATUTE ☐ OTH-ER	
							E.L. EACH ACCIDENT	$ 1,000,000
							E.L. DISEASE - EA EMPLOYEE	$ 1,000,000
							E.L. DISEASE - POLICY LIMIT	$ 1,000,000

DESCRIPTION OF OPERATIONS / LOCATIONS / VEHICLES (ACORD 101, Additional Remarks Schedule, may be attached if more space is required)

Project/Description:
SW 82nd Bike Lanes

CERTIFICATE HOLDER

Village of Palmetto Bay
9705 East Hibiscus Street
Palmetto Bay FL 33157

CANCELLATION

SHOULD ANY OF THE ABOVE DESCRIBED POLICIES BE CANCELLED BEFORE THE EXPIRATION DATE THEREOF, NOTICE WILL BE DELIVERED IN ACCORDANCE WITH THE POLICY PROVISIONS.

AUTHORIZED REPRESENTATIVE

© 1988-2015 ACORD CORPORATION. All rights reserved.

The ACORD name and logo are registered marks of ACORD

EDWAELE-06 STWIG(581

CERTIFICATE OF LIABILITY INSURANCE

DATE (MM/DD/YYYY) 2/3/2026

THIS CERTIFICATE IS ISSUED AS A MATTER OF INFORMATION ONLY AND CONFERS NO RIGHTS UPON THE CERTIFICATE HOLDER. THIS CERTIFICATE DOES NOT AFFIRMATIVELY OR NEGATIVELY AMEND, EXTEND OR ALTER THE COVERAGE AFFORDED BY THE POLICIES BELOW. THIS CERTIFICATE OF INSURANCE DOES NOT CONSTITUTE A CONTRACT BETWEEN THE ISSUING INSURER(S), AUTHORIZED REPRESENTATIVE OR PRODUCER, AND THE CERTIFICATE HOLDER.

IMPORTANT: If the certificate holder is an ADDITIONAL INSURED, the policy(ies) must have ADDITIONAL INSURED provisions or be endorsed. If SUBROGATION IS WAIVED, subject to the terms and conditions of the policy, certain policies may require an endorsement. A statement on this certificate does not confer rights to the certificate holder in lieu of such endorsement(s).

PRODUCER	CONTACT NAME:	
Acrisure South Insurance Services, LLC 1317 Citizens Blvd Leesburg, FL 34748	PHONE (A/C, No, Ext): (800) 845-8437	FAX (A/C, No):
	E-MAIL ADDRESS:	

INSURED	INSURER(S) AFFORDING COVERAGE	NAIC #
Edwards Electric Corp 7231 Southern Blvd, Suite C2 West Palm Beach, FL 33413	INSURER A : The Travelers Indemnity Company	25658
	INSURER B : Fidelity and Guaranty Insurance Company	35386
	INSURER C : Travelers Property Casualty Company of America	25674
	INSURER D : Insurance Company of the West	27847
	INSURER E : Ironshore Specialty Insurance Company	25445
	INSURER F : Vantage Risk Assurance Company	32077

COVERAGES **CERTIFICATE NUMBER:** **REVISION NUMBER:**

THIS IS TO CERTIFY THAT THE POLICIES OF INSURANCE LISTED BELOW HAVE BEEN ISSUED TO THE INSURED NAMED ABOVE FOR THE POLICY PERIOD INDICATED. NOTWITHSTANDING ANY REQUIREMENT, TERM OR CONDITION OF ANY CONTRACT OR OTHER DOCUMENT WITH RESPECT TO WHICH THIS CERTIFICATE MAY BE ISSUED OR MAY PERTAIN, THE INSURANCE AFFORDED BY THE POLICIES DESCRIBED HEREIN IS SUBJECT TO ALL THE TERMS, EXCLUSIONS AND CONDITIONS OF SUCH POLICIES. LIMITS SHOWN MAY HAVE BEEN REDUCED BY PAID CLAIMS.

INSR LTR	TYPE OF INSURANCE	ADDL INSD	SUBR WVD	POLICY NUMBER	POLICY EFF (MM/DD/YYYY)	POLICY EXP (MM/DD/YYYY)	LIMITS	
A	X COMMERCIAL GENERAL LIABILITY CLAIMS-MADE X OCCUR GEN'L AGGREGATE LIMIT APPLIES PER: POLICY X PRO-JECT LOC OTHER:			4TCOA0936381IND25	11/1/2025	11/1/2026	EACH OCCURRENCE DAMAGE TO RENTED PREMISES (Ea occurrence) MED EXP (Any one person) PERSONAL & ADV INJURY GENERAL AGGREGATE PRODUCTS - COMP/OP AGG EBL AGG	$ 1,000,000 $ 300,000 $ 5,000 $ 1,000,000 $ 2,000,000 $ 2,000,000 $ 2,000,000
B	AUTOMOBILE LIABILITY X ANY AUTO OWNED AUTOS ONLY SCHEDULED AUTOS HIRED AUTOS ONLY NON-OWNED AUTOS ONLY			BAA0963291252SG	11/1/2025	11/1/2026	COMBINED SINGLE LIMIT (Ea accident) BODILY INJURY (Per person) BODILY INJURY (Per accident) PROPERTY DAMAGE (Per accident)	$ 1,000,000 $ $ $
C	X UMBRELLA LIAB X OCCUR EXCESS LIAB CLAIMS-MADE DED X RETENTION $ 10,000			CUPA0963985252S	11/1/2025	11/1/2026	EACH OCCURRENCE AGGREGATE	$ 4,000,000 $ 4,000,000
D	WORKERS COMPENSATION AND EMPLOYERS' LIABILITY ANY PROPRIETOR/PARTNER/EXECUTIVE OFFICER/MEMBER EXCLUDED? (Mandatory in NH) Y / N If yes, describe under DESCRIPTION OF OPERATIONS below	N / A		WFL 5080591 01	11/1/2025	11/1/2026	X PER STATUTE OTH-ER E.L. EACH ACCIDENT E.L. DISEASE - EA EMPLOYEE E.L. DISEASE - POLICY LIMIT	$ 1,000,000 $ 1,000,000 $ 1,000,000
E	Pollution			ICELLUW00600109	11/1/2025	11/1/2026	Aggregate	1,000,000
F	Equipment Floater			IMA2500532202	11/1/2025	11/1/2026	Leased/Rented Equip	100,000

DESCRIPTION OF OPERATIONS / LOCATIONS / VEHICLES (ACORD 101, Additional Remarks Schedule, may be attached if more space is required)
Project/Description:
SW 82nd Bike Lanes

CERTIFICATE HOLDER

Village of Palmetto Bay
9705 East Hibiscus Street
Palmetto Bay, FL 33157

CANCELLATION

SHOULD ANY OF THE ABOVE DESCRIBED POLICIES BE CANCELLED BEFORE THE EXPIRATION DATE THEREOF, NOTICE WILL BE DELIVERED IN ACCORDANCE WITH THE POLICY PROVISIONS.

AUTHORIZED REPRESENTATIVE

© 1988-2015 ACORD CORPORATION. All rights reserved.
The ACORD name and logo are registered marks of ACORD

ADDENDUM NO. 1

Date: February 2nd, 2026

To: All Interested Parties

From: Alessia Bencomo, Procurement Specialist
Village of Palmetto Bay
9705 E. Hibiscus Street
Palmetto Bay, Florida 33157

Re: Invitation to Bid No. 2026-11-002
SW 82nd Bike Lanes Improvements

This Addendum forms part of the Invitation to Bid (ITB) Package advertised on January 20th, 2026, and with a bid opening date of February 5th, 2026, with any amendments and/or additions noted below.

Question No. 1: When you have a chance can you send me the spec documents for this bid?

Response: *All documents can be found at SW 82nd Bike Lanes - DemandStar.*

Question No. 2: The plans for the bid mentioned above are not legible when I zoom in. Can we get a better copy? Or can I borrow the original set to have it scanned at a print shop?

Response: *Please be advised that I have uploaded another version of the engineering plans to OpenBids-DemandStar.*

Question No. 3: What is the budget or engineers estimate?

Response: *The Engineer's probable cost for this project is Two Hundred Eighty-Five Thousand Four Hundred Fifty Dollars and Zero Cents ($285,450.00) with a ten percent (10%) contingency included.*

Question No. 4: Do you have the bid docs for this opportunity? SW 82nd Bike Lanes.

Response: *Please be advised that I have uploaded another version of the engineering plans to OpenBids-DemandStar.*

Question No. 5: What is the engineer's estimate for the above-referenced project?

Response: *The Engineer's probable cost for this project is Two Hundred Eighty-Five Thousand Four Hundred Fifty Dollars and Zero Cents ($285,450.00) with a ten percent (10%) contingency included.*

Question No. 6: I would like to inquire about the licensing requirements for bidding on this project. Will an Underground Utilities & Excavation License from the state of Florida & Miami Dade County Paving Engineering Certificate of Competency meet the required qualifications?

Response: *Yes, this license would qualify for the scope of work on this project.*

Question No. 7: What is the size of the ADA Accessible Catch Basin Grate?

Response: *Please be advised that the bidder is recommended/suggested to evaluate the size as part of the bidder's due diligence/field assessment.*

Question No. 8: What is the estimated contract duration (number of calendar days) for the above-referenced project?

Response: *Six (6) months from Notice to Proceed (NTP).*

Question No. 9: Is there a possibility to close SW 82nd?

Response: *Daily closures in one direction will be allowed outside of peak times. MOT needs to be submitted for review.*

Question No. 10: Should the bike lanes be preformed or painted?

Response: *The bike lane markings need to follow FDOT Index 771-002, which specifies preformed thermoplastic.*

Question No. 11: In regards to the green bike lane, can FDOT approved green paint be used or do you require the installation of preform? If preform is required are there any specifications? (e.i Glass bead reflection)

Response: *The bike lane markings need to follow FDOT Index 771-002, which specifies preformed thermoplastic.*

Question No. 12: Do paver driveways need to be completely restored with new pavers or can we preserve existing pavers and reset?

Response: *Preserving existing pavers is allowed.*

Question No. 13: Do you have a designated staging area?

Response: *Proposed staging area should be provided with MOT submittal for our review.*

Question No. 14: Do we have to pay for permit fees?

Response: *Any permit fees paid will be reimbursed by the Village.*

Question No. 15: Will a certified arborist be needed to specify root pruning as roots encroach in the work limit area?

Response: *The Village has a certified arborist that will assist.*

Thank you,

ABencomo

Alessia Bencomo
Procurement Specialist

ACKNOWLEDGEMENT OF ADDENDUM SOLICITATION

Amendment/Modification No: 1

Amendment of ITB No: 2026-11-002

Title: SW 82nd Bike Lanes Improvements

Name of Contractor Homestead Concrete & Drainage, Inc

Date Addendum Received 02/02/2026

Total Pages of Addendum including Acknowledgement 3

Print Name Nelson Anolinario

Signature

HOMESTEAD CONCRETE & DRAINAGE INC CORPORATE SEAL 1981 FLORIDA

All other terms and conditions stipulated in the original Village of Palmetto Bay Invitation to Bid shall remain in force. All addenda created will be incorporated into the final contract and must be acknowledged in all bids. This acknowledgement form must be included in the response and failure to sign and submit this form may result in rejection of your bid.

Invitation to Bid
Village of Palmetto Bay
9705 East Hibiscus Street
Palmetto Bay, Florida 33157

TITLE:

SW 82nd Bike Lanes Improvements

ITB NO.:

2026-11-002

DUE DATE:

Thursday, February 5th, 2026 on or before 11:00 a.m. EST (Municipal Building)

ISSUED: **Tuesday, January 20th, 2026**

CONTACT PERSON:

Procurement Specialist
Alessia Bencomo
Finance Department – Procurement Division
abencomo@palmettobay-fl.gov

TABLE OF CONTENTS

SECTION 1.0 ADVERTISEMENT	3
SECTION 2.0 INTRODUCTION	4
SECTION 3.0 TERMS AND CONDITIONS	5 - 13
SECTION 4.0 SCOPES OF SERVICES	14 – 16
SECTION 5.0 BID SUBMISSION REQUIREMENTS	17
SECTION 6.0 EVALUATION AND SELECTION CRITERIA	18
SECTION 7.0 SCHEDULES OF EVENTS	19 - 20
SECTION 8.0 REQUIRED BID SUBMITTAL FORMS	21 - 41
SECTION 9.0 OTHER FORMS	42 - 56
SECTION 10.0 EXHIBITS	57 - 76
AGREEMENT	77
Exhibit "A": SW 82nd Bike Lanes Improvements Engineering Plans	78
Exhibit "B": SW 82nd Bike Lanes Improvements Drainage Memorandum	78

SECTION 1.0: Advertisement

INVITATION TO BID (ITB)
SW 82nd Bike Lanes Improvements
No. 2026-11-002

The Village of Palmetto Bay is seeking bids from a qualified Company to provide improvements to SW 82nd Bike Lanes. The Village will **receive sealed bids no later than 11:00 a.m.** on or before **Thursday, February 5th, 2026** (late submittals, email submittals, and facsimile submissions will not be accepted) **by the Village Clerk at the Municipal Center located at 9705 East Hibiscus Street, Palmetto Bay, Florida 33157**. All bids received will be publicly opened and read aloud on said date and time before the Procurement Specialist.

To be considered, all interested Parties must request copies of the bid documents and submit one (1) original and a flash drive containing a copy of the entire original submission in one (1) sealed package clearly marked with the bid titled "**SW 82nd Bike Lanes Improvements ITB# 2026-11-002**". **THE PACKAGE MUST BE CLEARLY LABELED TO THE ATTENTION OF THE VILLAGE CLERK, INCLUDING THE PACKAGE TITLE.** A bid guaranty in the amount of five percent (5%) of the bid must accompany each bid in accordance with the Invitation to Bid (ITB). The respondent shall bear all costs associated with the preparation and submission of the response to the solicitation.

A non-mandatory pre-bid meeting is scheduled for **Tuesday, January 27th, 2026, at 11:00 a.m.** at the Village Municipal Center at 9705 E. Hibiscus Street, Palmetto Bay, FL 33157. The bid documents may be obtained on or after **Tuesday, January 20th, 2026**. The bid document can be obtained by visiting our website www.palmettobay-fl.gov and by clicking Bids & RFP's. If you cannot download the documents please contact Alessia Bencomo, Procurement Division, abencomo@palmettobay-fl.gov.

No bid shall be withdrawn after the opening of the bid without the consent of the Village for a period of sixty (60) days after the scheduled time of opening and reading bids. The Village reserves the right to reject any and all bids or parts thereof, to terminate the process at any time, rebid the Project, waive any informalities, technicalities or irregularities, to disregard all non-conforming, conditional or counter-bids, to award in whole or in part to one or more respondents, or take any other such actions that may be deemed in the best interest of the Village.

SECTION 2.0: Introduction

VILLAGE OF PALMETTO BAY ("Village")

SW 82nd Bike Lanes Improvements (the "Project")

Construct bike lanes improvements project for the Village of Palmetto Bay (Invitation to Bid# 2026-11-002). The Project area is generally located along SW 82nd between SW 160th Street and SW 152nd Street. The Project shall include but not be limited to mobilization, maintenance of traffic, storm water pollution prevention, clearing and grubbing, minor roadway widening, pavement milling and resurfacing, concrete, swale regrading, sodding, pavement markings (temporary paint and thermoplastic), and site restoration throughout the Project area. All labor, equipment, and materials necessary to construct the improvements described by these Drawings and Project Specifications will be provided by the Company. Construction of this Project will require close coordination with the Village's Engineer and Public Services Director.

The Village may use state funding for this Project. In the event the Village's funding for this Project from the State is not appropriated or significantly reduced, the Village may terminate the Contract with written notice to the Company.

All bids must be on a Guaranteed Maximum Price (GMP) basis per the Bid Form.

SECTION 3.0: Terms and Conditions for Receipt of Bids

3.01 Requirement to Meet All Provisions

Each Company submitting a bid shall meet the terms and conditions of the ITB specifications package to the satisfaction of the Village. By virtue of the bid submittal, the Bidder acknowledges and agrees with and accepts all provisions of the ITB specifications. Terms used in these Instructions to Bidders which are defined in the Standard General Conditions of the Construction Contract, NSPE-ACEC Document 1910-8, CSI 56465 (1996 Edition) have the meanings assigned to them in the General Conditions. The term "Successful Bidder" means the lowest, responsive, qualified, responsible Bidder to whom the Village, on the basis of Owner's evaluation as hereinafter provided, makes an award and whose bid the Village determines is in the best interests of the Village.

3.02 Errors and Omissions in ITB

Bidders are responsible for reviewing all portions of this ITB, including all terms of the ITB and requirements of the Village's Procurement Code. Complete sets of Bidding Documents shall be used in preparing Bids; neither the Village nor the Engineer assumes any responsibility for errors or omissions resulting from the Bidder's review of the Bidding Documents. Bidders are to promptly notify the Village's Procurement Specialist, in writing, if the Bidder discovers any ambiguity, discrepancy, omission, or error in the ITB or required forms. Any such notification should be directed in writing promptly after discovery, but in no event later than six (6) calendar days prior to the date for receipt of bids. Modifications and clarifications will be made by addenda as provided below.

Examination of Site

3.02.1 Before submitting a Bid, each Bidder must (a) examine the Contract Documents, Project Specifications and Drawings thoroughly to its full satisfaction and have undertaken the responsibility to determine, within the scope of Bidder's competence as a licensed General Contractor, that the Project Specifications and Drawings are fit and proper for the performance of the Work and to the best of Bidder's knowledge are: (i) free from material errors, omissions, and/or inconsistencies; and (ii) are in compliance with applicable laws, statutes, building codes, ordinances, rules and regulations; recognizing however, that a Bidder is not responsible for the design of the Project; (b) visit the site to become familiar with local conditions that may in any manner affect cost, progress or performance of the Work; (c) examine the Project Site to its full satisfaction, including any existing work or improvements in place, and have determined that the same are fit and proper to receive the Work in their present condition and a Bidder waives all claims that they are not in compliance with all data and information with respect to the Project as specified in the Drawings and Project Specifications and/or as provided by Owner and Engineer; (d) familiarize itself with federal, state and local laws, ordinances, rules, policies, and regulations that may in any manner affect cost, progress or performance of the Work; (e) study and carefully correlate Bidder's observations with the Contract Documents; and (f) at Bidder's own expense, make or obtain any additional examinations, investigations, explorations, tests and studies, and obtain any additional information and data which pertain to the physical conditions including but not limited to surface, sub-surface and underground facilities at or contiguous to the Project site or otherwise which may affect cost, progress, performance or furnishing of the Work and which Bidder deems necessary to determine for its Bid for performing and furnishing the

Work in accordance with the time, price and other terms and conditions of the Contract Documents.

3.02.2 Reference is made to the Supplementary Conditions for the identification of those reports of investigations and tests of subsurface and latent physical conditions at the site or otherwise affecting cost, progress or performance of the Work which have been relied upon by Engineer in preparing the Drawings and Specifications. The Village will make copies of such reports available to any Bidder requesting them. These reports are not guaranteed as to accuracy or completeness, nor are they part of the Contract Documents. Before submitting the Bid, each Bidder will, at its own expense, make such additional investigations and tests as the Bidder may deem necessary to determine his Bid for performance of the Work in accordance with the time, price and other terms and conditions of the Contract Documents.

3.02.3 On request, the Village will provide each Bidder access to the site to conduct such investigations and tests as each Bidder deems necessary for submission of its Bid.

3.02.4 The property upon which the Work is to be performed, includes rights-of-way for access thereto and other property designated for use by Contractor in performing the Work, are identified in the Supplementary Conditions, General Conditions Drawings.

3.02.5 The submission of a Bid will constitute a binding representation by the Bidder that he has complied with every requirement of the Contract Documents and that the Contract Documents are sufficient in scope and detail to indicate and convey understanding of all terms and conditions for performance of the Work.

3.03 Inquiries Regarding ITB

Inquiries regarding the ITB, including requests for clarification of the ITB, must be in writing. With respect to questions about the meaning or intent of the Project Specifications or Drawings, all questions shall be submitted in writing to the Village within seventy-two (72) hours after the receipt of the Project Specifications or Drawings. Failure to submit written questions regarding the Project Specifications or Drawings must be made within seventy-two (72) hours of receipt of the Project Specifications or Drawings shall constitute a waiver of all claims associated therewith.

All inquiries shall only be directed to:

Alessia Bencomo
Procurement Specialist
Finance Department
9705 E. Hibiscus Street
Palmetto Bay, FL 33157
Email: abencomo@palmettobay-fl.gov

Oral information is not binding, or the Bidder shall be deemed to have waived all claims regarding the Project. Only questions answered by written addenda will be binding, as set forth in 3.04 below, and may supersede terms in this solicitation. Replies will be issued by Addenda mailed or delivered to all Parties recorded by the Village as having received the bidding documents.

Inquiries must be received by Monday, February 2nd, 2026, no later than 3:00 p.m. The Addendum will be posted by Monday, February 2nd, 2026, no later than 5:00 p.m. on DemandStar.

3.04 Addenda to ITB

The Village may modify or clarify the ITB, prior to the submittal due date, by issuing written addenda. Addenda will be sent via email to the last known address of each Company having received a copy of the ITB for bidding purposes. The Village will make reasonable efforts to notify bidders in a timely manner of modifications to the ITB. Notwithstanding this provision, bidders shall be responsible for ensuring that its submittal reflects any and all addenda issued by the Village prior to the submittal due date regardless of when the bid is submitted. Each bidder should acknowledge receipt of any addenda by so indicating in their bid submission. Each bidder acknowledges receipt of any addenda and is responsible for the contents of the addenda and any changes made to the bid. Failure to acknowledge any addenda may cause the bid to be rejected.

3.05 Bid Withdrawal and Opening

A Bidder may withdraw its bid, without prejudice prior to the time specified for the bid opening, by submitting a written request to the Village Clerk for its withdrawal, in which event the proposal will be returned unopened. No bid can be withdrawn within the ninety (90) day period which occurs after the time is set for the bid closing. A bidder who withdraws its bid prior to the ninety (90) day period may still submit another bid if done in accordance within the proper time frame. If the bidder chooses to withdraw their bid after the bidder has been granted the award, there will be fees and costs owing to the Village that will be incurred as a violation of late withdrawal. Fees will include out of pocket costs that the Village incurred through the process of approval. All bids will be opened and declared publicly. A bidder and/or its representative are invited to be present at the opening of the bid.

3.06 Revision of Bids

At any time during the submittal evaluation process, the Village may require a bidder to provide written clarification of its submittal.

3.07 Reservations of Rights by the Village

The issuance of this ITB does not constitute an agreement by the Village that any award will be issued by the Village. The Village expressly reserves the right at any time to:

- Waive or correct any defect or informality in any response, bid, or bid procedure;
- Reject any or all submittals;
- Reissue an ITB;
- Prior to submission deadline for submittals, modify all or any portion of the selection procedures, including deadlines for accepting responses, services to be provided under this ITB, or the requirements for contents or format of the submittals;
- Bids received after the deadline will not be considered.
- Any late withdrawal from a bidder that was granted award but declined, the Village has the right to award to the second highest bidder.

3.08 No Waiver

No waiver by the Village of any provision of this ITB shall be implied from any failure by the Village to recognize or act on account of any failure by a bidder to observe any provision of this ITB.

3.09 Cone of Silence

Pursuant to Section 2-138 of the Village Code, all procurement solicitations once advertised and until a written award recommendation has been forwarded by the Village Manager to the Village Council, are under the "Cone of Silence." The Cone of Silence ordinance is available at https://www.municode.com/library/#!/fl/palmetto_bay/codes/code_of_ordinances?nodeId=COOR_CH2AD_ARTVOFEM_DIV2COINCOET_S2-138COSI. Any communication regarding this bid shall be made in accordance with the Cone of Silence, the entirety of which is incorporated as if fully set forth herein. Communication between a potential bidder and the Procurement Specialist regarding this bid is exempt from the Cone of Silence, provided that the communication is limited strictly to matters of process or procedure already contained in the solicitation document.

3.10 Submittal and/or Presentation Costs

The Village assumes no responsibility or liability for costs incurred by the bidder prior to the execution of a contract, including but not limited to costs incurred as a result of preparing a response to this ITB.

Bidders are expected to examine the specifications, delivery schedules, bid prices and extensions and all instructions and failure to do so will be at the bidders own risk.

3.11 Certification

The bidder must sign all the required forms included under Section 8.0:

1. Drug-Free Workplace Certification
2. Sub-contractor List
3. Governmental References
4. Acknowledgment, Warranty, and Acceptance
5. Non-Collusive Affidavit
6. Sworn Statement on Public Entity Crimes
7. Disability Nondiscrimination Statement
8. Business Entity Affidavit
9. Conformance with OSHA Standards
10. Anti-Kickback Affidavit
11. Statement of Past Contract Disqualifications
12. E-Verify Affidavit
13. Foreign Country of Concern Attestation
14. Affidavit Attesting to Noncoercive Conduct for Labor or Services

3.12 Public Records

Florida law provides that municipal records should be open for inspection by any person under Chapter 119, Florida Statutes, the Public Records law. All information and materials received by the

Village in connection with responses shall become property of the Village and shall be deemed to be public records subject to public inspection after the award is issued.

3.13 Retention of Responses

The Village reserves the right to retain all Responses submitted.

3.14 Insurance

1. Upon Village's notification of award, the bidder shall furnish to the Procurement Division, Certificates of Insurance that indicate that insurance coverage has been obtained which meets the requirements as outlined below; **and name the Village as an additional insured.**

- Comprehensive General Liability - $1,000,000 combined single limit for each occurrence for bodily injury and property damage – designating the Village as Additional Insured
- Workers Compensation - Statutory Limits
- Automobile Liability - $1,000,000 per occurrence for all claims arising out of bodily injuries or death and property damages.

All insurance policies must be issued by companies authorized to do business under the laws of the State of Florida. The companies must be rated no less than "B+" as to management and no less than "Class V" as to strength by the latest edition of Best's Insurance guide, published by A.M. Best Company, Oldwick, New Jersey, or its equivalent.

Certificates of Insurance must indicate that for any cancellation of coverage before the expiration date, the issuing insurance carrier will mail a thirty (30) day written advance notice to the certificate holder.

In addition, the Company hereby agrees not to modify the insurance coverage without thirty (30) day written advance notice to the Village subject to the Village's approval.

Compliance with the foregoing requirements shall not relieve the bidder of this liability and obligation under this section or under any other section in the Contract.

If the insurance certificate is received within the specified time frame but not in the manner prescribed, the bidder shall be notified of such deficiency and shall have an additional five (5) calendar days to submit a corrected certificate to the Village. If the bidder fails to submit the required insurance documents in the manner prescribed in the Contract within five (5) calendar days after Village notification to comply, the bidder shall be in default of the contractual terms and conditions and award of the Contract will be rescinded, unless such time frame for submission has been extended by the Village.

The bidder shall be responsible for assuring that the insurance certificates required in conjunction with this Section remain in force for the duration of the contractual period of the Contract, including any and all option years or extension periods that may be granted by the Village. If insurance certificates are scheduled to expire during the contractual period, the bidder shall be responsible for submitting new or renewed insurance certificates to the Village at a minimum of thirty (30) calendar

days in advance of such expiration. In the event that expired certificates are not replaced with new or renewed certificates which cover the contractual period, the Village shall suspend the Contract until such time as the new or renewed certificates are received by the Village in the manner prescribed herein; provided, however, that this suspended period does not exceed thirty (30) calendar days. Thereafter, the Village may, at its sole discretion, terminate this contract.

3.15 Accounting

Please note that failure to provide a detailed invoice could result in delay of payment and include termination of any Contract.

Invoices, unless otherwise indicated, must show purchase order number, and shall be submitted to the Village of Palmetto Bay, Public Services Department, 9495 SW 180th Street, Palmetto Bay, FL 33157.

3.16 Statement of Contract Disqualifications

Each bidder shall submit a statement regarding any past government disqualifications on the form provided in the ITB package.

3.17 Submittal of One Bid Only

No individual or business entity shall be allowed to make more than one bid, or to be interested in more than one bid.

3.18 Exceptions to Specifications

Exceptions to these specifications shall be listed and explained on a separate page titled "Exceptions to Specifications". This page shall then be attached and submitted at the same time as the bid. Each exception must refer to the page number and paragraph to which it is relevant. The nature and reasoning of each exception, including what, if any, alternative is being offered, shall be explained in its entirety. The Village, at its sole and absolute discretion, may accept or reject any or all exceptions and alternatives. Where exceptions and alternatives are rejected, the Village shall require the bidder to comply with the particular term and/or condition of the bid to which the bidder took exception. Failure to comply may be cause for rejection of the bid.

3.19 Non-Appropriation of Funds

The Village reserves the right to terminate in whole or in part the Contract in the event that sufficient funds to complete the Contract are not appropriated by the Village.

3.20 Property of the Village

All discoveries and documents produced as a result of any service or project undertaken on behalf of the Village shall become the property of the Village.

3.21 Contract Time

The number of days within which, or the date by which, the Work is to be completed is included in the Contract. Time is of the essence regarding all terms and conditions in the Contract.

3.22 Liquidated Damages

The bidder and the Village recognize that time is of the essence of this Contract and that the Village will suffer financial loss and other damages if the Work is not substantially or finally complete within the time specified in the Contract. The bidder also recognize the expense and difficulties involved in a legal or arbitration proceeding. The bidder acknowledges and agrees that the actual damages which the Village will suffer in the event of delay in achieving Substantial Completion or Final Completion of the Work are difficult, if not impossible, to determine and that the liquidated damages described are a fair and reasonable estimate of the delay damages which the Village is expected to suffer in the event of such delay. Accordingly, as actual damages cannot be ascertained, the bidder and the Village agree that as liquidated damages for delay, but not as a penalty, the bidder shall pay the Village the amount of One Thousand and 00/100 Dollars ($1,000.00) for each day after the time specified in the Documents for Substantial Completion until the Work is substantially complete.

Liquidated damages shall be deducted from the bidder's applications for payment. However, if at the time of the bidder's final application for payment, the bidder is owed insufficient amounts to fully cover the deduction for liquidated damages, then the bidder shall pay the amount due within ten (l0) days of written demand by the Village.

3.23 Litigation

Bidders shall describe any prior or pending litigation or investigation, either civil or criminal, involving a governmental agency or which may affect the performance of the services to be rendered in which the bidder, any of its employees, or subcontractors has been involved in within the last three (3) years.

3.24 Subcontractors

If the bidder intends on Subcontracting out all or any portion of the of the Project, the name of the proposed Subcontracting companies must be clearly disclosed in the bid. Following the award of the contract, no additional sub-contracting will be allowed without the prior written consent of the Village.

In order that the Village may be assured that only qualified and competent Subcontractors will be employed on the Project, each Bidder shall submit with the Bid a list of the Subcontractors who will perform the work for each division of the Project Specifications as indicated on the "List of Subcontractors" form contained within the Bid Form. The Bidder shall have determined to its own complete satisfaction that a listed Subcontractor has been successfully engaged in its particular type of business for a reasonable length of time, has successfully completed installations comparable to that which is required by the Contract Documents and is qualified both technically and financially to perform that pertinent phase of the Work for which it is listed. Only one Subcontractor shall be listed for each division of the Work. The "List of Subcontractors" shall be accompanied by an experience statement with pertinent information as to similar projects and other evidence of qualification, with all applicable licenses, registration or certification numbers noted on the Bid Form opposite its name for each such Subcontractor, person, and organization. No change shall be made to the "List of Subcontractors" after submission of the Bid, unless agreed to in writing by the Village. The Village may make a determination regarding the responsibility and qualifications of each Subcontractor. To demonstrate qualifications to perform the Work, each Subcontractor must be

prepared to submit, within five (5) days of Village's request, written evidence of the types set forth in the Request for Letter of Interest, such as financial data, previous experience, licensing, certification, and evidence of authority to conduct business in the Village. If the Village after due investigation has reasonable objection to any proposed Subcontractor the Village before giving the Notice of Intent to Award, shall request the apparent successful bidder to submit an acceptable substitute without an increase in the Bid Price. If the apparent successful bidder declines to make any such substitution, the Contract shall not be awarded to such bidder and the Bid Guaranty of that bidder shall be forfeited. Any Subcontractor so listed and to whom the Village does not make written objection prior to the giving of the Notice of Intent to Award will be deemed acceptable. Failure to provide the "List of Subcontractors" shall result in the bid being deemed non-responsive.

If the Contract Price is on the basis of Cost-of-the-Work Plus a Fee or GMP, the eventual successful bidder, prior to the Notice of Intent to Award, shall identify in writing those portions of the Work that such bidder proposes to subcontract and after the Notice of Intent to Award may only subcontract other portions of the Work with the Villages written consent.

3.25 Indemnification

The bidder shall indemnify, defend and hold harmless the Village and its officers, employees, agents and instrumentalities from any and all liability, losses or damages, including attorneys' fees and costs of defense at both trial and appellate levels, in which the Village or its officers, employees, agents or instrumentalities may incur as a result of claims, demands, suits, causes of actions or proceedings of any kind or nature arising out of, relating to or resulting from the performance of this Contract by the bidder or its employees, agents, servants, partners, principals or subcontractors. The bidder shall pay all claims and losses in connection therewith and shall investigate and defend all claims, suits or actions of any kind or nature in the name of the Village, and shall pay all costs, judgments, and attorney's fees at both trial and appellate levels which may issue as a result of the bidder's negligence. The bidder expressly understands and agrees that any insurance required by this Contract or otherwise provided by the bidder shall in no way limit the responsibility to indemnify, hold harmless and defend the Village or its officers, employees, agents, and instrumentalities. One Percent (1%) of the Contract amount shall represent the consideration to be provided for this Indemnification. Nothing contained herein shall be deemed a waiver of Sovereign Immunity provided to the Village under Section 768.28, Florida Statutes.

3.26 Quality

All materials used for the manufacture or construction of any supplies, materials or equipment covered by this ITB shall be new and be the latest model, of the best quality, and of the highest-grade workmanship. The Proposer, in addition to any warranties provided by the manufacturer of the materials, shall provide warranties of **MERCHANTIBILITY AND FITNESS FOR A PARTICULAR PURPOSE.**

3.27 Protests, Appeals and Disputes

The procedures and requirements for bid protests, appeals and disputes are set forth in the Village Code, Sec. 2-175 (o) – (p), the provisions of which are hereby incorporated as if fully set forth herein, which may be found on www.municode.com:

https://www.municode.com/library/#!/fl/palmetto_bay/codes/code_of_ordinances?nodeId=COOR_CH2AD_ARTVIFI_DIV2PRCO_S2-175PRPR

3.28 Force Majeure

The performance of any act by the Parties may be delayed or suspended at any time while, but only so long as either Party is hindered in or prevented from performance by acts of God, the elements, war, rebellion, strikes, lockouts or any cause beyond the reasonable control of such Party, provided however, the Village shall have the right to provide substitute service from third parties or Village personnel and in such event the Village shall withhold payment due for such period of time. If the condition of force majeure exceeds a period of fourteen (14) days the Village may, at its option and discretion, cancel or renegotiate the Contract.

3.29 Work Delays

Should the work be obstructed or delayed required to be done by approved changes in the work or by any default, act, or omission of the Village, or by strikes, fire, earthquake, hurricane, or any other Act of God, or by the inability to obtain materials, equipment, or labor due to local, State or federal government restrictions, then the time of completion may, at the Village's sole option, be extended for such periods as may be agreed upon by the Parties. In the event that there is insufficient time to grant such extensions prior to the completion date of the Contract, the Village Manager may, at the time of acceptance of the work, waive liquidated damages that may have accrued for failure to complete on time, due to any of the above.

3.30 Bid Guaranty

The bid must be accompanied by a bid guaranty in the form of a certified check payable to the Village of Palmetto Bay or a Bid Bond (form attached) in the amount of not less than five percent (5%) of the total amount of the bid, issued by a properly licensed surety company. For contracts not exceeding fifty thousand dollars and zero cents ($50,000.00) a bid guaranty is not required.

The Bid Guaranty will be retained until the Parties have executed the Contract and furnished the required Contract Security, whereupon it will be returned; if the successful bidder fails to execute, deliver and furnish the required guaranty within fifteen (15) days of the Notice of Intent to Award, Village may annul the Notice of Intent to Award and the Bid Security of that Bidder shall be forfeited.

3.31 PERFORMANCE AND PAYMENT BONDS

Within ten (10) days of the award of contract, there shall be placed surety bonds, each in the amount of One Hundred percent (100%) of the contract price, and issued by a properly licensed surety company acceptable to the Village. All bonds must be issued by an agent of broker licensed in the State of Florida and authorized to do business under the laws of the State of Florida. The bonds should provide that the surety's liability will be co-extensive with the Contractor's liability, and should contain a provision that the surety waives notice of changes to the contract, including, but not limited to, changes in the times for performance. For contracts not exceeding fifty thousand dollars and zero cents ($50,000.00) a surety bond is not required.

a. A Performance and One-Year Warranty Bond covering the faithful performance of the contract and a one-year warranty on labor from the date of final acceptance of the work.
b. A Labor Payment Bond

SECTION 4.0: Scope of Services

4.01 Scope of Work

The undersigned, as Bidder, hereby declares that the only persons, company, or parties interested in the Bid or the Contract to be entered into, as principals, are named herein; and that this Bid is made without connection with any other person, company, or parties making a Bid; and that it is in all respects fair and in good faith without collusion or fraud.

The Bidder has carefully and to his full satisfaction examined any and all information the Bidder deems necessary to submit this bid, including but not limited to, the attached Instructions to Bidders, General Conditions, Supplementary Conditions, Technical Specifications, and Contract and Bonds, together with the accompanying Drawings, Project Specifications and has read all addenda issued prior to the opening of bids; that a full examination of the location of the proposed Work has been made and agrees to furnish, unless otherwise provided, all implements, machinery, equipment, transportation, tools, materials, supplies, labor, and other things necessary to the prosecution and completion of the Work generally described as follows:

Construct bike lanes improvements for the Village of Palmetto Bay (Invitation to Bid# 2026-11-002). The Project area is generally located along SW 82nd Avenue between SW 160th Street and SW 152nd Street. The Project shall include but not be limited to mobilization, maintenance of traffic, storm water pollution prevention, clearing and grubbing, pavement milling and resurfacing, concrete, swale regrading, sodding, pavement markings (temporary paint and thermoplastic), minor roadway widening, and site restoration throughout the Project area. All labor, equipment, and materials necessary to construct the improvements described by these Drawings and Project Specifications will be provided by the Company. Construction of this Project will require close coordination with the Village's Engineer and Public Services Director.

It is proposed that the Project shall be constructed for the Total Guaranteed Maximum Price based on the Contract Unit Prices in this Bid, all in accordance with the requirements and provisions of the Contract Documents. The Village at its sole discretion shall award this Contract based on the Guaranteed Maximum Price.

4.1:
BID FORM

The following Bid Form is presented to assist the Village in evaluating the bid. This Bid Form reflects estimated quantities for the Total Bid as described above. After award, the Village reserves the right to modify estimated quantities subject to the unit price and eliminate line items if necessary. Payment shall be made for the items listed on the Bid Form on the basis of the Work actually performed and completed.

Item No.	Description	Unit	Quantity	Unit Price	Total
1	Mobilization	LS	1	$4,875.90	$ 4,875.90
2	Maintenance of Traffic	LS	1	$10,726.98	$ 10,726.98
3	Storm Water Pollution Prevention Plan	LS	1	$4,875.90	$ 4,875.90
4	Site Restoration and Tie-In Grading	LS	1	$9,751.80	$ 9,751.80
5	Asphalt, SP-9.5, 1.5" Average Depth	SY	2200	$ 21.94	$ 48,268.00
6	Stabilized Subgrade, 12" Thick	SY	2200	$ 19.50	$ 42,900.00
7	Limerock Base, 8" Thick	SY	2200	$ 24.38	$ 53,636.00
8	Remove Existing Concrete, Asphalt, and Pavers	SY	930	$ 26.33	$ 24,486.90
9	ADA Accessible Catch Basin Grate	EA	1	$3,510.65	$ 3,510.65
10	Utility Fixture, Valve Assembly, Adjust/Modify	LS	1	$2,925.54	$ 2,925.54
11	Mailbox Relocation	EA	1	$1,950.36	$ 1,950.36
12	Sign Relocation	EA	2	$ 487.59	$ 975.18
13	Sign and Post	EA	6	$609.49	$ 3,656.94
14	Concrete Sidewalk (6" thick max) (Sidewalk, Driveway, and Apron)	SY	190	$ 82.89	$ 15,749.10
15	Paver Driveway Restoration	LS	1	$6,094.87	$ 6,094.87
16	Pavement Marking	LS	1	$58,520.88	$ 58,520.88
				GRAND TOTAL	$ 292,905.00

Refer to pay item notes within contract plans for details of costs to be included within items.

The following Bid Item Notes apply to the bid items:

1. Bid Item 1 is a lump sum pay item for all mobilization costs and includes the construction of two (2) project signs that shall be displayed at approaches to the project area. The intent is that the sign will be freestanding. The sign shall display on both sides the project name, Village Logo, elected officials, and contact information. A detail of the sign is included in the plans. Shop drawings must be submitted for approval prior to ordering the project sign. Photos of the actual project sign must be submitted for approval prior to installation of the project signs.

   Mobilization will be paid at the following rates:
   a. 10% of contract completion - 25% of Mobilization.
   b. 25% of contract completion - 50% of Mobilization.
   c. 50% of contract completion - 100% of Mobilization.

2. Bid Item 2 is a lump sum pay item for a Maintenance of Traffic (MOT) and includes all pedestrian access maintenance. All crosswalks and sidewalks shall remain open and free of obstructions. Temporary painting for roadways and crosswalks shall be maintained throughout the project. Costs shall include the use of flagmen. Contractor to prepare and submit for review a MOT Plan per phase of construction. The MOT plan shall be prepared by an FDOT certified individual. No work shall begin until the MOT plan has been approved by the Village.
3. Bid Item 3 to include a complete stormwater pollution prevention plan (SWPPP). Notice of Intent fees and compliance with any SWPPP reporting. Include furnishing, installation, maintenance, and removal of items. This is a lump sum pay item to furnish, install, maintain, and remove floating turbidity barriers.
4. Bid Item 4 is a lump sum pay item for site restoration which includes the complete restoration of the roadway or driveways impacted by any construction activity adjacent to the roadway resurfacing project including but not limited to mobilization, clearing, and grubbing, striping removal, milling and resurfacing, asphalt, limerock, and base removal, limerock rework, asphalt overlay, utility adjustments, mailbox relocations, etc. Any swale areas impacted by the contractor outside of those indicated on the plans will be restored by the contractor at no additional cost to the Village. The pay item includes but is not limited to sod, landscaping, trees, excavation, new fill, limerock base preparation, grading, tamping, irrigation, driveway aprons (asphalt, pavers, stamped concrete, etc.), sidewalks, mailboxes, fences, pipes, curbs, etc. to an equal or better condition prior to construction. The contractor shall include the costs associated with a preconstruction video to confirm existing conditions. Any damage not confirmed by preconstruction video will be repaired at no additional cost to the Village.
5. Bid Item 5 includes the asphalt final overlay to the extents shown on the plans or lift of asphalt (minimum 1.5") to final grade. Pavement overlay to provide smooth and continuous grading through the entire asphalt overlay process to avoid areas of standing water. This item also includes the final lift of asphalt over all trench restoration.
6. Bid Item 6 and 7 include all costs associated with the stabilized subgrade and limerock base.
7. Bid Item 8 includes all costs associated with removal and disposal of existing concrete, asphalt, and pavers and includes saw cutting.
8. Bid Items 9 includes all costs associated with the installation of ADA accessible catch basin grates.
9. Bid Item 10 includes all costs associated with valve adjustments.
10. Bid Item 11 includes all costs associated with the relocation of existing mailboxes as needed.
11. Bid Item 12 includes all costs associated with the relocation of existing signs.
12. Bid Item 13 includes all costs associated with new signs and their installation.
13. Bid Item 14 includes all costs associated with installing concrete pavements to include concrete sidewalks, driveways, and aprons up to 6" thick.
14. Bid Item 15 includes all costs associated with the restoration of paver driveways. Contractor is responsible of replacing pavers in the case that pavers break.
15. Bid Item 16 is a lump sum pay item for pavement marking which includes all costs associated with, thermoplastic pavement markings, including temporary pavement markings prior to thermoplastic, and reflective pavement markers (RPMs).

Total Bid Amount..... $ 292,905.00

Total Bid Amount (in words): two hundred ninety two thousand nine hundred and five dollars with zero cents

Signature of Official: Chris Headley

Name: Christopher Headley

Title: VP

Company: Headley Construction Group Inc.

Date: 1/30/26

Section 5.0: Bid Submission Requirements

BID SUBMITTAL CHECKLIST

In order to be responsive, the bidder must submit the following items:

A. **One (1) sealed envelope which includes:** One (1) original and a flash drive of your submittal no later than 11:00 a.m. EST February 5th, 2026.

Please be sure that if the package is mailed through FedEx, UPS, USPS, etc., that the package is addressed/labeled to the below department and address. The bid inside the package should also be addressed/labeled to the below department and address.

Village of Palmetto Bay
Village Clerk's Office
9705 E. Hibiscus Street
Palmetto Bay, FL, 33157

B. **Signed and completed forms from *Section 8*:**

Introduction letter with contact information
Years in Business
Lead team Information
Bid Form
5% Bid Bond
Section 8 (Required Bid Submittal Forms)
Addendum Acknowledgement

C. **Bidders are required to acknowledge receipt of any formal Addendum by signing the Addendum and including it with the bid submission.** A Bidder's failure to include a signed formal Addendum in its bid submission may deem its bid non-responsive.

SECTION 6.0: Evaluation and Selection Criteria

Evaluation Criteria

EVALUATION OF BIDS/BIDDERS

The Village reserves the right to accept any bid, any part, or parts thereof, or to reject any and all bids. The Village reserves the right to waive minor informalities or irregularities in the bids received, to accept any bid deemed advantageous to the Village, or to reject any and all bids submitted. Conditional bids, or those which take exception to the ITB documents without prior written approval from the Village, may be considered non-responsive and may be rejected.

Award of the Contract is subject to Village Council approval. Other aspects of approval are experience, capability, necessary facilities, and financial resources to complete the Contract in a satisfactory manner within the required time.

The Village has the right during the evaluation to contact bidders for additional essential information to complete their examination.

SECTION 7.0: Schedule of Events

The anticipated schedule for selection of Company is shown below:

Bid Phase	Date	Location	Time (If Applicable)
ITB is advertised and issued by Village	Tuesday, January 20th, 2026	Posted on the Miami's Community Newspaper and Villages' Website	
Non-Mandatory Pre-Bid Meeting	Tuesday, January 27th, 2026	Village of Palmetto Bay Municipal Center 9705 E. Hibiscus St, Palmetto Bay, FL 33157	11:00 a.m.
Last day to Submit Questions	Monday, February 2nd, 2026	Via Email to abencomo@palmettobay-fl.gov	3:00 p.m.
Addendum Posting	Monday, February 2nd, 2026	Posted on DemandStar	5:00 p.m.
Bid Submission Date	Thursday, February 5th, 2026	Village of Palmetto Bay Municipal Center **ATTENTION TO THE VILLAGE CLERK** 9705 E. Hibiscus Street Palmetto Bay, Florida 33157	11:00 a.m.

7.01 Contract Award

A. Competency and Responsibility of Company
The Village reserves full discretion to determine the competence and financial status, of the bidder. The bidder will provide, in a timely manner, all information that the Village deems necessary to make such a decision.

B. Contract Requirement
The bidder to whom award is made shall execute a written Contract with the Village after notice of award. The Contract shall be made in the form adopted by the Village Attorney and a draft is included in this Request.

C. Insurance Requirements
The bidder shall provide proof of insurance in the form, coverages and amounts specified in 3.14 of these specifications within ten (10) calendar days after notice of Contract award as a precondition to Contract execution.

D. Business License & Tax
The bidder must have a valid Florida issued business license and tax certificate before execution of the Contract.

E. Failure to Accept Contract

The following will occur if the bidder to whom the award is made fails to enter into the Contract: the award will be annulled; any bid security will be forfeited in accordance with the special terms and conditions if a bidder's bond or security is required; and an award may be made to the next highest ranked bidder with a responsible compensation is negotiated, who shall fulfill every stipulation as if it were the party to whom the first award was made.

F. Completion of Contract

The Contract term commences after the Contract has been fully executed and the completion date is determined after all the scope of the project and the Bid Form have been completed.

HEADLEY CONSTRUCTION GROUP

8240 SW 186th Street · Cutler Bay, FL 33157
Phone: 305-498-2327 · Email: Thomas@headleycg.com

Date: February 3, 2026

To: Village of Palmetto Bay – Procurement Department

Re: Instruction Letter
ITB No.: ITB-2026-11-002-0-2026/AB
Project: SW 82nd Avenue Bike Lanes

Headley Construction Group Inc. (HCG) is pleased to submit our bid for the Village of Palmetto Bay's SW 82nd Avenue Bike Lanes project under ITB-2026-11-002-0-2026/AB.

Headley Construction Group Inc. is a Florida-licensed civil and utility contractor with five (5) years in business, specializing in municipal infrastructure improvements including roadway work, drainage, concrete, sidewalks, bike lanes, pavement markings, and associated restoration. Our firm has successfully completed public-sector projects throughout Miami-Dade and Broward Counties in compliance with municipal standards, schedules, and safety requirements.

Company Information

Company Name: Headley Construction Group Inc.
Qualifier / President / Project Manager: Thomas Headley
Florida License No.: E2100146

Lead Project Team

Thomas Headley – President / Qualifier / Project Manager
Responsible for overall project oversight, contract administration, scheduling, coordination with Village staff, and compliance with all contract requirements.

Jorge Arzate – Site Superintendent
Responsible for on-site supervision, safety enforcement, quality control, daily field operations, and coordination with inspectors.

Headley Construction Group Inc. has reviewed the bid documents in their entirety and understands the scope, requirements, and expectations associated with this project. We are confident in our ability to perform the work in accordance with the Village of Palmetto Bay's standards and within the required schedule.

Sincerely,

Thomas Headley
President / Qualifier / Project Manager

Headley Construction Group Inc.

SECTION 8.0: Required Bid Submittal Forms

DRUG-FREE WORKPLACE CERTIFICATION

In order to have a drug-free workplace program, a business shall:

1) Publish a statement notifying employees that the unlawful manufacture, distribution, dispensing, possession, or use of a controlled substance is prohibited in the workplace and specifying the actions that will be taken against employees for violations of such prohibition.
2) Inform employees about the dangers of drug abuse in the workplace, the business' policy of maintaining a drug-free workplace, any available drug counseling, rehabilitation, and employee assistance programs, and the penalties that may be imposed upon employees for drug abuse violations.
3) Give each employee engaged in providing the commodities or contractual services that are under proposal a copy of the statement specified in Subsection (1).
4) In the statement specified in Subsection (1), notify the employees, that, as a condition of working of the commodities or contractual services that are under proposal, the employee will abide by the terms of the statement and will notify the employee of any conviction of, or plea of guilty or nolo contendere to, any violation of Chapter 893 or of any controlled substance law of the United States or any state, for a violation occurring in the workplace no later than five (5) days after such conviction.
5) Impose a sanction on, or require the satisfactory participation in a drug abuse assistance or rehabilitation program, if such is available in the employee's community, by any employee who is so convicted.
6) Make a good faith effort to continue to maintain a drug-free workplace through implementation of this section.

As the person authorized to sign the statement, I certify that this Company complies fully with the above requirements.

Signature of Official: Chris Headley

Name (typed): Christopher Headley

Title: VP

Company: Headley Construction Group Inc.

Date: 1/28/26

SUBCONTRACTOR LIST

The Company shall list all proposed Subcontractors to be used on this project if they are awarded the Contract.

Classification of Work	Subcontractor Name	Address	Telephone and Fax
Striping	E & A Express striping Corp	11751 SW 31st Terr Miami, FL 33175	786-273-0335
Milling	C & R Milling & Paving	1 N Krome Ave Homestead, FL 33030	305-247-0833
Paving ~~Dallier Asfalto LLC~~	Dallier Asfalto LLC	14795 Coolidge Ln Homestead, FL 33033	786-234-3015

REFERENCES

Each bid must be accompanied by a list of at least ***three (3)*** references from current customers, preferably in the public sector, which shall include all the information requested below. **The Village should not be listed as one of the references provided.**

VILLAGE OF PALMETTO BAY - REFERENCE FORM

Solicitation Information: SW 82nd Bike Lanes Improvements
Invitation to Bid No. 2026-11-002

Name of Company: Headley Construction Group Inc.

To Whom it May Concern,
The above reference vendor is submitting on a proposal solicitation or use of bid that has been issued by the Village of Palmetto Bay. We require that the consultant provide written references with their proposal submission and by providing you with this document the vendor is requesting that you provide the following reference information. We would appreciate you providing the information requested below as well as any other information you feel is pertinent:

Contracted Services Information:

Scope of Work: Removal of existing concrete, Concrete Sidewalk and Driveways installation, SOD, installation of Drainage Structure, Trench, Pipes and Storm Manhole

Initial Value of Contract: $107,265.00 Final Value of Contract: $121,513.25

Length of Contract: 3 months

Would you enter into a contract with the Company in the future? X Yes ____ No

Were the services provided acceptable and of quality standards: X Yes ____ No

Was the Company responsive to your requests and resourceful with the task? X Yes ____ No

Did the Company keep you fully informed of any updates and/or concerns related to the contracted services?

X Yes ____ No

If you responded no to any of the above please provide details:

Comments:

We look forward to working again with them in the future.

Name of Public Entity/Company: Village of Pinecrest/ Dept. of Public Works

Name of Individual completing this form: David J. Mendez, P.E.

Signature: _____ Title: Director of Public Works

Telephone: (305) 669-6916 Email: Dmendez@pinecrest-fl.gov

Thank you for your support in helping us evaluate our solicitation responses.

Sincerely,
Alessia Bencomo, Procurement Specialist

REFERENCES

Each bid must be accompanied by a list of at least ***three (3)*** references from current customers, preferably in the public sector, which shall include all the information requested below. **The Village should not be listed as one of the references provided.**

VILLAGE OF PALMETTO BAY - REFERENCE FORM

Solicitation Information: SW 82nd Bike Lanes Improvements
Invitation to Bid No. 2026-11-002

Name of Company: Headley Construction Group Inc.

To Whom it May Concern,
The above reference vendor is submitting on a proposal solicitation or use of bid that has been issued by the Village of Palmetto Bay. We require that the consultant provide written references with their proposal submission and by providing you with this document the vendor is requesting that you provide the following reference information. We would appreciate you providing the information requested below as well as any other information you feel is pertinent:

Contracted Services Information:

Scope of Work: Concrete Flatwork Concrete Restoration, Concrete Demo & Disposal, Asphalt Restoration, New Asphalt Installation. - Multiple Projects Throughout 2024 & 2025.

Initial Value of Contract: $200,000 +/- Final Value of Contract: $200,000.00

Length of Contract: _____

Would you enter into a contract with the Company in the future? ✓ Yes _____ No

Were the services provided acceptable and of quality standards: ✓ Yes _____ No

Was the Company responsive to your requests and resourceful with the task? ✓ Yes _____ No

Did the Company keep you fully informed of any updates and/or concerns related to the contracted services?

✓ Yes _____ No

If you responded no to any of the above please provide details:

N/A

Comments:

We use Headley Construction Group for 90% of all our concrete work. In 2025 the completed contracts combine over 2 Million Dollars. They are Proffessional, courteous, and do great work.

Name of Public Entity/Company: Gencon Partners, Inc.

Name of Individual completing this form: Jason Barket

Signature: _____ Title: Owner / Vice President

Telephone: 305-878-2499 Email: Jason@Gencon~~Partners~~FL.com.

Thank you for your support in helping us evaluate our solicitation responses.

Sincerely,
Alessia Bencomo, Procurement Specialist

REFERENCES

Each bid must be accompanied by a list of at least ***three (3)*** references from current customers, preferably in the public sector, which shall include all the information requested below. The Village should not be listed as one of the references provided.

VILLAGE OF PALMETTO BAY - REFERENCE FORM

Solicitation Information: SW 82nd Bike Lanes Improvements
Invitation to Bid No. 2026-11-002

Name of Company: Headley Construction Group Inc.

To Whom it May Concern,

The above reference vendor is submitting on a proposal solicitation or use of bid that has been issued by the Village of Palmetto Bay. We require that the consultant provide written references with their proposal submission and by providing you with this document the vendor is requesting that you provide the following reference information. We would appreciate you providing the information requested below as well as any other information you feel is pertinent:

Contracted Services Information:

Scope of Work: Asphalt and concrete installation

Initial Value of Contract: $154,970 Final Value of Contract: $154,970

Length of Contract: 3 months

Would you enter into a contract with the Company in the future? ✓ Yes _____ No

Were the services provided acceptable and of quality standards: ✓ Yes _____ No

Was the Company responsive to your requests and resourceful with the task? ✓ Yes _____ No

Did the Company keep you fully informed of any updates and/or concerns related to the contracted services?

✓ Yes _____ No

If you responded no to any of the above please provide details:

Comments:

Name of Public Entity/Company: Worldwide Distributors Inc, DBA Ebuilt

Name of Individual completing this form: Ariel Rodriguez

Signature: _____ Title: President

Telephone: (305) 709-8754 Email: info@elighting.org

Thank you for your support in helping us evaluate our solicitation responses.

Sincerely,
Alessia Bencomo, Procurement Specialist

ACKNOWLEDGEMENT, WARRANTY AND ACCEPTANCE

A. Company warrants that it is willing and able to comply with all applicable Village laws, rules and regulations.

B. Company warrants that they have read, understand and are willing to comply with all of the requirements of the ITB and the addendum/ addenda nos.

C. Company warrants that it will not delegate or sub-contract its responsibilities under an agreement without the prior written permission of the Council.

D. Company warrants that all information provided by it in connection with this bid is true and accurate.

E. CONTINGENCY FEE AND CODE OF ETHICS WARRANTY:

Company warrants that neither it, nor any principal, employee, agent, representative or family member has promised to pay, and Company has not, and will not, pay a fee for the amount of which is contingent upon the Village awarding this contract. Company warrants that neither it, nor any principal, employee, agent, representative has procured, or attempted to procure, this contract in violation of any of the provisions of the Village conflict of interest and code of ethics ordinances. Further, Company acknowledges that a violation of this warranty will result in the termination of the contract and forfeiture of funds paid, or to be paid, to the Company, if the Company is chosen for performance of the contract.

Signature of Official: Chris Headley

Name (typed): Christopher Headley

Title: VP

Company: Headley Construction Group Inc.

Date: 1/28/26

NON-COLLUSIVE AFFIDAVIT

STATE OF FLORIDA }
} ss.:
COUNTY OF MIAMI-DADE }

Christopher Headley being first duly sworn, deposes and says that:

(1) He/she is the, (Owner, Partner, Officer, Representative or Agent) of: Headley Construction Group, the Company that has submitted the attached Bid;

(2) He/she is fully informed respecting the preparation and contents of the attached Bid and of all pertinent circumstances respecting such Bid;

(3) Such Bid is genuine and is not a collusive or a sham Bid;

(4) Neither the said Company nor any of its officers, partners, owners, agents, representatives, employees or parties in interest, including this affiant, have in any way colluded, conspired, connived or agreed, directly or indirectly, with any other Company or person to submit a collusive or sham response in connection with the work for which the attached bid has been submitted, or to refrain from responding in connection with such work, or have in any manner, directly or indirectly, sought by agreement or collusion, communication, or conference with any Company or person to fix this Bid or to secure through any collusion, conspiracy, connivance, or unlawful agreement, any advantage against the Village of Palmetto Bay, or any person interested in the proposed Work;

Signed, sealed and delivered
In the presence of

Signature of Official: Chris Headley

Name (typed): Christopher Headley

Title: VP

Company: Headley Construction Group Inc.

Date: 1/28/26

Continued Next Page

ACKNOWLEDGMENT

State of Florida)
) ss.:
County of Miami Dade)

The foregoing instrument was acknowledged before me **by means of** X **physical presence or** _ **online notarization**, this 29 day of January, 2026, by Christopher Headley. He/She was X personally known, _____ or produced _____ as a form of identification.

WITNESS my hand and official seal

_____
NOTARY PUBLIC, STATE OF FLORIDA

NOTARY PUBLIC STATE OF FLORIDA
BRIANNA RAMIREZ
MY COMMISSION # HH 727030
EXPIRES: November 18, 2029

SWORN STATEMENT PURSUANT TO SECTION 287.133 (3)(a) FLORIDA STATUES, ON PUBLIC ENTITY CRIMES

THIS FORM MUST BE SIGNED AND SWORN TO IN THE PRESENCE OF A NOTARY PUBLIC OR OTHER OFFICIAL AUTHORIZED TO ADMINISTER OATHS.

1. This sworn statement is submitted to the Village of Palmetto Bay, Florida

By Christopher Headley

For Headley Construction Group Inc.

Whose business address is: 12976 SW 132nd Ave Miami, FL 33186

And (if applicable) its Federal Employer Identification Number (FEIN) is: 86-2156352

2. I understand that a "public entity crime" as defined In Paragraph 287.133(1)(g), Florida Statutes ,and as may be amended means a violation of any state or federal law by a person with respect to and directly related to the transaction of business with any public entity or with any agency or political subdivision of any other State or of the United States, including, but not limited to, any Proposal or contract for goods or services to be provided to any public entity or an agency or any political subdivision of any other state or of the United Sates and involving antitrust fraud, theft, bribery, collusion, racketeering, conspiracy, or material misrepresentation

3. I understand that "convicted" or "conviction"" as defined in Paragraph 287.133(1)(b), Florida Statutes means a finding of guilt or a conviction of a public entity crime, with or without an adjudication of guilt, in any federal or state trial court of record relating to charges brought by indictment or information after July 1, 1989, as a result or a jury verdict, non-jury trial, or entry of a plea or guilty or nab contenders.

4. I understand that an "affiliate" as defined in Paragraph 287.133(1)(a), Florida Statutes, and means:

A. A predecessor or successor of a person convicted of a public entity crime; or
B. An entity under the control of any natural person who is active in the management of the entity and who has been convicted of a public entity crime. The term "affiliate'" includes those officers, directors, executives, partners, shareholders, employees, members, and agents who are active in the management of an affiliate. The ownership by one person of shares constituting a controlling Interest in another person, ore pooling of equipment or income among persons when not for fair market value under an arm's length agreement, shall be a prima facie case that one person controls another person. A person who knowingly enters

into a joint venture with a person who has been convicted of a public entity crime in Florida during the preceding 36 months shall be considered an affiliate.

5. I understand that a "person" as defined in Paragraph 287.133(1)(e), Florida Statutes, means any natural person or entity organized under the laws or any state or of the United States with the legal power to enter into a binding contract and which Bids or applies to Bids on contracts for the provision of goods or services let by a public entity, or which otherwise transacts or applies to transact business with a public entity. The term "person" includes those officers, directors, executives, partners, shareholders, employees, members, and agents who are active in management of any entity.

Signed, sealed and delivered in the presence:

Signature of Official: Chris Headley

Name (typed): Christopher Headley

Title: VP

Company: Headley Construction Group Inc.

Date: 1/28/26

ACKNOWLEDGMENT

State of Florida)
) ss.:
County of Miami Dade)

The foregoing instrument was acknowledged before me **by means of** X **physical presence or** _ **online notarization**, this 28 day of January, 2026, by Christopher Headley. He/She was X personally known, _____ or produced _____ as a form of identification.

WITNESS my hand and official seal

NOTARY PUBLIC, STATE OF FLORIDA

BRIANNA RAMIREZ
MY COMMISSION # HH 727030
EXPIRES: November 18, 2029

AMERICANS WITH DISABILITIES ACT (ADA)
DISABILITY NONDISCRIMINATION STATEMENT

THIS FORM MUST BE SIGNED AND SWORN TO IN THE PRESENCE OF A NOTARY PUBLIC OR OTHER OFFICIAL AUTHORIZED TO ADMINISTER OATHS.

This sworn statement is submitted to the VILLAGE OF PALMETTO BAY, FLORIDA

by: Christopher Headley VP
(print individual's name and title)

for: Headley Construction Group Inc.
(print name of entity submitting sworn statement)

whose business address is: 12976 SW 132nd Ave Miami, FL 33186

and (if applicable) its Federal Employer Identification Number (FEIN) is: 86-2156352

I, being duly first sworn state: That the above named Company, corporation or organization is in compliance with and agreed to continue to comply with, and assure that any sub-contractor, or third party contractor under this project complies with all applicable requirements of the laws listed below including, but not limited to, those provisions pertaining to employment, provision of programs and services, transportation, communications, access to facilities, renovations, and new construction.

The American with Disabilities Act of 1990 (ADA), Pub. L. 101-336, 104 Stat 327, 42 USC 1210112213 and 47 USC Sections 225 and 661 including Title I, Employment; Title II, Public Services; Title III, Public Accommodations and Services Operated by Private entities; Title IV, Telecommunications; and Title V, Miscellaneous Provisions, and as any may be amended.

The Florida Americans with Disabilities Accessibility Implementation Act of 1993, Section 553.501-553.513, Florida Statutes:
The Rehabilitation Act of 1973, 229 USC Section 794;
The Federal Transit Act, as amended 49 USC Section 1612;
The Fair Housing Act as amended 42 USC Section 3601-3631.

Signature of Official: Chris Headley

Name (typed): Christopher Headley

Title: VP

Company: Headley Construction Group Inc.

Date: 1/28/26

Continued Next Page

ACKNOWLEDGMENT

State of Florida)
) ss.:
County of Miami Dade)

The foregoing instrument was acknowledged before me **by means of** X **physical presence or** _ **online notarization**, this 29 day of January, 2026, by Christopher Headley. He/She was X personally known, _____ or produced _____ as a form of identification.

WITNESS my hand and official seal

BRIANNA RAMIREZ
MY COMMISSION # HH 727030
EXPIRES: November 18, 2029

NOTARY PUBLIC, STATE OF FLORIDA

BUSINESS ENTITY AFFIDAVIT

Bidder or Company hereby recognizes and certifies that no elected official, or employee of the Village of Palmetto Bay (the "Village") shall have a financial interest directly or indirectly in this transaction or any compensation to be paid under or through this transaction, and further, that no Village employee, nor any elected or appointed officer (including Village board members) of the Village, nor any spouse, parent or child of such employee or elected or appointed officer of the Village, may be a partner, officer, director or proprietor of Bidder or Company, and further, that no such Village employee or elected or appointed officer, or the spouse, parent or child of any of them, alone or in combination, may have a material interest in the Company or Bidder. Material interest means direct or indirect ownership of more than five percent (5%) of the total assets or capital stock of the Company or Bidder. Any exception to these above-described restrictions must be expressly provided by applicable law or ordinance and be confirmed in writing by Village. Further, Bidder or Company recognizes that with respect to this transaction or bid, if any Bidder or Company violates or is a party to a violation of the ethics ordinances or rules of the Village, the provisions of Miami-Dade County Code Section 2-11.1, as applicable to Village, Village Charter Section 7.6 (Lobbyist), or the provisions of Chapter 112, part III, Fla. Stat., the Code of Ethics for Public Officers and Employees and as may be amended, such Bidder or Company may be disqualified from furnishing the goods or services for which the bid or proposal is submitted and may be further disqualified from submitting any future bids or proposals for goods or services to Village.

Accordingly, Bidder or Company completes and executes the Business Entity Affidavit form below. The terms "Bidder" or "Company," as used herein, include any person or entity making a bid proposal herein to Village or providing goods or services to Village.

I, Christopher Headley being first duly sworn state:

The full legal name and business address of the person(s) or entity contracting or transacting business with the Village of Palmetto Bay ("Village") are (Post Office addresses are not acceptable), as follows:

86-2156352

Federal Employer Identification Number (If none, Social Security Number)

Headley Construction Group Inc.

Name of Entity, Individual, Partners or Corporation

Doing Business As (If same as above, leave blank)

12976 SW 132nd Ave Miami, FL 33186

Street Address Suite Village State Zip Code

Continued Next Page

OWNERSHIP DISCLOSURE AFFIDAVIT

1. If the contact or business transaction is with a corporation, the full legal name and business address shall be provided for each officer and director and each stockholder who holds directly or indirectly five percent (5%) or more of the corporation's stock. If the contract or business transaction is with a trust, the full legal name and address shall be provided for each trustee and each beneficiary. All such names and addresses are (Post Office addresses are not acceptable), as follows:

Full Legal Name	Address	Ownership
Christopher Headley	8240 sw 186 st	51 %
Thomas Headley	20140 cutler Ct	49 %
		%

2. The full legal names and business address of any other individual (other than sub-contractors, material men, suppliers, laborers, or lenders) who have, or will have, any interest (legal, equitable, beneficial or otherwise) in the contract or business transaction with the Village are (Post Office addresses are not acceptable), as follows:
N/A

Signature of Official: Chris Headley

Name (typed): Christopher Headley

Title: VP

Company: Headley Construction Group Inc.

Date: 1/28/26

Continued Next Page

ACKNOWLEDGMENT

State of Florida)
) ss.:
County of Miami Dade)

The foregoing instrument was acknowledged before me **by means of** X **physical presence or** _ **online notarization**, this 29 day of January, 2026, by Christopher Headley. He/She was X personally known, _____ or produced _____ as a form of identification.

WITNESS my hand and official seal

BRIANNA RAMIREZ
MY COMMISSION # HH 727030
EXPIRES: November 18, 2029

NOTARY PUBLIC, STATE OF FLORIDA

ACKNOWLEDGMENT OF CONFORMANCE WITH OSHA STANDARDS

To the Village of Palmetto Bay,

We Headley Construction Group Bidder, Proposer, or Company, hereby acknowledge and agree that we, as the Prime Company for Village of Palmetto Bay, Village of Palmetto Bay SW 82nd Bike Lanes, ITB# 2026-11-002, as specified, have the sole responsibility for compliance with all the requirements of the Federal Occupational Safety and Health Act of 1970 and as may be amended, and all State and local safety and health regulations, and agree to indemnify and hold harmless the Village of Palmetto Bay, against any and all liability, claims, damages losses and expenses they may incur due to the failure of : Dailier Asfalto LLC, C&R Milling & Paving, E & A Express Striping corp (Sub-Contractor's Names) to comply with such act or regulation.

Signature of Official: Chris Headley

Name (typed): Christopher Headley

Title: VP

Company: Headley Construction Group Inc.

Date: 1/28/26

ACKNOWLEDGMENT

State of Florida)
) ss.:
County of Miami Dade)

The foregoing instrument was acknowledged before me **by means of** X **physical presence or** _ **online notarization**, this 29 day of January, 2026, by Christopher Headley. He/She was X personally known, _____ or produced _____ as a form of identification.

WITNESS my hand and official seal

NOTARY PUBLIC, STATE OF FLORIDA

NOTARY PUBLIC STATE OF FLORIDA
BRIANNA RAMIREZ
MY COMMISSION # HH 727030
EXPIRES: November 18, 2029

VILLAGE OF PALMETTO BAY
ANTI-KICKBACK AFFIDAVIT

STATE OF FLORIDA)
) ss.:
COUNTY OF Miami-Dade)

I, the undersigned, hereby duly sworn, depose and say that no portion of the sum herein bid will be paid to any employees of the Village of Palmetto Bay, its elected officials, and Headley Construction Group or its employees, as a commission, kickback, reward or gift, directly or indirectly by me or any member of my Company or by an officer of the corporation.

Signature of Official: Chris Headley

Name (typed): Christopher Headley

Title: VP

Company: Headley Construction Group Inc.

Date: 1/28/26

ACKNOWLEDGMENT

State of Florida)
) ss.:
County of Miami Dade)

The foregoing instrument was acknowledged before me **by means of** X **physical presence or** _ **online notarization**, this 29 day of January, 2026, by Christopher Headley. He/She was X personally known, _____ or produced _____ as a form of identification.

WITNESS my hand and official seal

BRIANNA RAMIREZ
MY COMMISSION # HH 727030
EXPIRES: November 18, 2029

NOTARY PUBLIC, STATE OF FLORIDA

STATEMENT OF PAST CONTRACT DISQUALIFICATIONS

The Bidder, Proposer, or Company shall state whether it or any of its officers or employees who have a proprietary interest in it, has ever been disqualified, removed, or otherwise prevented from bidding on, or completing a federal, state, or local government project because of the violation of law, a safety regulation, or for any other reason, including but not limited to financial difficulties, project delays, or disputes regarding work or product quality, and if so to explain the circumstances.

Do you have any disqualification as described in the above paragraph to declare?

Yes or No, If yes, explain the circumstances.

No

Executed on 1/29/26 at 1:30 PM, 12976 SW 132nd Ave under penalty of perjury of the laws of the State of Florida, that the foregoing is true and correct.

Signature of Official: Chris Headley

Name (typed): Christopher Headley

Title: VP

Company: Headley Construction Group Inc.

Date: 1/29/26

E-VERIFY AFFIDAVIT

STATE OF Florida

COUNTY OF Miami - Dade

I, Christopher Headley (the individual attesting below), being duly authorized byand on behalf of Headley Construction Group (hereinafter "Employer") after firstbeing duly sworn hereby swears or affirms as follows:

1. Employer understands that E-Verify is the federal E-Verify program operated by the United States Department of Homeland Security and other federal agencies, or any successor or equivalent programused to verify the work authorization of newly hired employees pursuant to federal law in accordancewith NCGS §64-25(5), and as the same may be amended.
2. Employer understands that Employers Must Use E-Verify. Each employer, after hiring an employee towork in the United States, shall verify the work authorization of the employee through E-Verify in accordance with NCGS §64-26(a), and as the same may be amended.
3. Employer's subcontractors will comply with E-Verify, and Employer will ensure compliance with E-Verifyby any and all subcontractors subsequently hired by Employer.

This 29 day of January, 2026.

Chris Headley

Signature of Affiant

Print or Type Name: Christopher Headley

State of Florida)
) ss.:
County of Miami-Dade)

The foregoing instrument was acknowledged before me **by means of** X **physical presence or** _ **online notarization**, this 29 day of January, 2026, by Christopher Hadley. He/She was X personally known, _____ or produced _____ as a form of identification.

Signed and sworn to (or affirmed) before me,
this the 29 day of January, 2026.
My Commission Expires: 11/18/29

Notary Public

NHCS – E-Verify 081815

BRIANNA RAMIREZ
MY COMMISSION # HH 727030
EXPIRES: November 18, 2029

Foreign Country of Concern Attestation

Capitalized terms used herein have the definitions ascribed in section 287.138, F.S.

Name of Company is not owned by the government of a Foreign Country of Concern, is not organized under the laws of nor has its principal place of business in a Foreign Country of Concern, and the government of a Foreign Country of Concern does not have a Controlling Interest (twenty five percent (25%) or more) in the Company.

Under penalties of perjury, I declare that I have read the forgoing statement and that the facts stated in it are true.

Printed Name: Christopher Headley

Title: VP

Signature: Chris Headley Date: 1/28/26

Affidavit Attesting to Noncoercive Conduct for Labor or Services

Nongovernment Entity name: Headley Construction Group Inc. ("**Company**")
Vendor FEIN: 86-2156352
Address: 12976 SW 132nd Ave
City: Miami State: FL Zip: 33186
Phone number: 305-613-1490 Email Address: Chris@headleycg.com

As a nongovernmental entity executing, renewing, or extending a contract with a government entity, **Company** is required to provide an affidavit under penalty of perjury attesting that **Company** does not use coercion for labor or services in accordance with Section 787.06, Florida Statutes.

As defined in Section 787.06(2)(a), coercion means:

1. Using or threating to use physical force against any person;
2. Restraining, isolating, or confining or threating to restrain, isolate, or confine any person without lawful authority and against her or his will;
3. Using lending or other credit methods to establish a debt by any person when labor or services are pledged as a security for the debt, if the value of the labor or services as reasonably assessed is not applied toward the liquidation of the debt, the length and nature of the labor or service are not respectively limited and defined;
4. Destroying, concealing, removing, confiscating, withholding, or possessing any actual or purported passport, visa, or other immigration document, or any other actual or purported government identification document, of any person;
5. Causing or threating to cause financial harm to any person;
6. Enticing or luring any person by fraud or deceit; or
7. Providing a controlled substance as outlined in Schedule I or Schedule II of Section 893.03 to any person for the purpose of exploitation of that person.

As a person authorized to sign on behalf of the **Company**, I certify that the **Company** does not use coercion for labor or services in accordance with Section 787.06.

Written Declaration
Under penalties of perjury, I declare that I have read the foregoing Affidavit and that the facts stated in it are true.

Printed Name: Christopher Headley
Title: VP
Signature: Chris Headley
Date: 1/29/26

Form **W-9**
(Rev. August 2013)
Department of the Treasury
Internal Revenue Service

Request for Taxpayer Identification Number and Certification

Give Form to the requester. Do not send to the IRS.

Print or type
See Specific Instructions on page 2.

Name (as shown on your income tax return)
Headley Construction Group Inc.

Business name/disregarded entity name, if different from above

Check appropriate box for federal tax classification:
☐ Individual/sole proprietor ☐ C Corporation ☑ S Corporation ☐ Partnership ☐ Trust/estate

☐ Limited liability company. Enter the tax classification (C=C corporation, S=S corporation, P=partnership) ▶ _____

☐ Other (see instructions) ▶

Exemptions (see instructions):
Exempt payee code (if any) _____
Exemption from FATCA reporting code (if any) _____

Address (number, street, and apt. or suite no.)
12976 SW 132nd Ave

Requester's name and address (optional)

City, state, and ZIP code
Miami, FL 33186

List account number(s) here (optional)

Part I Taxpayer Identification Number (TIN)

Enter your TIN in the appropriate box. The TIN provided must match the name given on the "Name" line to avoid backup withholding. For individuals, this is your social security number (SSN). However, for a resident alien, sole proprietor, or disregarded entity, see the Part I instructions on page 3. For other entities, it is your employer identification number (EIN). If you do not have a number, see *How to get a TIN* on page 3.

Note. If the account is in more than one name, see the chart on page 4 for guidelines on whose number to enter.

Social security number
			-			-				

Employer identification number
8	6	-	2	1	5	6	3	5	2

Part II Certification

Under penalties of perjury, I certify that:

1. The number shown on this form is my correct taxpayer identification number (or I am waiting for a number to be issued to me), and
2. I am not subject to backup withholding because: (a) I am exempt from backup withholding, or (b) I have not been notified by the Internal Revenue Service (IRS) that I am subject to backup withholding as a result of a failure to report all interest or dividends, or (c) the IRS has notified me that I am no longer subject to backup withholding, and
3. I am a U.S. citizen or other U.S. person (defined below), and
4. The FATCA code(s) entered on this form (if any) indicating that I am exempt from FATCA reporting is correct.

Certification instructions. You must cross out item 2 above if you have been notified by the IRS that you are currently subject to backup withholding because you have failed to report all interest and dividends on your tax return. For real estate transactions, item 2 does not apply. For mortgage interest paid, acquisition or abandonment of secured property, cancellation of debt, contributions to an individual retirement arrangement (IRA), and generally, payments other than interest and dividends, you are not required to sign the certification, but you must provide your correct TIN. See the instructions on page 3.

Sign Here Signature of U.S. person ▶ Chris Headley Date ▶ 1/29/26

General Instructions

Section references are to the Internal Revenue Code unless otherwise noted.

Future developments. The IRS has created a page on IRS.gov for information about Form W-9, at *www.irs.gov/w9*. Information about any future developments affecting Form W-9 (such as legislation enacted after we release it) will be posted on that page.

Purpose of Form

A person who is required to file an information return with the IRS must obtain your correct taxpayer identification number (TIN) to report, for example, income paid to you, payments made to you in settlement of payment card and third party network transactions, real estate transactions, mortgage interest you paid, acquisition or abandonment of secured property, cancellation of debt, or contributions you made to an IRA.

Use Form W-9 only if you are a U.S. person (including a resident alien), to provide your correct TIN to the person requesting it (the requester) and, when applicable, to:

1. Certify that the TIN you are giving is correct (or you are waiting for a number to be issued),
2. Certify that you are not subject to backup withholding, or
3. Claim exemption from backup withholding if you are a U.S. exempt payee. If applicable, you are also certifying that as a U.S. person, your allocable share of any partnership income from a U.S. trade or business is not subject to the withholding tax on foreign partners' share of effectively connected income, and
4. Certify that FATCA code(s) entered on this form (if any) indicating that you are exempt from the FATCA reporting, is correct.

Note. If you are a U.S. person and a requester gives you a form other than Form W-9 to request your TIN, you must use the requester's form if it is substantially similar to this Form W-9.

Definition of a U.S. person. For federal tax purposes, you are considered a U.S. person if you are:

- An individual who is a U.S. citizen or U.S. resident alien,
- A partnership, corporation, company, or association created or organized in the United States or under the laws of the United States,
- An estate (other than a foreign estate), or
- A domestic trust (as defined in Regulations section 301.7701-7).

Special rules for partnerships. Partnerships that conduct a trade or business in the United States are generally required to pay a withholding tax under section 1446 on any foreign partners' share of effectively connected taxable income from such business. Further, in certain cases where a Form W-9 has not been received, the rules under section 1446 require a partnership to presume that a partner is a foreign person, and pay the section 1446 withholding tax. Therefore, if you are a U.S. person that is a partner in a partnership conducting a trade or business in the United States, provide Form W-9 to the partnership to establish your U.S. status and avoid section 1446 withholding on your share of partnership income.

SECTION 9.0: Other Forms

VILLAGE OF PALMETTO BAY
NOTICE OF INTENT TO AWARD

TO: _____
Company

_____
Address

ATT: _____
Name and Title

PROJECT DESCRIPTION: **SW 82nd Bike Lanes Improvements**
ITB No. 2026-11-002 in accordance with Contract Documents as prepared by the Village
_____:

This is to advise that the Village of Palmetto Bay intends to award the Contract for the above referenced Project as a result of your Bid of: _____ Dollars ($_____) submitted to the Village of Palmetto Bay (Owner) on _____ (Date).

Two (2) sets of the Contract Documents for this Project are attached. Each set contains an unexecuted Contact. Please execute all copies of the Contract and attach your insurance certificate (COI) as Palmetto Bay being the holder and return to our office within ten (10) consecutive days for final execution by the Owner.

Sincerely yours,

Alessia Bencomo
Procurement Specialist

Cc:

Attachment(s)

VILLAGE OF PALMETTO BAY
NOTICE TO PROCEED

TO: _____
Company

_____
Address

ATT: _____
Name and Title

PROJECT DESCRIPTION: **SW 82nd Bike Lanes Improvements**
ITB No. 2026-11-002 in accordance with Contract Documents
as prepared by the Village

_____:

One executed copy of your Contract for the above Project has been forwarded to you through the Finance Department. The Commencement date is _____, 20___. Completion date shall be _____, 20__.

Your attention is invited to the provision whereby you shall start to perform your obligations under the Contract Documents on the Commencement date. Said date shall begin the Contract Time.

The Village of Palmetto Bay Manager's Office Director and/or his/her designee will be responsible for this project.

Sincerely yours,

Alessia Bencomo
Procurement Specialist

BID BOND

KNOW ALL MEN BY THESE PRESENTS, that we, Headley Construction Group Inc. (hereinafter called the Principal), and The Ohio Casualty Insurance Company (hereinafter called the Surety), a Corporation chartered and existing under the laws of the State of New Hampshire is authorized to do business in the State of Florida, and having an Agent resident therein, such Agent and Company acceptable to the Village of Palmetto Bay, are held and firmly bound unto the Village of Palmetto Bay (hereinafter called Village), in the sum of Five Percent (5%) of Bid Amount Dollars ($ 5% of Bid Amount), good and lawful money of the United States of America, to be paid upon demand of the said Village, to which payment well and truly to be made we bind ourselves, our heirs, executors, administrators, successors and assigns, jointly and severally and firmly by these presents.

WHEREAS; the above bounded Principal contemplates submitting or has submitted a Bid to the Village for furnishing all necessary labor, materials, equipment, machinery, tools, apparatus, services, all insurances and taxes, including but not limited to, state workmen's compensation and unemployment compensation insurance and taxes incurred in the performance of the Contract, and means of transportation for construction of:

VILLAGE OF PALMETTO BAY (the "Village")
SW 82nd Bike Lanes Improvements

for said Village, and;
WHEREAS; the Principal desires to file this Bond in accordance with law, in lieu of a certified Bidder's check otherwise required to accompany this Bid in the amount of five percent (5%) of the Base Bid.

NOW THEREFORE, the conditions of this obligation are such that, if the Bid be accepted, the Principal shall within ten (10) days after receipt of notification of the acceptance thereof, execute the Contract in accordance with the Invitation to Bid and Contact Documents and upon the terms, conditions and price set forth therein, in the form and manner required by the Village and execute sufficient and satisfactory Performance and Payment Bonds payable to the Village of Palmetto Bay, each in an amount of one hundred percent (100%) of the total Contract Price, as indicated in the Bid, in form and with security as set forth in the Invitation to Bid and Contract Documents satisfactory to the Village, then this obligation to be void, otherwise to be and remain in full force and virtue in law; and the Surety shall upon failure of the Principal to comply with any or all of the foregoing requirements within the time specified above immediately pay to the aforesaid Village upon demand the amount hereof in good and lawful money of the United States of America, not as a penalty but as liquidated damages.

IN WITNESS WHEREOF, THE said Headley Construction Group Inc., as "Principal" herein has caused these presents to be signed in its name, by its _____ under its corporation seal, and the said The Ohio Casualty Insurance Company as "Surety" herein, has caused these presents to be signed in its name by its Attorney In fact, under its corporate seal, this 29th day of January, and attested by its Power of Attorney, A.D., 2026.

ATTEST:

_____

_____

Headley Construction Group Inc.

By: Chris Headley VP (Title)
(Principal)

ATTEST: As per attached Power of Attorney

Geri Lynn Mirabal

Lily Rafford

THE OHIO CASUALTY INSURANCE COMPANY INCORPORATED 1919 NEW HAMPSHIRE
Seal No. 8218

The Ohio Casualty Insurance Company

By: _____
Warren M. Alter (Surety) Attorney-in-Fact

(Attorneys-in-Fact who sign this bond must file with it a certified copy of their power-of-Attorney to sign said Bond).

POWER OF ATTORNEY

Liberty Mutual Insurance Company
The Ohio Casualty Insurance Company
West American Insurance Company

Certificate No: 8213376-984816

KNOWN ALL PERSONS BY THESE PRESENTS: That The Ohio Casualty Insurance Company is a corporation duly organized under the laws of the State of New Hampshire, that Liberty Mutual Insurance Company is a corporation duly organized under the laws of the State of Massachusetts, and West American Insurance Company is a corporation duly organized under the laws of the State of Indiana (herein collectively called the "Companies"), pursuant to and by authority herein set forth, does hereby name, constitute and appoint, David T. Satine; Jonathan A. Bursevich; Warren M. Alter

all of the city of Miami Lakes state of FL each individually if there be more than one named, its true and lawful attorney-in-fact to make, execute, seal, acknowledge and deliver, for and on its behalf as surety and as its act and deed, any and all undertakings, bonds, recognizances and other surety obligations, in pursuance of these presents and shall be as binding upon the Companies as if they have been duly signed by the president and attested by the secretary of the Companies in their own proper persons.

IN WITNESS WHEREOF, this Power of Attorney has been subscribed by an authorized officer or official of the Companies and the corporate seals of the Companies have been affixed thereto this 18th day of March, 2025.

Liberty Mutual Insurance Company
The Ohio Casualty Insurance Company
West American Insurance Company

By: _____
Nathan J. Zangerle, Assistant Secretary

State of PENNSYLVANIA
County of MONTGOMERY ss

On this 18th day of March, 2025 before me personally appeared Nathan J. Zangerle, who acknowledged himself to be the Assistant Secretary of Liberty Mutual Insurance Company, The Ohio Casualty Company, and West American Insurance Company, and that he, as such, being authorized so to do, execute the foregoing instrument for the purposes therein contained by signing on behalf of the corporations by himself as a duly authorized officer.

IN WITNESS WHEREOF, I have hereunto subscribed my name and affixed my notarial seal at Plymouth Meeting, Pennsylvania, on the day and year first above written.

Commonwealth of Pennsylvania - Notary Seal
Teresa Pastella, Notary Public
Montgomery County
My commission expires March 28, 2029
Commission number 1126044
Member, Pennsylvania Association of Notaries

By: _____
Teresa Pastella, Notary Public

This Power of Attorney is made and executed pursuant to and by authority of the following By-laws and Authorizations of The Ohio Casualty Insurance Company, Liberty Mutual Insurance Company, and West American Insurance Company which resolutions are now in full force and effect reading as follows:

ARTICLE IV – OFFICERS: Section 12. Power of Attorney.
Any officer or other official of the Corporation authorized for that purpose in writing by the Chairman or the President, and subject to such limitation as the Chairman or the President may prescribe, shall appoint such attorneys-in-fact, as may be necessary to act in behalf of the Corporation to make, execute, seal, acknowledge and deliver as surety any and all undertakings, bonds, recognizances and other surety obligations. Such attorneys-in-fact, subject to the limitations set forth in their respective powers of attorney, shall have full power to bind the Corporation by their signature and execution of any such instruments and to attach thereto the seal of the Corporation. When so executed, such instruments shall be as binding as if signed by the President and attested to by the Secretary. Any power or authority granted to any representative or attorney-in-fact under the provisions of this article may be revoked at any time by the Board, the Chairman, the President or by the officer or officers granting such power or authority.

ARTICLE XIII – Execution of Contracts: Section 5. Surety Bonds and Undertakings.
Any officer of the Company authorized for that purpose in writing by the chairman or the president, and subject to such limitations as the chairman or the president may prescribe, shall appoint such attorneys-in-fact, as may be necessary to act in behalf of the Company to make, execute, seal, acknowledge and deliver as surety any and all undertakings, bonds, recognizances and other surety obligations. Such attorneys-in-fact subject to the limitations set forth in their respective powers of attorney, shall have full power to bind the Company by their signature and execution of any such instruments and to attach thereto the seal of the Company. When so executed such instruments shall be as binding as if signed by the president and attested by the secretary.

Certificate of Designation – The President of the Company, acting pursuant to the Bylaws of the Company, authorizes Nathan J. Zangerle, Assistant Secretary to appoint such attorneys-in-fact as may be necessary to act on behalf of the Company to make, execute, seal, acknowledge and deliver as surety any and all undertakings, bonds, recognizances and other surety obligations.

Authorization – By unanimous consent of the Company's Board of Directors, the Company consents that facsimile or mechanically reproduced signature of any assistant secretary of the Company, wherever appearing upon a certified copy of any power of attorney issued by the Company in connection with surety bonds, shall be valid and binding upon the Company with the same force and effect as though manually affixed.

I, Renee C. Llewellyn, the undersigned, Assistant Secretary, The Ohio Casualty Insurance Company, Liberty Mutual Insurance Company, and West American Insurance Company do hereby certify that the original power of attorney of which the foregoing is a full, true and correct copy of the Power of Attorney executed by said Companies, is in full force and effect and has not been revoked.

IN TESTIMONY WHEREOF, I have hereunto set my hand and affixed the seals of said Companies this 29th day of January, 2026.

By: _____
Renee C. Llewellyn, Assistant Secretary

Not valid for mortgage, note, loan, letter of credit, currency rate, interest rate or residual value guarantees.

For bond and/or Power of Attorney (POA) verification inquiries, please call 610-832-8240 or email HOSUR@libertymutual.com.

ADDENDUM NO. 1

Date: February 2nd, 2026

To: All Interested Parties

From: Alessia Bencomo, Procurement Specialist
Village of Palmetto Bay
9705 E. Hibiscus Street
Palmetto Bay, Florida 33157

Re: Invitation to Bid No. 2026-11-002
SW 82nd Bike Lanes Improvements

This Addendum forms part of the Invitation to Bid (ITB) Package advertised on January 20th, 2026, and with a bid opening date of February 5th, 2026, with any amendments and/or additions noted below.

Question No. 1: When you have a chance can you send me the spec documents for this bid?

Response: *All documents can be found at SW 82nd Bike Lanes - DemandStar.*

Question No. 2: The plans for the bid mentioned above are not legible when I zoom in. Can we get a better copy? Or can I borrow the original set to have it scanned at a print shop?

Response: *Please be advised that I have uploaded another version of the engineering plans to OpenBids-DemandStar.*

Question No. 3: What is the budget or engineers estimate?

Response: *The Engineer's probable cost for this project is Two Hundred Eighty-Five Thousand Four Hundred Fifty Dollars and Zero Cents ($285,450.00) with a ten percent (10%) contingency included.*

Question No. 4: Do you have the bid docs for this opportunity? SW 82nd Bike Lanes.

Response: *Please be advised that I have uploaded another version of the engineering plans to OpenBids-DemandStar.*

Question No. 5: What is the engineer's estimate for the above-referenced project?

Response: *The Engineer's probable cost for this project is Two Hundred Eighty-Five Thousand Four Hundred Fifty Dollars and Zero Cents ($285,450.00) with a ten percent (10%) contingency included.*

Question No. 6: I would like to inquire about the licensing requirements for bidding on this project. Will an Underground Utilities & Excavation License from the state of Florida & Miami Dade County Paving Engineering Certificate of Competency meet the required qualifications?

Response: *Yes, this license would qualify for the scope of work on this project.*

Question No. 7: What is the size of the ADA Accessible Catch Basin Grate?

Response: *Please be advised that the bidder is recommended/suggested to evaluate the size as part of the bidder's due diligence/field assessment.*

Question No. 8: What is the estimated contract duration (number of calendar days) for the above-referenced project?

Response: *Six (6) months from Notice to Proceed (NTP).*

Question No. 9: Is there a possibility to close SW 82nd?

Response: *Daily closures in one direction will be allowed outside of peak times. MOT needs to be submitted for review.*

Question No. 10: Should the bike lanes be preformed or painted?

Response: *The bike lane markings need to follow FDOT Index 771-002, which specifies preformed thermoplastic.*

Question No. 11: In regards to the green bike lane, can FDOT approved green paint be used or do you require the installation of preform? If preform is required are there any specifications? (e.i Glass bead reflection)

Response: *The bike lane markings need to follow FDOT Index 771-002, which specifies preformed thermoplastic.*

Question No. 12: Do paver driveways need to be completely restored with new pavers or can we preserve existing pavers and reset?

Response: *Preserving existing pavers is allowed.*

Question No. 13: Do you have a designated staging area?

Response: *Proposed staging area should be provided with MOT submittal for our review.*

Question No. 14: Do we have to pay for permit fees?

Response: *Any permit fees paid will be reimbursed by the Village.*

Question No. 15: Will a certified arborist be needed to specify root pruning as roots encroach in the work limit area?

Response: *The Village has a certified arborist that will assist.*

Thank you,

A Bencomo

Alessia Bencomo
Procurement Specialist

9705 East Hibiscus Street, Palmetto Bay, Florida 33157
Tel: 305.259.1234 • Fax: 305.259.1290

ACKNOWLEDGEMENT OF ADDENDUM SOLICITATION

Amendment/Modification No: 1

Amendment of ITB No: 2026-11-002

Title: SW 82nd Bike Lanes Improvements

Name of Contractor Headley Construction Group Inc

Date Addendum Received 2/2/26

Total Pages of Addendum including Acknowledgement 3

Print Name Christopher Headley

Signature Chris Headley

All other terms and conditions stipulated in the original Village of Palmetto Bay Invitation to Bid shall remain in force. All addenda created will be incorporated into the final contract and must be acknowledged in all bids. This acknowledgement form must be included in the response and failure to sign and submit this form may result in rejection of your bid.

PERFORMANCE BOND

PROJECT TITLE: **SW 82nd Bike Lanes Improvements (the "Project")**
CONTRACTOR:
CONTRACT NO: **2026-11-002**
CONTRACT DATED:

STATE OF §_____
§_____
COUNTY OF §_____

KNOW ALL MEN BY THESE PRESENTS: That by this Bond, we, _____ of the City of _____, County of _____, and State of _____, as Principal, and _____, authorized, licensed and admitted to do business under the laws of the State of Florida to act as Surety on bonds, as Surety, are held and firmly bound unto The Village of Palmetto Bay, as Obligee, in the penal sum of _____ Dollars ($_____) for the payment whereof, the said Principal and Surety bind themselves, and their heirs, administrators, executors, successors and assigns, jointly and severally, by these presents:

WHEREAS, the Principal has entered into a certain written Contract with _____ (Company), dated the _____ day of _____, 20___, for the construction of the **SW 82nd Bike Lanes Improvements** (the "Project"), which Contract is by reference made a part of this Bond.

NOW, THEREFORE, THE CONDITION OF THIS OBLIGATION, IS SUCH THAT, if the said Principal shall faithfully perform said Contract and shall in all respects fully and faithfully observe and perform all and singular the covenants, conditions, warranties and agreements in and by said Contract agreed and covenanted by the Principal to be observed and performed, and according to the true intent and meaning of said Contract, then this obligation shall be void; otherwise it shall remain in full force and effect.

Whenever Principal shall be declared by Obligee to be in default under the Contract, Obligee having performed Obligee's obligations thereunder, the Surety shall promptly remedy the default, or shall promptly:

(1) Complete the Contract in accordance with its terms and conditions; or

(2) Obtain a bid or bids for completion of the Contract in accordance with its terms and conditions and upon determination by Surety of the lowest responsive, responsible bidder, or, if Obligee elects, upon determination by Obligee and the Surety jointly of the lowest responsive, responsible bidder, arrange for a contract between such bidder and Surety for completion of the Contract in accordance with its terms and conditions, and make available as work progresses (even

though there should be a default or a succession of defaults under the contract or contracts of completion arranged under this paragraph) sufficient funds to pay the cost of completion less the balance of the Contract price; but not exceeding the amounts set forth in the first paragraph hereof.

The term "balance of the Contract price" as used in this Bond, shall mean the total amount payable by Obligee to Principal under the Contract and amendments thereto, less the amount paid by Obligee to Principal and less amounts withheld by Obligee pursuant to its rights under the Contract.

Surety, for value received, stipulates and agrees that no change, extension of time, alteration or addition to the terms of the Contract, or to the work performed thereunder, or the plans, specifications, or drawings accompanying the same, shall in any way affect its obligation on this Bond, and it does hereby waive notice of any such change, extension of time, alteration or addition to the terms of the Contract, or to the work to be performed thereunder and further agrees to all of the terms contained in the Contract.

No right of action shall accrue on this Bond to or for the use of any person or corporation other than the Obligee named herein or the heirs, successors, executors or administrators of the Obligee.

IN WITNESS WHEREOF, the said Principal and Surety have signed and sealed this instrument this _____ day of _____, 20___.

Witness:_____	Witness:_____
Principal	Surety
By:_____	By:_____
Name:_____ (Print)	Name:_____ (Print)
Title:_____	Title:_____
Address:_____	Address:_____
_____	_____

The name and address of the Resident Agent for service of process on Surety is:

Name:_____

Address:_____

Phone:_____

LABOR AND MATERIAL PAYMENT BOND

PROJECT TITLE: **SW 82nd Bike Lanes Improvements**
CONTRACTOR:
CONTRACT NO: **2026-11-002**
CONTRACT DATED:

STATE OF §_____
§_____
COUNTY OF §_____

KNOW ALL MEN BY THESE PRESENTS: That, by this Bond, we _____, of the City of _____, County of _____, State of _____, as Principal, and _____, a Company, authorized, licensed and admitted to do business under the laws of the State of Florida, as Surety, are held and firmly bound to the Village of Palmetto Bay, as Obligee, in the sum of $_____ for the payment of which Principal and Surety bind ourselves our heirs, personal representatives, successors, and assigns, jointly and severally.

THE CONDITION OF THE BOND is that if Principal:

1. Promptly makes payments to all lienors or other claimants supplying labor, material, or supplies used directly or indirectly by Principal in the prosecution of the work provided in the Contract between Principal and Obligee (the "Contract") for construction of the **SW 82nd Bike Lanes Improvements** the Contract being made a part of this Bond by reference; and

2. Pays Obligee all loss, damage, expenses, costs, and attorneys' fees, including appellate proceedings that Obligee sustains because of default by Principal under this Bond; then this Bond is void; otherwise, it remains in full force.

Any changes, extensions of time, alterations or additions in or under the Contract, Contract Documents, plans, specifications and/or drawings, or the work to be performed thereunder, and compliance or noncompliance with formalities connected with the Contract or with the changes do not affect Surety's obligations under this Bond, and Surety does hereby waive notice of any such changes, extensions of time, alterations or additions in or under the Contract, Contract Documents, plans, specifications and/or drawings, or the work to be performed thereunder.

This Bond is filed in accordance with Section 713.23, Florida Statutes, and/or Section 255.05, Florida Statutes, whichever or both as may be applicable.

DATED on _____, 20___.

IN WITNESS WHEREOF, the said Principal and Surety have signed and sealed this instrument this _____ day of _____, 20___.

Witness:_____

Principal

By:_____

Name:_____
(Print)

Title:_____

Date:_____

Address:_____

Witness:_____

Surety

By:_____

Name:_____
(Print)

Title:_____

Date:_____

Address:_____

The name and address of the Resident Agent for service of process Surety is:

Name:_____

Address:_____

Phone:_____

CONTRACTOR'S Affidavit and Partial Release

Owner: Village of Palmetto Bay
Project: **SW 82nd Bike Lanes Improvements**

Invitation to Bid#: 2026-11-002

Date: _____

STATE OF FLORIDA,
COUNTY OF DADE:

On this _____ day of _____, 20___, the undersigned affiant personally appeared before me and, after first being duly sworn, deposes and says:

1. The undersigned is the duly authorized representative of _____ doing business in the Village of Palmetto Bay, hereafter called Contractor.

2. The Contractor for and in consideration of payment to the Contractor in the amount of $ _____, and all other previous payments paid by Owner to Contractor, does hereby for and on behalf of _____ Contractor, waive, release, remise and relinquish the Contractor's right to claim, demand or impose a lien or liens for work done or materials and/or services furnished or any other class of lien whatsoever, on any of the premises or property owned by Owner through the above date.

3. The Contractor, by authorization and for the Contractor, further releases and forever discharges Owner, Engineer and the Project from any and all obligations arising out of the Contractor's Contract with the Owner, including all change orders thereto, either oral or written and any and all claims demands, and liens of any kind, nature and character whatsoever.

4. All persons, entities, Potential Lienors (subcontractor, sub-subcontractors suppliers, laborers and materialmen) and claimants who furnished material, labor and/or services for the Project have been paid for work completed through the above date.

5. This Affidavit and Partial Release is made by the Contractor with full knowledge of the applicable laws of the State of Florida. In addition to such rights as may be afforded to Owner under said applicable laws, the undersigned expressly agrees to indemnify and save Owner, Engineer, and the Project harmless from any and all actual costs and expenses, including reasonable attorney's fees, arising out of any claim by laborers, subcontractors, sub-subcontractors, materialmen, Potential Lienors or other claimants who might claim that they have not been paid for services or material furnished by or through the Contractor in connection with the Work performed under the Contract through the above date.

6. The Contractor further warrants that waivers of lien have been obtained from all Contractors, subcontractors, sub-subcontractors, suppliers, laborers and materialmen with respect to all work performed on the Project through the above date in such form as to constitute an effective waiver of lien under the applicable laws of the State of Florida.

_____(Seal)
Contractor

_____
Print Name

By:_____

_____
Print Name

State of Florida)
) ss.:
County of _____)

The foregoing instrument was acknowledged before me **by means of _____ physical presence or _ online notarization**, this __ day of _____, 202_, by _____. He/She was _____ personally known, _____ or produced _____ as a form of identification.

_____
Notary Public, State of Florida

My Commission Expires:

_____
Print Name of Notary Public

CONTRACTOR'S Affidavit and Final Release

Owner: Village of Palmetto Bay
Project: **SW 82nd Bike Lanes Improvements**

Invitation to Bid#: 2026-11-002

Date: _____

STATE OF FLORIDA,
COUNTY OF DADE:

On this _____ day of _____, 20___, the undersigned affiant personally appeared before me and, after first being duly sworn, deposes and says:

1. The undersigned is the duly authorized representative of _____ doing business in the Village of Palmetto Bay, hereafter called Contractor.

2. The Contractor for and in consideration of final payment to the Contractor in the amount of $_____, and all other previous payments paid by Owner to Contractor, does hereby for and on behalf of _____ Contractor, waive, release, remise and relinquish the Contractor's right to claim, demand or impose a lien or liens for Work done or materials and/or services furnished or any other class of lien whatsoever, on any of the premises or property owned by Owner.

3. The Contractor, by authorization and for the Contractor, further releases and forever discharges Owner, Engineer and the Project from any and all obligations arising out of the Contractor's Contract with the Owner for Work at the Project, including all change orders thereto, either oral or written, and any and all claims, demands, and liens of any kind, nature and character whatsoever.

4. All work performed under the Contract with Owner on the Project has been fully completed and that all persons, entities, Potential Lienors (subcontractors, sub-subcontractors, suppliers, laborers and materialmen) and other claimants who furnished material, labor and/or services for the Project have been paid in full.

5. This Affidavit and Final Release is made by the Contractor with full knowledge of the applicable laws of the State of Florida. In addition to such rights as may be afforded to Owner under said applicable laws, the Contractor expressly agrees to indemnify and save Owner, Engineer, and the Project harmless from any and all actual costs and expenses, including reasonable attorney's fees, arising out of any claim by laborers, subcontractors, sub-subcontractors, materialmen, Potential Lienors or other claimants who might claim that they have not been paid for services or material furnished by or through the Contractor in connection with the Work performed under the Contract at the Project.

6. The Contractor warrants that in connection with the Work performed on the Project, there are no outstanding contractors' liens affecting the Project, that all amounts due and payable with respect to the Work performed by the Contractor (including Social Security, Unemployment, Insurance, Sales, Use and any other taxes), Union dues, and fringe benefits to employees, if any, have been duly paid to date and/or are included in the application for final payment. The Contractor further warrants that waivers of lien have been obtained from all Contractors, subcontractors, sub-subcontractors, suppliers, laborers and materialmen with respect to all Work performed on the Project in such form as to constitute an effective waiver of lien under the applicable laws of the State of Florida.

_____(Seal)
Contractor

_____
Print Name

By:_____

_____
Print Name

State of Florida)
) ss.:
County of _____)

The foregoing instrument was acknowledged before me **by means of** _____ **physical presence or** _ **online notarization**, this __ day of _____, 202_, by _____. He/She was _____ personally known, _____ or produced _____ as a form of identification.

_____
Notary Public, State of Florida

My Commission Expires:

_____
Print Name of Notary Public

WAIVER AND RELEASE OF LIEN UPON PROGRESS PAYMENT

Owner: Village of Palmetto Bay
Project: **SW 82nd Bike Lanes Improvements**

Invitation to Bid#: 2026-11-002

Date: _____

WHEREAS, the Undersigned _____ in consideration of payment in the amount of $_____ which is hereby acknowledged, does waive, release and relinquish its right to claim a lien or liens for work performed and/or materials furnished to the Owner on the Project through the above date. In addition, Undersigned does waive, release and relinquish its right to claim against the Payment Bond of Contractor. This Waiver and Release of Lien Upon Progress Payment is given pursuant to Section 713.20(3) of the Construction Lien law.

The Undersigned expressly agrees to indemnify and save Owner and the Project harmless from any and all costs and expenses, including reasonable attorney's fees, arising out of any claims by any claimant who might claim that they have not been paid for services or material furnished by or through the Undersigned for the Project through the above date.

_____ (Seal)
Contractor

_____
Print Name

By:_____

_____
Print Name

State of Florida)
) ss.:
County of _____)

The foregoing instrument was acknowledged before me **by means of** _____ **physical presence or** _ **online notarization**, this __ day of _____, 202_, by _____. He/She was _____ personally known, _____ or produced _____ as a form of identification.

_____
Notary Public, State of Florida

My Commission Expires:

_____
Print Name of Notary Public

WAIVER AND FINAL RELEASE OF LIEN

Owner: Village of Palmetto Bay
Project: **SW 82nd Bike Lanes Improvements**

Invitation to Bid#: 2026-11-002

Date: _____

The Undersigned _____, for and in consideration of the final payment in the sum of $_____, hereby acknowledges receipt of final payment and all previous payments paid to Undersigned. In consideration of the payments received as set forth above, the undersigned hereby:

1. Represents that all work to be performed by Undersigned for the Project has been fully completed and that all persons, entities, lienors and claimants who furnished material, labor and/or services incident to the completion of said work and through the Undersigned have been paid in full.

2. Does waive, release, remise and relinquish its right to claim, demand, or impose a lien or liens or make any claim against the Payment Bond of the Contractor, for work done or materials and/or services furnished on any of the premises or property owned by the Owner.

3. Warrants that the work performed by the Undersigned on the Project (including the work performed by any person or company working through the Undersigned) is and shall be lien free, and that any person or company hired by the Undersigned does not have, nor shall have, any right to place any contractors' lien or other lien, bond, claim or other encumbrance on the Project or the property of the Owner.

4. States that this Final Release of Lien is made by the Undersigned with full knowledge of the applicable laws of the State of Florida. In addition to such rights as may be afforded to Owner under said applicable laws, the Undersigned expressly agrees to indemnify and hold the Owner harmless from any and all costs and expenses, including reasonable attorney's fees, arising out of claims by any laborers, subcontractors, sub-subcontractors, materialmen, lienors or other claimants who might claim that they have not been paid for services or material furnished by or through Undersigned in connection with the work performed on the Project.

_____(Seal)
Contractor

_____
Print Name

By:_____

_____
Print Name

State of Florida)
) ss.:
County of _____)

The foregoing instrument was acknowledged before me **by means of** _____ **physical presence or** _ **online notarization**, this __ day of _____, 202__, by _____. He/She was _____ personally known, _____ or produced _____ as a form of identification.

_____
Notary Public, State of Florida

My Commission Expires:

_____
Print Name of Notary Public

SECTION 10.0: Exhibits

Draft Contract for: SW 82nd Bike Lanes Improvements

MASTER AGREEMENT FOR THE _____

THIS AGREEMENT (the "Agreement") is entered into as of the Effective Date (defined in Section 1, below) by and between the Village of Palmetto Bay (the "Village"), a Florida Municipal Corporation, located at 9705 East Hibiscus Street, Florida, 33157, and _____ (the "Company" and, together with the Village, the "Parties"), a Florida corporation, located at _____ and whose Federal Employer Identification Number is _____.

WHEREAS, the Village desires to employ the Company to provide the _____, as more particularly set forth in Exhibit "___" hereto (the "Work"); and

WHEREAS, the Village has solicited for these services via an advertised invitation to bid ("ITB# _____") from the Company; and

WHEREAS, the Company and the Village have agreed to enter into an agreement and represents that it is competent, qualified, capable, and prepared to do so according to the terms and conditions stated herein.

NOW, THEREFORE, in consideration of the mutual understanding and covenants, the Village and the Company hereby agree, as follows:

1.0 Effective Date; Term

1.1 This Agreement shall take effect on the date (the "Effective Date") of its execution by the Village.

1.2 The term of this Agreement shall commence upon the issuance by the Village of a "Notice to Proceed" ("NTP"), shall remain in effect until the Work has been completed and the Village has satisfactorily accepted the Work performed.

After issuance of the NTP from the Village, the Company shall perform their Work and be finished no later than _____. The Village Manager reserves the right to extend the completion deadline given time factors such as a delay in receipt of materials by the Company, etc. at his sole discretion, with no assessing of damages for failure to meet deadline as described in the signed Agreement.

DRAFT

2.0 Services to Be Performed by Company

2.1 The Village retains the Company to furnish those services and to perform those tasks (collectively, the "Services") further described in the Village's ITB, to include all attachments and addenda, which are incorporated into this Agreement by this reference, attached as composites Exhibit "___", Exhibit "___", Exhibit "___", Exhibit "___" and Exhibit "___" and made a part of this Agreement. In the event there is a conflict between the terms of Exhibit ___, or ___, and this Agreement, the terms of this Agreement, including Exhibits ___, ___ and ___ shall prevail and then the following priority is established thereafter:

Exhibit "A": ITB# 2026-11-002

Exhibit "B": Bid Sheet submitted by _____

Exhibit "C": Resolution No. 2026-___

Exhibit "D": Work Authorization

2.2 When the Village requires the Company to perform Services, the Village, by the Division Director, _____, will issue a Work Authorization to the Company stating the specific scope of services and all provisions of this Agreement shall apply to the Work Authorization with full force and effect as if appearing in full within each Work Authorization. Each Work Authorization will also state the following information: (1) specific scope of services, (2) work schedule, and (3) anticipated start and completion dates. Each Work Authorization shall become effective upon due execution and issuance of a purchase order.

2.3 The Company is not authorized to undertake any work without a duly executed Work Authorization and corresponding purchase order, which shall specify the services to be performed and the time to be completed.

2.4 Exclusive Provider. The Company recognizes and acknowledges that the Village may not utilize several different companies to perform the same or similar Services for the Village and that the Company will be sole company to perform any such Services.

2.5 Work Authorizations Valid After Agreement Expiration. When the Company and the Village enter into a Work Authorization where the term of the Work Authorization expires on a date that is later than the date that the Agreement expires, the Company and the Village agree that the terms of this Agreement and any amendments, attachments or provisions thereof shall automatically extend through and until the expiration (including any extension or amendment

DRAFT

thereto) so the full completion of the requirements of the Work Authorization have been performed. Cancellation by the Village of any remaining services prior to the Company's full completion of the requirements of the Work Authorization shall cause the terms of this Agreement to terminate at the same time as the Work Authorization. This Section 2.5 applies only when the expiration of the Work Authorization extends beyond the expiration of this Agreement. This section does not apply when a Work Authorization expires or is cancelled prior to the expiration of this Agreement.

3.0 Compensation

3.1 General

3.1.1 In consideration for its providing the Services, the Village shall pay the Company in accordance with the Bid Sheet set forth in Exhibit "C" which is attached and made a part of this Agreement.

3.1.2 The Company shall attach all appropriate cost substantiations to the invoice and shall deliver the invoices monthly to:

Village of Palmetto Bay

_____ Department

9705 E. Hibiscus Street

Palmetto Bay, FL 33157

3.1.3 The Company will clearly state "Final Invoice" on the Company's final/last billing for the Services rendered to the Village. The Company's submission of a Final Invoice is its certification that all Services have been properly performed and all charges and costs have been invoiced to the Village. This account will be closed upon the Village's receipt of a Final Invoice. The Company waives any charges not properly included on its Final Invoice.

3.1.4 The Village's payment of the Final Invoice shall not constitute evidence of the Village's acceptance of the Company's performance of the Service or the Village's acceptance of any Work.

3.1.5 By submitting an invoice, the Company's project manager or designated payroll officer is attesting to the correctness and accuracy of all charges.

3.2 Disputed Invoices

3.2.1 In the event that all or a portion of an invoice submitted to the Village for payment to the Company is disputed, the Village shall notify the Company within fifteen (15)

DRAFT

working days of receipt of the invoice of the objection, modification or additional documentation request. The Company shall provide the Village with additional backup documentation within five working days of the date of the Village's notice. The Village may request additional information, including but not limited to, all invoices, time records, expense records, accounting records, and payment records of the Company. The Village, at its sole discretion, may pay to the Company the undisputed portion of the invoice. The Parties shall endeavor to resolve the dispute in a mutually agreeable fashion.

3.3 Agreement Price. The guaranteed maximum price ("GMP") shall include all Work necessary for the proper execution and completion of the Project. Based on the Company's bid the total amount is Eighty-Three Thousand Seven Hundred Fifty-Four Dollars and Zero Cents ($83,754.00). The Company shall give a detailed description of any Work that requires additional compensation if the Services exceeds the GMP. Any additional compensation must be approved by the Village and which can be denied in its sole discretion. The Company shall fund any additional costs that exceed the GMP if the Company either failed to provide a detailed description and justification for the need for the additional amount or if the Village denies additional compensation.

The payment shall be as follows: Company shall submit invoices to: Village of Palmetto Bay, _____ Department, _____, Palmetto Bay, Florida 33157. Only Work that has been signed off as satisfactorily completed can be subject to payment.

4.0 Company's Responsibilities

4.1 The Company shall be responsible for the professional quality, accuracy, competence, methodology, and the coordination of all Services performed pursuant to this Agreement.

4.2 The Village's review, approval, acceptance, or payment for any of the Company's Services shall not be construed to: (i) operate as a waiver of any rights the Village possesses under this Agreement; or (ii) waive or release any claim or cause of action arising out of the Company's performance or nonperformance of this Agreement. The Company shall be and will always remain liable to the Village in accordance with applicable law for any and all damages to the Village caused by the Company's negligent or wrongful performance or nonperformance of any of the Services to be furnished under this Agreement.

DRAFT

5.0 Ownership of Documents

All analyses, reference data, bills, completed reports, or any other form of written instrument or document created or resulting from the Company's performance of the Services pursuant to this Agreement shall become the property of the Village after payment is made to the Company for such instruments or documents.

6.0 Termination

6.1 **Termination without Cause.** The Village may terminate this Agreement, in whole or in part, at any time, either for the Village's convenience or because of the failure of the Company to fulfill its obligations under this Agreement, subject to the cure period provided in Section 27.0, by delivering written notice to the Company. Upon receipt of such notice, the Company shall:

6.1.1 Immediately discontinue all Work and affected Services unless the notice directs otherwise, and

6.1.2 Deliver to the Village all data, reports, summaries, and any and all such other information and materials of whatever type or nature as may have been accumulated by the Company in performing this Agreement, whether completed or in process.

6.2 **Termination with Cause.** Without waiving the right to terminate without cause, the Village may issue a written notice claiming breach of Contract and giving the Company ten (10) calendar days to cure the default. If the alleged breach of Contract is not cured, then the Village may terminate the Contract and be excused from further performance following termination. However, termination of the Contract will not relieve the Company of any deliverables and Work product due prior to the termination of the Contract, including but not be limited to reports, statements of accounts, payments due the Village and any other records requested by the Village prior to the termination of the Contract. The Village shall not be liable for any damages for lost profits, special damages, consequential damages, or business interruption on account of the Village's decision to terminate this Contract. Additionally, the Company agrees that in the event this Contract is terminated for the Village's breach, the damages that the Company may have against the Village shall be limited to actual compensatory damage, and in no event more than the amount in paragraph 27, below.

DRAFT

6.3 Unless in dispute or subject to the Village's right of set-off or other remedy, the Company shall be paid for Work and Services actually rendered to the date of termination.

6.4 The rights and remedies of the Village provided for in this Section 6 are in addition and supplemental to any and all other rights and remedies provided by law or under this Agreement.

6.5 Liquidated Damages. The Parties recognize that time is of the essence of this Agreement and that the Village will suffer financial loss and other damages if the Work is not substantially or finally complete within the time specified herein. They also recognize the expense and difficulties involved in a legal or arbitration proceeding. The Company acknowledges and agrees that the actual damages which the Village will suffer in the event of delay in achieving Substantial Completion or Final Completion of the Work are difficult, if not impossible, to determine and that the liquidated damages described are a fair and reasonable estimate of the delay damages which the Village is expected to suffer in the event of such delay. Accordingly, as actual damages cannot be ascertained, the Parties agree that as liquidated damages for delay, but not as a penalty, the Company shall pay the Village the amount of One Thousand and 00/100 Dollars ($1,000.00) for each day after the time specified in this Agreement for Substantial Completion until the Work is substantially complete.

Liquidated damages shall be deducted from the Company's applications for payment. However, if at the time of the Company's final application for payment, the Company is owed insufficient amounts to fully cover the deduction for liquidated damages, the Company shall pay the amount due within ten (10) days of written demand by the Village.

7.0 No Contingent Fees

The Company warrants that it has not employed or retained any company or person, other than a bona fide employee working solely for the Company to solicit or secure this Agreement and that it has not paid or agreed to pay any person, company, corporation, individual or firm, other than a bona fide employee working solely for the Company, any fee, commission, percentage, gift, or other consideration contingent upon or resulting from award of or making of the Agreement. For the breach or violation of this provision, the Village shall have the right to terminate the Agreement at its sole discretion, without liability and to deduct from the Agreement price, or otherwise recover, the full amount of such fee, commission, percentage, gift, or consideration.

DRAFT

8.0 Assignment

The Company shall not assign, transfer, or encumber this Agreement, or any interest herein, under any circumstances, without the express written consent of the Village.

9.0 Professional Associates and Subcontractors

If the Company requires the assistance of any professional associates or subcontractors in connection with it providing the Services the Company must obtain the prior express written approval of the Village, which the Village may withhold in its discretion, before any such professional associate or subcontractor may perform any Work for the Village. If after obtaining the Village's approval the Company utilizes any professional associates or subcontractors in the delivery of the Services then the Company shall remain solely and fully liable to the Village for the performance or nonperformance of all such professional associates and subconsultants. The failure of a professional associate or subcontractors to timely or properly perform any of its obligations to the Company shall not relieve the Company of its obligations to the Village under this Agreement.

10.0 Indemnification of Village

The Company shall indemnify, defend and hold harmless the Village and its officers, employees, agents and instrumentalities from any and all liability, losses or damages, including attorneys' fees and costs of defense at both trial and appellate levels, in which the Village or its officers, employees, agents or instrumentalities may incur as a result of claims, demands, suits, causes of actions or proceedings of any kind or nature arising out of, relating to or resulting from the performance of this Agreement by the Company or its employees, agents, servants, partners, principals or subcontractors. The Company shall pay all claims and losses in connection therewith and shall investigate and defend all claims, suits or actions of any kind or nature in the name of the Village, and shall pay all costs, judgments, and attorney's fees which may issue as a result of the Company's negligence, at both trial and appellate levels. The Company expressly understands and agrees that any insurance required by this Agreement or otherwise provided by the Company shall in no way limit the responsibility to indemnify, hold harmless and defend the Village or its officers, employees, agents, and instrumentalities. One Percent (1%) of the Agreement amount shall represent the consideration to be provided for this Indemnification. Nothing contained herein shall be deemed a waiver of Sovereign Immunity provided to the Village under Section 768.28, Florida Statutes.

DRAFT

11.0 Insurance/Bond Requirements

The Company shall maintain at all times the following minimum levels of insurance and shall, without in any way altering its liability, obtain, pay for and maintain insurance for the coverage and amounts of coverage not less than those set forth below. The Company shall provide the Village original Certificates of Insurance satisfactory to the Village to evidence such coverage before any Work commences. The Village shall be named as an additional insured on General Liability policies. General Liability and Workers' Compensation policies shall contain a waiver of subrogation in favor of Village. The commercial General Liability Policy shall provide (by endorsement if necessary) contractual liability coverage for the contractual indemnity stated in Section 10, above. All insurance coverage shall be written with a company having an A.M. Best rating of at least the "A" category and size category of VIII. The Company's self-insured retention or deductible per line of coverage shall not exceed $25,000 without the permission of the Village. In the event of any failure by the Company to comply with the provisions of this Section 11.0, the Village may, at its option, upon notice to the Company suspend Company's performance of the Services for cause until there is full compliance. Alternatively, the Village may purchase such insurance at the Company's expense, provided that the Village shall have no obligation to do so and if the Village shall do so, the Company shall not be relieved of or excused from the obligation to obtain and maintain such insurance amounts and coverage.

Commercial General Liability. $1,000,000.00 combined single limit of liability for bodily injuries, death and property damage, and personal injury resulting from any one occurrence, including the following coverages:

Premises and Operations:

Broad Form Commercial General Liability Endorsement to include Blanket Contractual liability (specifically covering, but not limited to, the contractual obligations assumed by the Company); Personal Injury (with employment and contractual exclusions deleted); and Broad Form Property Damage coverage.

DRAFT

Independent Contractors:

Delete Exclusion relative to collapse, explosion and underground; Property Damage Hazards; Cross Liability Endorsement; and Contractual liability (specifically covering, but not limited to, the contractual obligations assumed)

Comprehensive Automobile Liability Insurance. $1,000,000.00 combined single limit of liability for bodily injuries, death and property damage resulting from any one occurrence, including all owned, hired, and non-owned vehicles.

Workers Compensation. The Company shall provide, pay for, and maintain workers compensation insurance on all employees, its agents or subcontractors as required by Florida Statutes.

Bond. If required, Performance and Payment Bonds must be received before Notice to Proceed is issued. Each Bond shall guarantee One Hundred Percent (100%) of the project, and subject to Village approval.

12.0 Public Entity Crimes

The Company declares and warrants that neither the Company nor any of the Company's affiliates, as that term is defined in Section 287.133, Florida Statutes, are subject to the restrictions in Section 287.133, Florida Statutes, regarding the commission of a public entity crime. If during the term of this Agreement, the Company or any affiliate is convicted of a public entity crime or is otherwise prohibited from performing work for or transacting business with the Village pursuant to Section 287.133, Florida Statutes, then the Company shall be in material default of this Agreement, and in such case, the Village shall have the rights and remedies as provided herein.

13.0 Non-Discrimination; Discriminatory Vendor List

The Company warrants and represents that all of its employees are treated equally during employment without regard to race, color, religion, gender, age or national origin.

Pursuant to Section 287.134, Florida Statutes, an entity or affiliate who has been placed on the discriminatory vendor list may not submit a bid, proposal, or reply on a contract to provide any goods or services to a public entity; may not submit a bid, proposal, or reply on a contract with a public entity for the construction or repair of a public building or public work; may not submit bids, proposals, or replies on leases of real property to a public entity; may not be awarded or perform

DRAFT

work as a contractor, supplier, subcontractor, or consultant under a contract with any public entity; and may not transact business with any public entity. By execution of this Agreement, the Company represents that it has not been placed on the discriminatory vendor list as provided in Section 287.134, Florida Statutes.

14.0 Designation of Party Representatives

14.1 Upon receipt of a request from the Company, the Village shall designate in writing one or more of its employees who are authorized to act by and on behalf of the Village to transmit instructions, receive information and interpret and define the Village's policy and decisions with respect to the Services to be provided pursuant to this Agreement.

14.2 The Company shall designate or appoint one or more Company representatives who are authorized to act on behalf of and to bind the Company regarding all matters involving the conduct of its performance pursuant to this Agreement.

15.0 All Prior Agreements Superseded

This Agreement incorporates and includes all prior negotiations, correspondence, conversations, agreements or understandings applicable to the matters contained herein and the Parties agree that there are no commitments, agreements or understandings concerning the subject matter of this Agreement that are not contained in this document or its designated exhibits. Accordingly, it is agreed that no deviation from the terms hereof shall be predicated upon any prior representations or agreements, whether oral or written.

16.0 Modifications, Amendments or Alterations

No modification, amendment or alteration in the terms or conditions contained herein shall be effective unless agreed to and executed in writing by both parties to this Agreement in a form acceptable to the Village.

This writing and exhibits contain the entire Contract of the Parties. No representations were made or relied upon by either Party, other than those that are expressly set forth. No agent, employee, or other representative of either Party is empowered to modify and amend the terms of this Contract, unless executed in writing with the same formality as the execution of this Contract. No waiver of any provision of this Contract shall be valid or enforceable unless such waiver is in writing and signed by the Party granting such waiver.

DRAFT

17.0 Independent Contractor

Nothing stated in this Agreement is intended or should be construed in any manner as creating or establishing a relationship of co-partners between the Parties, or as constituting the Company (including its officers, employees, and agents) as the agent, representative, or employee of the Village for any purpose, or in any manner, whatsoever. The Company is to be and shall remain forever an independent Company with respect to all Services performed under this Agreement. The Company shall not pledge the Village's credit or make the Village a guarantor of payment or surety for any contract, debt, obligation, judgment, lien or any form of indebtedness and the Company shall have no right to speak for or bind the Village in any manner.

18.0 Public Records Law

(a) The Company acknowledges the Village's obligations under Article I, Section 24, of the Florida Constitution and under Chapter 119, Florida Statutes, to release public records to members of the public upon request and comply in the handling of the materials created under this Agreement. The Company further acknowledges that the constitutional and statutory provisions control over the terms of this Agreement. In association with its performance pursuant to this Agreement, the Company shall provide all requested documents to the Village which shall determine whether to release them or exert a claim for exemption or privilege.

(b) Without in any manner limiting the generality of the foregoing, to the extent applicable, the Company acknowledges its obligations to comply with Section 119.0701, Florida Statutes, with regard to public records, and shall:

(1) keep and maintain public records required by the Village to perform the services required under this Agreement;

(c) **IF THE COMPANY HAS QUESTIONS REGARDING THE APPLICATION OF CHAPTER 119, FLORIDA STATUTES, TO THE COMPANY'S DUTY TO PROVIDE PUBLIC RECORDS RELATING TO THIS AGREEMENT, CONTACT THE VILLAGE'S CUSTODIAN OF PUBLIC RECORDS AT:**

Village of Palmetto Bay
Clerk's Office
9705 E. Hibiscus Street
Palmetto Bay, FL 33157

DRAFT

305-259-1234
marocha@palmettobay-fl.gov

19.0 Compliance with Laws and Regulations

In providing all Services pursuant to this Agreement, the Company shall abide by all statutes, ordinances, rules, and regulations pertaining to or regulating the provisions of such Services, including those now in effect and hereafter adopted. Any violation of said statutes, ordinances, rules, or regulations shall constitute a material breach of this Agreement and shall entitle the Village to terminate this Agreement immediately upon delivery of written notice of termination to the Company.

20.0 Governing Law and Venue

This Agreement shall be governed in all respects by the laws of the State of Florida and any litigation with respect thereto shall be brought only in the courts of Miami-Dade County. Each Party shall be responsible for its own attorneys' fees and other legal costs and expenses.

21.0 Notices

Whenever either Party desires to give notice unto the other, it must be given by written notice, delivered (i) in person, (ii) via registered or certified United States mail, postage prepaid with return receipt requested, or (iii) via nationally recognized overnight delivery service, and addressed to the Party for whom it is intended at the place last specified by each Party. The place for giving of notice shall remain such until it is changed by written notice delivered in compliance with the provisions of this Section 22. For the present, the Parties designate the following as the respective places for giving of notice, to wit:

For Village: **Nick Marano**
Village of Palmetto Bay
9705 E. Hibiscus Street
Palmetto Bay, FL 33157

For Company:

DRAFT

22.0 Severability

The invalidity, illegality, or unenforceability of any provision of this Agreement, or the occurrence of any event rendering any portion or provision of this Agreement void, shall in no way affect the validity or enforceability of any other portion or provision of the Agreement; any void provision shall be deemed severed from the Agreement and the balance of the Agreement shall be construed and enforced as if the Agreement did not contain the particular portion or provision held to be void. The Parties further agree to reform the Agreement to replace any stricken provision with a valid provision that comes as close as possible to the intent of the stricken provision. The provisions of this section shall not prevent the entire Agreement from being void should a provision which is of the essence of the Agreement be determined to be void.

23.0 Annual Appropriations

Company acknowledges that during any fiscal year the Village shall not expend money, incur any liability, or enter into any agreement which by its terms involves the expenditure of money in excess of the amounts budgeted as available for expenditure during such fiscal year. Accordingly, any agreement, verbal or written, the Village may make in violation of this fiscal limitation is null and void, and no money may be paid on such agreement. The Village may enter into agreements whose duration exceeds one year; however, any such agreement shall be executory only for the value of the services to be rendered which the Village agrees to pay as allocated in its annual budget for each succeeding fiscal year. Accordingly, the Village's performance and obligation to pay the Company under this Agreement is contingent upon annual appropriations being made for that purpose.

24.0 Unauthorized Alien(s)

The Company shall not employ or utilize unauthorized aliens in the performance of the Services provided pursuant to this Agreement. The Village shall consider the employment or utilization of unauthorized aliens a violation of Section 274A(e) of the Immigration and Naturalization Act (8 U.S.C. 1324a) and a cause for the Village's unilateral termination of this Agreement. When delivering executed counterparts of this Agreement to the Village, the Company shall also deliver a completed and executed counterpart of the attached "AFFIDAVIT CERTIFICATION IMMIGRATION LAWS" form.

25.0 Company Representations

25.1 The Company hereby represents and warrants the following to the Village:

DRAFT

25.1.1 Company is a corporation that is duly organized and existing in good standing under the laws of the State of Florida with full right and authority to do business within the State of Florida.

25.1.2 Company's performance under this Agreement will not violate or breach any contract or agreement to which the Company is a party or is otherwise bound, and will not violate any governmental statute, ordinance, rule, or regulation.

25.1.3 Company has the full right and authority to enter into this Agreement and to perform its obligations in accordance with its terms.

25.1.4 Company now has and will continue to maintain all licenses and approvals required to conduct its business, and that it will at all times conduct its business activities in a reputable manner.

25.1.5 Company has no obligation or indebtedness that would impair its ability to fulfill the terms of this Agreement.

25.1.6 Company has the personnel and experience necessary to perform all Services in a professional and workmanlike manner.

25.1.7 Company shall exercise the same degree of care, skill, and diligence in the performance of the Services as provided by a professional of like experience, knowledge and resources, under similar circumstances.

25.1.8 Company shall, at no additional cost to Village, re-perform those Services which fail to satisfy the foregoing standard of care or which otherwise fail to meet the requirements of this Agreement.

25.1.9 Each individual executing this Agreement on behalf of the Company is authorized to do so.

26.0 Default and Remedy

If the Company materially defaults in its obligations under this Agreement and fails to cure the same within fifteen (15) days after the date the Company receives written notice of the default from the Village, then the Village shall have the right to (i) immediately terminate this Agreement by delivering written notice to the Company, and (ii) pursue any and all remedies available in law, equity, and under this Agreement. If the Village materially defaults in its obligations under this Agreement and fails to cure the same within fifteen (15) days after the date the Village receives written notice

DRAFT

of the default from the Company, then the Company shall have the right to immediately terminate this Agreement by delivering written notice to the Village. Upon any such termination, the Village shall pay the Company the full amount due and owing for all Services performed through the date of Agreement termination.

27.0 Limitation of Liability

The Village desires to enter into this Contract only if in so doing the Village can place a limit on its liability for any cause of action for breach of this Contract, so that its liability for any such breach never exceeds the sum of $_____. The Company hereby expresses its willingness to enter into this Contract with a $_____ limitation on recovery for any action for breach of contract. According, and in consideration of the separate consideration of $_____, the receipt of which is hereby acknowledged, the Village shall not be liable to the Company for damages to the Company in an amount in excess of $_____2, for any action for breach of contract arising out of the performance non-performance of any obligations imposed upon the Village by this Contract. Nothing contained in this paragraph or elsewhere in this Contract is in any way intended to be a waiver of limitation placed upon the Village's liability as set forth in Florida Statutes Section 768.28.

IN NO EVENT SHALL THE VILLAGE BE LIABLE TO THE COMPANY FOR INDIRECT, INCIDENTAL, CONSEQUENTIAL, SPECIAL, EXEMPLARY, OR PUNITIVE DAMAGES OF ANY KIND OR NATURE, INCLUDING LOSS OF PROFIT, WHETHER FORESEEABLE OR NOT, ARISING OUT OF OR RESULTING FROM THE NONPERFORMANCE OR BREACH OF THIS AGREEMENT BY THE VILLAGE WHETHER BASED IN AGREEMENT, COMMON LAW, WARRANTY, TORT, STRICT LIABILITY, CONTRIBUTION, INDEMNITY OR OTHERWISE.

28.0 Waiver

A waiver by either the Village or Company of any breach of this Agreement shall not be binding upon the waiving party unless such waiver is in writing. In the event of a written waiver, such a waiver shall not affect the waiving party's rights with respect to any other or further breach of this Agreement. The making or acceptance of a payment by either Party with the knowledge of the other Party's existing default or breach of the Agreement shall not waive such default or breach, or any subsequent default or breach of this Agreement, and shall not be construed as doing so.

DRAFT

29.0 Attorneys' Fees and Costs

Each Party shall be responsible for its own legal and attorneys' fees, costs and expenses incurred in connection with any dispute or any litigation arising out of, or relating to this Agreement, including attorneys' fees, costs, and expenses incurred for any appellate or bankruptcy proceedings.

30.0 Force Majeure

Either Party hereunder may be temporarily excused from performance if an Event of Force Majeure directly or indirectly causes its nonperformance. An "Event of Force Majeure" is defined as any event which results in the prevention or delay of performance by a party of its obligations under this Agreement and which is beyond the reasonable control of the nonperforming party. It includes, but is not limited to fire, flood, earthquakes, storms, lightning, epidemic, war, riot, civil disturbance, sabotage, and governmental actions. Neither Party shall be excused from performance if non-performance is due to forces which are reasonably preventable, removable, or remediable and which the non-performing party could have, with the exercise of reasonable diligence, prevented, removed, or remedied prior to, during, or immediately after their occurrence. Within five (5) days after the occurrence of an Event of Force Majeure, the non-performing party shall deliver written notice to the other Party describing the event in reasonably sufficient detail, along with proof of how the event has precluded the non-performing party from performing its obligations hereunder, and a good faith estimate as to the anticipated duration of the delay and the means and methods for correcting the delay. The non-performing party's obligations, so far as those obligations are affected by the Event of Force Majeure, shall be temporarily suspended during, but no longer than, the continuance of the Event of Force Majeure and for a reasonable time thereafter as may be required for the non-performing party to return to normal business operations. If excused from performing any obligations under this Agreement due to the occurrence of an Event of Force Majeure, the non-performing party shall promptly, diligently, and in good faith take all reasonable action required for it to be able to commence or resume performance of its obligations under this Agreement. During any such time period, the non-performing party shall keep the other Party duly notified of all such actions required for it to be able to commence or resume performance of its obligations under this Agreement.

DRAFT

31.0 Key Personnel

The Company shall notify the Village if any of the Company's Key Personnel (as defined, below) change during the Term of the Agreement. To the extent possible, the Company shall notify the Village at least ten (10) days prior to any proposed change in its Key Personnel. At the Village's request the Company shall remove without consequence to the Village any of the Company's, subcontractors, agents or employees and replace the same with an appropriate substitute having the required skill and experience necessary to perform the Services. The Village shall have the right to reject the Company's proposed changes in Key Personnel. The following individuals shall be considered "Key Personnel:"

Name:

32.0 No Construction Against Drafter

The Parties acknowledge that this Agreement and all the terms and conditions contained herein have been fully reviewed and negotiated by the Parties. Accordingly, any rule of construction to the effect that ambiguities are to be resolved against the drafting Party shall not apply in interpreting this Agreement.

33.0 Employment Eligibility Verification (E-Verify)

A. Unless otherwise defined herein, terms used in this Section which are defined in Section 448.095, Florida Statutes, as may be amended from time to time, shall have the meaning ascribed in said statute.

B. Pursuant to Section 448.095(5), Florida Statutes, the Company hereto, and any subconsultant thereof, must register with and use the E-Verify system to verify the work authorization status of all new employees of the Company or subconsultant. The Company acknowledges and agrees that (i) the Village and the Company may not enter into this Agreement, and the Company may not enter into any subcontracts hereunder, unless each Party to this Agreement, and each Party to any subcontracts hereunder, registers with and uses the E-Verify system; and (ii) use of the U.S. Department of Homeland Security's E-Verify System and compliance with all other terms of this Certification and Section 448.095, Fla. Stat., is an express condition of this Agreement, and the Village may treat a failure to comply as a material breach of this Agreement.

C. By entering into this Agreement, the Company becomes obligated to comply with the provisions of Section 448.095, Fla. Stat., "Employment Eligibility," as amended from time to time.

This includes but is not limited to utilization of the E-Verify System to verify the work authorization status of all newly hired employees, and requiring all subconsultants to provide an affidavit attesting that the subconsultant does not employ, contract with, or subcontract with, an unauthorized alien. The Company shall maintain a copy of such affidavit for the duration of this Agreement. Failure to comply will lead to termination of this Agreement, or if a subconsultant knowingly violates the statute or Section 448.09(1), Fla. Stat., the subcontract must be terminated immediately. If this Agreement is terminated pursuant to Section 448.095, Fla. Stat., such termination is not a breach of contract and may not be considered as such. Any challenge to termination under this provision must be filed in the Eleventh Judicial Circuit Court of Florida no later than 20 calendar days after the date of termination. If this Agreement is terminated for a violation of Section 448.095, Fla. Stat., by the Company, the Company may not be awarded a public contract with the Village for a period of 1 year after the date of termination. The Company shall be liable for any additional costs incurred by the Village as a result of the termination of this Agreement. Nothing in this Section shall be construed to allow intentional discrimination of any class protected by law.

34.0 Noncoercive Conduct For Labor

The Company has complied with the requirements of Section 787.06(13), Florida Statutes, by having an officer or other authorized representative of the Company execute an Affidavit, which attests, under penalty of perjury, that it does not use coercion for labor or services, as defined in Section 787.06, Florida Statutes

35.0 Scrutinized Companies

The Company certifies that it and its subcontractors are not on the Scrutinized Companies that Boycott Israel List. Pursuant to Section 287.135, F.S., the Village may immediately terminate this Agreement at its sole option if the CONSULTANT or its subcontractors are found to have submitted a false certification; or if the CONSULTANT, or its subcontractors are placed on the Scrutinized Companies that Boycott Israel List or is engaged in the boycott of Israel during the term of the Agreement

36.0 Preservation of Village Property

The Company shall provide and install suitable safeguards, approved by the Village, to protect Village property from injury or damage. If Village property is injured or damaged resulting from the Company's operations, it shall be replaced or restored at the Company's expense. The property shall

be replaced or restored to a condition as good as when the Company began work. The Company shall keep the premises and surrounding area free from accumulation of debris and trash related to the Work. At the completion of the Work, the Company shall remove all construction equipment, machinery and surplus material and properly dispose of waste material.

37.0 Public and Employee Safety

Whenever the Company's operations create a condition hazardous to the public or Village employees, it shall, at its expense and without cost to the Village, furnish, erect, and maintain such fences, temporary railings, barricades, lights, signs and other devices and take such other protective measures as are necessary to prevent accidents or damage or injury to the public, Village employees or Village property.

38.0 Federal and State Tax

The Village is exempt from payment of Florida State Sales and Use Taxes. The Company shall not be exempted from paying sales tax to its suppliers for materials used to fulfill contractual obligations with the Village, nor is the Company authorized to use the Village's Tax Exemption Number in securing such materials The Company shall be responsible for payment of its own and its share of its employee taxes, Workers Compensation and Social Security benefits.

39.0 Conflict of Interest

The Company agrees to adhere to and be governed by the Village's Conflict of Interest Ordinance 2-121, *et seq.*, which is incorporated by reference as if fully set forth.

40.0 Entire Agreement

No statements, representations, or warranty, either written or oral, from whatever source arising, except as expressly stated in this Agreement, shall have any legal validity between the Parties or be binding upon either. The Parties acknowledge that this Agreement contains the entire understanding and agreement of the Parties.

41.0 Captions and Paragraph Headings

Captions and paragraph headings contained in this Agreement are for convenience and reference only and in no way define, describe, extend, or limit the scope and intent of this Agreement, nor the intent of any of its provisions.

DRAFT

42.0 Joint Preparation

The preparation of this Contract has been a joint effort of the Parties and shall not be construed more severely against either Party. It is the Parties' further intention that this Agreement shall be construed liberally to achieve its intent.

43.0 Counterparts

This Agreement may be executed in one or more counterparts, each of which shall be deemed an original, but all of which shall constitute one and the same Agreement.

44.0 Warranty

The Company shall provide the Village will all applicable EXPRESS and IMPLIED warranties received by the manufacturer and/or the supplier of the materials the Company uses to carry out the Agreement. The Company specifically agrees that the warranties of MERCHANTIBILITY AND FITNESS FOR PARTICULAR PURPOSES SHALL BE APPLICABLE to work and the materials supplied.

45.0 Iron and Steel in Public Works Projects

Section 255.0993, Florida Statutes, requires local governmental entities to include a requirement in contracts for projects using any State funds that certain iron or steel products be produced in the United States, authorizes the minimal use of foreign steel and iron materials in certain circumstances, and exempts specified products from the requirement.

Should the use of American iron or steel causes an increase of total project cost by twenty (20) percent, or if materials are not readily available, or materials cannot be purchased in sufficient quantities.

DRAFT

IN WITNESS WHEREOF, the Parties hereto have executed this Agreement as of the Effective Date.

ATTEST:

By: _____
Village Clerk

By: _____
Village Manager

Date Signed By Village_____

Reviewed as to form and legal sufficiency for the sole use and benefit of the Village:

_____
Village Attorney Date

ATTEST:

By: _____

_____
PRINT NAME

_____
TITLE

Date: _____

SEAL

Company Name:

By: _____

_____
PRINT NAME

_____
TITLE

Attachments to this Solicitation

Exhibit "A": SW 82nd Bike Lanes Improvements Engineering Plans **(.PDF FILE)**

Exhibit "B": SW 82nd Bike Lanes Improvements Drainage Memorandum **(.PDF FILE)**

(Total of 2 .pdf to download with solicitation)

Solicitation No. ITB 2026-11-002
SW 82nd Bike Lanes Improvements
Submittal Deadline: February 5th, 2026 – 11:00 AM

Firm: Pabon Engineering, Inc

Address: 13028 SW 128 Street
Miami, Florida 33186
(305) 972-8445

Qualifier: Anibal Pabon
pabonengineering@outlook.com
(305) 218-3547

License(s): CUC1223949
E1800135

Invitation to Bid
Village of Palmetto Bay
9705 East Hibiscus Street
Palmetto Bay, Florida 33157

TITLE:

SW 82nd Bike Lanes Improvements

ITB NO.:

2026-11-002

DUE DATE:

Thursday, February 5th, 2026 on or before 11:00 a.m. EST (Municipal Building)

ISSUED: Tuesday, January 20th, 2026

CONTACT PERSON:

Procurement Specialist
Alessia Bencomo
Finance Department – Procurement Division
abencomo@palmettobay-fl.gov

SECTION 1.0: Advertisement

INVITATION TO BID (ITB)
SW 82nd Bike Lanes Improvements
No. 2026-11-002

The Village of Palmetto Bay is seeking bids from a qualified Company to provide improvements to SW 82nd Bike Lanes. The Village will **receive sealed bids no later than 11:00 a.m.** on or before **Thursday, February 5th, 2026** (late submittals, email submittals, and facsimile submissions will not be accepted) **by the Village Clerk at the Municipal Center located at 9705 East Hibiscus Street, Palmetto Bay, Florida 33157.** All bids received will be publicly opened and read aloud on said date and time before the Procurement Specialist.

To be considered, all interested Parties must request copies of the bid documents and submit one (1) original and a flash drive containing a copy of the entire original submission in one (1) sealed package clearly marked with the bid titled "**SW 82nd Bike Lanes Improvements ITB# 2026-11-002**". **THE PACKAGE MUST BE CLEARLY LABELED TO THE ATTENTION OF THE VILLAGE CLERK, INCLUDING THE PACKAGE TITLE.** A bid guaranty in the amount of five percent (5%) of the bid must accompany each bid in accordance with the Invitation to Bid (ITB). The respondent shall bear all costs associated with the preparation and submission of the response to the solicitation.

A non-mandatory pre-bid meeting is scheduled for **Tuesday, January 27th, 2026, at 11:00 a.m.** at the Village Municipal Center at 9705 E. Hibiscus Street, Palmetto Bay, FL 33157. The bid documents may be obtained on or after **Tuesday, January 20th, 2026**. The bid document can be obtained by visiting our website www.palmettobay-fl.gov and by clicking Bids & RFP's. If you cannot download the documents please contact Alessia Bencomo, Procurement Division, abencomo@palmettobay-fl.gov.

No bid shall be withdrawn after the opening of the bid without the consent of the Village for a period of sixty (60) days after the scheduled time of opening and reading bids. The Village reserves the right to reject any and all bids or parts thereof, to terminate the process at any time, rebid the Project, waive any informalities, technicalities or irregularities, to disregard all non-conforming, conditional or counter-bids, to award in whole or in part to one or more respondents, or take any other such actions that may be deemed in the best interest of the Village.

Section 5.0: Bid Submission Requirements

BID SUBMITTAL CHECKLIST

In order to be responsive, the bidder must submit the following items:

A. **One (1) sealed envelope which includes:** One (1) original and a flash drive of your submittal no later than 11:00 a.m. EST February 5th, 2026.

Please be sure that if the package is mailed through FedEx, UPS, USPS, etc., that the package is addressed/labeled to the below department and address. The bid inside the package should also be addressed/labeled to the below department and address.

Village of Palmetto Bay
Village Clerk's Office
9705 E. Hibiscus Street
Palmetto Bay, FL, 33157

B. **Signed and completed forms from *Section 8*:**

Introduction letter with contact information
Years in Business
Lead team Information
Bid Form
5% Bid Bond
Section 8 (Required Bid Submittal Forms)
Addendum Acknowledgement

C. **Bidders are required to acknowledge receipt of any formal Addendum by signing the Addendum and including it with the bid submission.** A Bidder's failure to include a signed formal Addendum in its bid submission may deem its bid non-responsive.

PABON ENGINEERING, INC

MINIMUM QUALIFICTIONS OF BIDDERS

License Requirements:

Pabon Engineering, Inc. has the authorization to conduct business and holds an Underground Utility Contractor's license for the installation of water distribution systems, water main extensions or similar type work and valid certifications of competency of qualifications, issued by the State of Florida Construction Industry Licensing Board, pursuant to the provisions of Section 489.115 of the Florida Statutes. License No. CUC1223949. Pabon Engineering, Inc. also holds a Paving Engineering license from the Construction Trades Qualifying Board Business Certificate of Competency. License No. E1800135

Experience:

Pabon Engineering, Inc. has a minimum of ten (10) years of experience, under its current business name. (List of Completed Project Experience attached)

Equipment:

Pabon Engineering, Inc. will have available adequate equipment and facilities. (Equipment List attached.)

Financial Statements:

Pabon Engineering, Inc. Financial Statements attached.

Officers:

Anibal Pabon, President

Milagro Pabon, Secretary, Treasurer

Key Members:

- Anibal Pabon, Construction Manager– Oversee entire project onsite and in office. Experience: Over 20 yrs.
- Alejandro Balsinde – Project Manager – Will plan, budget, oversee all aspects of project. Experience: Over 10 yrs.
- Emily Cortes – Assistant Project Manager – MOT Coordinator, Permitting, etc. Experience: 10 yrs.
- Jesus Martinez – Site Superintendent – Plan, coordinate, schedule and supervise construction project. Experience: 20 yrs.
- Damien Lucero – Foreman – Coordinates daily tasks. Experience: 20 yrs.
- Mauro Velasquez – Pipe Layer – Experience: Over 20 years.

Pabon Engineering, Inc. has a well-trained and competent organization which has done work of similar character and magnitude. An organizational structure as intended, including total manpower to complete the project.

13028 SW 128 ST Miami, FL. 33186▪Phone: 305.218.3547▪pabonengineering@outlook.com

PABON ENGINEERING, INC

Lead Team Information

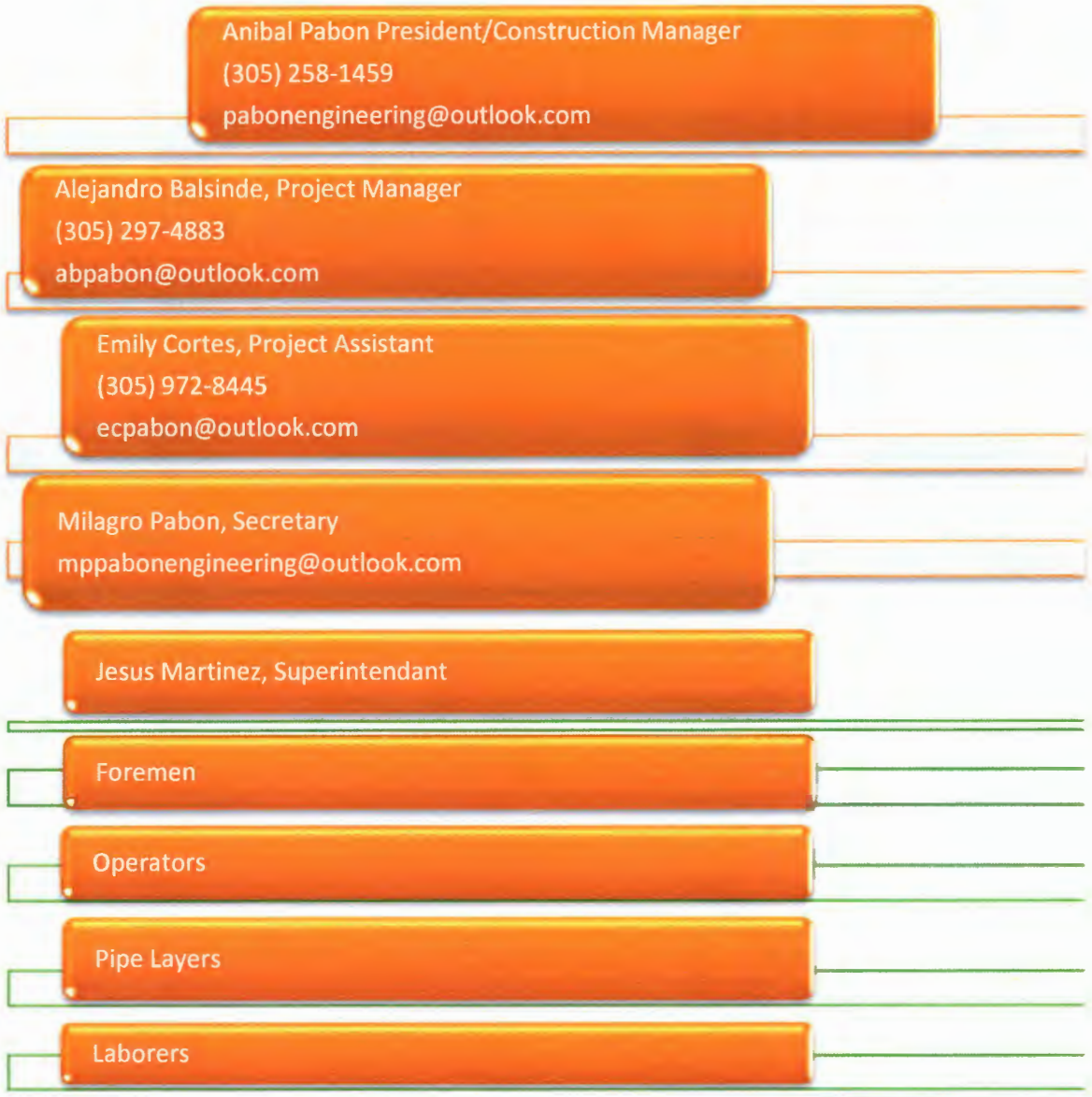

4.1:
BID FORM

The following Bid Form is presented to assist the Village in evaluating the bid. This Bid Form reflects estimated quantities for the Total Bid as described above. After award, the Village reserves the right to modify estimated quantities subject to the unit price and eliminate line items if necessary. Payment shall be made for the items listed on the Bid Form on the basis of the Work actually performed and completed.

Item No.	Description	Unit	Quantity	Unit Price	Total
1	Mobilization	LS	1	$64,000.00	$64,000.00
2	Maintenance of Traffic	LS	1	$58,000.00	$58,000.00
3	Storm Water Pollution Prevention Plan	LS	1	$7,510.00	$7,510.00
4	Site Restoration and Tie-In Grading	LS	1	$72,000.00	$72,000.00
5	Asphalt, SP-9.5, 1.5" Average Depth	SY	2200	$54.00	$118,800.00
6	Stabilized Subgrade, 12" Thick	SY	2200	$34.00	$74,800.00
7	Limerock Base, 8" Thick	SY	2200	$44.00	$96,800.00
8	Remove Existing Concrete, Asphalt, and Pavers	SY	930	$8.00	$7440.00
9	ADA Accessible Catch Basin Grate	EA	1	$3,200.00	$3,200.00
10	Utility Fixture, Valve Assembly, Adjust/Modify	LS	1	$3,400.00	$3,400.00
11	Mailbox Relocation	EA	1	$500.00	$500.00
12	Sign Relocation	EA	2	$400.00	$800.00
13	Sign and Post	EA	6	$800.00	$4,800.00
14	Concrete Sidewalk (6" thick max) (Sidewalk, Driveway, and Apron)	SY	190	$125.00	$23,750.00
15	Paver Driveway Restoration	LS	1	$8,200.00	$8,200.00
16	Pavement Marking	LS	1	$96,000.00	$96,000.00
				GRAND TOTAL	$640,000.00

Refer to pay item notes within contract plans for details of costs to be included within items.

The following Bid Item Notes apply to the bid items:

1. Bid Item 1 is a lump sum pay item for all mobilization costs and includes the construction of two (2) project signs that shall be displayed at approaches to the project area. The intent is that the sign will be freestanding. The sign shall display on both sides the project name, Village Logo, elected officials, and contact information. A detail of the sign is included in the plans. Shop drawings must be submitted for approval prior to ordering the project sign. Photos of the actual project sign must be submitted for approval prior to installation of the project signs.

   Mobilization will be paid at the following rates:
   a. 10% of contract completion - 25% of Mobilization.
   b. 25% of contract completion - 50% of Mobilization.
   c. 50% of contract completion - 100% of Mobilization.

2. Bid Item 2 is a lump sum pay item for a Maintenance of Traffic (MOT) and includes all pedestrian access maintenance. All crosswalks and sidewalks shall remain open and free of obstructions. Temporary painting for roadways and crosswalks shall be maintained throughout the project. Costs shall include the use of flagmen. Contractor to prepare and submit for review a MOT Plan per phase of construction. The MOT plan shall be prepared by an FDOT certified individual. No work shall begin until the MOT plan has been approved by the Village.
3. Bid Item 3 to include a complete stormwater pollution prevention plan (SWPPP). Notice of Intent fees and compliance with any SWPPP reporting. Include furnishing, installation, maintenance, and removal of items. This is a lump sum pay item to furnish, install, maintain, and remove floating turbidity barriers.
4. Bid Item 4 is a lump sum pay item for site restoration which includes the complete restoration of the roadway or driveways impacted by any construction activity adjacent to the roadway resurfacing project including but not limited to mobilization, clearing, and grubbing, striping removal, milling and resurfacing, asphalt, limerock, and base removal, limerock rework, asphalt overlay, utility adjustments, mailbox relocations, etc. Any swale areas impacted by the contractor outside of those indicated on the plans will be restored by the contractor at no additional cost to the Village. The pay item includes but is not limited to sod, landscaping, trees, excavation, new fill, limerock base preparation, grading, tamping, irrigation, driveway aprons (asphalt, pavers, stamped concrete, etc.), sidewalks, mailboxes, fences, pipes, curbs, etc. to an equal or better condition prior to construction. The contractor shall include the costs associated with a preconstruction video to confirm existing conditions. Any damage not confirmed by preconstruction video will be repaired at no additional cost to the Village.
5. Bid Item 5 includes the asphalt final overlay to the extents shown on the plans or lift of asphalt (minimum 1.5") to final grade. Pavement overlay to provide smooth and continuous grading through the entire asphalt overlay process to avoid areas of standing water. This item also includes the final lift of asphalt over all trench restoration.
6. Bid Item 6 and 7 include all costs associated with the stabilized subgrade and limerock base.
7. Bid Item 8 includes all costs associated with removal and disposal of existing concrete, asphalt, and pavers and includes saw cutting.
8. Bid Items 9 includes all costs associated with the installation of ADA accessible catch basin grates.
9. Bid Item 10 includes all costs associated with valve adjustments.
10. Bid Item 11 includes all costs associated with the relocation of existing mailboxes as needed.
11. Bid Item 12 includes all costs associated with the relocation of existing signs.
12. Bid Item 13 includes all costs associated with new signs and their installation.
13. Bid Item 14 includes all costs associated with installing concrete pavements to include concrete sidewalks, driveways, and aprons up to 6" thick.
14. Bid Item 15 includes all costs associated with the restoration of paver driveways. Contractor is responsible of replacing pavers in the case that pavers break.
15. Bid Item 16 is a lump sum pay item for pavement marking which includes all costs associated with, thermoplastic pavement markings, including temporary pavement markings prior to thermoplastic, and reflective pavement markers (RPMs).

Total Bid Amount..... $ 640,000.00

Total Bid Amount (in words): Six hundred forty thousand dollars and zero cents.

Signature of Official: _____

Name: Anibal Pabon

Title: President

Company: Pabon Engineering, Inc.

Date: 02/04/2026

BID BOND

KNOW ALL MEN BY THESE PRESENTS, that we, Pabon Engineering, Inc. (hereinafter called the Principal), and The Cincinnati Insurance Company (hereinafter called the Surety), a Corporation chartered and existing under the laws of the State of Ohio is authorized to do business in the State of Florida, and having an Agent resident therein, such Agent and Company acceptable to the Village of Palmetto Bay, are held and firmly bound unto the Village of Palmetto Bay (hereinafter called Village), in the sum of Five Percent of Total Amount Bid Dollars ($ 5% Of The Total Amount Bid), good and lawful money of the United States of America, to be paid upon demand of the said Village, to which payment well and truly to be made we bind ourselves, our heirs, executors, administrators, successors and assigns, jointly and severally and firmly by these presents.

WHEREAS; the above bounded Principal contemplates submitting or has submitted a Bid to the Village for furnishing all necessary labor, materials, equipment, machinery, tools, apparatus, services, all insurances and taxes, including but not limited to, state workmen's compensation and unemployment compensation insurance and taxes incurred in the performance of the Contract, and means of transportation for construction of:

VILLAGE OF PALMETTO BAY (the "Village")
SW 82nd Bike Lanes Improvements

for said Village, and;
WHEREAS; the Principal desires to file this Bond in accordance with law, in lieu of a certified Bidder's check otherwise required to accompany this Bid in the amount of five percent (5%) of the Base Bid.

NOW THEREFORE, the conditions of this obligation are such that, if the Bid be accepted, the Principal shall within ten (10) days after receipt of notification of the acceptance thereof, execute the Contract in accordance with the Invitation to Bid and Contact Documents and upon the terms, conditions and price set forth therein, in the form and manner required by the Village and execute sufficient and satisfactory Performance and Payment Bonds payable to the Village of Palmetto Bay, each in an amount of one hundred percent (100%) of the total Contract Price, as indicated in the Bid, in form and with security as set forth in the Invitation to Bid and Contract Documents satisfactory to the Village, then this obligation to be void, otherwise to be and remain in full force and virtue in law; and the Surety shall upon failure of the Principal to comply with any or all of the foregoing requirements within the time specified above immediately pay to the aforesaid Village upon demand the amount hereof in good and lawful money of the United States of America, not as a penalty but as liquidated damages.

IN WITNESS WHEREOF, THE said Pabon Engineering, Inc., as "Principal" herein has caused these presents to be signed in its name, by its _____ under its corporation seal, and the said The Cincinnati Insurance Company as "Surety" herein, has caused these presents to be signed in its name by its Attorney-In-Fact, under its corporate seal, this 4th day of February, 2026 and attested by its Power of Attorney, A.D., 2026.

ATTEST:

Pabon Engineering, Inc.

By: _____ (Title)
(Principal) Anibal Pabon, President

ATTEST: As Per Attached Power of Attorney

Sherrin Martinez

Geri Lynn Mirabal

The Cincinnati Insurance Company

By: _____
(Surety) Attorney-in-Fact
Jonathan A. Bursevich

(Attorneys-in-Fact who sign this bond must file with it a certified copy of their power-of-Attorney to sign said Bond).

THE CINCINNATI INSURANCE COMPANY

Fairfield, Ohio

POWER OF ATTORNEY

KNOW ALL MEN BY THESE PRESENTS: That THE CINCINNATI INSURANCE COMPANY, a corporation organized under the laws of the State of Ohio, and having its principal office in the City of Fairfield, Ohio, does hereby constitute and appoint

Warren M. Alter; David T. Satine and/or Jonathan A. Bursevich

of Miami Lakes, Florida its true and lawful Attorney(s)-in-Fact to sign, execute, seal and deliver on its behalf as Surety, and as its act and deed, any and all bonds, policies, undertakings, or other like instruments, as follows:

Any such obligations in the United States, up to
Twenty Million and No/100 Dollars ($20,000,000.00).

This appointment is made under and by authority of the following resolution passed by the Board of Directors of said Company at a meeting held in the principal office of the Company, a quorum being present and voting, on the 6th day of December, 1958, which resolution is still in effect:

> "RESOLVED, that the President or any Vice President be hereby authorized, and empowered to appoint Attorneys-in-Fact of the Company to execute any and all bonds, policies, undertakings, or other like instruments on behalf of the Corporation, and may authorize any officer or any such Attorney-in-Fact to affix the corporate seal; and may with or without cause modify or revoke any such appointment or authority. Any such writings so executed by such Attorneys-in-Fact shall be binding upon the Company as if they had been duly executed and acknowledged by the regularly elected officers of the Company."

This Power of Attorney is signed and sealed by facsimile under and by the authority of the following Resolution adopted by the Board of Directors of the Company at a meeting duly called and held on the 7th day of December, 1973.

> "RESOLVED, that the signature of the President or a Vice President and the seal of the Company may be affixed by facsimile on any power of attorney granted, and the signature of the Secretary or Assistant Secretary and the seal of the Company may be affixed by facsimile to any certificate of any such power and any such power of certificate bearing such facsimile signature and seal shall be valid and binding on the Company. Any such power so executed and sealed and certified by certificate so executed and sealed shall, with respect to any bond or undertaking to which it is attached, continue to be valid and binding on the Company."

IN WITNESS WHEREOF, THE CINCINNATI INSURANCE COMPANY has caused these presents to be sealed with its corporate seal, duly attested by its Vice President this 8th day of March, 2017.

THE CINCINNATI INSURANCE COMPANY

Stephen A. [illegible]

Vice President

STATE OF OHIO) ss:
COUNTY OF BUTLER)

On this 8th day of March, 2017, before me came the above-named Vice President of THE CINCINNATI INSURANCE COMPANY, to me personally known to be the officer described herein, and acknowledged that the seal affixed to the preceding instrument is the corporate seal of said Company and the corporate seal and the signature of the officer were duly affixed and subscribed to said instrument by the authority and direction of said corporation.

Mark J. Huller

MARK J. HULLER, Attorney at Law
NOTARY PUBLIC - STATE OF OHIO
My commission has no expiration date. Section 147.03 O.R.C.

I, the undersigned Secretary or Assistant Secretary of THE CINCINNATI INSURANCE COMPANY, hereby certify that the above is a true and correct copy of the Original Power of Attorney issued by said Company, and do hereby further certify that the said Power of Attorney is still in full force and effect.

GIVEN under my hand and seal of said Company at Fairfield, Ohio.
this 4 day of February, 2026

Steven D. Sam

Secretary

BN-1005 (3/17)

SECTION 8.0: Required Bid Submittal Forms

DRUG-FREE WORKPLACE CERTIFICATION

In order to have a drug-free workplace program, a business shall:

1) Publish a statement notifying employees that the unlawful manufacture, distribution, dispensing, possession, or use of a controlled substance is prohibited in the workplace and specifying the actions that will be taken against employees for violations of such prohibition.
2) Inform employees about the dangers of drug abuse in the workplace, the business' policy of maintaining a drug-free workplace, any available drug counseling, rehabilitation, and employee assistance programs, and the penalties that may be imposed upon employees for drug abuse violations.
3) Give each employee engaged in providing the commodities or contractual services that are under proposal a copy of the statement specified in Subsection (1).
4) In the statement specified in Subsection (1), notify the employees, that, as a condition of working of the commodities or contractual services that are under proposal, the employee will abide by the terms of the statement and will notify the employee of any conviction of, or plea of guilty or nolo contendere to, any violation of Chapter 893 or of any controlled substance law of the United States or any state, for a violation occurring in the workplace no later than five (5) days after such conviction.
5) Impose a sanction on, or require the satisfactory participation in a drug abuse assistance or rehabilitation program, if such is available in the employee's community, by any employee who is so convicted.
6) Make a good faith effort to continue to maintain a drug-free workplace through implementation of this section.

As the person authorized to sign the statement, I certify that this Company complies fully with the above requirements.

Signature of Official: _____

Name (typed): Anibal Pabon

Title: President

Company: Pabon Engineering, Inc.

Date: 02/04/2026

SUBCONTRACTOR LIST

The Company shall list all proposed Subcontractors to be used on this project if they are awarded the Contract.

Classification of Work	Subcontractor Name	Address	Telephone and Fax
TBD			

REFERENCES

Each bid must be accompanied by a list of at least ***three (3)*** references from current customers, preferably in the public sector, which shall include all the information requested below. **The Village should not be listed as one of the references provided.**

VILLAGE OF PALMETTO BAY - REFERENCE FORM

Solicitation Information: SW 82nd Bike Lanes Improvements
Invitation to Bid No. 2026-11-002

Name of Company: Pabon Engineering, Inc.

To Whom it May Concern,
The above reference vendor is submitting on a proposal solicitation or use of bid that has been issued by the Village of Palmetto Bay. We require that the consultant provide written references with their proposal submission and by providing you with this document the vendor is requesting that you provide the following reference information. We would appreciate you providing the information requested below as well as any other information you feel is pertinent:

Contracted Services Information:

Scope of Work: RPQ T-2740R Installation of a 12-inch Water Main along SW 3rd Street between SW 2nd Ave and Biscayne Blvd underneath the Metro Mover Pathway

Initial Value of Contract: $1,443,562.34 Final Value of Contract: $1,443,562.34

Length of Contract: 240 days

Would you enter into a contract with the Company in the future? ✓ Yes ____ No

Were the services provided acceptable and of quality standards: ✓ Yes ____ No

Was the Company responsive to your requests and resourceful with the task? ✓ Yes ____ No

Did the Company keep you fully informed of any updates and/or concerns related to the contracted services?

✓ Yes ____ No

If you responded no to any of the above please provide details:

Comments:

Name of Public Entity/Company: Miami Dade County Water & Sewer Department

Name of Individual completing this form: Yamirys Battle

Signature: _____ Title: Construction Projects Supervisor 1

Telephone: (305) 215-9243 Email: yamirys.battle@miamidade.gov

Thank you for your support in helping us evaluate our solicitation responses.

Sincerely,
Alessia Bencomo, Procurement Specialist

REFERENCES

Each bid must be accompanied by a list of at least ***three (3)*** references from current customers, preferably in the public sector, which shall include all the information requested below. **The Village should not be listed as one of the references provided.**

VILLAGE OF PALMETTO BAY - REFERENCE FORM

Solicitation Information: SW 82nd Bike Lanes Improvements
Invitation to Bid No. 2026-11-002

Name of Company: Pabon Engineering, Inc.

To Whom it May Concern,
The above reference vendor is submitting on a proposal solicitation or use of bid that has been issued by the Village of Palmetto Bay. We require that the consultant provide written references with their proposal submission and by providing you with this document the vendor is requesting that you provide the following reference information. We would appreciate you providing the information requested below as well as any other information you feel is pertinent:

Contracted Services Information:

Scope of Work: Miami Springs water system fire flow and water service improvements Phase 2 furnish and install 12-inch DI water main. RPQ T2447

Initial Value of Contract: $2,632,244.00 Final Value of Contract: $2,897,482.29

Length of Contract: 365 days

Would you enter into a contract with the Company in the future? X Yes ____ No

Were the services provided acceptable and of quality standards: X Yes ____ No

Was the Company responsive to your requests and resourceful with the task? X Yes ____ No

Did the Company keep you fully informed of any updates and/or concerns related to the contracted services?

X Yes ____ No

If you responded no to any of the above please provide details:

Great company to work with, they take pride in their work

Comments:

Name of Public Entity/Company: Miami-Dade Water and Sewer Department

Name of Individual completing this form: Pearle Khadar

Signature: _____ Title: W&S Pump Stations Const. Supervisor 2

Telephone: 305-323-3900 Email: pearle.khadar@miamidade.gov

Thank you for your support in helping us evaluate our solicitation responses.

Sincerely,
Alessia Bencomo, Procurement Specialist

REFERENCES

Each bid must be accompanied by a list of at least ***three (3)*** references from current customers, preferably in the public sector, which shall include all the information requested below. **The Village should not be listed as one of the references provided.**

VILLAGE OF PALMETTO BAY - REFERENCE FORM

Solicitation Information: SW 82nd Bike Lanes Improvements
Invitation to Bid No. 2026-11-002

Name of Company: Pabon Engineering, Inc.

To Whom it May Concern,
The above reference vendor is submitting on a proposal solicitation or use of bid that has been issued by the Village of Palmetto Bay. We require that the consultant provide written references with their proposal submission and by providing you with this document the vendor is requesting that you provide the following reference information. We *would appreciate you providing the information requested below as well as any other information you feel is pertinent:*

Contracted Services Information:

Scope of Work: The construction and installation of drainage structures 660 LF of 18-inch French drainpipe; 70 LF of 15-inch pipe culvert; (7) 48-inch catch basins. Asphalt restoration for all pipe installation and milling & resurfacing of approximately 100 SY. Remove and replace 230 SY of concrete sidewalk/driveways. Restoring 750 SY of sod.

Initial Value of Contract: $395,000.00 Final Value of Contract: $394,998.28

Length of Contract: 90 days

Would you enter into a contract with the Company in the future? X Yes _____ No

Were the services provided acceptable and of quality standards: X Yes _____ No

Was the Company responsive to your requests and resourceful with the task? X Yes _____ No

Did the Company keep you fully informed of any updates and/or concerns related to the contracted services?
X Yes _____ No

If you responded no to any of the above please provide details:
N/A

Comments:

Pabon Engineering, Inc. was very responsive throughout construction and provided all required closeout documents requested in a timely manner.

Name of Public Entity/Company: Chen Moore and Associates

Name of Individual completing this form: Jessica Diaz, PE

Signature: Jessica Diaz Digitally signed by Jessica Diaz Date: 2026.02.05 09:15:11-05'00' Title: PE

Telephone: 954-730-0707 Email: jdiaz@chenmoore.com

Thank you for your support in helping us evaluate our solicitation responses.

Sincerely,
Alessia Bencomo, Procurement Specialist

ACKNOWLEDGEMENT, WARRANTY AND ACCEPTANCE

A. Company warrants that it is willing and able to comply with all applicable Village laws, rules and regulations.

B. Company warrants that they have read, understand and are willing to comply with all of the requirements of the ITB and the addendum/ addenda nos.

C. Company warrants that it will not delegate or sub-contract its responsibilities under an agreement without the prior written permission of the Council.

D. Company warrants that all information provided by it in connection with this bid is true and accurate.

E. CONTINGENCY FEE AND CODE OF ETHICS WARRANTY:

Company warrants that neither it, nor any principal, employee, agent, representative or family member has promised to pay, and Company has not, and will not, pay a fee for the amount of which is contingent upon the Village awarding this contract. Company warrants that neither it, nor any principal, employee, agent, representative has procured, or attempted to procure, this contract in violation of any of the provisions of the Village conflict of interest and code of ethics ordinances. Further, Company acknowledges that a violation of this warranty will result in the termination of the contract and forfeiture of funds paid, or to be paid, to the Company, if the Company is chosen for performance of the contract.

Signature of Official: _____

Name (typed): Anibal Pabon

Title: President

Company: Pabon Engineering, Inc.

Date: 02/04/2026

NON-COLLUSIVE AFFIDAVIT

STATE OF FLORIDA }
} ss.:
COUNTY OF MIAMI-DADE }

Anibal Pabon being first duly sworn, deposes and says that:

(1) He/she is the, (Owner, Partner, Officer, Representative or Agent) of: Pabon Engineering, Inc., the Company that has submitted the attached Bid;

(2) He/she is fully informed respecting the preparation and contents of the attached Bid and of all pertinent circumstances respecting such Bid;

(3) Such Bid is genuine and is not a collusive or a sham Bid;

(4) Neither the said Company nor any of its officers, partners, owners, agents, representatives, employees or parties in interest, including this affiant, have in any way colluded, conspired, connived or agreed, directly or indirectly, with any other Company or person to submit a collusive or sham response in connection with the work for which the attached bid has been submitted, or to refrain from responding in connection with such work, or have in any manner, directly or indirectly, sought by agreement or collusion, communication, or conference with any Company or person to fix this Bid or to secure through any collusion, conspiracy, connivance, or unlawful agreement, any advantage against the Village of Palmetto Bay, or any person interested in the proposed Work;

Signed, sealed and delivered
In the presence of

Signature of Official: _____

Name (typed): Anibal Pabon

Title: President

Company: Pabon Engineering, Inc.

Date: 02/04/2026

Continued Next Page

ACKNOWLEDGMENT

State of Florida)
) ss.:
County of Miami Dade)

The foregoing instrument was acknowledged before me **by means of** ✓ **physical presence or** _ **online notarization**, this 5th day of February, 2026, by Anibal Rabon. He/She was ✓ personally known, _____ or produced _____ as a form of identification.

WITNESS my hand and official seal

Denise Rangel
NOTARY PUBLIC, STATE OF FLORIDA

DENISE RANGEL
Notary Public - State of Florida
Commission # HH 663015
My Comm. Expires Apr 10, 2029
Bonded through National Notary Assn.

SWORN STATEMENT PURSUANT TO SECTION 287.133 (3)(a) FLORIDA STATUES, ON PUBLIC ENTITY CRIMES

THIS FORM MUST BE SIGNED AND SWORN TO IN THE PRESENCE OF A NOTARY PUBLIC OR OTHER OFFICIAL AUTHORIZED TO ADMINISTER OATHS.

1. This sworn statement is submitted to the Village of Palmetto Bay, Florida

By Anibal Pabon

For Pabon Engineering, Inc.

Whose business address is: 13028 SW 128 ST. Miami FL 33186

And (if applicable) its Federal Employer Identification Number (FEIN) is: 01-0569389

2. I understand that a "public entity crime" as defined In Paragraph 287.133(1)(g), Florida Statutes ,and as may be amended means a violation of any state or federal law by a person with respect to and directly related to the transaction of business with any public entity or with any agency or political subdivision of any other State or of the United States, including, but not limited to, any Proposal or contract for goods or services to be provided to any public entity or an agency or any political subdivision of any other state or of the United Sates and involving antitrust fraud, theft, bribery, collusion, racketeering, conspiracy, or material misrepresentation

3. I understand that "convicted" or "conviction"" as defined in Paragraph 287.133(1)(b), Florida Statutes means a finding of guilt or a conviction of a public entity crime, with or without an adjudication of guilt, in any federal or state trial court of record relating to charges brought by indictment or information after July 1, 1989, as a result or a jury verdict, non-jury trial, or entry of a plea or guilty or nab contenders.

4. I understand that an "affiliate" as defined in Paragraph 287.133(1)(a), Florida Statutes, and means:

A. A predecessor or successor of a person convicted of a public entity crime; or
B. An entity under the control of any natural person who is active in the management of the entity and who has been convicted of a public entity crime. The term "affiliate'" includes those officers, directors, executives, partners, shareholders, employees, members, and agents who are active in the management of an affiliate. The ownership by one person of shares constituting a controlling Interest in another person, ore pooling of equipment or income among persons when not for fair market value under an arm's length agreement, shall be a prima facie case that one person controls another person. A person who knowingly enters

into a joint venture with a person who has been convicted of a public entity crime in Florida during the preceding 36 months shall be considered an affiliate.

5. I understand that a "person" as defined in Paragraph 287.133(1)(e), Florida Statutes, means any natural person or entity organized under the laws or any state or of the United States with the legal power to enter into a binding contract and which Bids or applies to Bids on contracts for the provision of goods or services let by a public entity, or which otherwise transacts or applies to transact business with a public entity. The term "person" includes those officers, directors, executives, partners, shareholders, employees, members, and agents who are active in management of any entity.

Signed, sealed and delivered in the presence:

Signature of Official: _____

Name (typed): Anibal Pabon

Title: President

Company: Pabon Engineering, Inc.

Date: 02/04/2026

ACKNOWLEDGMENT

State of Florida)
) ss.:
County of Miami Dade)

The foregoing instrument was acknowledged before me **by means of** ✓ **physical presence or** _ **online notarization**, this 5th day of February, 2026, by Anibal Pabon. He/She was ✓ personally known, _____ or produced _____ as a form of identification.

WITNESS my hand and official seal

Denise Rangel
NOTARY PUBLIC, STATE OF FLORIDA

DENISE RANGEL
Notary Public - State of Florida
Commission # HH 663015
My Comm. Expires Apr 10, 2029
Bonded through National Notary Assn.

AMERICANS WITH DISABILITIES ACT (ADA)
DISABILITY NONDISCRIMINATION STATEMENT

THIS FORM MUST BE SIGNED AND SWORN TO IN THE PRESENCE OF A NOTARY PUBLIC OR OTHER OFFICIAL AUTHORIZED TO ADMINISTER OATHS.

This sworn statement is submitted to the VILLAGE OF PALMETTO BAY, FLORIDA

by: Anibal Pabon, President
(print individual's name and title)

for: Pabon Engineering, Inc.
(print name of entity submitting sworn statement)

whose business address is: 13028 SW 128 ST Miami FL 33186

and (if applicable) its Federal Employer Identification Number (FEIN) is: 01-0569389

I, being duly first sworn state: That the above named Company, corporation or organization is in compliance with and agreed to continue to comply with, and assure that any sub-contractor, or third party contractor under this project complies with all applicable requirements of the laws listed below including, but not limited to, those provisions pertaining to employment, provision of programs and services, transportation, communications, access to facilities, renovations, and new construction.

The American with Disabilities Act of 1990 (ADA), Pub. L. 101-336, 104 Stat 327, 42 USC 1210112213 and 47 USC Sections 225 and 661 including Title I, Employment; Title II, Public Services; Title III, Public Accommodations and Services Operated by Private entities; Title IV, Telecommunications; and Title V, Miscellaneous Provisions, and as any may be amended.

The Florida Americans with Disabilities Accessibility Implementation Act of 1993, Section 553.501-553.513, Florida Statutes:
The Rehabilitation Act of 1973, 229 USC Section 794;
The Federal Transit Act, as amended 49 USC Section 1612;
The Fair Housing Act as amended 42 USC Section 3601-3631.

Signature of Official: _____

Name (typed): Anibal Pabon

Title: President

Company: Pabon Engineering, Inc

Date: 02/04/2026

Continued Next Page

ACKNOWLEDGMENT

State of Florida)
) ss.:
County of Miami Dade)

The foregoing instrument was acknowledged before me **by means of** ✓ **physical presence or** _ **online notarization**, this 5th day of February, 2026, by Anibal Pabon. He/She was ✓ personally known, _____ or produced _____ as a form of identification.

WITNESS my hand and official seal

Denise Rangel
NOTARY PUBLIC, STATE OF FLORIDA

DENISE RANGEL
Notary Public - State of Florida
Commission # HH 663015
My Comm. Expires Apr 10, 2029
Bonded through National Notary Assn.

BUSINESS ENTITY AFFIDAVIT

Bidder or Company hereby recognizes and certifies that no elected official, or employee of the Village of Palmetto Bay (the "Village") shall have a financial interest directly or indirectly in this transaction or any compensation to be paid under or through this transaction, and further, that no Village employee, nor any elected or appointed officer (including Village board members) of the Village, nor any spouse, parent or child of such employee or elected or appointed officer of the Village, may be a partner, officer, director or proprietor of Bidder or Company, and further, that no such Village employee or elected or appointed officer, or the spouse, parent or child of any of them, alone or in combination, may have a material interest in the Company or Bidder. Material interest means direct or indirect ownership of more than five percent (5%) of the total assets or capital stock of the Company or Bidder. Any exception to these above-described restrictions must be expressly provided by applicable law or ordinance and be confirmed in writing by Village. Further, Bidder or Company recognizes that with respect to this transaction or bid, if any Bidder or Company violates or is a party to a violation of the ethics ordinances or rules of the Village, the provisions of Miami-Dade County Code Section 2-11.1, as applicable to Village, Village Charter Section 7.6 (Lobbyist), or the provisions of Chapter 112, part III, Fla. Stat., the Code of Ethics for Public Officers and Employees and as may be amended, such Bidder or Company may be disqualified from furnishing the goods or services for which the bid or proposal is submitted and may be further disqualified from submitting any future bids or proposals for goods or services to Village.

Accordingly, Bidder or Company completes and executes the Business Entity Affidavit form below. The terms "Bidder" or "Company," as used herein, include any person or entity making a bid proposal herein to Village or providing goods or services to Village.

I, Anibal Pabon being first duly sworn state:

The full legal name and business address of the person(s) or entity contracting or transacting business with the Village of Palmetto Bay ("Village") are (Post Office addresses are not acceptable), as follows:

01-0569389
Federal Employer Identification Number (If none, Social Security Number)

Pabon Engineering, Inc.
Name of Entity, Individual, Partners or Corporation

Doing Business As (If same as above, leave blank)

13028 SW 128 St. Miami FL 33186
Street Address Suite Village State Zip Code

Continued Next Page

OWNERSHIP DISCLOSURE AFFIDAVIT

1. If the contact or business transaction is with a corporation, the full legal name and business address shall be provided for each officer and director and each stockholder who holds directly or indirectly five percent (5%) or more of the corporation's stock. If the contract or business transaction is with a trust, the full legal name and address shall be provided for each trustee and each beneficiary. All such names and addresses are (Post Office addresses are not acceptable), as follows:

Full Legal Name	Address	Ownership
Anibal Pabon	13028 SW 128 St. Miami 33186	100 %
Milagro Pabon	14514 SW 142 Place Cir Miami 33186	%
		%

2. The full legal names and business address of any other individual (other than sub-contractors, material men, suppliers, laborers, or lenders) who have, or will have, any interest (legal, equitable, beneficial or otherwise) in the contract or business transaction with the Village are (Post Office addresses are not acceptable), as follows:

None

Signature of Official: _____

Name (typed): Anibal Pabon

Title: President

Company: Pabon Engineering, Inc.

Date: 02/04/2026

Continued Next Page

ACKNOWLEDGMENT

State of Florida)
) ss.:
County of Miami-Dade)

The foregoing instrument was acknowledged before me **by means of** ✓ **physical presence or** _ **online notarization**, this 9th day of February, 2026, by Anibal Pabon. He/She was ✓ personally known, _____ or produced _____ as a form of identification.

WITNESS my hand and official seal

Denise Rangel
NOTARY PUBLIC, STATE OF FLORIDA

DENISE RANGEL
Notary Public - State of Florida
Commission # HH 663015
My Comm. Expires Apr 10, 2029
Bonded through National Notary Assn.

ACKNOWLEDGMENT OF CONFORMANCE WITH OSHA STANDARDS

To the Village of Palmetto Bay,

We Pabon Engineering, Inc. Bidder, Proposer, or Company, hereby acknowledge and agree that we, as the Prime Company for Village of Palmetto Bay, Village of Palmetto Bay _____, ITB# 2026-11-002, as specified, have the sole responsibility for compliance with all the requirements of the Federal Occupational Safety and Health Act of 1970 and as may be amended, and all State and local safety and health regulations, and agree to indemnify and hold harmless the Village of Palmetto Bay, against any and all liability, claims, damages losses and expenses they may incur due to the failure of : _____

_____

(Sub-Contractor's Names) to comply with such act or regulation.

Signature of Official: _____

Name (typed): Anibal Pabon

Title: President

Company: Pabon Engineering, Inc.

Date: 02/04/2026

ACKNOWLEDGMENT

State of Florida)
) ss.:
County of Miami-Dade)

The foregoing instrument was acknowledged before me **by means of** ✓ **physical presence or** _ **online notarization**, this 5th day of February, 2026, by Anibal Pabon. He/She was ✓ personally known, _____ or produced _____ as a form of identification.

WITNESS my hand and official seal

_____
NOTARY PUBLIC, STATE OF FLORIDA

DENISE RANGEL
Notary Public - State of Florida
Commission # HH 663015
My Comm. Expires Apr 10, 2029
Bonded through National Notary Assn.

VILLAGE OF PALMETTO BAY
ANTI-KICKBACK AFFIDAVIT

STATE OF FLORIDA)
) ss.:
COUNTY OF Miami Dade)

I, the undersigned, hereby duly sworn, depose and say that no portion of the sum herein bid will be paid to any employees of the Village of Palmetto Bay, its elected officials, and Pabon Engineering, Inc. or its employees, as a commission, kickback, reward or gift, directly or indirectly by me or any member of my Company or by an officer of the corporation.

Signature of Official: _____

Name (typed): Anibal Pabon

Title: President

Company: Pabon Engineering, Inc.

Date: 02/04/2026

ACKNOWLEDGMENT

State of Florida)
) ss.:
County of Miami Dade)

The foregoing instrument was acknowledged before me **by means of** ✓ **physical presence or** _ **online notarization**, this 5th day of February, 2026, by Anibal Pabon. He/She was ✓ personally known, _____ or produced _____ as a form of identification.

WITNESS my hand and official seal

DENISE RANGEL
Notary Public - State of Florida
Commission # HH 663015
My Comm. Expires Apr 10, 2029
Bonded through National Notary Assn.

denise Rangel
NOTARY PUBLIC, STATE OF FLORIDA

STATEMENT OF PAST CONTRACT DISQUALIFICATIONS

The Bidder, Proposer, or Company shall state whether it or any of its officers or employees who have a proprietary interest in it, has ever been disqualified, removed, or otherwise prevented from bidding on, or completing a federal, state, or local government project because of the violation of law, a safety regulation, or for any other reason, including but not limited to financial difficulties, project delays, or disputes regarding work or product quality, and if so to explain the circumstances.

Do you have any disqualification as described in the above paragraph to declare?

Yes or No, If yes, explain the circumstances.

No

Executed on 5th of February at 8:00am under penalty of perjury of the laws of the State of Florida, that the foregoing is true and correct.

Signature of Official: _____

Name (typed): Anibal Pabon

Title: President

Company: Pabon Engineering, Inc.

Date: 02/04/2026

E-VERIFY AFFIDAVIT

STATE OF Florida

COUNTY OF Miami-Dade

I, Anibal Pabon (the individual attesting below), being duly authorized by and on behalf of Pabon Engineering, Inc. (hereinafter "Employer") after first being duly sworn hereby swears or affirms as follows:

1. Employer understands that E-Verify is the federal E-Verify program operated by the United States Department of Homeland Security and other federal agencies, or any successor or equivalent program used to verify the work authorization of newly hired employees pursuant to federal law in accordance with NCGS §64-25(5), and as the same may be amended.
2. Employer understands that Employers Must Use E-Verify. Each employer, after hiring an employee to work in the United States, shall verify the work authorization of the employee through E-Verify in accordance with NCGS §64-26(a), and as the same may be amended.
3. Employer's subcontractors will comply with E-Verify, and Employer will ensure compliance with E-Verify by any and all subcontractors subsequently hired by Employer.

This 4th day of February, 2026.

Signature of Affiant

Print or Type Name: Anibal Pabon

State of Florida)
) ss.:
County of Miami Dade)

The foregoing instrument was acknowledged before me **by means of** ✓ **physical presence or** _ **online notarization**, this 5th day of February, 2026, by Anibal Pardo. He/She was ✓ personally known, _____ or produced _____ as a form of identification.

Signed and sworn to (or affirmed) before me,
this the 5th day of February, 2026.
My Commission Expires: 04/10/2029

DENISE RANGEL
Notary Public - State of Florida
Commission # HH 663015
My Comm. Expires Apr 10, 2029
Bonded through National Notary Assn.

Denise Rangel
Notary Public

NHCS – E-Verify 081815

Foreign Country of Concern Attestation

Capitalized terms used herein have the definitions ascribed in section 287.138, F.S.

Name of Company is not owned by the government of a Foreign Country of Concern, is not organized under the laws of nor has its principal place of business in a Foreign Country of Concern, and the government of a Foreign Country of Concern does not have a Controlling Interest (twenty five percent (25%) or more) in the Company.

Under penalties of perjury, I declare that I have read the forgoing statement and that the facts stated in it are true.

Printed Name: Anibal Pabon

Title: President

Signature: 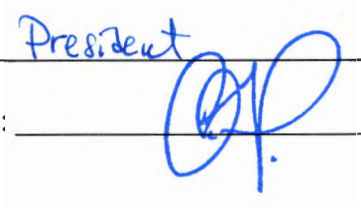

Date: 02/04/2026

Affidavit Attesting to Noncoercive Conduct for Labor or Services

Nongovernment Entity name: Pabon Engineering, Inc. ("**Company**")

Vendor FEIN: 010569389

Address: 13028 SW 128 ST

City: Miami State: FL Zip: 33186

Phone number: 305-218-3547 Email Address: pabonengineering@outlook.com

As a nongovernmental entity executing, renewing, or extending a contract with a government entity, **Company** is required to provide an affidavit under penalty of perjury attesting that **Company** does not use coercion for labor or services in accordance with Section 787.06, Florida Statutes.

As defined in Section 787.06(2)(a), coercion means:

1. Using or threating to use physical force against any person;
2. Restraining, isolating, or confining or threating to restrain, isolate, or confine any person without lawful authority and against her or his will;
3. Using lending or other credit methods to establish a debt by any person when labor or services are pledged as a security for the debt, if the value of the labor or services as reasonably assessed is not applied toward the liquidation of the debt, the length and nature of the labor or service are not respectively limited and defined;
4. Destroying, concealing, removing, confiscating, withholding, or possessing any actual or purported passport, visa, or other immigration document, or any other actual or purported government identification document, of any person;
5. Causing or threating to cause financial harm to any person;
6. Enticing or luring any person by fraud or deceit; or
7. Providing a controlled substance as outlined in Schedule I or Schedule II of Section 893.03 to any person for the purpose of exploitation of that person.

As a person authorized to sign on behalf of the **Company**, I certify that the **Company** does not use coercion for labor or services in accordance with Section 787.06.

Written Declaration

Under penalties of perjury, I declare that I have read the foregoing Affidavit and that the facts stated in it are true.

Printed Name: Anibal Pabon

Title: President

Signature:

Date: 02/04/2026

Form **W-9**
(Rev. August 2013)
Department of the Treasury
Internal Revenue Service

Request for Taxpayer Identification Number and Certification

Give Form to the requester. Do not send to the IRS.

Print or type
See Specific Instructions on page 2.

Name (as shown on your income tax return)
Pabon Engineering, Inc

Business name/disregarded entity name, if different from above

Check appropriate box for federal tax classification:
☐ Individual/sole proprietor ☐ C Corporation ☑ S Corporation ☐ Partnership ☐ Trust/estate

☐ Limited liability company. Enter the tax classification (C=C corporation, S=S corporation, P=partnership) ▶

☐ Other (see instructions) ▶

Exemptions (see instructions):
Exempt payee code (if any)
Exemption from FATCA reporting code (if any)

Address (number, street, and apt. or suite no.)
13028 SW 128 ST

Requester's name and address (optional)

City, state, and ZIP code
Miami FL 33186

List account number(s) here (optional)

Part I Taxpayer Identification Number (TIN)

Enter your TIN in the appropriate box. The TIN provided must match the name given on the "Name" line to avoid backup withholding. For individuals, this is your social security number (SSN). However, for a resident alien, sole proprietor, or disregarded entity, see the Part I instructions on page 3. For other entities, it is your employer identification number (EIN). If you do not have a number, see *How to get a TIN* on page 3.

Note. If the account is in more than one name, see the chart on page 4 for guidelines on whose number to enter.

Social security number
___ - ___ - ____

Employer identification number
01 - 0569389

Part II Certification

Under penalties of perjury, I certify that:

1. The number shown on this form is my correct taxpayer identification number (or I am waiting for a number to be issued to me), and
2. I am not subject to backup withholding because: (a) I am exempt from backup withholding, or (b) I have not been notified by the Internal Revenue Service (IRS) that I am subject to backup withholding as a result of a failure to report all interest or dividends, or (c) the IRS has notified me that I am no longer subject to backup withholding, and
3. I am a U.S. citizen or other U.S. person (defined below), and
4. The FATCA code(s) entered on this form (if any) indicating that I am exempt from FATCA reporting is correct.

Certification instructions. You must cross out item 2 above if you have been notified by the IRS that you are currently subject to backup withholding because you have failed to report all interest and dividends on your tax return. For real estate transactions, item 2 does not apply. For mortgage interest paid, acquisition or abandonment of secured property, cancellation of debt, contributions to an individual retirement arrangement (IRA), and generally, payments other than interest and dividends, you are not required to sign the certification, but you must provide your correct TIN. See the instructions on page 3.

Sign Here | **Signature of U.S. person** ▶ [signature] **Date** ▶ 02/04/2026

General Instructions

Section references are to the Internal Revenue Code unless otherwise noted.

Future developments. The IRS has created a page on IRS.gov for information about Form W-9, at *www.irs.gov/w9*. Information about any future developments affecting Form W-9 (such as legislation enacted after we release it) will be posted on that page.

Purpose of Form

A person who is required to file an information return with the IRS must obtain your correct taxpayer identification number (TIN) to report, for example, income paid to you, payments made to you in settlement of payment card and third party network transactions, real estate transactions, mortgage interest you paid, acquisition or abandonment of secured property, cancellation of debt, or contributions you made to an IRA.

Use Form W-9 only if you are a U.S. person (including a resident alien), to provide your correct TIN to the person requesting it (the requester) and, when applicable, to:

1. Certify that the TIN you are giving is correct (or you are waiting for a number to be issued),
2. Certify that you are not subject to backup withholding, or
3. Claim exemption from backup withholding if you are a U.S. exempt payee. If applicable, you are also certifying that as a U.S. person, your allocable share of any partnership income from a U.S. trade or business is not subject to the withholding tax on foreign partners' share of effectively connected income, and
4. Certify that FATCA code(s) entered on this form (if any) indicating that you are exempt from the FATCA reporting, is correct.

Note. If you are a U.S. person and a requester gives you a form other than Form W-9 to request your TIN, you must use the requester's form if it is substantially similar to this Form W-9.

Definition of a U.S. person. For federal tax purposes, you are considered a U.S. person if you are:

- An individual who is a U.S. citizen or U.S. resident alien,
- A partnership, corporation, company, or association created or organized in the United States or under the laws of the United States,
- An estate (other than a foreign estate), or
- A domestic trust (as defined in Regulations section 301.7701-7).

Special rules for partnerships. Partnerships that conduct a trade or business in the United States are generally required to pay a withholding tax under section 1446 on any foreign partners' share of effectively connected taxable income from such business. Further, in certain cases where a Form W-9 has not been received, the rules under section 1446 require a partnership to presume that a partner is a foreign person, and pay the section 1446 withholding tax. Therefore, if you are a U.S. person that is a partner in a partnership conducting a trade or business in the United States, provide Form W-9 to the partnership to establish your U.S. status and avoid section 1446 withholding on your share of partnership income.

ADDENDUM NO. 1

Date: February 2nd, 2026

To: All Interested Parties

From: Alessia Bencomo, Procurement Specialist
Village of Palmetto Bay
9705 E. Hibiscus Street
Palmetto Bay, Florida 33157

Re: Invitation to Bid No. 2026-11-002
SW 82nd Bike Lanes Improvements

This Addendum forms part of the Invitation to Bid (ITB) Package advertised on January 20th, 2026, and with a bid opening date of February 5th, 2026, with any amendments and/or additions noted below.

Question No. 1: When you have a chance can you send me the spec documents for this bid?

Response: *All documents can be found at SW 82nd Bike Lanes - DemandStar.*

Question No. 2: The plans for the bid mentioned above are not legible when I zoom in. Can we get a better copy? Or can I borrow the original set to have it scanned at a print shop?

Response: *Please be advised that I have uploaded another version of the engineering plans to OpenBids-DemandStar.*

Question No. 3: What is the budget or engineers estimate?

Response: *The Engineer's probable cost for this project is Two Hundred Eighty-Five Thousand Four Hundred Fifty Dollars and Zero Cents ($285,450.00) with a ten percent (10%) contingency included.*

Question No. 4: Do you have the bid docs for this opportunity? SW 82nd Bike Lanes.

Response: *Please be advised that I have uploaded another version of the engineering plans to OpenBids-DemandStar.*

Question No. 5: What is the engineer's estimate for the above-referenced project?

Response: *The Engineer's probable cost for this project is Two Hundred Eighty-Five Thousand Four Hundred Fifty Dollars and Zero Cents ($285,450.00) with a ten percent (10%) contingency included.*

Question No. 6: I would like to inquire about the licensing requirements for bidding on this project. Will an Underground Utilities & Excavation License from the state of Florida & Miami Dade County Paving Engineering Certificate of Competency meet the required qualifications?

Response: *Yes, this license would qualify for the scope of work on this project.*

Question No. 7: What is the size of the ADA Accessible Catch Basin Grate?

Response: *Please be advised that the bidder is recommended/suggested to evaluate the size as part of the bidder's due diligence/field assessment.*

Question No. 8: What is the estimated contract duration (number of calendar days) for the above-referenced project?

Response: *Six (6) months from Notice to Proceed (NTP).*

Question No. 9: Is there a possibility to close SW 82nd?

Response: *Daily closures in one direction will be allowed outside of peak times. MOT needs to be submitted for review.*

Question No. 10: Should the bike lanes be preformed or painted?

Response: *The bike lane markings need to follow FDOT Index 771-002, which specifies preformed thermoplastic.*

Question No. 11: In regards to the green bike lane, can FDOT approved green paint be used or do you require the installation of preform? If preform is required are there any specifications? (e.i Glass bead reflection)

Response: *The bike lane markings need to follow FDOT Index 771-002, which specifies preformed thermoplastic.*

Question No. 12: Do paver driveways need to be completely restored with new pavers or can we preserve existing pavers and reset?

Response: *Preserving existing pavers is allowed.*

Question No. 13: Do you have a designated staging area?

Response: *Proposed staging area should be provided with MOT submittal for our review.*

Question No. 14: Do we have to pay for permit fees?

Response: *Any permit fees paid will be reimbursed by the Village.*

Question No. 15: Will a certified arborist be needed to specify root pruning as roots encroach in the work limit area?

Response: *The Village has a certified arborist that will assist.*

Thank you,

A Bencomo

Alessia Bencomo
Procurement Specialist

9705 East Hibiscus Street, Palmetto Bay, Florida 33157
Tel: 305.259.1234 • Fax: 305.259.1290

ACKNOWLEDGEMENT OF ADDENDUM SOLICITATION

Amendment/Modification No: 1

Amendment of ITB No: 2026-11-002

Title: SW 82nd Bike Lanes Improvements

Name of Contractor Pabon Engineering, Inc.

Date Addendum Received 02/02/2026

Total Pages of Addendum including Acknowledgement 3

Print Name Anibal Pabon

Signature

All other terms and conditions stipulated in the original Village of Palmetto Bay Invitation to Bid shall remain in force. All addenda created will be incorporated into the final contract and must be acknowledged in all bids. This acknowledgement form must be included in the response and failure to sign and submit this form may result in rejection of your bid.

Ron DeSantis, Governor

Melanie S. Griffin, Secretary

Florida dbpr

STATE OF FLORIDA
DEPARTMENT OF BUSINESS AND PROFESSIONAL REGULATION

CONSTRUCTION INDUSTRY LICENSING BOARD

THE UNDERGROUND UTILITY & EXCAVATION CO HEREIN IS CERTIFIED UNDER THE PROVISIONS OF CHAPTER 489, FLORIDA STATUTES

PABON, ANIBAL

PABON ENGINEERING INC
13028 SW 128 STREET
MIAMI FL 33186

LICENSE NUMBER: CUC1223949

EXPIRATION DATE: AUGUST 31, 2026

Always verify licenses online at MyFloridaLicense.com

ISSUED: 08/17/2024

Do not alter this document in any form.

This is your license. It is unlawful for anyone other than the licensee to use this document.

707

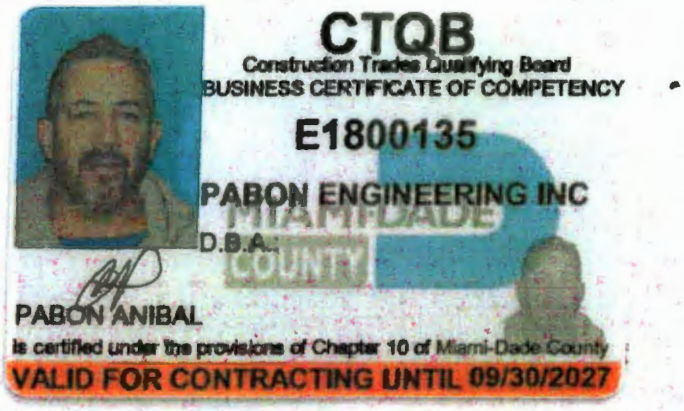

CTQB
Construction Trades Qualifying Board
BUSINESS CERTIFICATE OF COMPETENCY

E1800135

PABON ENGINEERING INC
D.B.A.:

PABON ANIBAL
Is certified under the provisions of Chapter 10 of Miami-Dade County
VALID FOR CONTRACTING UNTIL 09/30/2027

QUALIFYING TRADE(S)

0007 PAVING ENGINEERING



James D. Gascon, P.E.
Secretary of the Board
Miami-Dade County retains all property rights herein.

www.miamidade.gov/economy

Detail by Entity Name

Florida Profit Corporation
PABON ENGINEERING, INC.

Filing Information

Document Number	P01000122055
FEI/EIN Number	01-0569389
Date Filed	12/26/2001
State	FL
Status	ACTIVE
Last Event	REVOCATION OF VOLUNTARY DISSOLUT
Event Date Filed	03/17/2014
Event Effective Date	NONE

Principal Address

13028 SW 128 ST.
MIAMI, FL 33186

Changed: 10/17/2018

Mailing Address

13028 SW 128 ST.
MIAMI, FL 33186

Changed: 10/17/2018

Registered Agent Name & Address

PABON, ANIBAL, PRES.
11405 SW 252 Terr
Homestead, FL 33032

Name Changed: 04/22/2010

Address Changed: 03/21/2023

Officer/Director Detail

Name & Address

Title PD

Pabon, Anibal PRES.
11405 SW 252 Terr
Homestead, FL 33032

Title STD

Pabon, Milagro
13028 SW 128 ST
Miami, FL 33186

Annual Reports

2023	03/21/2023
2024	02/26/2024
2025	03/06/2025

Document Images

03/06/2025 – ANNUAL REPORT	View image in PDF format
02/26/2024 – ANNUAL REPORT	View image in PDF format
03/21/2023 – ANNUAL REPORT	View image in PDF format
03/07/2022 – ANNUAL REPORT	View image in PDF format
04/09/2021 – ANNUAL REPORT	View image in PDF format
02/24/2020 – ANNUAL REPORT	View image in PDF format
04/02/2019 – ANNUAL REPORT	View image in PDF format
04/04/2018 – ANNUAL REPORT	View image in PDF format
03/16/2017 – ANNUAL REPORT	View image in PDF format
03/28/2016 – ANNUAL REPORT	View image in PDF format
04/23/2015 – ANNUAL REPORT	View image in PDF format
04/24/2014 – ANNUAL REPORT	View image in PDF format
03/17/2014 – Revocation of Dissolution	View image in PDF format
03/04/2014 – VOLUNTARY DISSOLUTION	View image in PDF format
03/27/2013 – ANNUAL REPORT	View image in PDF format
04/23/2012 – ANNUAL REPORT	View image in PDF format
03/30/2012 – Amendment	View image in PDF format
06/15/2011 – Amendment	View image in PDF format
04/20/2011 – ANNUAL REPORT	View image in PDF format
04/22/2010 – ANNUAL REPORT	View image in PDF format
05/03/2009 – ADDRESS CHANGE	View image in PDF format
02/02/2009 – ANNUAL REPORT	View image in PDF format
04/15/2008 – ANNUAL REPORT	View image in PDF format
04/26/2007 – ANNUAL REPORT	View image in PDF format
02/27/2007 – ANNUAL REPORT	View image in PDF format
01/05/2007 – ANNUAL REPORT	View image in PDF format
04/06/2006 – ANNUAL REPORT	View image in PDF format
04/27/2005 – ANNUAL REPORT	View image in PDF format
04/28/2004 – ANNUAL REPORT	View image in PDF format
04/21/2003 – ANNUAL REPORT	View image in PDF format
03/06/2002 – ANNUAL REPORT	View image in PDF format
12/26/2001 – Domestic Profit	View image in PDF format

PABON ENGINEERING, INC

Contractor Experience

WATER & SEWER MAIN UPGRADES

P16208 – 12-Inch D.I. WM Replacement on Biscayne Blvd. & Federal Hwy.
Bonded: Y, Contract Days: 180, On Time: Y
Miami Dade Water & Sewer – 3071 SW 38 Ave., Miami, FL 33146
Contact: Jose E. Alvarez – 786.236.5325
Engineer: WASD – 3575 S LeJeune Rd, Miami, FL 33146
Contract Amount: $2,204,400.00
Project Status: Pending Completion April 2026
Furnishing all labor, equipment, and materials for construction of water main improvements. Work includes the installation of approximately 2,844 linear feet of 12, 8, 6, and 4-inch zinc-coated ductile iron water main pipe and fittings; furnishing and installing twenty-four (24) resilient-seated gate valves, nine (9) fire hydrant assemblies with guard posts, and associated water services, including fourteen (14) 1-inch services, six (6) 1-inch dual services (meter bank), and two (2) 2-inch services. Work also includes cut-in connections to existing water mains, construction of flushing valve and air release valve assemblies, polyethylene encasement, cleaning, testing, and disinfection of water mains, and cutting, plugging, grouting, and abandoning existing mains. Additional work includes removal and salvage of hydrants, valves, and appurtenances, sheeting and shoring left in place as directed, backfilling, reinforced concrete protective slabs, traffic control, asphalt, sidewalk, curb, gutter, sod, and pavement restoration, and all incidental work necessary for a complete and fully functional installation.

P14950 Furnish and Install 10 Inch C900 PVC FM from PS0469 to PS 0468
Bonded: Y, Contract Days: 180, On Time: Y
Miami Dade Water & Sewer – 3071 SW 38 Ave., Miami, FL 33146
Contact: Miguel Villa – 305.298.5154
Project Status: Pending Completion April 2026
Contract Amount: $1,359,919.22
The project involves furnishing and installing new 10-inch PVC C900 sewage force mains with zinc-coated polyethylene-encased ductile iron fittings along multiple locations, including NE 28th Avenue, NE 164th Street, and an access road east of Biscayne Boulevard. It also includes removing 200 linear feet of existing 6-inch ductile iron pipe over the Oleta River and abandoning in place approximately 3,220 linear feet of 6-inch cast iron force main. Work entails exploratory digging, installation of plug valves, tapping connections to existing force mains, and air release valve assemblies. Additional tasks include asbestos pipe handling, shoring, backfilling, and steel casing installation under existing structures. The project concludes with full site restoration, including pavement, sidewalk, curb, landscaping, and traffic control replacements to ensure a complete and functional system.

2025-001 – Water Main Improvements Winfield Boulevard Canal
Bonded: Y, Contract Days: 60, On Time: Y
City of Margate DEES – 901 NW 66 Ave., Margate, FL 33063
Contact: Paula Fonseca, P.E. – 954.972.0828
Engineer: Chen Moore & Associates
Contract Amount: $ 450,000.00
Project Status: Completed August 2025
Furnishing and Installing approx. 80 LF of 6-inch PVC for water main; 60 LF of 10-inch PVC for water main; 40 LF of 12-inch PVC for water main; 580 LF of 12-inch HDPE water main via HDD; (1) 6-inch gate valves; (4) 10-inch gate valves; (2) air release valves; (3) connections to existing watermains; Tapping sleeve & valve (30"x10"). Asphalt and concrete and trench restoration for all pipe installation and milling & resurfacing of approximately 460 SY with new striping. 330 SY of sod installed.

2024-014 – Water Main Improvements Phase 2B-US-411 Intersection
Bonded: Y, Contract Days: 60, On Time: Y
City of Margate DEES – 901 NW 66 Ave., Margate, FL 33063
Contact: Paula Fonseca, P.E. – 954.972.0828
Engineer: Chen Moore & Associates
Contract Amount: $ 650,000.00
Project Status: Completed April 2025
Furnishing and Installing approx. 150 LF of 6-inch PVC for water main; 40 LF of 8-inch PVC for water main; 600 LF of 10-inch ductile iron pipe for water main; 170 LF of 8-inch HDPE water main via HDD; (7) MJ sleeve adapter couplings; (2) water services; (5) 6-inch gate valves; (8) 10-inch gate valves; (2) air release valves; (3) fire hydrants; (7) connections to existing watermains. Remove and dispose of 120LF of Asbestos Cement Pipe. Asphalt and concrete and trench restoration for all pipe installation and milling & resurfacing of approximately 700 SY with new striping.

T2728 – Ojus New Gravity & FM for Basin D4-A
Bonded: Y, Contract Days: 302, On Time: Y
Miami Dade Water & Sewer – 3071 SW 38 Ave., Miami, FL 33146
Contact: Alexis Valdes – 786.299.9008
Engineer: DTPW – 3575 S Lejeune Rd Miami, FL 33146
Contract Amount: $ 5,298,424.36
Project Status: Completed May 2025
Furnishing and Installing approx. 652 LF of 16-inch DIP for gravity sewer main; 341 LF of 12-inch ductile iron pipe for gravity sewer main; 220 LF of 12-inch PVC C900 for gravity sewer main; 800 LF of 10-inch ductile iron pipe for gravity sewer main; 570 LF of 10-inch PVC C900 for gravity sewer main; 2,300 LF of 8-inch ductile iron pipe for gravity sewer main; 4,920 LF of 8-inch PVC C900 for gravity sewer

main; 980 LF if 6-inch ductile iron pipe for gravity sewer laterals; 1,680 LF of 6-inch PVC C900 for gravity sewer laterals; 49 pre-cast concrete gravity sewer manholes including laterals. Furnish and install 120 LF of 12-inch ductile iron pipe sewage force main; 61 LF of 8-inch ductile iron pipe sewage force main; 120 LF of 24-inch steel casing via Jack & bore; 100 LF of 8-inch ductile iron pipe water main. Concrete and trench restoration for all pipe installation and milling & resurfacing of approximately 40,000 SY with new striping.

2023-012 – Pump Station 3 Force Main Replacement **Bonded: Y Contract Days: 300, On Time: TBD**
City of Coral Gables – 2800 SW 72nd Avenue, Miami, FL 33155 **Contact: Dronix Suarez – 305.460.5024**
Project Status: Completed May 2025 **Contract Amount: $3,349,930.00**
Replace Sanitary Sewer Force Main: DeSoto Boulevard from Coral Way to Sevilla Avenue and Granada Boulevard from Sevilla Avenue. Furnish and Installing 5,835 LF of 20-inch PVC C-900 Force main; 31 LF of 20-inch PVC C-900 temporary bypass force; 8 LF of 12-inch PVC C-900 Force Main; 30 LF of 6-inch PVC C-900 Force Main. Furnish and install two (2) 20-inch plug valve; one (1) 20-inch sacrificial plug valve; two (2) 6-inch plug valve; two (2) 20-inch PVC C900 20" x 6" Tee; one (1) 20 inch PVC C900 20" x 20" Tee; one (1) 20-inch PVC C900 20" x 12" reducer; 14 ARV access manholes. Replacement of 1 existing 21-inch VCP gravity main. Asphalt restoration for all pipe installation and milling & resurfacing of approximately 27,665 SY. Restoring 20,000 SF of sod.

T16076R – 8" WM SW 20th Street & SW 19th Terrace, City of Miami **Bonded: Y Contract Days: 300, On Time: Y**
Miami Dade Water & Sewer – 3071 SW 38 Ave., Miami, FL 33146 **Contact: Christian Espinoza – 786.843.0378**
Project Status: Completed March 2025 **Contract Amount: $1,458,202.71**
Furnishing and installing approx. 2,390 LF of 8-inch zinc-coated ductile iron pipe, 56 LF of 6-inch zinc-coated ductile iron pipe and fittings; 3 fire hydrant assemblies with guard posts; 83 1-inch water services, making 5 tapping connections to existing water mains including tapping sleeves and tapping valves. Constructed 7 ARV assemblies for water mains. Constructing 1,510 SY of concrete driveway & sidewalk restoration. Asphalt restoration for all pipe installation and milling & resurfacing of approximately 6,635 SY.

T2740R – 12" WM Downtown, City of Miami, SE 3rd Street **Bonded: Y, Contract Days: 240, On Time: Y**
Miami Dade Water & Sewer – 3071 SW 38 Ave., Miami, FL 33146 **Contact: Yamirys Battle – 305.215.9243**
Engineer: DTPW, 3071 SW 38 Ave. Miami, FL 33146 **Contract Amount: $2,631,057.00**
Project Status: Completed June 2024
Furnishing and installing approx. 1,120 LF of 12-inch zinc-coated ductile iron pipe and fittings; Four (4) 12-inch resilient-seated gate valves; 80 LF of 8-inch zinc-coated ductile iron pipe; 20 LF of 6-inch zinc-coated ductile iron pipe; 7 fire hydrant assemblies with guard posts; making 3 tapping connections to existing water mains including furnishing and installing tapping sleeves and tapping valves. Making eleven (11) connections to existing water mains. Constructing and assembling 2 ARV for water mains. 490 SF of sheeting & shoring. Constructing 780 SF of concrete driveway & sidewalk restoration. Asphalt restoration for all pipe installation and milling & resurfacing of approximately 795 SY. Construction of 135 pedestrian curb ramps at intersections per FDOT Standard Plans.

Lift Station 14A Force Main Replacement **Bonded: Y, Contract Days: 180, On Time**
City of Coral Springs – 9500 W. Sample Rd. – Coral Springs, FL 33065 **Contact: Najla Zerrouki – 954.345.2188**
Engineer: Eckler Engineering, Inc. **Contract Amount: $675,000.00**
Project Status: Completed January 2023
Furnishing labor, equipment, and materials for construction of replacement sanitary force main.
Work includes the installation of 460 LF of new 6-inch ductile iron pipe force main; 1830 LF of new 8-inch ductile iron pipe force main. Furnish and install two (2) 6-inch, two (2) 8-inch, two (2) 10-inch plug valves and boxes. Constructing and assembling 2 ARV. Grout and abandon 2245 LF of existing force main. Asphalt restoration for all pipe installation and milling & resurfacing of approximately 5,800 SY. Remove and replace 30 SF of concrete sidewalk/driveways. Restoring 2,190 LF of Asphalt pavement patch.

T2662 Furnish and Install 8 Inch C900 PVC FM **Bonded: Y, Contract Days: 300, On Time: Y**
Miami Dade Water & Sewer – 3071 SW 38 Ave., Miami, FL 33146 **Contact: Miguel Pichardo – 786-552-2573**
Project Status: Completed September 2022 **Contract Amount: $ 836,254.89**
Furnishing and installing approx. 3,974 linear feet of 8-inch PVC C900 DR14 pipe and ductile iron fittings for sewage main; six (6) 8-inch plug valves; one cut-in connection to an existing sewage force main; a core drill connection to an existing gravity sewer manhole for connection of the proposed 8-inch PVC sewage force main and including rehabilitation of the manhole. Constructing and assembling 1 manual ARV & 4 Automatic ARV. 400 SF of sheeting & shoring. Asphalt restoration for all pipe installation and milling & resurfacing of approximately 15,045 SY. Remove and replace 3,375 SF of concrete sidewalk/driveways.

P0245EM – City of Aventura 183rd St. & Island Blvd. **Bonded: Y, Contract Days – 315, On Time: Y**
Miami Dade Water & Sewer – 3071 SW 38 Ave., Miami, FL 33146 **Contact: Alexis J Valdes – 786.552.4364**
Williams Island, City of Aventura, FL **Contract Amount – $4,653,141.00**
Project Status: Completed April 2023
Furnish and Install via open-cut method 400 LF of 10-inch PVC C900 pipe for PS 471 connection and placing out of service the existing 8-inch ductile iron pipe; replace 1,350 LF of existing 12-inch ductile iron pipe with 12-inch PVC C900; install 2,475 LF of 16-Inch PVC C900 DR18 PVC to tap into the existing 36-Inch ductile iron pipe FM and connect to the proposed 12-Inch C900 pipe; 10-Inch C900 PVC pipe to replace existing 8-Inch ductile iron pipe connected to PS 499; Furnish and Install via slip-lining method 3,075 LF of 14-Inch nominal size C900 DR11 HDPE pipe to replace existing 18-Inch pipe used as sanitary sewage force main and connecting from the proposed 10-Inch PVC pipe near PS 499. Made tapping connections to existing 36-inch force main used to divert flows North & West rom PS 499. Asphalt restoration for all pipe installation and milling & resurfacing of approximately 10,870 SY. Remove and replace 1,110 SF of concrete sidewalk/driveways.

RPQ T2552 – Eureka FM, SW 180th St & 107th Ave. **Bonded: Y, Contract Days: 180, On Time: Y**
Miami Dade Water & Sewer – 3071 SW 38 Ave., Miami, FL 33146 **Contact: Jose E. Alvarez – 786.236.5325**
Engineer: WASD – 3575 S LeJeune Rd, Miami, FL 33146 **Contract Amount: $400,832.00**
Project Status: Completed April 2020
Furnishing and installing approx. 1,880 LF of 8-inch ductile iron pipe and fittings for a sewage force main; two (2) plug valves: plugging and abandoning existing force main; operating and maintaining a sewer by-pass. Temporary and permanent replacement of 100 SF of sidewalk, 20 LF of curb and gutter, 360 SY of sod, any landscaping and pavement markings. Constructing and assembling 4 ARV. Asphalt restoration for all pipe installation and milling & resurfacing of approximately 5,960 SY.

RPQ T2503 – Homestead FM, SW 288th St. & 157th Ave. **Bonded: Y, Contract Days: 300, On Time: Y**
Miami Dade Water & Sewer – 3071 SW 38 Ave., Miami, FL 33146 **Contact: Marcelino Torres – 305.746.1068**
Engineer: WASD – 3575 S LeJeune Rd, Miami, FL 33146 **Contract Amount: $419,510.00**
Project Status: Completed January 2020
Furnish and install approximately 2,135 LF of 6" DIP force main. Constructing and assembling 11 ARV. Asphalt restoration for all pipe installation and milling & resurfacing of approximately 5,000 SY. 30 LF removal of existing 6" ACP including the required plugs where the ends of the pipe will remain. 200 SF of sheeting & shoring.

RPQ T2381 – Furnish & Install 8" DI Water Main – Perrine **Bonded: Y, Contract Days: 150, On Time: Y**
Miami Dade Water & Sewer – 3071 SW 38 Ave., Miami, FL 33146 **Contact: Alexis Valdes – 786-299-9008**
Engineer: Avino & Associates – 1350 SW 57 Ave, Miami, FL 33144 **Contract Amount: $423,161.00**
Project Status: Completed October 2020
Furnish and install approx. 2,385 LF of 8-inch ductile iron pipe and fittings; 53 LF of 6-inch ductile iron pipe and fittings; making interconnections to existing 2-inch water mains; 6 resilient seated gate valves; 4 fire hydrant assemblies with guard posts; 29 water services; making four tapping connections including installing tapping sleeves and valves; making two connections to existing water mains; furnishing and constructing air release valve assemblies; polyethylene encasement for ductile iron pipe and fittings. Constructing and assembling 2 ARV. 600 SF of sheeting & shoring. Asphalt restoration for all pipe installation and milling & resurfacing of approximately 4,510 SY.

RPQ T2447 – Miami Springs Fire Flow & Water Service Imp. Ph. 2 **Bonded: Y, Contract Days: 365, On Time: Y**
Miami Dade Water & Sewer – 3071 SW 38 Ave., Miami, FL 33146 **Contact: Pearle Khadar – 305.323.3900**
Engineer: Stantec – 901 Ponce de Leon Blvd, Coral Gables, FL 33134 **Contract Amount: $2,632,244.00**
Project Status: Completed March 2020
Complete utility infrastructure upgrades on the potable water system at two separate locations within the Miami-Dade County Water and Sewer service area. Furnishing and installing approx. 8,855 LF of 12-inch zinc-coated ductile iron pipe and fittings; 35 LF of 10-inch zinc-coated ductile iron pipe and fittings; 365 LF of 8-inch zinc-coated ductile iron pipe, fittings and valves; 850 LF of 6-inch zinc-coated ductile iron pipe, fittings, and valves; 370 LF of 4-inch zinc-coated ductile iron pipe, fittings and valves; 225 LF 2-inch high density polyethylene pipe fittings, corporation stops, and ball valves for water main; 31 resilient seated 12-inch gate valves; 3 resilient 10-inch gate valves; 23 fire hydrant assemblies with guard posts; 69 water services; making three tapping connections including installing tapping sleeves and valves; making nineteen connections to existing water mains; furnishing and constructing air release valve assemblies; polyethylene encasement for ductile iron pipe and fittings; approx. Installation of approx. 300 LF of 14" HDPE via Horizontal Directional Drilling. Constructing and assembling 12 ARV. 4,500 SF of sheeting & shoring. Asphalt restoration for all pipe installation and milling & resurfacing of approximately 25,700 SY. Remove and replace 1,000 SF of concrete sidewalk/driveways.

RPQ T2466 – Installation of 16in 12in and 8in DIP Force Mains — **Bonded: Y, Contract Days: 490, On Time: Y**
Miami Dade Water & Sewer – 3071 SW 38 Ave., Miami, FL 33146 — **Contact: Aaron Anderson – 786.338.5393**
Engineer: HDR, Inc. – 2937 SW 27 Ave, Miami, FL 33133 — **Contract Amount: $2,400,068.00**
Project Status: Completed December 2019
Installation of approximately 11,000 LF of 12" and 16" FM. Approximately 25,000 SY of 1" milling and resurfacing. Installation of approximately 250 LF 12" HDPE via Horizontal Directional Drilling.

RPQ T2358 – Miami Gardens, NW 207th Street — **Bonded: Y, Contract Days: 180, On Time: Y**
Miami Dade Water & Sewer – 3071 SW 38 Ave., Miami, FL 33146 — **Contact: Marcelino Torres – 305.746.1068**
Engineer: CPH, Inc. – 1992 SW 1 Street, Miami, FL 33135 — **Contract Amount: $457,101.00**
Project Status: Completed April 2019
Installation of approximately 1,420 LF of 12" DIP FM and 440 LF of 6" - 8" DIP FM. Approximately 2,425 SY of 1" milling and resurfacing.

RPQ T2431 – Killian, SW 88th Ave and 107th St. — **Bonded: Y, Contract Days: 90, On Time: Y**
Miami Dade Water & Sewer – 3071 SW 38 Ave., Miami, FL 33146 — **Contact: Jose E. Alvarez – 786.236.5325**
Engineer: WASD – 3575 S LeJeune Rd, Miami, FL 33146 — **Contract Amount: $488,657.00**
Project Status: Completed October 2018
Installation of approximately 3,000 LF of 12" and 8" WM with 25 new services and six new fire hydrants. Approximately 1,300 SY of 1" milling and resurfacing.

RPQ T2376 – Richmond Heights — **Bonded: Y, Contract Days: 120, On Time: Y**
Miami Dade Water & Sewer – 3071 SW 38 Ave., Miami, FL 33146 — **Contact: Marcel Osorio – 305.812.6082**
Engineer: WASD – 3575 S LeJeune Rd, Miami, FL 33146 — **Contract Amount: $432,441.00**
Project Status: Completed August 2018
Installation of approximately 2,450 LF of 10" FM. Approximately 4,000 SY of 1" milling and resurfacing.

RPQ T2327 – Florida City — **Bonded: Y, Contract Days: 230, On Time: Y**
Miami Dade Water & Sewer – 3071 SW 38 Ave, Miami, FL 33416 — **Contact: Marcelino Torres – 305.746.1068**
Engineer: HDR, Inc. – 2937 SW 27 Ave, Miami, FL 33133 — **Contract Amount: $689,119.00**
Project Status: Completed August 2018
Installation of 360 LF of 8" FM, 1360 LF of 10" FM and 680' of 12" FM. Approximately 2000 LF of milling and overlay including work done on FDOT right-of-way.

RPQ T2367 – SW 112th Street — **Bonded: Y, Contract Days: 180, On Time: Y**
Miami Dade Water & Sewer – 3071 SW 38 Ave., Miami, FL 33146 — **Contact: Alexis Valdes – 786.299.9008**
Engineer: WASD – 3575 S LeJeune Rd, Miami, FL 33146 — **Contract Amount: $821,422.00**
Project Status: Completed June 2018
Installation of 5060 LF of 8" WM with (9) fire hydrants, (12) connections to existing water mains and (74) 1" water services with boxes. 1" Milling and resurfacing of approximately 16,580 SY.

Entertainment District Park – Doral NW 82nd Avenue — **Prime: Downrite Engineering Corp.**
Burke Construction Group — **Contact: Joey LaBue – 305.345.4002**
Project Status: Completed January 2018 — **Contract Amount: $53,569.00**
Installation of approximately 300 LF of 4", 6", 8" DIP FM with a 4" and 6" check valve and (2) 8" plug valves at the intersection of NW 25th Street and NW 82nd Avenue. Installation of 24x8 tapping sleeve and valve.

RPQ T2288 – Miami Gardens, NW 159th Street — **Bonded: Y, Contract Days: 180, On Time: Y**
Miami Dade Water & Sewer – 3071 SW 38 Ave., Miami, FL 33146 — **Contact: Marcelino Torrez – 305.746.1068**
Engineer: HDR, Inc. – 2937 SW 27 Ave, Miami, FL 33133 — **Contract Amount: $315,331.00**
Project Status: Completed January 2018
Installation of approximately 1400 LF of 16" DIP FM connecting to a 30" and a 12" FM. Installation of (2) ARVs and (1) 12" plug valve. Complete 1" milling and resurfacing of approximately 1500 SY.

Miami Dade Water and Sewer – 3071 SW 38 Ave., Miami, FL 33416 — **Contact: Nelson Cespedes – 305.607.0799**
Project Status: Completed 2007 — **Contract Amount: $630,000.00**
Installation of new water main.

Village of Key Biscayne
Key Biscayne, FL
Project Status: Completed 2006
Upgrade of water and sewer mains.

Prime: Metro Equipment Service, Inc.
Contact: Jorge Godoy – 305.740.3303
Contract Amount: $1,100,000.00

City of Miramar Water Main Upgrades
Miramar, FL
Project Status: Completed 2005
Installation of 33,000 LF of water main with services. Complete asphalt, concrete and sod restoration.

Prime: Metro Equipment Service, Inc.
Contact: Whittingham Gordon – 954.605.9414
Contract Amount: $2,500,000.00

S-769 – WASD Dig & Replace
Miami Dade Water and Sewer – 3071 SW 38 Ave., Miami, FL 33416
Project Status: Completed 2004
Two-year county wide dig and replace term contract.

Prime: Metro Equipment Service, Inc.
Contact: Jorge Godoy – 305.740.3303
Contract Amount: $910,000.00

Key Colony Sewer Upgrades
Florida Keys Aqueduct Authority – 1100 Kennedy Dr., Key West, FL 33040
Project Status: Completed 2004
Installation of new vacuum sewer system.

Prime: ADB Utility
Contact: Jason Lynd – 314.280.6003
Contract Amount: $1,700,000.00

DRAINAGE UPGRADES

20250008 – Drainage Improvements Multiple Sites
Miami Dade Public Works
Engineer: DTPW – 111 NW 1 Street, Miami, FL 33128
Project Status: Pending Completion May 2026
Construction and installation of drainage structures 630 LF of 18-inch french drain pipe; 110 LF of 15-inch pipe culvert; 33 LF of 18-inch pipe culvert; 5 manholes. Asphalt restoration for all pipe installation and milling & resurfacing of approximately 635 SY. Remove and replace 105 SY of concrete sidewalk/driveways.

Bonded: Y, Contract Days: 270, On Time: Y
Contact: Juan Gonzalez – 305.608.9702
Contract Amount: $379,377.72
Prime: Pabon Engineering, Inc.

2025-02-01 – Drainage Improvements Along NE 8th Avenue
Miami Shores Village
Engineer: A.M.I. Engineering, LLC. 12850 N Calusa Club Dr., Miami, FL 33186
Project Status: Completed November 2025
Address flooding concerns within the project limits resulting from insufficient drainage infrastructure. The work includes constructing and installing drainage improvements consisting of approximately 380 LF of 24-inch French drainpipe, 100 LF of 18-inch pipe culvert, and 4 manholes. The project also includes asphalt restoration associated with pipe installation, milling and resurfacing of about 3,000 SY, replacement of 1,744 SY of concrete sidewalks and driveways, and restoration of approximately 1,560 SY of sod.

Bonded: Y, Contract Days: 60, On Time: Y
Contact: Jorge Loor – 305.795.2210
Contract Amount: $625,000.00
Prime: Pabon Engineering, Inc.

20240165 – Drainage Improvements Multiple Sites
Miami Dade Public Works
Engineer: DTPW – 111 NW 1 Street, Miami, FL 33128
Project Status: Completed October 2025
Mitigate flooding issues within the project area caused by inadequate drainage infrastructure. The work includes constructing and installing drainage improvements consisting of approximately 2,025 LF of 24-inch French drainpipe, 60 LF of 15-inch pipe culvert, 260 LF of 18-inch pipe culvert, 65 LF of 24-inch pipe culvert, 920 LF of desilt pipe, and 12 manholes. The project also includes asphalt restoration associated with pipe installation, milling and resurfacing of about 1,843 SY, replacement of 500 SY of concrete sidewalks and driveways, and restoration of approximately 140 SY of sod.

Bonded: Y, Contract Days: 270, On Time: Y
Contact: Juan Gonzalez – 305.608.9702
Contract Amount: $950,000.00
Prime: Pabon Engineering, Inc.

2025-002 – NW 27th Street Drainage Improvements
City of Margate – 102 Rock Island Road Margate, FL 33063
Engineer: Chen Moore & Associates
Project Status: Completed July 2025

Bonded: Y, Contract Days: 90, On Time: Y
Contact: Jessica Diaz – 954.730.0707
Contract Amount: $450,000.00
Prime: Pabon Engineering, Inc.

The construction and installation of drainage structures 660 LF of 18-inch French drainpipe; 70 LF of 15-inch pipe culvert; (7) 48-inch catch basins. Asphalt restoration for all pipe installation and milling & resurfacing of approximately 100 SY. Remove and replace 230 SY of concrete sidewalk/driveways. Restoring 750 SY of sod.

23-B-11-116F – Meadows & Dells Drainage Improvements, Phase B & C **Bonded: Y, Contract Days: 302, On Time: Y**
City of Coral Springs – 9500 W. Sample Rd – Coral Springs, FL 33065 **Contact: Najla Zerrouki – 954.345.2188**
Engineer: Botek Thurlow Engineering, Inc. **Contract Amount: $1,629,989.00**
Project Status: Completed March 2024 **Prime: Pabon Engineering, Inc.**
Road Restoration 4,600 SY – Remove existing asphalt & Limerock (4") and re-grade & resurface with new 1-1/2" Type SP 9.5 asphalt (2 lifts); mill & resurface 22,680 SY (1") asphalt, remove & replace 3,744 SY of asphalt driveway; 18,655 LF of valley gutter, 2 Type "C" catch basin; 119 LF storm drainage pipe (15"); 31 concrete catch basin apron, 13 concrete flume, connect to existing catch basin, 11,258 SY swale soil material removal, regrading and sodding.

20230156 – Drainage Improvements Multiple Sites **Bonded: Y Contract Days: 300, On Time: Y**
Miami Dade Public Works **Contact: Licet Izquierdo – 305.375.2648**
Engineer: DTPW – 111 NW 1 Street Miami FL 33128 **Contract Amount: $ 888,585.00**
Project Status: Completed January 2025 **Prime: Pabon Engineering, Inc.**
Construction and installation of drainage structures 985 LF of 18-inch french drain pipe; 545 LF of 24-inch perforated French drain pipe; 633 LF of 15-inch pipe culvert; 185 LF of 16-inch pipe culvert; 50 LF of 24-inch pipe culvert; 700 LF of desilt pipe; 19 manholes. Asphalt restoration for all pipe installation and milling & resurfacing of approximately 3,530 SY. Remove and replace 1,500 SF of concrete sidewalk/driveways.

20220181 – Drainage Improvements Multiple Sites **Bonded: Y, Contract Days: 240, On Time: Y**
Miami Dade Public Works **Contact: Licet Izquierdo – 305.375.2648**
Engineer: DTPW – 111 NW 1 Street Miami FL 33128 **Contract Amount: $695,000**
Project Status: Completed April 2024 **Prime: Pabon Engineering, Inc.**
The construction and installation of drainage structures 1,070 LF of 18-inch French drain pipe; 568 LF of 15-inch pipe culvert; 1,380 LF of 18-inch pipe culvert; 350 LF of desilt pipe; 17 manholes. Asphalt restoration for all pipe installation and milling & resurfacing of approximately 4,330 SY. Remove and replace 610 SY of concrete sidewalk/driveways.

20220031 – Drainage Improvements Multiple Sites **Bonded: Y, Contract Days: 210, On Time: Y**
Miami Dade Public Works **Contact: Felipe Monteagudo – 305.375.2111**
Engineer: DTPW – 111 NW 1 Street, Miami, FL 33128 **Contract Amount: $535,491.00**
Project Status: Completed February 2023 **Prime: Pabon Engineering, Inc.**
The construction and installation of drainage structures 1,385 LF of 18-inch French drain pipe; 308 LF of 15-inch pipe culvert; 400 LF of 18-inch pipe culvert; 250 LF of desilt pipe; 17 manholes. Asphalt restoration for all pipe installation and milling & resurfacing of approximately 5,620 SY. Remove and replace 110 SY of concrete sidewalk/driveways. Restoring 1,435 SY of sod.

20200233 – Drainage Improvements Multiple Sites **Bonded: Y, Contract Days: 317, On Time: Y**
Miami Dade Public Works **Contact: Juan Gonzalez – 305.608.9702**
Engineer: DTPW – 111 NW 1 Street, Miami, FL 33128 **Contract Amount: $877,090.00**
Project Status: Completed April 2022 **Prime: Pabon Engineering, Inc.**
Alleviate flooding problems within the project boundaries that have an ineffective drainage infrastructure The construction and installation of drainage structures 2,915 LF of 18-inch French drain pipe; 820 LF of 15-inch pipe culvert; 420 LF of 18-inch pipe culvert; 140 LF of desilt pipe; 27 manholes. Asphalt restoration for all pipe installation and milling & resurfacing of approximately 6,350 SY. Remove and replace 635 SY of concrete sidewalk/driveways. Restoring 3,000 SY of sod.

20200160 – Drainage Improvements Multiple Sites **Bonded: Y, Contract Days: 270, On Time: Y**
Miami Dade Public Works **Contact: Osvaldo Montero – 786.473.0125**
Engineer: DTPW – 111 NW 1 Street, Miami, FL 33128 **Contract Amount: $535,737.00**
Project Status: Completed January 2022 **Prime: Pabon Engineering, Inc.**
The construction and installation of drainage structures 1,385 LF of 18-inch French drain pipe; 695 LF of 15-inch pipe culvert; 160 LF of 18-inch pipe culvert; 12 manholes. Asphalt restoration for all pipe installation and milling & resurfacing of approximately 2,195 SY. Remove and replace 330 SY of concrete sidewalk/driveways. Restoring 8,535 SY of sod.

20190096 – Drainage Improvements Multiple Sites
Miami Dade Public Works – 111 NW 1 Street, Miami, FL 33128
Engineer: DTPW – 111 NW 1 Street, Miami, FL 33128
Project Status: Completed October 2020
Bonded: Y, Contract Days: 365, On Time: Y
Contact: Juan Gonzalez – 305.608.9702
Contract Amount: $824,870.00
Prime: Pabon Engineering, Inc.
The construction and installation of drainage structures 3,205 LF of 18-inch French drain pipe; 1,500 LF of 15-inch pipe culvert; 510 LF of 18-inch pipe culvert; 13 desilting drainage structures; 14 manholes. Asphalt restoration for all pipe installation and milling & resurfacing of approximately 4,605 SY. Remove and replace 920 SY of concrete sidewalk/driveways. Restoring 4,650 SY of sod.

RPQ T2603 – South Miami Heights Water Treatment Plant
Miami Dade Water & Sewer
Engineer: WASD – 3575 S LeJeune Rd, Miami, FL 33146
Project Status: Completed August 2021
Bonded: Y, Contract Days: 270, On Time: Y
Contact: Paul Castell – 786.552.4413
Contract Amount: $1,211,148.00
Prime: Pabon Engineering, Inc.
Replacement of existing parking lot and adding a storm water management system. Construction and installation of the new drainage system including 18 catch basins, 300 LF of 24-inch HDPE solid pipe, 450 LF of 18-inch RCP, and 200 LF of exfiltration trenches

20170317 – Drainage Improvements Multiple Sites
Miami Dade Public Works – 111 NW 1 Street, Miami, FL 33128
Engineer: DTPW – 111 NW 1 Street, Miami, FL 33128
Project Status: Completed December 2018
Bonded: Y, Contract Days: 180, On Time: Y
Contact: Alfonso E. Duarte Jr. – 305.375.2392
Contract Amount: $540,511.00
Prime: Pabon Engineering, Inc.
Installation of approximately 670 SY of parking swale blocks. Installation of 27 new drainage structures and 1755 LF of drainage. 100 SY of concrete sidewalks and 260 LF of concrete curbs. Approximately 1,780 SY of 1" milling and resurfacing.

20170100 – Drainage Improvements Medley
Miami Dade Public Works
Project Status: Completed November 2017
Prime: American Builders Master Corp.
Contact: Javier Borges – 305.375.4317
Contract Amount: $73,657.00
Installation of approximately 220 LF of 18" French drain and installation of 200 LF of 15"-18" drainage pipe with 4 drainage boxes. Asphalt and sod restoration in disturbed areas.

T4462 (A1A & Hollywood Blvd.)
Florida Department of Transportation
Project Status: Completed November 2019
Prime: UAG Construction
Contact: Andy Diaz – 305.504.9937
Contract Amount: $166,112.00
Installation of approximately 290 LF of 18" French drain and installation of 240 LF of 15"-18" drainage pipe with 3 drainage boxes. Asphalt and sod restoration in disturbed areas.

T4449 (Hollywood Blvd.)
Florida Department of Transportation
Project Status: Completed June 2019
Prime: Acosta Tractors
Contact: Ernie Diaz – 305.804.8731
Contract Amount: $384,590.00
Installation of approximately 3250 LF of 6"-12" PVC WM. Installation of approximately 470 LF of 6" DIP WM with (5) fire hydrants. Installation of over 1430 LF of 24" French drain with (26) large structures and (23) catch basins.

PUMP STATION UPGRADES

General Contracting Services-Various Utilities & Streets Projects
City of Coral Springs – 9500 W. Sample Rd. – Coral Springs, FL 33065
Project Status: Ongoing
Bonded: Y
Contact: Miguel Machuca – 954.344.1101
Upgrade of Pump Station 14-C at 4100 NW 79 Ave. Emergency Force Main Valve Replacement for LS 20-B. Upgrade Pump Station 18B at 4375 NW 120 Ave. Lift Station 19A car accident damage at 12190 NW 33 St.

RPQ T2605 – Upgrade of Sewage Pump Station No. 1201
Miami Dade Water & Sewer
Engineer: WASD – 3575 S LeJeune Rd, Miami, FL 33146
Project Status: Completed August 2021
Bonded: Y, Contract Days: 180, On Time: Y
Contact: Kevin Keane – 786.446.7450
Contract Amount: $1,126,445.00
Refurbished existing dry well for new dry mounted submersible pump application with new 8-inch internal discharge piping, valves, and fittings. Refurbished existing wet well install new 8-inch internal suction piping. New top slab and access hatches for wet well and dry well. Demolished existing on-site building. Demolished existing Driveway. Demolished existing Fence Installed two (2) new dry mounted

submersible FLYGT, NT 3202.095 HT 3 ~ 467 diameter impeller (340 mm), 60 HP motors running at 1,775 rpm, or equal in the existing dry well. New odor control system (ie. VAPEX). New vent system on wet well. Installed new discharge piping with required fittings and valves. Installed new emergency pump out station. New electrical equipment, concrete slab and wiring. New pump motor connection box and necessary conduits and wiring. New pump discharge connection to existing 8-inch force main. Installation of new RTU to be coordinated with MDWASD. New generator and fuel tank on concrete slab. New Back-flow Preventer and Hose Bibb.

RPQ T2455 – Upgrade of Sewage Pump Station No. 1026
Miami Dade Water & Sewer
Engineer: WASD – 3575 S LeJeune Rd, Miami, FL 33146
Project Status: Completed August 2019
Bonded: Y, Contract Days: 180, On Time: Y
Contact: Nikolai Gage – 305.446.7450
Contract Amount: $828,360.00

The project involved providing all labor, materials, equipment, and services required to upgrade Sewage Pump Station No. 1026. It included maintaining uninterrupted by-pass pumping, site preparation, dewatering, and implementing a Maintenance of Traffic plan. The existing pump station, force mains, and related components were demolished, and all debris was legally disposed of, with salvageable items returned to the Department. A 6-inch asbestos cement water main was removed, and an existing 6-inch water main was relocated using ductile iron pipe (DIP). New installations included an 8-inch DIP force main, 12-inch PVC gravity sewer, concrete wet well, valve vault, dual 30 HP submersible pumps, air release valve, sump pump, and a complete water service line. Control panels, SCADA systems, and other electrical components were furnished and installed. Coordination with MD-WASD and the Homestead Electrical Authority was completed for pipe connections and electrical service. Site restoration, including sidewalks, asphalt, sod, and fencing, was performed. Startup, testing, and final acceptance of the new pump station were also completed.

RPQ T2448 –Upgrade of Sewage Pump Station No. 0827
Miami Dade Water & Sewer – 3071 SW 38 Ave., Miami, FL 33146
Engineer: HDR, Inc. – 2937 SW 27 Ave, Miami, FL 33133
Project Status: Completed October 2019
Bonded: Y, Contract Days: 300, On Time: Y
Contact: Gil Garcia (CD) – 786.390.7101
Contract Amount: $457,000.00

The project involved furnishing all materials, labor, and equipment necessary to upgrade Sewage Pump Station No. 0827. Uninterrupted by-pass pumping was provided throughout construction until the new station was approved by the Engineer and the Department, including as-built drawing approval, successful startup, and a 7-day operational test. A section of the existing force main was removed, and the existing pump station was demolished, including the wet well top slab, electrical equipment slab, and valve vault, while preserving the wet well. The wet well was refurbished, and all pumps, piping, valves, and associated components were removed. A new wet well top slab, cover, and hatch were installed. Site preparation and clearing were completed, and a new force main was installed along with dual 12 HP submersible pumps and all necessary discharge and emergency piping. Electrical work included installing a new control panel, electrical service, RTU enclosure, SCADA antenna, and related conduits and slabs. The project also included installing 15 linear feet of 4" DIP force main and a 1" water service pipe with a new backflow preventer and hose bibb. Coordination with the Department ensured proper salvaging of SCADA and RTU components before removal. Final steps included site restoration, pump station testing, and ensuring a complete and functional installation.

RPQ T2325 – Upgrade of Sewage Pump Station No. 0124 - Doral
Miami Dade Water & Sewer – 3071 SW 38 Ave, Miami, FL 33416
Engineer: Stantec – 901 Ponce de Leon Blvd, Coral Gables, FL 33134
Project Status: Completed August 2018
Bonded: Y, Contract Days: 150, On Time: Y
Contact: Kevin Keane (PSIP) – 786.236.3503
Contract Amount: $1,228,550.00

The project involved furnishing all materials, labor, and equipment needed to upgrade Sewage Pump Station No. 0124. Continuous bypass pumping was provided for both the existing pump station and the 8-inch force main throughout construction until the new system was fully operational and accepted. Portions of the existing station, including the dry well, parts of the wet well, mechanical and electrical components, and related structures, were demolished. Site preparation, clearing, and protection of existing facilities to remain were completed. Modifications were made to the wet well, and new submersible pumps, a valve pit, and emergency pump-out connections were installed. A new 8-inch discharge force main, plug valves, air release valve, sanitary sewer manhole, and 12-inch gravity sewer were furnished and installed. Electrical upgrades included a new control panel, SCADA RTU, antenna, and all related service equipment and structures, with coordination from FPL for electrical connections. Site restoration included new sidewalks, asphalt pavement, markings, a chain link fence, and driveway improvements. Salvageable pipes, valves, and structures were protected and re-used as required, with replacements provided at no cost if damaged. The Department handled the reinstallation and wiring terminations for the RTU components after the contractor installed the necessary conduit and wiring.

MISCELLANEOUS CIVIL PROJECTS

General Contracting Services-Various Utilities & Streets Projects — **Bonded: Y**
City of Coral Springs – 9500 W. Sample Rd. – Coral Springs, FL 33065 — **Contact: Miguel Machuca – 954.344.1101**
Project Status: Ongoing
4477 NW 88th Ter, 4915 NW 85th Road saw cutting & removal of existing valley gutter. Manhole Repair Sample Rd D.O.T. project @ 8605. Upgrade of Pump Station 14-C at 4100 NW 79 Ave. Emergency Force Main Valve Replacement for LS 20-B. Upgrade Pump Station 18B at 4375 NW 120 Ave. Lift Station 19A car accident damage at 12190 NW 33 St

EC234194 – Emergency Haulover – ADA Parking Lot — **Bonded: N, Contract Days – 365, On Time: Y**
Miami Dade Parks, Recreation and Open Spaces Department — **Contact: David Leyva – 305.596.4460**
10800 Collins Avenue – Miami Beach, FL — **Contract Amount – 188,163.00**
Project Status: Completion July 2021
Remove existing curbing/retaining wall to connect to service road, Re-grade/slope asphalt to match and transition for new entrance, Mill and overlay existing asphalt in ADA Parking lot and service road approximately 1,200 SY, all new striping including 8 new handicap stalls, install 6 removable bollards, install new type D curbs.

C233133 Haulover Skate Park and Pump Track Sodding — **Bonded: N, Contract Days –XXX On Time: Y**
Miami Dade Parks, Recreation and Open Spaces Department — **Contact: David Leyva – 305.596.4460**
10800 Collins Avenue – Miami Beach, FL — **Contract Amount – 149,625.00**
Project Status: Completed March 2021
Install new proposed curbing approx. 12" above existing grade. Create new 4" concrete entrances 5'-7'. Furnish and install 8 new DuMor 88 Series PL benches.

T2638 – One Year WASD Pavement Restoration Project B 2020 Year — **Bonded: Y, Contract Days-365, On Time: Y**
Miami Dade Water & Sewer– 3071 SW 38 Ave, Miami, FL 33416 — **Contact: Mayra Espinosa – 786.268.5044**
Project Status: Completed August 2021 — **Contract Amount: $1,534,095.00**
Asphaltic patching repairs: performing asphaltic concrete repairs including milling and resurfacing; saw cutting; removal of existing asphalt; disposal of debris; reworking base; compaction; leveling to match existing pavement; marking restoration of permanent thermoplastic pavement striping; restoration of reflective pavement markers; maintenance of traffic; traffic control; adjusting manhole and valve boxes.

C2020WWEP – West Perrine Park – Asphalt and Concrete Repair — **Bonded: N, Contract Days-14, On Time: Y**
Miami Dade Parks, Recreation and Open Spaces Department — **Contact: David Leyva – 305.596.4460**
Project Status: Completed October 2020 — **Contract Amount: $62,093.00**
Complete renovations and repairs of approximately 5,800 SF of asphalt parking lot and 4500 SF of concrete walkways throughout the entire park. Root pruning and root barrier as a repair/remediation measure.

C2020CGGRY – Greynolds Park Golf Course — **Bonded: N, Contract Days-14, On Time: Y**
Miami Dade Parks, Recreation and Open Spaces Department — **Contact: David Leyva – 305.596.4460**
Project Status: Completed September 2020 — **Contract Amount: $166,412.00**
Construction/installation of approximately 10,100 LF x 8'0" wide x 3" thick recycled concrete aggregate golf cart paths. Cut out, excavate and remove from the property approximately 1,138 lineal feet x 8'0" wide x 3" thick turf/sod. Approximately 8,947 lineal feet x 6'0" wide existing asphalt/blacktop.

20180268 – ADA Sidewalk Improvements – Multiple Sites — **Bonded: Y, Contract Days: 450, On Time: Y**
Miami Dade Public Works – 111 NW 1 Street, Miami, FL 33128 — **Contact: George Coppolecchia – 305.608.9702**
Engineer: DTPW – 111 NW 1 Street, Miami, FL 33128 — **Contract Amount: $453,200.00**
Project Status: Completed September 2020
Removal and installation of approx. 53,000 SF of concrete sidewalk; Removal and installation of approx. 2,000 LF of concrete curb and gutter.

Zoo Miami – Asian Elephant Moat Excavation
Miami Dade Parks & Open Spaces — **Contact: Enrique Gaston – 786.719.5476**
Project Status: Completed February 2018 — **Contract Amount: $34,400.00**
Excavating, grading and compacting new moat for Asian Elephant exhibit at Zoo Miami to expand area.

Hurricane Irma Disaster Relief
City of Miami
Project Status: Completed November 2017
Prime: RPF Emergency Services, LLC.
Contact: Jean Lisenba – 251.406.0936
Contract Amount: $304,679.00
Remove haul and dispose debris throughout the City of Miami caused by Hurricane Irma.

Eastern Shores HDD / Hurricane Irma Tree Clearing
Miami Dade Parks & Open Spaces
Project Status: Completed September 2017
Contact: Alvaro Castro – 305.375.2796
Contract Amount: $20,950.00
Installation of 2" piping via HDD method at the Eastern Shores Clubhouse. Cutting and removing displaced trees along the roadways in Homestead, FL due to Hurricane Irma.

Stor-All Public Storage
3460 SW 8th Street - Miami, FL
Project Status: Completed June 2017
Prime: Wolverine Engineering
Contact: Everett Bieber – 954.931.9653
Contract Amount: $120,067.25
Installation of 8" tap to run new 8" DIP water main to building with water meter boxes. Cut existing 10" clay pipe to connect new sewer lateral to building and installation of new terminal sewer manhole. Installation of solid drainage pipe to newly installed catch basins with new frames and grates. Removal and replacement of approximately 400 LF of type F curb and 6,300 SF of concrete sidewalks and decorative colonnade.

Tamiami Shopping Center – Dacar Management
12000 SW 8th Street – Miami, FL
Project Status: Completed June 2016
Prime: Candas Construction
Contact: Rafael Gutierrez – 305.799.3030
Contract Amount: $132,675.00
Installation of approximately 150 LF of 6" PVC Sewer and approximately 120 LF of rainwater leader tying into an existing catch basin. Furnish and installation of a new catch basin box with new ½ HP sump pump and 2" discharge piping. New type D curbing along with asphalt repairs and new striping configuration. New landscaping upgrades including sod and mulch restoration, installation of (6) large trees and over (250) small trees and shrubs.

Gulliver Academy – New Olympic Pool Facility, Miami, FL
12000 SW 8th Street – Miami, FL
Project Status: Completed 2009
Contact: Jamie Prosper – 786.281.0111
Contract Amount: $1,000,000
Installation of sewer system, drainage system, Excavation for Olympic size pool. Build playing field.

Project Experience while at V Engineering and Consulting, Corp.

T2186 –Miami Dade Water & Sewer – 3071 SW 38 Ave., Miami, FL 33416
Project Status: Completed 2016
Contact: Carlos Lopez – 786.746.1068
Contract Amount: $810,000.00
Replacement of 8" ACP force main.

T2127 – Miami Dade Water & Sewer – 3071 SW 38 Ave., Miami, FL 33416
Project Status: Completed 2016
Contact: Carlos Baro – 786.268.5179
Contract Amount: $979,999.00
Replacement of 3800 LF of 12" water main.

T2123 – Miami Dade Water & Sewer – 3071 SW 38 Ave., Miami, FL 33416
Project Status: Completed 2016
Contact: Alexis Valdes – 786.299.9008
Contract Amount: $860,000.00
Installation of 24" ductile iron force main.

T2090 – Miami Dade Water & Sewer – 3071 SW 38 Ave., Miami, FL 33416
Project Status: Completed 2016
Contact: Raul Caballero – 786.268.2166
Contract Amount: $1,190,500.00
Installation of 6" ductile iron force main from PS 746 to SW 156th Street.

T2050 – Miami Dade Water & Sewer – 3071 SW 38 Ave., Miami, FL 33416
Project Status: Completed 2016
Contact: Warren Howard – 954.300.6479
Contract Amount: $1,510,956.00
One-year county wide dig and replace term contract.

T2209 – Miami Dade Water & Sewer – 3071 SW 38 Ave., Miami, FL 33416 **Contact: Alexis Valdes – 786.299.9008**
Project Status: Completed 2017 **Contract Amount: $4,750,000.00**
Installation of approximately 1300 LF of 36" WM and approximately 1600 LF 48" DIP WM in the vicinity of All Aboard Florida Passenger Station, including a micro-tunnel under the train tracks with approximately 280 LF of 72" casing pipe.

T2000 – Miami Dade Water & Sewer – 3071 SW 38 Ave., Miami, FL 33416 **Contact: Alexis Valdes – 786.299.9008**
Project Status: Completed 2016 **Contract Amount: $900,499.00**
Installation of 5600 LF of 8" water main.

T1982 – Miami Dade Water & Sewer – 3071 SW 38 Ave., Miami, FL 33416 **Contact: Alexis Valdes – 786.299.9008**
Project Status: Completed 2016 **Contract Amount: $810,999.00**
Installation of 8" ductile iron water main.

Stormwater Improvements Phase I
City of Coral Gables – 405 Biltmore Way., Coral Gables, FL 33134 **Contact: Alex Regalado – 786.234.2471**
Project Status: Completed 2016 **Contract Amount: $809,555.00**
Upgrades to storm water system in Cocoplum.

T1934 – Miami Dade Water & Sewer – 3071 SW 38 Ave., Miami, FL 33416 **Contact: Alexis Valdes – 786.299.9008**
Project Status: Completed 2015 **Contract Amount: $1,519,997.00**
Installation of approximately 2,100 LF 16" ductile iron force main.

T1913 – Miami Dade Water & Sewer – 3071 SW 38 Ave., Miami, FL 33416 **Contact: Frank Cortazar – 305.978.0824**
Project Status: Completed 2015 **Contract Amount: $3,233,455.00**
One-year county wide dig and replace term contract.

T1912 – Miami Dade Water & Sewer – 3071 SW 38 Ave., Miami, FL 33416 **Contact: Alexis Valdes – 786.299.9008**
Project Status: Completed 2015 **Contract Amount: $1,519,997.00**
Replacement of 6", 8" and 12" ACP force main.

T1883 – Miami Dade Water & Sewer – 3071 SW 38 Ave., Miami, FL 33416 **Contact: Jorge Olivero – 786.282.5020**
Project Status: Completed 2015 **Contract Amount: $1,800,000.00**
Replacement of piping 24" – 48" at Virginia Key Water Treatment Plant.

IKEA Sewer Repair
Miami Dade Water & Sewer – 3071 SW 38 Ave., Miami, FL 33416 **Contact: Jorge Olivero – 786.282.5020**
Project Status: Completed 2014 **Contract Amount: $215,000.00**
Emergency deep 8" DIP gravity sewer repair for IKEA

Project Experience while at Metro Equipment Service, Inc.

SR 674 Force Main S County Water Treatment Plant
Hillsborough County – 601 E. Kennedy Blvd., Tampa, FL 33602 **Contact: Mark Dillman – 813.334.3187**
Project Status: Completed 2014 **Contract Amount: $6,183,138.00**
Installation of 10,200 LF of 36" DIP Force Main, 2,200 LF of 6" Fusible PVC via HDD, 420 LF 48" Steel casing Micro Tunnel under I-75 and 260 LF 48" Steel casing Micro Tunnel under SR 674. The project also included approximately 17,000 SY of Roadway reconstruction.

Duck Key Utility Improvement Phase 7
Florida Keys Aqueduct Authority – 1100 Kennedy Dr., Key West, FL 33040 **Contact: Joe Ivey – 305.745.3991**
Project Status: Completed 2014 **Contract Amount: $2,726,000.00**
Installation of 3,310 of 8" Gravity Sewer with 11 Manholes, and 40 Sewer Laterals. One Duplex Lift Station, 6,680 LF of 2" through 4" PVC Force Main, 2760' LF of 4" through 8" Water Main with 5 Fire Hydrants, and 33 Water Services. Installation of 29 Simplex Grinder Low Pressure Stations, 1 Duplex Grinder Sewer station, and 29 LPM Lateral Kit Assemblies

Duck Key Utility Improvement Phase 4, 5, 6
Florida Keys Aqueduct Authority – 1100 Kennedy Dr., Key West, FL 33040 **Contact: Joe Ivey – 305.745.3991**
Project Status: Completed 2013 **Contract Amount: $4,961,000.00**
Installation of 11,300 LF of 8" gravity sewer with 53 manholes and 151 sewer laterals. Two duplex lift stations, one triplex lift station, 4,800 LF of 2" – 4" PVC force main, 9,650 LF of 4" and 6" reclaimed water main with 135 services, 12,500 LF of 4" – 8" water main with 14 fire hydrants and 118 water services. One aerial bridge crossing with three different utilities installed with stainless steel pipe.

Big Pine Key Water Main Upgrades
Florida Keys Aqueduct Authority – 1100 Kennedy Dr., Key West, FL 33040 **Contact: Joe Ivey – 305.745.3991**
Project Status: Completed 2013 **Contract Amount: $2,634,600.00**
Installation of 31,420 LF of 4" – 8" PVC water main. Two aerial bridge crossings and 712 new water services.

City of Hollywood, Water Main Upgrade
City of Hollywood – 2600 Hollywood Blvd. Hollywood, FL 33020 **Contact: Clece Aurelus – 954.921.3995**
Project Status: Completed 2012 **Contract Amount: $916,689.50**
Installation of 3000 LF of 24" and 36" water main. Approximately 400 LF of 30" HDPE via HDD under FDOT ROW Including a 30" x 24" Tap.

S-835 Miami Dade Water and Sewer – 3071 SW 38 Ave., Miami, FL 33416 **Contact: Pedro Vigil – 305.205.5152**
Project Status: Completed 2011 **Contract Amount: $1,712,527**
Installation of 1360 LF of 24" DIP, 1085 LF of 16" DIP and 1,000 LF of 12" DIP gravity sewer piping including 11 new manholes and 108 service laterals.

City of Marathon
Florida Keys Aqueduct Authority – 1100 Kennedy Dr., Key West, FL 33040 **Contact: Joe Ivey – 305.745.3991**
Project Status: Completed 2011 **Contract Amount: $2,507,000.00**
Installation of distribution water main. 14,700 LF of 12" C-900 PVC, 2,410 LF of 12" DIP, 1,310 LF of 8" C-900 PVC, 920 LF of 6" C-900 PVC, with 57 new water services.

Wastewater System Expansion
Town of Davie – 6591 Orange Drive, Davie, FL 33314 **Contact: J.R. Richards – 954.745.7232**
Project Status: Completed 2010 **Contract Amount: $1,387,192.00**
Installation of yard piping and offset piping to wells, 10" – 26" HDPE, PVC and DIP.

Record updated.

Evaluation Refreshers: Do's and Don'ts Process and Procedures Q & A's Help

MIAMI-DADE COUNTY, FLORIDA

Capital Improvements Information System

Water and Sewer

Contractor Evaluation

MCC Contract: WS T2448
Contractor: PABON ENGINEERING INC
Department Contact: Daniel Edwards 786-552-8354

Evaluation Type: Standard Evaluation
FEIN: 10569389
Award Amount: $529,990.20

Site Project Name: CD5.18(4) Upgrade of Pump Station 827 (100%)
Site Location: 9220 SW 103 Avenue, Miami, FL 33176

Evaluator ID: HURENAN Date: 5/20/2020 Period: Completion of construction

	Rating * 4	3	2	1	N/A	Criteria
1-	◉	○	○	○	○	Schedule - Quality of schedule & adherence to schedule resulting in timeliness and minimizing delay to the owner and community.
2-	◉	○	○	○	○	Cost effectiveness & efficiency - Budget compliance & value of work.
3-	○	○	○	○	◉	Vision - Design - Concepts or adherence to criteria.
4-	◉	○	○	○	○	Cooperation - Teamwork & relationship with owner, subs and suppliers.
5-	◉	○	○	○	○	Coordination - Ability to organize, schedule and complete tasks in adherence to the schedule.
6-	◉	○	○	○	○	Accuracy & Technical Skills - Cost estimating, scheduling, shop and other drawings, plans, manuals, project documentation and conflict resolution.
7-	◉	○	○	○	○	Completeness - Compliance with contract documents, permits, Codes & standards.
8-	○	◉	○	○	○	Responsiveness - Timely, clear & concise responses to owner comments and correspondence.
9-	◉	○	○	○	○	Commitment - Intangibles & contribution to project success.
10-	◉	○	○	○	○	Personnel - Quality and dedication of project staff.
11-	◉	○	○	○	○	Management - Leadership ability.
12-	○	◉	○	○	○	Quality - Work performed correctly the first time.

Overall Performance Average: 3.8

Documentation that supports this evaluation and Contractor's/Consultant's comments can be obtained by contacting:

Daniel J. Edwards at phone# 786-552-8354

Evaluation Reviewed by: Supervisor ☐ Division Chief ☑ Assistant Director ☐ Director ☐

Reviewer Name: Daniel Edwards Reviewer Signature: [signature]

The method of delivery of this evaluation to contractor/consultant: Certified Mail ☐ EMail ☑ Fax ☐ Hand ☐

(Unresponsive Performance by contractor/consultant requires 2 delivery methods, one MUST be Certified Mail.)

Evaluation delivered to: pabonengineering@outlook.com

Record updated.

Evaluation Refreshers: Do's and Don'ts | Process and Procedures | Q & A's | Help

MIAMI-DADE COUNTY, FLORIDA

Capital Improvements Information System

Water and Sewer

Contractor Evaluation

MCC Contract: WS T2605
Contractor: PABON ENGINEERING INC
Department Contact: Rolando M Roque 305 663 7218

Evaluation Type: Standard Evaluation
FEIN: 10569389
Award Amount: $1,100,000.00

Site Project Name: Upgrade of Sewage Pump Station No. 1201

Site Location: 5301 NW 109th Avenue

Evaluator ID: RoqueR Date: 5/12/2021 Period: Project conclusion or closeout

	Rating *					
	4	3	2	1	N/A	Criteria
1-	○	◉	○	○	○	Schedule - Quality of schedule & adherence to schedule resulting in timeliness and minimizing delay to the owner and community.
2-	○	◉	○	○	○	Cost effectiveness & efficiency - Budget compliance & value of work.
3-	○	◉	○	○	○	Vision - Design - Concepts or adherence to criteria.
4-	◉	○	○	○	○	Cooperation - Teamwork & relationship with owner, subs and suppliers.
5-	○	◉	○	○	○	Coordination - Ability to organize, schedule and complete tasks in adherence to the schedule.
6-	◉	○	○	○	○	Accuracy & Technical Skills - Cost estimating, scheduling, shop and other drawings, plans, manuals, project documentation and conflict resolution.
7-	◉	○	○	○	○	Completeness - Compliance with contract documents, permits, Codes & standards.
8-	○	◉	○	○	○	Responsiveness - Timely, clear & concise responses to owner comments and correspondence.
9-	◉	○	○	○	○	Commitment - Intangibles & contribution to project success.
10-	○	◉	○	○	○	Personnel - Quality and dedication of project staff.
11-	◉	○	○	○	○	Management - Leadership ability.
12-	○	◉	○	○	○	Quality - Work performed correctly the first time.

Overall Performance Average: 3.4

Documentation that supports this evaluation and Contractor's/Consultant's comments can be obtained by contacting:

Bryan Moreno at phone# (305)721-5210

Evaluation Reviewed by: Supervisor ☑ Division Chief ☐ Assistant Director ☐ Director ☐

Reviewer Name: Rolando M Roque Reviewer Signature: 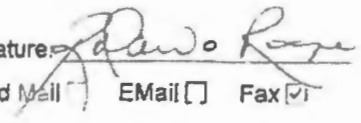

The method of delivery of this evaluation to contractor/consultant: Certified Mail ☐ EMail ☐ Fax ☑ Hand ☐

(Unresponsive Performance by contractor/consultant requires 2 delivery methods, one MUST be Certified Mail.)

Evaluation delivered to: Anibal Pabon

* Rating Key

4 Superior performance - Exemplary quality, no intervention required - project completed on time or early at or below budget with no change orders or amendments other than owner requested changes.

3 Satisfactory performance - Minor errors noted, addressed with timely corrective action. No serious errors noted or corrective action needed.

2 Guarded performance Errors and Omissions documented in writing with timely corrective action.

1 Unresponsive performance documented in writing without timely corrective action.

N/A. No Information

5/12/2021 - Project conclusion or closeout

Save/Update | EMail Rolando M Roque | EMail Rolando M Roque | Print

Exit

Date Last Edited : 04/29/2010 - 16:35:06

MIAMI-DADE COUNTY, FLORIDA

Capital Improvements Information System

Water and Sewer

Contractor Evaluation

MCC Contract: WS T2325
Contractor: PABON ENGINEERING INC
Department Contact: Rolando M Roque 305 663 7218
Site Project Name: Upgrade of PS 124
Site Location: 9350 NW 12th St

Evaluation Type: Standard Evaluation
FEIN: 10569389
Award Amount: $1,123,000.00

Evaluator ID: RoqueR Date: 3/20/2019 Period: Completion of construction

Rating *						
	4	3	2	1	N/A	Criteria
1-		✔				Schedule - Quality of schedule & adherence to schedule resulting in timeliness and minimizing delay to the owner and community.
2-		✔				Cost effectiveness & efficiency - Budget compliance & value of work.
3-		✔				Vision - Design - Concepts or adherence to criteria.
4-	✔					Cooperation - Teamwork & relationship with owner, subs and suppliers.
5-			✔			Coordination - Ability to organize, schedule and complete tasks in adherence to the schedule.
6-		✔				Accuracy & Technical Skills - Cost estimating, scheduling, shop and other drawings, plans, manuals, project documentation and conflict resolution.
7-		✔				Completeness - Compliance with contract documents, permits, Codes & standards.
8-		✔				Responsiveness - Timely, clear & concise responses to owner comments and correspondence.
9-	✔					Commitment - Intangibles & contribution to project success.
10-		✔				Personnel - Quality and dedication of project staff.
11-		✔				Management - Leadership ability.
12-		✔				Quality - Work performed correctly the first time.

Overall Performance Average: 3.1

Documentation that supports this evaluation and Contractor's/Consultant's comments can be obtained by contacting:
Luis Lopez-Blazquez at Phone# 305 446-7450

Evaluation Reviewed by: Supervisor ☑ Division Chief ☐ Assistant Director ☐ Director ☐
Reviewer Name: Rolando M Roque Reviewer Signature: Rolando M Roque

The method of delivery of this evaluation to contractor/consultant: Certified Mail ☐ EMail ☐ Fax ☑ Hand ☐
(Unresponsive Performance by contractor/consultant requires 2 delivery methods, one MUST be Certified Mail.)
Evaluation delivered to: Anibal Pabon

MIAMI-DADE COUNTY, FLORIDA

Capital Improvements Information System

Water and Sewer

Contractor Evaluation

MCC Contract: WS T2367
Contractor: PABON ENGINEERING INC
Department Contact: Alexis Valdex 786-552-8147
Site Project Name:
Site Location:

Evaluation Type: Standard Evaluation
FEIN: 10569389
Award Amount: $821,461.00

Evaluator ID: AJVALD Date: 8/3/2018 Period: Project conclusion or closeout

Rating *						
	4	3	2	1	N/A	Criteria
1-	✓					Schedule - Quality of schedule & adherence to schedule resulting in timeliness and minimizing delay to the owner and community.
2-	✓					Cost effectiveness & efficiency - Budget compliance & value of work.
3-					✓	Vision - Design - Concepts or adherence to criteria.
4-	✓					Cooperation - Teamwork & relationship with owner, subs and suppliers.
5-	✓					Coordination - Ability to organize, schedule and complete tasks in adherence to the schedule.
6-	✓					Accuracy & Technical Skills - Cost estimating, scheduling, shop and other drawings, plans, manuals, project documentation and conflict resolution.
7-	✓					Completeness - Compliance with contract documents, permits, Codes & standards.
8-	✓					Responsiveness - Timely, clear & concise responses to owner comments and correspondence.
9-	✓					Commitment - Intangibles & contribution to project success.
10-		✓				Personnel - Quality and dedication of project staff.
11-	✓					Management - Leadership ability.
12-	✓					Quality - Work performed correctly the first time.

Overall Performance Average: 3.9

Documentation that supports this evaluation and Contractor's/Consultant's comments can be obtained by contacting:
Alexis Valdes at Phone# 786 299 9008

Evaluation Reviewed by: Supervisor ☑ Division Chief ☐ Assistant Director ☐ Director ☐
Reviewer Name: Alexis Valdex Reviewer Signature:

The method of delivery of this evaluation to contractor/consultant: Certified Mail ☐ EMail ☐ Fax ☐ Hand ☑
(Unresponsive Performance by contractor/consultant requires 2 delivery methods, one MUST be Certified Mail.)
Evaluation delivered to: Anibal Pabon

Record updated.

Evaluation Refreshers: Do's and Don'ts Process and Procedures Q & A's Help

MIAMI-DADE COUNTY, FLORIDA

Capital Improvements Information System

Water and Sewer

Contractor Evaluation

MCC Contract: WS T2466
Contractor: PABON ENGINEERING INC
Department Contact: Daniel Edwards 786-552-8354

Evaluation Type: Standard Evaluation
FEIN: 10569388
Award Amount: $2,107,702.00

Site Project Name: CD 4.9(48-53, 63) Installation of 16, 12, 8 inch DIP Force Mains (75%)

Site Location: From SW 142 Ave and SW 288 St to SW 123 Ct and SW 258 ST

Evaluator ID: HURENAN Date: 11/26/2019 Period: Interim

	Rating *					
	4	3	2	1	N/A	Criteria
1-	◉	○	○	○	○	Schedule - Quality of schedule & adherence to schedule resulting in timeliness and minimizing delay to the owner and community.
2-	◉	○	○	○	○	Cost effectiveness & efficiency - Budget compliance & value of work.
3-	○	○	○	○	◉	Vision - Design - Concepts or adherence to criteria.
4-	◉	○	○	○	○	Cooperation - Teamwork & relationship with owner, subs and suppliers.
5-	◉	○	○	○	○	Coordination - Ability to organize, schedule and complete tasks in adherence to the schedule.
6-	○	◉	○	○	○	Accuracy & Technical Skills - Cost estimating, scheduling, shop and other drawings, plans, manuals, project documentation and conflict resolution.
7-	○	◉	○	○	○	Completeness - Compliance with contract documents, permits, Codes & standards.
8-	◉	○	○	○	○	Responsiveness - Timely, clear & concise responses to owner comments and correspondence.
9-	◉	○	○	○	○	Commitment - Intangibles & contribution to project success.
10-	◉	○	○	○	○	Personnel - Quality and dedication of project staff.
11-	◉	○	○	○	○	Management - Leadership ability.
12-	◉	○	○	○	○	Quality - Work performed correctly the first time.

Overall Performance Average: 3.8

Documentation that supports this evaluation and Contractor's/Consultant's comments can be obtained by contacting:

Daniel J. Edwards at phone# 786-552-8354

Evaluation Reviewed by: Supervisor ☐ Division Chief ☑ Assistant Director ☐ Director ☐

Reviewer Name: Daniel Edwards Reviewer Signature: Daniel Edwards

The method of delivery of this evaluation to contractor/consultant: Certified Mail ☐ EMail ☑ Fax ☐ Hand ☐

(Unresponsive Performance by contractor/consultant requires 2 delivery methods, one MUST be Certified Mail.)

Evaluation delivered to: pabonengineering@outlook.com

Record updated.

Evaluation Refreshers: Do's and Don'ts Process and Procedures Q & A's Help

MIAMI-DADE COUNTY, FLORIDA

Capital Improvements Information System

Water and Sewer

Contractor Evaluation

MCC Contract: WS T2503
Contractor: PABON ENGINEERING INC
Department Contact: Miguel Hernandez 786-552-8803

Evaluation Type: Standard Evaluation
FEIN: 10569389
Award Amount: $380,129.91

Site Project Name: CD4.9(65) Replacement of 6-in ACP FM from PS 1005 to 1006 and MH 165 (final)

Site Location: SW 289 Terr, SW 154 CT, SW 288 ST

Evaluator ID: HURENAN Date: 8/4/2020 Period: Completion of construction

	Rating * 4	3	2	1	N/A	Criteria
1-	◉	○	○	○	○	Schedule - Quality of schedule & adherence to schedule resulting in timeliness and minimizing delay to the owner and community.
2-	◉	○	○	○	○	Cost effectiveness & efficiency - Budget compliance & value of work.
3-	○	○	○	○	◉	Vision - Design - Concepts or adherence to criteria.
4-	◉	○	○	○	○	Cooperation - Teamwork & relationship with owner, subs and suppliers.
5-	◉	○	○	○	○	Coordination - Ability to organize, schedule and complete tasks in adherence to the schedule.
6-	○	◉	○	○	○	Accuracy & Technical Skills - Cost estimating, scheduling, shop and other drawings, plans, manuals, project documentation and conflict resolution.
7-	◉	○	○	○	○	Completeness - Compliance with contract documents, permits, Codes & standards.
8-	◉	○	○	○	○	Responsiveness - Timely, clear & concise responses to owner comments and correspondence.
9-	◉	○	○	○	○	Commitment - Intangibles & contribution to project success.
10-	◉	○	○	○	○	Personnel - Quality and dedication of project staff.
11-	◉	○	○	○	○	Management - Leadership ability.
12-	○	◉	○	○	○	Quality - Work performed correctly the first time.

Overall Performance Average: 3.8

Documentation that supports this evaluation and Contractor's/Consultant's comments can be obtained by contacting:

Daniel J. Edwards at phone# 786-552-8354

Evaluation Reviewed by: Supervisor ☐ Division Chief ☑ Assistant Director ☐ Director ☐

Reviewer Name: Daniel Edwards Reviewer Signature:

The method of delivery of this evaluation to contractor/consultant: Certified Mail ☐ EMail ☑ Fax ☐ Hand ☐

(Unresponsive Performance by contractor/consultant requires 2 delivery methods, one MUST be Certified Mail.)

Evaluation delivered to: pabonengineering@outlook.com

MIAMI-DADE COUNTY, FLORIDA

Capital Improvements Information System

Parks, Recreation and Open Spaces

Contractor Evaluation

MCC Contract: PR Z201909
Contractor: PABON ENGINEERING INC
Department Contact: Chad Douglas (305) 251-0400
Site Project Name: Florida Field Concrete
Site Location: Zoo Miami

Evaluation Type: Standard Evaluation
FEIN: 10569389
Award Amount: $55,000.00

Evaluator ID: ChadD Date: 9/18/2019 Period: Project conclusion or closeout

Rating *						
	4	3	2	1	N/A	Criteria
1-		✓				Schedule - Quality of schedule & adherence to schedule resulting in timeliness and minimizing delay to the owner and community.
2-	✓					Cost effectiveness & efficiency - Budget compliance & value of work.
3-		✓				Vision - Design - Concepts or adherence to criteria.
4-	✓					Cooperation - Teamwork & relationship with owner, subs and suppliers.
5-		✓				Coordination - Ability to organize, schedule and complete tasks in adherence to the schedule.
6-		✓				Accuracy & Technical Skills - Cost estimating, scheduling, shop and other drawings, plans, manuals, project documentation and conflict resolution.
7-		✓				Completeness - Compliance with contract documents, permits, Codes & standards.
8-	✓					Responsiveness - Timely, clear & concise responses to owner comments and correspondence.
9-		✓				Commitment - Intangibles & contribution to project success.
10-		✓				Personnel - Quality and dedication of project staff.
11-	✓					Management - Leadership ability.
12-		✓				Quality - Work performed correctly the first time.

Overall Performance Average: 3.3

Documentation that supports this evaluation and Contractor's/Consultant's comments can be obtained by contacting:
Chad Douglas at Phone# 305-343-9265

Evaluation Reviewed by: Supervisor ☑ Division Chief ☐ Assistant Director ☐ Director ☐
Reviewer Name: Chad Douglas Reviewer Signature:

The method of delivery of this evaluation to contractor/consultant: Certified Mail ☐ EMail ☒ Fax ☑ Hand ☐
(Unresponsive Performance by contractor/consultant requires 2 delivery methods, one MUST be Certified Mail.)
Evaluation delivered to: Alejandro Balsinde

MIAMI-DADE COUNTY, FLORIDA

Capital Improvements Information System

Water and Sewer

Contractor Evaluation

MCC Contract: WS T2431
Contractor: PABON ENGINEERING INC
Department Contact: Jose E. Alvarez 786-552-4365
Site Project Name: Installation of 8-inch D.I. W.M.
Site Location: SW 88 Ave.from SW 110 St. to SW 107 St.and In SW 110 St. from SW 88 Ave. to SW 87 Ave.

Evaluation Type: Standard Evaluation
FEIN: 10569389
Award Amount: $495,697.50

Evaluator ID: JOALVA Date: 11/29/2018 Period: Completion of construction

Rating *						
	4	3	2	1	N/A	Criteria
1-	✓					Schedule - Quality of schedule & adherence to schedule resulting in timeliness and minimizing delay to the owner and community.
2-	✓					Cost effectiveness & efficiency - Budget compliance & value of work.
3-					✓	Vision - Design - Concepts or adherence to criteria.
4-	✓					Cooperation - Teamwork & relationship with owner, subs and suppliers.
5-	✓					Coordination - Ability to organize, schedule and complete tasks in adherence to the schedule.
6-	✓					Accuracy & Technical Skills - Cost estimating, scheduling, shop and other drawings, plans, manuals, project documentation and conflict resolution.
7-	✓					Completeness - Compliance with contract documents, permits, Codes & standards.
8-	✓					Responsiveness - Timely, clear & concise responses to owner comments and correspondence.
9-	✓					Commitment - Intangibles & contribution to project success.
10-	✓					Personnel - Quality and dedication of project staff.
11-	✓					Management - Leadership ability.
12-	✓					Quality - Work performed correctly the first time.

Overall Performance Average: 4.0

Documentation that supports this evaluation and Contractor's/Consultant's comments can be obtained by contacting:
Jose Eduardo Alvarez at Phone# 786-236-5325

Evaluation Reviewed by: Supervisor ☑ Division Chief ☐ Assistant Director ☐ Director ☐
Reviewer Name: Miguel Pichardo Reviewer Signature: ___

The method of delivery of this evaluation to contractor/consultant: Certified Mail ☐ EMail ☐ Fax ☑ Hand ☐
(Unresponsive Performance by contractor/consultant requires 2 delivery methods, one MUST be Certified Mail.)
Evaluation delivered to: Pabon Engineering

Record updated.

Evaluation Refreshers: Do's and Don'ts Process and Procedures Q & A's Help

MIAMI-DADE COUNTY, FLORIDA

Capital Improvements Information System

Water and Sewer

Contractor Evaluation

MCC Contract: WS T2358
Contractor: PABON ENGINEERING INC
Department Contact: Daniel Edwards 786-552-8354

Evaluation Type: Standard Evaluation
FEIN: 10569389
Award Amount: $447,765.99

Site Project Name: CD 4.9(71) Installation of 6-in, 8-in, 12-in DI FM from PS 0444 to PS 0445

Site Location: NW 207 Street from NW 22 Ave to 17 Avenue

Evaluator ID: HURENAN Date: 4/14/2020 Period: Completion of construction

	Rating * 4	3	2	1	N/A	Criteria
1-	◉	○	○	○	○	Schedule - Quality of schedule & adherence to schedule resulting in timeliness and minimizing delay to the owner and community.
2-	◉	○	○	○	○	Cost effectiveness & efficiency - Budget compliance & value of work.
3-	○	○	○	○	◉	Vision - Design - Concepts or adherence to criteria.
4-	◉	○	○	○	○	Cooperation - Teamwork & relationship with owner, subs and suppliers.
5-	◉	○	○	○	○	Coordination - Ability to organize, schedule and complete tasks in adherence to the schedule.
6-	◉	○	○	○	○	Accuracy & Technical Skills - Cost estimating, scheduling, shop and other drawings, plans, manuels, project documentation and conflict resolution.
7-	◉	○	○	○	○	Completeness - Compliance with contract documents, permits, Codes & standards.
8-	◉	○	○	○	○	Responsiveness - Timely, clear & concise responses to owner comments and correspondence.
9-	◉	○	○	○	○	Commitment - Intangibles & contribution to project success.
10-	◉	○	○	○	○	Personnel - Quality and dedication of project staff.
11-	◉	○	○	○	○	Management - Leadership ability.
12-	○	◉	○	○	○	Quality - Work performed correctly the first time.

Overall Performance Average: 3.9

Documentation that supports this evaluation and Contractor's/Consultant's comments can be obtained by contacting:

Daniel J. Edwards at phone# 786-552-8354

Evaluation Reviewed by: Supervisor ☐ Division Chief ☑ Assistant Director ☐ Director ☐

Reviewer Name: Daniel Edwards Reviewer Signature: [signature]

The method of delivery of this evaluation to contractor/consultant: Certified Mail ☐ EMail ☑ Fax ☐ Hand ☐

(Unresponsive Performance by contractor/consultant requires 2 delivery methods, one MUST be Certified Mail.)

Evaluation delivered to: pabonengineering@outlook.com

Evaluation Refreshers: Do's and Don'ts Process and Procedures Q & A's Help

MIAMI-DADE COUNTY, FLORIDA

Capital Improvements Information System

Water and Sewer

Contractor Evaluation

MCC Contract: WS T2327
Contractor: PABON ENGINEERING INC
Department Contact: Daniel Edwards 786-552-8354

Evaluation Type: Standard Evaluation
FEIN: 10569389
Award Amount: $605,952.00

Site Project Name: CD 4.9 (23) Installation of 8 inch 10 inch and 12 inch Force Main from PS 1022 -75

Site Location: SW 348 St and SW 169 Ave

Evaluator ID: HURENAN Date: 5/16/2018 Period: Interim

	Rating * 4	3	2	1	N/A	Criteria
1-	◉	○	○	○	○	Schedule - Quality of schedule & adherence to schedule resulting in timeliness and minimizing delay to the owner and community.
2-	○	◉	○	○	○	Cost effectiveness & efficiency - Budget compliance & value of work.
3-	○	○	○	○	◉	Vision - Design - Concepts or adherence to criteria.
4-	◉	○	○	○	○	Cooperation - Teamwork & relationship with owner, subs and suppliers.
5-	◉	○	○	○	○	Coordination - Ability to organize, schedule and complete tasks in adherence to the schedule.
6-	○	◉	○	○	○	Accuracy & Technical Skills - Cost estimating, scheduling, shop and other drawings, plans, manuals, project documentation and conflict resolution.
7-	○	◉	○	○	○	Completeness - Compliance with contract documents, permits, Codes & standards.
8-	◉	○	○	○	○	Responsiveness - Timely, clear & concise responses to owner comments and correspondence.
9-	◉	○	○	○	○	Commitment - Intangibles & contribution to project success.
10-	○	◉	○	○	○	Personnel - Quality and dedication of project staff.
11-	◉	○	○	○	○	Management - Leadership ability.
12-	◉	○	○	○	○	Quality - Work performed correctly the first time.

Overall Performance Average: 3.6

Documentation that supports this evaluation and Contractor's/Consultant's comments can be obtained by contacting:

Daniel J. Edwards at phone# 786-552-8354

Evaluation Reviewed by: Supervisor ☐ Division Chief ☑ Assistant Director ☐ Director ☐

Reviewer Name: Daniel Edwards Reviewer Signature:

The method of delivery of this evaluation to contractor/consultant: Certified Mail ☐ EMail ☑ Fax ☐ Hand ☐

(Unresponsive Performance by contractor/consultant requires 2 delivery methods, one MUST be Certified Mail.)

Evaluation delivered to: pabonengineering@outlook.com

Evaluation Refreshers: Do's and Don'ts Process and Procedures Q & A's Help

MIAMI-DADE COUNTY, FLORIDA

Capital Improvements Information System

Water and Sewer

Contractor Evaluation

MCC Contract: WS T2288
Contractor: PABON ENGINEERING INC
Department Contact: Daniel Edwards 786-552-8354

Evaluation Type: Standard Evaluation
FEIN: 10569389
Award Amount: $296,032.00

Site Project Name: CD 4.10(3) installation of 16 inch DI FM Connection existing 12-in and 30-in DI FM

Site Location: NW 159 ST and NW 57 Ave

Evaluator ID: HURENAN Date: 7/17/2018 Period: Completion of construction

	Rating * 4	3	2	1	N/A	Criteria
1-	◉	○	○	○	○	Schedule - Quality of schedule & adherence to schedule resulting in timeliness and minimizing delay to the owner and community.
2-	◉	○	○	○	○	Cost effectiveness & efficiency - Budget compliance & value of work.
3-	○	○	○	○	◉	Vision - Design - Concepts or adherence to criteria.
4-	◉	○	○	○	○	Cooperation - Teamwork & relationship with owner, subs and suppliers.
5-	◉	○	○	○	○	Coordination - Ability to organize, schedule and complete tasks in adherence to the schedule.
6-	○	◉	○	○	○	Accuracy & Technical Skills - Cost estimating, scheduling, shop and other drawings, plans, manuals, project documentation and conflict resolution.
7-	○	◉	○	○	○	Completeness - Compliance with contract documents, permits, Codes & standards.
8-	◉	○	○	○	○	Responsiveness - Timely, clear & concise responses to owner comments and correspondence.
9-	◉	○	○	○	○	Commitment - Intangibles & contribution to project success.
10-	○	◉	○	○	○	Personnel - Quality and dedication of project staff.
11-	◉	○	○	○	○	Management - Leadership ability.
12-	◉	○	○	○	○	Quality - Work performed correctly the first time.

Overall Performance Average: 3.7

Documentation that supports this evaluation and Contractor's/Consultant's comments can be obtained by contacting:

Daniel J. Edwards at phone# 786-552-8354

Evaluation Reviewed by: Supervisor ☐ Division Chief ☑ Assistant Director ☐ Director ☐

Reviewer Name: Daniel Edwards Reviewer Signature: 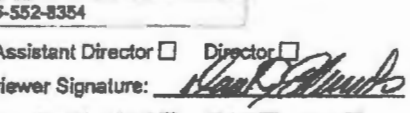

The method of delivery of this evaluation to contractor/consultant: Certified Mail ☐ EMail ☑ Fax ☐ Hand ☐

(Unresponsive Performance by contractor/consultant requires 2 delivery methods, one MUST be Certified Mail.)

Evaluation delivered to: pabonengineering@outlook.com

PABON ENGINEERING, INC

Equipment List

ID	Equipment	Make/Model
EX 01	Excavator – 50,416 lbs.	2006 CAT 321CLCR
EX 02	Excavator – 72,800 lbs.	2002 John Deere 330
EX 03	Excavator – 11,375 lbs.	2010 Komatsu PC55MR-3
EX 04	Excavator – 3,902 lbs.	2016 Takeuchi TB216
EX 05	Excavator – 36,200 lbs.	2006 CAT 315CL
EX 06	Excavator – 12,450 lbs.	2014 Takeuchi TB153 FR
EX 07	Excavator – 97,530 lbs.	John Deere 992
EX 08	Excavator – 30,440 lbs.	2008 Hitachi 135
EX 09	Excavator – 10,760 lbs.	2005 Takeuchi 145B
S 01	Skidsteer – 8,012 lbs. (V)	2014 CAT 262D
S 02	Skidsteer – 8,012 lbs.	2014 CAT 262D
S 03	Skidsteer – 8,012 lbs. (J)	2017 CAT 262D
LD 01	Loader – 23,105 lbs.	2003 Komatsu WA250-3MC
LD 02	Loader – 26,750 lbs.	1998 CAT IT28G
LD 03	Loader – 33,587 lbs.	2007 John Deere 624J
M 01	Milling Machine – 40,000 lbs.	2006 Wirtgen W1200F
P 01	Paving Machine – 15,800 lbs.	2011 Leeboy 8500B
R 01	Roller – 5,390 lbs.	2013 Hamm HD12VV
R 02	Roller – 5,725 lbs.	Ingersoll Rand DD24
R 03	Roller – 27,260 lbs.	2003 Ingersoll Rand DD118
	Plate Compactor – 700 lbs. (B)	2011 Wacker BPU4045A
	Plate Compactor – 700 lbs.	2018 Wacker BPU4045A
	Plate Compactor – 700 lbs. JC	2018 Wacker BPU4045A
	Plate Compactor (Red)	
	Plate Compactor (small)	Wacker VP1550AW
M 02	Milling Attachment	CAT PC306B 24"
M 03	Milling Attachment	CAT PC305B 18"
T 01	Tack Wagon	2020 Marathon TPS250T
	Push broom	
BR 03	Sweepster PB 72"	Paladin 22072MH-0022
BR 05	Sweepster PB 72"	2014 Paladin 22084MH-0022
BR 01	Boxbroom 60"	Bobcat
BR 04	Boxbroom 72"	*Unknown*
	Grader Attachment	
	Hand Saw	
	Hand Saw	
	Hand Saw	

	Asphalt Trailer	
	Equipment Trailer	2017 Load Trail EQ83
	Screener	
	Walk Behind Saw	
W 01	Water Trailer	2011 Wylie & Sons
LT 01	Light Tower	2012 Terex RL4
LT 02	Light Tower	2011 Terex RL4000
		Trailer

Pumps, Other Plate Compactors

Work Vehicles

Driver	Make/Model
Balsinde, A.	2017 Chevrolet Silverado 1500
Martinez, P.	2006 Ford F-450 Utility Truck
Martinez, J.	2017 Toyota Tundra
Pabon, A.	2019 Ford Raptor
Felipe, J.	2001 Isuzu NPR
Lucero, D.	2014 Mitsubishi Fuso
Boan, A.	2001 Mack RB600 Dump Truck
-yard	2000 Ford F-650
-yard	1997 Freightliner Ambulance

CERTIFICATE OF LIABILITY INSURANCE

DATE (MM/DD/YYYY): 01/08/2026

THIS CERTIFICATE IS ISSUED AS A MATTER OF INFORMATION ONLY AND CONFERS NO RIGHTS UPON THE CERTIFICATE HOLDER. THIS CERTIFICATE DOES NOT AFFIRMATIVELY OR NEGATIVELY AMEND, EXTEND OR ALTER THE COVERAGE AFFORDED BY THE POLICIES BELOW. THIS CERTIFICATE OF INSURANCE DOES NOT CONSTITUTE A CONTRACT BETWEEN THE ISSUING INSURER(S), AUTHORIZED REPRESENTATIVE OR PRODUCER, AND THE CERTIFICATE HOLDER.

IMPORTANT: If the certificate holder is an ADDITIONAL INSURED, the policy(ies) must have ADDITIONAL INSURED provisions or be endorsed. If SUBROGATION IS WAIVED, subject to the terms and conditions of the policy, certain policies may require an endorsement. A statement on this certificate does not confer rights to the certificate holder in lieu of such endorsement(s).

PRODUCER	CONTACT NAME: Amanda Nogues	
Eastern Insurance Group, Inc. 7400 SW 50th Terrace Suite 100 Miami FL 33155	PHONE (A/C, No, Ext): (305) 595-3323	FAX (A/C, No): (305) 595-7135
	E-MAIL ADDRESS: amanda.nogues@eigrisk.com	

INSURED	INSURER(S) AFFORDING COVERAGE	NAIC #
Pabon Engineering, Inc. 13028 SW 128th Street Miami FL 33186	INSURER A: Monroe Guaranty Insurance Company	32506
	INSURER B: Brierfield Insurance Company	10993
	INSURER C: FCCI Insurance Company	10178
	INSURER D: Westchester Surplus Lines Ins. Co.	
	INSURER E:	
	INSURER F:	

COVERAGES **CERTIFICATE NUMBER:** Master 25-26 **REVISION NUMBER:**

THIS IS TO CERTIFY THAT THE POLICIES OF INSURANCE LISTED BELOW HAVE BEEN ISSUED TO THE INSURED NAMED ABOVE FOR THE POLICY PERIOD INDICATED. NOTWITHSTANDING ANY REQUIREMENT, TERM OR CONDITION OF ANY CONTRACT OR OTHER DOCUMENT WITH RESPECT TO WHICH THIS CERTIFICATE MAY BE ISSUED OR MAY PERTAIN, THE INSURANCE AFFORDED BY THE POLICIES DESCRIBED HEREIN IS SUBJECT TO ALL THE TERMS, EXCLUSIONS AND CONDITIONS OF SUCH POLICIES. LIMITS SHOWN MAY HAVE BEEN REDUCED BY PAID CLAIMS.

INSR LTR	TYPE OF INSURANCE	ADDL INSD	SUBR WVD	POLICY NUMBER	POLICY EFF (MM/DD/YYYY)	POLICY EXP (MM/DD/YYYY)	LIMITS	
A	[X] COMMERCIAL GENERAL LIABILITY [ ] CLAIMS-MADE [X] OCCUR GEN'L AGGREGATE LIMIT APPLIES PER: [ ] POLICY [X] PRO-JECT [ ] LOC [ ] OTHER:			GL10010279200	07/21/2025	07/21/2026	EACH OCCURRENCE DAMAGE TO RENTED PREMISES (Ea occurrence) MED EXP (Any one person) PERSONAL & ADV INJURY GENERAL AGGREGATE PRODUCTS - COMP/OP AGG [ ]	$ 1,000,000 $ 50,000 $ 10,000 $ 1,000,000 $ 2,000,000 $ 2,000,000 $
B	AUTOMOBILE LIABILITY [X] ANY AUTO [ ] OWNED AUTOS ONLY [ ] SCHEDULED AUTOS [X] HIRED AUTOS ONLY [X] NON-OWNED AUTOS ONLY			CA10010279000	07/21/2025	07/21/2026	COMBINED SINGLE LIMIT (Ea accident) BODILY INJURY (Per person) BODILY INJURY (Per accident) PROPERTY DAMAGE (Per accident) Medical payments	$ 1,000,000 $ $ $ $ 5,000
C	[X] UMBRELLA LIAB [X] OCCUR [ ] EXCESS LIAB [ ] CLAIMS-MADE [ ] DED [ ] RETENTION $			UMB10010279700	07/21/2025	07/21/2026	EACH OCCURRENCE AGGREGATE [ ]	$ 5,000,000 $ 5,000,000 $
C	WORKERS COMPENSATION AND EMPLOYERS' LIABILITY ANY PROPRIETOR/PARTNER/EXECUTIVE OFFICER/MEMBER EXCLUDED? (Mandatory in NH) Y/N: N If yes, describe under DESCRIPTION OF OPERATIONS below	N/A		WC010010279600	07/21/2025	07/21/2026	[X] PER STATUTE [ ] OTH-ER E.L. EACH ACCIDENT E.L. DISEASE - EA EMPLOYEE E.L. DISEASE - POLICY LIMIT	 $ 1,000,000 $ 1,000,000 $ 1,000,000
D	Pollution	Y		G72503673 005	01/08/2025	07/21/2026	General Aggregate Per Occurrence	$2,000,000 $1,000,000

DESCRIPTION OF OPERATIONS / LOCATIONS / VEHICLES (ACORD 101, Additional Remarks Schedule, may be attached if more space is required)

Certificate holder is listed as an additional insured with respect to Pollution liability. Coverage as additional insured is provided if required by written contract.

CERTIFICATE HOLDER

FL 33065

CANCELLATION

SHOULD ANY OF THE ABOVE DESCRIBED POLICIES BE CANCELLED BEFORE THE EXPIRATION DATE THEREOF, NOTICE WILL BE DELIVERED IN ACCORDANCE WITH THE POLICY PROVISIONS.

AUTHORIZED REPRESENTATIVE

© 1988-2015 ACORD CORPORATION. All rights reserved.

Local Business Tax Receipt

Miami-Dade County Office of The TaxCollector

–THIS IS NOT A BILL – DO NOT PAY

5351978

BUSINESS NAME/LOCATION
PABON ENGINEERING INC
13028 SW 128TH ST
MIAMI, FL 33186-5880

RECEIPT NO:
RENEWAL
7530102

DARIEL FERNANDEZ
MIAMI-DADE COUNTY
IN GOD WE TRUST
TAX COLLECTOR

EXPIRES
SEPTEMBER 30, 2026

Must be displayed at place of business
Pursuant to County Code
Chapter 8A – Art. 9 & 10

OWNER
PABON ENGINEERING INC
C/O ANIBAL PABON

Worker(s) 1

SEC. TYPE OF BUSINESS
196 SPECIALTY ENGINEERING CONTRACT
E1800135

PAYMENT RECEIVED BY TAX COLLECTOR
75.00 09/25/2025
PTBTC-25-163092

LBT

This Local Business Tax Receipt only confirms payment of the Local Business Tax. The Receipt is not a license, permit, or a certification of the holder's qualifications, to do business. Holder must comply with any governmental or nongovernmental regulatory laws and requirements which apply to the business.

The RECEIPT NO. above must be displayed on all commercial vehicles – Miami-Dade Code Sec 8a-276.

For more information, visit mdctaxcollector.gov

Local Business Tax Receipt

Miami-Dade County Office of The TaxCollector

-THIS IS NOT A BILL - DO NOT PAY

5351978

RECEIPT NO.
RENEWAL
5589560

BUSINESS NAME/LOCATION
PABON ENGINEERING INC
13028 SW 128TH ST
MIAMI, FL 33186-5880

DARIEL FERNANDEZ
MIAMI-DADE COUNTY
TAX COLLECTOR

EXPIRES
SEPTEMBER 30, 2026

Must be displayed at place of business
Pursuant to County Code
Chapter 8A – Art. 9 & 10

OWNER
PABON ENGINEERING INC
C/O ANIBAL PABON

SEC. TYPE OF BUSINESS
196 SPECIALTY ENGINEERING CONTRACT

PAYMENT RECEIVED BY TAX COLLECTOR
75.00 09/25/2025
PTBTC-25-163092

Worker(s) 5

CUC1223948

LBT

This Local Business Tax Receipt only confirms payment of the Local Business Tax. The Receipt is not a license, permit, or a certification of the holder's qualifications, to do business. Holder must comply with any governmental or nongovernmental regulatory laws and requirements which apply to the business.

The RECEIPT NO. above must be displayed on all commercial vehicles – Miami-Dade Code Sec 8a-276.

For more information, visit mdctaxcollector.gov

E-Verify Employment Eligibility Verification Tutorial

Tutorial Home Exit Tutorial Log Out

Knowledge Test Results

Congratulations!

Milagro Pabon (MPAB1277), your score is 96.43%

Milagro Pabon, you successfully completed this tutorial and passed the E-Verify Knowledge Test on June 07, 2021.

Use your browser's print capability to obtain a copy of this page for your records.

To use E-Verify, select 'Exit Tutorial.'

E-Verify

REMINDER: You must visit 'View Essential Resources' to read the E-Verify User Manual, and you must print and clearly display the 'Notice of E-Verify Participation' and 'Right to Work' posters in all languages supplied by DHS.

An official website of the United States government Here's how you know

Federal Service Desk Help During Temporary Government Shutdown
Show Details
Oct 9, 2025

See All Alerts

Revolutionary FAR Overhaul Impacts to SAM.gov
Show Details
Aug 15, 2025

SAM.GOV

Home Search Data Bank Data Services Help

Entity Workspace

Get Started

Show Workspace For:
Non-Federal Entities

Non-Federal Entities

Filter By

Keyword

Entity

Status

- [ ] Work in Progress Registration
- [ ] Submitted Registration
- [ ] Active Registration
- [ ] Inactive Registration
- [x] ID Assigned
- [ ] Pending ID Assignment

Expiration Date

FSD Number

Address Update

Reset

page 1 of 1

results per page 25

Sort by Expiration Date Ascending

PABON ENGINEERING ID Assigned

View More

Unique Entity ID:
NS95MVFK6NG3

Doing Business As:
(blank)

Physical Address:
13028 SW 128TH ST.
MIAMI, FL 33186-5880
USA

Expiration Date
(blank)

PABON ENGINEERING, INC.

FINANCIAL STATEMENTS

YEARS ENDED DECEMBER 31, 2024 AND 2023

JAVIER G. GONZALEZ, CPA, P.A.
Certified Public Accountant

Pabon Engineering, Inc.
Balance Sheets
December 31, 2024 and 2023

	2024	2023
Assets		
Current Assets:		
Cash	$ 1,304,098	$ 1,350,654
Contracts Receivable, net	2,269,901	1,349,771
Contract Assets, net	306,413	-
Cost and Estimated Earnings in Excess of Billings On Uncompleted Contracts	48,164	345,822
Total Current Assets	3,928,576	3,046,247
Property and Equipment, net	1,087,610	832,323
Other Assets:		
Intangible Assets, net	5,542	6,094
Total Other Assets	5,542	6,094
Total Assets	$ 5,021,728	$ 3,884,664
Liabilities and Stockholder's Equity		
Current Liabilities:		
Accounts Payable and Accrued Expenses	$ 173,384	$ 283,339
Current Portion of Long-Term Debt	-	10,550
Current Portion of Lease Liabilities	4,738	25,714
Billings in Excess of Costs and Estimated Earnings on Uncompleted Contracts	1,374,439	1,314,963
Other Liabilities	1,333	-
Total Current Liabilities	1,553,894	1,634,566
Long Term Debt, net of Current Portion	-	1,100
Long Term Lease Liabilities, net of Current Portion	-	4,082
Stockholder's Equity:		
Common Stock – 1,00 shares of $1 par value, authorized issued and outstanding	1,000	1,000
Additional Paid-In Capital	258,924	258,924
Retained Earnings (Deficit)	3,207,910	1,984,992
Total Stockholder's Equity	3,467,834	2,244,916
Total Liabilities and Stockholder's Equity	$ 5,021,728	$ 3,884,664

See Accountant's Review Report and Accompanying Notes to the Financial Statements

Pabon Engineering, Inc
Statements of Income
For the Years Ended December 31, 2024 and 2023

	2024	2023
Contract Revenues	$ 10,170,343	$ 6,862,060
Direct Costs	7,257,412	5,008,493
Gross Profit on Contracts	2,912,931	1,853,567
General and Administrative Expenses	657,923	846,180
Income from Operations	2,255,008	1,007,387
Other Income (Expenses):		
Interest Expense	(3,564)	(9,239)
Interest Income	40,230	11,020
Other Income	10,801	-
Gain (Loss) on Disposal of Fixed Assets	21,189	1,919
Total Other Income (Expenses)	68,656	3,700
Net Income	$ 2,323,664	$ 1,011,087

See Accountant's Review Report and Accompanying Notes to the Financial Statements

ALTER
SURETY GROUP
www.altersurety.com

July 2, 2025

RE: PABON ENGINEERING, INC.
13028 SW 128TH ST.,
Miami, FL 33186

To Whom It May Concern:

This is to advise you that our office provides Bid, Performance, and Payment Bonds for Pabon Engineering, Inc. Their surety is Cincinnati Insurance Company, which carries an A.M. Best Rating of A+ XV (Excellent) and is listed in the Department of the Treasury's Federal Register.

Based upon normal and standard underwriting criteria at the time of the request, we anticipate providing Performance and Payment Bonds for single size jobs in the $20,000,000 range and $50,000,000 in the aggregate. These amounts should not be construed as a limit but rather a guide to handle their day-to-day needs. We obviously reserve the right to review all contractual documents, bond forms, and obtain satisfactory evidence of funding prior to final commitment to issue any bonds.

Pabon Engineering, Inc. is an excellent contractor and we hold them in high regard. Obviously, we feel extremely confident in our contractor and encourage you to offer them an opportunity to execute any upcoming projects.

This letter is not an assumption of liability. It is issued only as a bonding reference requested by our respected client. If you should have any questions, please do not hesitate to give me a call.

Sincerely,

Jonathan Bursevich
Resident Agent

5979 N.W. 151st Street • Suite 202 • Miami Lakes, FL 33014
Phone: 305-517-3803 • Fax: 305-328-4838

FLORIDA DEPARTMENT OF FINANCIAL SERVICES

JONATHAN ANTHONY BURSEVICH

License Number : W227215

Resident Insurance License

- 0220 - GENERAL LINES (PROP & CAS)

Issue Date

11/17/2014

Please Note: A licensee may only transact insurance with an active appointment by an eligible insurance company. If you are acting as a surplus lines agent, public adjuster, or reinsurance intermediary manager/broker, you should have an appointment recorded in your [illegible] with the Department. If you are unsure of your license status you should contact the Florida Department of Financial Services [illegible] more than 18 months elapse without an appointment for each class of insurance listed. If such expiration occurs, the individual will be required to re-qualify as a first time applicant. If this license was obtained by passing a licensure examination offered by the Florida Department of Financial Services, the licensee is required to comply with continuing education requirements contained in 626.2615 or 648.385 Florida Statutes. A licensee may track their continuing education requirements completed or needed in their MyProfile account at https://fdice.fldfs.com. To validate the accuracy of this license you may review the individual license record under "License Search" on the Florida Department of Financial Services website at http://www.MyFloridaCFO.com/Division/Agent

Jeff Atwater
Chief Financial Officer
State of Florida

OSHA's Form 300A (Rev. 01/2004)

Summary of Work-Related Injuries and Illnesses

Year 2025

U.S. Department of Labor
Occupational Safety and Health Administration
Form approved OMB no. 1218-0176

All establishments covered by Part 1904 must complete this Summary page, even if no injuries or illnesses occurred during the year. Remember to review the Log to verify that the entries are complete

Using the Log, count the individual entries you made for each category. Then write the totals below, making sure you've added the entries from every page of the log. If you had no cases write "0."

Employees former employees, and their representatives have the right to review the OSHA Form 300 in its entirety. They also have limited access to the OSHA Form 301 or its equivalent. See 29 CFR 1904.35, in OSHA's Recordkeeping rule, for further details on the access provisions for these forms.

Number of Cases

Total number of deaths	Total number of cases with days away from work	Total number of cases with job transfer or restriction	Total number of other recordable cases
0	0	0	0
(G)	(H)	(I)	(J)

Number of Days

Total number of days away from work	Total number of days of job transfer or restriction
0	0
(K)	(L)

Injury and Illness Types

Total number of...	(M)		(M)
(1) Injury	0	(4) Poisoning	0
(2) Skin Disorder	0	(5) Hearing Loss	0
(3) Respiratory Condition	0	(6) All Other Illnesses	0

Establishment information

Your establishment name Pabon Engineering, Inc.

Street 13028 SW 128 Street

City Miami State FL Zip 33186

Industry description (e.g., Manufacture of motor truck trailers)
Underground Utilities and Excavation

Standard Industrial Classification (SIC), if known (e.g., SIC 3715)
___ ___ ___ ___

OR North American Industrial Classification (NAICS), if known (e.g., 336212)
2 3 7 9 9 0

Employment information

Annual average number of employees 23

Total hours worked by all employees last year 44,287

Sign here

Knowingly falsifying this document may result in a fine.

I certify that I have examined this document and that to the best of my knowledge the entries are true, accurate, and complete.

Anibal Pabon
Company executive

President
Title

305-218-3547
Phone

1/13/2026
Date

Post this Summary page from February 1 to April 30 of the year following the year covered by the form

Public reporting burden for this collection of information is estimated to average 58 minutes per response, including time to review the instruction, search and gather the data needed, and complete and review the collection of information. Persons are not required to respond to the collection of information unless it displays a currently valid OMB control number. If you have any comments about these estimates or any aspects of this data collection, contact: US Department of Labor, OSHA Office of Statistics, Room N-3644, 200 Constitution Ave, NW, Washington, DC 20210. Do not send the completed forms to this office.

OSHA's Form 300A (Rev. 01/2004)

Summary of Work-Related Injuries and Illnesses

Year 2024

U.S. Department of Labor
Occupational Safety and Health Administration

Form approved OMB no. 1218-0176

All establishments covered by Part 1904 must complete this Summary page, even if no injuries or illnesses occurred during the year. Remember to review the Log to verify that the entries are complete

Using the Log, count the individual entries you made for each category. Then write the totals below, making sure you've added the entries from every page of the log. If you had no cases write "0."

Employees former employees, and their representatives have the right to review the OSHA Form 300 in its entirety. They also have limited access to the OSHA Form 301 or its equivalent. See 29 CFR 1904.35, in OSHA's Recordkeeping rule, for further details on the access provisions for these forms.

Number of Cases

Total number of deaths	Total number of cases with days away from work	Total number of cases with job transfer or restriction	Total number of other recordable cases
0	0	0	0
(G)	(H)	(I)	(J)

Number of Days

Total number of days away from work	Total number of days of job transfer or restriction
0	0
(K)	(L)

Injury and Illness Types

Total number of...	(M)		
(1) Injury	0	(4) Poisoning	0
(2) Skin Disorder	0	(5) Hearing Loss	0
(3) Respiratory Condition	0	(6) All Other Illnesses	0

Establishment information

Your establishment name Pabon Engineering, Inc.

Street 13028 SW 128 Street

City Miami State FL Zip 33186

Industry description (e.g., Manufacture of motor truck trailers)
Underground Utilities and Excavation

Standard Industrial Classification (SIC), if known (e.g., SIC 3715)

OR North American Industrial Classification (NAICS), if known (e.g., 336212)
2 3 7 9 9 0

Employment information

Annual average number of employees 22

Total hours worked by all employees last year 49,664

Sign here

Knowingly falsifying this document may result in a fine.

I certify that I have examined this document and that to the best of my knowledge the entries are true, accurate, and complete.

Anibal Pabon
Company executive

President
Title

305-218-3547
Phone

1/30/2025
Date

Post this Summary page from February 1 to April 30 of the year following the year covered by the form

Public reporting burden for this collection of information is estimated to average 58 minutes per response, including time to review the instruction, search and gather the data needed, and complete and review the collection of information. Persons are not required to respond to the collection of information unless it displays a currently valid OMB control number. If you have any comments about these estimates or any aspects of this data collection, contact: US Department of Labor, OSHA Office of Statistics, Room N-3644, 200 Constitution Ave. NW, Washington, DC 20210. Do not send the completed forms to this office.

OSHA's Form 300A (Rev. 01/2004)

Summary of Work-Related Injuries and Illnesses

Year 2023

U.S. Department of Labor
Occupational Safety and Health Administration

Form approved OMB no. 1218-0176

All establishments covered by Part 1904 must complete this Summary page, even if no injuries or illnesses occurred during the year. Remember to review the Log to verify that the entries are complete

Using the Log, count the individual entries you made for each category. Then write the totals below, making sure you've added the entries from every page of the log. If you had no cases write "0."

Employees former employees, and their representatives have the right to review the OSHA Form 300 in its entirety. They also have limited access to the OSHA Form 301 or its equivalent. See 29 CFR 1904.35, in OSHA's Recordkeeping rule, for further details on the access provisions for these forms.

Number of Cases

Total number of deaths	Total number of cases with days away from work	Total number of cases with job transfer or restriction	Total number of other recordable cases
0	0	0	0
(G)	(H)	(I)	(J)

Number of Days

Total number of days away from work	Total number of days of job transfer or restriction
0	0
(K)	(L)

Injury and Illness Types

Total number of...	(M)		(M)
(1) Injury	0	(4) Poisoning	0
(2) Skin Disorder	0	(5) Hearing Loss	0
(3) Respiratory Condition	0	(6) All Other Illnesses	0

Post this Summary page from February 1 to April 30 of the year following the year covered by the form

Public reporting burden for this collection of information is estimated to average 58 minutes per response, including time to review the instruction, search and gather the data needed, and complete and review the collection of information. Persons are not required to respond to the collection of information unless it displays a currently valid OMB control number. If you have any comments about these estimates or any aspects of this data collection, contact: US Department of Labor, OSHA Office of Statistics, Room N-3644, 200 Constitution Ave, NW, Washington, DC 20210. Do not send the completed forms to this office.

Establishment information

Your establishment name Pabon Engineering, Inc.

Street 13028 SW 128 Street

City Miami State FL Zip 33186

Industry description (e.g., Manufacture of motor truck trailers)
Underground Utilities and Excavation

Standard Industrial Classification (SIC), if known (e.g., SIC 3715)

OR North American Industrial Classification (NAICS), if known (e.g., 336212)
2 3 7 9 9 0

Employment information

Annual average number of employees 22

Total hours worked by all employees last year 41,164

Sign here

Knowingly falsifying this document may result in a fine.

I certify that I have examined this document and that to the best of my knowledge the entries are true, accurate, and complete.

Anibal Pabon
Company executive

President
Title

305-218-3547
Phone

1/30/2024
Date

4.1:
BID FORM

The following Bid Form is presented to assist the Village in evaluating the bid. This Bid Form reflects estimated quantities for the Total Bid as described above. After award, the Village reserves the right to modify estimated quantities subject to the unit price and eliminate line items if necessary. Payment shall be made for the items listed on the Bid Form on the basis of the Work actually performed and completed.

Item No.	Description	Unit	Quantity	Unit Price	Total
1	Mobilization	LS	1	$ 29,800.00	$ 29,800.00
2	Maintenance of Traffic	LS	1	$ 15,000.00	$ 15,000.00
3	Storm Water Pollution Prevention Plan	LS	1	$ 2,000.00	$ 2,000.00
4	Site Restoration and Tie-In Grading	LS	1	$ 20,000.00	$ 20,000.00
5	Asphalt, SP-9.5, 1.5" Average Depth	SY	2200	$ 19.00	$ 41,800.00
6	Stabilized Subgrade, 12" Thick	SY	2200	$ 14.00	$ 30,800.00
7	Limerock Base, 8" Thick	SY	2200	$ 27.00	$ 59,400.00
8	Remove Existing Concrete, Asphalt, and Pavers	SY	930	$ 11.00	$ 10,230.00
9	ADA Accessible Catch Basin Grate	EA	1	$ 600.00	$ 600.00
10	Utility Fixture, Valve Assembly, Adjust/Modify	LS	1	$ 1,500.00	$ 1,500.00
11	Mailbox Relocation	EA	1	$ 250.00	$ 250.00
12	Sign Relocation	EA	2	$ 250.00	$ 500.00
13	Sign and Post	EA	6	$ 650.00	$ 3,900.00
14	Concrete Sidewalk (6" thick max) (Sidewalk, Driveway, and Apron)	SY	190	$ 85.00	$ 16,150.00
15	Paver Driveway Restoration	LS	1	$ 5,000.00	$ 5,000.00
16	Pavement Marking	LS	1	$ 62,000.00	$ 62,000.00
				GRAND TOTAL	$ 298,930.00

Refer to pay item notes within contract plans for details of costs to be included within items.

The following Bid Item Notes apply to the bid items:

1. Bid Item 1 is a lump sum pay item for all mobilization costs and includes the construction of two (2) project signs that shall be displayed at approaches to the project area. The intent is that the sign will be freestanding. The sign shall display on both sides the project name, Village Logo, elected officials, and contact information. A detail of the sign is included in the plans. Shop drawings must be submitted for approval prior to ordering the project sign. Photos of the actual project sign must be submitted for approval prior to installation of the project signs.

   Mobilization will be paid at the following rates:
   a. 10% of contract completion - 25% of Mobilization.
   b. 25% of contract completion - 50% of Mobilization.
   c. 50% of contract completion - 100% of Mobilization.

2. Bid Item 2 is a lump sum pay item for a Maintenance of Traffic (MOT) and includes all pedestrian access maintenance. All crosswalks and sidewalks shall remain open and free of obstructions. Temporary painting for roadways and crosswalks shall be maintained throughout the project. Costs shall include the use of flagmen. Contractor to prepare and submit for review a MOT Plan per phase of construction. The MOT plan shall be prepared by an FDOT certified individual. No work shall begin until the MOT plan has been approved by the Village.
3. Bid Item 3 to include a complete stormwater pollution prevention plan (SWPPP). Notice of Intent fees and compliance with any SWPPP reporting. Include furnishing, installation, maintenance, and removal of items. This is a lump sum pay item to furnish, install, maintain, and remove floating turbidity barriers.
4. Bid Item 4 is a lump sum pay item for site restoration which includes the complete restoration of the roadway or driveways impacted by any construction activity adjacent to the roadway resurfacing project including but not limited to mobilization, clearing, and grubbing, striping removal, milling and resurfacing, asphalt, limerock, and base removal, limerock rework, asphalt overlay, utility adjustments, mailbox relocations, etc. Any swale areas impacted by the contractor outside of those indicated on the plans will be restored by the contractor at no additional cost to the Village. The pay item includes but is not limited to sod, landscaping, trees, excavation, new fill, limerock base preparation, grading, tamping, irrigation, driveway aprons (asphalt, pavers, stamped concrete, etc.), sidewalks, mailboxes, fences, pipes, curbs, etc. to an equal or better condition prior to construction. The contractor shall include the costs associated with a preconstruction video to confirm existing conditions. Any damage not confirmed by preconstruction video will be repaired at no additional cost to the Village.
5. Bid Item 5 includes the asphalt final overlay to the extents shown on the plans or lift of asphalt (minimum 1.5") to final grade. Pavement overlay to provide smooth and continuous grading through the entire asphalt overlay process to avoid areas of standing water. This item also includes the final lift of asphalt over all trench restoration.
6. Bid Item 6 and 7 include all costs associated with the stabilized subgrade and limerock base.
7. Bid Item 8 includes all costs associated with removal and disposal of existing concrete, asphalt, and pavers and includes saw cutting.
8. Bid Items 9 includes all costs associated with the installation of ADA accessible catch basin grates.
9. Bid Item 10 includes all costs associated with valve adjustments.
10. Bid Item 11 includes all costs associated with the relocation of existing mailboxes as needed.
11. Bid Item 12 includes all costs associated with the relocation of existing signs.
12. Bid Item 13 includes all costs associated with new signs and their installation.
13. Bid Item 14 includes all costs associated with installing concrete pavements to include concrete sidewalks, driveways, and aprons up to 6" thick.
14. Bid Item 15 includes all costs associated with the restoration of paver driveways. Contractor is responsible of replacing pavers in the case that pavers break.
15. Bid Item 16 is a lump sum pay item for pavement marking which includes all costs associated with, thermoplastic pavement markings, including temporary pavement markings prior to thermoplastic, and reflective pavement markers (RPMs).

Total Bid Amount..... $ 298,930.00

Total Bid Amount (in words): Two Hundred Ninety Eight thousand Nine Hundred thirty Dollars and NO CENTS.

Signature of Official: _____

Name: Felix Valdes

Title: Secretary.

Company: V Engineering Corp.

Date: 2/5/2026

SECTION 8.0: Required Bid Submittal Forms

DRUG-FREE WORKPLACE CERTIFICATION

In order to have a drug-free workplace program, a business shall:

1) Publish a statement notifying employees that the unlawful manufacture, distribution, dispensing, possession, or use of a controlled substance is prohibited in the workplace and specifying the actions that will be taken against employees for violations of such prohibition.
2) Inform employees about the dangers of drug abuse in the workplace, the business' policy of maintaining a drug-free workplace, any available drug counseling, rehabilitation, and employee assistance programs, and the penalties that may be imposed upon employees for drug abuse violations.
3) Give each employee engaged in providing the commodities or contractual services that are under proposal a copy of the statement specified in Subsection (1).
4) In the statement specified in Subsection (1), notify the employees, that, as a condition of working of the commodities or contractual services that are under proposal, the employee will abide by the terms of the statement and will notify the employee of any conviction of, or plea of guilty or nolo contendere to, any violation of Chapter 893 or of any controlled substance law of the United States or any state, for a violation occurring in the workplace no later than five (5) days after such conviction.
5) Impose a sanction on, or require the satisfactory participation in a drug abuse assistance or rehabilitation program, if such is available in the employee's community, by any employee who is so convicted.
6) Make a good faith effort to continue to maintain a drug-free workplace through implementation of this section.

As the person authorized to sign the statement, I certify that this Company complies fully with the above requirements.

Signature of Official: _____

Name (typed): Felix Valdes

Title: Secretary

Company: V Engineering Corp.

Date: 2/5/2026

SUBCONTRACTOR LIST

The Company shall list all proposed Subcontractors to be used on this project if they are awarded the Contract.

Classification of Work	Subcontractor Name	Address	Telephone and Fax
Striping & Signage	Tri-County Pavement Markings	3905 Buchanan St. Hollywood, FL. 33021	786-412-5037 paul@tcmsi.net
Asphalt	H & J Asphalt	4310 NW 35 Ave. Miami, FL. 33142	305-634-3342 305-634-3313

ACKNOWLEDGEMENT, WARRANTY AND ACCEPTANCE

A. Company warrants that it is willing and able to comply with all applicable Village laws, rules and regulations.

B. Company warrants that they have read, understand and are willing to comply with all of the requirements of the ITB and the addendum/ addenda nos.

C. Company warrants that it will not delegate or sub-contract its responsibilities under an agreement without the prior written permission of the Council.

D. Company warrants that all information provided by it in connection with this bid is true and accurate.

E. CONTINGENCY FEE AND CODE OF ETHICS WARRANTY:

Company warrants that neither it, nor any principal, employee, agent, representative or family member has promised to pay, and Company has not, and will not, pay a fee for the amount of which is contingent upon the Village awarding this contract. Company warrants that neither it, nor any principal, employee, agent, representative has procured, or attempted to procure, this contract in violation of any of the provisions of the Village conflict of interest and code of ethics ordinances. Further, Company acknowledges that a violation of this warranty will result in the termination of the contract and forfeiture of funds paid, or to be paid, to the Company, if the Company is chosen for performance of the contract.

Signature of Official: _____

Name (typed): Felix Valdes

Title: Secretary.

Company: V Engineering Corp.

Date: 2/5/2026

NON-COLLUSIVE AFFIDAVIT

STATE OF FLORIDA }
} ss.:
COUNTY OF MIAMI-DADE }

Felix Valdes being first duly sworn, deposes and says that:

(1) He/she is the, (Owner, Partner, Officer, Representative or Agent) of: V Engineering Corp., the Company that has submitted the attached Bid;

(2) He/she is fully informed respecting the preparation and contents of the attached Bid and of all pertinent circumstances respecting such Bid;

(3) Such Bid is genuine and is not a collusive or a sham Bid;

(4) Neither the said Company nor any of its officers, partners, owners, agents, representatives, employees or parties in interest, including this affiant, have in any way colluded, conspired, connived or agreed, directly or indirectly, with any other Company or person to submit a collusive or sham response in connection with the work for which the attached bid has been submitted, or to refrain from responding in connection with such work, or have in any manner, directly or indirectly, sought by agreement or collusion, communication, or conference with any Company or person to fix this Bid or to secure through any collusion, conspiracy, connivance, or unlawful agreement, any advantage against the Village of Palmetto Bay, or any person interested in the proposed Work;

Signed, sealed and delivered
In the presence of

Signature of Official: F. Valdes

Name (typed): Felix Valdes

Title: Secretary

Company: V Engineering Corp.

Date: 2/5/2026

Continued Next Page

ACKNOWLEDGMENT

State of Florida)
) ss.:
County of Miami-Dade)

The foregoing instrument was acknowledged before me **by means of** ✓ **physical presence or** _ **online notarization**, this 5 day of February, 2026, by Felix Valdes. He/She was ✓ personally known, _____ or produced _____ as a form of identification.

WITNESS my hand and official seal

_____
NOTARY PUBLIC, STATE OF FLORIDA

Notary Public State of Florida
Felix R Clavelo Lopez
My Commission HH 320488
Expires 10/10/2026

SWORN STATEMENT PURSUANT TO SECTION 287.133 (3)(a) FLORIDA STATUES, ON PUBLIC ENTITY CRIMES

THIS FORM MUST BE SIGNED AND SWORN TO IN THE PRESENCE OF A NOTARY PUBLIC OR OTHER OFFICIAL AUTHORIZED TO ADMINISTER OATHS.

1. This sworn statement is submitted to the Village of Palmetto Bay, Florida

By Felix Valdes

For V Engineering Corp.

Whose business address is: 2525 Ponce de Leon Blvd. #349. Coral Gables, FL. 33134

And (if applicable) its Federal Employer Identification Number (FEIN) is: 87-3911074

2. I understand that a "public entity crime" as defined In Paragraph 287.133(1)(g), Florida Statutes ,and as may be amended means a violation of any state or federal law by a person with respect to and directly related to the transaction of business with any public entity or with any agency or political subdivision of any other State or of the United States, including, but not limited to, any Proposal or contract for goods or services to be provided to any public entity or an agency or any political subdivision of any other state or of the United Sates and involving antitrust fraud, theft, bribery, collusion, racketeering, conspiracy, or material misrepresentation

3. I understand that "convicted" or "conviction"" as defined in Paragraph 287.133(1)(b), Florida Statutes means a finding of guilt or a conviction of a public entity crime, with or without an adjudication of guilt, in any federal or state trial court of record relating to charges brought by indictment or information after July 1, 1989, as a result or a jury verdict, non-jury trial, or entry of a plea or guilty or nab contenders.

4. I understand that an "affiliate" as defined in Paragraph 287.133(1)(a), Florida Statutes, and means:

A. A predecessor or successor of a person convicted of a public entity crime; or
B. An entity under the control of any natural person who is active in the management of the entity and who has been convicted of a public entity crime. The term "affiliate"" includes those officers, directors, executives, partners, shareholders, employees, members, and agents who are active in the management of an affiliate. The ownership by one person of shares constituting a controlling Interest in another person, ore pooling of equipment or income among persons when not for fair market value under an arm's length agreement, shall be a prima facie case that one person controls another person. A person who knowingly enters

into a joint venture with a person who has been convicted of a public entity crime in Florida during the preceding 36 months shall be considered an affiliate.

5. I understand that a "person" as defined in Paragraph 287.133(1)(e), Florida Statutes, means any natural person or entity organized under the laws or any state or of the United States with the legal power to enter into a binding contract and which Bids or applies to Bids on contracts for the provision of goods or services let by a public entity, or which otherwise transacts or applies to transact business with a public entity. The term "person" includes those officers, directors, executives, partners, shareholders, employees, members, and agents who are active in management of any entity.

Signed, sealed and delivered in the presence:

Signature of Official: F. Valdes

Name (typed): Felix Valdes

Title: Secretary

Company: V Engineering Corp.

Date: 2/5/2026

ACKNOWLEDGMENT

State of Florida)
) ss.:
County of Miami-Dade)

The foregoing instrument was acknowledged before me **by means of** V **physical presence or** _ **online notarization**, this 5 day of February, 2026, by Felix Valdes. He/She was V personally known, _____ or produced _____ as a form of identification.

WITNESS my hand and official seal

NOTARY PUBLIC, STATE OF FLORIDA

Notary Public State of Florida
Felix R Clavelo Lopez
My Commission HH 320488
Expires 10/10/2026

AMERICANS WITH DISABILITIES ACT (ADA)
DISABILITY NONDISCRIMINATION STATEMENT

THIS FORM MUST BE SIGNED AND SWORN TO IN THE PRESENCE OF A NOTARY PUBLIC OR OTHER OFFICIAL AUTHORIZED TO ADMINISTER OATHS.

This sworn statement is submitted to the VILLAGE OF PALMETTO BAY, FLORIDA

by: Felix Valdes / Secretary
(print individual's name and title)

for: V Engineering Corp.
(print name of entity submitting sworn statement)

whose business address is: 2525 Ponce de Leon Blvd #349 Coral Gables, FL. 33134

and (if applicable) its Federal Employer Identification Number (FEIN) is: 87-3911074

I, being duly first sworn state: That the above named Company, corporation or organization is in compliance with and agreed to continue to comply with, and assure that any sub-contractor, or third party contractor under this project complies with all applicable requirements of the laws listed below including, but not limited to, those provisions pertaining to employment, provision of programs and services, transportation, communications, access to facilities, renovations, and new construction.

The American with Disabilities Act of 1990 (ADA), Pub. L. 101-336, 104 Stat 327, 42 USC 1210112213 and 47 USC Sections 225 and 661 including Title I, Employment; Title II, Public Services; Title III, Public Accommodations and Services Operated by Private entities; Title IV, Telecommunications; and Title V, Miscellaneous Provisions, and as any may be amended.

The Florida Americans with Disabilities Accessibility Implementation Act of 1993, Section 553.501-553.513, Florida Statutes:
The Rehabilitation Act of 1973, 229 USC Section 794;
The Federal Transit Act, as amended 49 USC Section 1612;
The Fair Housing Act as amended 42 USC Section 3601-3631.

Signature of Official: F. Valdes

Name (typed): Felix Valdes

Title: Secretary

Company: V Engineering Corp.

Date: 2/5/2026

Continued Next Page

ACKNOWLEDGMENT

State of Florida)
) ss.:
County of Miami-Dade)

The foregoing instrument was acknowledged before me **by means of** ✓ **physical presence or** _ **online notarization**, this 5 day of February, 2026, by Felix Valdes. He/She was ✓ personally known, _____ or produced _____ as a form of identification.

WITNESS my hand and official seal

_____
NOTARY PUBLIC, STATE OF FLORIDA

Notary Public State of Florida
Felix R Clavelo Lopez
My Commission HH 320488
Expires 10/10/2026

BUSINESS ENTITY AFFIDAVIT

Bidder or Company hereby recognizes and certifies that no elected official, or employee of the Village of Palmetto Bay (the "Village") shall have a financial interest directly or indirectly in this transaction or any compensation to be paid under or through this transaction, and further, that no Village employee, nor any elected or appointed officer (including Village board members) of the Village, nor any spouse, parent or child of such employee or elected or appointed officer of the Village, may be a partner, officer, director or proprietor of Bidder or Company, and further, that no such Village employee or elected or appointed officer, or the spouse, parent or child of any of them, alone or in combination, may have a material interest in the Company or Bidder. Material interest means direct or indirect ownership of more than five percent (5%) of the total assets or capital stock of the Company or Bidder. Any exception to these above-described restrictions must be expressly provided by applicable law or ordinance and be confirmed in writing by Village. Further, Bidder or Company recognizes that with respect to this transaction or bid, if any Bidder or Company violates or is a party to a violation of the ethics ordinances or rules of the Village, the provisions of Miami-Dade County Code Section 2-11.1, as applicable to Village, Village Charter Section 7.6 (Lobbyist), or the provisions of Chapter 112, part III, Fla. Stat., the Code of Ethics for Public Officers and Employees and as may be amended, such Bidder or Company may be disqualified from furnishing the goods or services for which the bid or proposal is submitted and may be further disqualified from submitting any future bids or proposals for goods or services to Village.

Accordingly, Bidder or Company completes and executes the Business Entity Affidavit form below. The terms "Bidder" or "Company," as used herein, include any person or entity making a bid proposal herein to Village or providing goods or services to Village.

I, Felix Valdes being first duly sworn state:

The full legal name and business address of the person(s) or entity contracting or transacting business with the Village of Palmetto Bay ("Village") are (Post Office addresses are not acceptable), as follows:

87-3911074
Federal Employer Identification Number (If none, Social Security Number)

V Engineering Corp.
Name of Entity, Individual, Partners or Corporation

Doing Business As (If same as above, leave blank)

2525 Ponce de Leon Blvd #349 Coral Gables, FL. 33134
Street Address Suite Village State Zip Code

Continued Next Page

OWNERSHIP DISCLOSURE AFFIDAVIT

1. If the contact or business transaction is with a corporation, the full legal name and business address shall be provided for each officer and director and each stockholder who holds directly or indirectly five percent (5%) or more of the corporation's stock. If the contract or business transaction is with a trust, the full legal name and address shall be provided for each trustee and each beneficiary. All such names and addresses are (Post Office addresses are not acceptable), as follows:

Full Legal Name	Address	Ownership
Felix G. Valdes	7545 SW 32 St. Miami, FL 33155	100 %
		%
		%

2. The full legal names and business address of any other individual (other than sub-contractors, material men, suppliers, laborers, or lenders) who have, or will have, any interest (legal, equitable, beneficial or otherwise) in the contract or business transaction with the Village are (Post Office addresses are not acceptable), as follows:

N/A

Signature of Official: _____

Name (typed): Felix Valdes

Title: Secretary.

Company: V Engineering Corp.

Date: 2/5/2026

Continued Next Page

ACKNOWLEDGMENT

State of Florida)
) ss.:
County of Miami-Dade)

The foregoing instrument was acknowledged before me **by means of** ✓ **physical presence or** _ **online notarization**, this 5 day of February, 2026, by Felix Valdes. He/She was ✓ personally known, _____ or produced _____ as a form of identification.

WITNESS my hand and official seal

Notary Public State of Florida
Felix R Clavelo Lopez
My Commission HH 320488
Expires 10/10/2026

_____
NOTARY PUBLIC, STATE OF FLORIDA

ACKNOWLEDGMENT OF CONFORMANCE WITH OSHA STANDARDS

To the Village of Palmetto Bay,

We V Engineering Corp. Bidder, Proposer, or Company, hereby acknowledge and agree that we, as the Prime Company for Village of Palmetto Bay, Village of Palmetto Bay _____, ITB# 2026-11-002, as specified, have the sole responsibility for compliance with all the requirements of the Federal Occupational Safety and Health Act of 1970 and as may be amended, and all State and local safety and health regulations, and agree to indemnify and hold harmless the Village of Palmetto Bay, against any and all liability, claims, damages losses and expenses they may incur due to the failure of : Tri-County Pavement Markings and HFJ Asphalt
(Sub-Contractor's Names) to comply with such act or regulation.

Signature of Official: _____

Name (typed): Felix Valdes

Title: Secretary

Company: V Engineering Corp.

Date: 2/5/2026

ACKNOWLEDGMENT

State of Florida)
) ss.:
County of Miami-Dade)

The foregoing instrument was acknowledged before me **by means of** ✓ **physical presence or** _ **online notarization**, this 5 day of February, 2026, by Felix Valdes. He/She was ✓ personally known, _____ or produced _____ as a form of identification.

WITNESS my hand and official seal

_____
NOTARY PUBLIC, STATE OF FLORIDA

Notary Public State of Florida
Felix R Clavelo Lopez
My Commission HH 320488
Expires 10/10/2026

VILLAGE OF PALMETTO BAY
ANTI-KICKBACK AFFIDAVIT

STATE OF FLORIDA)
) ss.:
COUNTY OF Miami-Dade)

I, the undersigned, hereby duly sworn, depose and say that no portion of the sum herein bid will be paid to any employees of the Village of Palmetto Bay, its elected officials, and _____ _____ or its employees, as a commission, kickback, reward or gift, directly or indirectly by me or any member of my Company or by an officer of the corporation.

Signature of Official: _____

Name (typed): Felix Valdes

Title: Secretary

Company: V Engineering Corp.

Date: 2/5/2026

ACKNOWLEDGMENT

State of Florida)
) ss.:
County of Miami-Dade)

The foregoing instrument was acknowledged before me **by means of** V **physical presence or** _ **online notarization**, this 5 day of February, 2026, by Felix Valdes. He/She was V personally known, _____ or produced _____ as a form of identification.

WITNESS my hand and official seal

_____
NOTARY PUBLIC, STATE OF FLORIDA

Notary Public State of Florida
Felix R Clavelo Lopez
My Commission HH 320488
Expires 10/10/2026

STATEMENT OF PAST CONTRACT DISQUALIFICATIONS

The Bidder, Proposer, or Company shall state whether it or any of its officers or employees who have a proprietary interest in it, has ever been disqualified, removed, or otherwise prevented from bidding on, or completing a federal, state, or local government project because of the violation of law, a safety regulation, or for any other reason, including but not limited to financial difficulties, project delays, or disputes regarding work or product quality, and if so to explain the circumstances.

Do you have any disqualification as described in the above paragraph to declare?

Yes or No, If yes, explain the circumstances.

NO

Executed on V Engineering Corp at 2525 Ponce de Leon Blvd Coral Gables, FL. 33134 under penalty of perjury of the laws of the State of Florida, that the foregoing is true and correct.

Signature of Official: F Valdes

Name (typed): Felix Valdes

Title: Secretary

Company: V Engineering Corp

Date: 2/5/2026

E-VERIFY AFFIDAVIT

STATE OF Florida

COUNTY OF Miami-Dade

I, Felix Valdes (the individual attesting below), being duly authorized by and on behalf of V Engineering Corp. (hereinafter "Employer") after first being duly sworn hereby swears or affirms as follows:

1. Employer understands that E-Verify is the federal E-Verify program operated by the United States Department of Homeland Security and other federal agencies, or any successor or equivalent program used to verify the work authorization of newly hired employees pursuant to federal law in accordance with NCGS §64-25(5), and as the same may be amended.
2. Employer understands that Employers Must Use E-Verify. Each employer, after hiring an employee to work in the United States, shall verify the work authorization of the employee through E-Verify in accordance with NCGS §64-26(a), and as the same may be amended.
3. Employer's subcontractors will comply with E-Verify, and Employer will ensure compliance with E-Verify by any and all subcontractors subsequently hired by Employer.

This 5th day of February, 2026

F Le Val

Signature of Affiant

Print or Type Name: Felix Valdes

State of Florida)
) ss.:
County of Miami-Dade)

The foregoing instrument was acknowledged before me **by means of** ✓ **physical presence or** _ **online notarization**, this 5 day of February, 2026, by Felix Valdes. He/She was ✓ personally known, _____ or produced _____ as a form of identification.

Signed and sworn to (or affirmed) before me,

this the 5 day of February, 2026.

My Commission Expires: 10/10/2026

_____

Notary Public

Notary Public State of Florida
Felix R Clavelo Lopez
My Commission HH 320488
Expires 10/10/2026

NHCS – E-Verify 081815

Foreign Country of Concern Attestation

Capitalized terms used herein have the definitions ascribed in section 287.138, F.S.

Name of Company is not owned by the government of a Foreign Country of Concern, is not organized under the laws of nor has its principal place of business in a Foreign Country of Concern, and the government of a Foreign Country of Concern does not have a Controlling Interest (twenty five percent (25%) or more) in the Company.

Under penalties of perjury, I declare that I have read the forgoing statement and that the facts stated in it are true.

Printed Name: Felix Valdes

Title: Secretary

Signature: F. Valdes Date: 2/5/2026

Affidavit Attesting to Noncoercive Conduct for Labor or Services

Nongovernment Entity name: V Engineering Corp. ("**Company**")
Vendor FEIN: 87-3911074
Address: 2525 Ponce de Leon Blvd #349
City: Coral Gables State: FL. Zip: 33134
Phone number: 305-342-5568 Email Address: felix@veccorp.net

As a nongovernmental entity executing, renewing, or extending a contract with a government entity, **Company** is required to provide an affidavit under penalty of perjury attesting that **Company** does not use coercion for labor or services in accordance with Section 787.06, Florida Statutes.

As defined in Section 787.06(2)(a), coercion means:

1. Using or threating to use physical force against any person;
2. Restraining, isolating, or confining or threating to restrain, isolate, or confine any person without lawful authority and against her or his will;
3. Using lending or other credit methods to establish a debt by any person when labor or services are pledged as a security for the debt, if the value of the labor or services as reasonably assessed is not applied toward the liquidation of the debt, the length and nature of the labor or service are not respectively limited and defined;
4. Destroying, concealing, removing, confiscating, withholding, or possessing any actual or purported passport, visa, or other immigration document, or any other actual or purported government identification document, of any person;
5. Causing or threating to cause financial harm to any person;
6. Enticing or luring any person by fraud or deceit; or
7. Providing a controlled substance as outlined in Schedule I or Schedule II of Section 893.03 to any person for the purpose of exploitation of that person.

As a person authorized to sign on behalf of the **Company**, I certify that the **Company** does not use coercion for labor or services in accordance with Section 787.06.

Written Declaration
Under penalties of perjury, I declare that I have read the foregoing Affidavit and that the facts stated in it are true.

Printed Name: Felix Valdes
Title: Secretary
Signature: F Valdes
Date: 2/5/2026

Form **W-9**
(Rev. October 2018)
Department of the Treasury
Internal Revenue Service

Request for Taxpayer Identification Number and Certification

▶ **Go to *www.irs.gov/FormW9* for instructions and the latest information.**

Give Form to the requester. Do not send to the IRS.

Print or type. See Specific Instructions on page 3.

1 Name (as shown on your income tax return). Name is required on this line; do not leave this line blank.
V ENGINEERING CORP.

2 Business name/disregarded entity name, if different from above

3 Check appropriate box for federal tax classification of the person whose name is entered on line 1. Check only **one** of the following seven boxes.

☐ Individual/sole proprietor or single-member LLC ☐ C Corporation ☑ S Corporation ☐ Partnership ☐ Trust/estate

☐ Limited liability company. Enter the tax classification (C=C corporation, S=S corporation, P=Partnership) ▶ _____

Note: Check the appropriate box in the line above for the tax classification of the single-member owner. Do not check LLC if the LLC is classified as a single-member LLC that is disregarded from the owner unless the owner of the LLC is another LLC that is not disregarded from the owner for U.S. federal tax purposes. Otherwise, a single-member LLC that is disregarded from the owner should check the appropriate box for the tax classification of its owner.

☐ Other (see instructions) ▶

4 Exemptions (codes apply only to certain entities, not individuals; see instructions on page 3):

Exempt payee code (if any) _____

Exemption from FATCA reporting code (if any) _____

(Applies to accounts maintained outside the U.S.)

5 Address (number, street, and apt. or suite no.) See instructions.
2525 PONCE DE LEON BLVD. SUITE 349

Requester's name and address (optional)

6 City, state, and ZIP code
CORAL GABLES, FL. 33134

7 List account number(s) here (optional)

Part I Taxpayer Identification Number (TIN)

Enter your TIN in the appropriate box. The TIN provided must match the name given on line 1 to avoid backup withholding. For individuals, this is generally your social security number (SSN). However, for a resident alien, sole proprietor, or disregarded entity, see the instructions for Part I, later. For other entities, it is your employer identification number (EIN). If you do not have a number, see *How to get a TIN*, later.

Note: If the account is in more than one name, see the instructions for line 1. Also see *What Name and Number To Give the Requester* for guidelines on whose number to enter.

Social security number
			–			–				

or

Employer identification number
8	7	–	3	9	1	1	0	7	4

Part II Certification

Under penalties of perjury, I certify that:

1. The number shown on this form is my correct taxpayer identification number (or I am waiting for a number to be issued to me); and
2. I am not subject to backup withholding because: (a) I am exempt from backup withholding, or (b) I have not been notified by the Internal Revenue Service (IRS) that I am subject to backup withholding as a result of a failure to report all interest or dividends, or (c) the IRS has notified me that I am no longer subject to backup withholding; and
3. I am a U.S. citizen or other U.S. person (defined below); and
4. The FATCA code(s) entered on this form (if any) indicating that I am exempt from FATCA reporting is correct.

Certification instructions. You must cross out item 2 above if you have been notified by the IRS that you are currently subject to backup withholding because you have failed to report all interest and dividends on your tax return. For real estate transactions, item 2 does not apply. For mortgage interest paid, acquisition or abandonment of secured property, cancellation of debt, contributions to an individual retirement arrangement (IRA), and generally, payments other than interest and dividends, you are not required to sign the certification, but you must provide your correct TIN. See the instructions for Part II, later.

Sign Here | **Signature of U.S. person ▶** [signature] **Date ▶** 11/10/2025

General Instructions

Section references are to the Internal Revenue Code unless otherwise noted.

Future developments. For the latest information about developments related to Form W-9 and its instructions, such as legislation enacted after they were published, go to *www.irs.gov/FormW9*.

Purpose of Form

An individual or entity (Form W-9 requester) who is required to file an information return with the IRS must obtain your correct taxpayer identification number (TIN) which may be your social security number (SSN), individual taxpayer identification number (ITIN), adoption taxpayer identification number (ATIN), or employer identification number (EIN), to report on an information return the amount paid to you, or other amount reportable on an information return. Examples of information returns include, but are not limited to, the following.

- Form 1099-INT (interest earned or paid)
- Form 1099-DIV (dividends, including those from stocks or mutual funds)
- Form 1099-MISC (various types of income, prizes, awards, or gross proceeds)
- Form 1099-B (stock or mutual fund sales and certain other transactions by brokers)
- Form 1099-S (proceeds from real estate transactions)
- Form 1099-K (merchant card and third party network transactions)
- Form 1098 (home mortgage interest), 1098-E (student loan interest), 1098-T (tuition)
- Form 1099-C (canceled debt)
- Form 1099-A (acquisition or abandonment of secured property)

Use Form W-9 only if you are a U.S. person (including a resident alien), to provide your correct TIN.

If you do not return Form W-9 to the requester with a TIN, you might be subject to backup withholding. See What is backup withholding, *later.*

BID BOND

KNOW ALL MEN BY THESE PRESENTS, that we, V Engineering Corp (hereinafter called the Principal), and Old Republic Surety Company (hereinafter called the Surety), a Corporation chartered and existing under the laws of the State of Wisconsin is authorized to do business in the State of Florida, and having an Agent resident therein, such Agent and Company acceptable to the Village of Palmetto Bay, are held and firmly bound unto the Village of Palmetto Bay (hereinafter called Village), in the sum of Five Percent of Amount Bid Dollars ($5% of Amount Bid), good and lawful money of the United States of America, to be paid upon demand of the said Village, to which payment well and truly to be made we bind ourselves, our heirs, executors, administrators, successors and assigns, jointly and severally and firmly by these presents.

WHEREAS; the above bounded Principal contemplates submitting or has submitted a Bid to the Village for furnishing all necessary labor, materials, equipment, machinery, tools, apparatus, services, all insurances and taxes, including but not limited to, state workmen's compensation and unemployment compensation insurance and taxes incurred in the performance of the Contract, and means of transportation for construction of:

VILLAGE OF PALMETTO BAY (the "Village")
SW 82nd Bike Lanes Improvements

for said Village, and;
WHEREAS; the Principal desires to file this Bond in accordance with law, in lieu of a certified Bidder's check otherwise required to accompany this Bid in the amount of five percent (5%) of the Base Bid.

NOW THEREFORE, the conditions of this obligation are such that, if the Bid be accepted, the Principal shall within ten (10) days after receipt of notification of the acceptance thereof, execute the Contract in accordance with the Invitation to Bid and Contact Documents and upon the terms, conditions and price set forth therein, in the form and manner required by the Village and execute sufficient and satisfactory Performance and Payment Bonds payable to the Village of Palmetto Bay, each in an amount of one hundred percent (100%) of the total Contract Price, as indicated in the Bid, in form and with security as set forth in the Invitation to Bid and Contract Documents satisfactory to the Village, then this obligation to be void, otherwise to be and remain in full force and virtue in law; and the Surety shall upon failure of the Principal to comply with any or all of the foregoing requirements within the time specified above immediately pay to the aforesaid Village upon demand the amount hereof in good and lawful money of the United States of America, not as a penalty but as liquidated damages.

IN WITNESS WHEREOF, THE said V Engineering Corp, as "Principal" herein has caused these presents to be signed in its name, by its _____ under its corporation seal, and the said Old Republic Surety Company as "Surety" herein, has caused these presents to be signed in its name by its Attorney-In-Fact, under its corporate seal, this 28th day of January, and attested by its Power of Attorney, A.D., 2026.

ATTEST:

Felix Claveb

V Engineering Corp

By: _____ (Title)
(Principal)

ATTEST: As per Attached Power of Attorney

Lisette Calderon

Dawn Auspitz

Old Republic Surety Company

By: Warren M. Alter
(Surety) Attorney-in-Fact

(Attorneys-in-Fact who sign this bond must file with it a certified copy of their power-of-Attorney to sign said Bond).

OLD REPUBLIC SURETY COMPANY

POWER OF ATTORNEY

KNOW ALL MEN BY THESE PRESENTS: That OLD REPUBLIC SURETY COMPANY, a Wisconsin stock insurance corporation, does make, constitute and appoint: WARREN M. ALTER, DAVID T. SATINE, JONATHAN A. BURSEVICH of MIAMI LAKES, FL

its true and lawful Attorney(s)-in-Fact, with full power and authority for and on behalf of the company as surety, to execute and deliver and affix the seal of the company thereto (if a seal is required), bonds, undertakings, recognizances or other written obligations in the nature thereof, ***(other than bail bonds, bank depository bonds, mortgage deficiency bonds, mortgage guaranty bonds, guarantees of installment paper and note guaranty bonds, self-insurance workers compensation bonds guaranteeing payment of benefits, or black lung bonds),*** as follows:

ALL WRITTEN INSTRUMENTS

and to bind OLD REPUBLIC SURETY COMPANY thereby, and all of the acts of said Attorneys-in-Fact, pursuant to these presents, are ratified and confirmed. This appointment is made under and by authority of the board of directors at a special meeting held on February 18, 1982.

This Power of Attorney is signed and sealed by facsimile under and by the authority of the following resolutions adopted by the board of directors of the OLD REPUBLIC SURETY COMPANY on February 18,1982.

RESOLVED that, the president, any vice-president or assistant vice president, in conjunction with the secretary or any assistant secretary, may appoint attorneys-in-fact or agents with authority as defined or limited in the instrument evidencing the appointment in each case, for and on behalf of the company to execute and deliver and affix the seal of the company to bonds, undertakings, recognizances, and suretyship obligations of all kinds; and said officers may remove any such attorney-in-fact or agent and revoke any Power of Attorney previously granted to such person.

RESOLVED FURTHER, that any bond, undertaking, recognizance, or suretyship obligation shall be valid and binding upon the Company

(i) when signed by the president, any vice president or assistant vice president, and attested and sealed (if a seal be required) by any secretary or assistant secretary; or

(ii) when signed by the president, any vice president or assistant vice president, secretary or assistant secretary, and countersigned and sealed (if a seal be required) by a duly authorized attorney-in-fact or agent; or

(iii) when duly executed and sealed (if a seal be required) by one or more attorneys-in-fact or agents pursuant to and within the limits of the authority evidenced by the Power of Attorney issued by the company to such person or persons.

RESOLVED FURTHER that the signature of any authorized officer and the seal of the company may be affixed by facsimile to any Power of Attorney or certification thereof authorizing the execution and delivery of any bond, undertaking, recognizance, or other suretyship obligations of the company; and such signature and seal when so used shall have the same force and effect as though manually affixed.

IN WITNESS WHEREOF, OLD REPUBLIC SURETY COMPANY has caused these presents to be signed by its proper officer, and its corporate seal to be affixed this 5th day of April, 2023.

OLD REPUBLIC SURETY COMPANY

Karen J. Haffner
Assistant Secretary

OLD REPUBLIC SURETY COMPANY CORPORATE SEAL 1981

Alan Pavlic
President

STATE OF WISCONSIN, COUNTY OF WAUKESHA - SS

On this 5th day of April, 2023, personally came before me, Alan Pavlic and Karen J Haffner, to me known to be the individuals and officers of the OLD REPUBLIC SURETY COMPANY who executed the above instrument, and they each acknowledged the execution of the same, and being by me duly sworn, did severally depose and say: that they are the said officers of the corporation aforesaid, and that the seal affixed to the above instrument is the seal of the corporation, and that said corporate seal and their signatures as such officers were duly affixed and subscribed to the said instrument by the authority of the board of directors of said corporation.

KATHRYN R. PEARSON NOTARY PUBLIC STATE OF WISCONSIN

Kathryn R. Pearson
Notary Public

My Commission Expires: September 28, 2026
(Expiration of notary's commission does not invalidate this instrument)

CERTIFICATE

I, the undersigned, assistant secretary of the OLD REPUBLIC SURETY COMPANY, a Wisconsin corporation, CERTIFY that the foregoing and attached Power of Attorney remains in full force and has not been revoked; and furthermore, that the Resolutions of the board of directors set forth in the Power of Attorney, are now in force.

OLD REPUBLIC SURETY COMPANY CORPORATE SEAL 1981

92-3000

Signed and sealed at the City of Brookfield, WI this 28th day of January, 2026.

Karen J. Haffner
Assistant Secretary

ORSC 22262 (3-06)

REFERENCES

Each bid must be accompanied by a list of at least ***three (3)*** references from current customers, preferably in the public sector, which shall include all the information requested below. **The Village should not be listed as one of the references provided.**

VILLAGE OF PALMETTO BAY - REFERENCE FORM

Solicitation Information: SW 82nd Bike Lanes Improvements
Invitation to Bid No. 2026-11-002

Name of Company: V Engineering Corp.

To Whom it May Concern,
The above reference vendor is submitting on a proposal solicitation or use of bid that has been issued by the Village of Palmetto Bay. We require that the consultant provide written references with their proposal submission and by providing you with this document the vendor is requesting that you provide the following reference information. We would appreciate you providing the information requested below as well as any other information you feel is pertinent:

Contracted Services Information: Construction of Traffic Circles

Scope of Work: Pavingge system installation, Asphalt, Concrete work, Striping & Signage and Landscaping

Initial Value of Contract: $829,328.74 Final Value of Contract: $693,069.90

Length of Contract: 120 Days

Would you enter into a contract with the Company in the future? ✓ Yes ____ No

Were the services provided acceptable and of quality standards: ✓ Yes ____ No

Was the Company responsive to your requests and resourceful with the task? ✓ Yes ____ No

Did the Company keep you fully informed of any updates and/or concerns related to the contracted services?
✓ Yes ____ No

If you responded no to any of the above please provide details:

Comments:

Name of Public Entity/Company: City of South Miami

Name of Individual completing this form: Patricia Torres

Signature: _____ Title: Construction and Design PM for publicworks and Capital Improvements

Telephone: 305-321-7460 Email: patricia.torres@somifl.gov

Thank you for your support in helping us evaluate our solicitation responses.

Sincerely,
Alessia Bencomo, Procurement Specialist

REFERENCES

Each bid must be accompanied by a list of at least ***three (3)*** references from current customers, preferably in the public sector, which shall include all the information requested below. **The Village should not be listed as one of the references provided.**

VILLAGE OF PALMETTO BAY - REFERENCE FORM

Solicitation Information: SW 82nd Bike Lanes Improvements
Invitation to Bid No. 2026-11-002

Name of Company: V Engineering Corp

To Whom it May Concern,
The above reference vendor is submitting on a proposal solicitation or use of bid that has been issued by the Village of Palmetto Bay. We require that the consultant provide written references with their proposal submission and by providing you with this document the vendor is requesting that you provide the following reference information. We would appreciate you providing the information requested below as well as any other information you feel is pertinent:

Contracted Services Information: 2022-017-R Seaboard Cargo Yard

Scope of Work: Sanitary Sewer Line Replacement, Asphalt, Limerock Base, Sub-base and Striping & Signage

Initial Value of Contract: $203,287.00 Final Value of Contract: $217,009.62

Length of Contract: 90 Days

Would you enter into a contract with the Company in the future? ✓ Yes ____ No

Were the services provided acceptable and of quality standards: ✓ Yes ____ No

Was the Company responsive to your requests and resourceful with the task? ✓ Yes ____ No

Did the Company keep you fully informed of any updates and/or concerns related to the contracted services?
✓ Yes ____ No

If you responded no to any of the above please provide details:

Comments:

This Contractor is working currently on another contract with the Port of Miami

Name of Public Entity/Company: Port of Miami - Miami Dade County / Seaport Dept.

Name of Individual completing this form: Mario Novoa

Signature: _____ Title: Construction Manager

Telephone: (305) 898 1727 cell Email: mario.novoa@miamidade.gov

Thank you for your support in helping us evaluate our solicitation responses.

Sincerely,
Alessia Bencomo, Procurement Specialist

MIAMI-DADE COUNTY, FLORIDA

Capital Improvements Information System

Port of Miami

Contractor Evaluation

MCC Contract: SP 2022-017-R
Contractor: V ENGINEERING CORP
Department Contact: Mario Novoa 305-347-4885

Evaluation Type: Standard Evaluation
FEIN: 873911074
Award Amount: $207,973.66

Site Project Name: 2022-017 SEABORARD MAIN SEWR LINE REPLACEMENT
Site Location: SEABOARD MARINE -PORT MIAMI

Evaluator ID: mnovoa Date: 11/26/2024 Period: Project conclusion or closeout

	Rating *					
	4	3	2	1	N/A	Criteria
1-	✔					Schedule - Quality of schedule & adherence to schedule resulting in timeliness and minimizing delay to the owner and community.
2-	✔					Cost effectiveness & efficiency - Budget compliance & value of work.
3-	✔					Vision - Design - Concepts or adherence to criteria.
4-	✔					Cooperation - Teamwork & relationship with owner, subs and suppliers.
5-	✔					Coordination - Ability to organize, schedule and complete tasks in adherence to the schedule.
6-	✔					Accuracy & Technical Skills - Cost estimating, scheduling, shop and other drawings, plans, manuals, project documentation and conflict resolution.
7-	✔					Completeness - Compliance with contract documents, permits, Codes & standards.
8-	✔					Responsiveness - Timely, clear & concise responses to owner comments and correspondence.
9-	✔					Commitment - Intangibles & contribution to project success.
10-	✔					Personnel - Quality and dedication of project staff.
11-	✔					Management - Leadership ability.
12-	✔					Quality - Work performed correctly the first time.

Overall Performance Average: 4.0

Documentation that supports this evaluation and Contractor's/Consultant's comments can be obtained by contacting:

✓ Mario Novoa at Phone# 305 898 1727

Evaluation Reviewed by: Supervisor ☑ Division Chief ☐ Assistant Director ☐ Director ☐

Reviewer Name: Eddy Etienne / M. NOVOA. Reviewer Signature: Mnovoa, CM 2.

The method of delivery of this evaluation to contractor/consultant: Certified Mail ☐ EMail ☐ Fax ☑ Hand ☐

(Unresponsive Performance by contractor/consultant requires 2 delivery methods, one MUST be Certified Mail.)

Evaluation delivered to: V- ENGINEERING -FELIX CLAVELO

* Rating Key

4 Superior performance - Exemplary quality, no intervention required - project completed on time or early at or below budget with no change orders or amendments other than owner requested changes.

3 Satisfactory performance - Minor errors noted, addressed with timely corrective action. No serious errors noted or corrective action needed.

2 Guarded performance Errors and Omissions documented in writing with timely corrective action.

1 Unresponsive performance documented in writing without timely corrective action.

N/A. No Information

REFERENCES

Each bid must be accompanied by a list of at least ***three (3)*** references from current customers, preferably in the public sector, which shall include all the information requested below. **The Village should not be listed as one of the references provided.**

VILLAGE OF PALMETTO BAY - REFERENCE FORM

Solicitation Information: SW 82nd Bike Lanes Improvements
Invitation to Bid No. 2026-11-002

Name of Company: V Engineering Corp

To Whom it May Concern,

The above reference vendor is submitting on a proposal solicitation or use of bid that has been issued by the Village of Palmetto Bay. We require that the consultant provide written references with their proposal submission and by providing you with this document the vendor is requesting that you provide the following reference information. We would appreciate you providing the information requested below as well as any other information you feel is pertinent:

Contracted Services Information: Mary Brickell Village

Scope of Work: Demolition, Earthwork, Concrete work, asphalt milling and Resurfacing, striping and signage

Initial Value of Contract: $780,000.00 Final Value of Contract: $629,429.00

Length of Contract: 180 Days

Would you enter into a contract with the Company in the future? ✓ Yes _____ No

Were the services provided acceptable and of quality standards: ✓ Yes _____ No

Was the Company responsive to your requests and resourceful with the task? ✓ Yes _____ No

Did the Company keep you fully informed of any updates and/or concerns related to the contracted services?

✓ Yes _____ No

If you responded no to any of the above please provide details:

Comments:

Name of Public Entity/Company: Winman Construction, Inc

Name of Individual completing this form: Sinclair Cerber

Signature: [signature] Title: Senior Project Manager

Telephone: 305.773.5329 Email: _____

Thank you for your support in helping us evaluate our solicitation responses.

Sincerely,
Alessia Bencomo, Procurement Specialist

MIAMI-DADE COUNTY, FLORIDA

Capital Improvements Information System

Fire Rescue

Contractor Evaluation

MCC Contract: FR MDFRD-848-HQ-A
Contractor: V ENGINEERING CORP
Department Contact: Alfredo Garmendia (786) 331-4506
Site Project Name: Headquarters Training Site Infill Area and Asphalt
Site Location: MDFRD HEADQUARTERS BUILDING 9300 NW 41 ST DORAL FL

Evaluation Type: Standard Evaluation
FEIN: 873911074
Award Amount: $430,784.50

Evaluator ID: alfgarm Date: 8/28/2025 Period: Project conclusion or closeout

Rating *						
	4	3	2	1	N/A	Criteria
1-	✓					Schedule - Quality of schedule & adherence to schedule resulting in timeliness and minimizing delay to the owner and community.
2-	✓					Cost effectiveness & efficiency - Budget compliance & value of work.
3-	✓					Vision - Design - Concepts or adherence to criteria.
4-	✓					Cooperation - Teamwork & relationship with owner, subs and suppliers.
5-	✓					Coordination - Ability to organize, schedule and complete tasks in adherence to the schedule.
6-	✓					Accuracy & Technical Skills - Cost estimating, scheduling, shop and other drawings, plans, manuals, project documentation and conflict resolution.
7-	✓					Completeness - Compliance with contract documents, permits, Codes & standards.
8-	✓					Responsiveness - Timely, clear & concise responses to owner comments and correspondence.
9-	✓					Commitment - Intangibles & contribution to project success.
10-	✓					Personnel - Quality and dedication of project staff.
11-	✓					Management - Leadership ability.
12-	✓					Quality - Work performed correctly the first time.

Overall Performance Average: 4.0

Documentation that supports this evaluation and Contractor's/Consultant's comments can be obtained by contacting:
Alfredo Garmendia at Phone# 786-498-8635

Evaluation Reviewed by: Supervisor ☑ Division Chief ☐ Assistant Director ☐ Director ☐
Reviewer Name: Edward Villareal Reviewer Signature: _____
The method of delivery of this evaluation to contractor/consultant: Certified Mail ☐ EMail ☐ Fax ☑ Hand ☐
(Unresponsive Performance by contractor/consultant requires 2 delivery methods, one MUST be Certified Mail.)
Evaluation delivered to:

* Rating Key

4 Superior performance - Exemplary quality, no intervention required - project completed on time or early at or below budget with no change orders or amendments other than owner requested changes.

3 Satisfactory performance - Minor errors noted, addressed with timely corrective action. No serious errors noted or corrective action needed.

2 Guarded performance Errors and Omissions documented in writing with timely corrective action.

1 Unresponsive performance documented in writing without timely corrective action.

N/A. No Information

AGENDA ITEM NO. 12.G

Item Cover Page

REGULAR COUNCIL AGENDA ITEM REPORT

DATE:	March 2, 2026
SUBMITTED BY:	Javier Gonzalez, Community and Economic Development
ITEM TYPE:	Resolution
AGENDA SECTION:	CONSENT AGENDA
SUBJECT:	A RESOLUTION OF THE MAYOR AND VILLAGE COUNCIL OF THE VILLAGE OF PALMETTO BAY, FLORIDA, REGARDING THE PROCUREMENT OF BUS STOP AMENITIES AND MONUMENT ENTRANCE SIGNS AS PART OF THE VILLAGE-WIDE BRANDING IMPLEMENTATION; AUTHORIZING THE VILLAGE MANAGER TO ENTER INTO A CONTRACT WITH REP SERVICES, INC., PIGGY-BACKING OFF A CLAY COUNTY, FLORIDA CONTRACT, FOR THE PURCHASE OF BUS STOP AMENITIES; AUTHORIZING THE VILLAGE MANAGER TO ENTER INTO A CONTRACT AND INSTALLATION AGREEMENT WITH GARDNER SIGNS, LLC (D/B/A FERRIN SIGNS), FOR THE FABRICATION, PERMITTING, AND INSTALLATION OF TWO (2) MONUMENT ENTRANCE SIGNS; AUTHORIZING TOTAL EXPENDITURES IN AN AMOUNT NOT TO EXCEED ONE HUNDRED SEVENTEEN THOUSAND, EIGHT HUNDRED THIRTY-FOUR DOLLARS AND SIXTY CENTS ($117,834.60) PLUS APPLICABLE PERMIT COSTS; AND PROVIDING AN EFFECTIVE DATE. *(Sponsored by Administration and Prepared by Parks & Recreation Director, Fanny Carmona and Planning & Zoning Director, Javier Gonzalez)*

SUGGESTED ACTION:

ATTACHMENTS:

Resolution - Branding_Implementation_Gardner_RepServices..docx
Memo - Branding Implementation (Gardner & Rep Services).doc
Exhibit A - Technical Design Specifications.pdf
Exhibit B - Gardner Signs Proposal.pdf
Exhibit C - Installation Agreement.pdf
Exhibit D - Before & After Bust Stop Amenities.pdf
Exhibit E - Rep Services Proposal.pdf
Exhibit F - Clay County Contract.pdf

RESOLUTION NO. 2026-_____

A RESOLUTION OF THE MAYOR AND VILLAGE COUNCIL OF THE VILLAGE OF PALMETTO BAY, FLORIDA, REGARDING THE PROCUREMENT OF BUS STOP AMENITIES AND MONUMENT ENTRANCE SIGNS AS PART OF THE VILLAGE-WIDE BRANDING IMPLEMENTATION; AUTHORIZING THE VILLAGE MANAGER TO ENTER INTO A CONTRACT WITH REP SERVICES, INC., PIGGY-BACKING OFF A CLAY COUNTY, FLORIDA CONTRACT, FOR THE PURCHASE OF BUS STOP AMENITIES; AUTHORIZING THE VILLAGE MANAGER TO ENTER INTO A CONTRACT AND INSTALLATION AGREEMENT WITH GARDNER SIGNS, LLC (D/B/A FERRIN SIGNS), FOR THE FABRICATION, PERMITTING, AND INSTALLATION OF TWO (2) MONUMENT ENTRANCE SIGNS; AUTHORIZING TOTAL EXPENDITURES IN AN AMOUNT NOT TO EXCEED ONE HUNDRED SEVENTEEN THOUSAND, EIGHT HUNDRED THIRTY-FOUR DOLLARS AND SIXTY CENTS ($117,834.60) PLUS APPLICABLE PERMIT COSTS; AND PROVIDING AN EFFECTIVE DATE. *(Sponsored by Administration and Prepared by Fanny Carmona, Parks & Recreation Director and Javier Gonzalez, Planning & Zoning Director)*

WHEREAS, the Village has adopted a new Village-wide branding intended to create a consistent and recognizable visual identity throughout public spaces; and

WHEREAS, the Mayor and Village Council allocated One Hundred Fifty Thousand Dollars ($150,000.00) for Village-wide branding implementation via Ordinance No. 2024-06, which approved and adopted the Village budget for Fiscal Year 2024-2025; and

WHEREAS, the replacement of existing bus stop amenities and the establishment of entrance features at key gateways provide an opportunity to begin implementation of this new branding in highly visible

locations, elevating the Village's visual image and fostering community pride; and

WHEREAS, regarding the bus stop amenities, the Village is in receipt of a proposal from Rep Services, Inc., for the purchase of seven benches and seven trash receptacles incorporating the new branding, at a cost of forty-three thousand, one hundred ninety-seven dollars and sixty cents ($43,197.60); and

WHEREAS, Section 2-175(i)(3) of the Village Code allows for the awarding of a contract without sealed bidding by piggy-backing off a valid contract by another governmental entity, and the proposal from Rep Services, Inc. utilizes Clay County, Florida Contract # 23/24-074; and

WHEREAS, regarding the entrance signs, the Village is in receipt of a proposal from Gardner Signs, LLC (d/b/a Ferrin Signs) ("Gardner"), for the permitting, fabrication, and installation of two (2) monument entrance features incorporating the new branding and night-mode lighting, at a cost of seventy-four thousand, six hundred thirty-seven dollars ($74,637.00); and

WHEREAS, the Village Council finds that time is of the essence in installing these entrance features, and because Gardner is already providing virtually identical signs elsewhere in the Village, they can perform the work more expeditiously and economically than through a competitive bidding process; and

WHEREAS, pursuant to Section 2-175(i)(2) of the Village Code, the Village Manager has determined that a waiver of sealed bidding is appropriate as competitive bidding is impracticable under these circumstances and the purchase meets all technical requirements to implement the Village's visual branding standards; and

WHEREAS, the Village Council finds that the approval of this resolution to implement these branding initiatives is a strategic investment in the community's identity and is in the best interest of the Village and its residents.

NOW, THEREFORE, BE IT RESOLVED BY THE VILLAGE OF PALMETTO BAY, FLORIDA, THAT:

Section 1. The Village Council hereby accepts and approves the proposal from Rep Services, Inc. for the purchase of seven benches and seven trash receptacles at a total cost of forty-three thousand, one hundred ninety-seven dollars and sixty cents ($43,197.60), and authorizes the piggy-backing of Clay County, Florida Contract # 23/24-074 for this procurement.

Section 2. The Village Manager is hereby authorized to execute a contract with Rep Services, Inc., and issue a purchase order not to exceed forty-three thousand, one hundred ninety-seven dollars and sixty cents ($43,197.60), with 100% funding from the Fiscal Year 2025-2026 Capital Improvement Fund.

Section 3. The Village Council hereby accepts and approves the proposal from Gardner Signs, LLC (d/b/a Ferrin Signs) for the permitting, fabrication, and installation of two (2) monument entrance signs at a total cost of seventy-four thousand, six hundred thirty-seven dollars ($74,637.00) plus permit costs, and authorizes this award in accordance with Section 2-175(i)(2) of the Village Code.

Section 4. The Village Manager is hereby authorized to execute a contract and Installation Overview Agreement with Gardner, and issue a purchase order not to exceed seventy-four thousand, six hundred thirty-seven dollars ($74,637.00) plus applicable permit costs, with 100% funding from the Fiscal Year 2025-2026 Capital Improvement Fund.

Section 5. This resolution shall take effect immediately upon its adoption.

PASSED and **ADOPTED** this 2nd day of March 2026.

Attest:

_____ _____
Missy Arocha Karyn Cunningham
Village Clerk Mayor

APPROVED AS TO FORM AND LEGAL SUFFICIENCY
FOR THE SOLE USE AND BENEFIT OF THE VILLAGE:

_____
John J. Quick
Village Attorney

FINAL VOTE AT ADOPTION:

Council Member Patrick Fiore _____

Council Member Steve Cody _____

Council Member Marsha Matson _____

Vice-Mayor Mark Merwitzer _____

Mayor Karyn Cunningham _____

To: Honorable Mayor and Village Council

Date: March 2, 2026

From: Nick Marano, Village Manager

Re: Purchase of Monument Entrance Features & Bus Stop Amenities

A RESOLUTION OF THE MAYOR AND VILLAGE COUNCIL OF THE VILLAGE OF PALMETTO BAY, FLORIDA, REGARDING THE PROCUREMENT OF BUS STOP AMENITIES AND MONUMENT ENTRANCE SIGNS AS PART OF THE VILLAGE-WIDE BRANDING IMPLEMENTATION; AUTHORIZING THE VILLAGE MANAGER TO ENTER INTO A CONTRACT WITH REP SERVICES, INC., PIGGY-BACKING OFF A CLAY COUNTY, FLORIDA CONTRACT, FOR THE PURCHASE OF BUS STOP AMENITIES; AUTHORIZING THE VILLAGE MANAGER TO ENTER INTO A CONTRACT AND INSTALLATION AGREEMENT WITH GARDNER SIGNS, LLC (D/B/A FERRIN SIGNS), FOR THE FABRICATION, PERMITTING, AND INSTALLATION OF TWO (2) MONUMENT ENTRANCE SIGNS; AUTHORIZING TOTAL EXPENDITURES IN AN AMOUNT NOT TO EXCEED ONE HUNDRED SEVENTEEN THOUSAND, EIGHT HUNDRED THIRTY-FOUR DOLLARS AND SIXTY CENTS ($117,834.60) PLUS APPLICABLE PERMIT COSTS; AND PROVIDING AN EFFECTIVE DATE. *(Sponsored by Administration and Prepared by Fanny Carmona, Parks & Recreation Director and Javier Gonzalez, Planning & Zoning Director)*

BACKGROUND AND ANALYSIS:

The Village has adopted a new Village-wide branding intended to create a consistent and recognizable visual identity throughout public spaces. The establishment of entrance features at key gateways and the modernization of bus stop amenities serve as a primary public benefit by elevating the Village's visual image and fostering community pride. By combining these efforts, the Village ensures an effective roll-out of its new aesthetic standards across the community.

I. Monument Entrance Features (Gardner Signs, LLC)

The Village is in receipt of a proposal from Gardner Signs, LLC (d/b/a Ferrin Signs) (“Gardner”), for the permitting, fabrication, and installation of two (2) monument entrance signs to be located at 13797 US-1 and 18323 US-1. These features are designed with high-quality coral stone veneer, the "Village of Parks" tagline, and integrated night-mode lighting to ensure a premium gateway aesthetic.

Time is of the essence regarding these monument entrance signs. Gardner is currently providing virtually identical monument signs at other locations within the Village. Consequently, Gardner can manufacture, assemble, and install these specific signs more expeditiously and economically than if the Village were to initiate a new competitive bidding process. Pursuant to Section 2-175(i)(2) of the Village Code, a waiver of sealed bidding is appropriate as competitive bidding is impracticable under these circumstances.

II. Bus Stop Amenities (Rep Services, Inc.)

Simultaneously, the Village is implementing its new branding at highly visible bus stop locations by modernizing outdated street furniture and replacing aged, non-standardized benches. The Village is in receipt of a proposal from Rep Services, Inc., for the purchase of seven (7) benches and seven (7) trash receptacles. This purchase utilizes the Clay County, Florida Contract (RFP #23/24-074), allowing the Village to "piggy-back" off a competitively bid contract pursuant to Section 2-175(i)(3) of the Village Code.

Pursuant to the Village Code of Ordinances, the Village Manager has determined that the following procurement methods are in the best interest of the Village:

1. Waiver of Competitive Bidding (Section 2-175(i)(2)): Regarding Gardner Signs, LLC, the Village Manager has determined that a waiver of sealed bidding is appropriate as competitive bidding is impracticable. Because Gardner is currently providing identical monument signs elsewhere in the Village, they can manufacture and install these specific signs more expeditiously and economically than a new bidder. Time is of the essence to ensure branding consistency.

2. Piggy-backing (Section 2-175(i)(3)): Regarding Rep Services, Inc., the Village Manager is authorized to award this contract without sealed bidding as the supplier has a valid contract through a competitive process by another governmental entity (Clay County, Florida Contract RFP #23/24-074).

FISCAL/BUDGETARY IMPACT:
The Mayor and Village Council previously allocated One Hundred Fifty Thousand Dollars ($150,000.00) for Village-wide branding implementation via Ordinance No. 2024-06, which adopted the Village budget for Fiscal Year 2024-2025.

The total project cost for the combined branding implementation is $117,834.60 (plus applicable permit costs for the signage), which remains $32,165.40 under the original budget allocation.

- Gardner Signs (Monuments): $74,637.00
- Rep Services (Amenities): $43,197.60
- Funding Source: 100% 2025-2026 Capital Improvement Funds.

RECOMMENDATION:
Approval is recommended.

Attachments:
- Exhibit A: Technical Design Specifications (Sign)
- Exhibit B: Proposal from Gardner Signs, LLC (File #0226021)
- Exhibit C: Gardner Signs, LLC (Installation Agreement)
- Exhibit D: Before & After Comparison (Bus Stop Amenities)
- Exhibit E: Proposal from Rep Services, Inc.
- Exhibit F: Clay County Award Documentation (RFP #23/24-074)

VILLAGE OF PALMETTO BAY

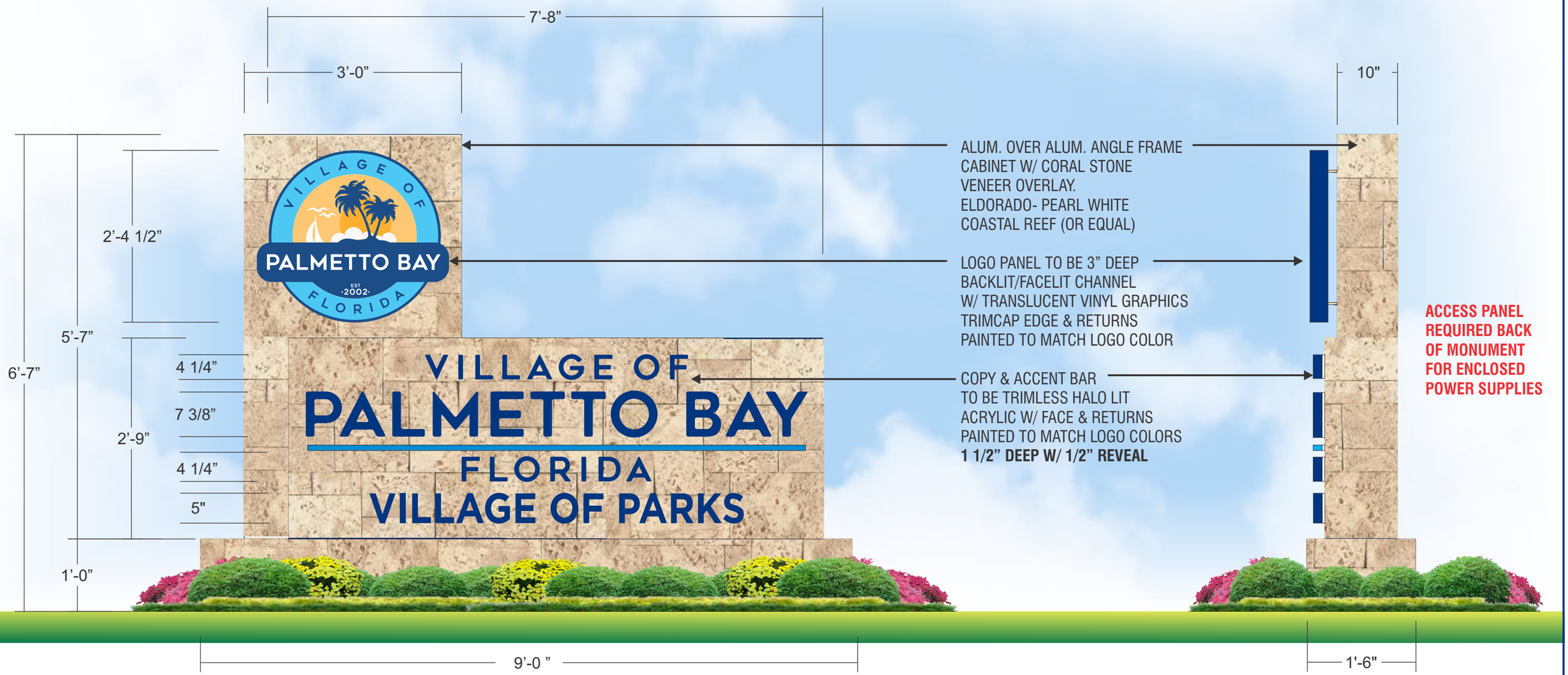

S/F MONUMENT SIGN ELEVATION **SCALE: 3/4"=1'-0"**

QTY (2) REQ'D

FERRIN SIGNS

Flamingo SIGNS

Divisions of Gardner signs

945 26th St,
West Palm Beach, FL 33407
561.802.4242

FLORIDA
4444 SE Commerce
Stuart, FL 34997
772.220.7377

MICHIGAN
1087 Naughton Dr
Troy, MI 48083
248.689-9100

OHIO
3800 Airport Hwy
Toledo, OH 43615
419.385.6669

www.ferrinsigns.com

JOB INFORMATION		DESIGN INFORMATION	
CLIENT:	VILLAGE OF PALMETTO BAY	**SCALE:**	AS NOTED
PROJECT:	S/F MONUMENT SIGN	**DESIGNER:**	C. COOPER
LOCATION:	PALMETTO BAY	**DATE:**	2/6/26
		REVISIONS:	
COUNTY:			
SALESPERSON:	R. SIMS	**FILE:**	#0226021 VILLAGE OF PALMETTO PARK

CLIENT AUTHORIZATION

SIGNED BY: **DATE:**

COLOR SPECIFICATIONS

PMS #288C

PMS #298C

NOTE: ALL ELECTRICAL WORK COMPLIES WITH NEC 2020

All electrical components are U.L Listed. Sign grounding & bonding as per NEC 2020 - 600.7
Min. 20 Amp disconnect switch per NEC 600.7
Min. 1/2" conduit, Astronomical Time Clock per FBC 405.2.2.1 & Conforms to the requirements of the 8th Edition of FBC 2023 Section 1620 HVHZ & 3107
Ultimate Design Wind = 180 MPH
Risk Catergory = III Exposure

DESIGN AND COLOR RENDERING COPYRIGHT ©2023 BY GARDNER SIGNS, INC. SUBMITTED FOR YOUR USE WITH THIS DESIGN PROJECT. IT IS NOT TO BE TRANSMITTED, USED, COPIED, ALTERED OR EXHIBITED IN ANY FASHION WHATSOEVER. ALL OR ANY PART OF THIS DESIGN (EXCEPT REGISTERED TRADEMARKS) REMAINS THE EXCLUSIVE PROPERTY OF GARDNER SIGNS, INC.

FERRIN SIGNS

Flamingo SIGNS Stuart, FL

Divisions of Gardner signs Troy, MI • Toledo, OH

945 26th St., West Palm Beach, FL
561.802.4242

Proposal

Date
2/12/2026

Name / Address	Ship To
Village of Palmetto Bay 9705 East Hibiscus Street Palmetto Bay, FL 33157	Village of Palmetto Bay 13797 US 1 - 1st location 18323 US 1 - 2nd location Palmetto Bay, FL 33157

Customer Contact	Customer Phone	Customer E-mail	Rep
Javier Gonzalez	305-259-1276	jgonzalez@palmettobay-fl.gov	Ryan

Description		Total
In response to your request, we are please to submit the following proposal:		
Manufacture (2) single face monument signs as per design #0226021		$ 53,834.00
Installation of (2) monument signs in different locations - new footers included. No removals are included Install letters on 2nd trip after coral is installed		$ 21,146.00
MOT permit		$ 5,000.00
Site survey for both monument signs		$ 1,200.00
Note: Project is quoted as fabricate and install both monuments at the same time If project changes to one fab and install one monument price change will be required		
Permit to be billed at cost on final invoice		
Permit acquisition fee		$ 350.00
Permit Engineering fee monument ($500.00for each sign)		$ 1,000.00
Final Inspection Fee		$ 400.00
Multi Sign Discount		$ (8,293.00)
Customer Deposit: $37,318.50		
We sincerely hope this proposal meets with your approval and that we may be favored with your order.		
Approval Signature: Date		

All prices are subject to applicable sales tax.
Prices may be good for only 30 days due to market conditions.
50% advanced deposit due at signing. Balance due upon completion of project.
If installation is delayed by client, project will be due in full, less install cost, upon shop completion.
Electrical service must be accessible within 5' of hook up on day of install or add'l trip fees will be incurred.
Gardner Signs, LLC retains all rights of ownership until project is paid in full.

	Subtotal	**$ 74,637.00**
	6.5% Sales Tax	
Mail to: **945 26th St, West Palm Beach, FL 33407** **or call for ACH info 561-802-4242**	**Total**	**$ 74,637.00**

We Accept: VISA mastercard AMERICAN EXPRESS
There will be a 3% Convenience Fee added to all credit card payments.

FERRIN SIGNS
945 26th St., West Palm Beach, FL
561.802.4242
Flamingo SIGNS
Stuart, FL
Divisions of Gardner signs
Troy, MI • Toledo, OH

Installation Overview Agreement

Customer Name: Village of Palmetto Bay c/o Javier Gonzalez

Address: 13797 US 1 and 18323 US 1 Palmetto Bay

(2) Free standing signs

Initials

1. **Public Utilities** – Ferrin Signs will call in underground locates for all major utilities (Electric, Water, Gas, Fiber Optics) _____

2. **Private Utilities** – There are some underground utilities/private utilities that are your responsibility to identify. The locators for Public Utilities do NOT mark these. Prior to installation of your sign, it is important for you to Mark the ground for all non-public utilities. These utilities include, but are not limited to: _____
   a. Sprinkler heads and underground irrigation lines
   b. Underground water lines that feed a swimming pool, fountain or other structure.
   c. Underground electric lines that might supply power to walkway lighting, street Lights, lamp posts, landscape lighting, etc.
   d. Any private gas lines or sewer lines that feed off the public utility lines onto your Property
   e. Any other non-public utilities

3. **Sign location** – It is your responsibility to mark the location of your sign. This can be done with your sales representative prior to installation. _____

4. **Landscaping clearance prior to installation** – To provide room for proper installation of your sign, all vegetation must be cleared out 2' of all sides of the sign location. _____

5. **New Primary Power** – Primary power for your sign needs to run to the new sign location by a licensed electrician under a separate permit. This power needs to be in place prior to the sign installation or you will be billed an additional trip charge to make connection. As per NEC, you are required to have a battery backup time clock and a dedicated circuit for your sign. _____

6. **Existing Primary Power –** If the power for your signs is existing, it needs to be in Proper working order prior to your sign installation. If the power needs to be repaired After your sign is installed and requires a return trip, you will be billed an additional Trip charge. As per NEC, you are required to have a battery backup time clock and a dedicated circuit for your sign. _____

FERRIN SIGNS
945 26th St., West Palm Beach, FL
561.802.4242
Flamingo SIGNS
Stuart, FL
Divisions of Gardner signs
Troy, MI • Toledo, OH

7. **Landscape requirements for new signs** – Many municipalities have landscape/ Irrigation requirements for signs. Your sales representative can provide you with These requirements. You must install any required landscaping within 30 days of The sign installation. _____

8. **Permitting** – Permitting costs are additional as noted on your contract. Permits Are active for six months from the date of issuance. If the requirements for electrical Service or landscaping as laid out in this agreement are not met before the Permit expires; you will be responsible for permit renewal costs. _____
Once the permit is issued, sign production will begin; please note that each sign has a different fabrication timeline.

9. **Installation of Sign(s)** – To ensure everyone's safety and allow us to complete the Work efficiently, please keep all vehicles or any obstructions clear of the sign installation area. This gives our crew the space they need to work safely and avoids any potential damage to vehicles or equipment. We appreciate your cooperation in helping us get the job done quickly and safely. _____
If at the time of installation there is a vehicle or any obstruction causing delays in the installation, where we would require a return trip to the site an additional trip charge would be required. The cost is based on a time and material basis and will be on the final invoice.

10. **Site Conditions and Damage Waiver** – Customer acknowledges that installation, service, or removal of signage may require the use of vehicles, equipment, or tools on or around the property. While reasonable care will be taken, Gardner Signs dba Ferrin Signs, shall not be held responsible for any damage to grass, landscaping, driveways, sidewalks or other surfaces resulting from the performance of work under this agreement. The customer accepts all responsibility for restoring or repairing such area if desired. _____

X_____ _____
Customer's Signature Date

X_____

Before: Existing Amenities



After: Proposed Upgrades



REP SERVICES, INC.
Experts at Play & Outdoor Spaces
Site Amenities ■ Playground Equipment ■ Safety Surfacing ■ Shade
Phone: 407.831.9658 Fax: 866.232.8532 E-mail: sales@repservices.com

E-mail POs and contracts to:
contracts@repservices.com

Please mail checks to:
Rep Services, Inc.
165 W. Jessup Ave.
Longwood, FL 32750-4146

Proposed To: Village of Palmetto Bay Parks and Recreation 9705 E Hibiscus Street Palmetto Bay, FL 33157 **Attn:** Fanny Carmona	**Ship To:** TBD at a later date **Attn:**	**Bill To:** Village of Palmetto Bay Parks and Recreation 9705 E Hibiscus Street Palmetto Bay, FL 33157 **Attn:** Fanny Carmona

Project No: 22270
Proposal No: 22270.04
Proposal Date: 1/26/2026
Project Name: Village of Palmetto Bay 2025-2026
Proposal Name: Site Furnishings - With Plaque
Proposal Expires: 2/25/2026
Project Contact: Fanny Carmona
Project Location: 9705 East Hibiscus Street
Palmetto Bay, FL 33157
Project County: Miami-Dade

For Questions Contact: Wendy Bowerman ☎ 407-853-3557 ✉ wendy@repservices.com
Consultant: Kevin Harding ☎ 407-853-3575 ✉ kevin@repservices.com **Opt/Rev:** B/2 1/26/26 - AA

Vendor: DuMor **Proj Drawings:** DUM 608497

Class	Part No	Qty	Description	Unit Price	Disc	Net Price	Ext Price
Benches	58-60	7 EA	6' Cast Bench, Steel Seat	1,680.00	-2.0%	1,646.40	11,524.80
Custom	66-766-22SH-BT	7 EA	22 GAL STL Receptacle, Shield, Bonnet Top, for 7.75" Diameter plaque	2,120.00	-2.0%	2,077.60	14,543.20
Miscellaneous	PLAQUE-METAL-7.75 DIA-B	7 EA	7.75" Round Plaque Installed: Metal Bench - Back	615.00	-2.0%	602.70	4,218.90
	PLAQUE-METAL-7.75 DIA-R	7 EA	7.75" Round Plaque Installed: Metal Receptacle	615.00	-2.0%	602.70	4,218.90

Discount per the Clay County Contract #2023/2024-284: $704.20
Product Subtotal: $34,505.80
Freight: Prepaid Ship Method: Best Way FOB: Destination Weight: 4,004 lbs Freight Charge: $3,691.80
DuMor Total: $38,197.60

Installation By RSI Installer: The scope includes the following, as required: 609167

Item	Qty	Description
OFFLOADING	1 LT	Offloading Equipment & Mobilization

RSI Installer Total: $5,000.00

General Terms of Sale and Proposal Summary

Net 30

Product:	$34,505.80
Installation:	$5,000.00
Freight:	$3,691.80
Proposal Total:	$43,197.60

Notes

The Clay County Contract #2023/2024-284 provides a 2% discount on DuMor product. The maximum price for installation is 100% of the product price. (Installation does not include site prep, slabs, footings or engineering).

Basis of Proposal:
Our proposal is based upon email dated 12.16.2025 requesting 58 series bench & matching receptacle with Village of Palmetto Bay plaque. This propsal includes offloading but installation is by others.

Please note the vendor information itemized below.

If a performance and payment bond is required, add 3% to the proposal total.
If a owner controlled insurance program (OCIP) is required, add 2% to the proposal total.

Estimated product delivery schedule
The lead time for your project is 10-14 weeks after RSI receipt of your signed order, finish selections, Credit Agreement and Deposit.

This proposal is for material, freight, and applicable tax only. Any building permits, engineering, unloading, assembly, installation, site preparation and surfacing are by others. Drivers will not unload the shipment. Purchaser must make arrangements for unloading of playground or exercise equipment, shade, and shelter product lines. In most circumstances this will require a forklift. For certain site furnishing orders, a lift gate and pallet jack may be available for an additional fee. Please alert your sales team of this need.

General notes:
If the project is cancelled prior to completion, the project will be billed per the percent of completion. Rep Services, Inc. will provide the percent of completion.

DuMor Site Furnishings:
Color Selection: to be made at time of color submittal approval.
Support Option: to be made at time of support submittal approval.
NOTES: Please be aware of the following

- Some products require assembly.
- Shipments are via Semi Trailer If you require a lift gate and pallet jack delivery, additional fees will be assessed.

DuMor Site Furnishings - Custom Plaque:
Plaque wording is limited to 3 lines
-48 upper case characters
-60 lower case characters
-56 characters in combination, lower and upper case
Wording for each bench must have approved proof and be submitted with the order before casting the plaque.
If ordering the plaque with the bench this will be installed by the factory. Otherwise, a plaque holder will be installed, and the plaque can be ordered later.

Time Limitations Holding Prices Firm:
Orders are shipped within our manufacturer's standard lead times. Requests for delayed shipping may result in additional costs due to increases in freight, material costs or other factors. To secure the prices on this proposal, the offer must be accepted prior to the expiration date noted.

If, during the performance of this contract, the price of a product increases 3% or more as documented by factory quotes, invoices or receipts to contractor (Rep Services, Inc.) from the date of the contract signing the price of shall be equitably adjusted by an amount reasonably necessary to cover such price increases. Where the delivery of *a* produc*t* is delayed, through no fault of contractor (RSI) as a result of the shortage or unavailability of a product, contractor (RSI) shall not be liable for any additional costs or damages associated with such delay(s).

The undersigned warrants that he/she is an authorized representative of Village of Palmetto Bay noted and has the requisite authority to bind Village of Palmetto Bay and/or principal.

Accepted By:

Village of Palmetto Bay			
Company Name	Authorized By	Printed Name	Date

As Its: _____ (Title)

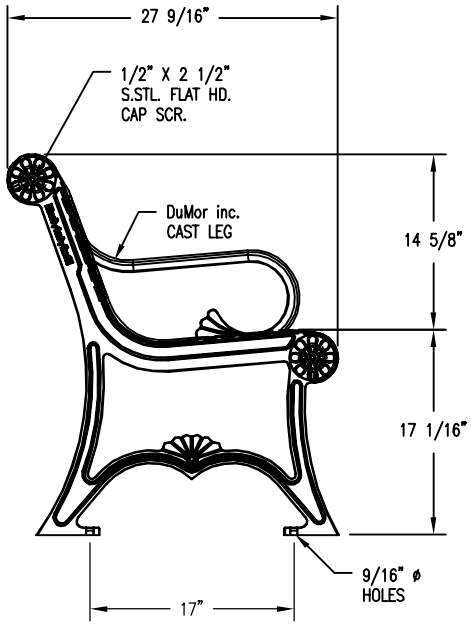

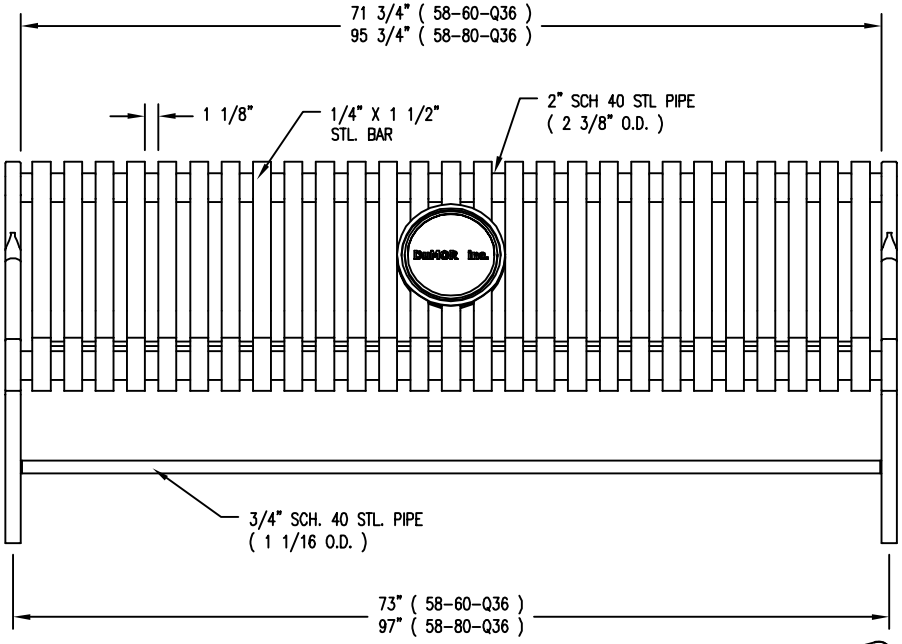

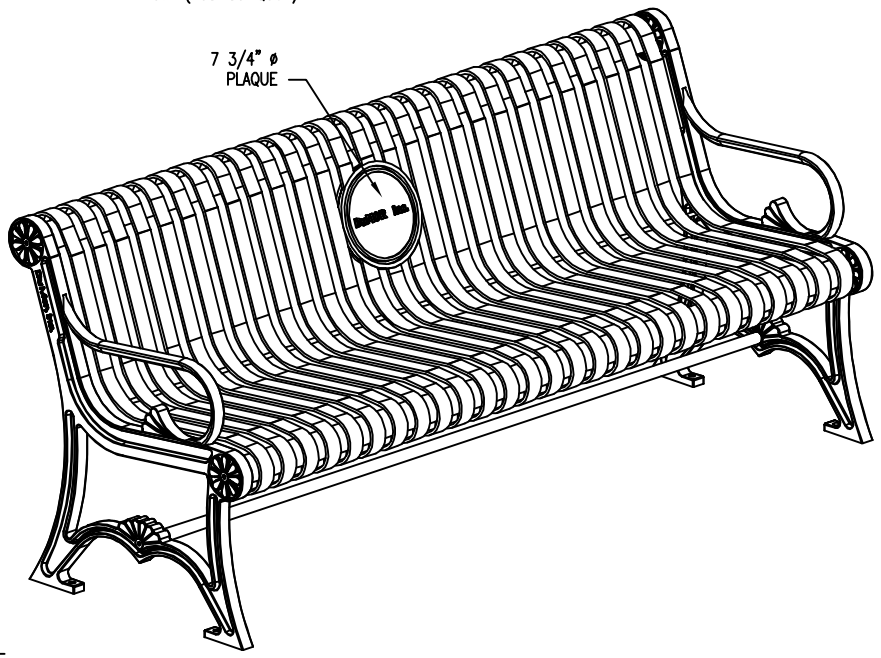

LENGTH OPTIONS

- ☐ 6' BENCH
- ☐ 8' BENCH

NOTES

1.) ALL STL. MEMBERS COATED W/ ZINC RICH EPOXY THEN FINISHED W/ POLYESTER POWDER COATING.

2.) 1/2" X 3 3/4" EXPANSION ANCHOR BOLTS PROVIDED.

3.) CUSTOM LETTERING AVAILABLE FOR RECESSED SIDE PANELS (TOTAL OF 37 SPACES)

☐ CUSTOM LETTERING (37 SPACES) _____

DuMor, inc.	BENCH	DATE DRAWN : 9/3/04 DRAWN BY : JSB DATE REV. : REV. BY :	REV. A	DRAWING NUMBER 58 SER-Q36 FOR 7 3/4" DIA PLAQUE	SHEET 1 OF 2

(1)

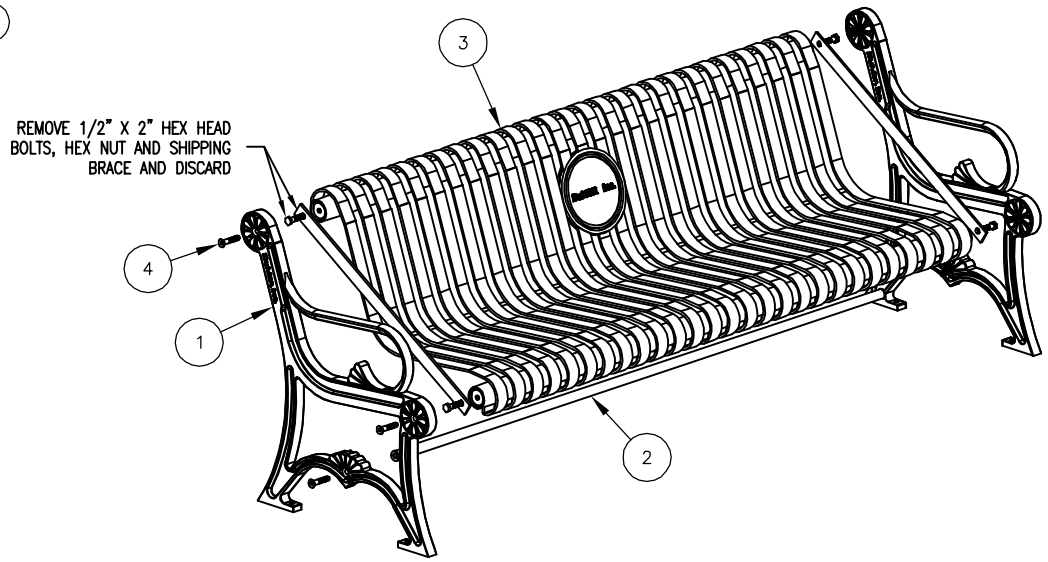

PARTS LIST

ITEM	QTY	PART NO	DESCRIPTION
1	2	0-57-00-02	CAST IRON BENCH SUPPORT W/BACK
2	1	0-57-60-04	71 3/4" PIPE BRACE
3	1	0-58-60-Q36-01	6' SEAT FOR 7 3/4" DIA PLQ
4	6	1-12-065	1/2" X 2 1/2" FLT SKT HD CAP SCR

KITS PROVIDED

ITEM	QTY	PART NO	DESCRIPTION
5	1	K-ANC0860-4	1/2" X 3 3/4" SS ANCHOR KIT (4PC)
6	1	K-FC0840-6	1/2" CAP HARDWARE KIT (6PC)

NOTES:

1.) DURING ASSEMBLY PROCEDURE; DO NOT COMPLETELY TIGHTEN HARDWARE.
2.) THE ACTUAL PARTS WILL NOT BE NUMBERED. NUMBERS ONLY APPLY TO DRAWING.
3.) UPON COMPLETION OF ASSEMBLY SQUARE ALL COMPONENTS THEN TIGHTEN ALL HARDWARE.
4.) MOUNT AND ANCHOR AS SPECIFIED.

TOOLS REQ'D

3/4" WRENCH
5/16" ALLEN WRENCH
1/2" MASONRY DRILL BIT
DRILL
RATCHET STRAP (PROVIDED)

(1A)



PLACE SEAT ASSEMBLY ON WORK SURFACE ALLOWING ACCESS TO END THEN PLACE RATCHET STRAP AROUND SEAT ASSEMBLY AS SHOWN ABOVE.

(1B)



TIGHTEN STRAP UNTIL SHIPPING BRACKET BECOMES LOOSE. THEN REMOVE AND DISCARD BOLTS & SHIPPING BRACKET.

(1C)



ATTACH CASTING TO SEAT ASSEMBLY USING 1/2" x 2 1/2" FLAT SOCKET HEAD CAP SCREWS. IF HOLES IN CASTING DO NOT ALIGN WITH THE SEAT ASSEMBLY, ADJUST BY USING THE RATCHET STRAP.

(1D)



TIGHTEN HARDWARE THEN REMOVE RATCHET STRAP AND REPEAT THIS PROCEDURE ON THE OTHER END OF BENCH.

DuMor, inc.	ASSEMBLY INSTRUCTIONS	DATE DRAWN : 06/08/12 DRAWN BY : ESS DATE REV. : 00/00/00 REV. BY : XXX	REV. A	DRAWING NUMBER	58 SER-Q36 FOR 7 3/4" DIA PLAQUE	SHEET 2 OF 2

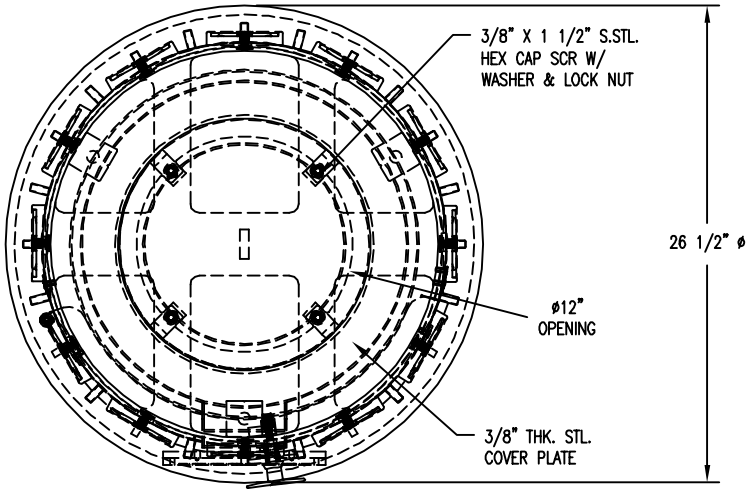

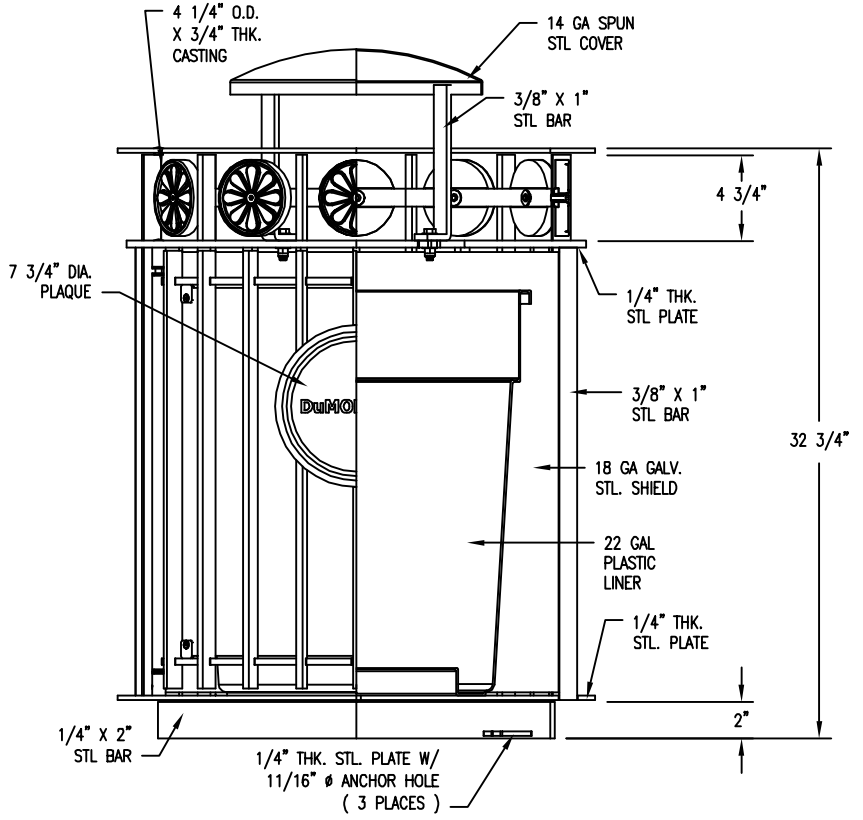

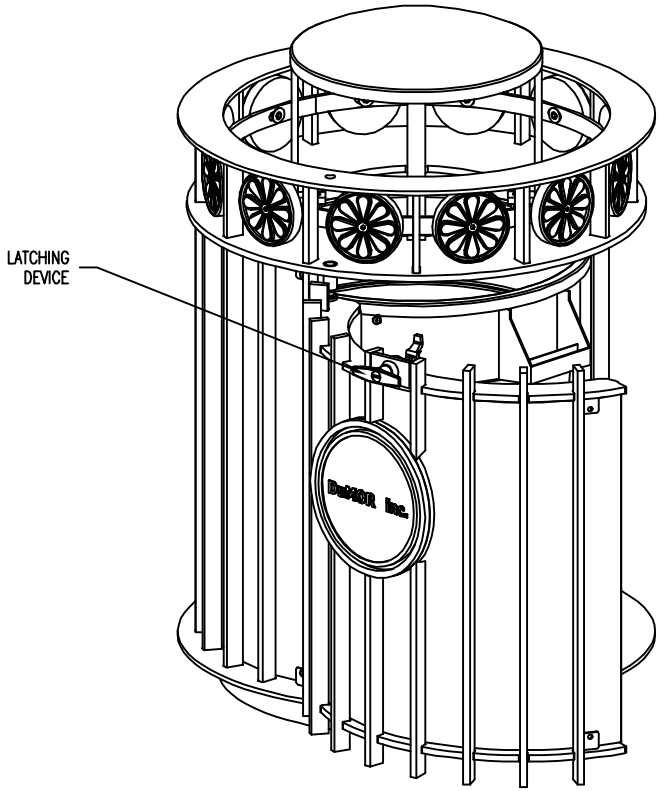

NOTES:

1.) ALL STL. MEMBERS COATED W/ ZINC RICH EPOXY THEN FINISHED W/ POLYESTER POWDER COATING.
2.) 1/2" X 3 3/4" EXPANSION ANCHOR BOLTS PROVIDED.
3.) SIDE OF RECEPTACLE HINGES OPEN FOR REMOVAL OF LINER.
4.) LATCH PROVIDED W/ KEY, USE OF KEY OPTIONAL.

DuMor, inc.	RECEPTACLE	DATE DRAWN : 04/22/21 DRAWN BY : RDH DATE REV. : REV. BY :	REV. A	DRAWING NUMBER 66-766-22SH-BT	SHEET 1 OF 2

NOTES:

1.) DURING ASSEMBLY PROCEDURE;
DO NOT COMPLETELY TIGHTEN HARDWARE.
2.) THE ACTUAL PARTS WILL NOT BE NUMBERED.
NUMBERS ONLY APPLY TO DRAWING.
3.) UPON COMPLETION OF ASSEMBLY SQUARE
ALL COMPONENTS THEN TIGHTEN ALL HARDWARE.
4.) MOUNT AND ANCHOR AS SPECIFIED.

TOOLS REQ'D

3/4" WRENCH
9/16" WRENCH
1/2" MASONRY DRILL BIT
DRILL

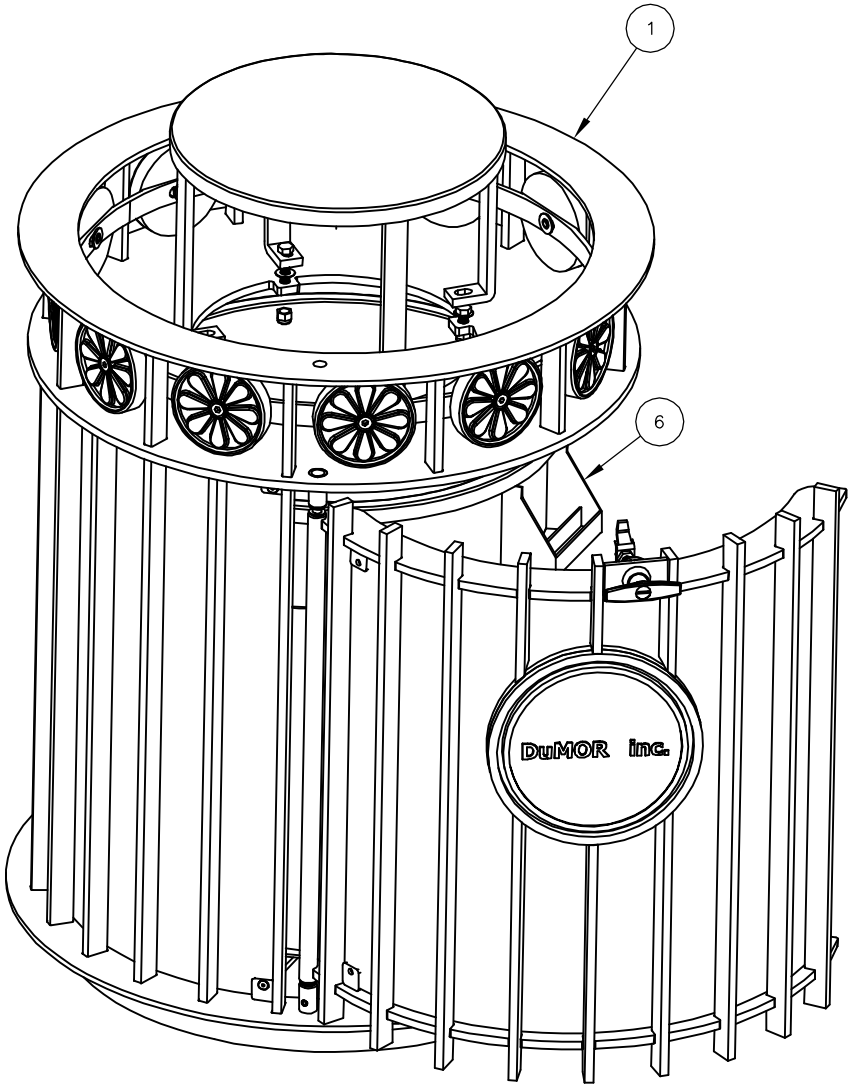

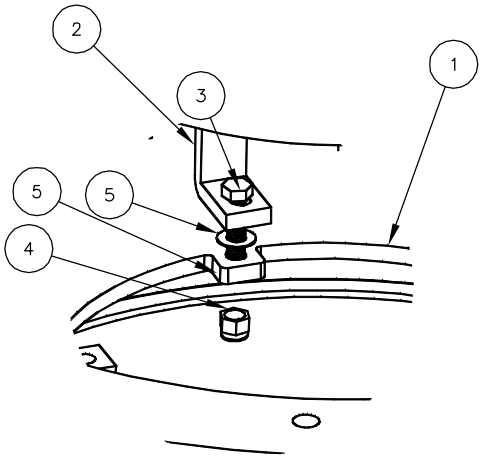

(1) BOLT COVER TO RECEPTACLE.

KITS PROVIDED

ITEM	QTY	PART NO	DESCRIPTION
7	1	K-ANC0860-3	1/2" X 3 3/4" SS ANCHOR KIT (3PCS)
8	1	K-HC0624-4	3/8" CAP HARDWARE KIT (4PC)

PARTS LIST

ITEM	QTY	PART NO	DESCRIPTION
1	1	0-6766-20SH-BT	20 GAL STL RECEPT ASMBLY, BT, FOR 7 3/4" DIA PL
2	1	0-BONNET-01	BONNET TOP
3	4	1-12-017	3/8" X 1 1/2" SS HEX HD CAP SCR
4	4	1-20-007	3/8" SS NYLON LOCKNUT
5	8	1-22-024	3/8" SS FLAT WASHER
6	1	49-22	22 GAL PL LINER W/HANDLE, BLK

DuMor, inc.

ASSEMBLY INSTRUCTIONS

DATE DRAWN : 04/22/21
DRAWN BY : RDH
DATE REV. :
REV. BY :

REV. A

DRAWING NUMBER 66-766-22SH-BT

SHEET 2 OF 2

7 3/4" DIA. PLAQUE

☐ APPROVED-Exactly as provided on the proof supplied by Dumor - No Exceptions!!

☐ REJECTED- Clearly mark all changes.
A new proof will be provided by DuMor.

BY_____DATE_____

INTERNAL USE ONLY
PL ORDERED:
SO/REP:
ITEM:
QTY:
EST:

DuMor®
SITE FURNISHINGS

PLAQUE-041963-03
5-49-Q36ZE
1/07/2026

PLAQUE NOT TO SCALE



7 3/4" DIA. PLAQUE

COLOR SAMPLE ONLY
ACTUAL COLOR MAY VARY FROM
SCREEN REPRESENTATION

***CUSTOMER TO SIGN ORIGINAL
BLACK AND WHITE PROOF
FOR APPROVAL

DuMor®
SITE FURNISHINGS

PLAQUE-041963C-03
5-49-Q36ZE
1/07/2026

PLAQUE NOT TO SCALE



Clay County Contract

Table of Contents

Contract of Award Agreement No. 2023/2024-284	2
Attachment A – Bid Scope of Work	21
Attachment B – Proposal	32
Attachment B – Revised	37

REP SERVICES, INC.
Experts at Play & Outdoor Spaces

Clay County Agreement/Contract No. 2023/2024 – 284

AGREEMENT TO PROVIDE VARIOUS EQUIPMENT AND AMENITIES FOR PARKS AND RECREATION

This Agreement to Provide Various Equipment and Amenities for Parks and Recreation ("Agreement") is entered into and shall be deemed effective as of July 24, 2024, and is between Rep Services, Inc., a Florida Profit Corporation ("Contractor"), and Clay County, a political subdivision of the State of Florida (the "County").

RECITALS

WHEREAS, the County issued an Invitation for Bid, Bid No.: 23/24-074 ("Bid"), to establish a firm, fixed percentage discount from manufacturer's and/or bidder's current catalog/supply/product information price list for the purchase and installation of various equipment and amenities for parks and playgrounds to include a means for qualifying suppliers and establishing pricing for ballpark lighting services and court surfacing; and

WHEREAS, the Contractor responded to the Bid with a proposal that included Contractor's products and discount pricing and pricing details for such products and services ("Proposal"); and

WHEREAS, the County evaluated the proposals submitted, and on July 23, 2024, the Clay County Board of County Commissioners of Clay County, Florida (the "Board") accepted staff's evaluation and awarded the Bid to the 23 companies that responded to the Bid; and

WHEREAS, the awarded Bids will be utilized on an as needed and as requested basis; and

WHEREAS, to the extent permitted by applicable law, the Contractor agrees to offer and extend this Agreement and pricing to any states, municipalities, local governments, school districts, higher educational institutions, public utilities, hospitals, and any other governmental agencies or non-profit organizations; and

WHEREAS, the parties hereby acknowledge and expressly agree that the terms and conditions of the Bid, including any addendums and attachments thereto, as well as the Proposal apply to this Agreement and are incorporated herein by reference; and

WHEREAS, the parties desire to enter into this Agreement in accordance with the terms and conditions set forth herein.

NOW THEREFORE, in consideration of the foregoing recitals, the mutual covenants and promises set forth herein, and for other good and valuable consideration, the receipt of which is hereby acknowledged and all objections to the sufficiency and adequacy of which are hereby waived, the parties agree as follows:

1. EQUIPMENT, PRODUCTS, OR SERVICES

(a) The above recitals are true and correct and are incorporated herein by reference.

(b) For purposes of this Agreement, the County Representative shall be Howard Wanamaker, County Manager, and the Project Manager shall be Donna Fish, Buyer 1 with Clay County Purchasing, or designee.

(c) The Contractor agrees to provide the Products and Services in accordance with the Bid Scope of Work attached hereto as **Attachment A**, its Proposal attached hereto as **Attachment B**, and the terms and conditions of this Agreement when ordered and/or requested from time to time by the County. As used herein, "Products" shall mean all equipment, amenities, materials, and/or products that the Contractor agrees to provide as stated in its Proposal. As used herein, "Services" shall mean any services that the Contractor agrees to provide as stated in its Proposal or as requested under this Agreement, including, but not limited to, installation of Products for parks and playgrounds, ballpark/field lighting services, court surfacing, and other related services.

(d) Products and/or Services will be ordered and/or requested by personnel designated by the County on an as needed basis for the quantity requested during the term of the Agreement. Such orders/requests will be made in accordance with the method of ordering section of **Attachment A**. The County at its sole discretion will generate purchase orders as a result of approved quotations submitted in response to a request. Depending on the Services ordered, the Contractor may be required to enter into a separate agreement or task order with the County addressing such Services.

(e) No later than 30 days prior to the anniversary date of this Agreement throughout the Agreement term, the Contractor may submit an updated Proposal to the Project Manager reflecting any changes to manufacturers and/or Products. Upon receipt, the Project Manager shall review and approve or reject the updated Proposal in writing. If the Project Manager approves the updated Proposal, it shall automatically be deemed to be incorporated into this Agreement and shall replace and/or modify **Attachment B**, in whole or in part, as applicable, as of the date of approval, without the need for a formal amendment or further action by either party. If the Project Manager does not approve the updated Proposal, the original Proposal shall continue without modification.

(f) In providing the Products and Services, the Contractor shall:

1. Be familiar with the ordered/requested Products and/or Services, deadlines, requirements, and the conditions under which the Products and/or Services are to be provided;
2. Conduct business in a manner that reflects favorably at all times on the services and the goodwill and reputation of the County;
3. Avoid deceptive, misleading or unethical practices that are or might be detrimental to the County; and

4. Not use any false, deceptive or misleading trade practices in the performance of the Services.

(g) In entering into this Agreement, the Contractor represents that it now has or will secure all equipment and personnel required to provide all Products and Services as may be requested under this Agreement. The Contractor shall assign such personnel as are necessary to assure faithful prosecution and timely delivery of the Products and/or Services pursuant to the requirements of this Agreement. The Contractor shall ensure that the personnel assigned to provide the Products and/or Services comply with the terms of this Agreement, have current licenses and permits required to provide the Products and/or Services, and are fully qualified and capable to perform their assigned tasks.

(h) The Contractor represents and warrants to the County that Contractor is experienced with providing the Products and Services described in this Agreement and is qualified and competent to provide such Products and perform such Services. The Contractor shall provide any and all Products and perform any and all Services requested in a timely, efficient, workmanlike, and cost-effective manner that comports with professional industry standards, applicable federal, state and local laws and regulations, and in accordance with the applicable professional standards.

(i) The Contractor shall provide the Products and Services using the degree of care and skill ordinarily exercised by similarly practicing professionals performing similar services under similar conditions in the same or similar geographic area and in compliance with all applicable laws ("Standard of Care").

(j) In performance of this Agreement, the Contractor is bound by and shall comply with all terms and conditions of this Agreement and all federal, state, and local laws and regulations applicable to the Products and/or Services. Any reference in this Agreement to a particular law, rule, or regulation in no way implies that no other law, rule, or regulation applies. Any violation of these laws, rules, and regulations shall constitute a material breach of this Agreement and shall entitle the County to terminate this Agreement upon delivery of written notice of termination to the Contractor as outlined herein.

(k) The County may elect, in certain circumstances, to purchase only Products and have such Products installed by others (e.g., volunteers, County staff, etc.). If such election is made, the Products will be shipped to a designated location and off-loaded by the Contractor.

(l) Non-Exclusive. The parties acknowledge and agree that this Agreement is non-exclusive. Nothing in this Agreement shall be construed to prevent either party from entering into similar agreements with other third parties, or from engaging in any other business activities for such products and/or services, including, but limited to the use of other available bids or contracts.

(m) The County gives the Contractor no guarantee of any Products or Services or any specific amount or quantity of Products or Services that may be accomplished or performed by the Contractor during the term of this Agreement. Additionally, the County makes no guarantee of usage by other users or Contracting Entities of this Agreement.

(n) The County may conduct performance evaluations at any time during the term of this Agreement to ensure the Contractor's compliance with the Agreement. One or more evaluations may be conducted solely at the discretion of the County.

2. ADDITIONAL PRODUCTS OR SERVICES

(a) If the County identifies or the Contractor recommends any additional products or services to be provided by the Contractor that are not covered under the Agreement but are beneficial to the County, such additional products and/or services, including scope, timing, and fees, as applicable, must be mutually agreeable between the County and the Contractor and authorized in writing by the County.

3. TERM

(a) The term shall begin on July 24, 2024 ("Effective Date") and shall remain in effect for a period of three years continuing through July 23, 2027, unless sooner terminated as provided herein. The Agreement may be renewed for two additional one year periods upon subsequent written agreement of the parties.

(b) The parties hereto mutually understand and agree that time is of the essence in the performance of this Agreement. The Contractor agrees to timely provide the requested Products and/or Services in accordance with the Agreement and the deadlines that may be established for such Products and/or Services.

(c) Notwithstanding the termination or expiration of this Agreement, this Agreement will survive as to any and all pending purchase orders, contracts, etc., until all of the rights and obligations of both parties thereunder have been fulfilled or the purchase orders, contracts, etc. have been terminated.

4. WARRANTIES AND REPRESENTATIONS

(a) The Products and Services shall comply with all rules, regulations, and requirements set forth in this Agreement and the Attachments to this Agreement.

(b) Warranties related to the Products and/or Services provided under this Agreement shall be established and confirmed at the time of each individual order. For each order, the Contractor shall provide a warranty statement specifying the duration, scope, and terms of the warranty applicable to the specific Products and/or Services being purchased. Depending on the Services ordered, the warranty may be set forth in a separate agreement or task order with the County addressing such Services.

(c) Neither the Services, nor any Products provided by the Contractor under this Agreement will infringe or misappropriate any patent, copyright, trademark or trade secret rights of any third party.

(d) The Contractor certifies that all Products meet all federal and state requirements. Upon

completion of installation of play equipment and/or playground surfacing, the Contractor shall furnish to the County's Purchasing Department a certificate stating the Products/equipment/surfacing and its installation meet all federal and state requirements as outlined in the publications set forth in **Attachment A** under the Compliance with Laws and Codes section. The Contractor further certifies that if the Product(s) delivered and/or installed are subsequently found to be deficient in any of the aforementioned requirements in effect on date of delivery, all costs necessary to bring the Product(s) and installation into compliance shall be borne by the Contractor.

(e) The Contractor warrants that all Products and Services furnished are free from liens and encumbrances, and are free from defects in design, materials, and workmanship. In addition, the Contractor warrants the Products and Services are suitable for and will perform in accordance with the ordinary use for which they are intended.

(f) All material, equipment, manufacturer, or other special warranties required by the Agreement or applicable to the Products and/or Services shall be transferable to, or issued in the name of the County, and provide the warranty period. The period of manufacturer's warranty shall begin to run at the time the Products are received and accepted by a representative of the County.

5. PIGGYBACKING, SALES REPORTS, AND ADMNISTRATIVE FEE

(a) To the extent permitted by law, the Contractor agrees to offer and extend this Agreement and pricing to any states, municipalities, local governments, school districts, higher educational institutions, public utilities, hospitals, and any other governmental agencies or non-profit organizations (collectively "Contracting Entities").

(b) The County as the lead agency for the Bid shall not be liable or responsible for any costs, damages, liability, or other obligations incurred by any Contracting Entities. The Contractor including its subsidiaries shall deal directly with each Contracting Entity concerning the placement of orders, issuance of purchase orders, issuance of contracts, contractual disputes, invoicing, payment, and all other matters relating or referring to such Contracting Entities access or use of the Agreement and/or pricing. Accordingly, any Contracting Entity wishing to use this Agreement will be responsible for placing its own orders, issuing its own purchase order/documents/price agreements/contracts, providing for its own acceptance, making any subsequent payments, addressing any contractual disputes, and handling all other matters relating or referring to its access or use of the Agreement and/or pricing. The Contracting Entities are responsible for obtaining all certificates of insurance and bonds as may be required.

(c) Volume Sales Report. Throughout the term of this Agreement, the Contractor shall submit a quarterly volume sales report ("Sales Report") to the County's Purchasing Department by email at purchasing@claycountygov.com or U.S. mail to the Clay County Board of Commissioners, Attn: Purchasing Department, PO Box 1366, Green Cove Springs, Florida 32043. Quarterly Sales Report dates are as follows: December 31, March 31, June 30, and September 30. Sales Reports must be delivered to the County's Purchasing Department no later than the 15th day of the following month. Initiation and submission of the Sales Reports are the

responsibility of the Contractor without prompting or notification by the County. The Sales Report must be provided regardless of whether or not any sales have been conducted during such quarter (i.e., if there are no sales, Contractor must submit a Sales Report indicating that no sales were made during that particular quarter). The Sales Report must include the following:

- Contracting Entity's name and contact information;
- Detail of any Products sold/purchased including description, quantity, and price;
- Detail of any Services sold/purchased and/or performed; and
- All transactions pertaining to sales for Products and/or Services and pricing for that quarter to include the date the purchase was invoiced/sale was recognized as revenue by Contractor.

(d) Administrative Fee. The Contractor agrees to pay to the County an administrative fee equal to 1.5% of the eligible revenues generated from the sale of Products or Services to Contracting Entities utilizing this Agreement and/or pricing under this Agreement. For purposes of this Agreement, "eligible revenues" shall mean the gross amount actually received by the Contractor from the sale of Products purchased and/or installed utilizing this Agreement, excluding any amounts attributable to shipping, freight, handling charges, taxes, mandatory fees, or any other expenses not directly related to the core sale or installation transaction.

(e) The County will review the Sales Report and will prepare an invoice to the Contractor for payment of the administrative fee based on the Sales Report submitted for that quarter. Such invoices will be submitted to the Contractor at its email address provided to the County's Purchasing Department. Upon receipt of an invoice submitted under this paragraph, the Contractor shall submit payment pursuant to the instructions on the invoice within 30 calendar days of the invoice date.

(f) Failure of the Contractor to provide the quarterly Sales Reports and payment of administrative fees in accordance with an invoice, shall be considered a breach of the Agreement. A late penalty of 15 percent on the value of the administrative fee may be assessed to the Contractor for each month the payment of such fee is not received.

(g) The Contractor agrees to cooperate with the County in auditing transactions under this Agreement to ensure that the administrative fee is paid on all Products and/or Services purchased under this Agreement.

6. PRICING AND PAYMENT

(a) All Products and Services under this Agreement will be priced and/or discounted as stated in Contractor's Proposal. It is understood that Contractor's current catalog/supply/product information price list are subject to change throughout the term of this Agreement. However, percent discount shall remain fixed for the entire term of this Agreement including any renewals or extensions thereto.

(b) Freight must be pre-paid and added to the Invoice and the quote. The County will pay actual freight charges.

(c) Sales Promotion/Price Reduction. The parties acknowledge that sales promotions may occur during the term of the Agreement which will lower prices of Products and Services for the period of such sales promotion. The Contractor acknowledges and agrees that the County shall receive the full benefit of such reductions if lower than the discount established by this Agreement. The County must be notified of these sales promotions in writing, specifying the beginning and ending dates of the sales promotions.

(d) The County shall pay the Contractor for the Products and Services provided under this Agreement in compliance with the specifications at the prices in accordance with **Attachment B** upon presentation of an Invoice submitted to the Paying Agent in accordance with paragraph 7.

7. PAYMENT PROCEDURES

(a) As used herein, the term "Act" means the Local Government Prompt Payment Act set forth in Part VII of Chapter 218, Florida Statutes; the term "Invoice" means a statement, invoice, bill, draw request or payment request submitted by the Contractor under this Agreement; and the term "Submittal Date" means, with respect to an Invoice, the submittal date thereof to the Paying Agent. Invoices shall be submitted to Clay County Comptroller's office ("Paying Agent") by Email at invoices@clayclerk.com or U.S. Mail at Clay County BOCC, PO Box 988, Green Cove Springs, FL 32043 ATTN: Accounts Payable. All payments will be governed by the Act.

(b) Invoices shall be signed by the Contractor and must include the following information and items:

1. The Contractor's name, address and phone number, including payment remittance address.

2. The Invoice number and date.

3. Reference to the Agreement by its title and number as designated by the County and Purchase Order number.

4. Identify the Products and/or Services covered by the Invoice.

5. The total amount of payment requested, the total amount previously requested, and the total amount paid to date for such Products and/or Services covered by the Invoice.

6. Supporting documentation necessary to satisfy auditing requirements (both preaudits and post-audits), for cost and Services completion.

7. The Contractor must provide any additional documents, certificates, or information as needed to support or document the Invoice as may be requested by the County.

(c) Upon receipt of an Invoice submitted under this paragraph, the Paying Agent and/or Project Manager shall date stamp the Invoice as received. Thereafter, the Paying Agent and/or

Project Manager shall review the Invoice and may also review the Products and/or Services as delivered, installed, or performed to determine whether the quantity and quality of the Products and/or Services is as represented in the Invoice and is as required by this Agreement. If the Paying Agent and/or Project Manager determines that the Invoice does not conform with the applicable requirements of this Agreement or that the Products and/or Services within the scope of the Invoice have not been properly delivered, installed, or performed in full accordance with this Agreement, the Paying Agent and/or Project Manager shall notify the Contractor in writing within 10 business days after the improper Invoice is received that the Invoice is improper and indicate what corrective action on the part of the Contractor is needed to make the Invoice proper.

(d) By the submittal of an Invoice hereunder, the Contractor shall have been deemed to have warranted to the County that all Products and/or Services for which payments have been previously received from the County shall be free and clear of liens, claims, security interests or other encumbrances in favor of the Contractor or any other person or entity for failure to make payment.

(e) The parties will attempt to settle any payment dispute arising under this paragraph through consultation and a spirit of mutual cooperation. The dispute will be escalated to appropriate higher-level managers of the parties, if necessary. If the dispute concerning payment of an Invoice remains unresolved within 30 days following the Submittal Date, then the Project Manager shall schedule a meeting between the Contractor's representative and the Project Manager with the County Manager, to be held no later than 43 calendar days following the Submittal Date, and shall provide written notice to the Contractor regarding the date, time and place of the meeting no less than 5 calendar days prior thereto. At the meeting, the Contractor's representative and the Project Manager shall submit to the County Manager their respective positions regarding the dispute, including any testimony and documents in support thereof. The County Manager shall issue a written decision resolving the dispute within 45 calendar days following the Submittal Date, and serve copies thereof on the Contractor's representative and the Project Manager.

(f) The County's review, approval, acceptance of, or payment for the Products and/or Services provided under this Agreement may not be construed or deemed to operate as a waiver of any rights under this Agreement or of any cause of action arising out of the performance of this Agreement, and the Contractor will be and remain liable to the County in accordance with applicable law for damages suffered by the County caused by the Contractor's negligent performance of any of the Products and/or Services furnished under this Agreement

8. INDEMNIFICATION

(a) To the fullest extent permitted by law, the Contractor shall indemnify and hold harmless the County including its officers and employees, from liabilities, damages, losses and costs, including, but not limited to, reasonable attorney's fees, to the extent caused by the negligence, recklessness or intentional wrongful misconduct of the Contractor and persons employed or utilized by the Contractor in the performance of this Agreement.

(b) The County does not agree to and shall not indemnify the Contractor or any other person or entity, for any purpose whatsoever. To the extent any indemnification by the County may be construed under this Agreement, any such indemnification shall be subject to and within the limitations set forth in Section 768.28, Florida Statutes, and to any other limitations, restrictions and prohibitions that may be provided by law, and shall not be deemed to operate as a waiver of, or modification to, the County's sovereign immunity protections.

(c) This paragraph shall survive the expiration or termination of this Agreement.

9. INSURANCE

(a) The Contractor shall maintain throughout the term of this Agreement and completion of any Services and during any renewal or extension term(s) of this Agreement or as required herein insurance of the following types and with such terms and limits:

1. Commercial General Liability
   Coverage must be afforded under a Commercial General Liability policy with limits not less than:
   - $1,000,000 each occurrence and $2,000,000 aggregate for Bodily Injury, Property Damage, and Personal and Advertising Injury
   - $1,000,000 each occurrence and $2,000,000 aggregate for Products and Completed Operations
   - $50,000 each occurrence for Damage to Rented Premises
   - $5,000 Medical Expenses (any one person)

   Commercial and General Liability policy must include coverage for contractual liability and independent contractors.

2. Business Automobile Liability
   Coverage must be afforded for all Owned, Hired, Scheduled, and Non-Owned vehicles for Bodily Injury and Property Damage in an amount not less than $1,000,000 combined single limit each accident. If the Contractor does not own vehicles, the Contractor shall maintain coverage for Hired and Non-Owned Auto Liability, which may be satisfied by way of endorsement to the Commercial General Liability policy or separate Business Auto Liability policy.

3. Workers' Compensation and Employer's Liability
   Any person or entity performing work for or on behalf of the County must provide Workers' Compensation and Employer's Liability insurance in limits not less than:
   - Workers Compensation — Statutory limits
   - Employers Liability — $100,000 Each Accident
     $500,000 Disease Policy
     $100,000 Disease-Each Employee

   Exceptions and exemptions may be allowed by the County Manager, if they are in accordance with Florida Statutes.

The Contractor waives, and the Contractor shall ensure that its insurance carrier waives, all subrogation rights against the County, its employees, agents, boards, and commissions, for all losses or damages. The County requires the policy to be endorsed with WC 00 03 13 Waiver of our Right to Recover from Others or equivalent.

The Contractor must be in compliance with all applicable State and federal workers' compensation laws, including the U.S. Longshore Harbor Workers' Act and the Jones Act, if applicable.

For any Contractor who has exempt status as an individual, the County requires proof of Workers' Compensation insurance coverage for that Contractor's employees, leased employees, volunteers, and any workers performing work.

4. Umbrella/Excess Insurance
   If the Contractor's primary insurance policy/policies do not meet the minimum requirements, the Contractor may provide an Umbrella/Excess insurance policy to comply with the insurance requirements.

(b) Providing and maintaining adequate insurance coverage is a material obligation of the Contractor. Prior to any work or services being performed under this Agreement, the Contractor must deliver valid certificates of insurance for the required insurance coverage to the County's Purchasing Department.

(c) The certificates of insurance for the required coverages, with the exception of Workers' Compensation and Employer's Liability shall name "**Clay County, a political subdivision of the State of Florida, and The Board of County Commissioners, Clay County, Florida, its employees, agents, boards and commissions, as their interests may appear**" as "**Additional Insureds**." The coverage shall contain no special limitation on the scope of protection afforded to the County, its employees, agents, officials, boards, and commissions. The certificates of insurance shall indicate if coverage is provided under a claims-made or occurrence form. If any coverage is provided on a claims-made form, the certificates of insurance will show a retroactive date, which should be the same date of the initial Agreement or prior. The Agreement number, and/or other identifying reference must be listed on the certificates of insurance.

(d) The Certificate Holder on the certificates of insurance should read as follows: "**Clay County Board of County Commissioners, P.O. Box 1366, Green Cove Springs, FL 32043**" or as otherwise designated by the County's Purchasing Department.

(e) The certificates of insurance shall be provided to the County with a thirty (30) day notice of cancellation; ten (10) days' notice if cancellation is for nonpayment of premium. In the event that the insurer is unable to accommodate the cancellation notice requirement, it shall be the responsibility of the Contractor to provide the proper notice. Such notification will be in writing by registered mail, return receipt requested, and addressed to the Certificate Holder. In the event the Agreement term goes beyond the expiration date of any insurance policy, the Contractor shall provide the County's Purchasing Department with an updated certificate of insurance no later

than ten (10) days prior to the expiration of the insurance currently in effect. The County reserves the right to suspend the Agreement until this requirement is met. If any required insurance coverage is canceled, terminated, or revoked, the Contractor agrees to immediately suspend its operations until replacement insurance is obtained and verified.

(f) These insurance requirements may be modified and/or waived, in whole or in part, upon written approval by the County Manager or designee, without the need for a formal amendment to the Agreement.

10. BONDS

(a) A Performance Bond and Payment Bond may be required for specific projects and/or Services provided under this Agreement as security for the faithful performance and payment of the Contractor's obligations. Whether such Bonds will be required, will be based upon the size and price of each particular project and/or purchase under this Agreement. If such Bonds are required, the Contractor understands, acknowledges, and agrees that the Contractor shall cause the Bonds to be recorded in the public records of the County with the Clay County Clerk of Court and Comptroller at the Contractor's sole expense, and shall deliver a certified copy of the recorded Bonds to the County's Purchasing Department prior to receiving a purchase order for the project.

11. DEFAULT AND TERMINATION

(a) Default. If the Contractor breaches any covenant made by it hereunder; fails to satisfactorily perform any condition, provision, or obligation of this Agreement; fails to make progress so as to endanger performance under the terms and conditions of the Agreement; fails to perform on time or timely deliver any requested Products; provides false or inaccurate information; fails to address and/or correct any deficiencies identified by the County during a performance evaluation; fails to timely submit reports as required herein; fails to pay the administrative fee; fails to comply with applicable rules, laws and regulations; or whenever the Contractor ceases operation, dissolves its corporation, or otherwise no longer provides the Products and/or Services under the terms of this Agreement, the County may consider the Contractor to be in default and may assert a default claim by giving the Contractor a written notice of default. Except for a default by the Contractor for failing to comply with applicable laws, rules, and regulations or for no longer providing the services contemplated under this Agreement which must be cured immediately or is otherwise subject to automatic termination for cause, the Contractor shall have 10 calendar days after receipt of the notice of default to either cure the default or, if the default is not curable within 10 calendar days, provide a written cure plan to the County describing how and when the default will be cured, which the County in its sole discretion may approve or disapprove. The Contractor will begin implementing the cure plan immediately after receipt of notice by the County that it approves the plan. If the Contractor fails to cure or the County does not approve the cure plan, then the County may terminate this Agreement for cause.

(b) Termination for Cause. Upon the failure or inability of the Contractor to cure the default as provided above, unless otherwise agreed in writing, the County may, at its option, without

releasing or waiving its rights and remedies against the Contractor and without prejudice to any other right or remedy it may be entitled to hereunder or by law, terminate this Agreement, in whole or in part, for cause immediately upon written notice of termination by the County Representative to the Contractor. In the event the County terminates the Agreement, in whole or in part, because of default by Contractor, the County may procure goods, services, materials, and/or work similar to those terminated, and the Contractor shall be liable for any damages, costs, and any other expenses incurred due to this action. If it is determined that the Contractor was not in default or that the default was excusable (e.g. failure due to causes beyond the control of, or without the fault or negligence of the Contractor), the rights and obligations of the parties shall be those as provided in the provision for Termination for Convenience.

(c) Termination for Convenience. The County may whenever the interests of the County so require, terminate the Agreement, in whole or in part, for the convenience of the County. The County Representative shall give 30 calendar days prior written notice of termination to the Contractor, specifying when the termination is to become effective. In the event of any such termination, the Contractor shall be paid by the County for all Products and/or Services satisfactorily provided up to receipt of the notice of termination, and thereafter until the date of termination, the Contractor shall be paid only for such Services as are specifically authorized in writing by the County. The Contractor may terminate this Agreement for the convenience of the Contractor by giving the County 180 calendar days advance written notice.

(d) Unless directed differently in the notice of termination, the Contractor shall incur no further obligations in connection with the terminated Products and/or Services and shall stop any work to the extent specified and on the date given in the notice of termination. Additionally, unless directed differently, the Contractor shall terminate outstanding orders and/or subcontractor agreements related to the terminated Products and/or Services and shall transfer all Services in progress, completed Services, and other materials related to the terminated Services to the County. The Contractor agrees to refund to the County all pre-paid sums for Products and/or Services that have been cancelled and will not be delivered.

(d) Termination of this Agreement or a portion hereof under the provisions incorporated herein shall not relieve the Contractor of its responsibilities for the completed portion or concerning any just claims arising out of the Products provided and/or Services performed.

12. TAXES

(a) In that the County is a governmental agency exempt from sales and use taxes, the County shall pay no such taxes, any other provisions of this Agreement to the contrary notwithstanding. The County shall provide proof of its exempt status upon reasonable request.

13. APPROPRIATED FUNDS

(a) The Contractor acknowledges that in the budget for each fiscal year of the County during which the term of the Agreement is in effect a limited amount of funds are appropriated which are available to make payments arising under the Agreement. Any other provisions of the Agreement to the contrary notwithstanding, and pursuant to the provisions of Section 129.07,

Florida Statutes, the maximum payment that the County is obligated to make under the Agreement from the budget of any fiscal year shall not exceed the appropriation for said fiscal year.

14. PUBLIC RECORDS

(a) The Contractor acknowledges the County's obligation under Art. 1, Section 24, Florida Constitution, and Chapter 119, Florida Statutes, as from time to time amended (together, the Public Records Laws), to release public records to members of the public upon request. The Contractor acknowledges that the County is required to comply with the Public Records Laws in the handling of the materials created under the Agreement and that the Public Records Laws control over any contrary terms in the Agreement. In accordance with the requirements of Section 119.0701, Florida Statutes, the Contractor covenants to comply with the Public Records Laws, and in particular to:

1. Keep and maintain public records required by the County to provide the Products and Services requested under the Agreement;
2. Upon request from the County's custodian of public records, provide the County with a copy of the requested records or allow the records to be inspected or copied within a reasonable time at a cost that does not exceed the cost provided in Chapter 119, Florida Statutes, or as otherwise provided by law;
3. Ensure that public records that are exempt or confidential and exempt from public records disclosure requirements are not disclosed except as authorized by law for the duration of the Agreement term and following completion of the Agreement if the Contractor does not transfer the records to the County; and
4. Upon completion of the Agreement, transfer, at no cost, to the County all public records in possession of the Contractor or keep and maintain public records required by the County to perform the Services. If the Contractor transfers all public records to the County upon completion of the Agreement, the Contractor shall destroy any duplicate public records that are exempt or confidential and exempt from public records disclosure requirements. If the Contractor keeps and maintains public records upon completion of the Agreement, the Contractor shall meet all applicable requirements for retaining public records. All records stored electronically must be provided to the County, upon request from the County's custodian of public records, in a format that is compatible with the information technology systems of the County.

(b) The Contractor's failure to comply with the requirements of this paragraph shall be deemed a material breach of this Agreement, for which the County may terminate the Agreement immediately upon written notice to the Contractor.

(c) The Contractor acknowledges the provisions of Section 119.0701(3)(a), Florida Statutes, which, as applicable to the County and the Contractor, require as follows:

1. A request to inspect or copy public records relating to the Agreement must be made directly to the County. If the County does not possess the requested records, the County shall immediately notify the Contractor of the request, and the

Contractor must provide the records to the County or allow the records to be inspected or copied within a reasonable time.

2. If the Contractor does not comply with the County's request for records, the County shall enforce the Agreement provisions in accordance with the Agreement.
3. If the Contractor fails to provide the public records to the County within a reasonable time, the Contractor may be subject to penalties under Section 119.10, Florida Statutes.

IF THE CONTRACTOR HAS QUESTIONS REGARDING THE APPLICATION OF CHAPTER 119, FLORIDA STATUTES, TO THE CONTRACTOR'S DUTY TO PROVIDE PUBLIC RECORDS RELATING TO THE AGREEMENT, CONTACT THE CUSTODIAN OF PUBLIC RECORDS AT (904) 529-3604, publicrecords@claycountygov.com, POST OFFICE BOX 1366, GREEN COVE SPRINGS, FLORIDA 32043.

15. AUDIT

(a) The Contractor shall retain all records relating to this Agreement for a period of at least five (5) years after the Agreement ends or terminates, whichever occurs first. All records shall be kept in such a way as will permit their inspection pursuant to Chapter 119, Florida Statutes. The County reserves the right to examine and/or audit such records. This provision shall survive the termination or expiration of this Agreement.

16. SCRUTINIZED COMPANIES CERTIFICATION

(a) In compliance with Section 287.135(5), Florida Statutes, the undersigned hereby certifies that the Contractor is not participating in a boycott of Israel as defined in Section 287.135(1), Florida Statutes; is not on the Scrutinized Companies with Activities in Sudan List or the Scrutinized Companies with Activities in the Iran Petroleum Energy Sector List as referred to in Section 287.135(2), Florida Statutes; and does not have business operations in Cuba or Syria as defined in Section 287.135(1), Florida Statutes. In accordance with Section 287.135(3), Florida Statutes, the County shall have the option of terminating this Agreement if the Contractor is found to have submitted a false certification as provided under Section 287.135(5), Florida Statutes, or been placed on the Scrutinized Companies with Activities in Sudan List or the Scrutinized Companies with Activities in the Iran Petroleum Energy Sector List, or been engaged in business operations in Cuba or Syria, or to have been placed on the Scrutinized Companies that Boycott Israel List or is engaged in a boycott of Israel as defined in Section 287.135(1), Florida Statutes.

17. E-VERIFY REQUIREMENT

(a) Pursuant to Section 448.095, Florida Statutes, the Contractor shall register with and utilize the U.S. Department of Homeland Security's E-Verify system to verify the work authorization status of all new employees hired by the Contractor during the term of the

Agreement, and shall expressly require any subcontractors performing work or providing services pursuant to the Agreement to likewise register with and utilize the U.S. Department of Homeland Security's E-Verify system to verify the work authorization status of all new employees hired by the subcontractor during the term of the subcontractor agreement. Subcontractors shall provide the Contractor with an affidavit stating that the subcontractor does not employ, contract with, or subcontract with an unauthorized alien, as set forth in Section 448.095(2)(b)1, Florida Statutes. Upon request, the Contractor must provide evidence of compliance with this provision. Failure to comply with this provision is a material breach of the Agreement, and the County shall have the option of terminating this Agreement at its discretion.

18. HUMAN TRAFFICKING ATTESTATION

(a) In compliance with Section 787.06 (13), Florida Statutes, the undersigned, on behalf of the Contractor, a nongovernmental entity, hereby attests under penalty of perjury as follows:

1. The Contractor does not use *coercion* for *labor* or *services*, as such italicized terms are defined in Section 787.06, Florida Statutes, as may be amended from time to time.
2. If, at any time in the future, the Contractor does use coercion for labor or services, the Contractor will immediately notify the County and no contracts may be executed, renewed, or extended between the parties.
3. By execution of this Agreement, the undersigned represents that undersigned has read the foregoing statements and confirms that the facts stated in it are true and are made for the benefit of, and reliance by the County.

19. PUBLIC ENTITIES CRIMES

(a) A person or affiliate who has been placed on the convicted vendor list following a conviction for public entity crime may not submit a bid, proposal, or reply on a contract to provide any goods or services to a public entity, may not submit a bid, proposal, or reply on a contract with a public entity for the construction or repair of a public building or public work, may not submit bids, proposals, or replies on leases of real property to a public entity, may not be awarded or perform work as a contractor, supplier, subcontractor, or consultant under a contract with any public entity, and may not transact business with any public entity in excess of the threshold amount provided in Section 287.017 of the Florida Statutes, for CATEGORY TWO for a period of 36 months from the date of being placed on the convicted vendor list.

(b) By signing this Agreement, the Contractor represents that the execution of this Agreement will not violate the Public Entity Crimes Act (Section 287.133, Florida Statutes). Violation of this Section shall result in termination of this Agreement and recovery of all monies paid hereto and may result in debarment from the County's competitive procurement activities.

(c) In addition to the foregoing, the Contractor further represents that there has been no determination, based on an audit, that it or any subcontractor has committed an act defined by Section 287.133, Florida Statutes, as a "public entity crime" and that it has not been formally charged with committing an act defined as a "public entity crime" regardless of the amount of money involved or whether the Contractor has been placed on the convicted vendor list.

(d) The Contractor will promptly notify the County if it or any subcontractor of the Contractor is formally charged with an act defined as a "public entity crime" or has been placed on the convicted vendor list.

20. SUSPENSION AND DEBARMENT

(a) By execution of this Agreement, the Contractor certifies that neither it nor its principals are presently debarred, suspended, proposed for debarment, declared ineligible, or voluntarily excluded from participation in this transaction by any state or federal department or agency.

21. INDEPENDENT CONTRACTOR

(a) The parties to this Agreement are independent contractors. Neither party is an agent, representative, or partner of the other party. This Agreement shall not be interpreted or construed to create an association, agency, joint venture, or partnership between the parties or to impose any liability attributable to such a relationship upon either party.

22. NO ASSIGNMENT

(a) The Contractor shall not assign any of its rights or duties under this Agreement to any other party without the prior written consent of the County, which consent may be withheld by the County for any or no reason. Any such assignment attempted by the Contractor without such prior written consent shall be null and void. If the Contractor attempts to assign any such rights or duties without securing such prior written consent, this Agreement may be declared in default and terminated by the County.

23. SUBCONTRACTORS

(a) The Contractor shall provide the names of all subcontractors performing any work or services under this Agreement to the Project Manager. The County reserves the right to approve the utilization of any subcontractors in connection with this Agreement. Such written authorization may be obtained from the Project Manager on behalf of the County. The County further reserves the right to reject any quotation in response to a request for quotation if such quotation names a subcontractor who has, in the sole opinion of the County, previously failed in the proper performance of an award, failed to deliver on time contracts of a similar nature, or is not in a position to perform properly under this Agreement.

(b) Any subcontractor utilized by the Contractor shall be supervised and compensated by the Contractor.

(c) The Contractor shall be fully responsible to the County for the (i) acts and omissions (ii) satisfactory performance and (iii) timeliness of the Services of its subcontractors and of persons directly or indirectly employed by them.

(d) The Contractor shall cause appropriate provisions to be inserted in all subcontractor agreements relative to the Services giving the Contractor the same powers that the County may exercise over the Contractor under any provision of this Agreement.

(e) Nothing in the Agreement shall be construed as providing any subcontractor with any rights or remedies against the County or any of its employees, principals, officers, or agents for nonpayment or otherwise.

24. NO THIRD-PARTY BENEFICIARIES

(a) Any other provisions of this Agreement to the contrary notwithstanding, no third-party beneficiaries are intended or contemplated under this Agreement, and no third-party shall be deemed to have rights or remedies arising under this Agreement against either party to this Agreement.

25. CONFLICT OF INTEREST

(a) Throughout the term of this Agreement, the Contractor must not accept nor perform any other employment, assignments of contracts nor obligations that would conflict with the Contractor's duties and obligations provided under this Agreement.

26. AMENDMENT OR MODIFICATION OF AGREEMENT

(a) The Agreement may only be modified or amended upon mutual written agreement of the County and the Contractor. No oral agreements or representation shall be valid or binding upon either party. The Contractor may not unilaterally modify the terms of the Agreement by affixing additional terms to or by incorporating such terms onto the Contractor's documents forwarded by the Contractor to the County.

27. FURTHER ASSURANCES

(a) Each of the parties shall cooperate with one another, shall do and perform such actions and things, and shall execute and deliver such agreements, documents and instruments, as may be reasonable and necessary to effectuate the purposes and intents of this Agreement.

28. REMEDIES

(a) The parties will attempt to settle any dispute arising from this Agreement through negotiation and a spirit of mutual cooperation. The Contractor and the Project Manager will use reasonable efforts to arrange meetings as needed, at mutually convenient times and places, to address and work toward resolution of issues that arise in the performance of this Agreement. The dispute will be escalated to appropriate higher-level managers of the parties, if necessary. Each party shall have the right to seek the judicial enforcement and interpretation of this Agreement.

29. GOVERNING LAW AND VENUE

(a) This Agreement shall be governed by and construed in accordance with the laws of the State of Florida. Venue for any litigation, mediation, or other action proceeding between the parties arising out of this Agreement lies in Clay County, Florida.

30. ATTORNEYS' FEES

(a) In the event either party shall retain an attorney to litigate on its behalf against the other party regarding the enforcement or interpretation of this Agreement or regarding the rights, remedies, or obligations of the parties arising under this Agreement, the party prevailing on the majority of its claims, or which successfully defends against a majority of the other party's claims, shall be entitled to an award of reasonable attorney's fees, court costs, and any other expenses against the other party, including fees, court costs, and any other expenses incurred from the date of referral of the dispute to the prevailing party's attorney through the conclusion of litigation, or incurred in bankruptcy or on appeal. Nothing contained herein is intended to serve as a waiver of sovereign immunity and extend the County's liability beyond the limits established in Section 768.28, Florida Statutes.

31. WAIVER

(a) No waiver by either party of any term or condition of this Agreement will be deemed or construed as a waiver of any other term or condition, nor shall a waiver of any breach be deemed to constitute a waiver of any subsequent breach, whether of the same or of a different section, subsection, paragraph, subparagraph, clause, phrase, or other provision of this Agreement.

32. SEVERABILITY

(a) If any provision of this Agreement shall for any reason be held to be invalid or unenforceable, the invalidity or unenforceability of such provision shall not affect any of the remaining provisions of this Agreement, and this Agreement shall be enforced as if such invalid and unenforceable provision had not been contained herein.

33. HEADINGS

(a) The headings contained in this Agreement are for reference purposes only and shall not affect in any way the meaning or interpretation of any or all of the provisions hereof.

34. ENTIRE AGREEMENT

(a) This Agreement represents the entire understanding between the parties regarding the subject matter herein and supersedes all previous agreements, whether oral or written.

35. COUNTERPARTS

(a) The Agreement may be executed in any number of counterparts and by the separate parties in separate counterparts, each of which shall be deemed to constitute an original and all of which shall be deemed to constitute the one and the same agreement.

36. ATTACHMENTS

(a) The Attachments listed below are incorporated herein by reference and made a part of this Agreement as if set out fully herein.

Attachment A: Bid Scope of Work
Attachment B: Proposal

37. AUTHORITY

(a) The parties agree to utilize electronic signatures and that the digital signatures of the parties set forth below are intended to authenticate this Agreement and have the same force and effect as manual written signatures. Each person signing on behalf of the parties represents and warrants that he/she has full authority to execute this Agreement on behalf of such party and that the Agreement will constitute a legal and binding obligation of such party.

IN WITNESS WHEREOF, the parties have executed this Agreement as of the date stated in the introductory paragraph.

CONTRACTOR

By: Bill Geary
Bill Geary (Sep 17, 2024 08:30 EDT)

Print Name: Bill Geary

Print Title: Vice President

CLAY COUNTY, a political subdivision of the State of Florida

By: Howard Wanamaker (Sep 16, 2024 10:22 EDT)
Howard Wanamaker
County Manager on behalf of the
Board of County Commissioners

F:\Contract\Purchasing\Various Equipment and Amenities for Parks Agreement.doc

BACK TO TOP 324

ATTACHMENT A
BID SCOPE OF WORK

INVITATION FOR BID

23/24-074

VARIOUS EQUIPMENT AND AMENITIES FOR PARKS AND RECREATION

Clay County

477 Houston Street

Green Cove Springs, FL 32043

RELEASE DATE: May 16, 2024

LAST DATE FOR INQUIRIES: May 31, 2024, 4:00 pm

BID DUE: June 13, 2024, 4:00 pm

RESPONSES MUST BE SUBMITTED ELECTRONICALLY TO:

https://secure.procurenow.com/portal/claycounty

1. Scope of Work

1.1. Purpose

The purpose of this bid is to establish a firm, fixed percentage discount off manufacturer's and/or supplier's current catalog/supply/product information price list for the purchase and installation of various equipment and amenities for parks and playgrounds. The bid is also a means for qualifying vendors and establishing pricing for ball park lighting services and court surfacing.

1.2. Scope

1. The bid will establish a firm, fixed percentage discount off manufacturer's and/or supplier's current catalog/supply/product information price list for the purchase of various equipment and amenities for parks and playgrounds as requested by Clay County Parks and Recreation. Additionally, this bid will also establish a firm, fixed percentage off manufacturer's and/or bidder's current catalog/supply/product information price list, after applying the above requested discount for purchase, for the installation of various equipment and amenities for parks and playgrounds as needed. The County reserves the right to award to multiple bidders.

2. It is understood that bidder's current catalog/supply/product information price list are subject to change; however, percent discount shall remain fixed. No extra charges or compensation will be allowed for installation above and beyond what has already been presented in the bid. If the bidder offers specialized catalogs, the catalogs must be submitted separately from any other catalog offered by the bidder throughout the duration of the contract.

3. This bid is also a means for qualifying bidders for ball park lighting services and court surfacing. Qualifying bidders will be requested to provide pricing on a project by project basis as defined in the method of ordering section of this bid. The qualified bidder(s) providing the lowest responsive quote based on contracted pricing will be awarded the project.

4. Freight must be pre-paid and added to the invoice and the quote. The County will pay actual freight charges.

5. Performance and payment bonds may be required for specific projects. This requirement is driven by the size and price of each particular job. Bidders will be required to meet this requirement before receiving a purchase order for the project.

6. The County reserves the right to purchase from other agreements when in the best interest of the County.

Responsibility:

Bidder shall be responsible for all labor, materials, equipment, supervision, off-loading, storage, and installation, of various equipment and amenities for parks and playground equipment or amenities ordered, unless otherwise specified by the County. The County may elect, in certain circumstances, to

purchase only materials and have those materials installed by others (e.g., volunteers. County staff). These items will be shipped to a designed location and off-loaded by the bidder or bidder's representative.

1.3. Method of Ordering

The County may generate a Request for Quotation, on an "as needed" basis, for park and playground equipment and/or ball field lighting, lighting installation, and court surfacing together with a request for additional services required to complete that project (see attached Quote sample sheet). The County reserves the right to send such Request for Quotation to any or all awarded bidders. The Request for Quotation can define the project exactly or the Request for Quotation can describe a desired end result, allowing the bidder to design the park or playground site.

After generating a Request for Quotation for a project, and before bidder's submission of its quotation in response to the Request for Quotation, the County may require requested bidder (s) to attend a site visit with County personnel to familiarize the bidder(s) with the site and determine additional services that may be required to complete the project. Bidders will be responsible for the accuracy of all fixed measurements.

The bidder's quotation in response to the Request for Quotation must contain each of the following:

- A detailed breakdown of the cost for the entire project. Descriptions of additional services related to the project, together with their price, shall also be listed.
- Include Catalog Name, Number and associated discount. When quoting projects where freight would be charged, those costs must be included in quote so freight charges can appear on the purchase order. Freight charges for equipment must be pre-paid and added to the invoice.
- Names of any and all subcontractors on the project. It is understood the bidder remains responsible for project completion and acceptance by the County. The County reserves the right to reject any quotation in response to a Request for Quotation if said quotation names a subcontractor who has, in the sole opinion of the County, previously failed in the proper performance of an award or failed to deliver on time contracts of a similar nature, or who is not in a position to perform properly under this award.
- Project Completion Date.
- Include an updated catalog, if needed and updated MSRP lists for the park and play equipment specifically quoted.

The County will generate purchase orders as a result of approved "Request for Quotations" submitted, at the sole discretion of the County. The County reserves the right to not award to any, or to use other available bids or contracts when in the best interest of the County.

1.4. Administrative Fee (Piggybacking)

Cooperative Contract: The Bidder agrees to extend provisions and pricing of this contract to any Municipal, County, Public Utility, Educational Institution, Hospital, or any other non-profit or governmental organization. Governmental entities wishing to use this contract will be responsible for issuing their own purchase documents / price agreements, providing for their own acceptance, and making any subsequent payments. The cooperative entities are responsible for obtaining all certificates of insurance and bonds required. Clay County makes no guarantee of usage by other users of this contract.

A 1.5 percent administrative fee on Eligible Revenues will be paid to the County for any contracts/purchase orders the Bidder receives or agrees to enter into with other entities under the provisions and pricing of the County's contract. The Bidder shall provide quarterly Volume Sales Reports to the County about additional sales to other entities under the provisions and pricing of the Contract. The Reports shall include the ordering agency, detail of items sold including description, quantity, and price; and shall include all transactions pertaining to sales under the contract provisions and pricing for that Reporting Period. Bidder shall provide the Volume Sales Reports regardless of whether or not any sales have been conducted. Failure of the Bidder to provide quarterly reports as required, may be deemed breach of the contract. All payments of administrative fees are due 30 calendar days after the closing of each quarter. A late penalty of 15 percent on the value of the Administrative Fee may be assessed to the Bidder for each month the payments are not received. All sales shall include the 1.5 percent administrative fee.

Volume Sales Reports and Administrative fees will be mailed to the Clay County Board of Commissioners, Attn: Purchasing Department, PO Box 1366, Green Cove Springs, Florida 32043.

1.5. Qualification of Installers

If a bidder utilizes a sub-contracted installer for any park or playground equipment, lighting, or court surfacing a list of sub-contracted installers must be included with this bid. Additionally, upon request the bidder must supply WRITTEN FACTORY/MANUFACTURER CERTIFICATION that its installer, or its sub-contracted installer, is an authorized installer, certified to install various equipment and amenities for parks and playground equipment as required by each manufacturer.

1.6. Catalogs and Manufacturer Suggested Retail Price (MSRP) Lists

Each bidder shall submit with this bid, a website link of each catalog and current catalog/supply/product price list for each catalog submitted. All catalogs and price lists shall clearly identify the bidder's name, address and telephone number. If digital catalogs are not available on website, catalogs must be mailed or delivered to the Clay County Purchasing Department, Fourth Floor, 477 Houston Street, Green Cove Springs, FL 32043 prior to bid opening. Annually Bidder may request that new manufacturers be added. The County reserves the right to approve or deny this request.

SALES PROMOTION/PRICE REDUCTION: It is understood that sales promotions occur during the course of the contract that will lower prices of products for the period of the sales promotion. The County shall receive the full benefit of such reductions if lower than the discount established by this bid. The County

must be notified of these promotions in writing, specifying the beginning and ending dates of the sales promotions.

1.7. Compliance With Laws and Codes

Bidders must strictly comply with Federal, State and local building and safety codes. Equipment must meet all State and Federal safety regulations. The following publications (issue in effect on date of invitation to bid) shall form a part of this specification:

A. American Society for Testing and Materials (ASTM)

ASTM-F1487 Standards – Methods of testing Playground Equipment for Public Use
ASTM-F1292 Standards - Method for testing various surfacing materials to determine their "critical height" (the fall height below which a life-threatening head injury would not be expected to occur)

Copies may be obtained from the:
American Society for Testing and Materials
100 Barr Harbor Drive
West Conshohocken, PA 19428

B. Consumer Product Safety Commission (CPSC) – printed Handbook for Public Playground Safety.

Copies may be obtained from the:
US Consumer Product Safety Commission
4330 East West Highway
Bethesda, MD 20814
(301) 504-7923

C. National Playground Safety Institute (NPSI) – identification of 12 leading causes of injuries on playgrounds.

Copies may be obtained from the:
National Recreation and Park Association
22377 Belmont Ridge Road
Ashburn, VA 20148-4150
(703) 858-0784

D. Americans with Disabilities Act (ADA) Regulations for Title III, Appendix A, Standards for Accessible Design, issued by the Department of Justice.

Copies may be obtained by calling:
(800) 514-0301

Bidders certify that all products (materials, equipment, processes, age appropriate signage, or other items supplied in response to this bid) contained in its bid meet all Federal and State requirements, Upon completion of installation of play equipment and/or playground surfacing, bidder shall furnish to the County a certificate so stating the equipment /surfacing and its installation meet all Federal and State requirements as outlined in the above publications.

Bidders further certify that if the product(s) delivered and/or installed are subsequently found to be deficient in any if the aforementioned requirements in effect on date of delivery, all costs necessary to bring the product(s) and installation into compliance shall be borne by the bidder.

1.8. Award

The County reserves the right to award to multiple bidders. There is no guarantee any purchase order will be issued after award. Purchase orders will be issued subject to availability of funds.

1.9. Site Inspections

It is incumbent upon all bidders to examine the site and insure that they are aware of all conditions that may affect the contract work. The County will not be responsible for conclusions made by the Bidder. No claims for additional compensation will be considered on behalf of any Contractor, Sub-Contractor, materials suppliers or others on account of that person's failure to be fully informed of all requirements of all parts of this bid.

1.10. Work Hours

Workdays and hours – Normal work hours of Monday through Friday, 7:30 a.m. to 5:00 p.m. unless approved by the County Project Manager or designee.

Any work performed outside of the normal County business hours will require prior County approval and payment to the County for all expenses incurred by the County may be required.

1.11. Permit & Fees

The Bidder shall comply with all applicable State and local laws, ordinances, codes, and regulations. The Bidder is required to familiarize themselves with all permits required for each individual project. If a County permit is required, this project is not exempt from permit fees and permit fees must be paid to the County Building Department by the Contractor.

For questions about permitting please contact:

Clay County Building Department

Phone: (904) 269-6307

Email: permits@claycountygov.com

Website: https://www.claycountygov.com/government/building

All other permits, assessments, fees, bonds, and other charges as necessary to perform and complete the work of the individual project is the responsibility of and will be paid for by the Contractor, including any related inspection fees.

1.12. Clean up & Restoration of Site

The Bidder is responsible for anything damaged due to the direct result of installation or construction. Remove all debris from site and dispose of appropriately at Contractor expense.

Bidder shall maintain work site in a safe manner, and daily clear construction debris.

1.13. Bidder and Subcontractor Requirements

1. The Bidder shall be licensed to perform all work listed in the Scope of Work provided.

2. The Bidder shall own or have full access to the appropriate personnel and equipment to complete the project requested.

1.14. Subcontractors and Major Material Suppliers

Contractor shall submit names of subcontractors and major material suppliers that they anticipate utilizing for any portion of the Work required within this RFB.

The County reserves the right to approve all Sub-Contractors. If Sub-Contractors are to be utilized, their names must be included within this Bid. The County may request references of the Sub-Contractors prior to approval. Responsibility for the performance of the Contract remains with the main Contractor exclusively. After the commencement of the project, Sub-Contractors may be added or modified during the Contract period only with prior written permission from the County, and only for reasonable cause, as judged by the County. If any Subcontractor or Major Material Supplier is found to be incompetent, careless, or neglectful, or unduly delays progress of work, they shall be dismissed. Another shall then be employed in its place, as approved the County.

1.15. Damage to Public or Private Property

If property (public or private) is damaged while Contractor is performing work specified or is removed for the convenience of the work, it shall be repaired or replaced at the expense of the Contractor in a manner acceptable to the County prior to the final acceptance of the work. Contractor will be responsible for applying and securing any permits that may be required to complete such repairs.

Contractor must provide protection necessary to prevent damage to property being repaired or replaced.

If the work site has any pre-existing damage, the Contractor shall notify the County Project Manager in writing. Failure to do so shall obligate the Contractor to make repairs per the above section. Any damage to property (public or private) caused by the action of the Contractor shall be repaired or replaced at the expense of the Contractor to the satisfaction of the County. Failure to restore said property within five (5) working days following notification will result in a deduction from the final payment invoice. All damage which occurs as a result of the Contractor's application of materials shall be remedied by the Contractor at no additional cost to the County. Repairs made as a result of damage must be guaranteed for a period of thirty (30) days. Should the replacement be damaged within the 30-day period the Contractor shall replace the materials continually until the area is re-established.

Should the County have any expenses incurred due to the Contractor not restoring the property/damage within said time, any appropriate labor, material, and/or equipment use or rental to restore damaged property to its original condition will be deducted from the final Invoice prior to a payment being made.

1.16. Compliance with Occupation Safety and Health Act

The Bidder warrants that the product(s) and/or service(s) supplied to Clay County shall conform in all respects to the standards set forth in the Occupational Safety and Health Act (OSHA) of 1970 as amended and the failure to comply will be considered a breach of contract. Clay County shall be held harmless against any unsafe conditions and contractor employee incidents.

Bidder certifies that all material, equipment, services, etc., furnished in this bid meets all OSHA requirements for the applicable Sectors. Bidder further certifies that, if the successful bidder, and the material, equipment, service, etc., delivered or provided is subsequently found to be deficient in any OSHA requirement in effect on date of delivery or service fulfillment date, all costs necessary to bring the material, equipment, service, etc., into compliance with the aforementioned requirements shall be borne by the bidder. All Personal Protective Equipment used by the Contractor and their employees shall be ANSI certified and meet OSHA standards.

1.17. Unsatisfactory Equipment and/or Services

The County will discuss all instances of unacceptable equipment and/or services with the awarded Bidder. This shall be immediately rectified by the Bidder at no charge to the County, to include any labor and materials as it may apply.

During this time, the County may suspend service with the Bidder until the problem(s) are corrected or may elect to use another company on an emergency basis. A record of failure to perform or of an unsatisfactory performance may result in supplier debarment.

1.18. Payment

The Contractor may request payment no more than once monthly, based on the amount of work completed. All partial estimates and payments found to be in error shall be subject to correction in the estimates and payments subsequent thereto, and in the final estimate and payment. Payments will be made in accordance with the Florida Local Government Prompt Payment Act.

The amount of such payments shall be the total value of the project work completed to the date of the estimate, based on the quantities and the Contract unit and/or lump sum prices, less an amount retained and less payments previously made. The amount retained shall be determined in accordance with Section 255.078, Florida Statutes.

1.19. Warranty

The Contractor shall provide a warranty for equipment and parts. Warranty will begin from the date of final acceptance.

1.20. Term

The term of bid award for various equipment and amenities for parks and playgrounds will be three (3) years, with two (2) one (1) year renewal options. Discounts from this solicitation shall prevail for the full duration of the contract and including subsequent extensions. The County reserves the right to use other available bids or contracts when in the best interest of the County.

1.21. Performance Evaluation

A work performance evaluation will be conducted periodically to ensure compliance with the Contract.

1.22. Cancellation of Contract

If the awarded Bidder fails to maintain acceptable product quality or to perform adequately in accordance with the terms, conditions and specifications established in this Request for Bid, the County reserves the right to cancel the contract upon thirty (30) days written notice to the Contractor.

1.23. Additional Services

If the County and/or awarded Bidder identifies any additional services to be provided by Bidder that are not covered under the Agreement but are beneficial to the County, such additional services shall be mutually negotiated between the County and the Bidder.

Example Request for Quotation
Various Equipment and Amenities for Parks and Playgrounds

Description of Project:_____
_____
_____

Price Quotation:

Manufacturer	Item and Page Number	Quantity	MSRP Unit Price	Contract Discount	Extended Price

*When quoting projects where freight would be charged, include those costs so freight charges can appear on the purchase order. Freight charges for equipment must be pre-paid and added to the invoice.

Additional Services Required:

Description	Quantity	Unit Price	Extended Price

Total: $_____

List any Subcontractors:

1. Name _____
2. Address _____
3. Telephone Number _____
4. Contact Name _____
5. Designated Work _____
6. Subcontractor Cost _____

BACK TO TOP

ATTACHMENT B
PROPOSAL

RESPONSE DOCUMENT REPORT

RFB No. 23/24-074

Various Equipment and Amenities for Parks and Recreation

RESPONSE DEADLINE: June 13, 2024 at 4:00 pm

Rep Services, Inc. Response

CONTACT INFORMATION

Company:
Rep Services, Inc.

Email:
sales@repservices.com

Contact:
Nathan Almon

Address:
165 West Jessup Ave
Longwood, FL 32750-4146

Phone:
(407) 831-9658

Website:
https://repservices.com/

Submission Date:
Jun 11, 2024 2:33 PM

BACK TO TOP

Distributor	Manufacturer	Equipment Description	% Discount Allowed from MSRP	% Installation Discount	Online Catalog Provided *Provide Link Below, if opting to bring catalog in, please enter "Physical Catalog"*	MSRP List *Provide Link Below, if opting to bring MSRP List in, please enter "Physical List"*
Rep Services, Inc.	Landscape Structures, Inc.	Playground Equipment	2%	NA	https://issuu.com/repservices/docs/_2024_lsi_play_catalog-with_imprint?fr=xKAE9_zU1NQ	Physical List
Rep Services, Inc.	Skyways	Shade Structures	2%	NA	https://issuu.com/repservices/docs/2024_skyways_catalog-with_imprint?fr=xKAE9 zU1NQ	Physical List
Rep Services, Inc.	Poligon Shelters	Shelters, Pavilions, Shade Structures	2%	NA	https://issuu.com/repservices/docs/_poligoncatalog-2023?fr=xKAE9_zU1NQ	Priced Per Job
Rep Services, Inc.	Aquatix	Aquatic Spray Features and Mechancial Packages	2%	NA	https://issuu.com/repservices/docs/_2024-aquatixcatalog-with_imprint	Price Per Job
Rep Services, Inc.	DuMor	Site Furnishings	2%	NA	https://issuu.com/repservices/docs/_2024_dumor_catalog?fr=xKAE9_zU1NQ	Physical List

Distributor	Manufacturer	Equipment Description	% Discount Allowed from MSRP	% Installation Discount	Online Catalog Provided *Provide Link Below, if opting to bring catalog in, please enter "Physical Catalog"*	MSRP List *Provide Link Below, if opting to bring MSRP List in, please enter "Physical List"*
Rep Services, Inc.	Anova	Site Furnishings	2%	NA	https://issuu.com/repservices/docs/_2020_anova_catalog?fr=sYzhjNjQ1MTc3MQ	Physical List
Rep Services, Inc.	2by2 Industries, LLC	Playground Timbers, Ramps, Stakes	2%	NA	https://issuu.com/repservices/docs/_2024_product_catalog?fr=xKAE9_zU1NQ	Physical List
Rep Services, Inc.	iMulch, Inc	Engineered Wood Fiber	2%	NA	NA	Physical List
Rep Services, Inc.	No Fault Safety Surfacing	Poured in Place Rubber Surfacing Products	2%	NA	https://issuu.com/repservices/docs/_nfs_catalog-2022	Physical List
Rep Services, Inc.	Tot Turf Safety Surfacing	Poured in Place Rubber Surfacing Products	2%	NA	https://issuu.com/repservices/docs/_robertsonrecreationalsurfaces_catalog	Physical List

Distributor	Manufacturer	Equipment Description	% Discount Allowed from MSRP	% Installation Discount	Online Catalog Provided *Provide Link Below, if opting to bring catalog in, please enter "Physical Catalog"*	MSRP List *Provide Link Below, if opting to bring MSRP List in, please enter "Physical List"*
Rep Services, Inc.	ForeverLawn	Snythetic Turf Surfacing Products	2%	NA	https://issuu.com/repservices/docs/foreverlawn?e=1884579/4320678	Physical List
Rep Services, Inc.	Safe4Play	Snythetic Turf Surfacing Products	2%	NA	NA	Physical List

ATTACHMENT B
REVISED

Pursuant to Paragraph 1(e) of the Agreement, the attached manufacturer list was approved by the Project Manager on July 15, 2025 **and is deemed incorporated into Attachment B and added to the Agreement.**

Distributor	Manufacturer	Equipment Description	% Discount Allowed from MSRP	% Installation Discount	Online Catalog Provided *Provide Link Below, if opting to bring catalog in, please enter "Physical Catalog"*	MSRP List *Provide Link Below, if opting to bring MSRP List in, please enter "Physical List"*
Rep Services, Inc.	DuraPlay	Poured In Place Rubber Surfacing Products	2%	N/A	https://issuu.com/repservices/docs/duraplay_brochure_03_2022?fr=sODhhMTg3MzIxOTc	Physicall List
Rep Services, Inc.	The Fibar Group	Engineered Wood Fiber - North Florida Territory, North of Marion County Only	2%	N/A	N/A	Physicall List

SUB-CONTRACTOR EQUIPMENT INSTALLERS:

Business Name: Johnny Pitts Construction, Inc.

Address: 4124 Pace Ln, Milton, FL 32571

Phone Number: 850-232-1615

Contact Name: Johnny Pitts

Business Name: D.W. Recreation Services, Inc.

Address: 9951 Equus Circle, Boyton Beach, FL 33472

Phone Number: 561-289-7658

Contact Name: Donald West

Business Name: Al Bosgraaf & Sons, Inc.

Address: 240 Rebel Run, Osteen, fL 32764

Phone Number: 407-402-8497

Contact Name: Gerald Bosgraaf

Note: Upon request bidders must supply WRITTEN CERTIFICATION (s) naming bidder, and/or each of its sub-contractor installer(s), as an authorized installer certified to install park and playground equipment as required by each manufacturer. Installers shall have a Certified National Playground Safety Inspector (NPSI) present during installations and repairs.

(MULTIPLE SHEETS CAN BE USED)

AGENDA ITEM NO. 14.A

Item Cover Page

REGULAR COUNCIL AGENDA ITEM REPORT

DATE:	March 2, 2026
SUBMITTED BY:	Alessia Bencomo, Procurement
ITEM TYPE:	Resolution
AGENDA SECTION:	RESOLUTIONS WITH PUBLIC COMMENT
SUBJECT:	A RESOLUTION OF THE MAYOR AND VILLAGE COUNCIL OF THE VILLAGE OF PALMETTO BAY, FLORIDA, RELATED TO PROCUREMENT; APPROVING THE SELECTION OF _____ TO MANAGE AND OPERATE A FARMER'S MARKET AT CORAL REEF PARK, PURSUANT TO REQUEST FOR PROPOSAL (RFP) NO. 2026-12-003 AND AUTHORIZING THE VILLAGE MANAGER TO ENTER INTO A CONTRACT FOR SAID SERVICES; AND PROVIDING FOR AN EFFECTIVE DATE. *(Sponsored by Administration and Prepared by Procurement Specialist, Alessia Bencomo)*
SUGGESTED ACTION:	

ATTACHMENTS:

Reso Memo - CRP Farmer's Market.doc

Reso - CRP Farmer's Market.docx

To: Honorable Mayor and Village Council

Date: February 9, 2026

From: Nick Marano, Village Manager

Re: Coral Reef Park – Farmer's Market

A RESOLUTION OF THE MAYOR AND VILLAGE COUNCIL OF THE VILLAGE OF PALMETTO BAY, FLORIDA, RELATED TO PROCUREMENT; APPROVING THE SELECTION OF _____ TO MANAGE AND OPERATE A FARMER'S MARKET AT CORAL REEF PARK, PURSUANT TO REQUEST FOR PROPOSAL (RFP) NO. 2026-12-003 AND AUTHORIZING THE VILLAGE MANAGER TO ENTER INTO A CONTRACT FOR SAID SERVICES; AND PROVIDING FOR AN EFFECTIVE DATE. *(Sponsored by Administration and Prepared by Alessia Bencomo, Procurement Specialist)*

BACKGROUND AND ANALYSIS:

The Village has hosted a farmer's market at Coral Reef Park since 2014. To continue providing this service to the Palmetto Bay community, the Village advertised an RFP# 2026-12-003 requesting proposals from companies willing to manage and operate the farmer's market. A total of _____ (__) proposals were received and an evaluation has determined the most advantageous pick ~~and~~ to be the highest scored Proposer: _____.

FISCAL IMPACT:

The Village will receive a total of _____ ($_____) per month as a flat fee with an initial contract term of two (2) years with an option to renew annually thereafter ~~but~~ not exceeding five (5) consecutive years.

Attachments:

A. Recommendation
B. Tabulation and Score Sheets
C. RFP# 2026-12-003
D. Proposal –
E. Proposal –
F. Proposal –

RESOLUTION NO. 2026-_____

A RESOLUTION OF THE MAYOR AND VILLAGE COUNCIL OF THE VILLAGE OF PALMETTO BAY, FLORIDA, RELATED TO PROCUREMENT; APPROVING THE SELECTION OF _____ TO MANAGE AND OPERATE A FARMER'S MARKET AT CORAL REEF PARK, PURSUANT TO REQUEST FOR PROPOSAL (RFP) NO. 2026-12-003 AND AUTHORIZING THE VILLAGE MANAGER TO ENTER INTO A CONTRACT FOR SAID SERVICES; AND PROVIDING FOR AN EFFECTIVE DATE. *(Sponsored by Administration and Prepared by Alessia Bencomo, Procurement Specialist)*

WHEREAS, the Village would like to extend to the residents the opportunity to buy fresh fruits and vegetables, artisan products and other organic items; and

WHEREAS, the continuance of a farmer's market at Coral Reef Park will create a community atmosphere; and

WHEREAS, in furtherance of this effort, the Village issued RFP# 2026-12-003 on January 20th, 2026 and subsequently received _____ (__) proposals from companies able to operate and manage the complete enterprise of a farmer's market ~~in~~ for the Village; and

WHEREAS, the Village wishes to proceed with the selection of _____ as the lowest, responsive, and responsible bidder to complete the scope of work as outlined in RFP# 2026-12-003; and

WHEREAS, the Village Council finds that adoption of this resolution is in the best interest of the Village and its residents.

NOW, THEREFORE, BE IT RESOLVED BY THE VILLAGE OF PALMETTO BAY, FLORIDA, THAT:

Section 1. The selection of _____ pursuant to RFP# 2026-12-003, entitled "Coral Reef Park – Farmer's Market" ("Project") is hereby approved.

Section 2. The Village Manager is authorized to negotiate and enter into a contract with _____ for an initial term of two (2) years with optional one(1) year extensions, not to exceed five (5) consecutive years.

Section 3. Notwithstanding the limitations imposed upon the Village Manager pursuant to the Village's Procurement/Purchasing Policies, the Village Manager is hereby authorized to expend budgeted funds for the Project.

Section 4. This Resolution shall take effect immediately upon passage.

PASSED and **ADOPTED** this 2nd day of March 2026.

Attest:

_____ _____

Missy Arocha **Karyn Cunningham**
Village Clerk **Mayor**

APPROVED AS TO FORM AND LEGAL SUFFICIENCY
FOR THE SOLE USE AND BENEFIT OF THE VILLAGE:

_____
John J. Quick
Village Attorney

FINAL VOTE AT ADOPTION:

Council Member Patrick Fiore _____

Council Member Steve Cody _____

Council Member Marsha Matson _____

Vice-Mayor Mark Merwitzer _____

Mayor Karyn Cunningham _____

AGENDA ITEM NO. 14.B

Item Cover Page

REGULAR COUNCIL AGENDA ITEM REPORT

DATE: March 2, 2026

SUBMITTED BY: Missy Arocha, Human Resources

ITEM TYPE: Resolution

AGENDA SECTION: RESOLUTIONS WITH PUBLIC COMMENT

SUBJECT: A RESOLUTION OF THE MAYOR AND VILLAGE COUNCIL OF THE VILLAGE OF PALMETTO BAY, FLORIDA, RELATING TO PERSONNEL; RATIFYING THE SELECTION OF MAJOR ANTONIO RODRIGUEZ, TO THE POSITION OF VILLAGE COMMANDER FOR THE PALMETTO BAY MUNICIPAL DISTRICT, TO FILL THE CURRENT VACANCY IN ACCORDANCE WITH THE TERMS AND CONDITIONS DELINEATED IN THE VILLAGE'S INTERLOCAL AGREEMENT WITH THE MIAMI-DADE SHERIFF'S OFFICE FOR THE PROVISION OF LOCAL POLICE SERVICES; AND PROVIDING AN EFFECTIVE DATE. *(Sponsored by Administration and prepared by Village Manager, Nick Marano)*

SUGGESTED ACTION:

ATTACHMENTS:
Reso-MDSO-PB Major Appt.

RESOLUTION NO. 2026-___

A RESOLUTION OF THE MAYOR AND VILLAGE COUNCIL OF THE VILLAGE OF PALMETTO BAY, FLORIDA, RELATING TO PERSONNEL; RATIFYING THE SELECTION OF MAJOR ANTONIO RODRIGUEZ, TO THE POSITION OF VILLAGE COMMANDER FOR THE PALMETTO BAY MUNICIPAL DISTRICT, TO FILL THE CURRENT VACANCY IN ACCORDANCE WITH THE TERMS AND CONDITIONS DELINEATED IN THE VILLAGE'S INTERLOCAL AGREEMENT WITH THE MIAMI-DADE SHERIFF'S OFFICE FOR THE PROVISION OF LOCAL POLICE SERVICES; AND PROVIDING AN EFFECTIVE DATE. *(Sponsored by Administration and prepared by Village Manager, Nick Marano)*

WHEREAS, in the year 2024, the Village of Palmetto Bay renewed its Interlocal Agreement with the Miami-Dade Sheriff's Office, formerly the Miami-Dade Police Department, ("Interlocal Agreement"), which is presently valid and in effect until 2029; and,

WHEREAS, Section 9.2 of the Interlocal Agreement provides that in the event of a vacancy, the Village Manager "shall be entitled to select the Village Commander"; and,

WHEREAS, Section 3.3 (1) of the Village Charter stipulates that the Village Manager must obtain majority approval of the Council before appointing any department director; and,

WHEREAS, Major Maria Guerra will be retiring from service effective April 13, 2026, thereby creating a vacancy in the position of Village Commander; and,

WHEREAS, the hiring of this position is critical to the continued daily operations of the Palmetto Bay Municipal District, and the position is funded in the FY 2025-26 Adopted Budget; and

WHEREAS, Major Antonio Rodriguez was recently re-hired by the Miami-Dade Sheriff's Office and was appointed to the rank of Major effective April 13, 2026 to assume the Village Commander post for the Palmetto Bay Municipal District; and,

WHEREAS, Major Antonio Rodriguez is a highly qualified candidate, who is well-regarded in the community, having previously served the Palmetto Bay residents in his capacity as Lieutenant for the Municipal District, and who executed his duties exceptionally and performed his job with steadfast commitment; and,

WHEREAS, the Village desires to move forward with the confirmation of Major Antonio Rodriguez to serve as the Village Commander for the Palmetto Bay Municipal District.

NOW, THEREFORE, BE IT RESOLVED BY THE MAYOR AND VILLAGE COUNCIL OF THE VILLAGE OF PALMETTO BAY, FLORIDA, THAT:

Section 1. The Village Council hereby approves the selection of Major Antonio Rodriguez for the position of Village Commander for the Palmetto Bay Municipal District, in accordance with the terms and conditions of the Interlocal Agreement, and as approved in the FY 2025-26 Adopted Budget.

Section 2. Approval by the Village Council, pursuant to the requirements of Section 3.3 (1) of the Village Charter, shall be part of the selection process in accordance with the Interlocal Agreement, and does not confer any guarantee of employment upon the candidate with the Village of Palmetto Bay.

Section 3 . This Resolution shall take effect immediately upon approval.

PASSED AND ADOPTED this 2nd day of March, 2026.

ATTEST: _____ _____

Missy Arocha	**Karyn Cunningham**
Village Clerk	**Mayor**

APPROVED AS TO FORM AND LEGAL SUFFICIENCY:

_____

John J. Quick
Village Attorney

FINAL VOTE AT ADOPTION:

Council Member Patrick Fiore ____

Council Member Steve Cody ____

Council Member Marsha Matson ____

Vice-Mayor Mark Merwitzer ____

Mayor Karyn Cunningham ____

AGENDA ITEM NO. 14.C

Item Cover Page

REGULAR COUNCIL AGENDA ITEM REPORT

DATE:	March 2, 2026
SUBMITTED BY:	Missy Arocha, Village Council
ITEM TYPE:	Resolution
AGENDA SECTION:	RESOLUTIONS WITH PUBLIC COMMENT
SUBJECT:	A RESOLUTION OF THE MAYOR AND VILLAGE COUNCIL OF THE VILLAGE OF PALMETTO BAY, FLORIDA, AFFIRMING SUPPORT FOR THE PRESERVATION OF THE MIAMI-DADE URBAN DEVELOPMENT BOUNDARY ("UDB") AS IT CURRENTLY EXISTS TO PROTECT DOWNSTREAM WATER RESOURCES, INCLUDING THE BISCAYNE AQUIFER, REGIONAL GROUNDWATER SUPPLIES, AND CONNECTED COASTAL WATERS, AS WELL AS THE EVERGLADES, WETLANDS, AND AGRICULTURAL LANDS; URGING THE MIAMI-DADE COUNTY BOARD OF COUNTY COMMISSIONERS TO UPHOLD COUNTY MAYOR DANIELA LEVINE CAVA'S VETO OF THE PROPOSED DEVELOPMENT OUTSIDE THE UDB; URGING THE FLORIDA STATE LEGISLATURE TO OPPOSE ANY LEGISLATION THAT WOULD WEAKEN THE UDB IN THE MIAMI-DADE COUNTY CHARTER; ENCOURAGING ADVANCEMENT OF ATTAINABLE AND WORKFORCE HOUSING WITHIN THE UDB TO ADDRESS HOUSING AFFORDABILITY WITHOUT EXPANDING DEVELOPMENT INTO ENVIRONMENTALLY SENSITIVE LANDS; DESIGNATING THE PRESERVATION OF THE UDB AS A

STATE LEGISLATIVE PRIORITY FOR THE VILLAGE OF PALMETTO BAY; AND FURTHER, DIRECTING THE VILLAGE CLERK TO TRANSMIT A COPY OF THIS RESOLUTION TO THE MIAMI-DADE COUNTY MAYOR, EACH MEMBER OF THE MIAMI-DADE COUNTY BOARD OF COUNTY COMMISSIONERS, THE SPEAKER OF THE FLORIDA HOUSE OF REPRESENTATIVES, THE PRESIDENT OF THE FLORIDA SENATE, THE MIAMI-DADE STATE LEGISLATIVE DELEGATION, ALL OTHER MUNICIPALITIES WITHIN MIAMI-DADE COUNTY, AND THE VILLAGE'S STATE LEGISLATIVE LOBBYISTS. *(Sponsored by Mayor Karyn Cunningham and Co-Sponsored by Vice Mayor Mark Merwitzer)*

SUGGESTED ACTION:

ATTACHMENTS:
Reso-UDB-KC

RESOLUTION NO. 2026-_____

A RESOLUTION OF THE MAYOR AND VILLAGE COUNCIL OF THE VILLAGE OF PALMETTO BAY, FLORIDA, AFFIRMING SUPPORT FOR THE PRESERVATION OF THE MIAMI-DADE URBAN DEVELOPMENT BOUNDARY ("UDB") AS IT CURRENTLY EXISTS TO PROTECT DOWNSTREAM WATER RESOURCES, INCLUDING THE BISCAYNE AQUIFER, REGIONAL GROUNDWATER SUPPLIES, AND CONNECTED COASTAL WATERS, AS WELL AS THE EVERGLADES, WETLANDS, AND AGRICULTURAL LANDS; URGING THE MIAMI-DADE COUNTY BOARD OF COUNTY COMMISSIONERS TO UPHOLD COUNTY MAYOR DANIELA LEVINE CAVA'S VETO OF THE PROPOSED DEVELOPMENT OUTSIDE THE UDB; URGING THE FLORIDA STATE LEGISLATURE TO OPPOSE ANY LEGISLATION THAT WOULD WEAKEN THE UDB IN THE MIAMI-DADE COUNTY CHARTER; ENCOURAGING ADVANCEMENT OF ATTAINABLE AND WORKFORCE HOUSING WITHIN THE UDB TO ADDRESS HOUSING AFFORDABILITY WITHOUT EXPANDING DEVELOPMENT INTO ENVIRONMENTALLY SENSITIVE LANDS; DESIGNATING THE PRESERVATION OF THE UDB AS A STATE LEGISLATIVE PRIORITY FOR THE VILLAGE OF PALMETTO BAY; AND FURTHER, DIRECTING THE VILLAGE CLERK TO TRANSMIT A COPY OF THIS RESOLUTION TO THE MIAMI-DADE COUNTY MAYOR, EACH MEMBER OF THE MIAMI-DADE COUNTY BOARD OF COUNTY COMMISSIONERS, THE SPEAKER OF THE FLORIDA HOUSE OF REPRESENTATIVES, THE PRESIDENT OF THE FLORIDA SENATE, THE MIAMI-DADE STATE LEGISLATIVE DELEGATION, ALL OTHER MUNICIPALITIES WITHIN MIAMI-DADE COUNTY, AND THE VILLAGE'S STATE LEGISLATIVE LOBBYISTS. *(Sponsored by Mayor Karyn Cunningham)*

WHEREAS, the Urban Development Boundary ("UDB") in Miami-Dade County was established as a core growth-management tool to limit urban sprawl, protect environmentally sensitive lands, preserve agricultural areas, and safeguard natural systems critical to regional water supply and flood resilience; and

WHEREAS, lands located outside the current UDB include wetlands, agricultural soils, and open spaces that play a vital role in protecting downstream water resources, including the Biscayne Aquifer,

regional groundwater supplies, and connected coastal waters, upon which Palmetto Bay and other coastal communities depend for drinking water, environmental health, and resilience to flooding and sea level rise; and

WHEREAS, wetlands and prairies west of the UDB function as natural filtration and storage systems that support groundwater recharge, reduce pollutant loads, and maintain hydrologic connections between inland ecosystems, the Everglades, and downstream coastal waters; and

WHEREAS, the UDB also serves to protect South Dade agricultural lands by maintaining contiguous farming areas, preserving permeable soils, supporting food production, and preventing land-speculation pressures that arise when urban development expands into rural areas; and

WHEREAS, in January 2026, the Miami-Dade County Commission approved amendments to the County's Comprehensive Development Master Plan to allow development of a large heavy-equipment facility on hundreds of acres of predominantly protected wetlands outside the existing UDB, raising significant concerns regarding impacts to wetlands, water resources, flood control, and long-standing growth-management policies; and

WHEREAS, on February 2, 2026, Miami-Dade County Mayor Daniella Levine Cava vetoed the proposed development, citing the County's obligation to protect environmentally sensitive lands, uphold the integrity of the UDB, and ensure that development outside the boundary occurs only when there is a demonstrated and compelling public need consistent with long-range planning principles; and

WHEREAS, weakening or bypassing the UDB through legislative or administrative action risks accelerating sprawl into wetlands and agricultural lands, undermining Everglades restoration efforts, and increasing long-term public costs associated with infrastructure expansion, flood mitigation, and environmental degradation; and

WHEREAS, the Village Council of the Village of Palmetto Bay recognizes that addressing housing affordability is a critical public-policy goal, and acknowledges that developers have argued for expanding the

UDB westward to accommodate industrial and commercial projects as a means to preserve sufficient land within the UDB for affordable and workforce housing; however, the Village Council firmly believes that such housing objectives are best achieved through strategies within the existing UDB, including infill development, redevelopment, zoning reforms, and infrastructure-efficient growth, rather than by encroaching upon environmentally sensitive lands; and

WHEREAS, protecting upstream lands and water systems is directly tied to the long-term environmental, economic, and public-health interests of the Village as a downstream coastal municipality.

NOW, THEREFORE, BE IT RESOLVED BY THE VILLAGE OF PALMETTO BAY, FLORIDA, THAT:

Section 1. The above recitals are true and correct and incorporated reference into this resolution.

Section 2. The Mayor and Village Council hereby affirms its support for the preservation of the UDB as it currently exists to protect downstream water resources, including the Biscayne Aquifer, regional groundwater supplies, and connected coastal waters, as well as the Everglades, wetlands, and agricultural lands; urges the Miami-Dade County Board of County Commissioners to uphold County Mayor Daniella Levine Cava's veto of the proposed development outside the UDB; urges the Florida State Legislature to oppose any legislation that would weaken the UDB in the Miami-Dade County Charter; encourages the advancement of attainable and workforce housing within the UDB to address housing affordability without expanding development into environmentally sensitive lands; and designates the preservation of the UDB as a State legislative priority for the Village of Palmetto Bay.

Section 3. The Village Clerk is hereby directed to transmit a copy of this Resolution to the Miami-Dade County Mayor, each member of the Miami-Dade County Board of County Commissioners, the Speaker of the Florida House of Representatives, the President of the Florida Senate, the Miami-Dade State Legislative Delegation, all other municipalities within Miami-Dade County, the Village's state legislative lobbyists, and the Executive Director of the Miami-Dade League of Cities.

Section 4. This resolution shall take effect immediately upon its adoption.

PASSED and **ADOPTED** this 2nd day of March 2026.

Attest:

_____ _____

Missy Arocha **Karyn Cunningham**
Village Clerk **Mayor**

APPROVED AS TO FORM AND LEGAL SUFFICIENCY FOR THE SOLE USE AND BENEFIT OF THE VILLAGE:

_____
John J. Quick
Village Attorney

FINAL VOTE AT ADOPTION:

Council Member Patrick Fiore _____

Council Member Steve Cody _____

Council Member Marsha Matson _____

Vice-Mayor Mark Merwitzer _____

Mayor Karyn Cunningham _____

AGENDA ITEM NO. 14.D

Item Cover Page

REGULAR COUNCIL AGENDA ITEM REPORT

DATE:	March 2, 2026
SUBMITTED BY:	Missy Arocha, Village Council
ITEM TYPE:	Resolution
AGENDA SECTION:	RESOLUTIONS WITH PUBLIC COMMENT
SUBJECT:	A RESOLUTION OF THE VILLAGE COUNCIL OF THE VILLAGE OF PALMETTO BAY, FLORIDA, ESTABLISHING THE "CLEAN PAWS PROGRAM," A VOLUNTARY COMMUNITY DOG WASTE BAG DISPENSER PROGRAM; AUTHORIZING THE VILLAGE MANAGER TO IMPLEMENT THE PROGRAM; ALLOCATING FIVE THOUSAND DOLLARS ($5,000.00) FOR THE PURCHASE AND INSTALLATION OF BAG DISPENSERS, REFILL BAGS, AND PROGRAM SIGNAGE; AND PROVIDING FOR AN EFFECTIVE DATE. *(Sponsored Vice Mayor Mark Merwitzer)*
SUGGESTED ACTION:	

ATTACHMENTS:

Reso-Clean_Paws
Exhibit A - Pet Waste Station Request Form
Exhibit B - Hoboken Wants You To Adopt a Pet Waste Station

RESOLUTION NO. 2026-_____

A RESOLUTION OF THE VILLAGE COUNCIL OF THE VILLAGE OF PALMETTO BAY, FLORIDA, ESTABLISHING THE "CLEAN PAWS PROGRAM," A VOLUNTARY COMMUNITY DOG WASTE BAG DISPENSER PROGRAM; AUTHORIZING THE VILLAGE MANAGER TO IMPLEMENT THE PROGRAM; ALLOCATING FIVE THOUSAND DOLLARS ($5,000.00) FOR THE PURCHASE AND INSTALLATION OF BAG DISPENSERS, REFILL BAGS, AND PROGRAM SIGNAGE; AND PROVIDING FOR AN EFFECTIVE DATE. *(Sponsored Vice Mayor Mark Merwitzer)*

WHEREAS, Section 5-20 of the Miami-Dade County Code of Ordinances, applicable to the Village, requires responsible parties to remove dog waste from public rights-of-way and other public property and to deposit such waste in appropriate trash receptacles, sanitary disposal units, or sealed containers; and

WHEREAS, the failure to properly remove and dispose of dog waste poses a public health risk, including the potential transmission of cutaneous larva migrans and visceral larva migrans, diseases caused by parasites found in dog feces; and

WHEREAS, the Village Council finds that conveniently located dog waste bag dispensers along public rights-of-way and easements will encourage responsible pet ownership and improve compliance with existing county ordinances; and

WHEREAS, the Village Council finds it is in the best interest of the Village to authorize the Village Manager to implement the Clean Paws Program, including the authority to establish program guidelines, an application process, and a standard revocable license and hold harmless agreement for execution by participating residents.

NOW THEREFORE, BE IT RESOLVED BY THE MAYOR AND VILLAGE COUNCIL OF THE VILLAGE OF PALMETTO BAY, FLORIDA, AS FOLLOWS:

Section 1. The above recitals are incorporated as if set forth in full.

Section 2. Program Established.

(1) There is hereby established the "Clean Paws Program," a voluntary community program wherein the Village shall offer dog waste bag dispensers to qualifying residents, businesses, homeowners' associations, and community associations for installation on the public easement or right-of-way adjacent to the participant's property.

(2) The Village Manager, or designee, is hereby authorized and directed to develop and administer the Clean Paws Program, including establishing program guidelines, an application and selection process, and all necessary forms and agreements. Participation shall be conditioned upon execution of a Revocable License and Hold Harmless Agreement by the participating resident, business, homeowners' or community association in a form approved by the Village Attorney.

(3) For business entities and associations, the agreement shall be executed by an authorized representative with legal authority to bind the entity. All dispensers shall remain the property of the Village. The Village Manager shall retain the authority to revoke any license, remove or relocate equipment, and terminate participation at any time, with or without cause.

(4) The Clean Paws Program is a voluntary, supplemental community initiative. Nothing in this Resolution shall be construed to create, expand, or modify any duty, obligation, or liability of the Village, including any obligation to enforce Section 5-20 of the Miami-Dade County Code. The Village assumes no liability for any claims arising from the deposit of waste into a participating resident's green bin by members of the public.

Section 3. The Village Council hereby allocates Five Thousand Dollars ($5,000.00) from the General Fund for the purchase of bag dispensers, refill bags, and any necessary installation materials for the execution of this program.

Section 4. This Resolution shall take effect immediately upon passage.

PASSED and **ADOPTED** this 2nd day of March, 2026.

Attest:

_____	_____
Missy Arocha	**Karyn Cunningham**
Village Clerk	**Mayor**

APPROVED AS TO FORM AND LEGAL SUFFICIENCY FOR THE SOLE USE AND BENEFIT OF THE VILLAGE:

_____
John J. Quick
Village Attorney

FINAL VOTE AT ADOPTION:

Council Member Patrick Fiore _____

Council Member Steve Cody _____

Council Member Marsha Matson _____

Vice-Mayor Mark Merwitzer _____

Mayor Karyn Cunningham _____

Exhibit A: [City of Hoboken] Pet Waste Station Request Form

Adopt-a-Pet Waste Station Request

Adopt a pet waste station near your property to promote clean streets in the City of Hoboken!

Free pet waste stations will be available to property owners and managers within Hoboken. The following supplies will be provided at no cost (while supplies last):

- 1 pet waste bag dispenser with signage
- starter supply of pet waste bags

The City will purchase and install a pet waste station (bag dispenser) within a one (1)-block radius of your property. By adopting a pet waste station, you agree to refill your station with bags and encourage your neighbors to properly dispose of pet waste. Please complete this form to request a pet waste station near your property.

Eligibility & Conditions:

- Pet waste station will consist of a bag dispenser similar to this example.
- City of Hoboken will install the pet waste station in the City right-of-way. Special permission is required to install in the Hudson County right-of-way.
- Only sidewalk locations will be considered. Private property such as courtyards and backyards will not be considered.
- Pet waste station will be installed within one (1)-block distance from the Applicant.
- No more than one (1) pet waste station will be located on any block.
- No more than one (1) pet waste station will be provided to any Applicant.
- City of Hoboken will consult with the applicant on the pet waste station location, but reserves the right to determine the ultimate location for the pet waste station considering factors including but not limited to: proximity to public trash cans, proximity to other pet waste stations, and availability or feasibiltiy of locations for anchoring the pet waste station (fence, post, etc.).
- Applicants will be considered on a first-come, first-serve basis, subject to available budget and other factors. Not every Applicant is guaranteed a pet waste station.
- Applicant agrees to refill the pet waste station with bags within two (2) days of it being empty. Should the applicant not refill the pet waste station with bags within two (2) days of it being empty, the City reserves the right to relocate the pet waste station.
- Applicant agrees to maintan the pet waste station including dispenser and signage.
- Applicant agrees to encourage neighbors to properly dispose of pet waste.
- Applicant agrees to review the Hoboken Dogs and Other Animals ordinance.
- Applicant must be a Hoboken property owner or manager in compliance with the Hoboken Registered Agent ordinance. Applicant will designate a registered agent (primary contact person), identified on this request form in typed name and signature. Applicant will notify the City of Hoboken when there is a change in the registered agent.
- Applicant agrees to notify the Department of Environmental Services via email if the dispenser or signs

are vandalized or stolen. The City of Hoboken is not liable for any damage to the pet waste station.

lease contact the Hoboken Department of Environmental Services with any questions at 201.420.2000
4000 or dcalamoneri@hobokennj.gov.

Applicant Name

First Name *

Last Name *

This field is required.

This field is required.

Email *

example@domain.com

This field is required. Please enter a valid email.

Phone Number *

xxx-xxx-xxxx

This field is required. Please enter a valid phone.

What is the address of the property where you're requesting a pet waste station?

Street Address *

This field is required.

City *

This field is required.

State *

Choose State

This field is required. Please select an option.

Zip

What is the name of the property where you're requesting a pet waste station? (if applicable)

Do you own or manage the property where you're requesting the pet waste station?

- I am the property owner
- I am a unit owner (condo or co-op)
- I am the property manager

Suggest a location within one (1) block of the property where the pet waste station could be installed (be as specific as possible).

Pet Waste Station Consent and Care Agreement

After receiving your application, the City of Hoboken will inspect the requested location. If the Applicant is approved for a pet waste station, the City will provide an email confirmation from the City of Hoboken Department of Environmental Services stating the exact location of the pet waste station.

For questions, please contact the Hoboken Department of Environmental Services at 201.420.2000 x4000 or dcalamoneri@hobokennj.gov.

I hereby request and consent to the installation of a pet waste station near my property, and further agree to refill the pet waste station with bags, in accordance with the aforementioned eligibility & conditions. *

First Name

John

This field is required.

Last Name

Smith

This field is required.

Email

example@domain.com

Must enter a valid email address

Draw Type

THE HOBOKEN GIRL

Advertisement



Hoboken Wants You to Adopt a Pet Waste Station

Advertisement



Steph • August 26, 2019

Advertisement



In the ongoing effort to keep the Mile Square dog sh*t free, the City of Hoboken is launching a new campaign that encourages residents and companies to adopt-a-pet waste station. Much like the popular nationwide adopt-a-highway program, adopting a pet waste station would mean the adoptee takes care of the station, frequently ensures the surrounding area is clean, and regularly provides refills of plastic poop bags.

In a recent tweet, the City of Hoboken wrote, “Help keep Hoboken #clean and adopt-a-pet waste station! Please fill out the form... if you are interested in adopting a pet waste station to provide pet waste bags and



Advertisement



Advertisement



Advertisement

help reduce pet waste on our streets {sic}." **Keep reading to learn more about the adopt a pet waste station program in Hoboken.**



City of Hoboken
@CityofHoboken

Follow

Help keep Hoboken #clean and adopt-a-pet waste station! Please fill out the form at hoboken.seamlessdocs.com/f/foy65zcyz6fa if you are interested in adopting a pet waste station to provide pet waste bags and help reduce pet waste on our streets. #KeepHobokenClean



4:32 PM - 19 Aug 2019

Pet Waste Stations in Hoboken



{Photo credit: Twitter}

In an online document, the City of Hoboken put out an official request for residents to adopt a station. As you may recall, the free pet waste stations in Hoboken were added in May 2019 in an effort to combat pet waste. In

addition to the pet waste stations, Hoboken also cracked down on dog-doo thanks to the help of a new, strictly-enforced ordinance.

Advertisement



See More:* *A Guide to Picking Up Your Dog's Sh*t in Hoboken

According to the May 2019 press release, "The stations, which will include a starter supply of pet waste bags, will be purchased and installed by the City free of charge for interested property owners or condominium associations pledging to maintain and refill the station with bags."

Advertisement



At the time, Mayor Ravi S. Bhalla said in a statement, “My administration is committed to clean streets and sidewalks. I encourage property owners across Hoboken to help play a role and adopt free pet waste stations, which have been successful in reducing pet waste in other regions.”

The ordinance detailed that the following pet-related offenses would be more strictly enforced:

Advertisement



- Leashed dogs: Dogs on sidewalks, streets, and in parks must be on a leash, except when in a dog run.
- Picking up poop: Failing to pick up after your pet on sidewalks, streets, and in parks is punishable by a fine of up to $2,000.
- Licensing your pet: All dogs in Hoboken MUST be licensed by law. Learn more: *hobokennj.gov/petlicense*.
- Disposal of pet poo: Dispose of pet waste in your trash can or in one of Hoboken's 300+ public trash cans.

As a response to the ordinance, Hoboken PD did go a little ticket-happy for a minute there, ticketing owners for having their dogs on public Hoboken grass. {That was a *whole thing*, but luckily, it has died down.}

How the Pet Waste Stations Will Work

When a property owner or manager in Hoboken requests a pet waste station, the City purchases and installs one {free of charge!} within a one-

block radius of the property. The starter kit comes with one pet waste bag dispenser with signage and a starter supply of pet waste bags. As soon as the inaugural roll runs out, the owner of the station is responsible for refilling it.



{Photo credit: City of Hoboken}

As part of this second wave of promoting the adopt-a-pet waste stations, applicants must fill out a request online but the City states, are not guaranteed to a pet-waste station. Myriad factors such as an applicant's available budget will be considered. According to the online Adopt-a-Pet Waste Station request, residents who apply to adopt a pet waste station agree to the following items {amongst others}:

- Applicant agrees to refill the pet waste station with bags **within two {2} days of it being empty**. Should the applicant not refill the pet waste station with bags within two {2} days of it being empty, **the City reserves the right to relocate the pet waste station**.
- Applicant agrees to maintain the pet waste station including dispenser and signage.
- Applicant agrees to encourage neighbors to properly dispose of pet waste.
- Applicant **must be a Hoboken property owner or manager in compliance** with the Hoboken Registered Agent ordinance. Applicant will designate a registered agent {primary contact person}, identified on this request form in typed name and signature. Applicant will

notify the City of Hoboken when there is a change in the registered agent.

- Applicant agrees to notify the Department of Environmental Services via email if the dispenser or signs are vandalized or stolen. The City of Hoboken is **not liable for any damage to the pet waste station**.
- Applicant agrees to review the Hoboken Dogs and Other Animals ordinance.

Does this sound like you or something you want to volunteer to do? Then go for it. You go, Glen Coco! On behalf of the residents here, we need amazing, selfless people like you to provide poopy bags for all the dogs of Hoboken. So: Thank you.

Other Waste Bag Options



That being said, we'd love to draw your attention to an environmentally-friendly, biodegradable option for doggy poop bags. Have you heard of BioBags? This trash bag company makes pet waste bags that are 100% compostable and biodegradable, which means given the right circumstances, these bags actually break down naturally and eventually, turn into soil. {They also make bags for regular kitchen trash, lawn, leaf, and garden waste bags, as well as biodegradable produce bags.}

See More: Dog Park Etiquette — What to Know When Visiting With Pups



Steph

Ac[illegible] the [illegible] website, BioBags can be composted along with org[illegible]e in municipal composting facilities. This most likely means it won't break down if you trash it or add it to your own residential compost. The bag, which meets the ASTM D6400 standard specification [illegible]

join our **newsletter**

Email address

SUBSCRIBE

Community Compost Company.

Poop {particularly, pet poop} is bad for the environment. In an ideal world, we could just leave the poop behind where it would break down naturally. However, that's [illegible] {It also probably wouldn't break down so great on concrete, either!} Since leaving puppy poo-poo behind is never an option in the Mile Square — we all want our City to be as clean as possible after all, and no one wants to step in a hot,

also **appears** in

EVENTS + NEWS

NEWS

Advertisement



more questions? Feel free to contact the Hoboken Department of

more local stories

What do you think about the City's latest anti-pet-waste initiative? Let us know in the comments below!

Historic Loew's Jersey Theatre in Journal Square Preparing for 2026 Reopening

Advertisement

Hoboken's Oldest Sushi Spot, Ubu, Closes After 30 Years



Meet Heidi Conlin, a Longtime Hoboken Resident Now Practicing Law at Marciano Law Firm

Gaming, Collectibles, RPGs: Hoboken + Jersey City Spots to Embrace Your Nerdy Side

100+ Events in Hoboken + Jersey City | Weekend of February 19 – February 25, 2026



explore our brands

THE LOCAL GIRL

THE HOBOKEN GIRL

THE MONTCLAIR GIRL

THE BERGEN GIRL

THE JERSEY SHORE GIRL

THE FAIRFAX GIRL

THE CATSKILLS GIRL

events calendar

EVENT CALENDAR

SUBMIT AN EVENT

deals + promotions

LOCAL DEALS

WEDDING DIRECTORY

local jobs + careers

VIEW LOCAL JOBS

POST A NEW JOB

real estate directory

VIEW ALL LISTINGS

SUBMIT A LISTING

AMENITY BUILDINGS

let's connect

NEWSLETTER SIGN UP

ADVERTISING

PARTNERSHIPS

OUR STORY

MEET OUR TEAM

Email hello@hobokengirl.com with any story updates, edits, or fixes.

Part of The Local Girl Media Group.

© The Local Girl LLC. All Rights Reserved. 2012 - 2026

Privacy Policy + Terms of Service

DO NOT SELL OR SHARE MY PERSONAL INFORMATION

AGENDA ITEM NO. 14.E

Item Cover Page

REGULAR COUNCIL AGENDA ITEM REPORT

DATE:	March 2, 2026
SUBMITTED BY:	Missy Arocha, Village Council
ITEM TYPE:	Resolution
AGENDA SECTION:	RESOLUTIONS WITH PUBLIC COMMENT
SUBJECT:	A RESOLUTION OF THE MAYOR AND VILLAGE COUNCIL OF THE VILLAGE OF PALMETTO BAY, PROCLAIMING "WIENER FEST" AND PROVIDING ACTIVITIES FOR DOGS AND RESIDENTS AT A SPECIAL EVENT AT PERRINE WAYSIDE DOG PARK; TO INVITE PARTICIPATION OF MIAMI-DADE COUNTY ANIMAL SERVICES FOR PET ADOPTION AND EDUCATIONAL OUTREACH; TO PROMOTE THE VILLAGE'S ADOPT-A-PET INITIATIVE; AND PROVIDING FOR AN EFFECTIVE DATE. *(Sponsored by Councilmember Marsha Matson)*
SUGGESTED ACTION:	

ATTACHMENTS:
Reso-Wiener Fest-MM

RESOLUTION NO. 2026-_____

A RESOLUTION OF THE MAYOR AND VILLAGE COUNCIL OF THE VILLAGE OF PALMETTO BAY, PROCLAIMING "WIENER FEST" AND PROVIDING ACTIVITIES FOR DOGS AND RESIDENTS AT A SPECIAL EVENT AT PERRINE WAYSIDE DOG PARK; TO INVITE PARTICIPATION OF MIAMI-DADE COUNTY ANIMAL SERVICES FOR PET ADOPTION AND EDUCATIONAL OUTREACH; TO PROMOTE THE VILLAGE'S ADOPT-A-PET INITIATIVE; AND PROVIDING FOR AN EFFECTIVE DATE. (*Sponsored by Councilmember Marsha Matson)*

WHEREAS, The Village of Palmetto Bay's Perrine Wayside Dog Park (Dog Park) is ranked as one of the top dog parks in the Miami area by Yelp, Miami Living Magazine, and Miami Magazine; and,

WHEREAS, the Village Council wishes to celebrate the Village's famed Dog Park by sponsoring a special event for residents and their beloved companions, Dachshunds and other dogs; and,

WHEREAS, Dachshunds, affectionately known as "wiener dogs," are among the most recognizable and beloved dog breeds, known for their long bodies, short legs, playful personalities, loyalty, intelligence, and spirited charm; and,

WHEREAS, Dachshunds consistently rank among the most popular dog breeds in the United States, ranking sixth (6th) of 201 dog breeds in 2024 by the American Kennel Club; and,

WHEREAS, Dachshunds' unique physique and energetic temperament make them particularly well-suited for fun, lighthearted competitions such as short-distance "wiener races," low-tunnel agility courses, costume contests, longest-body look-alike contests, best bark competitions, and owner-pet matching contests; and,

WHEREAS, "Wiener Fest" will build community awareness of the Dog Park while offering opportunities for socializing and fun for residents and their furry companions; and,

WHEREAS, "Wiener Fest" will further the Village's commitment to its Adopt-A-Pet initiative by inviting participation of Miami-Dade County Animal Services to promote pet adoption, responsible pet ownership, and volunteer engagement; by increasing public awareness through event publicity and community outreach; and by showcasing the Village's dedication to animal welfare, education, and the humane treatment of companion animals; and,

WHEREAS, the inclusion of a festive hot dog food truck will provide refreshments for attendees and enhance the celebratory atmosphere of "Wiener Fest."

NOW, THEREFORE, BE IT RESOLVED BY THE VILLAGE OF PALMETTO BAY, FLORIDA, THAT:

Section 1. That the above recitals are incorporated as if set forth in full.

Section 2. The Village Council directs the Village Manager to offer a "Wiener Fest" special event at Perrine Wayside Dog Park, preferably on April 18 or April 25, 2026, for dogs and residents, featuring Dachshund-focused activities and contests; to invite participation of Miami-Dade County Animal Services for pet adoption and educational outreach participation; to promote the Village's Adopt-A-Pet initiative; and to facilitate the presence of a hot dog food truck and other appropriate amenities to support the event.

PASSED and **ADOPTED** this 2nd day of March, 2026.

Attest:

_____	_____
Missy Arocha	**Karyn Cunningham**
Village Clerk	**Mayor**

APPROVED AS TO FORM AND LEGAL SUFFICIENCY:

_____
John J. Quick
Village Attorney

VOTE AT ADOPTION:

Council Member Patrick Fiore _____

Council Member Steve Cody _____

Council Member Marsha Matson _____

Vice-Mayor Mark Merwitzer _____

Mayor Karyn Cunningham _____