Utility Special District Meeting
Agenda
Marina Event Center - 190 E. 13th Street
Riviera Beach, FL 33404
This meeting will convene immediately following the Community Redevelopment Agency (CRA) meeting scheduled for 6:00 p.m. or as soon thereafter.
November 23, 2026
6:00 PM

Be advised, that the meeting location is subject to change. The public is encouraged to visit the City's website, www.rivierabch.com, for up to date information on meeting location and information.

Chairperson
Glen Spiritis, Ph.D - District 4

Vice Chair
Fercella Davis-Panier - District 5

Board Members
Bruce Guyton - District 1
KaShamba Miller-Anderson - District 2
Shirley D. Lanier - District 3

Ex-Officio Board Member
Mayor Douglas A. Lawson

Administration
William E. Wilkins, City Manager
Deborah Hall, MMC, District Clerk
Dawn S. Wynn, Esq., District Attorney
Randy Sherman, CPA, CGFO, CTP, District Finance Director

ADA Notice

This meeting is open to the Public. In accordance with the Americans with Disabilities Act of 1990, persons in need of a special accommodation to participate in the proceedings shall contact the Office of the City Clerk at 561-845-4090 no later than 2 days (48 hours) prior to the proceedings.
To request material in accessible format, sign language interpreters, hearing impaired accommodation, or any accommodation to review any document or participate in these proceedings, please contact the Florida Relay Services 1-800- 955-8771 (TDD) or 1-800-955-8770 (voice) for assistance.

Public Comments Information

If anyone wants to speak on an agenda item, please complete a public comment card located at the front desk and give it to the City Clerk staff before the City Council takes up the item for discussion and before the public comments section is announced. In no event will anyone be allowed to submit a comment card to speak on an agenda item after the title of the item is read or considered.

Consent Agenda: Total time allotted for comment on the Consent Agenda to each member of the public is three (3) minutes.

Regular Agenda: Members of the public will be given three (3) minutes to speak on any regular agenda item.

Please note that the time limit for public comment may be reduced by a vote of the City Council based on the voluminous nature of public comment cards.

Civility and Decorum: Please be reminded that the City of Riviera Beach is committed to civility and decorum by its officials, employees, and members of the public who attend this meeting. The City Council has adopted "Rules of Decorum Governing Public Conduct during Official Meetings", which provides in pertinent part:

- Board Members shall be recognized by the Chair and shall not interrupt a speaker.
- Public comment shall be addressed to the Board as a whole and not to any individual on the dais or in the audience.
- Displays of anger, rudeness, ridicule, impatience, lack of respect and personal attacks are strictly prohibited.
- Unauthorized remarks from the audience, stamping of feet, clapping, whistles, yells and similar demonstrations shall not be permitted.
- Offenders may be removed from the meeting.
- Please mute or turn off cell phone at the start of the meeting. Failure to do so may result in being barred from the meeting.

Lobbying - Ordinance 4001 - Adopted September 2011

Lobbyist registration and reporting forms are available for you online and in print. Forms can be obtained in the Office of the City Clerk and Council Chambers. Registration and reporting forms shall be submitted to the Office of the City Clerk.

CALL TO ORDER

Roll Call

Invocation

Pledge of Allegiance

AGENDA Approval
Additions, Deletions, Substitutions

Disclosures

Adoption of Agenda

Comments From the Public on Consent Agenda (Three Minutes Limitation)

CONSENT AGENDA
Routine Board Business. The Consent Agenda is approved by a single majority vote. Items may be removed for open discussion by a request from a Board member or member of staff.

1. Minutes

1.a **August 26, 2026, Utility Special District Board of Directors Budget Meeting Minutes**

Debrah Hall, District Clerk, (561) 845-4090

Staff recommends a Motion to approve the August 26, 2026, Utility Special District Board of Directors Budget Meeting Minutes.
Cover Page
August 26, 2026 Utility Special District Budget Workshop.docx

1.b **August 26, 2026, Utility Special District Board of Directors Meeting Minutes**

Debrah Hall, District Clerk, (561) 983-1710

Staff recommends a Motion to approve the August 26, 2026, Utility Special District Board of Directors Meeting Minutes.
Cover Page
August 26, 2026 Utility Special District Meeting Minutes.pdf

2. Resolutions

2.a **Resolution Number 61-26UD: A Resolution of the Board of Directors of the City of Riviera Beach Utility Special District, Palm Beach County, Florida,**

approving the sole source procurement of SCADA and telemetry system components, software, hardware, and integration services from Badger Meter in an amount not to exceed $50,000.00 from account number 41131103-552000 and 41131104-546000; and authorizing the Utility Special District Finance Director to make payments from account number 41131103-552000 and 41131104-546000 in an amount not to exceed $50,000.00; and providing an effective date.

Joshua Niemann, Utility Special District Executive Director, (561) 845-4185

Staff recommends a Motion to approve Resolution Number 61-26UD.
Cover Page
Resolution Number 61-26UD.docx
Badger Meter Sole Source.pdf
Badger Meter Sole Source Letter.pdf

2.b **Resolution Number 62-26UD: A Resolution of the Board of Directors of the City of Riviera Beach Utility Special District, Palm Beach County, Florida, approving the purchase of Distribution Water Meters from Water Works Metrology, LLC in an amount not to exceed $290,765.31, using a sole source purchasing method from Project Code 27014, water meter infrastructure upgrades; and authorizing the Utility Special District Finance Director to make payments from Project Code 27014 in an amount not to exceed $290,765.31; and providing an effective date.**

Joshua Niemann, Utility Special District Executive Director, (561) 845-4185

Staff recommends a Motion to approve Resolution Number 62-26UD.
Cover Page
Resolution Number 62-26UD.docx
Riviera Beach Large Meters.pdf
Rivera Beach Sole Source Letter.cleaned.pdf
Mueller sole source.pdf

2.c **Resolution Number 51-26UD: A Resolution of the Board of Directors of the City of Riviera Beach Utility Special District, Palm Beach County, Florida, approving the purchase of carbon dioxide from Airgas USA, LLC pursuant to the Southeast Florida Governmental Purchasing Cooperative Group cooperative agreement, ITB26-036, Carbon Dioxide Liquid Bulk Delivery, in an amount not to exceed $120,000.00 from the Water Treatment operating Account Number 41131103-552000, Chemicals for the Water Treatment Plant; authorizing the Utility Special District Finance Director to make payments from the Water Treatment operating Account Number 41131103-552000 in an amount not to exceed $120,000.00; and providing an effective date.**

Joshua Niemann, Utility Special District Executive Director, (561) 845-4185

Staff recommends a Motion to approve Resolution Number 51-26UD.
Cover Page
Resolution Number 51-26UD CO2.docx
COOP agreement.pdf
American Air Liquide Holdings Inc - City of Riviera Beach - 26101637939520 - 26101637939520- 570123815928.pdf

2.d **Resolution Number 77-26UD: A Resolution of the Board of Directors of the City of Riviera Beach Utility Special District, Palm Beach County, Florida, authorizing the use of Piggyback contract from Palm Beach County Contract No. SS200426C for the purchase of Endress+Hauser Products, OEM Parts, Repair Services, Field Services, and Chemical Feed System Preventative Maintenance Services from TriNova, Inc. in an amount not to exceed $33,098.47 from Account Number 41131103-546000; and authorizing the Utility Special District Finance Director to make payments from Account Number 41131103-546000 in an amount not to exceed $33,098.47; and providing an effective date.**

Joshua Niemann, Utility Special District Executive Director, (561) 845-4185

Staff recommends a Motion to approve Resolution Number 77-26UD.
Cover Page
Resolution_Number_77-26UD.docx
Riviera Beach - Chemical Feed Contract - Q1421442 - 11.06.26.cleaned.pdf
SS200426C - AWARD LETTER.pdf
SS650563B - AWARD LETTER.pdf

END OF CONSENT AGENDA

3. Unfinished Business

Petitions and Communications for filing

4. Awards and Presentations

4.a **Presentations of Updates on Utility Special District Projects**

Joshua Niemann, Utility Special District Executive Director, (561) 845-4185

Staff recommends that the Mayor and USD Board members receive these Presentations.
Cover Page
Brown and Caldwell Owners Rep Update 11-2-26.pdf

Haskell-CDM Smith_JV Update_November 2026.pdf
Globaltech_Wellfield Rehab Proj_Update_11032026.pdf

5. Public Hearings

COMMENTS FROM THE PUBLIC - 6:30 PM Non-Agenda Item Speakers (Three Minute Limitation)

Public Comments shall begin at 6:30 PM unless there is no further business of the Board, which in that event, it shall begin sooner. In addition, if an item is being considered at 6:30 PM, then comments from the public shall begin immediately after the item has been concluded.

6. Items Tabled

REGULAR AGENDA

7. Resolutions on Regular Agenda

7.a **Resolution Number 66-26UD: A Resolution of the Board of Directors of the City of Riviera Beach Utility Special District, Palm Beach County, Florida, awarding the Invitation to Bid (ITB) 26-018 for Aerial Crossings Rehabilitation to Razorback, LLC. in an amount not to exceed $690,858.00 from the capital infrastructure Account Number 41231104-563000, and authorizing the Utility Special District Finance Director to make payments from the capital infrastructure Account Number 41231104-563000 in an amount not to exceed $690,858.00; authorizing the Utility Special District Executive Director to approve change orders up to 10%; and providing an effective date.**

Joshua Niemann, Utility Special District Executive Director, (561) 845-4185

Staff recommends a Motion to approve Resolution Number 66-26UD

Cover Page
Resolution Number 66-26UD.docx
26-018 Award Recommendation Memo.cleaned.pdf
26-018_Bid Tabulation Form.pdf
26-018 Notice of Intent to Award Letter.cleaned.pdf
26-018 Razorback Contract.docx
26-018 Responsiveness Review.xlsx

7.b **Resolution Number 76-26UD: A Resolution of the Board of Directors of the City of Riviera Beach Utility Special District, Palm Beach County, Florida, authorizing the use of Polk County Continuing Solicitation CS #25-303, Plumbing Equipment, Fixtures, and Supplies, for the replacement of the Fine Grit Classifier Auger at the Water Treatment Plant with BAR Environmental, Inc. in an amount not to exceed $44,985.00 from Account**

Number 41131103-546000; and authorizing the Utility Special District Finance Director to make payments from Account Number 41131103-546000 in an amount not to exceed $44,985.00; and providing an effective date.

Joshua Niemann, Utility Special District Executive Director, (561) 845-4185

Staff recommends a Motion to approve Resolution Number 76-26UD.
Cover Page
Resolution_Number_76-26UD.docx
Estimate_DR1020261_from_BAR_Environmental_Supply_Inc.pdf
ACORD Form 20261014-131108.pdf
Polk Co Contract CS 25303.pdf
PBA_25_26-215_BAR_Environmental.cleaned.pdf (SECURED).pdf

7.c **Resolution Number 72-26UD: A Resolution of the Board of Directors of the City of Riviera Beach Utility Special District, Palm Beach County, Florida, approving the purchase of one (1) John Deere 410P Backhoe Loader from Dobbs Equipment, LLC utilizing Florida Sheriffs Association Cooperative Purchasing Program Contract No. FSA26-EQU24.0, Equipment, in an amount not to exceed $187,252.25; authorizing the Utility Special District Finance Director to make payments from Account Number 41131101-564000 in an amount not to exceed $187,252.25; and providing an effective date.**

Joshua Niemann, Utility Special District Executive Director, (561) 845-4185

Staff recommends a Motion to approve Resolution Number 72-26UD.
Cover Page
Resolution Number 72-26UD Dobbs.docx
Riviera Beach 27 410P Cab 1.31MP Cpl Front Forks and rear ext with 24 inch 10-20-26.doc
FSA26-EQU24.0-Equipment-Final-Award-Packet.pdf
JD 410P Backhoe Gen B 8-25.pdf
Loader_Backhoe_-_4x4_JD_310P_Stated_Options_2026.pdf
234_Build_Sheet.pdf

7.d **Resolution Number 78-26UD: A Resolution of the Board of Directors of the City of Riviera Beach Utility Special District, Palm Beach County, Florida, approving the purchase of one (1) Vac-Con Sewer Combination Cleaner Model VPD4215LA/1500 from SSES Inc. d/b/a Southern Sewer Equipment Sales utilizing Florida Sheriffs Association Cooperative Purchasing Program Contract No. FSA26-EQU24.0, Equipment, in an amount not to exceed $662,308.00; authorizing the Utility Special District Finance Director to make payments from Account Numbers 41131101-564000 and 41131104-564000 in an amount not to exceed $662,308.00; and providing an effective date.**

Joshua Niemann, Utility Special District Executive Director, (561) 845-4185

Staff recommends a Motion to approve Resolution Number 78-26UD.
Cover Page
Resolution Number 78-26UD Southern Sewer.docx
Riviera Beach Vac-Con DEPD FSA quote 10-21-2026.pdf
Item 417 Vac-Con VPD4210SA1000 Options.pdf
FSA26-EQU24.0-Equipment-Final-Award-Packet.pdf
Vac-Con 417 VPD4210SA1000 Award Report (Oct 1, 2026).cleaned.pdf

8. Discussion and Deliberation

8.a **Discussion of the Utility Special District, Board of Directors yearly salaries**

Joshua Niemann, Utility Special District Executive Director, (561) 845-4185

It is recommended that the Mayor and Utility Special District Board have a discussion regarding the yearly salaries of the Board of Directors.
Cover Page

8.b **Discussion of the Mayor and The Utility Special District Board of Directors regarding the exceedance of approved purchase order amount by US Water Corporation**

Joshua Niemann, Utility Special District Executive Director, 561-845-4185

It is recommended that the Mayor and Utility Special District Board have a discussion regarding the exceedance of approved purchase order amounts by US Water Corporation for the site evaluation, management, and maintenance of the Utility Special District administration, water treatment plant, distribution system, and collection system.
Cover Page
USW - RBUSD Project Funding Variance - November 2026.pdf

9. Confirmation of Direction

10. Discussion by City Manager/Executive Director

11. Discussion by District Attorney

12. Statements by the Mayor and Board

ADJOURNMENT

Appeals

If any interested person desires to appeal any decision of the Board with respect to any matter considered at this meeting, at his or her own expense, that person will need a record of the proceedings and for such purpose may need to ensure that a verbatim record of the proceedings is made, which record includes the testimony and evidence upon which the appeal is to be based, pursuant to Section 286.0105, F.S. The City of Riviera Beach does not prepare or provide such a record.

Riviera Beach - Utility Special District

To:	Honorable Mayor, Chairperson, and Utility Special District Board
From:	Debrah Hall, District Clerk
Through:	William E. Wilkins, City Manager
Subject:	**August 26, 2026, Utility Special District Board of Directors Budget Meeting Minutes**
Date:	November 23, 2026
CC:	General Public

Background:
Attached you will find the August 26, 2026, Utility Special District Board of Directors Budget Meeting Minutes.

City Goals:
The Citywide Goal is to Enhance Government Stewardship.

Fiscal/Budget Impact:
There is no fiscal impact.

Recommendation:
Staff recommends a Motion to approve the August 26, 2026, Utility Special District Board of Directors Budget Meeting Minutes.

Attachments:
1. August 26, 2026 Utility Special District Budget Workshop.docx

UTILITY SPECIAL DISTRICT
BUDGET WORKSHOP
August 26, 2026
5:30 p.m.

Chairperson

Glen Spiritis.....Chairperson Spiritis
District 4

Vice Chair

Fercella Davis Panier.....Vice Chair Davis Panier
District 5

Board Members

Bruce Guyton .....Board Member Guyton
District 1

KaShamba Miller-Anderson.....Board Member Miller-Anderson
District 2

Shirley D. Lanier.....Board Member Lanier
District 3

Ex Officio Board Member

Douglas A. Lawson.....Mayor Lawson

Administration

William E. Wilkins – City Manager

Debrah Hall –District Clerk

Dawn Wynn – District Attorney

Randy Sherman - District Finance Director

Transcribed by:

Legal Transcription On Call
(561) 917-1636

[Before meeting discussions]

[Gavel]

I. ITEM NO. I

CALL TO ORDER

Chairperson Spiritis: Good evening, everybody. Welcome to the Utility District Budget Meeting tonight, Budget Workshop.

It is.., we are in the Marina Event Center. And, it is August 26, 2026.

It's 5:30 p.m.

II. ITEM NO. I

ROLL CALL

Chairperson Spiritis: Roll call.

District Clerk Hall: Chairperson Dr. Glen Spiritis?

Chairperson Spiritis: Here.

District Clerk Hall: Vice Chair Fercella Davis Panier?

Vice Chair Davis Panier: Here.

District Clerk Hall: Board Member Bruce Guyton?

Board Member Guyton: Here.

District Clerk Hall: Board Member KaShamba Miller-Anderson?

Board Member Miller-Anderson: [Absent].

District Clerk Hall: Board Member Shirley Lanier?

Board Member Lanier: [Absent].

District Clerk Hall: *Ex officio* Board Member Mayor Douglas Lawson?

Mayor Lawson: [Absent].

District Clerk Hall: In for City Manager William Wilkins is Assistant City Manager Kevin Copin?

Assistant City Manager Copin: Here.

District Clerk Hall: District Clerk Debrah Hall is present.

District Attorney Dawn Wynn?

Assistant City Attorney Tracey: Jason Tracey for her. Here.

Board Member Guyton: Speak into the mic.

Assistant City Attorney Tracey: Jason Tracey for Dawn Wynn.

Here.

District Clerk Hall: District Finance Director Randy Sherman?

District Finance Director Sherman: Here.

District Clerk Hall: Mr. Chair, you may proceed.

Chairperson Spiritis: Okay.

III. ITEM NO. III

INVOCATION AND PLEDGE OF ALLEGIANCE

Chairperson Spiritis: We'll have the Invocation and, the Pledge of Allegiance led by the Vice Chair Fercella Davis Panier.

[Moment of silence]

Vice Chair Davis Panier: I pledge allegiance…

All: …to the Flag of the United States of America, and to the Republic for which it stands, one nation under God, indivisible with liberty and justice for all.

V. ITEM NO. V

FY 2027 – BUDGET OVERVIEW AND DISCUSSION

Chairperson Spiritis: City Managers, Executive Director, you wanna start the meeting, please?

Executive Director Niemann: Yes, sir.

Good.., good evening, Mr. Chair, Vice Chair, Board of Directors. Josh Niemann, Executive Director of the Utility Special District.

Tonight, we'll be presenting the FY '27 operating budget for the Utility.

I'll jump right into it and, as we get through, please feel free to ask questions as we may and stop me if you need any questions answered.

Va. <u>ITEM NO. VA</u>

FY 2027 BUDGET OVERVIEW AND DISCUSSION PRESENTATION

RANDY M. SHERMAN, CHIEF FINANCIAL OFFICER, CPA, CGFO, CTP, (561) 845-4045

Executive Director Niemann: So, starting with the Utility District, we're broken into four separate divisions within the Utility District.

We have Administration, Distribution, which is our.., all of the water lines within the City. Some of those water lines do go outside of the City boundaries into some of the unincorporated areas of West Palm Beach, your 45th and Gramercy Park.

We have our water plant. Currently, we have the water plant that's located on Blue Heron, near City Hall and we are also in the process of erecting a new water plant at the Avenue L site.

And then, we have our Wastewater Collection Division.

Moving on into the budget. Some of our FY 27 goals, we're gonna be strengthening our cross connection control plan. When we started.., or, when I started, the City was lacking an Ordinance to be able to support the cross connection control plan.

This Board took action in May of 2026 to pass an Ordinance to start enforcing that. At that time, we found out that we had about twenty-seven percent of the City back flows in compliance.

Since then, the.., over the past three months, the Utility sent.., or sent out roughly 2,500 letters and we're working very closely with the Department of Health to make sure that we hit our ninety percent mark that we're required to year over year.

Secondly, is planned exercising of all the valves within the City. Currently, we're gonna be targeting ninety to a hundred percent of each of all the valves, which is a requirement for maintenance for our distribution system.

Within those valves that we identify, twenty percent of the valves and hydrants will be replaced year over year until we've had a five year period where anything that's been broken is replaced or repaired.

We're also gonna be reducing some of our water quality complaints, chlorine residuals, pressure issues, discoloration, and taste and odor. We've been working very closely with residents over the past month, installing pressure gauges at various locations throughout the City.

Specifically, when we get notifications that we have low pressures, we deploy those devices. And then, through some operational [stammer] inefficiencies, we rectify those and really can optimize the pressures within those areas.

We've started doing that on the Island, we starting doing that out west, and we'll continue to do that throughout the next Fiscal Year.

And then, I think the most important is reduce our water loss, and our nonrevenue generated water that we.., we don't end up selling. So, just like with any business or any factory,

you wanna reduce the amount of loss that you have. And, currently, the Utility experiences about thirty-five to forty percent loss.

We have already started changing out all of the flow meters within the wells. We've certified and verified all of the well'.., or, all of the flow meters at the water treatment plant and then, calibrated those on a mo'.., a yearly basis to make sure they maintain the accurate flows that they are supposed to.

Moving into some of our reductions in the '27 budget year. I will be re'.., requesting a tot'.., net total of six less employees. When I started, I had asked for about eight additional employees.

After working here for about fourteen months, I realized that some of those employees really are not necessary. A lot of the items that we may may end up.., would've ended up doing, are items that happen on a very infrequent period and, therefore, we can contract it out at a much cheaper price than having a full time employee working for the Utility.

Some of those positions include a senior engineer, electrical and automation superintendent, an instrumentation technician, one wastewater maintenance mechanic, one water distribution maintenance mechanic, lead electrician, three valve and hydrant mechanics, and then, one project manager.

One special note that I wanna [inaudible] with the reduction in staffing levels. Most Utilities have anywhere from ten to fifteen engineering staff members within their engineering department within the Utility.

And they do a broad thing.., amount of work, from doing locates that are required through the eight one.., the Florida Sunshine 811 hotline, reviewing as-builts, signing off on building plans, verifying that the developments that are being brought to the City comply with

the standards of the Utility but also making sure that we have enough water and wastewater services to provide those developments with the necessary infrastructure.

And so, with that, I will be requesting the reclassification of one laboratory technician to a senior laboratory technician. I think it's very critical to have a career track and ladder for most of our employees.

And, in our laboratory technicians, we.., right now, we only have lab techs. And so, by having the senior lab tech, it gives our lab techs an opportunity to transition into a.., a higher responsibility position.

I'll also be requesting reclassification of our Assistant Director to Deputy Executive Director.

And then, as far as new positions, I will be requesting one budget analyst. My hopes with that is for contract administration, grant and budget tracking. We recognize that the rates are considerable within the Utility.

And so, tracking down every free dollar that we can get is critical. So, I believe having someone within the Utility that their sole responsibility, or vast majority of their responsibilities, are tracking down those free dollars, is gonna be critical to reducing the rates within the Utility.

A Utility technical assistant. We currently get anywhere from sixty to a hundred locate tickets on a weekly basis. And, if we don't go out there within forty-eight hours, we could end up being in charge of damages, or responsible for paying for damages, if a contractor hits it.

We've had several incidences over the last few weeks where a contractor will be doing a directorial bury job and they'll hit one of our water lines. Now, for the most part, our locate Staff has been fantastic, and there's only one of them, but this Assistant will be able to help with those locates and make.., make sure that we're maintaining all of the locates in a timely fashion.

And then lastly, it will be.., my last request is gonna be asking for an additional assistant director of operations. Therefore, I'll have an assistant director or deputy director over engineering, and then a assistant director over all of the operations.

Moving onto some of our budget cuts for the Fiscal Year 2027. I recognize in our administrative costs, most of those Staff are salaried individuals. And so, having overtime in that line item just didn't make sense.

There are two individuals that do work in that administrative envelope and, therefore, we're gonna be reducing that by about $10,000.

Contract administration services, I've requested a.., written that reduction of seven poi'.., or three quarters of a million dollars. And, the reason for that is, we have so many projects that are already in design.

And, there is no reason to continue designing projects that we don't have funding for. And, what we need to do is, first, get the projects that we have designed, completed and then, in FY 28, we'll revisit what we have done and what we have left, and then identify additional projects.

We've redu'.., reduced our contingency amount in the Administration section from $2 million to $1 million. And then, our wastewater contract services by $1.5 million.

So, in operating, we have a net reduction of just over $2 million. And then, you will see up there that we have a transfer out which is the $20 million figure. That figure reflects what is paid into for transfers for our R&R, our debt services, and then also, what the City.., what we are required to pay the City for their services, for the City Attorney, for Finance, for some of the Human Resources. All of those different departments that we utilize, we.., we also pay for.

So, that's what that figure nets.

And then, as far as capital costs for the Fiscal Year 2027, as you can see, there's no ma'.., major projects up there. We do need a new vacuum truck for our distribution Staff. The one that they are currently operating is about fifteen years old.

We will continue to utilize that but it'll be our third one. And then, my last recommendation, or consideration, would be a new backhoe. That also is about fifteen years old.

And so, our hopes are to get new equipment in, keep the old stuff in case we have major emergencies. But, we have two different divisions, to do.., do [stammer] entirely separate things but it is critical to be able to have the equipment for the Staff to be able to do the job, and as quickly as they can.

With that, I'd be happy to answer any questions and go over any of the items that I've gone over with you.

Chairperson Spiritis: Any.., any questions from the Board?

Board Member Guyton: Yes.

Mr. Chair?

Chairperson Spiritis: Commissioner Guyton.

Board Member Guyton: Mr. Niemann, you mentioned early in your presentation about a backflow requirement. And, you mentioned a percentage at ninety percent.

Did I understand that correctly?

Executive Director Niemann: Yes, sir.

Board Member Guyton: And, did.., did you also say that we are not meeting that requirement right now?

Executive Director Niemann: No, sir.

We are.., we are at 27.2 percent of the requirement. And.., and so, these are one of those requirements, the backflow is privately owned. And so, the Utility itself cannot go in there and do anything until we had passed the Ordinance.

Now that we have that Ordinance, there's actually items that we can do. The first one is sending this letter out. Once they get that letter, they have ninety days to.., to get that backflow certified.

Board Member Guyton: Okay. Wait, wait. 'Cause, we.., we have a lot to go through tonight.

My question was, are we meeting that ninety percent requirement?

Executive Director Niemann: No.

Board Member Guyton: We are not?

Executive Director Niemann: No.

Board Member Guyton: And, why not?

Executive Director Niemann: Because the backflows are privately owned and we have to incentivize the owners to certify them.

Board Member Guyton: What.., are we facing any type of penalty for not meeting that requirement?

Executive Director Niemann: No.

Quite the opposite. We've been working very closely with the Department of Health. They had requested that we have monthly meetings with them but because the amount of backflows that are necessary to get certified at this time, they've actually reconsidered and are allowing us to do quarterly updates with them, which will allow the plumbers and the certifiers to go out there and do the work that needs to be done on all these backflows.

We currently estimate…

Board Member Guyton: So...

Executive Director Niemann: …only six hundred and eighty out of 2,500…

Board Member Guyton: Okay.

Executive Director Niemann: …has been completed.

Board Member Guyton: Okay.

When.., when I ask a question, kinda keep it short.

Executive Director Niemann: Yes, sir.

Board Member Guyton: A minute, two. We've got a lot to deal with.

The quality of water. There's a industry level. We've had this discussion before. Where are we in regards to meeting the industry acceptable level of our quality of our water.

Executive Director Niemann: We exceed all ML'.., MCL's which are maximum contaminant levels in our water for every single item that we have that.., that is measured.

Board Member Guyton: Okay.

Number wise, where are we on that scale?

Executive Director Niemann: I'll give you a good example.

Color, it goes ze'.., from zero all the way up to a hundred. We generally send colors out that are around ten. When we have our new plant, we'll send colors out closer to two. But, a conventional lime softening plant averages about fourteen.

Board Member Guyton: And we're at where?

Executive Director Niemann: We generally send numbers in the.., around ten to twelve.

Board Member Guyton: And, what is it that we need to do to increase our level of that?

Is it a chemical mix or what? Why.., why aren't we closer to the fourteen?

Executive Director Niemann: No.

So, we wanna be as close to zero as possible.

Board Member Guyton: Zero.

I'm sorry.

Executive Director Niemann: Yes, sir.

And.., and really, it just comes down to the.., the fact that we run a conventional lime softening plant. Any lime softening plant, the genuine number, if you can hit a ten, those are very good numbers.

District Clerk Hall: Mr. Chair?

Please let the record reflect that Mayor Douglas Lawson is present.

Chairperson Spiritis: Yes.

Thank you.

Board Member Guyton: Okay.

I think that, two, the quality of our water is.., is not of.., one of the.., the main issue that we get complaints on. And, whatever we need to do to try to increase that quality, and not be comfortable with that's.., that's an acceptable level in the industry at ten.

No. We need to work to get it better. And I would.., and, I would like to see a plan of how we plan to do that instead of getting comfortable at the level where we are. Okay?

My.., my next question. Do we have a supervisor on each shift?

Executive Director Niemann: So, it depends on what division you're speaking about.

Within our water and distribution, yes, the supervisor's on each shift. There is only one shift they work Monday through Friday. For our water treatment plant, we do have a supervisor or a lead on each shift but those lead positions, we've been unable to fulfill at this time.

We've had them advertised several different times and have not gotten good in'.., any great candidates.

Board Member Guyton: So, do we have anyone who.., who are stepping in until someone is hired?

Who is.., who is playing the lead until you hire a lead?

Executive Director Niemann: My Water Plant Manager.

Board Member Guyton: And, the water plant…

We.., we… The Water Plant Manager on each shift?

Executive Director Niemann: No.

So, he.., he's there Monday through Friday but really it's become a.., a twenty-four hour/seven day a week job, taking phone calls at all hours of the night and.., and any day of the week to make sure that if an operator has a question, we can answer it for them.

Board Member Guyton: How many shifts do we have?

Executive Director Niemann: We have three different shifts.

They run on ten hour shifts.

Board Member Guyton: And the lead is only there during the day?

Executive Director Niemann: No.

So, we currently have the lead and the lead is supposed to be on each shift. So, therefore, five days out of the week, you would be able to lead that one specific shift.

Board Member Guyton: Yeah. I know.

But, okay. You said he's supposed to be but what do we have? That's where I'm trying to get.

Executive Director Niemann: Yeah.

We don't. So...

Board Member Guyton: We don't have a lead?

Executive Director Niemann: We do not have a lead.

Board Member Guyton: And, why's that?

Executive Director Niemann: Because, we've been advertising those positions and we have been unable to fill them.

Board Member Guyton: And, we have nobody filling that slot right now?

Executive Director Niemann: Correct.

So, these were new positions added as part of my FY 26 budget request.

Mhmm.

Executive Director Niemann: And so, we've been transitioning until we get these positions filled.

But, it has been very difficult to fulfill those positions. We're looking for high level operators with A level, which means at least five years in the industry.

We're also looking for individuals that have RO and membrane experience as we get closer and closer to transferring over to the new plant.

Board Member Guyton: So.., so, it's the lead… [Pause].

And, I just asked this question, maybe I need to ask it different. Now, the lead help navigate problems.

Is that correct?

Executive Director Niemann: Yes, sir.

Board Member Guyton: Yes.

So, when the plant manager's not there and we have no lead, who's helping at a supervisory level to navigate those problems?

Executive Director Niemann: Well, I think I can.., I can sum this up for you.

So, as licensed operators, all the operators are able to make any decision. What our leads are there for are, let's say that there's a problem on a shift and each of the two operators that are there have different opinions on how to fix them.

The lead would be the one that would make the ultimate decision on how to fix that cor'.., or, make that correction. Currently, the two just work together and say hey, this is the best way. Alright, yeah, I think that's the right way and we make that decision.

If it comes to something that is super critical, like I said, those phone calls get.., go out to myself and to the Water Plant Manager to make sure that we can answer those questions for them.

Board Member Guyton: Okay.

I think that we need to put more effort into ensuring that we have adequate Staff to deal with issues that come up at our water plant. The.., the residents are depending on that.

My last question. We've been talking about, the entire Board, about mitigating the impact on the residents from the cost of this plant. Staff, Mr. Sherman, and I think the City Attorney, and they was gonna get with the bond attorney.

Have you all come up with anything to help mitigate the impact on our residents? Water rate's going up on a average thirty percent every year and some seem to dismiss it as it is what it is. That's not me. I'm not dismissing it as it is what it is.

‘Cause I get the phone calls with people crying now, they can’t pay their water bills. And, whoever thought about this five year plan and over a hundred and twenty percent, they were not thinking about the residents of this community.

Blue collar, low to middle income. And, those decisions that were made in that previous Administration, now we got to deal with them. Now, those rates are just escalating, escalating, escalating.

So, I wanna know, has a plan come up? Or has anybody come up with a plan to mitigate the cost?

And.., and, Mr. Sherman, would you come to the mic? That’s.., you’re.., you’re our Finance guy.

Executive Director Niemann: Councilman, if I may?

Board Member Guyton: Yes.

As he come up.

Executive Director Niemann: So, I.., I.., I don’t wanna speak for the other departments but I can tell you from an operational perspective, I believe that by making the water plant more efficient, reducing our water loss, changing out these meters to make sure we’re capturing every bit of water that is treated, and making sure that it’s actually being, you know, the.., the funds are being redelivered back to the City, we can reduce the overall amount that…

Board Member Guyton: [Inaudible].

Executive Director Niemann: …our residents are paying.

I.., I hear the exact same cries that you hear about how high our rates are. I looked at them, you know, and.., and I recognize that this new plant is a colossal of a project and is extremely expensive.

And so, we have to do everything we can to A, be the most effective and efficient thing we can do and that's really, from an operational perspective, we think that'll have a drastic impact on our ability, in the coming rate.., when we do do another rate study, to reduce it.

Board Member Guyton: Okay.

Yeah. Operationally, we do have to run as efficiently as we can.

Mr. Sherman, have you looked into how we can mitigate the impact on our residents?

District Finance Director Sherman: Yeah. Again, Randy Sherman, District Finance Director.

So, we have... I mean, we've looked at a number of national reports, we looked at what others have attempted to do. But, it really, as Mr. Niemann said, it really starts here at home. If we can, you know, bill out ten percent of the water that we're.., we're currently losing, you know, for unaccounted for water, that's a big issue.

What we're working on in the Finance Department at this point, is obviously getting this debt issued at as low a cost as possible, which is why we worked so hard with the SRF. We're working with Assistant City Manager Jacobs to try to.., come in through legislative avenues, to try to get some further assistance, working with CDM to try to get some additional grants. You know, we're working at all of those.., those issues at this time.

What I recommended to the Manager the other day is, I said, once.., once we get these.., the borrowing done, right, and we get GMP7 done, we've kinda locked in our cost, we've locked in our cost to capital, and it really is at that point, the time to do another rate study.

And again, bring somebody in, hopefully again, our.., our usage, you know, is.., is the right usage, our meters are.., are working properly. And again, that's the time to start looking at that.

Now remember, they have.., they.., they worked with 2024 data, ‘cause the rates were adopted during ’25. So, they looked at 2024 data. So, already we have ’25-’26 data that can be used and include it in the next analysis.

They only went out to 2030, so now again, we’d be looking out further than that and actually getting into the time period when you're operating a new plant.

And again, the way this plant was designed and selected, really was ‘cause operational costs will be less.

So, it’s an opportunity now for us to go back and.., and look at those.., those issues.

Board Member Guyton: Has… And this is my last question.

Has Finance looked at restructuring the deal so that it won’t be so compressed and compact on our residents, where we have to charge them thirty percent every year to get to that hundred and twenty percent?

District Finance Director Sherman: Yeah.

And, remember, when we were back.., we were here in.., in June I believe, with the way this deal is going to be structured, that’s why we have the fixed rate debt, we have variable rate debt, and we also have the SRF rate debt. And, that’s what got us to the lowest cost of capital at that point.

By using the SRF, the way that we are going to structure with SRF is, all of those payments get deferred until the plant actually opens. So, when we look at that, what that’s doing is, that’s reducing the.., the amount of the annual payment in the early years.

Now again, you have to pay interest on that but, again, using the SRF interest, that’s the lowest cost of capital.

Board Member Guyton: Okay.

Let me ask this. You said that some of the payments will be deferred. But, the residents are still being hit every year with an increase. That's.., that's what I'm talking about.

District Finance Director Sherman: Well, that.., that's why.., I'm saying, recommending that…

Now that we know what the deal structure is, that's not the same assumptions that we used when the rates were originally done. So, now that we know what the deal structure's gonna be, do the rate study again.

And again, part of when you do the rate study is, you're also looking at is it going to the resident? Is it going to the business sector? You know? And allocating out the cost. Keep in mind that legislation did pass this year doing away with the surcharge.

So, as Mr. Niemann said, we do provide services outside of the City limits. Okay? And, we charge a twenty-five percent surcharge. That statute has changed and that surcharge goes away. So, that's actually gonna add more cost on the outside.

But again, none of that was known in 2024 when the study was done.

Board Member Guyton: So, when are we doing the [stammer] a study again?

District Finance Director Sherman: So again, I think we should…

Board Member Guyton: Just...

District Finance Director Sherman: …be pr'…

We should be pricing the bonds next month.

Board Member Guyton: Okay.

District Finance Director Sherman: So, we'll.., we'll know what our costs are.

And then, I think in October when.., Ms. Ammons is here so we can kinda put Procurement on notice, I think in October we should be ready to get back out on the street, get another rate study going.

By the time you get somebody in, they'll have '25, '26, and maybe even half of '27 information to be able to, you know, realign. And again, if the consumption charges are.., or, if the usage has changed because we've got the, you know, a better system at the District, that all comes into play.

Board Member Guyton: Thank you, Mr. Chair.

Chairperson Spiritis: Okay.

Vice Chair Davis Panier: Chair?

Two quick…

Chairperson Spiritis: Commissioner…

Vice Chair Davis Panier: …questions.

Chairperson Spiritis: Vice Chair.

Vice Chair Davis Panier: Thank you.

So, that's why, I guess, it's very important, the person that you hire for this budget analyst because you spoke about that person would.., would be responsible for trying to get money, get grants.

Is that correct?

Executive Director Niemann: Yes, ma'am.

I know the City currently has a legislative opening but until that position is opening, somebody has to be doing that. And so, we believe that having that budget analyst to start that for the Utility is critical to reducing rates.

Vice Chair Davis Panier: Is there anyone currently doing it [inaudible]?

Executive Director Niemann: You're looking at him.

Vice Chair Davis Panier: Okay. Alright.

So, yes. That's a very important position.

And then, follow up to my colleague, Councilman Guy'.., Guyton. So within our Utility District there are no other employees, at this time, that are qualified for the lead?

Executive Director Niemann: So we…

Vice Chair Davis Panier: [Inaudible].

Executive Director Niemann: …do…

We do have eight licensed operators there.

Vice Chair Davis Panier: Mhmm.

Executive Director Niemann: Two of them actually were invited for interviews and we found that the interviews weren't to the quality that we would expect.

Now, we.., we are starting to do robust training, not only on the existing plant but the.., the future plant. And so, we do plan on putting those back out on the street and.., and my hopes are some of those same people that applied before, apply again because now they understand, really, what is necessary to.., to do the job as an operator.

One other item that I'd like to make mention…

Chairperson Spiritis: I have...

Hold on one second…

Executive Director Niemann: Okay.

Chairperson Spiritis: …Director.

I just wanna, for the record, that Commissioner Lanier is here and present at the meeting. [Inaudible comment]

Executive Director Niemann: One other item that I would like to.., to mention, which I think is a.., a huge success for the City.

In.., in Fiscal Year 2025, the Utility Special District spent over $1.4 million buying water from Seacoast, our neighboring Utility, through an emergency interconnect.

In Fiscal Year 2025, we spent less than $30,000. So, we generally, probably, re'.., gain about forty cents on the dollar for every one of those $1.4 million. So, that right there is a huge net savings, and.., and treating it.., our own water and selling our own water to our residents.

So, we are really turning it around and making it more efficient to the point where we don't even bother.., or, buy water anymore, and that's a huge.., huge win for us.

Chairperson Spiritis: Excuse me.

Just for the record, Commissioner Miller-Anderson is present.

Vice Chair Davis Panier: Well…

Chairperson Spiritis: Any other que'…

Go ahead. You wanna follow up?

Vice Chair Davis Panier: Just wanna say, well, I think what you're saying is very important that you work with what we have.

And, if we do anymore training, advancing our current employees should be a priority.

Executive Director Niemann: Yes, ma'am.

Vice Chair Davis Panier: Mhmm.

Board Member Lanier: Chair?

Chairperson Spiritis: Board Member, you finished?

Okay.

Yes. Commissioner…

Board Member Lanier: I'm., I'm…

Chairperson Spiritis: …Lanier.

Board Member Lanier: …confused about the time.

Me and my colleague thought it was at 6:00 o'clock. And then also too, it's advertised at 5:30 for the meeting and 6:00 o'clock for the budget workshop. So, I'm very confused as to what's happening right now.

I.., I did not know that we had confirmed that it would be 6:00 o'clock becau'.., I mean, 5:30 because I.., my understanding was that, at 6:00 o'clock, it would be for a Utility District because it was on a whole separate day.

And now, it's all mixed around. And especially that you advertised this as being the actual meeting now, and then the workshop after that. So, I'm really kinda confused here. I.., I.., I don't remember voting on a 5:30 meeting date for the Utility District, especially when we changed the days for it.

Board Member Guyton: We did.

Chairperson Spiritis: Yeah.

I believe at the last meeting we agreed that we were gonna have the Utility District budget meeting at 5:30.

Board Member Guyton: Yeah.

Chairperson Spiritis: And then, we would have the Utility District meeting directly after.

And then, if we had time after that, we were gonna finish up the City's workshop, budget workshop for…

Board Member Lanier: When was that decided?

Chairperson Spiritis: We had three more departments, I believe that…

Board Member Lanier: When.., when was that decided?

Chairperson Spiritis: At the last meeting.

Board Member Guyton: At our last meeting.

[Inaudible comment]

Board Member Lanier: Last night?

Board Member Guyton: Monday.

Chairperson Spiritis: Monday.

Board Member Lanier: No. No. Uh-uh.

I was here Monday.

[Inaudible comments]

Board Member Lanier: I was here.

[Inaudible comment]

Board Member Guyton: Well, we.., we discussed it and…

[Inaudible comment]

Chairperson Spiritis: We agreed to that.

That.., we agreed to it…

Board Member Lanier: So…

Chairperson Spiritis: …and we…

Board Member Lanier: …if.., if that's the…

Chairperson Spiritis: And we advertised it that way.

[Inaudible comment]

Board Member Lanier: Okay.

So, if that's case, so why is it that you advertised the budget meeting to start at 6:00 and the meeting to start at 5:30?

Chairperson Spiritis: No. We agreed that it was gonna be.., 5:30 was gonna be…

District Clerk Hall: It was advertised…

Chairperson Spiritis: …the budget meeting.

Board Member Lanier: But, it's not…

District Clerk Hall: The budget was advertised...

Board Member Lanier: …advertised that way.

District Clerk Hall: …at 5:30.

Chairperson Spiritis: Excuse me.

Clerk?

District Clerk Hall: 5:30.

The budget was for 5:30, and the Utility Special District meeting was advertised for 6:00.

Board Member Lanier: That's not what it looks on here.

But, this… We should get a notice or something. Because, this was not what I expected. I had questions for the Utility District in terms of the budget. And now I've missed…

[Inaudible comment]

Board Member Lanier: …thirty minutes…

Chairperson Spiritis: [Inaudible].

Board Member Lanier: …because I'm thinking that the meeting's at 6:00 o'clock.

Chairperson Spiritis: He didn't…

Board Member Lanier: It's not just me.

[Inaudible comment]

Chairperson Spiritis: Commissioner, you could ask any question you want concerning the budget right now.

[Inaudible comment]

Board Member Lanier: They said Monday.

Chairperson Spiritis: So, Commissioner, you have any questions concerning the budget?

Board Member Lanier: I do have questions.

Chairperson Spiritis: So…

Board Member Lanier: But, let me get myself together here.

Chairperson Spiritis: Okay.

While we're waiting, I'll.., I'll respond to some of the other statements that were made. As we all know, the water plant should've been open and operating probably in 2023. We waited too long to get this plant built.

We know that construction costs, just in the last couple years, went from a hundred and eighty dollars a square foot to three fifty. So, that's why we're spending $400 million instead of $200 million.

So, we are where everybody else is at this time in construction costs. So that, unfortunately, is impacting our water fees.

Wh'.., I have a question to the Finance Director Sherman. We talked about business fees, commercial fees, and residential fees. When was the last time we studied what those fees should be and.., and made adjustments?

District Finance Director Sherman: So, the study began in 2023.

It wrapped up in December of 2024, and it was voted on in January of '25.

Chairperson Spiritis: So, we did make some differences.

Do we charge the larger users more? When they reach a certain number of gallons?

District Finance Director Sherman: We.., we do. We do.

And, we [stammer].., and, for the residents, we cap their wastewater charges at ten thousand.

Chairperson Spiritis: And.., and I know that you said that everything is finalized right now but I think this is a work in progress, the financing.

WIFIA is still available. I've been working, and I know that other Members of the Board have been working, with our representatives in Washington. And, we're hoping that maybe we can work something out with the WIFIA program where the rates will go down substantially.

District Finance Director Sherman: Well, and again, keep in mind, we do have that variable rate component that we can take out at any time.

So, whether we get money from a grant, or we get money from, you know, like, again, the plan was SRF, but if we get a better offer then that variable rate, we can take out.

Chairperson Spiritis: And, of course, when we get more users, the rates will go down as well.

District Finance Director Sherman: Absolutely.

Chairperson Spiritis: So.., so, that's very important as well.

So, the development, hopefully in the next few years will help soften the blow on the water fees.

Any other questions? Mayor, you have any questions? Is the Mayor here? He's not here. Okay.

Commissioner Lanier.

Board Member Lanier: I'm gonna submit my questions in.., in writing.

I don't.., I don't.., I'm not prepared for it now. There's a lot of questions that I wanna ask about this budget but the timing threw me off. So, I will submit those in writing.

Chairperson Spiritis: Okay.

Commissioner Miller-Anderson, any questions for Staff?

[Pause]

Board Member Lanier: And, I do have questions about the issue about the generator.

And those questions regard whatever happened with that? Did we get a new one? Because, I know that the issue was that, when we bought that generator, it was.., it was twenty-two years old.

And, now we are at., spending that kind of money for a twenty-two year old.., twenty-one year old.., twenty year old generator, and we still don't have a new one. So, that is another question that's gonna go in my list of questions to ask.

Chairperson Spiritis: So, that's one of your questions right now.

So, Director, can you respond to the age of the generator that was purchased and the condition of that generator?

Executive Director Niemann: Mr. Chair, if I may?

Chairperson Spiritis: Yes.

Executive Director Niemann: So, the.., the generator that we purchased, and forgive me, I don't know the exact year but I believe it's a 2024 generator.

That generator has been in place for the past three months and it did take the place of the rental generator that had been in place for about ten years.

Chairperson Spiritis: And it was rebuilt, correct?

Executive Director Niemann: Yes.

Rebuilt, under warranty and it has annual maintenance being done on it.

Chairperson Spiritis: Okay.

Have you used that generator…

Executive Director Niemann: Yes.

Chairperson Spiritis: …at all?

Executive Director Niemann: So, we are required by DEP to run that generator underload, four hours a month. And so, every month we do that.

In addition, we get reduced rates from FPL under their load control program. And so, they tested the functionality of the generator remotely and that's.., we successfully passed that about two months ago.

Chairperson Spiritis: Okay.

That answer your questions?

Board Member Lanier: No.

It does not. I'll put them in writing 'cause that's.., that's bunch of hogwash because, based on the reports that I've gotten in regards to the generator… I don't wanna get into it tonight because we got other stuff to do but I will submit that in writing.

Because, that is not true.

Chairperson Spiritis: Okay.

We'll be waiting for it to come in writing.

Commissioner Miller-Anderson, any questions regarding the budget?

Board Member Lanier: Yeah.

It's not gonna come to you, it's gonna come to the…

Chairperson Spiritis: Yes.

Councilperson Lanier;…City Manager.

Chairperson Spiritis: Right.

Board Member Lanier: Yes.

Chairperson Spiritis: And, hopefully, he'll share it with the rest of the Board.

Commissioner Miller-Anderson, any questions you have concerning the budget for the UD District?

Board Member Miller-Anderson: [Inaudible].

Board Member Guyton: No.

We started at…

Chairperson Spiritis: No.

Board Member Guyton: …5:30.

Chairperson Spiritis: We started at 5:30.

Board Member Miller-Anderson: Okay.

When did that [inaudible]?

Chairperson Spiritis: At the last meeting we.., we decided to do that.

And it was advertised properly.

Board Member Miller-Anderson: [Inaudible].

Chairperson Spiritis: We.., we.., we decided to do that at the last meeting.

And, it was advertised.

Board Member Miller-Anderson: I didn't...

I didn't get off…

Chairperson Spiritis: We discussed.

Board Member Miller-Anderson: And, I didn't get off when you all thought I was off, I was still on.

So, was that at the beginning or the ending of the meeting?

Chairperson Spiritis: Okay.

Board Member Guyton: It was the end.

I was Chairing the meeting.

Chairperson Spiritis: Right.

Board Member Miller-Anderson: Yeah.

Board Member Guyton: Yes.

Board Member Miller-Anderson: Okay.

I.., I'll go back and check that. I.., I…

Board Member Guyton: Yes.

Board Member Miller-Anderson: …didn't hear that.

And, I was on the whole time.

Chairperson Spiritis: Okay.

We have Director Sherman here. You're gonna put on a presentation for us? On the budget?

District Finance Director Sherman: Um…

Chairperson Spiritis: On the UD budget?

District Finance Director Sherman: No.

Board Member Guyton: No.

Chairperson Spiritis: Or just…

Board Member Guyton: Just...

Chairperson Spiritis: Just.., just the Director.

District Finance Director Sherman: Just.., just Mr. Niemann.

Board Member Guyton: Yeah.

If there are no more…

Chairperson Spiritis: No other questions?

Board Member Guyton: …questions?

Chairperson Spiritis: Then we'll…

Board Member Guyton: End this meeting and start the UD Meeting.

Chairperson Spiritis: Okay.

Do we need a motion to adjourn?

Board Member Lanier: This is the budget workshop is adjourned?

Chairperson Spiritis: Yes.

Budget workshop.

Chairperson Spiritis: Do we need a motion to adjourn, Clerk, or can we just adjourn the meeting?

VI. <u>ITEM NO. VI</u>

COMMENTS AND DISCUSSION

Item skipped

CITY MANAGER
CITY ATTORNEY
MAYOR AND CITY COUNCIL

VII. <u>ITEM NO. VII</u>

<u>ADJOURNMENT</u>

Board Member Guyton: Yeah.

Chairperson Spiritis: So, this meeting's over.

Thank you.

[Gavel]

[End of video/audio]

City Employees, Public Speakers and Others

Assistant City Attorney Jason Tracey.....Assistant City Attorney Tracey

_____

Is Josh saying backflow or backhoe or vachoe?

Riviera Beach - Utility Special District

To:	Honorable Mayor, Chairperson, and Utility Special District Board
From:	Debrah Hall, District Clerk
Through:	William Wilkins, City Manager
Subject:	**August 26, 2026, Utility Special District Board of Directors Meeting Minutes**
Date:	November 23, 2026
CC:	General Public

Background:
Attached you will find the August 26, 2026, Utility Special District Board of Directors Meeting Minutes.

City Goals:
The Citywide Goal is to Enhance Government Stewardship.

Fiscal/Budget Impact:
There is no fiscal impact

Recommendation:
Staff recommends a Motion to approve the August 26, 2026, Utility Special District Board of Directors Meeting Minutes.

Attachments:
1. August 26, 2026 Utility Special District Meeting Minutes.pdf

UTILITY SPECIAL DISTRICT MEETING
August 26, 2026
5:30 p.m.

Chairperson

Glen Spiritis.....Chairperson Spiritis
District 4

Vice Chair

Fercella Davis Panier.....Vice Chair Davis Panier
District 5

Board Members

Bruce Guyton .....Board Member Guyton
District 1

KaShamba Miller-Anderson.....Board Member Miller-Anderson
District 2

Shirley D. Lanier.....Board Member Lanier
District 3

Ex Officio Board Member

Douglas A. Lawson.....Mayor Lawson

Administration

William E. Wilkins – City Manager

Debrah Hall –District Clerk

Dawn Wynn – District Attorney

Randy Sherman - District Finance Director

Transcribed by:

Legal Transcription On Call
(561) 917-1636

[Audio delayed]

CALL TO ORDER

Chairperson Spiritis: …'10 p.m.

ROLL CALL

Chairperson Spiritis: Roll call, Clerk.

District Clerk Hall: Chairperson Dr. Glen Spiritis?

Chairperson Spiritis: Here.

District Clerk Hall: Vice Chair Fercella Davis Panier?

Vice Chair Davis Panier: Here.

District Clerk Hall: Board Member Bruce Guyton?

Board Member Guyton: Here.

District Clerk Hall: Board Member KaShamba Miller-Anderson?

Board Member Miller-Anderson: Present.

District Clerk Hall: Board Member Shirley Lanier?

Board Member Lanier: Here.

District Clerk Hall: *Ex officio* Board Member Mayor Douglas Lawson?

Mayor Lawson: [Absent].

District Clerk Hall: Sitting for City Manager William E. Wilkins is Assistant City Manager Kevin Copin?

Assistant City Manager Copin: Here.

District Clerk Hall: District Clerk Debrah Hall is present.

District Attorney Dawn Wynn?

District Attorney Wynn: Here.

[Inaudible comment]

District Clerk Hall: District Finance Director Randy Sherman?

District Finance Director Sherman: [Out].

District Clerk Hall: Did you wanna announce.., announce your name?

Assistant City Attorney Tracey: Jason Tracey, Assistant City Attorney.

District Clerk Hall: Mr. Chair, you may proceed.

Chairperson Spiritis: Okay.

INVOCATION

Chairperson Spiritis: We'll have the Invocation…

PLEDGE OF ALLEGIANCE

Chairperson Spiritis: …and the Pledge, led by Board Member Bruce Guyton.

Board Member Miller-Anderson: Mr. Sherman is here.

I don't think he heard you. I don't know if you saw him.

District Clerk Hall: Randy Sherman?

District Finance Director Sherman: Here.

District Clerk Hall: Let the record reflect that Randy Sherman is present.

Thank you.

[Moment of silence]

Board Member Guyton: I pledge allegiance…

All: …to the Flag of the United States of America, and to the Republic for which it stands, one nation under God, indivisible with liberty and justice for all.

AGENDA APPROVAL

ADDITIONS, DELETIONS, SUBSTITUTIONS

Chairperson Spiritis: Are there any additions, deletions, substitutions from the Board?

[Pause]

Chairperson Spiritis: How about the Manager and the Mayor? Mayor's not here.

City Manager, any deletions, substitutions? None?

Assistant City Manager Copin: No, sir.

Chairperson Spiritis: Okay.

DISCLOSURES

Chairperson Spiritis: Are there any disclosures from any of the Board Members?

[Pause]

Chairperson Spiritis: Or, any of the Staff?

Board Member Guyton: Mr. Chair?

Chairperson Spiritis: Yes.

Board Member Guyton.

Board Member Guyton: Yes.

I.., I have had a brief conversation with [pause]… What's the water company?

Chairperson Spiritis: U.S. Water?

Board Member Guyton: U.S. Water.

Chairperson Spiritis: U.S. Water.

Board Member Guyton: Yes.

Chairperson Spiritis: Yes.

I'd.., I'd like to add that I had a conversation with them approximately a month ago as well.

ADOPTION OF AGENDA

Chairperson Spiritis: Okay.

Is there a motion to adopt the budget…

Board Member Guyton: So moved.

Chairperson Spiritis: …Agenda?

The motion's moved by Board Member Guyton.

Is there a second?

Vice Chair Davis Panier: Second.

Chairperson Spiritis: Seconded by Board.., Vice Chair Davis Panier.

Clerk.

District Clerk Hall: Board Member Davis Panier?

Vice Chair Davis Panier: Yes.

District Clerk Hall: Board Member Guyton?

Board Member Guyton: Yes.

District Clerk Hall: Board Member Lanier?

Board Member Lanier: No.

District Clerk Hall: Board Member Miller-Anderson?

Board Member Miller-Anderson: Yes.

District Clerk Hall: I'm sorry.

I didn't hear you, Ms. Miller-Anderson.

Board Member Miller-Anderson: Yes.

District Clerk Hall: Chairperson Dr. Spiritis?

Chairperson Spiritis: Yes.

District Clerk Hall: Passes with Board Member Lanier dissenting.

Chairperson Spiritis: Okay.

CONSENT AGENDA

Chairperson Spiritis: We'll go onto the Consent Agenda.

1. ITEM NO. 1

MINUTES

2. ITEM NO. 2

RESOLUTIONS

2b. ITEM NO. 2B

RESOLUTION NUMBER 34-26UD: A RESOLUTION OF THE BOARD OF DIRECTORS OF THE CITY OF RIVIERA BEACH UTILITY SPECIAL DISTRICT, PALM BEACH COUNTY, FLORIDA, APPROVING THE USE OF THE ORLANDO UTILITIES COMMISSION CONTRACT NO. 4601- QC FOR WATER STORAGE TANK INSPECTION AND SEDIMENT REMOVAL SERVICES FROM AQUEOUS INFRASTRUCTURE MANAGEMENT IN AN AMOUNT NOT TO EXCEED $41,970.00 F R O M ACCOUNT NUMBER 41131103-543000, UTILITY SERVICE ACCOUNT; AND AUTHORIZING THE UTILITY SPECIAL DISTRICT FINANCE DIRECTOR TO MAKE PAYMENTS F R O M ACCOUNT NUMBER 41131103-543000 IN AN AMOUNT NOT TO EXCEED $41,970.00; AND PROVIDING AN EFFECTIVE DATE.

JOSHUA NIEMANN, UTILITY SPECIAL DISTRICT EXECUTIVE DIRECTOR, (561) 845-4185

2c. ITEM NO. 2C

RESOLUTION NUMBER 36-26UD: A RESOLUTION OF THE BOARD OF DIRECTORS OF THE CITY OF RIVIERA BEACH UTILITY SPECIAL DISTRICT, PALM BEACH COUNTY, FLORIDA, APPROVING THE USE OF THE PIGGYBACK CONTRACT FROM THE CITY OF PORT ORANGE SERVICE CA NO. 7245 FOR VACUUM TRUCK SERVICES FROM MEEKS PLUMBING, INC. IN AN AMOUNT NOT TO EXCEED $39,625.00 FROM ACCOUNT NUMBER 41131103- 543000, UTILITY SERVICE ACCOUNT; AND AUTHORIZING THE UTILITY SPECIAL DISTRICT FINANCE DIRECTOR TO MAKE PAYMENTS FROM ACCOUNT NUMBER 41131103-543000 IN AN AMOUNT NOT TO EXCEED $39,625.00; AND PROVIDING AN EFFECTIVE DATE.

JOSHUA NIEMANN, UTILITY SPECIAL DISTRICT EXECUTIVE DIRECTOR, (561) 845-4185

Chairperson Spiritis: Is there a motion to approve the…

Well, does anybody wanna move anything from the Consent Agenda?

Board Member Miller-Anderson: Yes.

Chair?

Chairperson Spiritis: Yes.

Board Member Miller-Anderson: 2a as in apple, 2d as in dog, and 2e.

Chairperson Spiritis: 2a and 2b.

2a, 2d…

Board Member Miller-Anderson: A, D, and E.

City Clerk Hall: ...and E.

Chairperson Spiritis: And E.

Board Member Guyton: E like in echo?

Chairperson Spiritis: Yes.

Board Member Miller-Anderson: Yes.

Chairperson Spiritis: 41-26UD.

I guess we can add those right after the [pause]…

District Clerk Hall: Mr. Chair, they will be discussed right after the approval of the Consent Agenda.

Chairperson Spiritis: Yes.

District Clerk Hall: Then, we will move onto the Items that were pulled.

Chairperson Spiritis: Okay.

Is there a motion to approve the Consent Agenda?

Vice Chair Davis Panier: So moved.

Chairperson Spiritis: It's moved by…

Board Member Guyton: Second.

Chairperson Spiritis: …Vice Chair.

And, seconded by Commissioner Guyton.

Board Member Guyton: Yes.

As amended.

Chairperson Spiritis: As amended.

Board Member Guyton: Yes.

Chairperson Spiritis: Roll call.

District Clerk Hall: Vice Chair Davis Panier?

Vice Chair Davis Panier: Yes.

District Clerk Hall: Board Member Lanier?

Board Member Lanier: No.

District Clerk Hall: Board Member Guyton?

Board Member Guyton: Yes.

District Clerk Hall: Board Member Miller-Anderson?

Board Member Miller-Anderson: No.

District Clerk Hall: I'm sorry.

I didn't hear you.

Board Member Miller-Anderson: No.

District Clerk Hall: And, Chairperson Dr. Spiritis?

Chairperson Spiritis: Yes.

District Clerk Hall: That Item passes with Board Members Miller-Anderson and Lanier dissenting.

Chairperson Spiritis: Okay.

END OF CONSENT AGENDA

Chairperson Spiritis: So, we have right now, a request to move 2a, 2b, and 2e.

And, I suggest we move it at the end of the Agenda.., at the end of [inaudible].

District Clerk Hall: Dr. Spiritis?

After con'.., we vote on the Consent, we go into the direct discussion with the Items that were pulled from Consent. So, we would do those first.

Chairperson Spiritis: What?

District Clerk Hall: So, right now, we would discuss Item 2a.

Chairperson Spiritis: Oh, we're gonna go right to that. Okay.

So…

District Clerk Hall: Yes.

Chairperson Spiritis: …we'll go right to them first.

Okay.

District Clerk Hall: Yeah.

2a. ITEM NO. 2A

District Clerk Hall: So, we're on.., we're on Resolution Number 33-26UD.

A Resolution of the Board of Directors of the City of Riviera Beach Utility Special District…

Chairperson Spiritis: Hold on.

Are.., are there any comments on the…

District Clerk Hall: No, sir.

We do not have any comment cards on…

Chairperson Spiritis: Okay.

District Clerk Hall: …this Item.

The acceptance of the cards is closed.

Chairperson Spiritis: Okay.

Thank you.

District Clerk Hall: You're welcome.

District Clerk Hall: **RESOLUTION NUMBER 33-26UD: A RESOLUTION OF THE BOARD OF DIRECTORS OF THE CITY OF RIVIERA BEACH UTILITY SPECIAL DISTRICT, PALM BEACH COUNTY, FLORIDA, APPROVING THE PURCHASE OF TURBIDIMETERS AND CONTROLLERS FROM HACH IN AN AMOUNT NOT TO EXCEED $69,329.43 FROM ACCOUNT NUMBER 41131103-543000, UTILITY SERVICES ACCOUNT; AND AUTHORIZING THE UTILITY SPECIAL DISTRICT FINANCE DIRECTOR TO MAKE PAYMENTS FROM ACCOUNT NUMBER 41131103-543000 IN AN AMOUNT NOT TO EXCEED $69,329.43; AND PROVIDING AN EFFECTIVE DATE.**

JOSHUA NIEMANN, UTILITY SPECIAL DISTRICT EXECUTIVE DIRECTOR, (561) 845-4185

Board Member Guyton: So moved.

Chairperson Spiritis: Is there a second?

Vice Chair Davis Panier: Second.

Chairperson Spiritis: Okay.

Moved by Board Member Guyton. Seconded by Board.., Vice Chair Davis Panier.

Clerk.

Executive Director Niemann: Mr. Chair, if I may?

Chairperson Spiritis: [Inaudible] presentation.

Executive Director Niemann: Yes, sir.

So.., so, the $69,329.43. This is for the purchase of Turbidimeters from the…

Board Member Miller-Anderson: Mr. Chair?

Executive Director Niemann: …Hach Company.

Board Member Miller-Anderson: Chair?

Is there a presenta'… You don't have a PowerPoint or anything?

Executive Director Niemann: I do not.

Board Member Miller-Anderson: Go ahead.

Executive Director Niemann: So, these are purchase of the Turbidity Meters for our filters.

We currently just finished rehabbing fourteen of the filters with the.., within the existing water treatment plant. As part of that rehabilitation, we are changing out all of the Turbidity Meters. The Turbidity Meters are basically a way to measure the turbiditiness of water, or how cloudy it is.

And so, we can effectively measure how much sludge is passing through the filters into our clear wells on a minute by minute basis.

Currently, it's a requirement and they're sampling every two hours to meet our requirement to DOH. But, this will allow them to go back to what they had when the filters were originally installed.

District Clerk Hall: Mr. Chair?

Mr. Chair, please let the record reflect that *Ex officio* Mayor Douglas Lawson is present.

Chairperson Spiritis: Yes.

Thank you.

Are there any comment cards on this.., on this?

District Clerk Hall: Mr. Chair, there are no comment cards on this Item.

Chairperson Spiritis: Okay.

Any discussion?

Board Member Guyton: It was pulled by Commissioner Miller-Anderson.

I would assume she may have some.

Chairperson Spiritis: Commissioner Miller-Anderson, do you have any questions on this?

[Pause]

Chairperson Spiritis: No?

No other…

Board Member Guyton: No questions?

Okay.

Chairperson Spiritis: Okay.

Let's go. 2d.

Board Member Guyton: You.., you can call the question.

Chairperson Spiritis: Okay.

Call.., call the vote, please.

District Clerk Hall: Vice Chair Davis Panier?

Vice Chair Davis Panier: Yes.

District Clerk Hall: Vice Chair Guyton?

Board Member Guyton: Yes.

District Clerk Hall: I'm sorry.

Board Member Guyton?

Board Member Guyton: Yes.

District Clerk Hall: Board Member Lanier?

Board Member Lanier: Yes.

District Clerk Hall: Board Member Miller-Anderson?

Board Member Miller-Anderson: No.

District Clerk Hall: Chairperson Dr. Spiritis?

Chairperson Spiritis: Yes.

District Clerk Hall: The Item passes with Board Member Miller-Anderson dissenting.

Chairperson Spiritis: Okay.

2b.

2d. <u>ITEM NO. 2D</u>

District Clerk Hall: Mt. Chair, we are on Item 2d.

District Clerk Hall: RESOLUTION NUMBER 40-26UD: A RESOLUTION OF THE BOARD OF DIRECTORS OF THE CITY OF RIVIERA BEACH UTILITY SPECIAL DISTRICT, PALM BEACH COUNTY, FLORIDA, APPROVING THE USE OF THE ASTERRA PLATFORM FOR LEAK DETECTION IN AN AMOUNT NOT TO EXCEED $59,000.00 FROM THE WATER DISTRIBUTION CAPITAL INFRASTRUCTURE ACCOUNT NUMBER 41231102-563000; AND AUTHORIZING THE UTILITY SPECIAL DISTRICT FINANCE DIRECTOR TO MAKE PAYMENTS FROM THE WATER DISTRIBUTION CAPITAL INFRASTRUCTURE ACCOUNT NUMBER 41231102-563000 IN AN AMOUNT NOT TO EXCEED $59,000.00; AND PROVIDING AN EFFECTIVE DATE.

JOSHUA NIEMANN, UTILITY SPECIAL DISTRICT EXECUTIVE DIRECTOR, (561) 845-4053

District Clerk Hall: Mr. Chair, we do not have comment cards on this Item.

The acceptance of the [stammer] comment cards is closed.

Board Member Guyton: So moved.

Chairperson Spiritis: [Inaudible] by Board Member Guyton.

Vice Chair Davis Panier: Second.

Chairperson Spiritis: Seconded by Vice Chair Davis Panier.

Any comment card'… There's no comment cards on this, right?

Okay. Call the vote.

[Inaudible comments]

Chairperson Spiritis: Oh.

Do you have…

District Clerk Hall: Ask her. She had it pulled.

Board Member Miller-Anderson: He did a…

Chairperson Spiritis: Do.., do you have a question…

Board Member Miller-Anderson: …presentation?

Chairperson Spiritis: …for discussion?

Yes. Miller-Anderson, Board…

Board Member Miller-Anderson: Can he do…

Chairperson Spiritis: …Member Miller…

Board Member Miller-Anderson: He didn't do a pre'.., can he do presentation?

Chairperson Spiritis: Are you gonna do a presentation on this?

Board Member Miller-Anderson: Yes.

Assistant City Manager Copin: I can tell you about it. Yeah.

So, the Item before you is from a company called Asterra. They use satellite-based technology, they use L-Band radar to penetrate the grounds to deter'.., to find leaks.

The way they find the leaks is, they look at the actual water compositions. So, there's a difference between regular water to the ground and our finished treated water, and they actually

look for that in the ground, and then they provide us a map that'll show potential leaks within the City.

These.., currently, there's about twenty jurisdictions in the State of Florida that use this technology and they've been using it very successfully. This gives us a.., a.., a much faster way to find leaks in the ground, because we believe a lot of our water loss is through just leaks in the ground.

A lot of our water mains are behind houses. A lotta people don't realize that the water's leaking. A lotta times, the bottom of the water mains break, the water sprays straight down, nobody sees it for years until either it becomes a sinkhole or something like that.

So, we believe this technology that will do the.., a single scan the first time when they come out. And, once they pinpoint areas that they have an idea where the leaks are, they have an acoustic team that comes out and, similar to the technology they used to find leaks in your pool, they do the same thing.

And, they listen for the leaks in the ground and pinpoint where the leaks are so our crews can actually fix them and reduce our water losses, which reduces the amount of water we have to treat and can save the Utility a lot of money.

Chairperson Spiritis: Any discussion?

Any questions?

Board Member Miller-Anderson: Is there a…

Chairperson Spiritis: [Stammer]…

Board Member Miller-Anderson: …certain area that you're going to start in or are you.., do you have a plan for how this is gonna roll out?

Are you working in certain areas first?

Assistant City Manager Copin: So, the.., the scan does the entire City.

Board Member Miller-Anderson: Okay.

Assistant City Manager Copin: So, it does our… Actually, it's more than the City, it does the entire service area of the Utility.

And then, what they do is, they give us some.., they.., they review the map, they look at the.., the different.., like I said, look at the difference between the wa'.., groundwater and the treated water and they, basically, figure out, okay, this is treated water and they found those pockets.

And then, depending on where the worst leaks are, you know, we won't know exactly where they're gonna start until they figure out where the worst leaks are in the City.

Board Member Miller-Anderson: And then, were we only ab'…

Why are we having to do a piggyback for this?

Assistant City Manager Copin: This is actually a sole source because they have patented technology that only they hold the patent to.

It's their…

Board Member Miller-Anderson: Okay.

Assistant City Manager Copin: …sa'.., it's their satellites, it's their equipment, it's their technology, it's…

And, we have looked at other technologies and there's nobody.., most.., every other company we looked at is a lot more expensive and does not provide the services that they do.

Board Member Miller-Anderson: So, they are sole source or they're just cheaper?

Assistant City Manager Copin: They are a sole source that is less expensive than other companies that have similar technologies, but not the same technology.

Board Member Miller-Anderson: Okay.

Chairperson Spiritis: Any other questions?

Mayor Lawson: Mr. Chair?

Chairperson Spiritis: Yes.

Mayor.

Mayor Lawson: Thank you.

And, that was my question, how was this software.., how was this actually procured?

And, I think, just make sure, Director and Assistant Director, that any item could possibly get pulled, so it's always being ready for a presentation and understanding that anything that comes to the Board, they may have some unreadiness.

'Cause, the procurement question was one that came up for me but you answered that with sole source.

So, thank you.

Chairperson Spiritis: Okay.

Any other questions?

[Pause]

Chairperson Spiritis: Clerk.

District Clerk Hall: Vice Chair Davis Panier?

Vice Chair Davis Panier: Yes.

District Clerk Hall: Board Member Guyton?

Board Member Guyton: Yes.

District Clerk Hall: Board Member Lanier?

Board Member Lanier: Yes.

District Clerk Hall: Board Member Miller-Anderson?

Board Member Miller-Anderson: Yes.

District Clerk Hall: Chairperson Dr. Spiritis?

Chairperson Spiritis: Yes.

District Clerk Hall: That is a unanimous vote.

2e. <u>ITEM NO. 2E</u>

District Clerk Hall: Mr. Chair, we are on Item 2e.

Resolution Number 41-2…

Chairperson Spiritis: Clerk, could you just hold up one second?

Did we approve the Consent Agenda? For the Items that were left on the Consent Agenda?

Vice Chair Davis Panier: Mhmm.

Chairperson Spiritis: Yeah.

District Clerk Hall: That's what we're doing now.

Chairperson Spiritis: Okay.

But we.., we… Didn't we have other Items?

District Clerk Hall: Right.

This will be the last one that…

Chairperson Spiritis: This'll be…

District Clerk Hall: …was pulled…

Chairperson Spiritis: …the last one?

District Clerk Hall: …from Consent.

Yes, sir.

Chairperson Spiritis: Okay.

District Clerk Hall: **RESOLUTION NUMBER 41-26UD: A RESOLUTION OF THE BOARD OF DIRECTORS OF THE CITY OF RIVIERA BEACH UTILITY SPECIAL DISTRICT, PALM BEACH COUNTY, FLORIDA, APPROVING THE USE OF THE PIGGYBACK CONTRACT FROM THE PASCO COUNTY SCHOOLS RFP # 18-014-LW FOR FUEL TANK REMOVAL FROM TANK WIZARDS INC. IN AN AMOUNT NOT TO EXCEED $50,902.60 FROM ACCOUNT NUMBER 41131103-559990, CONTINGENCY ACCOUNT AND $20,019.22 FROM ACCOUNT NUMBER 41131104-534000 CONTRACT SERVICES; AND AUTHORIZING THE UTILITY SPECIAL DISTRICT FINANCE DIRECTOR TO MAKE PAYMENTS FROM ACCOUNT NUMBER 41131103- 559990 IN AN AMOUNT NOT TO EXCEED $50,902.60 AND ACCOUNT NUMBER 41131104-534000 IN AN AMOUNT NOT TO EXCEED $20,019.22; AND PROVIDING AN EFFECTIVE DATE.**

JOSHUA NIEMANN, UTILITY SPECIAL DISTRICT EXECUTIVE DIRECTOR, (561) 845-4185

District Clerk Hall: Mr. Chair, there are no comment cards on this Item.

The acceptance of cards is closed.

Board Member Guyton: So moved.

Chairperson Spiritis: It's moved by Board Member Guyton.

Vice Chair Davis Panier: Second.

Chairperson Spiritis: Seconded by Vice Chair Davis Panier.

Executive Director Niemann: Mr. Chair, if I may?

So, the Utility District currently has two diesel ground storage tanks that have been out of service since I started. And, the one located at the existing water treatment plant has been out of service for over fifteen years. We also have one at a lift station.

FDEP requires that we have leak detection systems that are certified yearly. And so, when we notify'.., when we were notified of these diesel storage tanks, instead of installing leak detection systems on tanks that are no longer being used, it makes more sense to remove them from the ground and take them out of service indefinitely.

And so, the request in front of you is to take those two tanks out of the ground and then be prepared for A, the decommissioning of the existing plant, and then, at the lift station, the new tank has a belly tank so it's above ground and it has a dual containment so it doesn't ha'.., need the same exact technology as the current one does.

Chairperson Spiritis: Any questions?

Board Member Miller-Anderson: And, the same thing with this one here.

Chairperson Spiritis: Commissioner Miller-Anderson.

Board Member Miller-Anderson: The piggyback.

What was the reason for that?

Executive Director Niemann: So, the reason we chose piggyback for this, the fuel tanks are required to be done on a.., on a yearly basis.

And so, because of the timeline and the short duration of these needing to be done, we elected to piggyback. Generally, we find in Utilities that the piggybacks that we use are anywhere from a year to year and a half old.

And because of that, we're getting prices that haven't been reflective of the in'.., inflation. And so, they're generally, and more often than not, cheaper.

Board Member Miller-Anderson: But, are they [stammer]…

Are we getting what we're asking for or are we having to go with what the previous company had?

Executive Director Niemann: So, we're actually getting the exact same dollar amount that the Pasco County School got when they were.., they had to do the same exact kind of work.

Board Member Miller-Anderson: So, it was the exact same thing…

Executive Director Niemann: Yes, ma'am.

Board Member Miller-Anderson: …that they did?

Executive Director Niemann: Removing fuel tanks.

Yes, ma'am.

Board Member Miller-Anderson: Okay. Alright.

Thank you.

I just… Well, one thing. I just noticed that we have a lot of piggybacks in a lot of these Agenda Items tonight. So, that is definitely one of my questions that I'm gonna ask every time.

But also, I hope that there are presentations and we're not just kinda talking and just saying things up here, 'cause we need to be able to show why we're spending this type of money.

Executive Director Niemann: Yes, ma'am.

Board Member Miller-Anderson: Thank you.

Chairperson Spiritis: Director, can you tell us what would happen if we did not remove this tank?

Executive Director Niemann: So, if we did not remove these tanks, we would be required to put leak detection systems on tanks that aren't being in.., aren't being used.

Chairperson Spiritis: Would we get fines?

Executive Director Niemann: We would…

We… Well, we wouldn't get fined once the leak detection systems on. We would be fined if the leak detection systems weren't installed.

Chairperson Spiritis: Okay.

Executive Director Niemann: Or, if they failed.

Chairperson Spiritis: Okay.

No comments?

Board Member Lanier: Yeah.

I do…

Chairperson Spiritis: No public…

Board Member Lanier: …have a.., I have a…

Chairperson Spiritis: Yes.

Board Member Lanier: …question.

Chairperson Spiritis: Go ahead.

Commissioner Lanier.

Board Member Lanier: So, I see that this is spread across two accounts.

Why is this being split?

Executive Director Niemann: So, the.., the two accounts is because one is from the water plant account and the other one is from the wastewater account.

Because, one is located at a lift station, we pulled the $20,000 from the lift station account, or the.., the wastewater collection account. And then, the other one from the water treatment plant account because it's located at the water treatment plant.

Board Member Lanier: So, this is not an attempt to.., to not exceed a single [inaudible] purchase order?

Executive Director Niemann: No, ma'am.

Board Member Lanier: Alright.

So.., but, more importantly, what is in the fuel tanks?

Executive Director Niemann: Right now, nothing.

I mean, I know at one point, there was fuel but I'm.., we're hoping that when they were taken permanently out of service, they drained them first. That's why we need them to come in to be able to identify what's in there and remove them.

Board Member Lanier: So, has there [stammer].., has there ever been any site assessments, environmental assessments of that area?

Executive Director Niemann: So…

[Inaudible comment]

Executive Director Niemann: We just did complete a site assessment for the water treatment plant. I'd be more than happy to share that with you.

And then, as far as Lift Station 47, I do not believe a site assessment has been completed there.

Board Member Lanier: But, you're removing fuel tanks from there?

Executive Director Niemann: Yes, ma'am.

Board Member Lanier: Yeah.

So, there needs to be some type of environmental site assessment given that you're removing [stammer] fuel tanks from there.

And, you…

Executive Director Niemann: Yes, ma'am.

Board Member Lanier: …don't even know what's in them.

You said you think it may be fuel, or there may not be nothing in them but there needs to be some type of environmental site assessment where you're moving or putting these tanks.

Executive Director Niemann: Yes, ma'am.

Board Member Lanier: Removing, not putting these tanks.

Executive Director Niemann: Yeah.

We're taking them…

Board Member Lanier: Um…

Executive Director Niemann: …out of service.

Board Member Lanier: Yeah.

Because, we have a.., a lot of issues with.., with groundwater soil contamination. So, that needs to be taken care of.

Executive Director Niemann: Yes, ma'am.

Chairperson Spiritis: Alright.

Board Member Lanier: [Inaudible].

Chairperson Spiritis: Director, you do a phase one environmental and a phase two environmental, I assume, if it's necessary for you to move this tank, correct?

Executive Director Niemann: Yes.

And, this is done under the.., the direction of a licensed engineer. So, wh'.., while they're taking it out, they'll make sure that it's done in a manner that anything that's in the tank is first recovered and then taken safely out so it does not spill into the surrounding soils.

Chairperson Spiritis: Right.

And, they check the surrounding soils before they…

Executive Director Niemann: Yes.

Chairperson Spiritis: …do this, correct?

Executive Director Niemann: The first thing…

The first step they're gonna do is they're gonna come in, check exactly what's in those tanks. Is it… At one point, it was diesel fuel. But, it could be now just water. And.., and so, they'll check that.

They'll check how much the percentage of concentration it is in diesel, then they'll evacuate that out and then take the tanks out of the ground.

Board Member Lanier: I thought you said there wasn't nothing in them.

Executive Director Niemann: We…

He said he doesn't know.

Executive Director Niemann: There is.., they're no longer in service.

We do not know if there's anything in them because they're no longer in service, so we need to take them out of the ground. Now, there could be a leak allowing groundwater into the tanks.

Board Member Lanier: Well, where'd the diesel comes from?

Executive Director Niemann: Because that's what they.., they used to run generators.

So, at one time, they filled them to run the generators for those particular sites.

Board Member Lanier: So, yeah.

We definitely have to have some type of groundwater, soil assessment, environmental, once these things come out of the ground.

Executive Director Niemann: Yes, ma'am.

And.., and this requires permitting so, as we get through the permitting stage, those site assessments and [stammer].., and environmental studies will be completed.

Board Member Lanier: I'd like to have those.

Executive Director Niemann: Yes, ma'am.

Board Member Lanier: Or, for the whole Board, they need them.

That's it.

Chairperson Spiritis: Any other questions?

[Pause]

Chairperson Spiritis: [Inaudible].

Vice Chair Davis Panier: Chair?

Chairperson Spiritis: Yes.

Vice Chair Davis Panier: And, just for clarification as Commissioner Lanier was saying, so, we will get a pretest and a post test [inaudible] testing the ground soil before removal and then again after?

Executive Director Niemann: Yes, ma'am.

Vice Chair Davis Panier: Okay.

Chairperson Spiritis: Any questions?

[Pause]

Chairperson Spiritis: Clerk.

District Clerk Hall: Vice Chair Davis Panier?

Vice Chair Davis Panier: Yes.

District Clerk Hall: Board Member Guyton?

Board Member Guyton: Yes.

District Clerk Hall: Board Member Lanier?

Board Member Lanier: Yes.

District Clerk Hall: Board Member Miller-Anderson?

Board Member Miller-Anderson: No.

District Clerk Hall: Chairperson Dr. Spiritis?

Chairperson Spiritis: Yes.

District Clerk Hall: The Item passes with Board Member Miller-Anderson dissenting.

Board Member Lanier: Chair, I'd just like to say that I know that he says we're gonna do a pre and post test.

But, sometimes we have so much going on that we don't remember this stuff. How do we make sure that we get this and not just because somebody said so but…What do we need to do to make sure that we get.., we get this information?

'Cause, there's so much information involved with the water plant that you sometimes forget about, we were waiting on some type of soil contamination samples or assessments, and it kinda passes us by.

Chairperson Spiritis: Executive Director, you'll make sure that the Board receives the phase one and phase two environmental… Phase two if it's necessary? Environmental assessments?

Executive Director Niemann: Yes, sir.

I'll actually send you the one for the water plant when I get back to the office in the morning. That one's already been completed. And then, when we get the other one for the lift station completed, we'll start with the phase one.

And then, once phase two is done, we'll make sure those are emailed. I'll make sure to include them in my biweekly update when that report comes back.

Chairperson Spiritis: Okay.

Thank you.

So, is that okay with you?

Board Member Lanier: Yeah.

Chairperson Spiritis: Okay.

Thank you.

Before we go on, Clerk, we're on.., we're on…

3. ITEM NO. 3

UNFINISHED BUSINESS

PETITIONS AND COMMUNICATIONS FOR FILING

4. ITEM NO. 4

District Clerk Hall: Mr. Chair, we're on Item No. 4.

AWARDS AND PRESENTATIONS

District Clerk Hall: Awards and presentations.

Chairperson Spiritis: Mhmm.

4a. ITEM NO. 4A

District Clerk Hall: 4a.

District Clerk Hall: PRESENTATIONS OF UPDATES ON UTILITY SPECIAL DISTRICT PROJECTS

JOSHUA NIEMANN, UTILITY SPECIAL DISTRICT EXECUTIVE DIRECTOR, (561) 845-4185

Executive Director Niemann: Mr. Chair, if I may?

Chairperson Spiritis: Yes.

Executive Director Niemann: I'd like to call…

Chairperson Spiritis: Director…

Executive Director Niemann: …Nigel Grace to the podium from Brown and Caldwell to give an update from the owner's rep...

Chairperson Spiritis: Yes...

Executive Director Niemann: ...regarding our new water treatment plant.

Chairperson Spiritis: Thank you.

Mr. N. Grace: Good evening. I'm Nigel Grace with Brown and Caldwell, the City's owner's rep for the water treatment plant.

The.., the program remains on track with six out of seven GMPs on the various stages of active construction. Within the past month, believe July 31st to be precise, the JV submitted the 7th and final GMP that's required for commissioning the water plant.

That was submitted, we returned an initial round of comments. There's some further development and refining that's required to.., to.., to have something that's appropriately substantiated to be brought forward to the Board.

We expect to be able to work through that with.., with the USD and the JV over the next few weeks, [stammer], ultimately ending in something that will be brought forward.

For the GMPs 1… Well, GMPs 2, 3, and 4, those were the earlier GMPs authorized. Construction is well underway. In fact, for.., for the well fields, a.., a couple of the.., the surficial wells will be approaching a state where the City will be able to start taking beneficial use of those wells, within the next month or.., or so.

So, everything is.., is moving ahead as.., as expected. The overall schedule, of course, the critical part, is governed by the water treatment plant. That's.., that's the.., the central core. That's still on path for final completion in early 2030. [Stammer] that's been progressing. Of course, with.., with every project of this.., this kind of complexity, there.., there are issues, fits and starts that have to be overcome, you know, vendors and working through the details, procurement, permitting, et. cetera.

Over the past couple of weeks, the JV started and actually con'.., laying pipe in the ground for.., for some of the raw water piping of the plant. So, the early, kinda earth moving construction is beginning.

And, that GMP Number 6, which was the most recent one to be approved by the Board is, you know, in the early procurement per'.., permitting phases. The JV's looking into some alternative strategies for overcoming a permitting restriction on.., on the alignment of.., of the pipe.

But again, all of that is a work in progress, expected to be able to overcome those issues very soon.

So, the.., the only outstanding GMP, again, is Number 7. It's in hand. We expect to be able to bring that to closure fairly soon.

Beyond that, I.., I would say, you know, the USD, the JV, and the owner's rep team has been, you know, working fairly collaboratively as the issues arise which, undoubtedly, they will, really kinda jumping on things and taking a.., a collaborative approach in.., in troubleshooting the most appropriate resolution and.., and providing appropriate direction.

So, over this period, there's been no notices of change orders or schedule impacts, you know, for.., for any of the GMPs currently. So, everything is essentially moving along on track.

So, that.., that concludes the presentation for tonight. And, if you have any questions, I'll be more than happy to entertain them.

Chairperson Spiritis: Any questions from the Board?

Board Member Guyton: Yes.

Mr. Chair?

Chairperson Spiritis: Yes.

Board Member Guyton.

Board Member Guyton: Yes.

Ni'.., Nigel, what kind of numbers are coming in for the GEP 7?

Mr. N. Grace: Approximately $22 million.

$22 million.

Board Member Guyton: Twenty-two?

Mr. N. Grace: Correct.

Board Member Guyton: Okay.

Because, I believe there was some discussion at one time, and.., and I'm glad that they didn't come in at those numbers, around sixty or seventy, it was the approximate.

Mr. N. Grace: No.

It's.., it's well below that. And.., and this GMP, and just to define what's included in it, it includes a transmission.., the finished water transmission [inaudible] connected to the system. It includes some stormwater upgrades along avenue L, some flooding type issues. And, it includes an acid management system for the water plant.

So, it.., it.., it's the full featured GMP that will really kind of round out the project.

Board Member Guyton: Okay.

That's all I have, Mr. Chair.

Mayor Lawson: Mr. Chair?

Chairperson Spiritis: Yes.

Mayor.

Mayor Lawson: Thank you. Good to see you, Mr. Nigel.

Local participation on all GMPs, do we have a number or percentage on what local participation has been for all the GMPs to date?

Mr. N. Grace: Yes.

The.., the JV, and they can probably provide some specifics when they get here but they include that in their monthly report, I believe, to the Board. And, the numbers generally, if.., if memory serves me well, range from the twenties to forties plus percent for GMPs 1 through 4…

Mayor Lawson: 1 through…

Mr. N. Grace: …to date

Mayor Lawson …4?

Okay.

Mr. N. Grace: Right?

GMP 5 hasn't really gotten in.., in full steam yet. You know? So, that has yet to be determined. But, the.., the JV should be able to give you the precise numbers. But, it.., it's.., it's fairly robust, particularly for the wells, injection wells.., injection, the GMP 4, I think is well beyond fifty percent participation for that one.

Mayor Lawson: Perfect.

And, Mr. Chair, I'll reserve some time later for a discussion about Intergovernmental Affairs and grant writing, working directly with our JV team, our UD Director. And after they finish their comments, if I could have a few moments, please?

Chairperson Spiritis: Yes, Mayor.

As a matter of fact, that came up when you.., when you were out, the Intergovernmental Affairs person, and the need for one.

Mayor Lawson: Yes.

Chairperson Spiritis: So, we'll.., we can discuss that later on then.

Mayor Lawson: Perfect.

Thank you, Mr. Chair.

Chairperson Spiritis: Great. Thank you.

Any other questions from any of the Board Members?

[Pause]

Chairperson Spiritis: None?

Thank you.

Mr. N. Grace: Thank you.

Chairperson Spiritis: Director, do we have CDM/Haskell here?

Executive Director Niemann: Yes, sir.

Mr. Chair, if I may ask Michael Hoisington and Suzanne Mech'.., Mechler to come to the podium and provide a update regarding the construction of the new water plant and our new wells.

Chairperson Spiritis: Thank you.

Mr. O. Rodriguez: Good evening, Mr. Chair, Members of the Board, and City employees. My name is Omar Rodriguez from the Haskell/CDM Smith Joint Venture.

I'm gonna first start providing a status on GMP 2. GMP 2 are the surficial wells. So, we got the temporary pumps ready on the job site. We're gonna be proceeding to install those temporary pumps next week.

For 2015A, as soon as we get the electrical service from FP&L, we're gonna start working out with Mr. Josh and Mr. Gallant, the transition. We're gonna do the start-up and commissioning and do the back feed testing so the.., the well can be put into service.

For 2015B, we are working on the electrical installation on the [inaudible] and we are waiting for the generator and the automatic [inaudible] switch so we can proceed to do the startup and commissioning.

Jumping to GMP 3, we start with FAS-1. We finally got approval from FDOT to do the tie-in, water tie-in. So, we're gonna be coordinating that. We're also working on the installation of the instruments.

FAS-2 also was subject to [stammer] an FDOT permit. So, we got that permit so we can proceed to do the tie in and continue the civil works

FAS-3, we are doing well development. Around four weeks on [stammer] well development, and then we go to the step drawdown test.

FAS-4, in addition, subject to FDOT permit. We got that permit this week so we're gonna proceed to do the water tie in.

FAS-5, which is also next to 2015B, is well underway. All the electrical work has been completed and that well is basically completed. As soon as we get to a stage that GMP 6 is ready, we can put it into service.

And, the last one, FAS-6, we are right now doing casing.., reaming. We finished the pilot hole and we're doing reaming.

That will be for GMP 2 and 3.

GMP 4, for the deep [stammer] injection well, we are waiting for the.., we're gonna proceed with the casing installation. This is the final casing installation that goes down to 3,000 feet.

And then, for the dual-zone monitoring well, we continue reaming. Right now, this morning, we were at 1,800 feet.

So, that's a summary from 2 to 4.

Now, Mike, gonna talk about 5.

Mr. M. Hoisington: I just wanna hit on GMP 5.

Thank you for.., for giving us the opportunity to present today.

But, GMP 5, we received the Site Plan approval from the City of Riviera Beach. We've been installing, actively installing all the yard piping. We have roughly 18,000 feet. So, now we got the permit, we are proceeding with that.

Also, the other eight building permits are in for review with the City of Riviera Beach. Once we get those, we'll be able to mobilize the rest of the crews to be able to start that work.

Regarding local participation, we are meeting the twenty percent local participation to Palm Beach County. We will continue to meet that [stammer] participation for this project.

So, I can give you a breakdown. I do include it with the monthly report that's submitted but if you got any questions about it, we can have a one on one afterhours and.., and we can talk about that.

Mayor Lawson: Okay. [Stammer]…

Chairperson Spiritis: Mayor.

Mayor Lawson; Oh, I'm sorry. Thank you, Mr. Chair.

You said you include it in the report every month?

Mr. M. Hoisington: Yes, sir.

Mayor Lawson: And, just more so for the record, what number are we at now?

Mr. M. Hoisington: I do not have that value off the top of my head. I'm sorry.

Mayor Lawson: Okay.

And, I think with every team, I wanna make sure that they understand, we're spending over $400 million, so I wanna make sure we have that available, and know that the residents' money is circulating through the community with local businesses throughout Riviera Beach. So, I definitely wanna have that accessible and available.

Mr. Niemann, who reviews the report monthly?

Executive Director Niemann: Mr. Chair, if I may?

Chairperson Spiritis: Yes.

Executive Director Niemann: I.., I review the report.

And then, my Assistant, Ms. Haywood, adds it to our Agenda.

Mayor Lawson: Can you give me the local participation?

Executive Director Niemann: I believe it's around twenty-eight percent for…

Mayor Lawson: Okay.

Executive Director Niemann: …one of the GMPs.

But, we have over four GMPs, I think the GMP-4, which is the injection well and monitoring well, I believe it's around forty-six percent.

Mayor Lawson: Okay.

So, I guess to be very clear with Staff, and I wanna be very.., I think we're spoiled right now, our Fire Station did phenomenal numbers. We're spending the money and these are taxpayer's dollars, it's not my money, it's not any of this Board's money, it's not any of the Staff's money, it's the taxpayer's money.

I wanna make sure all that money is circulating through the local businesses when we're equipped to handle the jobs and capable of actually facilitating the development of it. So, if we can get that number up, higher to thirty, forty, fifty percent, is a better number.

‘Cause $400 million divided in half, going back into the community helps increase the economic wealth of my community. So, I wanna make sure that we focus on that number while, at the same time, finding ways to buy down the price as well.

So, I know it’s a difficult tall task but it’s.., it’s a heavy ask that the residents ask me for on a consistent basis so I have to demand that of my Staff.

Thank you, Mr. Niemann.

Thank you, Mr. Chair.

Chairperson Spiritis: Thank you, Mayor.

Can you give us an update on the resiliency applications?

Ms. S. Mechler: Yeah.

Our team… [woo sound]… right now is going through the requirements and seeing if we feel there's portions of the work that are viable. So, as soon as we’re able to complete that, we’ll pass it along.

Chairperson Spiritis: Just so everyone understands resiliency, it’s a federal program, a grant program that we’re trying to get funding for to assist in the development of the new water plant.

Ms. S. Mechler: This is specific to the state program, but yes.

Chairperson Spiritis: Yes.

The state... Well, these monies, I think, trickle down.

[Inaudible comment]

Chairperson Spiritis: Thank you.

Ms. S. Mechler: Mhmm.

Chairperson Spiritis: Any other questions from any of the Board Members?

[Pause]

Chairperson Spiritis: Okay.

Mr. Director. Any other presentations?

Executive Director Niemann: If I may, ask the representative from GlobalTech to provide an update regarding the ongoing well field maintenance and well field project.

Chairperson Spiritis: While we're waiting for this person to get up and put the presentation on, can you.., you spoke briefly before about staffing and reducing staffing.

Are you taking into consideration the new water plant and how many people you will need to work at the new water plant and training those people now so they'll be ready when the new water plant is open?

Executive Director Niemann: Mr. Chair, if I may?

Chairperson Spiritis: Yes.

Executive Director Niemann: Yes.

And.., and that's why, if you notice, a lot of the reduction in Staff did not come anywhere from operations. We will need some specialized individuals at the new water treatment plant but it really depends on being able to meet those salary needs within the Utility industry.

A lot of those positions are higher level, making upwards of one thirty to $160,000 for individuals that deal with computers and what not, instrumentation. And so, it may be more economical, especially with a brand new plant, to have a contractor do that where we're not needing it all the time.

As the plant ages, it may be more economical than to have somebody full time.

Chairperson Spiritis: Okay.

So, this is gonna be more of an automated plant, more high tech, obviously, and you're gonna need special people to be able to handle that.

Executive Director Niemann: [Stammer] everything will be automated.

Chairperson Spiritis: Okay.

So, it takes so long for you to hire Staff, shouldn't we be starting now and.., and getting somebody.., getting these.., some of these people onboard? I mean, I understand that our plant won't be.., our existing plant isn't as sophisticated but shouldn't we be bringing these people on right now and getting them used to the system and.., and the people that are here?

Executive Director Niemann: Mr. Chair, if I may?

Chairperson Spiritis: Yes.

Executive Director Niemann: Yes.

We are already starting to bring on, you know, specialists in the fashion that we have openings for the.., the current Utility. A lot of those positions are gonna transition to the Utility and the new water treatment plant.

But, in the sense of training, our current water treatment plant operators are being sent to short schools which talk about membrane treatment, ultrafiltration treatment, and a variety of other trainings that really will help them get their legs underneath them as they start this transition to the new plant.

Chairperson Spiritis: Can you just explain to the public what ultrafiltration and membrane, what's the difference between that and the.., and the existing plant, a lime softening plant?

Executive Director Niemann: Yeah.

So, lime softening uses, basically, coagulation and flocculation. We basically take micro molecules and make them into macro molecules. Those molecules settle on the bottom. And then we blow them up and the water, basically, is sifted off the top and then filtered.

With the new plant, there will actually be a physical barrier that we drive water through, splitting off with the good water to the bad water in layman's terms.

Ultrafiltration and membrane filtration it's a similar principal, it's just the difference in membrane and the driving force it takes to push it through.

Chairperson Spiritis: Right.

Thank you.

Executive Director Niemann: You're welcome.

Chairperson Spiritis: Would Global…

Executive Director Niemann: It does not look like there's a representative from…

Chairperson Spiritis: From GlobalTech?

Executive Director Niemann: …Globaltech.

I would be happy to provide an update regarding our wells. So, over the past…

Chairperson Spiritis: Can you.., can you…

When you give your presentation, can you tell us how many new wells and how many rehabilitated wells?

Board Member Miller-Anderson: I have a question first.

What…

Chairperson Spiritis: Yes.

Board Member Miller-Anderson: Where are they?

Why are they not here?

Executive Director Niemann: Ma'am, I do not know.

They.., they were notified of this meeting. I will find out afterwards.

[Inaudible audience comment]

Chairperson Spiritis: Okay.

Board Member Miller-Anderson: Can they provide a written update?

Executive Director Niemann: Yes, ma'am.

Board Member Miller-Anderson: Okay.

Chairperson Spiritis: Okay.

Director.

Executive Director Niemann: So, as far as well field rehabilitation, the primary focus right now is performing what we call Silt Density Index.

We've had JLA, which is our hydrogeologist team, at most of our well sites, collecting that information to see how frequently and how efficiently the membranes and the ultrafiltration will work to be able to filter the water and then to clean it at the new plant.

In addition to that, we have, as Mr. Omar was saying, 2015A, located at Washington Elementary, is about two and a half to three weeks away from being put into service.

Outside of that, GlobalTech has worked on all of our wells to replace fencing, flow meters, and start acidifying several of our wells. The hope there is to increase the withdrawal. And then also, in preparation for our sanitary survey, which is our biannual way of having.., I'm sorry, twice every ye'.., or, once every two years, they come on site and they go to every site, and they will, basically, a report card to see what is needed and what is being done as far as preventive maintenance, verification and calibration of meters.

And so, they will be here in late November. And, we're in full preparation of that inspection.

Chairperson Spiritis: Okay.

So, we.., we've had a number of issues with this whole project. Correct? We.., we found train tracks where we were gonna put a well. We had other issues with the wells, with rehabbing wells.

And, we decided to put in new wells, is that correct?

Executive Director Niemann: We did decide, as part of this new water plant to put in two surficial, or Biscayne Aquifer wells.

Those were actually permitted by the Utility in 2015A.., or, 2015 and that's why they had the.., the name 2015, those are the years that they were permitted. And, because they were already permitted, we went ahead and did them as part of this project.

Chairperson Spiritis: Are.., [stammer]…

I read in the paper today about West Palm Beach, I assume you did as well. Is their tapping into the Floridan aquifer gonna have any impact on us?

Executive Director Niemann: I.., I don't wanna say yes or I don't wanna say no.

But, generally, they're spaced out far enough that the impacts are minimal from well to well.

Chairperson Spiritis: Right.

'Cause this is sort of a sole source aquifer for many of us.., many of the communities in this area and we might wanna do some more research into that. And, if necessary, take whatever action, or maybe we can work something out with West Palm Beach.

Executive Director Niemann: Yeah.

Mr. Chair, if I may?

Chairperson Spiritis: Yes.

Executive Director Niemann: Most of those wells go anywhere from fifteen to sixteen hundred feet deep.

So, because they're so deep, the.., the impacts from one to the next are very minimal.

Chairperson Spiritis: Yeah.

But, that's what makes it sole source, you know, especially when you have salt water intrusion. As you can see, West Palm Beach is putting in a desalinization plant as.., as one of their options right now.

So, I think that they're.., they're thinking there's gonna be a lotta water coming out, there'll be saltwater intrusion into this aquifer sooner or later. So, they're gearing up for this in the future.

So, I think that we're gonna have to start thinking the same way. In a.., in a couple years, we better start thinking about some other alternatives to actually the aquifers that are there.

Executive Director Niemann: Mr. Chair, if I may?

Chairperson Spiritis: Yes.

Executive Director Niemann: So, the saltwater intrusion is not so much of an issue for our Floridan wells because they are so deep.

The Biscayne aquifer wells are absolutely impacted by the saltwater barrier. And, as that barrier, we've actually installed monitoring wells to be able to identify where that barrier's at. And then, the South Florida Water Management has completed several models to model how far it's traveling each.., each year.

Chairperson Spiritis: Alright.

You have test wells, right?

Executive Director Niemann: What's that?

I'm sorry?

Chairperson Spiritis: You have test wells for saltwater intrusion?

Executive Director Niemann: Yes, sir.

We do.

Chairperson Spiritis: Right?

Yeah. I know. I.., I worked in a municipality where we went down twelve to 1,400 feet into what we called the Lloyd Aquifer. It ended up becoming a sole source aquifer and we ended up having to sue New York City to keep them from.., they actually wanted to pump into the aquifer, wastewater and other.., other water, which would've, obviously, disrupted clear water for the areas in Nassau County in New York. But, you can get saltwater intrusion 1,200 feet.

So, we just gotta keep an eye on those test wells.

Executive Director Niemann: Yes, sir.

Chairperson Spiritis: Okay.

Thank you.

Any other questions on.., on GlobalTech?

[Pause]

Chairperson Spiritis: Any other presentations…

Executive Director Niemann: Yes.

I do…

Chairperson Spiritis: …Director?

Executive Director Niemann: …have one other final…

Chairperson Spiritis: Yes.

Executive Director Niemann: …presentation.

I'll call a representative from U.S. Water to give their final presentation.

Chairperson Spiritis: Yes.

Executive Director Niemann: U.S. Water has not been onsite for at least, about, the past two and a half months but we wanted to give one final report to the Board before they are totally out.., without the contract.

Board Member Lanier: So, do we have a report from them, Chair?

Executive Director Niemann: Yes, ma'am.

You will get a copy of the report.

Chairperson Spiritis: Okay.

Thank you.

Mr. Miller.

Mr. M. Miller: Good evening, Board, Chairman, and Mayor, and Administration. My name is Mike Miller. I am the Senior Project Manager for U.S. Water.

And, as far as a report, we have finished a draft of the final report. I will be sending that to Mr.., I'm sorry, Mr. Josh tomorrow. I'm sorry, next week, so he can review it himself. But, we anticipate to have the complete final report ready for.., by next week.

Chairperson Spiritis: Miller, in your report, you're gonna make recommendations for future studies or whatever else we.., we're gonna need?

Mr. M. Miller: Oh, absolutely.

We do have a.., one section that specifically addresses recommendations that we.., that we came up after being here for almost two years.

Chairperson Spiritis: Okay.

Any other questions from Board Members?

[Pause]

Board Member Guyton: Yes.

Board Member Lanier: So…

Chairperson Spiritis: Yes.

Board Member Guyton.

Board Member Guyton: We've been trying to identify ways to reduce the cost of the water plant.

As a matter of fact, I.., I see the owner here. I'm sorry, what's.., what the owner's name?

Mr. M. Miller: Yeah.

That's Mr. Gary Deremer. He's our CEO, CEO of the company.

Board Member Guyton: I.., I meant CEO.

Could you come to the mic, please?

Mr. G. Deremer: Good evening. For the record, Gary Deremer, President and CEO of U.S. Water. Thank you for having me.

Board Member Guyton: Mr. Deremer, I know that you've been in this business a long time.

You're familiar with some of our challenges and struggles, and I [stammer]… We had a brief conversation about how we may be able to mitigate some of the costs. And, I.., I thought that you all were going to work up something for Mr. Niemann to take a look at and possibly get to us.

Was that ever done?

Mr. G. Deremer: It was.

Mike?

Mr. M. Miller: Yes.

I.., I did send that proposal. I don't know if it got to everyone but I sent it to Josh, as well as the Board Members.

Board Member Guyton: Okay.

[Inaudible comment]

Mr. M. Miller: And, the Util'.., and the City Manager.

Board Member Lanier: Well…

Board Member Guyton: Uh…

I'm sorry?

Board Member Lanier: I haven't seen anything.

Board Member Guyton: I haven't checked my email.

But, I.., Mr. Niemann has it though, don't you? I.., I haven't seen it either, for the record.

Executive Director Niemann: Mr. Chair, if I may?

Chairperson Spiritis: Director.

Executive Director Niemann: Yes.

I believe I received that. I wanna say it was Monday or Tuesday morning I.., I received it. So.

Chairperson Spiritis: And, you'll make sure the Board gets a copy of it, please?

Executive Director Niemann: I thought everybody was on it.

But, I will forward it to you first thing in the morning with that Phase 1 study.

Chairperson Spiritis: Okay.

Board Member Miller-Anderson: Question.

Chairperson Spiritis: Yes.

Board Member Miller-Anderson: What., what is it that we're receiving?

Board Member Guyton: Uh…

Board Member Miller-Anderson: What is it?

Board Member Guyton: I met with the CEO and Mike and, as I've been having my discussions about mitigating the cost of the water plant, it was indicated that they may have some suggestions.

I suggested to them to reduce it to writing so that Staff can review it and Board Members.

Chairperson Spiritis: These are cost savings recommendations…

Board Member Guyton: Yes.

Chairperson Spiritis: …correct?

Board Member Miller-Anderson: Can you…

Board Member Guyton: Wait.

Board Member Miller-Anderson: Can he provide a Cliff Notes version right now?

Until we get the… So we're not kinda left in suspense until we get this email?

Mr. G. Deremer: Mr. Chair?

Chairperson Spiritis: Yes.

Mr. G. Deremer: So, what we had discussed was…

[Stammer]… You guys know us for our work that we've done with the City on the water plant. Right? Helping the City and Josh, you know, get to the point where we're at today. Right?

But, we do a lot of other things for our clients. And, for me, personally, I.., I work in more of the commercial field even though I'm a licensed operator and a licensed contractor, I work on the commercial and business aspects of our clients, for our clients to look at the overall

practices of those Utilities and how it might reflect on rates and direction of future for growth, and.., and all the kinda things you would see in the commercial aspects of owning and operating a public Utility [inaudible].

So, what we put together wasn't really associated with just the plant, it was to have someone like us look at the system, in its totality, with the primary focus on what alternatives could we provide the Board that might have an impact, a positive impact, on the residents and the rates they pay?

So, what we were looking at was everything, like, you guys have talked extensively, you know, listening to the workshop today about, you know, unbilled revenue, lost water. You know, those kinds of things.

And, there's a.., there's a number of issues that come up when you talk about lost water, and you talk about rate increases at the level that you're suggesting here and you have, you know, really have issues.., issues of fairness.

So, when you do a rate study, as Mr. Sherman said, and it's based on a twenty percent loss of water as.., for example, then that means that there are people probably getting water that they're not paying for and there are people that are paying for more water than they really are getting. In reality. Right?

So, one of the aspects was to look closely at your entire meter reading, billing system, your processes of testing meters, accuracy of meters, and to put together some kind of plan going forward to correct that problem.

And then, really it was to look at correcting the problem and what correcting that problem will mean, ultimately, to the citizens of Riviera Beach.

So, it wasn't just recommendations, it was to try to take those items and drill them all the [stammer].., all the way down to a meaningful look at.., at how everything would affect if we.., we did some of these things.

So, revenue is one item.

A second item is looking at overall efficiencies. Right? So, the City of Riviera Beach isn't the only City that runs a water and wastewater system. So, there's a lot of industry standards, benchmarks, America water standards, so a part of that effort I thought to compare that.

How does the City rank against its peers with relative to, you know, to things of staffing levels, breaks per hundred miles of pipe? All of the costs associated with.., with the system, how it might point us in a direction to say, we should look more carefully at that.

You know, when I met with the City Manager, there was discussions of things like, maybe we have to do layoffs. Well, it'd be interesting to know what those.., those levels of the peers are.

So, maybe you could make a good, intelligent, informed decision about where you might look to reduce costs.

Board Member Miller-Anderson: Alright.

Chair?

Chairperson Spiritis: Commissioner Miller-Anderson.

Board Member Miller-Anderson: Okay.

So, it's more of how we could possibly privatize certain areas, is basically what this is about, right?

Mr. G. Deremer: No, no.

Not at all. I don't think privatization goes into that. It just looks at a comparison for how you might act. For example, we thought, even the.., the reimbursements to the general fund, you're running two different Enterprise Funds here, right?

You're running your Utility fund, you're running your general fund. You know, a lot of those transfers that go out are [stammer] obviously affecting rates. Are those transfers fair and equitable to the ratepayers of.., of the system.

So, it really looks at everything in its totality to try to develop options and to give a thorough understanding of what you may do to mitigate the effects of rates on the citizens, with the rate increase that's been proposed.

Chairperson Spiritis: Did you…

[Inaudible comment]

Chairperson Spiritis: Did you look into the $7 million that the City gets reimbursed for their Staff from the UD District?

Mr. G. Deremer: That's one of the items that we're... I'm sorry. That's one of the items that we should look at to make sure that that reimbursement is justified. Right? So, that particularly comes into effect, and part of the reason for the legislation that you guys had discussed earlier where you're eliminating your surcharge just to try to.., to level the [stammer] playing field on that, so that cities don't take advantage of charging more money to the Utility funds and then, you know, citizens outside of the City limits, not.., not taking, you know, not getting, you know, kind of their fair allocation of costs.

So, really, it was.., it's really not a privatization look, it's a look at what we could do, based on our experience, and.., and I'm quite, you know, familiar with your consultants and, you know, all your rate folks.

So, we.., we're.., we're used to working with financial advisors, Raftelis, to try to collaboratively work to see what could be done to mitigate your rate increase?

Board Member Miller-Anderson: Okay.

Mr. Chair?

So, I mean, if this is something that we really wanna truly entertain because of the fact that we're not familiar with it and it seems a little more [stammer] in depth than just the Cliff Notes version.

If you all are looking to bring this back on the Agen'.., as an Agenda item, that's fine but I'm not trying to digest what he's saying right now because that wasn't on the Agenda. And also, the email with the information that he sent, we would need to review.

So, I thank you for that. I appreciate that.

Mr. G. Deremer: You're quite welcome.

Board Member Miller-Anderson: And, you know, if you all are looking forward to having a deep conversation on it, maybe we can advertise it and put it on another Agenda.

But, I'm not interested in it but I'm just telling you that having this conversation right now is probably not the best 'cause it.., we haven't had a chance to really digest it.

Board Member Guyton: Mr. Chair?

Chairperson Spiritis: Yes.

Board Member Guyton.

Board Member Guyton: Yes.

And, thank you very much. But, my colleague's comments are very interesting because she was the one that indicated that she needed more information because she didn't know what we were talking about.

Board Member Miller-Anderson: No.

I have no problem…

Board Member Guyton: Wait, wait, wait.

Board Member Miller-Anderson: …with what he said.

Board Member Guyton: Don't inter'... I didn't…

Chairperson Spiritis: Please, one…

Board Member Miller-Anderson: No.

Board Member Guyton: …interrupt you.

Chairperson Spiritis: …at a time.

One at a time.

Board Member Miller-Anderson: I'm just saying…

Board Member Guyton: You'll have.., you'll have your opportunity.

Board Member Miller-Anderson: …I didn't have a problem with what he said, I'm just saying maybe we can have a deeper conversation at another time.

I didn't know he was gonna go that deep. I asked for a Cliff Notes version.

Chairperson Spiritis: Okay.

Commissioner…

Board Member Guyton: Okay.

Chairperson Spiritis: …Guyton.

Board Member Guyton: Yes.

Thank you. Thank you.

So, I.., I found that to be very interesting that they made the request and now they're saying that the request they made is not appropriate to be exercised now. But, I.., I [inaudible] up on her suggestion about putting it on the Agenda.

One thing we haven't been as a Board, was been assertive about looking at different options of how to save our residents money [stammer].., these water rates that keep going up thirty percent.

We talk about how much we care about it, the passion we have to try to bring them down, but no ideas coming to the table. We're not talking to anybody. We're not talking to the experts. We're not asking those in the industry what kinda ideas can you give us to consider?

Some may not particularly care about a particular company so they don't have, I guess, an open mind to receive some different options. For me, I will talk to anybody that can give me some options of how to reduce the cost to our residents.

Whether I take them or not, I wanna hear those suggestions. And, if we can have U.S. Water come back, and we'll put them on the Agenda, and we'll have a fruitful discussion. And, certainly, them being a company, I don't expect them to reveal all of their options at the meeting but we can discuss how they may be able to help us and at what cost?

That's the type of discussion that I expect to have. But, I don't expect them to come back with this is what we can do and boom, boom, boom and give us their plan and we haven't entered into an agreement with them. So, I know the parameters. Okay.

Mr. Deremer. Is it Deremer?

Mr. G. Deremer: I agree.

I think it.., it.., what it takes, for all the Commissioners and the Staff, is commitment. We have to work collaboratively to try to uncover the facts and provide the options.

And we have to have access to the Staff, like your Finance Department and your rate consultants, and potentially your FA so that we can all work together with the same goal in mind of how to reduce impacts to the residents.

If we all do that, we'll be able to provide you with some information that you can use in the future to make decisions.

Chairperson Spiritis: So, Director Niemann, please work with U.S. Water and come up with a time where we could put this on the Agenda, 'cause this is certainly something [inaudible] be looking into and working on immediately.

Executive Director Niemann: Mr. Chair…

Board Member Guyton: [Inaudible] and…

Executive Director Niemann: …if I may?

Board Member Guyton: …options.

Yes.

Board Member Lanier: Mr. Chair?

Chairperson Spiritis: Let.., let.., just let Mr. Niemann respond and then we'll go to…

Executive Director Niemann: So, are you looking for me to bring it as a discussion item or.., or an item?

Because…

Chairperson Spiritis: Well, let.., let's see how you work it out with U.S. Water.

We can discuss it one on one before to see if it's ready for an Agenda item or whether it should be a discussion item, and then, the next…

Executive Director Niemann: Okay.

Chairperson Spiritis: …meeting, an Agenda item.

Executive Director Niemann: Yeah.

I believe.., I read through the proposal and.., and a thousand foot level. Like I said, we just got it earlier this week. I.., I would ask that we brought it back for you guys to discuss and deliberate on whether you would like the.., that option.

And then, if we did do it, it would need to come in the beginning of Fiscal Year 2027. Since we do not have anything of this nature budgeted in the FY 26 budget, it would be hard to take that kinda money from this current budget right at the end of the Fiscal Year.

Chairperson Spiritis: Okay.

But, why don't you discuss it with U.S. Water. [Inaudible] discussions. Any Board Member can do the same and we'll see if we can get.., get it on an upcoming Agenda item for discussion. Hopefully, soon, not.., not later.

Executive Director Niemann: Ye,s sir.

Board Member Miller-Anderson: Mr. Chair?

Chairperson Spiritis: Yes.

Board Member Miller-Anderson: Mr. Niemann, have you had a conversation with Mr. Wilkins, with him?

Executive Director Niemann: No, ma'am.

I have not.

Board Member Miller-Anderson: Okay.

So, Mr. Wilkins is not aware of any of this that we're talking about, other than possibly being on the email?

Executive Director Niemann: Mr. Chair, if I may?

That.., that's the extent, is Mr. Wikins just on the email. We have not had an opportunity. He's been out so…

Board Member Guyton: Yeah.

And, Mr. Chair?

Chairperson Spiritis: Yes.

Board Member Guyton: My discussion was had months ago when I realized the escalation of water rates.

Long before Mr. Wilkins came, I.., we've been out here trying to pound the pavement… [Inaudible audience comment]

Board Member Guyton: …looking for options.

Chairperson Spiritis: Please hold your.., hold your voices down.

Board Member Guyton: So, no.

Mr. Wilkins, not, at least, by me, hasn't been part of this discussion since he's only been here a short time. But certainly, he would be if it were to move forward.

Chairperson Spiritis: Thank you for your comment, Commissioner Guyton.

I.., I also had a similar discussion with U.S. Water. I guess we're all thinking on the same wavelength right now, we wanna save as much money as we can, for the community and, at the same time, provide the best quality water that we can.

So, thank you for that.

Board Member Lanier: Chair?

Chairperson Spiritis: Yes.

Commissioner…

Board Member Lanier: I have…

Chairperson Spiritis: …Lanier.

Board Member Lanier: Yeah.

So, when are we gonna receive.., are we receiving a final report from U.S. Water?

Board Member Guyton: Thank you, Mr. Deremer.

Mr. M. Miller: Yes, ma'am.

Board Member Guyton: Thank you for your comments.

Mr. M. Miller: As I said earlier, we have completed a draft.

And, we're just going through the draft to make sure that we tighten up any loose ends in that. But, you will be receiving a full report.

Board Member Lanier: Okay.

So, then I would definitely want to have a final report before we move into any other business with this company.

Secondly, I'm very leery of people telling me they're gonna save me money when I got to pay them money.

Thirdly, I wanna make sure that this is something that is competitively bid. It is not something that, because we've dealt with U.S. Water, that we're gonna go straight to U.S. Water to do it.

This is something that we need to figure out what we need to do, or what we want to happen and then we put that out for a bid.

Chairperson Spiritis: Anything else?

Board Member Lanier: That's it.

Chairperson Spiritis: Well, clearly, I agree with you.

And we have to follow all proper procurement procedures in.., in hiring, whether it be for capital improvements or whether it be for consulting services.

Any other questions from.., for U.S. Water from the Board Members?

[Pause]

Chairperson Spiritis: None?

I just wanna remind the public that we'll be taking public comments up until 7:30.

Mr. Miller, thank you very much. And.., and U.S. Water, thank you for everything you've.., you've been doing. You.., you helped the City tremendously at a time in need. And, thank you for stepping up and being there. We all appreciate…

Board Member Lanier: Right.

Chairperson Spiritis: …everything that you've done.

[Inaudible comment]

Mr. M. Miller: Thank you [stammer].

Thank you for having us.

Chairperson Spiritis: Yes.

Board Member Lanier: Yes.

Thank you.

I wanted to say, Chair, that, you know, you say that you.., you.., you thank them for.., for helping us but, you know, that's what they get paid to do. And, I appreciate the help. I do. But, you know, don't make it as if…

Why you're not.., can't control your audience?

Chairperson Spiritis: Please. Please [inaudible] respect…

Board Member Lanier: Um…

Chairperson Spiritis: …the speakers.

Board Member Lanier: That this is what people get paid to do.

We appreciate it. Yes, we do. But, people get paid to do this work.

Chairperson Spiritis: Yes.

I agree. But, many people get paid to do work and they don't it. They did…

Board Member Lanier: Exactly.

Chairperson Spiritis: They did come across, and they did provide tremendous services to the Utility District.

And.., and I, personally, thank them for the work you've done. Thank you.

Mr. M. Miller: Thank you, Chair.

We appreciate it. Thank you, Board.

Mr. G. Deremer: You're very welcome.

And, we.., we appreciate the opportunity to work with you.

Chairperson Spiritis: Thank you.

Director Niemann, any other presentations?

Executive Director Niemann: No, sir.

That's the final presentation.

Chairperson Spiritis: Okay.

Clerk.

5. ITEM NO. 5

PUBLIC HEARINGS

6. ITEM NO. 6

ITEMS TABLED

REGULAR AGENDA

7. ITEM NO. 7

District Clerk Hall: Mr. Chair, we are on Item 7.

RESOLUTIONS ON REGULAR AGENDA

District Clerk Hall: Resolutions on Regular Agenda.

7a. ITEM NO. 7A

District Clerk Hall: Item 7a.

District Clerk Hall: **RESOLUTION NUMBER 35-26UD: A RESOLUTION OF THE BOARD OF DIRECTORS OF THE CITY OF RIVIERA BEACH UTILITY SPECIAL DISTRICT, PALM BEACH COUNTY, FLORIDA, APPROVING THE USE OF THE ALTERNATE CONTRACT SOURCE (ACS) NO. 43230000- NAPSO-16-ACS FOR CLOUD SOLUTIONS FOR CHECK POINT'S SECURE ACCESS SERVICE EDGE (SASE) PLATFORM AND FORTIGATE RUGGED 70G-5G-DUAL FOR SCADA UPGRADES FROM ATLANTIC DATA SECURITY IN AN AMOUNT NOT TO EXCEED $628,791.00 FROM PROJECT CODE 18146, SCADA UPGRADES ACCOUNT; AND AUTHORIZING THE UTILITY SPECIAL DISTRICT FINANCE DIRECTOR TO MAKE PAYMENTS FROM PROJECT CODE 18146 IN AN AMOUNT NOT TO EXCEED $628,791.00; AND PROVIDING AN EFFECTIVE DATE.**

JOSHUA NIEMANN, UTILITY SPECIAL DISTRICT EXECUTIVE DIRECTOR, (561) 845-4185

District Clerk Hall: Mr. Chair, we do not have comment cards on this Item.

The acceptance of comment cards is closed.

Chairperson Spiritis: Is there a motion…

Board Member Guyton: Wait, wait.

Before we get started. In my Agenda briefing, there was an Item that didn't have legal sufficiency. Is this that Item?

Assistant City Manager Copin: I do not believe so.

No, sir. We removed…

Board Member Guyton: It's not this…

Assistant City Manager Copin: …that Item.

Board Member Guyton: It's not that Item?

Assistant City Manager Copin: No.

It was removed.

Board Member Guyton: Okay.

I just wanted…

Assistant City Manager Copin: Thank you, sir.

Board Member Guyton: Okay.

So moved.

Chairperson Spiritis: Okay.

Moved by Commissioner Guyton.

Is there a second?

Vice Chair Davis Panier: Second.

Chairperson Spiritis: Okay.

Commiss'.., Vice Chair Davis Panier seconds the motion.

Any.., any di'.., presentation from Mr. Niemann on this, please?

Executive Director Niemann: Mr. Chair, if I may?

Chairperson Spiritis: Yes.

Executive Director Niemann: So, as the Board is aware, the Utility has been working on upgrading our SCADA network within the existing plant and then we'll be migrating that over to the new water treatment plant.

I have my… The.., our IT Director, Mr. Sheehan, here. He can provide some information as to what this [stammer] actually allows the Utility to do. But, from a very rudimentary

standpoint, it will allow our outside contractors to be able to proxy into our computers, be able to do work from offsite, and then do.., be able to [stammer], under the umbrella of IT, and in a safe and secure manner.

Chairperson Spiritis: No.

Before.., before he speaks, I just wanna go into, we had Lift Station 10 go down a couple weeks ago. Right? And, the alarm never made it to the water plant itself. Correct?

Executive Director Niemann: That's correct.

Chairperson Spiritis: Right.

You…

Executive Director Niemann: The alarm never…

The alarm made it there but it never alarmed.

Chairperson Spiritis: Yeah.

So, are.., what are you doing to correct that?

Executive Director Niemann: So, these are some of those exact upgrades…

Chairperson Spiritis: Right.

Executive Director Niemann: …that will…

Chairperson Spiritis: So…

Executive Director Niemann: …will address those issues.

Chairperson Spiritis: So.., so these are new control panels and what not that we would need to.., to make sure that that doesn't happen again?

Executive Director Niemann: Correct.

If the Board has already actually procured and manufactured all of the control panels for our lift stations and we are actively moving through the installation of those control panels.

Chairperson Spiritis: Right.

So, when we had that failure, water.., we had sewage going to the intracoastal, correct?

Executive Director Niemann: Yes, sir.

Chairperson Spiritis: Right.

So, this is very important.

Okay. Director Sheehan.

Interim IT Director Sheehan: Good evening, Council. Ben Sheehan, Interim IT Director.

I'm.., I'm basically here to [stammer] answer any questions. As Director Niemann stated, this is an upgrade primarily for the SCADA system that would provide the type of monitoring you're.., you're discussing right now.

The devices in question, if you look at the backup documentation, you'll notice there the Fortigated rugged dual hardware because, the purpose of the hardware is to provide redundant communication links, redundant power supplies, redundant monitoring.

So, if there is an event at one of the.., at the lift stations or any other equipment, these provide the best chance of getting that.., that notification back to the water treatment plant.

The other portion of this is actually a software component.., that I don't wanna get too much into details as it's a cybersecurity item but this allows the secure communication both for the devices for the water treatment plant and the Staff and contractors that support the operations.

And, if you have any questions, I'll be glad to answer them.

Chairperson Spiritis: Any questions from the Board?

Board Member Lanier: Yeah.

I have a question.

Chairperson Spiritis: Yes.

Commissioner Lanier.

Board Member Lanier: This is.., this.., this…

Why was this not included in the Capital Improvement Plan that we had months ago?

Executive Director Niemann: Madam Chair?

I mean, Mr. Chair, if I may?

Chairperson Spiritis: Yes. Director Niemann.

Executive Director Niemann: Can you repeat that, ma'am?

I'm...

Board Member Lanier: Why was this not included in the Capital Improvement Plan that we had.., that we saw months ago?

Executive Director Niemann: Mr. Chair, if I may?

Chairperson Spiritis: Yes.

Executive Director Niemann: It.., it was.

So, we.., this is an active project that I believe was started in Fiscal Year 2024 and.., and has been ongoing since the start of my time.

Board Member Lanier: So, it's an active project but you're using an alternate contract source?

You.., you had.., you didn't use the same source from before?

Executive Director Niemann: So, each one of the SCADA piece.., pieces and components are separate items.

So, when we do the project, there will be components that come from various different manufacturers and agencies.

Board Member Lanier: Yeah.

And that's why I'm concerned about.., it's.., it's being passed as.., as one single Resolution because there's many pieces to this.

And then… So, how would vendors evaluate it?

Mhmm.

Executive Director Niemann: In.., in what sense, ma'am?

Board Member Lanier: In.., in one sense that you have an alternate contract source. And, I see this alternate contract source for Cloud Solutions, why is it that this wasn't evaluated, this.., this alternate contract source wasn't evaluated?

Executive Director Niemann: So that.., that is just the piggyback contract.

That's.., and that's the name of the piggyback contract, ACS.

Board Member Lanier: So there's a lotta piggybacks on here tonight.

It.., but it.., it doesn't say that in here though. It doesn't say piggyback. It.., it just.., it just… That's why I'm asking about an evaluation and vendors because I don't see it as a piggyback listed in none of the backup.

But then, I also see that you say alternative.., alternate contract source. Is that the same thing as a piggyback?

Executive Director Niemann: It is.

Yes, ma'am.

Board Member Lanier: So then that should've been stated 'cause I.., now I'm looking for vendors and evaluation and scoring matrix.., scoring matrixes.

Executive Director Niemann: Yeah.

This.., this was not advertised by the City. This was a piggyback that we help.., with the help of IT, identified a contract that this [stammer] equipment and software had been procured before and we piggybacked off that contract.

Board Member Lanier: So, if this was a part of the budget…

If this was a part of the budget originally, how much have we spent in this particular project? This SCADA security?

Executive Director Niemann: I don't know offhand, ma'am, but I can get you that number.

Board Member Lanier: And so, when was the last independent audit done for the SCADA system?

Executive Director Niemann: When you say audit, do you mean in terms of the.., this project itself or in terms of just the [stammer].., the SCADA system…

Board Member Lanier: Just overall be'…

Executive Director Niemann: …in general?

Board Member Lanier: I mean… Yeah.

I'm saying overall because what you're doing is, you're looking to remediate some issue that's going on. So, when was the last audit that you had to let me know what was happening in this whole system?

Executive Director Niemann: So, I don't believe there has been one done.

Really, what we're trying to re'.., remediate here is the existing water treatment plant is run off of a system and I don't wanna share what it is because of how many cybersecurity threats.

Board Member Lanier: No.

I.., I…

Executive Director Niemann: But, that is the ex'.., the original system. They don't support that system any longer, they don't make the components to support that system. Any of the components that we do use are all rebuilt. They're actually sent to a specialized company.

And so, we're migrating to the newer technology with the assistance of IT.

Chairperson Spiritis: Director Niemann, if I could just…

Councilperson Lanier: Let me finish.

Chairperson Spiritis: Well, just my privilege as the Chair.

Is.., is this system one of the systems that we put in place to ensure that we don't get hacked?

Executive Director Niemann: Yes.

This is one of many.

Board Member Lanier: Chair?

Chairperson Spiritis: So, it's a very important system.

Board Member Lanier: Yeah.

That's…

Chairperson Spiritis: Okay.

Commissioner Lanier, you…

Board Member Lanier: Yeah.

I…

Chairperson Spiritis: …wanna finish?

Board Member Lanier: I'm.., I've got a problem with this because I don't know how much money has been spent in the SCADA system overall, because I've seen this before.

I don't know where there's any immediate threat or any.., any vulnerabilities, I mean, in terms of what's happening overall. We've spent money with this before. I don't know how much.

And now, we're up to another six hundred and.., $600,000 for this and I don't know how much has been spent. I don't know what the audit looks like in terms of what we're going to remediate. None of that.

And then too, it's not even been bid out, it's been piggybacked off of someone else. So, that's a lot of questions to be had for $600,000 that I have no idea how this works.

And I say that because it wasn't mentioned it was a piggyback, it wasn't mentioned where there's been an audit that was done to let you know that there are issues. There wasn't any information about previous expenditures on the same project.

It just looks.., it looks like it's a whole different thing but you're telling me that it's not. So, this is too many questions. I can't support that. It's.., it's too many questions in.., in regards to what's.., what's actually happening here.

Board Member Miller-Anderson: Mr. Chair?

Chairperson Spiritis: Yes.

Commissioner Miller-Anderson.

You're finished, Commissioner Lanier?

Board Member Miller-Anderson: Would Mr. Sherman…

Board Member Lanier: Yes.

Board Member Miller-Anderson: …have the numbers?

Chairperson Spiritis: Okay.

Commissioner Miller-Anderson.

Board Member Miller-Anderson: Would Mr. Sherman have those numbers?

[Pause]

Board Member Miller-Anderson: You.., you don't have them?

[Pause]

Chairperson Spiritis: Director Niemann, you can get us those numbers, correct?

Executive Director Niemann: Absolutely.

Board Member Miller-Anderson: So, we're gonna…

Chairperson Spiritis: Can you get those for us, please? In the next of couple days?

Executive Director Niemann: Absolutely.

Actually, following this meeting, I can go.., get on my…

Chairperson Spiritis: Okay.

Executive Director Niemann: …computer and get them.

Chairperson Spiritis: Okay.

And.., and before…

Board Member Miller-Anderson: I mean, we would need to have the numbers before we vote on the Item?

Board Member Lanier: Yeah.

Because we need to know how much we've spent on this so far.

Board Member Miller-Anderson: Go ahead.

Board Member Lanier: Go ahead.

District Finance Director Sherman: I.., I don't have them at hand but I can do the same thing and start looking them up [inaudible] if you wanna table this for right now, put it to the side and go on.

I'll try to see…

Board Member Guyton: Uh…

District Finance Director Sherman: …if I can get that number…

Chairperson Spiritis: Are you...

District Finance Director Sherman: …for you.

Board Member Guyton: Mr. Chair?

Chairperson Spiritis: Commissioner Guyton.

Board Member Guyton: Yes.

We are in a very volatile time where there are numerous of threats. If we do not have a backup to combat those threats, we should not put this on hold. I mean, the numbers are important, we need to go get them but we've been through an experience here in this City that cost us a lot of money through somebody hacking us.

And, it can happen within a brief period of time, and I'm not willing to take that chance, unless there's another backup that can deter and deflect any potential hacks that this water system may encounter.

Board Member Miller-Anderson: Mr. Chair?

Board Member Guyton: I'm not trying to not hold the USD accountable.

You must show the numbers, how much we paid for what. Those are legitimate questions. But, to say that we're not.., I'm not gonna support it right now because I need to see the numbers. No.

Because, if we get hacked, it could cost us more to try to get out of that situation than it is to have the protection already in place.

Board Member Miller-Anderson: Mr. Chair?

Board Member Guyton: So…

Wait. I'm not done.

So, I would be willing to support it tonight and provide the numbers. If there.., there's an issue, the issues can still be dealt with. The audit can still be done. Everything that's being requested can still happen.

So, I'm not willing to put the residents at risk like that with.., with.., with.., with some pause in the protection.

Board Member Miller-Anderson: Mr. Chair?

Chairperson Spiritis: You finished, Commissioner?

Board Member Miller-Anderson: Mr. Chair?

Chairperson Spiritis: Yes.

Commissioner Miller-Anderson.

Board Member Miller-Anderson: I thought Mr. Sherman was asking for us to maybe put this towards the end a little bit of this Agenda while he tries to pull up the numbers.

He didn't say table it to another month or another meeting, he said if we could go continue on, not vote on this particular Item right now while he looks for the numbers. We can come back to the Item once he has the numbers.

Chairperson Spiritis: Okay.

Would you like to make a…

Board Member Miller-Anderson: And.., and…

Chairperson Spiritis: …motion for that?

Board Member Miller-Anderson: You know, I.., I don't, you know, [stammer], trying to put fear into residents that we're gonna get hacked and blah, blah, blah.

Board Member Guyton: No.

That's not any fear of...

Board Member Miller-Anderson: I'm sorry. I'm still talking.

[Inaudible audience comment]

Board Member Miller-Anderson: It.., you know, it's not…

I don't know why we do that because, while it's important, we need to make that what we're doing is not just giving money away foolishly, like we've done in the past. And, very recent past.

It's not going to hurt us to take a moment to make sure that what we're doing makes sense. And, as I said a minute ago, Mr. Sherman asked to give him some time to find the numbers tonight.

Board Member Lanier: And also too…

Chair?

Chairperson Spiritis: Commissioner Lanier.

Board Member Lanier: I think that the issue for me too is that, you know, he said that there's never been an audit done.

I mean, how is that possible when we've been spending money on this? That we don't know where the areas of vulnerability or if it's an immediate threat to public safety or whatever the case may be. We have no idea of that.

We've been spending money and it appears that we've been spending money because that problem came up and then we.., we fixed that problem and another one came up. And then…

But, there has not been an audit of the system to determine where the threats are. And, that needs to be done because it appears that we're gonna keep spending money unless we know where the immediate threats are and the whole system has been evaluated.

And, I still don't like the fact that it was not done on a competitive basis.

But, go ahead.

Chairperson Spiritis: Finished?

Board Member Lanier: I am.

Chairperson Spiritis: Thank you.

Any other questions for Mr…

Yes?

District Finance Director Sherman: Chair, [stammer], just…

Chairperson Spiritis: Director.

District Finance Director Sherman: Just, again, I don't have details to the vendors that have [inaudible].

But, out of this project, they've spent $147,000 this year.

Board Member Miller-Anderson: What's the total of it?

Available for spending?

District Finance Director Sherman: So, the.., the total budget is just over $800,000.

So, with the one forty-seven and what they're spending now, pretty much cleans out the project.

Board Member Miller-Anderson: Okay.

Chairperson Spiritis: Director Niemann, is.., is that what you're gonna need or are you gonna be coming back to us again?

Executive Director Niemann: Mr. Chair, if I may?

Chairperson Spiritis: Yes.

Executive Director Niemann: I would digress to the IT Director to answer those questions.

Those are the ones.., the.., the Staff that is helping drive this project with their expertise in the.., the server and networking of the plant.

Chairperson Spiritis: Director Sheehan, before.., before you go into that, can you.., can you tell us, do you think that we're vulnerable right now in the old system?

Interim IT Director Sheehan: Absolutely, sir.

Chairperson Spiritis: Alright. And you think that we should move forward with this?

Interim IT Director Sheehan: Absolutely, sir.

The solution you see before you was created in cooperation and I'm sorry I'm neglecting to remember your contractor's name, McKinley…

Executive Director Niemann: McKim & Creed.

Interim IT Director Sheehan: Yeah.

This.., this was… They.., they are rolling out the SCADA system. This was the type of solution that they recommended. The hardware that's in use, you know, I'm not gonna get into specifics but it is something that Staff already supports, is familiar with.

And, this is not just the cybersecurity components, this is also really about sixty percent about the situation you eluded to earlier where an alert or an alarm didn't.., didn't make it to the appropriate person.

So, this is hardening the Utility District equipment, not just from a security perspective, but from a reliability performance perspective.

Board Member Miller-Anderson: Chair?

Chairperson Spiritis: Yes.

Board Member Miller-Anderson: What.., what brought…

Chairperson Spiritis: Commissioner Miller-Anderson.

Board Member Miller-Anderson: What brought about this Item now?

For this amount?

Executive Director Niemann: Mr. Chair, if I may?

Chairperson Spiritis: Yes.

Director.

Executive Director Niemann: So, originally, this project was started by the past Administration as part of their capital improvement project, and capital outlay was SCADA improvements.

And so, as I started, we took a long.., we took on that project, worked with IT, and that's where we're at with this point.

Board Member Miller-Anderson: And, it came up to the total to…

Executive Director Niemann: Right.., right under $800k, to what Mr. Sherman was sharing with you.

Board Member Lanier: So…

Chair?

Chairperson Spiritis: Commissioner Lanier

Board Member Lanier: So, I needed to ask, is there going to be an audit done to let us know where the vulnerabilities in the system are?

Because, it appears, as I said before, that we're fixing the problem as it comes up and we're not auditing the entire system to know what we need to look at in the future, because that.., it is an issue.

It is something that we need to… I mean, you would think that this would have an audit done and we would know where the vulnerabilities are at all times and not wait until something comes up.

So, that is something that needs to happen right away.

Chairperson Spiritis: Director Sheehan, do.., do you.., do you do a.., a vulnerability audit on our equipment every year?

Interim IT Director Sheehan: A audit may not be the right term in this instance but, an evaluation of the existing SCADA deployment, what was conducted, the current deployment.

And, you know, I don't wanna get into details but as Director Niemann, it is a.., a legacy system, to be polite. The current system was evaluated. The needs for the.., both the current water treatment plant and the planned expansion for the new water treatment plant were brought into place.

And, the operational needs of both Staff and the contractor to support the Utility District were brought into consideration when developing the plan.

Chairperson Spiritis: Any other questions from the Board?

Board Member Lanier: No.

Chairperson Spiritis: Are there any public.., there's no public comment, right?

That's it? We're finished? Alright.

Call the vote.

District Clerk Hall: Vice Chair Davis Panier?

Vice Chair Davis Panier: Yes.

District Clerk Hall: Board Member Guyton?

Board Member Guyton: Yes.

District Clerk Hall: Board Member Lanier?

Board Member Lanier: No.

District Clerk Hall: Okay.

Board Member Lanier: No.

District Clerk Hall: [Inaudible].

Board Member Lanier: No.

District Clerk Hall: Board Member Miller-Anderson?

Board Member Miller-Anderson: No.

District Clerk Hall: Chairperson Dr. Spiritis?

Chairperson Spiritis: Yes.

District Clerk Hall: The Item passes with Board Members Lanier and Miller-Anderson dissenting.

Chairperson Spiritis: Okay.

Board Member Guyton: Mr. Chair?

Chairperson Spiritis: [Inaudible].

Board Member Guyton: Well, maybe you're about to say what…

COMMENTS FROM THE PUBLIC – 7:30 P.M. – NON-AGENDA ITEM SPEAKERS (Three Minute Limitation)

Chairperson Spiritis: We're gonna go to public comments first.

Board Member Guyton: Okay.

Chairperson Spiritis: So, Clerk, public comment. How many cards? I saw you got a number of them.

District Clerk Hall: If you could read the rules of decorum into the record and then I'll start calling the names.

We have eight public comment cards at this time.

The acceptance of the cards is closed.

Chairperson Spiritis: Okay.

I just wanna make sure that everyone understands that we're committed to civility and decorum by officials, employees, and members of the public who attend the meeting.

Chairperson Spiritis: THE BOARD HAS ADOPTED RULES OF DECORUM GOVERNING PUBLIC CONDUCT DURING OFFICIAL MEETINGS, WHICH PROVIDES, IN PERTINENT PART, OFFICIALS SHALL BE RECOGNIZED BY THE CHAIR AND SHALL NOT INTERRUPT THE SPEAKER.

PUBLIC COMMENT SHALL BE ADDRESSED TO THE BOARD AS A WHOLE AND NOT TO ANY INDIVIDUAL ON THE DAIS, OR IN THE AUDIENCE. DISPLAYS OF ANGER, RUDENESS, RIDICULE, IMPATIENCE, LACK OF RESPECT OR PERSONAL ATTACKS ARE STRICTLY PROHIBITED.

UNAUTHORIZED REMARKS FROM THE AUDIENCE, STAMPING OF FEET, CLAPPING, WHISTLES, YELLING, AND SIMILAR DEMONSTRATIONS SHALL NOT BE PERMITTED. OFFENDERS MAY BE REMOVED FROM THE MEETING.

PLEASE MUTE, TURN OFF YOUR CELLPHONES, AND PLEASE GOVERN YOURSELVES ACCORDINGLY.

Thank You.

District Clerk Hall: Mr. Chair, the first public speakers are Margaret Shepherd, followed by Cindy March, and then Scott Lewis.

Ms. M. Shepherd: Margaret Shpherd, Riviera Beach.

Can I get a clarity to public comments, we can talk about anything? Is that correct? Okay.

This past week during election, I'm grateful that I was working on the team with [stammer] Deandre Poole. And, the question keep coming up and I think I wanna answer it. Why don't people come out and vote? Well, they don't come and vote, I said, because of this over here.

You know, thi'.., this is something that we as people, we.., we.., we.., We the People, have to stop. Our friendship, I have no friendship from this day on. I have made sure that every time someone run, they come and see me, I don't enlist nobody help but I make sure that when I'm talking to people, and I was not able to really get out and do a foot call but I started making calls and I started telling Deandre [inaudible]...

And then, I wanna say a few more things. But until we get it right. I don't care who you vote for. My thing is, why don't they get out? You got these two over here, everything is no, no, no.

And it's tragic that the public see you and the public has no respect for you. And, I hope twelve years, I think, and six years, it's just traumatic to sit here and be a part of not doing the business of the City.

As far as the water, the two main breaks I think, someone said you don't have to boil the water. I wanna go tell you that when I went to some of these people house, they didn't even have water in the house and they were drinking from the fountain.

So, I had my girls to take water to the senior citizens, while you all are up in Denver, spending $80,000, being the clowns that you are, saying this is the best City, or this a City up under... See, I don't know what you're talking about.

But, the one thing I want the public to know, they're spending money and you are suffering. The water is not, to me, I'm not trying to be funny, Josh, it's just not safe to drink. And, we have to get this…

They promised. They went on their.., their.., their campaign, clean water. Twelve years, six years. And, you know what get me, when Mr. Evans was here, all these questions, they didn't ask Mr. Evans all those questions.

I think everything was preplanned. So, when they got there, they didn't antagonize you with all these questions, but all of a sudden, everything got to dot the 'i', hit the 't'. Clean water. That's what the citizens of Riviera Beach need.

As I was out in the public, I encouraged them.., I encouraged them. I wouldn't care if your mother' running, your father running, go to the polls and vote. This is tragic because nobody want to even engage with some of you all.

If I had to vote again, Mr.., Mr. Guyton, you're the top of my list. Cedrick Thomas, the top of my list. The rest, Mr. Spiritis, the rest of you can go.

Chairperson Spiritis: Thank you for your comment, Ms. Shepherd.

District Clerk Hall: The next speaker is Cindy March, followed by Scott Lewis, and Edwin Ferguson.

Ms. C. March: Good evening, Council.

This water should be our number one priority. We shouldn't be up here bickering with one another about the water and pointing fingers at one certain individual.

Mr. Josh, I had an employees.., a lot of employees call me. I don't mean it directly to you but I just want you all to know, a lot of the employees and the voters, they call me. One called me about a week and a half ago and said, I'm just checking up on you, Ms. March. I said, well…

I went to another subject. I said, well, how's the water plant going? Is there anything we need to know? They gave you a compliment, Mr. Josh. Keep your head up.

We might not want certain people in leadership but we got to deal with it. You all sit up here, you all elaborate on Bill's age. You had a young man up in here. What happened? We don't have a water plant.

Now, it's costing us four.., over $400 million. But, if you hadda listened to Dr. Spiritis years ago, when he first tried to run, we wouldn't be in this predicament. You all hid about the E-coli, you said E-coli wasn't in the water. Mr. Evans said that he didn't know nothing about the fine.

How you not know about the fine and you got a Finance Director, when he write the check, you got to sign the check. So, you had to know about it. Guyton, you keep doing what you're doing.

No, I didn't support you but I stand for what's right and you've been right. They have not asked Mr. Evans all these hypothetical, easy questions that they need to answer. This City is not ran by two people.

We have to move this City forward, like you all kept on saying when Evans was here. We must move this City forward. And the only way we're gonna move it forward, we're gonna have to get along.

We're gonna disagree sometimes, we're gonna agree sometimes, but you all cannot keep elaborating on the old stuff of business that you all want. Ya'll never asked Mr. Evans about a $600,000 generator that he signed his name on.

I asked for the public records. I got the paper. Mr. Evans signed it. He didn't come to the Board and ask for permission. Now, ya'll wanna question everything. Lanier should be the last person to question anything.

How much money she spent on her credit card? How much money you spent All American? What's All American? You know, KaShamba, you oughta be ashamed of yourself. Really, it's timeout. It's time for a change and the only way we're gonna change, if we go to that ballot box, and know who you're voting for.

Don't let me tell you who to vote for, vote your heart and your conscious to move this City forward and make this City what we want it to be.

And please, can you all get some water out to our senior citizens? That's the least you all can do. I'd greatly appreciate it.

Chairperson Spiritis: Thank you for your comments?

Board Member Miller-Anderson: Chair?

Chairperson Spiritis: Yes.

Board Member Miller-Anderson: I, you know…

Chairperson Spiritis: Commissioner Miller-Anderson.

Board Member Miller-Anderson: It doesn't really bother me what people saying what they say but I thought we said we weren't calling out individual names.

[Inaudible audience comment]

Chairperson Spiritis: Yes.

You're.., you're correct.

Board Member Miller-Anderson: Right.

Chairperson Spiritis: Please.., please do not…

Board Member Miller-Anderson: [Chuckle].

Chairperson Spiritis: …mention anybody's…

Board Member Miller-Anderson: I mean, if we're gonna…

Chairperson Spiritis: …names directly to…

Board Member Miller-Anderson: …say it, just…

Chairperson Spiritis: …any of the Board.

Board Member Miller-Anderson: …make sure you follow up on it.

But, you know, I.., it doesn't matter to me though, what she's saying.

Chairperson Spiritis: Right.

Thank you.

District Clerk Hall: Mr. Chair, the next speaker is Scott Lewis, followed by Edwin Ferguson and Charisse Brown Scott.

Ms. S. Lewis: Scott Lewis.

I'm on the Audit Committee and today I met with the Internal Auditor and we were talking about water and about other things. And, I heard a comment earlier about, tell me some ideas.

Well, I got a couple that I asked her about and I'd like ya'll to be researching this. I don't know what the Port pays for water but they gotta be the biggest water user in this entire City. They have to be.

When that ship fills up with water before it goes to the Bahamas every other day, I guarantee they're a major water user. FP&L, major water user. Are we charging them full boat for all the water they're using from the City? Alright?

The second thing I'm wondering about is, I see on the.., on the budget, and I might not be right but I think you got a $54 million budget that you're talking about. And, I see a million four for staffing.

Then, I see $8.5 million back to the City Administration. Well, you take eight point five and one point four, you're at $10 million, and that hasn't put all of the other administrative cost are in this budget.

You're over twenty percent Administration. What are you doing? Reduce the Administration. And, the biggest, fattest pig there is the City. [Stammer] $8.5 million next year. Don't approve that. Don't do it.

Make some tough decisions that I hear you all talking about but I don't see you doing it. Do it. Stand down on this.

You know, another one that bothers me, I see the water meters. To me, all these new projects, the sixteen new projects you're approving, I sure hope.., because there is no water impact fee that I can find. The county doesn't have one.

Every one of those new units, if they aren't paying a hundred percent share of the cost of this $500 million plant, that's unfair to every resident in the City that you represent today. I do not need to pay for a hundred people that are gonna move next door and pay a portion of their capital expense for a water plant.

They need to pay a hundred percent. Every Resident here should not be penalized for paying high water rates that are subsidizing new development. Not a penny to subsidize new development.

I know that it helps campaign funds but I care about us paying property taxes and paying water bills, and they're getting outta hand. My electric bill is not as high as my water bill that comes in.

Now, what's wrong with that picture? Get control of the budget, please. Do some deep digging and make some hard decisions. Thank you.

Chairperson Spiritis: Thank you for your comment.

Privilege of the Chair. I just wanna mention that this Board did approve close to a $10,000 hookup fee for water per unit. So, that's gonna [stammer] help us substantially with the new water plant.

Thank you.

District Clerk Hall: Mr. Chair, the next speaker is Edwin Ferguson, followed by Charisse Brown Scott and Cathy Curry.

Chairperson Spiritis: Welcome.

School Board Member Ferguson: Good evening. School Board Member Edwin Ferguson. Mayor, City Council.

I'll be.., I'll be brief. I just wanted to invite the City out to my first town hall for this year, Town Hall 27. It's gonna be next Thursday, on September 3rd here in the Marina. It's cosponsored by Mayor Lawson. Mayor Lawson, thank you for your support. I think this is our third, if you would, co-town hall.

I'm just gonna give you all an update on how the schools are performing throughout District 7 which, you all know, I think most of you know, runs from Riviera Beach down into Delray, talking about some of the capital projects that we have.

On the books right now, I think we're about.., I think we're at a quarter billion, just in Riviera Beach alone, and that definitely is through my advocacy.

So, thumbs up for Riviera Beach in that regard, but there's some.., there's some other projects as well that we have going on throughout the District 7 that I wanna advise you of because they directly relate to the overall experience of our residents here in Riviera Beach, and throughout Palm Beach County.

If you can't make it to that town hall, I'll have a follow up state of District 7 town hall down in Delray on September 15th. It'll be at the Delray Full Service Adult Education Center, which is formerly known as Historic Carver High School, which is at 301 Southwest 14th Avenue. That'll be at 6:00 p.m. as well.

All the town halls are always at.., at 6:00 p.m. And again, that'll be on Tuesday, September 15th.

Then, I'll have a symposium back here in Riviera Beach regarding the 2026 referendum renewal and Amendment 3. That's the possible change to our const'.., in regard to the $250,000 [sigh] homestead exemption.

And so, everybody, I'm sure many of you definitely know about the pros and cons to that but I know a lot of residents who are gonna have to vote aren't necessarily aware of that so I wanna bring that to their attention as well. So, that town hall will be on Tuesday, September 22nd, also at 6:00 p.m.

Then, I'll have an update on the construction on the African American Museum and Research Library. That'll take place on Tuesday, October 13th at 6:00 p.m. So, I'll be following up with you all as.., as that nears as well. That's a $30 million project that I helped advocate for in West Palm Beach.

And then, we'll be back here on October 17th.., Tuesday, Oct'.., I'm sorry, October 27th at 6:00 p.m. That's also one town hall, that'll be town hall 31 that I'm doing in co-sponsorship with Mayor Lawson as well just to update you all on where things stand with the Riviera Beach High School which most of you know.., well hopefully know, will open in August of 2030.

And again, right now, we have that budgeted at about $195 million. Initially, it was one fifty-five, now it's up to one ninety-five.

So, a lot of things are happening for the be'.., for the better here in District 7 and I wanna make sure that as many residents here in Rivera Beach, and throughout Palm Beach County, are made abreast of that, so that's why I'm doing what I'm doing.

So, I look forward to seeing you all at future events.

Ya'll have a good night.

Mayor Lawson: Mr. Chair?

Board Member Guyton: Mr. Ferguson?

I'm sorry. Mr. Chair?

Chairperson Spiritis: Commissioner Gutyon.

Board Member Guyton: Yes.

We have… First of all, thank you for what you do for District 7. You're doing a great job.

We have presentations by elected officials that represent us. We allow them to come in and have a PowerPoint presentation. You don't have to come in and do the three minutes. If you'd like to come…

School Board Member Ferguson: Yes, sir.

Board Member Guyton: …[stammer].

School Board Member Ferguson: I'll.., I'll be back.

I was just giving everybody a heads up because we have the town hall next week. But yeah. I'm.., I'm scheduled to appear before you all. I'm not sure if it's.., I think it's this month but it may be early next month.

[Inaudible audience comment]

School Board Member Ferguson: But, I'll be back…

Board Member Guyton: Okay.

School Board Member Ferguson: …City Council Guyton, to talk to you all about how the Riviera Beach schools are performing which I have a lot of good news in that regard.

So, I'll definitely have my presentations for you and everybody else.

[Inaudible].

Board Member Guyton: Thank you, Mr.., Mr…

Mayor Lawson: Mr. Chair?

Chairperson Spiritis: Yeah.

Mayor.

Mayor Lawson: Thank you.

And, thank you again, School Board Member, you're doing a phenomenal job just in your short period of time.

With the same, in line with Commissioner Guyton, 'cause I wanna get you back to actually talk about some of the concerns that have been coming across the Board. And, one of the questions I wanna.., I was gonna [inauidble] in the next weeks, but I know there was a reduc'.., a reduction of about 7,000 students across the county, could that impact some of the capital projects that they're bringing to Riviera Beach? And, how do we fight against that?

School Board Member Ferguson: Different side of the house so, no.

Mayor Lawson: Perfect.

Thank you so much.

School Board Member Ferguson: Different side of the house.

Mayor Lawson: And then, we'll add that to the Agenda, hopefully, whenever the Chair does bring that back for the Board. Hopefully, sometime in September, and then, make sure everybody comes out for the town hall we're cohosting.

School Board Member Ferguson: Yeah.

We are already scheduled. I just didn't take time cause I thought I was gonna [inaudible]...

Mayor Lawson: Perfect.

Thank you, sir.

School Board Member Ferguson: I'll be back.

Mayor Lawson: So, we'll see you on the Agenda in.., well, I'll see you at the town hall.

School Board Member Ferguson: Okay.

Mayor Lawson: Thank you.

School Board Member Ferguson: Alright.

Ya'll have a good night.

Chairperson Spiritis: Commissioner…

School Board Member Ferguson: Oh, sorry.

Chairperson Spiritis: …Davis Panier.

Vice Chair Davis Panier: Hello Mr. Ferguson, and thanks for all that you do. I wanna say thank you on behalf of Riviera Beach Prep, as we are one of the schools that are slated to have an expansion.

School Board Member Ferguson: Mm.

Vice Chair Davis Panier: I have to say this, we are a little disheartened about our gymnasium but if you would look into that a little bit and see if there's anything that you all can consider for our students…

School Board Member Ferguson: Okay.

Vice Chair Davis Panier: …at Riviera Beach Prep.

And, I believe my Principal may have sent you an email.

So.., and.., and if... I don't mind having a conversation with you as well.

School Board Member Ferguson: I don't think I saw it.

But, if you wanna resend it.

Vice Chair Davis Panier: Okay.

School Board Member Ferguson: I may have overlooked it but I don't think Principal Simmons sent that to me. But…

Vice Chair Davis Panier: Oh.

School Board Member Ferguson: …you know I'm always here for Riviera Beach Prep so…

Vice Chair Davis Panier: I appreciate…

School Board Member Ferguson: …just let me know.

Vice Chair Davis Panier: …you. Alright.

Thank you.

School Board Member Ferguson: No problem.

Chairperson Spiritis: Mr. Ferguson, I want to…

School Board Member Ferguson: Yes, sir.

Chairperson Spiritis: …reiterate what my colleague said.

We wanna thank you for everything you do for our City.

School Board Member Ferguson: Yes, sir.

Chairperson Spiritis: We're all looking forward to the new high school and thank you.

Keep it up.., keep up the good work.

Thank you.

School Board Member Ferguson: Thank.., thank you.

I appreciate it.

Thank you. I'll see ya'll later.

And congratulations again on the All American City nomination.

Board Member Miller-Anderson: Thank you.

School Board Member Ferguson: Councilwoman Miller. Ya'll take care.

Chairperson Spiritis: Thank you.

District Clerk Hall: Mr. Chair, the next speaker is Charisse Brown Scott, followed by Cathy Curry and Doretta Paulk.

[Pause]

District Clerk Hall: Charrisse Brown Scott?

Ms. C. Brown Scott: Good evening, everybody.

First, I wanna say, I want to thank the Mayor for embracing me coming into Riviera. Myself and my son, we came here a year ago. Although I had this property in Riviera for a while, we recently came to move.

So, I had to write down some things so I could just peruse it. So, the [stammer].., the essential concern that I have is not merely the cost of the water that's going up in Riviera Beach. Of course, it's increasing a lot and I definitely seen that over the past four years. Right?

But, one of my main concerns is the quality of water and where the money for the increases are going. Right? I feel like being a homeowner, I had to come out with a lot of money out of pocket just for filtration for my sink. Like, I'm.., filtration for my showers, washing my food, the pipes that has corroded.

I didn't know anything. Me coming from Nassau County in New York, they had to, like, revamp the whole thing in Nassau County. We have, like.., they had really good water. And so, coming down here, I was just thinking, like, okay, well water, we're by the ocean, maybe it'll be better.

But, it really costs me more because now, I guess, the iron in my pipes eroded. I had to get a plumber to do that, I had to buy filtration systems. So yeah, of course, we're paying more money but I just wanna know, what are we getting for paying more money every single month?

Is it the pay more money and wait and see? Because, I see that the.., these buildings that are coming up, they're using all these waters. All of these industrial places are using all of these waters.

The residents, I went to a group home, I went to a nursing home, and it's ridiculous that the water, you can smell it and you can see it. It's obvious.

I had a water test done on my house, twice. One from the county and they never gave me the [stammer] results from it. And then, one independently and you don't even wanna know what that looks like.

My thing is, forget now. I have a son that's here, and the quality of the water that he's even bathing with or getting in his eyes or whatever, how is that gonna affect him down the road?

Everybody here may have health issues but it's gonna be exacerbated because of just regular water that people are using to wash dishes, to wash their fruit, to, like, you can't use filtered water for everything.

I buy bottled water in my house. That costs me a lot of money. So, my water bill is costing me money, I get it but what have we benefited from it as the residents here?

That's my only question. That's my only concern to the Board.

Chairperson Spiritis: Thank you for your comment.

I just wanna note that I am from Nassau County as well, and I can tell you that we have plenty of problems with our water up in Nassau County. We have oil plumes, we have cancers, you know, issues in.., in many of the areas in the county.

So, every community has to deal with the issues with water and I thank our Staff for doing what they're doing.

But, thank you for your comments.

Board Member Guyton: Absolutely.

And.., and let me just add to, if I may, very quickly. Very quickly, ma'am. Riviera Beach had a Citywide, underground infrastructure program, put in all new pipes, on the public sector in every district the last time I was here.

No community, that I know, have.., of, have ever done that. They normally replace the pipes if they got a pothole or something. We did most of the pipes in our City. Now, there.., there is a.., a pipe that runs from the public pipes to your home too.

But, a lot of those public pipes have been replaced in Riviera Beach. I sat on this dais when.., when it happened. We.., we…

[Inaudible audience comment]

Board Member Guyton: I know.

But, we still have a lot of work to do. I'm not saying that we don't have work to do but I don't wanna give the impression that we have.., have not replaced these pipes in fifty or sixty years.

That's not the case. We replaced a lotta of them in the last ten years. But, there are pipes that run to the home too, that homeowners need to understand, has an impact on the water that goes into their home.

So, we.., we just wanna give accurate information out there. The City is doing a lot to try to do better, and we have to do better.

Thank you.

Chairperson Spiritis: Thank you, Commissioner Guyton.

District Clerk Hall: Mr. Chair, the next speaker is Cathy Curry, followed by Doretta Paulk and Delores Williams.

Ms. C. Curry: Good afternoon.

I'm here this evening to speak on the water bill. Yes, the water of the City.., City of Riviera Beach once again.

[Inaudible comment]

Ms. C. Curry: Our water has gone up a hundred and thirty percent.

Our water bill is being charged, to my knowledge, fraudulently, because I don't know when was this voted on? When was this passed? Did you put it out to the patrons of Riviera Beach?

If we use eight hundred gallons of water, you are charging us for a thousand. You're rounding up. So, that is two hundred gallons that we're not using, that you're charging us for. My water bill, and I have checked it for the past year, and watched it, is over a hundred dollars. That is ridiculous.

Not to mention that, why am I paying a extra two hundred.., for a extra two hundred gallons of water that I'm not using it? That's twenty-four hundred gallons that you are charging me for just in water. Twenty-four hundred gallons, also that you're charging me for in runoff water.

Runoff water is what God puts and it runs off your.., your grass, your ground, down into the sewer. We actually don't have anything to do with that. We can't stop that. But, my water bill is high.

You're charging me, for three months in a row, check your water bills, a hundred and seventeen, a hundred and seventeen, a hundred and seventeen. Then, you'll take a gap and you'll do eighty-nine or you'll do one twenty-five.

Then, you'll go back and charge another three months in a row one twenty-five, one twenty-five, one twenty-five. I am not using a thousand gallons of water. When was this put in place that you guys were up charging us on the water?

No one ever told me. That is fraudulent. I don't use a thousand gallons. So, if we use less than five hundred, are you not gonna charge us for that or are you just gonna stay at five hundred?

I thought the new meters were put there so that you can read them. If that's the case, you wasted money, if you're gonna round it up. You wasted the citizen's money putting the meters there, you're not reading them, you're just rounding it up to a thousand.

So, if you go to fifteen hundred, then you're charging that person for two thousand gallons of water. I.., I don't have that kinda money to give away, to waste, to throw away. And, the water bill is consistently going up a hundred and thirty percent.

And, I'm here to speak tonight because I went to the City water plant to get questions. They didn't answer me, they just stood there. They just looked at me as if I had nothing to say or I wasn't speaking about anything that concerned them.

They have yet to come out to read my meter. They have yet to call me back and get with me. They have yet to even speak to me in person. What is going on with our water bill? That's not fair. That's fraudulent. Nobody ever told us that.

And, I want you to know that I went all the way back to 2022, that has been going on since 2022.

Now, unbeknownst to me, I spoke with someone and they said that they were up charging us on the water bill to pay for the Port.

Chairperson Spiritis: Thank you for your…

Ms. C. Curry: That was…

Chairperson Spiritis: …comment.

Ms. C. Curry: …an agreement that…

Chairperson Spiritis: Thank you…

Ms. C. Curry: …you all…

Chairperson Spiritis: …for your comment.

Ms. C. Curry: …put out there…

Chairperson Spiritis: Thank you…

Ms. C. Curry: …and put together.

That is fraud.

Chairperson Spiritis: …so much.

Thank you for your comment.

Board Member Guyton: Okay.

Mr. Chair?

Chairperson Spiritis: Yes.

Commissioner Guyton.

Board Member Guyton: Mr. Sherman…

Is Mr. Sherman over there?

[Inaudible comment]

Chairperson Spiritis: While we're waiting for Mr. Sherman to come up, I do believe, director, we have a minimum charge on water?

So, whether they use less, they get charged the minimum price, correct?

Board Member Guyton: Well, I'm about to ask Mr. Sherman that.

Chairperson Spiritis: Okay.

Board Member Guyton: Do we round up on a water bill?

District Finance Director Sherman: No.

We do not round up. So, if you.., let's just say you start at zero, you use eight hundred gallons, you get charged zero. The next month, when you use another eight hundred, you've now turned the meter at that thousand 'cause now you've used sixteen hundred, you get charged for that thousand. Then, you get charged…

You know, so [stammer].., it's only every time you hit that thousand mark.

Board Member Guyton: So, there's no rounding up?

District Finance Director Sherman: There's no rounding up.

There is…

Board Member Guyton: Okay.

District Finance Director Sherman: There is the base fee though.

Board Member Guyton: Please sit down, ma'am.

District Finance Director Sherman: Yeah.

Board Member Guyton: Ma'.., ma'am, [stammer] we…

Chairperson Spiritis: We're not going to have a…

Board Member Guyton: No.

Chairperson Spiritis: …debate…

Board Member Guyton: We.., we don't…

Chairperson Spiritis: …back and forth.

Thank you.

Board Member Guyton: …do that here.

Chairperson Spiritis: We're trying to answer…

Board Member Guyton: Wait.

Chairperson Spiritis: …your question.

Board Member Guyton: Yeah.

I.., I just want… I like the accurate information to get out ‘cause this is an emotional issue and if there’s something being said accurate that we need to correct, I wanna know about it. I didn’t know if we rounded up or not, to be honest.

I.., I didn’t think we did.

District Finance Director Sherman: We do not.

Board Member Guyton: But I didn’t know.

So, we do not?

District Finance Director Sherman: We do not.

Board Member Guyton: We do not round up.

The young lady said that no one has ever gotten back to her. Would somebody from the Utility District or from your office…

District Finance Director Sherman: I’ll.., I’ll get [inaudible]...

Board Member Guyton: …please…

District Finance Director Sherman: …information.

Board Member Guyton: …get with her and explain how our water bill is calculated so that she can have…

District Finance Director Sherman: Yes.

Board Member Guyton: …some accurate information?

Vice Chair Davis Panier: Chair?

Board Member Guyton: Thank you.

Vice Chair Davis Panier: Chair?

Chairperson Spiritis: Yes.

Board Member Guyton: Yeah.

Vice Chair Davis Panier: Can you speak on the base?

On the base amount?

District Finance Director Sherman: Right.

Vice Chair Davis Panier: Monthly?

'Cause, I think that's another charge…

District Finance Director Sherman: I don't have it with me.

I'm trying to think if I have anything in my bag.

Chairperson Spiritis: But, that's basically…

District Finance Director Sherman: I.., I don't…

Chairperson Spiritis: …a minimum fee no matter what, right?

District Finance Director Sherman: But, but… Yeah.

There.., there's a.., there's a base fee that pays, in essence, for all the fixed costs. And, I'm trying to think. [Whispering to self]… Combine water and sewer, it's about fifty dollars a month for that base.

And then, you're getting charged again for every thousand [inaudible].

Chairperson Spiritis: Okay.

District Finance Director Sherman: And again, you see, you get charged for a thousand.

When the meter turns to that thousand, you get charged for a thousand gallons of water. And then, you also get charged for a thousand gallons of wastewater that go with it. And then, the wastewater is capped for residential at ten thousand.

Board Member Guyton: Okay.

Thank you.

Chairperson Spiritis: Okay.

Commissioner…

Board Member Guyton: Thank you…

Chairperson Spiritis: …are you finished?

Board Member Guyton: …Mr. Chair.

And, please get with the…

District Finance Director Sherman: I will…

Board Member Guyton: ...young lady to…

District Finance Director Sherman: …get their information and contact.

Yes.

Board Member Guyton: Okay.

Thank you.

Chairperson Spiritis: Okay.

Clerk.

District Clerk Hall: Mr. Chair, the next speaker is Doretta Paulk, followed by Delores Williams.

Ms. D. Paulk: Good evening. My name is Doretta Paulk.

And, I just went to, yesterday, [stammer] a absolutely awesome forum. It was titled scam awareness and artificial intelligence. It was hosted by the Faith Deliverance Church. And, I wanna commend a couple of your officers that were there, Officer Hunter. And then, it was a Dr. Marshall.

And, they did an excellent job. And, they had also a.., an insurance agent there which gave us [stammer] totally a lotta information. And also, your officers too, about senior scams.

And, this was very enlightening. I know we do a lot of.., having a lot of people, authors and everything, come to the City Library under Mr. Brody, and hopefully, these officers can come there too.

It was very wonderful, wonderful forum. And, I learned a lot. And, when we were there, we actually.., a phone [stammer]… The.., one of the.., the mother of the church, her phone rang and it was a scam.

We were listening to it. And, they said, see, this is how it happens.

But, I wanna talk also about a serious situation that's happening at my home. I live 211 West 20th Street in Riviera. Several months ago, I had a.., they were putting in a pipe on G and 20th.

And.., which has always burst, every six months it seems like. But then, while they were putting down this pipe, was, like, you can hear this [umph sound] under my feet.., the vibration, I called Mr. Josh Niemann to my home several months ago, and I called.., Mr. Gallant came out.

And then, the next day, Mr. Niemann came out. I never heard back from them what.., what.., what the problem [stammer]… Although, Mr. Niemann said to me outside, we were like, this much apart and he said, Ms. Paulk, we're gonna use a different type of machine to further put this pipe in and the vibration would not be as severe.

Did you not tell me that? Okay.

Then, I noticed, when I was [stammer] talking.., when I.., before calling him, I had.., I had cracks. I have asphalt. I had cracks but not as severe as this.., after this. And, I brought it to both of your attention.

I didn't hear from you. So then, that's when I went to HR. HR said that your [stammer] report is saying that none of the neighbors.., and quote, our team reviewed the product.., the

details and found no other damage complaints caused vibrations, from any other residents along the [inaudible].

Chairperson Spiritis: Thank you.

Ms. D. Paulk: And that is not true.

And, you know that's not true.

Chairperson Spiritis: Thank you so much, Ms. Paulk.

Thank you.

Ms. D. Paulk: You know that's not…

Chairperson Spiritis: Thank you…

Ms. D. Paulk: …true.

Chairperson Spiritis: …for your comment.

Thank you.

Ms. D. Paulk: So, I want, you know, follow up about this.

Chairperson Spiritis: Thank you.

Thank you for your comment.

Ms. D. Paulk: Well, you need to be truthful.

Chairperson Spiritis: Clerk, next, please.

District Clerk Hall: The next speak…

Ms. D. Paulk: No problem.

District Clerk Hall: …is Delores Williams.

Ms. D. Paulk: Be truthful.

Ms. D. Williams: That's my friend, Shorty.

[Chuckles]

Ms. D. Williams: [Chuckle].

I do.., like to thank everyone for being here tonight, and all the people that's watching.

I have.., I have problems with the water, Mr. Josh. You're in the okra tonight, boy. [Chuckle].

But, I'd just like to say, I appreciate everything everybody said about the water. You have to remember, all this stuff was going on for the past five to six years, five or six years, maybe more.

And, I think what they were talking about the money, [inaudible] the money. Then, they say something like some machine, sixty six hundred some thousand dollars or something.., to fix something.

They didn't wanna pass it but they finally had to pass it. That was not on the.., Mr. Wilkins or nobody that was…

This.., this was pass stuff. So, we don't.., if you don't learn from your past to direct your future, you're gonna keep on backing up like the doodle bug. You.., you.., you be in the ground and you see this little thing that got all of the holes in that doodle bug. He just back right on up and go down in that hole.

Do [inaudible] about with nothing, just backing up, backing up, backing up. So, if you say you wanna do those things that makes for peace for the City, I don't think you.., that is going forward.

Everybody you get you wanna pick your people and you wanna make sure they do this and do that. Go back and look at all the records, all the monies and stuff. Ya'll have voted on and passed it.

Before Mr. Josh got here. Or, the new Councils got here. Remember that now. All this stuff they're talking about and trying to bring up. This was before they was on there.

So, what you got to do is try to clean it up. [Inaudible] sweep up, but I messed up and start my life all over [chuckle] again. You gotta just keep on doing the right thing. Let us not be yes a yes and a no, but let us try to be the no and the yes to take the City forward. And do those things.

Mr. Evans, he did what he could do while he was here. So, go forward. I think Mr. Evans is working in Fort Lauderdale. Well, I'mma say this and maybe I might be outta order but if you feel like that things are not being done, I don't see none of you transferring down there to Fort Lauderdale [inaudible] Mr. Evans.

So, we just wanna do those things that are edified for this City, the place to work, play, and live.

I don't think so. I.., I have a lot of problems. I know about the water. I go talk to them and try to get it straight. It's a high bill I got too. But, I'm not coming up here to help them put you down that much more.

What we need to do, you voted on him. What, we got to do all those things.., all the.., keeping up with all the money. Some of ya'll not [inaudible]...

Chairperson Spiritis: Thank you for your comments.

Ms. D. Williams: ...since ya'll are passed in the back.

Chairperson Spiritis: Thank you.

District Clerk Hall: Mr. Chair, that's the last public speaker.

Chairperson Spiritis: Okay.

7b. <u>ITEM NO. 7B</u>

District Clerk Hall: Mr. Chair, we are now on Item 7b.

District Clerk Hall: **RESOLUTION NUMBER 37-26UD: A RESOLUTION OF THE BOARD OF DIRECTORS OF THE CITY OF RIVIERA BEACH UTILITY SPECIAL DISTRICT, PALM BEACH COUNTY, FLORIDA, RETROACTIVELY APPROVING THE REPAIR OF A TWO WASTEWATER COLLECTIONS FORCE MAIN ONE ON BLUE HERON AND GARDENS AND THE OTHER BY THE HINTERLAND GROUP, IN ACCORDANCE TO LOXAHATCHEE RIVER ENVIRONMENTAL CONTROL DISTRICT GENERAL CONSTRUCTION SERVICES AND EMERGENCY/ON-CALL REPAIR SERVICES IN AN AMOUNT NOT TO EXCEED $305,767.47 FROM PROJECT CODE 23035, EMERGENCY REPAIR; AND AUTHORIZING THE UTILITY SPECIAL DISTRICT FINANCE DIRECTOR TO MAKE PAYMENTS FROM PROJECT CODE 23035 IN AN AMOUNT NOT TO EXCEED $305,767.47; AND PROVIDING AN EFFECTIVE DATE.**

JOSHUA NIEMANN, UTILITY SPECIAL DISTRICT EXECUTIVE DIRECTOR, (561) 845-4185

District Clerk Hall: Mr. Chair, there are no comment cards on this Item.

The acceptance of comment cards is now closed.

Board Member Guyton: So moved.

Chairperson Spiritis: Is there a motion?

Okay. Thank you, Commissioner Guyton, making a motion.

Vice Chair Davis Panier: Second.

Chairperson Spiritis: Seconded by Commissioner Davis Panier.

Executive Director Niemann: Mr. Chair, if I may?

Chairperson Spiritis: Director.

Executive Director Niemann: As noted in the title, this is for the repair of the two force main breaks that occurred over the past month and a half.

One was located on Blue Heron Boulevard and Gardens Road, and then, the other at MLK and Congress.

As we talked about certain.., during our.., some of our Agenda preps, when we have a force main break, those breaks not only require fixing at where the break occurred, but they also require additional attention at the lift stations that are turned off to be able to isolate that break, stop the flow, and make the repair.

And so, during, specifically, the Blue Heron and Gardens Road incident, we had around, I thi'.., I believe it was nine vacuum and pumper tucks, run.., driving in circles for approximately eight hours, pumping those lift stations and which is the reason.

The other reason that this price is so high is, specifically, on Blue Heron, the.., the MOT that was required to do that work by.., because a DOT road, was expensive especially being the emergency that it was

Chairperson Spiritis: Any.., any questions from the Board?

Board Member Lanier: Yeah.

Chairperson Spiritis: Yes.

Commissioner Lanier.

Board Member Lanier: Why are we being asked to approve this but you're actively.., I know that you said that they're…

When did these failures actually occur?

Executive Director Niemann: Within the last month.

Board Member Lanier: Within the last month?

So, there is no contingency for the City to pay for this type of…

Executive Director Niemann: Mr. Chair, if I may?

Chairperson Spiritis: Yes.

Director.

Executive Director Niemann: So, during one of my budgets over the.., one of our Agendas over the past year, I tried bringing an Agenda to the Council and it was not approved in May for $500,000 and you elected.., told me to bring these back on a case by case basis, after the work had been done to approve them.

Board Member Lanier: After the work had been done?

Executive Director Niemann: Yes, ma'am.

Board Member Lanier: I didn't agree to that.

Chairperson Spiritis: Yes.

I.., I remember that conversation.

Board Member Guyton: I remember that.

Board Member Lanier: So, you have a.., you have a piggyback contract which is, again, this is a lot of piggyback for a night.

I mean [stammer], and the USD does a lot of piggyback for.., for some reason. I don't know why.

So, were there other contractors who were contracted.., or, contacted for emergency pricing? Other than this Loxahatchee River Environmental Control District?

Executive Director Niemann: Madam.., or Mr. Chair, if I may?

Chairperson Spiritis: Yes.

Executive Director Niemann: So, it was actually the Hinterland Group, a local company that did the work.

The.., the Loxahatchee River District, that's just a contract that we used to piggyback these services.

During these two specific incidences, the Hinterland Group was the only one available at that time, especially for the large amount of deployment specifically related to the Blue Heron and Gardens Road.

Board Member Lanier: So…

Executive Director Niemann: We actually used… Excuse me.

But, we actually used additional vendors on top of them that are located in the City to help with that break.

Board Member Lanier: So, this.., this…

I didn't see anything… There wasn't.., there wasn't any backup for labor, materials, equipment markups. Was there any backup for that? I didn't see that.

Executive Director Niemann: Yes, ma'am.

It should be in the.., you see where the attachments for quick bills 24 and 20' dash two.., dash 0225, and then 24…

Board Member Lanier: Dash 20?

Executive Director Niemann: …dash 20.

Board Member Lanier: Okay.

Now, what was the cost of.., of this that happened before. This was.., you said this happened before, so what was the average cost of this?

Executive Director Niemann: So, no.

[Stammer] what I had stated was, there was two separate breaks that this is covering, one on Blue Heron and Gardens, and one on MLK and Congress. Those two force main breaks that were fixed by Hinterland need to be paid now.

Board Member Lanier: Okay.

So, I have a problem with retroactive payment for anything, regardless because, what that does is puts us in a position where we have to pay it now. So, anything that is retroactive, it.., I think that it could be taken care of before you get to us.

Chairperson Spiritis: Director, can you tell us how much time you had to make a…

Board Member Lanier: Can I…

Chairperson Spiritis: …decision…

Board Member Lanier: …finish?

Chairperson Spiritis: Privilege of the Chair.

Executive Director Niemann: Mr. Chair, because these are wastewater breaks, they have to be fixed immediately.

Chairperson Spiritis: Immediately, correct?

Executive Director Niemann: And.., and as I stated, in May, I did try to bring a contract to the Board to preapprove a dollar amount to have emergency funds available should an emergency occur.

Chairperson Spiritis: Right.

If you didn't make those repairs, you'd have another break that would cost us hundreds of thousands of dollars again to repair, correct?

Executive Director Niemann: Yes.

Chairperson Spiritis: Thank you.

Board Member Lanier: I.., I don't like…

Chairperson Spiritis: Commissioner…

Board Member Lanier: …how you…

Chairperson Spiritis: …Lanier.

Board Member Lanier: I don't like how you coach him.

I don't like that. I don't like how you go back after…

Chairperson Spiritis: Please.

I.., I'm allowed…

Board Member Lanier: [Stammer] I'm.., I'm…

Chairperson Spiritis: …to ask questions the same way …

Board Member Lanier: …finishing my…

Chairperson Spiritis: ….you are.

Board Member Lanier: Can I finish talking?

Chairperson Spiritis: Thank you.

Well, I didn't.., I didn't call on you yet.

Board Member Lanier: Can I finish talking?

Chairperson Spiritis: Yes.

You can now…

Board Member Lanier: Alright.

Chairperson Spiritis: Commissioner Lanier.

Board Member Lanier: Thank you.

So, yeah. You coach him. Every time I ask a question, you go behind me and say, oh well, what about if it was this or what about if it was that? I don't like that coaching that you're doing to this man.

Chairperson Spiritis: I'm not coaching.

Board Member Lanier: Because there.., there is…

Chairperson Spiritis: I have an expertise…

Board Member Lanier: Hold on.

Chairperson Spiritis: …that I'm bringing to…

Board Member Lanier: I…

Chairperson Spiritis: …the table.

Board Member Lanier: Can I finish? Can I finish?

I know what's happening and that is not the way Staff is supposed to answer questions, not with you coaching them. And I'm gonna say that and that's the way I feel about it.

Now, Mr. Niemann, in regards to the piggybacks that have happened on this.., on this Agenda tonight, there are, like, six different piggybacks. How.., I think that when we talked the last time, we talked about how you would work with Procurement to be able to try and bid some of this stuff out for the Utility District's.., for itself and not go through piggybacks every time we have a problem.

What is that.., what's happening with that in regards to Procurement?

Executive Director Niemann: Mr. Chair, if I may?

Chairperson Spiritis: Director.

Executive Director Niemann: We are working with Procurement and do plan on starting advertising more of these [stammer] projects and equipment in the next Fiscal Year.

The problem with a lot of the.., the equipment that we're purchasing right now, these are things that are breaking down that are critical to operations. And so, if we do our own solicitation, they take anywhere from sixty to ninety days to prepare and then another hundred and twenty days to ninety days to advertise.

And so, because we need them so quickly.., and.., and this is what I think was the Achilles Heel of some of the past administrations, when things would break, the procurement process is long and as it should be, there's checks and balances in there.

But, having to not use something that's already ready, that a [stammer].., a price has already been competitively bid by somebody else, that generally has a better price because it's an older, that hasn't been infected by inflation, puts us in a better situation.

But, I will be working with Procurement to bring more of these. I spoke to my Water Plant Manager today about [stammer] some of our chemicals for next Fiscal Year because we can advertise those ourselves and be able to potentially get better prices.

Board Member Lanier: Yeah.

Because, there's a lot of, as I said before, a lot of piggybacks. But, also too, this retro activeness is something that we have to.., we have to slow down with because we're coming here and we are paying bills that have already been…

You know, this is, what, $300,000, the other one was $600,000. That's a million dollars already that has already been spent. And, we need to be able to come back and approve these before it's actually being spent. Because it's happening too much.

And, I understand the state of the water plant. I know it's.., it's.., we're getting a new one because of it and I understand that. But, at least, when you're doing these piggybacks, at least get three bids, at least get something where there is some type of way in which you are looking at other vendors for this work.

Thank you.

Chairperson Spiritis: Finished, Commissioner Lanier?

Board Member Lanier: I'm.., I'm done.

Chairperson Spiritis: Okay.

Any other questions from the Board?

[Pause]

Chairperson Spiritis: Clerk.

District Clerk Hall: Vice Chair Davis Panier?

Vice Chair Davis Panier: Yes.

District Clerk Hall: Board Member Guyton?

Board Member Guyton: Yes.

District Clerk Hall: Board Member Lanier?

Board Member Lanier: No.

District Clerk Hall: Board Member Miller-Anderson?

Board Member Miller-Anderson: No.

District Clerk Hall: Chairperson Dr. Spiritis?

Chairperson Spiritis: Yes.

District Clerk Hall: The Item passes with Board Members Lanier and Miller-Anderson dissenting.

7c. <u>ITEM NO. 7C</u>

District Clerk Hall: Mr. Chair, we are on Item 7c.

District Clerk Hall: RESOLUTION NUMBER 39-26UD: A RESOLUTION OF THE BOARD OF DIRECTORS OF THE CITY OF RIVIERA BEACH UTILITY SPECIAL DISTRICT, PALM BEACH COUNTY, FLORIDA, UTILIZING THE PREVIOUSLY ADOPTED PIGGYBACK AGREEMENT WITH MURPHY PIPELINE CONTRACTORS USING THE CITY OF CLEARWATER AND APPROVAL OF A PURCHASE ORDER IN THE AMOUNT OF $993,612.15 TO MURPHY PIPELINE CONTRACTORS FROM ACCOUNT NUMBER 41131104-563000, REPAIRS AND MAINTENANCE ACCOUNT; AND AUTHORIZING THE UTILITY SPECIAL DISTRICT FINANCE DIRECTOR TO MAKE PAYMENTS FROM ACCOUNT

NUMBER 41131104-563000 IN AN AMOUNT NOT TO EXCEED $993,612.15; AND PROVIDING AN EFFECTIVE DATE.

JOSHUA NIEMANN, UTILITY SPECIAL DISTRICT EXECUTIVE DIRECTOR, (561) 845-4053

District Clerk Hall: Mr. Chair, there are no comment cards on this Item.

The acceptance of cards is closed.

Board Member Guyton: So moved.

Chairperson Spiritis: Moved by Commissioner Guyton.

Vice Chair Davis Panier: Second.

Chairperson Spiritis: Seconded by Commissioner Davis Panier.

Director.

Executive Director Niemann: Mr. Chair, if I will, I have Mr. Gallant, the Assistant Director go over this Item with you.

Assistant Director Gallant: Mr. Chair, if I may?

This Item before you is a previously adopted piggyback. This is the fourth and final phase for Fiscal Year 2026 and part of our force main replacement project. So far, the contractor has com'.., has done the section from Lift Station 1A to 22nd & G.

They've done the section at Lift Station 32, which is off of 15th Street.

They're currently doing the section on Lift Station 8, which is off West 30th Street.

And, this parcel.., this piece here is the section from 22nd & Avenue G to 22nd & Broadway. So, this is the fourth and final segment of our planned work for Fiscal Year 2026. Next year, we'll have other work that will replace the force main, all the way to the intracoastal waterway in preparation of the new crossing so we can remediate the.., the line and have a backup for the lift stations in that area.

Chairperson Spiritis: Any questions from the Board?

Board Member Lanier: Yes.

Chairperson Spiritis: Commissioner Miller-Anderson.

Board Member Miller-Anderson: It wasn't me.

Board Member Lanier: Me.

Chairperson Spiritis: Commissioner Lanier. [Inaudible].

Board Member Lanier: Yes.

The.., the City of Clearwater, this.., this contract was piggybacked, again, by another City. So, does the Clearwater contract permit piggybacking by other municipalities?

Assistant Director Gallant: Yes.

Board Member Lanier: It do?

Assistant Director Gallant: Yeah.

This is.., this is the fourth one you [stammer].., this'll be the fourth one you guys have approved.

You previously approved…

Board Member Lanier: From…

Assistant Director Gallant: …this piggyback.

Board Member Lanier: …from Clearwater?

Assistant Director Gallant: Yes.

You approved this three times previously in.., in the last six months.

Board Member Lanier: So, why was no.., there are no comparative bid then?

Assistant Director Gallant: Because you've already adopted the piggyback previously.

And so, it will be.., this piggyback is probably three years old, four years old and, just like Director Niemann stated, that the pricing that we're getting is significantly lower than we would pay if we put this out to bid today.

If we put this out to bid today, this price will be almost double.

Board Member Lanier: I think this is a part of [inaudible] Procurement. And, you might know as well…

Assistant Director Gallant: Mm.

Board Member Lanier: …a procurement issue.

What is the threshold that triggers a competitive bid?

[Pause]

Board Member Lanier: Does anybody know that?

Ms. Ammons?

Procurement Director Ammons: Good evening. LaTonya Ammons, Director of Procurement for the City of Riviera Beach.

Per the Code of Ordinances for the City of Riviera Beach, $25,000 is the threshold to trigger a competitive solicitation.

Board Member Lanier: Okay.

So, you.., you review and approve this piggyback?

Procurement Director Ammons: Yes.

Board Member Lanier: Okay.

So, justifying this noncompetitive award, how.., how do you do that?

Procurement Director Ammons: So, as Mr. Niemann has stated, and others in the past, competitive solicitations, or piggybacks are a way for us to yield competitive pricing, increase against the [inaudible] because it does take time for the procurement process.

So, piggybacking and cooperative agreements are definitely standard in the industry. We ask each other, does anybody have a particular contract that we could use because we can sometimes get favorable pricing, favorable terms, and it just cuts down as far as staffing and just the quality of work that we can do, based upon.., it helps balance out the need versus the actual persons that are working to do the work.

Board Member Lanier: Yeah.

And I.., I know that the Director.., Director, said that we've done it before but, you know, this is a million dollars and, you know, not to consider any.., it was zero competitive bidding and not to consider any other vendor for a million dollars is a lot, and, that Murphy Pipeline Contractors were the only vendors considered, that's a lot for a million dollars.

Procurement Director Ammons: Yeah.

So, what we look for is.., for a piggyback, is the original vendor did do the competitiveness. So, they.., they did the competition. You know, they posted the solicitation, they did the evaluation, and then the contact was awarded. That's for the piggyback.

Also, then for the.., and so, cooperative agreements operate very similarly as well. You usually have a lead agency that does the work, really, on our behalf and…

Board Member Lanier: So, do we know how they do it?

Procurement Director Ammons: Do we know how they do it?

Board Member Lanier: Yes.

Procurement Director Ammons: The same standards…

Board Member Lanier: Same as the City's?

Procurement Director Ammons: They would post the solicitation, they would post a RFP, they post a REQ, a request for qualifications, they would accept, they will evaluate, they will post, and there's an award.

Board Member Lanier: Yeah.

And.., and.., and that all sounds good but a million dollars is a lot to just not be competitive to competitor.., to put it out for bid.

That's just what I'm saying.

Procurement Director Ammons: If I may, ma'am?

In the industry…

Board Member Lanier: And, I know the industry and what the utilities...

Procurement Director Ammons: No.

I meant, we.., you can do a fire truck. I mean, those are millions of dollars. You can do construction. We don't have to go out for construction all the time. I know we do here, you know, in the City but I worked at entities that we used cooperative to do construction of ten, twenty, $30 million.

You do it.., you balance the work or the number of employees you have. You balance the need, you balance the expertise, and…

Board Member Lanier: [Inaudible].

Procurement Director Ammons: …so any.., a million dollars for us, meaning general, you know, is…

Board Member Lanier: No.

Procurement Director Ammons: …is not a lot.

Board Member Lanier: I... No, no, no.

I understand. And.., and I think that my issue with this is that when we do piggybacks, we bring in a company, we have no say so, so to speak, on the subs that they have. And, that's really what I'm concerned about.

That we keep piggybacking off of other cities and we have no control about the local participation. We have no control about the subs that's gonna be on that job. And it's a million dollars, they're gonna have to have some type of.., somebody in this City that may have that kind of experience for a sub.

So, I think that, you know, when you do all of these piggybacks, that's my heartburn with it, is that there is just no room for.., for local.., for local subs.

Procurement Director Ammons: I will concur with you on that topic.

Just for the Board's, you know, acknowledgment, I would need to probably double my Staff for the amount of work. No seriously.

[Chuckles]

Procurement Director Ammons: I mean, the average solicitation is fifty to seventy steps, or tasks, for the average solicitation, from the time we're asked, time of review, time to do research, before, you know, we put it out. We have to post, we have to answer questions.

It is actually not a quick.., necessarily the quick process from all of the steps. So, if we're averaging fifty to seventy steps per solicitation...

Board Member Lanier: But, I think that that's…

I think that's a good thing. And, it's a good thing because when the.., when the.., it comes to the City, we have some.., some say so on local participation, some say so on subs. So, I think

that when we have a.., an Agenda that's full of piggybacks, it gives me pause because we don't have that control anymore.

Procurement Director Ammons: Yes, ma'am.

Board Member Lanier: That's it.

Chairperson Spiritis: Finished Commissioner Lanier? Thank you. Thank you, Ms. Ammons.

Board Member Miller-Anderson: Mr. Chair?

Assistant Director Gallant: Mr. Chair?

Chairperson Spiritis: Yes.

Assistant Director Gallant: There's that one thing.

For this particular contract, there are no subs. It's self-performed. And, for this work, there's three companies nationwide to do this work. So, the chances of finding somebody, even in Palm Beach County, a contractor in Palm Beach County who can do this work, it's probably gonna be difficult.

Murphy Pipeline is based out of, I think, Miami. And so, they are in the State of Florida but there's literally three companies who do this kind of work nationwide. So.., and they're.., and they're self-performing all their work.

I know they have employees that live in Palm Beach County. I don't know if they live in Riviera Beach per se but they do have employees that live in Palm Beach County.

Chairperson Spiritis: Thank you, Assistant Director.

Vice Chair Davis Panier: Chair?

Can I…

Chairperson Spiritis: Yes.

Vice Chair Davis Panier: …ask a question?

Do you see that a majority of the.., the majority of the piggybacks that we do are for emergency services? Or items? Or, is it just across the board, we.., we just do a lot?

Executive Director Niemann: Mr. Chair, if I may?

Vice Chair Davis Panier: Because of the…

And I.., and I understand what Director Ammons was saying, it's convenience, the cost and everything. I understand that. But, what do you see?

Executive Director Niemann: Mr. Chair, if I may?

Chairperson Spiritis: Yes.

Executive Director Niemann: So, for the majority of the equipment, chemicals that we purchase, we either look for a co-op or a piggyback.

It makes it so it can be done quicker, more efficiently, with less Staff. Somebody's already done the exact same work that you're gonna undertake in a separate city that has the same exact requirements as.., as we do. So, it's all been competitively bid by statute. And so, we look for those.

The other advantage, especially when it comes to chemicals, if a contract's three years old, we're getting chemicals that are three years old. It's like buying gas at a price that was three years old. Maybe I'm paying a dollar ninety-eight three years ago.

But, my.., my point is, is we generally get, and.., and more often than not, I would probably say ninety-five percent of the time, get better prices using existing piggybacks. I mean, when a [stammer].., when a contractor visits me or I need a piece of equipment, the first question I ask is do you have a contract that I can use to buy this?

Board Member Davis Panier: Okay. Thank you.

Board Member Miller-Anderson: Mr. Chair?

Chairperson Spiritis: Yes.

Board Member Miller-Anderson: I know that it's been referenced a few times about other cities have already kinda done the work and the piggybacks are easy and we know that they've gone through a competitive process.

That's good to say. But, as we know, there are times we have had some issues with our Procurement and we don't know that they didn't have the same problems. So, we can't just say they did it, it was perfect, it worked out. They could have had issues too but we don't know that.

So, we know what we can do but we.., we're taking on something that we don't really.., it should've been competitively bid.., bidded, but we don't know that. We're just assuming that because it.., it made it to the table to be able to be a pig'.., piggyback.

So, I'm not.., that doesn't comfort me to say that it's.., you know, they've done all the hard work and all of this stuff because we don't know their processes. We know ours but we don't know theirs.

And, like I said, we've had some problem over the years in Procurement. So.., and where we've had to throw things out. So, we don't know that their process was done correctly either. So, that.., that part I'm not, you know, that doesn't comfort me in terms of saying that they've already done the work 'cause we don't know that they did the work.

I do appreciate that this project was within the District of two, where we have had some issues, quite a bit of issues. So, I know there's a lot of work that's been done over there, I can't really just.., don't know the amounts.

And.., and.., and.., and, you know, people are saying, oh, she's saying.., voting no to a lot of things tonight. There's a reason why I'm voting no. 'Cause I.., I don't vote no all the time. I'm voting for a reason.

Because, I have had some experiences that.., where I have not been able to trust what is being told to me. So, that's the reason why I'm voting no on a lot of things tonight. So, you know, there's a reason why I do things.

I'm not just up here voting no 'cause I feel like voting no. And, for you.., and for anybody to even suggest that makes no sense because that's just typically not how I operate.

But, I am not comfortable with voting yes on some of these Items. And, because of my previous experiences, and what I've been told, which may or may not have been true, I'm not putting my name on something as a yes on this type of money until I'm comfortable with what I'm being told.

Thank you.

Chairperson Spiritis: Thank you.

Board Member Guyton: [Stammer].

Board Member Lanier: Chair?

Just one more thing.

Board Member Guyton: Mr. Chair?

Chairperson Spiritis: Commissioner Lanier.

Board Member Lanier: I just want one more question.

Chairperson Spiritis: And then, Commissioner Guyton.

Board Member Lanier: Ms. Ammons, [chuckle], just one more question I need to ask.

‘Cause, I.., I really have been trying to figure out your.., not your but just in general, about piggybacking, sole source, single source. So, if it’s a piggyback and you said this is the only person that can do it, why would you not do a sole source or a single source?

What’s the difference?

Procurement Director Ammons: So, if I may, Chair?

A piggyback is not necessarily a sole source or a single source all the time. It can be. But, in a lot of these cases, there are others who have responded and solicited. So, I’m just asking to piggyback that contract. That’s it.

[Stammer] we don’t get into single source, sole source language based upon me saying, oh, okay. You.., [stammer]… It’s no difference then you going to a friend’s house, you see her couch and you say, I like the couch. How much did you pay for it? And, where did you get it from?

And then, she tells you, and you walk into that store and you say, I want that same couch, she paid that price, delivered to my house. I’m just piggybacking. I just have the information, someone else has already done the work for you.

A sole source is when only one person, or company, says that they can upgrade or certify or do the work. For instance…

Board Member Lanier: But.., but, let me stop you right there.

But, because he just said that it was.., that that was the only one that does that.., did this work.

Didn’t you say that? That this was…

Assistant Director Gallant: Like, three co’.., there’s, like, three companies.

Procurement Director Ammons: There were three others.

Board Member Lanier: So, it's three companies that do the work.

Assistant Director Gallant: Nation'.., like, two or three.

Chairperson Spiritis: Nationally.

Assistant Director Gallant: Yeah. That's it.

I.., I'd have to… Actually, it's in.., in part of your backup is the bid.., the bid [stammer].., bid tabulation for the companies that bid on this particular contract. And there was, literally, two companies, I think, or three.

I don't remember, I'd have to look at it.

Board Member Lanier: Yeah.

I didn't see that.

But, go ahead, Ms.., Ms…

Procurement Director Ammons: And so, to give everyone just an example of a sole source, if you have a Mercedes and they ask you to only use Mercedes parts, then they are.., that is a sole source. It's a guarantee. We have Microsoft as a software and IT can testify, we can only get the upgrades from Microsoft. That is a sole source.

A single source is, there may be others out there but we would like to only do business with.., so sole.., only person, single… I just want to do business with this particular one vendor.

Board Member Lanier: Give me an example of that, single source.

Procurement Director Ammons: A single source could be, in a previous role, in like a distribution center, there were two vendors who actually provided, let's say, just the.., the equipment where the R'.., not a RV but a tractor trailer comes up to unload their goods and services, and then you have that lift in the warehouse and there were two major vendors.

And so, I questioned and said why are you always wanting to use that one particular vendor when there's someone else? And, they said, oh, because we have all the spare parts. When it breaks, it's been out here for fifty years, there's no sense in going to get and starting to use a new vendor because then I can't maintain it.

So, that is a single source. You know, like, oh okay. Sometimes, there are justifications when you want standardization across an entity, that is a single source. You are admitting there could be others but I want to maintain consistency so I just wanna go with the single source. We've already been using them for the last fifty years, let's continue that relationship.

Again, every case is different, every case is not a single or sole. And, typically with a sole source, we ask for a letter from the original equipment manufacturer or some proof that no one else can do this.

Board Member Lanier: Oh, from the original?

Procurement Director Ammons: Yes, ma'am.

Board Member Lanier: I got you. Alright.

Very good.

Chairperson Spiritis: Alright.

Any other questions from the Board?

Commissioner Guyton, you had a question.

Board Member Guyton: Yes.

Just.., I just wanna say that there's been a lotta discussion about piggybacks and I have found that that is more commonly used than a lotta people think. And, not only more commonly used, it's preferred by some government agencies. That's their preferred method.

I work for the county. Oftentimes, piggyback is what we look for. There will be times when mistakes are made, as in the City here, in our procurement process but there's a state.., there.., there are state statutes that must be complied with.

You can go out there and do a competitive bid and you just willy nilly it.

So, I'm not concerned about if this one agency may have made a mistake or not. The.., the state statute give guidelines and if.., if there's a mistake made, oftentimes, somebody in the community will catch it, as with the case here, we got reported to the OIG for our Fire Station, on our bid.

Nobody ever talks about it. We violated state law. And, I'm gonna put it on the screen one night too and show you. There's a lot that was going on that a lotta people didn't know about.

But, my point is, this is common. We.., we.., we're making a big deal out of something that everyone does. And.., and.., and, you know, I just don't want us to get bogged down in a minutia with something that is commonly used.

That's all I have to say.

Board Member Lanier: Chair?

Chairperson Spiritis: Thank you.

Yes. Commissioner Lanier.

Board Member Lanier: I just wanna say to Commissioner Guyton, [stammer], I wasn't making a fuss about the piggyback.

My issue with the piggyback was the fact that we have very little control over local participation. That is what I was saying about it. It wasn't that it's not done by other cities or it's

something bad to do, it was that we lose control of local participation when we do piggybacks, if local participation is warranted.

So, that's the reason why I had.., I had.., I had some heartburn with that. And, not because, you know, whatever you said.

Chairperson Spiritis: Thank you.

Any other comments?

[Pause]

Chairperson Spiritis: Thank you, Ms. Ammons.

Director Ammons.

Clerk, call the vote.

District Clerk Hall: Vice Chair Davis Panier?

Vice Chair Davis Panier: Yes.

District Clerk Hall: Board Member Guyton?

Board Member Guyton: Yes.

District Clerk Hall: Board Member Lanier?

Board Member Lanier: No.

District Clerk Hall: Board Member Miller-Anderson?

Board Member Miller-Anderson: No.

District Clerk Hall: Chairperson Dr. Spiritis?

Chairperson Spiritis: Yes.

District Clerk Hall: The Item passes with Board Members Lanier and Miller-Anderson dissenting.

Chairperson Spiritis: Okay.

Clerk.

7d. <u>ITEM NO. 7D</u>

District Clerk Hall: Mr. Chair, we are on Item 7d.

District Clerk Hall: **RESOLUTION NUMBER 42-26UD: A RESOLUTION OF THE BOARD OF DIRECTORS OF THE CITY OF RIVIERA BEACH UTILITY SPECIAL DISTRICT, PALM BEACH COUNTY, FLORIDA, APPROVING THE PURCHASE OF LIME FROM LHOIST, LLC IN AN AMOUNT NOT TO EXCEED $210,000.00 FROM THE WATER TREATMENT PLANT CONTINGENCY ACCOUNT NUMBER 41131103-559990; AND AUTHORIZING THE UTILITY SPECIAL DISTRICT FINANCE DIRECTOR TO MAKE PAYMENTS FROM THE WATER TREATMENT PLANT OPERATING ACCOUNT NUMBER 41131103-559990 IN AN AMOUNT NOT TO EXCEED $210,000.00; AND PROVIDING AN EFFECTIVE DATE.**

JOSHUA NIEMANN, UTILITY SPECIAL DISTRICT EXECUTIVE DIRECTOR, (561) 845-4185

District Clerk Hall: Mr. Chair, there are no comment cards on this Item.

The acceptance of the cards is closed.

Chairperson Spiritis: Okay.

Is there a motion?

Board Member Guyton: So moved.

Chairperson Spiritis: Moved by Commissioner Guyton.

Is there a second?

Vice Chair Davis Panier: Second.

Chairperson Spiritis: Seconded by Commissioner Davis Panier.

Director.

Executive Director Niemann: Mr. Chair, if I may?

So, as.., as is stated in the title, this is for the purchase of lime, which is our primary treatment chemical for our lime softening system. This will get us through the rest of Fiscal Year 2026 and into 2027.

As stated during our budget presentation, in FY 25, we purchased over $1.4 million worth of water from Seacoast. And, in FY 26, or to this point in FY 26, we purchased less than $30,000.

And that means we're treating our own water. So, with the treatment of our own water, is additional chemicals and that's what this is.

Chairperson Spiritis: Any questions from the Board?

Board Member Lanier: Is…

Chairperson Spiritis: Commissioner Lanier.

Board Member Lanier: Is this in line with the historical pricing for lime?

Executive Director Niemann: Yes, ma'am.

This is the same exact price that we've been paying all year.

Board Member Lanier: So, how much do we use of this in a year?

Executive Director Niemann: So, in general, and I can get you the exact numbers, we would be okay through the rest of the Fiscal Year.

But, because we've treated so much more of our own water this particular year, we're using so much more. And, like I was saying, last Fiscal Year, we had purchased water from Seacoast almost on a.., on a weekly basis.

And, this year that hasn't happened, so we're using more chemicals.

Board Member Lanier: [Inaudible].

Okay.

Chairperson Spiritis: You finished, Commissioner Lanier?

Board Member Lanier: Yes.

I'm done.

Chairperson Spiritis: Thank you.

Any other questions from the Board?

[Pause]

Chairperson Spiritis: Hearing none. Clerk.

District Clerk Hall: Vice Chair Davis Panier?

Vice Chair Davis Panier: Yes.

District Clerk Hall: Board Member Guyton?

Board Member Guyton: Yes.

District Clerk Hall: Board Member Lanier?

Board Member Lanier: Yes.

District Clerk Hall: Board Member Miller-Anderson?

Board Member Miller-Anderson: [Out].

District Clerk Hall: Chairperson Dr. Spiritis?

Chairperson Spiritis: Yes.

District Clerk Hall: The Item passes with Board Member Miller-Anderson out. Mr. Chair…

Chairperson Spiritis: Clerk…

District Clerk Hall: Our next Item is Item 7e.

District Clerk Hall: **RESOLUTION NUMBER 44-26UD: A RESOLUTION OF THE BOARD OF DIRECTORS OF THE CITY OF RIVIERA BEACH UTILITY SPECIAL DISTRICT, PALM BEACH COUNTY, FLORIDA, ADOPTING THE FISCAL YEAR 2026-2027 OPERATING BUDGET AND PROVIDING AN EFFECTIVE DATE.**

RANDY M. SHERMAN, CHIEF FINANCIAL OFFICER, CPA, CGFO, CTP, (561) 845-4045

District Clerk Hall: Mr. Chair, there are no comment cards on this Item.

The acceptance of the cards is closed.

Board Member Guyton: So moved.

Chairperson Spiritis: Okay.

Moved by Commissioner Guyton.

Is there a second?

Vice Chair Davis Panier: Second.

Chairperson Spiritis: Seconded by Commissioner Davis Panier.

Director.

Executive Director Niemann: Mr. Chair, at this time, if we have any questions in regards to the presentation I gave earlier, we can bring Mr. Sherman up to the podium in regards to the timing and how this needs to be approved to get through the budget.

Board Member Lanier: So, Chair?

So…

Chairperson Spiritis: Yes.

Commissioner Lanier.

Board Member Lanier: We had a budget…

We had a.., we had a budget workshop earlier and now we're voting on it?

Chairperson Spiritis: I think [stammer]…

Director?

Executive Director Niemann: Mr. Chair, if I may?

Chairperson Spiritis: Yes.

Executive Director Niemann: Yes.

That is correct.

Board Member Lanier: So, when did we do workshops and then vote on the budget the same day?

District Finance Director Sherman: Hello. Randy Sherman, Finance Director for the District.

So, remember, this budget hearing was supposed to be last week and then it was supposed to be Monday and it got forced into today. So, here.., here's the dilemma and I'll tell you there is a [inaudible].

So, you need to adopt the Utility District budget before you adopt the City budget. So, if the City budget is gonna get approved on September 16th, you have to have adopted the Utility budget before that.

Because, when you adopt the City budget, you're adopting all the budgets in the City, including the Utility District…

Board Member Lanier: Right.

District Finance Director Sherman: …budget.

So, in the past, when the Utility District meeting was the same meeting as the second meeting of the City, you could do them both on the same night. Right? So, you could take this budget and do it in September.

If you wanna have the Utility District budget and the City budget adopted the same night, we can do that in September but now you're gonna have to change your calendars around and.., and make sure those two meetings occur on the same night.

So again, we could delay this 'til September but the Utility District meeting would have to be before the City…

Board Member Lanier: Right.

And, I do not feel comfortable with.., with going through a budget... And, I think that when I got here, it was 6:00 o'clock and you guys were almost done.

District Finance Director Sherman: Yep.

Board Member Lanier: Thirty minutes on a budget.

And then, we gotta vote for it? I am not comfortable with that. I mean, we're gonna have to look at something else people because that's just too quick of a turnaround when we just went over thirty minutes of the budget and then now we're gonna vote on it.

That is just not good.

[Inaudible comment]

Board Member Lanier: Yeah.

They said that they finished, in thirty minutes. And, now we gotta vote on it. And, that's.., that's just not a comfort level for me, colleagues, that we're gonna have thirty minutes on the budget and then two hours later vote on it.

That's just.., that's… I.., I got problems with that. If you can get.., give me some space, give us some other time that we can do this because this… We can't.., we can't do that in the same day. That's just…

Board Member Miller-Anderson: Chair?

Chairperson Spiritis: Commissioner Miller-Anderson.

Board Member Miller-Anderson: I mean... Again, I.., I will go back and watch the meeting.

But, I do not recall hearing that the meeting was changed to 5:30 for that budget. And now you're saying you all finished it within the thirty minutes? And, we're supposed to be voting on it now makes…

That.., that's unheard of. It's almost like this budget is being pushed down our throats really quick like... Just this whole flow of the budget period, you know, trying to limit how much time we spend on it, trying to now rush this one through.

I don't know what's going on but we need to be transparent and not try to snowball this all in one day or two. I don't recall ever having a year of a budget where we, one, we don't even have the Manager here while we're doing the budget. That's number one.

And then now, we're rushing through this, seems very suspect to me.

What.., how many… I.., I know I just came from the back but what are we saying? We don't have time to.., we don't have any more days to do this?

District Finance Director Sherman: No.

Again, you could pass the Utility budget in September.

Board Member Miller-Anderson: Mhmm.

District Finance Director Sherman: As long as you do it before the City budget gets adopted.

Board Member Miller-Anderson: And.., and…

District Finance Director Sherman: So, if you wanna have another Utility meeting to come back and deal strictly with the budget, you certainly could do that or, again, do it on the same night, you know, when you have the second reading of the City budget.

Board Member Lanier: Isn't the budget for the…

I'm sorry. Chair?

Chairperson Spiritis: Commissioner Lanier.

Board Member Lanier: What…

The budget for the City is the 16th, right? Don't we have a.., we have a meeting on the…

District Finance Director Sherman: Your.., your City budget, you have your first public hearing on September 8th, and then…

Board Member Lanier: Right.

District Finance Director Sherman: …the second reading would be scheduled for September 16th.

Board Member Lanier: So, we.., why can't we do it on the.., on the 2nd?

Chairperson Spiritis: Clerk, when is our next UD District meeting?

District Clerk Hall: It would be the 4th Wednesday of September.

Board Member Lanier: No.

We can push it to the 2nd.

District Finance Director Sherman: It would.., I would be the 23rd.

So, that's a problem, is that meeting is now… Since you moved to the fourth week, it's now coming after. So, that's why we had to put it on this one to… But again, you can move the 23rd and mar'.., marry the two up in the month of September if you'd like.

Board Member Miller-Anderson: Chair?

Board Member Guyton: Mr. Chair?

Chairperson Spiritis: [Stammer].

Board Member Miller-Anderson: Chair?

Chairperson Spiritis: Miller-Anderson.

Board Member Miller-Anderson: So, what…

Chairperson Spiritis: Commissioner.

Board Member Miller-Anderson: What did you say about the 8th?

It can't be done on the 8th?

District Finance Director Sherman: I think you have a CRA…

Board Member Miller-Anderson: Or…

District Finance Director Sherman: …meeting.

Oh no. No. It wouldn't.., it would be talked about at the public hearing, yes. But, you have… [Stammer] you're voting… That's just your first vote. Your se'.., it's your second vote that.., that I'm concerned about.

Board Member Miller-Anderson: So, we can talk…

We can talk about the budget on the 8th.

District Finance Director Sherman: You.., you could.

Board Member Miller-Anderson: Is that the only one?

We don't have anymore? That's the only one? The last one?

District Finance Director Sherman: That's all we have scheduled at this time.

Board Member Miller-Anderson: So, can we look at doing.., having another.., having the discussion on the 8th?

Along with what else? Just, the whole…

District Finance Director Sherman: [Stammer]…

Board Member Miller-Anderson: …the whole budget is…

District Finance Director Sherman: It's all the budgets on the 8th. Correct.

Board Member Miller-Anderson: Okay.

Board Member Lanier: Yeah. We can do the same day, right?

Board Member Guyton: Mr.., Mr. Chair?

Chairperson Spiritis: Yeah.

Commissioner Guyton.

Board Member Guyton: The 16th is gonna be a bad day.

Several of us are going to be in Washington, DC.

But, I'm sitting here listening to one of my colleagues looking for another day, who just, last week, was rushing us to get through all of them in one night. She didn't wanna do them… Ms. Miller-Anderson didn't wanna go home. She wanted to rush them.

And then, we said, no. We'll do them on another day. Naw, we can do them tonight. Now, she's saying, no, don't rush it. No, let's do them on another night. We have to come together at some point.

Commissioner Miller-Anderson is the one that didn't want to move it to another day. Now, she's the one pushing to move it to another day.

I'm not…

Board Member Miller-Anderson: Mr. Chair?

Board Member Guyton: …understanding.

Make it make sense.

Board Member Miller-Anderson: I'm gonna make it make sense.

Chairperson Spiritis: [Stammer]…

Board Member Guyton: Wait.

Board Member Miller-Anderson: Chair?

Board Member Guyton: Wait.

Chairperson Spiritis: He…

Board Member Guyton: I'm.., I'm not done.

Chairperson Spiritis: Commissioner Guyton.

Board Member Guyton: I'm not…

Chairperson Spiritis: Yes.

Board Member Guyton: I'm not done.

But, the 16th, we're.., it's not a good date. We need to take that off the table. But…

Board Member Miller-Anderson: [Inaudible].

Board Member Guyton: I don't.., I don't mind trying to work with them but don't do it at your convenience.

You wanna rush it one night and now the night that you may not.., come a little late, now you're saying, well, we're gonna have to move it now. I don't.., I'm… We have a timeframe that we have to do this in.

We agreed to be here at 5:30. You can go back and look at the [stammer] at the tape. And, because it didn't happen on your end, now you're saying that, let's hold the whole process up.

I don't mind working with them…

Board Member Lanier: Chair?

Board Member Guyton: …but I'm just…

Board Member Miller-Anderson: I.., I got this.

Board Member Guyton: …pointing out that that's a problem with me.

Board Member Miller-Anderson: I'm next.

Chairperson Spiritis: Commissioner Miller-Anderson.

Board Member Miller-Anderson: So, Mr. Guyton, you're talking about someone who has no problems with meeting on a Saturday, meeting 'til 1:00, 2:00 o'clock in the morning.

That's…

Board Member Guyton: Not me.

Board Member Miller-Anderson: I'm…

Board Member Guyton: Not me.

Board Member Miller-Anderson: …I'm just telling you, if it's trying to get the business done, I don't have a problem with being here, so, that has absolutely nothing to do with it.

What my suggestion was, not having a meeting four days in a row if we didn't have to because the meetings were.., you were cutting them down to 9:00 o'clock but yet, we would spend an hour on one thing.

That is what I was saying, we could probably get through more of it within a day and not have to meet four days. Well, people drug out the meeting, you didn't get through majority of the budget. So then, we are right where we are now.

We've never had an issue with trying to get through a budget meeting. That has never been a problem at all. We did not have to have a ton of days to meet either. But, it's a problem now because we're being limited to, okay, we can only do.., I can only handle three departments tonight, and then, I gotta go home. That.., that.., that's new to me.

So, I have never had a problem with being here when it's time to do the meeting. So, me saying now, we need to make sure that we have time to go over the budget, that's because the time was changed.

And, I was not late. I was not aware the meeting changed from 6:00 o'clock to 5:30. And again, I was on the meeting the entire time the other night. So again, it's not that I was late, I was not aware it changed times.

Now, meeting on the 8th, we gotta do that anyway. So, why do we have to go ahead tonight and vote on this when we're coming back on the 8th anyway so if there are any other concerns from anyone, we still have an opportunity to do that on the 8th.

The 16th is something totally different. But, the 8th, it's there already, it's built in already, why is it that we need to go ahead and push through and vote on this tonight when we could have that night to do it?

There's no issue with that. That's not an extra night that's being added, that's not me wanting to have an extra day, none of that.

So, you know, again, you don't hear me up here complaining about, I gotta go hurry up and go home and go to sleep, or I can't stay up past 9:00. No. None of that.

Board Member Guyton: No.

[Stammer] and we can…

Chairperson Spiritis: Commissioner Guyton…

Board Member Guyton: …do it on the 8th.

I'm.., I'm sorry, Mr…

Chairperson Spiritis: Yeah.

Commissioner Guyton.

Board Member Guyton: We can do it on the 8th.

And.., and the reason why we're taking so long now…

Board Member Miller-Anderson: Oh.

[Stammer]…

Board Member Guyton: …is because…

Chairperson Spiritis: Please. One at a time.

Board Member Guyton: …I did not…

We did not have the questions under the different Administration that we're having now.

Board Member Miller-Anderson: You're right.

Because…

Board Member Guyton: That's right.

Board Member Miller-Anderson: …there's more…

Board Member Guyton: Wait, wait.

Chairperson Spiritis: One at a time.

Board Member Miller-Anderson: …suspicious stuff.

Chairperson Spiritis: Respect…

Respect your…

Board Member Miller-Anderson: More…

Chairperson Spiritis: …colleague, please.

Board Member Miller-Anderson: …suspicious things are…

Board Member Guyton: So.., so...

Chairperson Spiritis: Commissioner Miller-Anderson…

Board Member Miller-Anderson: …going on now.

Chairperson Spiritis: …please respect…

Board Member Miller-Anderson: Be very clear…

Chairperson Spiritis: …Commissioner Guyton while he speaks…

Board Member Miller-Anderson: …as to why that is the case.

Chairperson Spiritis: Please, let one.., one person speak at a time.

Thank you.

Board Member Miller-Anderson: Yeah.

But you heard what I said though.

Board Member Guyton: Oh God.

Okay.

Chairperson Spiritis: Commissioner Guyton.

Board Member Guyton: Clearly.., clearly, clearly some people are now finding a lotta things wrong…

Board Member Miller-Anderson: Let's ask the…

Board Member Guyton: …that they didn't…

Board Member Miller-Anderson: …the State Attorney what he thinks about some of this stuff.

Chairperson Spiritis: Let's not make a debate outta this.

Board Member Guyton: Would you stop.., would you stop...

Chairperson Spiritis: Respect your colleagues please.

Board Member Guyton: …Ms. Miller. Please.

Board Member Miller-Anderson: Let's.., let's keep…

Board Member Guyton: [Stammer].

Board Member Miller-Anderson: …it real and…

Chairperson Spiritis: Please.

Board Member Miller-Anderson: …honest.

Chairperson Spiritis: Commissioner Miller-Anderson, please, one at a time.

Thank you.

Board Member Miller-Anderson: Be very honest about what you're saying…

Chairperson Spiritis: Please.

Board Member Miller-Anderson: …sir.

Board Member Guyton: I'm being very honest.

Board Member Miller-Anderson: Talk about the State Attorney's [inaudible]…

Chairperson Spiritis: Please.

Board Member Guyton: [Inaudible].

Chairperson Spiritis: Let's not make this a debate.

Let's respect…

Board Member Guyton: We will…

Chairperson Spiritis: …each other.

Board Member Guyton: We will accept, back then, whatever is said…

Board Member Miller-Anderson: We didn't have that.

Board Member Guyton: …and keep it moving.

But now, we wanna pick everything apart, everything apart, every'... Which is fine. Which is fine, but you didn't do that with the other Administration.

Board Member Miller-Anderson: Because we didn't have…

Board Member Guyton: Whatever…

Board Member Miller-Anderson: …that issue.

Board Member Guyton: …they put forward, you…

Board Member Miller-Anderson: We...

Board Member Guyton: …agreed to it.

Board Member Miller-Anderson: I knew what was…

Board Member Guyton: …and you kept it…

Board Member Miller-Anderson: …going on.

Board Member Guyton: …moving.

Chairperson Spiritis: Please, one …

Board Member Miller-Anderson: There's a lotta stuff…

Chairperson Spiritis: …at a time.

Board Member Miller-Anderson: …happening…

Chairperson Spiritis: After Commissioner…

Board Member Miller-Anderson: …now…

Chairperson Spiritis: …Guyton speaks…

Board Member Miller-Anderson: …that is not…

Chairperson Spiritis: Commissioner Miller-Anderson…

Board Member Miller-Anderson: …being shared with the…

Chairperson Spiritis: …you will get to…

Board Member Miller-Anderson: …entire Board.

Chairperson Spiritis: …speak.

Board Member Miller-Anderson: So yeah, it's a problem now, for me.

I'm just telling you. You can't fault me for the way I'm thinking and feeling.

So, I wanna make sure that I am voting on the correct stuff.

Board Member Guyton: Okay.

Board Member Miller-Anderson: And not being told lies.

Board Member Guyton: Let's identify a date because we're.., we're not getting anywhere…

Chairperson Spiritis: Okay.

Board Member Guyton: …now.

Let's identify a date that we're gonna do this and lets.., let's get the employees home.

Chairperson Spiritis: Is there…

Would the Board like to change the date? Is there a consensus to change the date of this?

Board Member Guyton: Yeah.

I don't mind but…

Board Member Lanier: I don't think we're changing the date.

I think that the issue for me, that I brought up, was the…

Board Member Guyton: [Inaudible].

Board Member Lanier: …fact that we just…

Board Member Guyton: Can we just…

Board Member Lanier: …had the budget…

Board Member Guyton: …pick a date?

Can we just pick a date now where everybody has articulated…

[Inaudible comment]

Board Member Guyton: …their concerns.

Board Member Lanier: Get throwed off by...

Board Member Miller-Anderson: But, what do you mean pick a date?

Board Member Lanier: …change?

Board Member Miller-Anderson: The 8th is still on there, right?

'Cause that's already…

Board Member Guyton: I'm.., I'm saying…

[Inaudible comment]

Board Member Guyton: …if you don't wanna do it tonight, let's pick another date.

Board Member Miller-Anderson: Oh.

Board Member Guyton: Just.., don't keep going back and forth.

[Inaudible audience comment]

Chairperson Spiritis: Picking another date, that's what we're doing.

Board Member Miller-Anderson: He said the 8th.

Board Member Lanier: I though you said the 8th.

District Finance Director Sherman: Mr.., Mr…

Just remember, the 8th is your public hearing night.

[Inaudible audience comment]

District Finance Director Sherman: So, you can…

That's when you start taking comments. Then, you can talk about the budget…

Unk.: Right. Yeah.

District Finance Director Sherman: …after you take your comments.

But, yes, you could.., you could do the 8th.

Board Member Lanier: That's even better.

Chairperson Spiritis: But, we could approve it on September 8th?

District Finance Director Sherman: Well, no.

'Cause the Board has to approve it. So, September 8th is the City Council public hearing. You then have to come back to…

Board Member Lanier: [Inaudible].

District Finance Director Sherman: …a Utility…

Chairperson Spiritis: Yeah.

So, it'd be after…

District Finance Director Sherman: …District meeting.

Chairperson Spiritis: Be after the 8th?

District Finance Director Sherman: Correct.

But, if you're moving off the 16th, I don't know where we're moving that meeting to. Again, you could do the Utility and the City that same night.

Chairperson Spiritis: So, that….

District Finance Director Sherman: The only one that requires…

District Attorney Wynn: Mr. Chair?

District Finance Director Sherman: …the two votes is.., is the…

Chairperson Spiritis: Hold…

District Finance Director Sherman: …City vote.

Chairperson Spiritis: …hold on one second, please.

So, Commissioner Guyton, you're.., you're.., you're gonna be away on the 16th?

Board Member Guyton: Yes.

I will be away on the 16th.

Chairperson Spiritis: From the…

Is it.., is it the actual 16th or you're going before…

Board Member Guyton: I'm leaving…

Chairperson Spiritis: …the 16th?

Board Member Guyton: …on the 16th.

Chairperson Spiritis: You're leaving on the 16th.

And, when do you come back?

Board Member Lanier: Yeah.

Me as well.

Board Member Guyton: And I.., I…

Chairperson Spiritis: Right.

Board Member Guyton: …think Ms.., I mean, Councilwoman Lanier just said she's leaving on that date too.

Board Member Lanier: Yeah.

I'll be leaving…

Board Member Guyton: Um…

Chairperson Spiritis: When do you return?

Board Member Guyton: I don't return until…

Monday the 21st?

Vice Chair Davis Panier: That's what I'm thinking.

Or 20th, the Sunday is the 20th.

Board Member Miller-Anderson: Mr. Sherman…

Mr. Chair?

Chairperson Spiritis: So, the 21st is Monday?

Board Member Lanier: Yes.

Chairperson Spiritis: Okay.

Is Monday okay? The 21st, 'cause that…

Board Member Miller-Anderson: Mr. Chair?

Chairperson Spiritis: …gives us two days before the 23rd, correct?

District Finance Director Sherman: Correct.

Chairperson Spiritis: So, we can…

We would make that date if we…

Board Member Guyton: Wait.

I'm not sure.

Chairperson Spiritis: …[inaudible] on the 21st.

Board Member Lanier: Right.

Board Member Guyton: Let me see if I'll be back on that day.

Chairperson Spiritis: Yeah. Let's just check.

Board Member Miller-Anderson: That's a holiday.

Is that a holiday?

District Attorney Wynn: Mr. Chair?

Vice Chair Davis Panier: It is a holiday.

I think I hear… Is that Ms. Wynn…

[Inaudible comment]

District Attorney Wynn: It is.

Chairperson Spiritis: Attorney Wynn, yes.

District Attorney Wynn: I have a question.

And, I think it's for Randy. I wanna make sure we do this right. We would.., whatever date you choose, the 21st, we have to advertise it, I believe, it's a Special Utility District meeting because it's not your regular meeting.

Unk.: Correct.

District Attorney Wynn: Also, Mr. Sherman, if they wanted.., since they're meeting.., the Council is meeting on the 8th anyway, could they advertise for a Special Utility District Board

meeting to have the presentation.., if you're doing the presentation over again, that was missed tonight, and have the…

[Inaudible comment]

District Attorney Wynn: …the Utility District budget, which is what, I believe, you wanted to do tonight, on the 8th?

District Finance Director Sherman: They could.

Just remember the public hearing is a time certain, so they'd have to do it before 6:00 o'clock.

Chairperson Spiritis: So…

District Attorney Wynn: Okay.

Chairperson Spiritis: We can…

District Attorney Wynn: So then that's right.

Chairperson Spiritis: …meet at 5:30.

District Attorney Wynn: That will probably…

But then, you'd have to stop at 6:00 and then go back to the Utility District meeting, just so you know how the logistics work.

Chairperson Spiritis: Right.

But it's only one Item that'll be… It'll be a special meeting with only one Item on the Agenda.

District Attorney Wynn: One or two.

If you're doing the presentation over again, if you're requiring the Utility District Director to do the presentation over again, so that Ms. Miller-Anderson and Ms. Lanier can answer.., can ask any questions they want…

Chairperson Spiritis: Right.

District Attorney Wynn: …because they missed the presentation tonight, and then, the second Item would be the adoption.

Correct, Mr. Sherman?

District Finance Director Sherman: Correct.

Unk.: Okay.

District Attorney Wynn: So, that's a possibility.

But, whatever you do, my point is, that you have to advertise it as a Special Utility District Board meeting.

Chairperson Spiritis: Okay.

Does anyone have a.., a problem with us doing it at 5:30 on the 8th?

Board Member Lanier: No.

Chairperson Spiritis: Special meeting?

Board Member Lanier: Now I know.

Chairperson Spiritis: That's okay with Commissioners?

All good?

Vice Chair Davis Panier: Mhmm.

Board Member Guyton: Yeah. [Inaudible].

Board Member Miller-Anderson: No.

Mr. Chair?

Chairperson Spiritis: Commissioner Miller-Anderson.

Board Member Guyton: [Inaudible].

Board Member Miller-Anderson: Is there a problem down there?

Board Member Guyton: Yeah. Yes. Yes.

Board Member Miller-Anderson: What's the…

Board Member Guyton: Yes, I do.

Board Member Miller-Anderson: …problem?

Chairperson Spiritis: Please.

Come on. Let's…

Board Member Guyton: I.., I [stammer]…

Chairperson Spiritis: …respect each other please.

Board Member Miller-Anderson: What's your problem?

Board Member Guyton: Because we're agreeing to do it on a time that you suggested.

Board Member Miller-Anderson: I didn't…

Sir, I didn't say 5:30. We're talking about the time right now. I said the…

Board Member Guyton: [Inaudible].

Board Member Miller-Anderson: …8th was fine.

But, we're talking about time.

Chairperson Spiritis: Okay.

So…

Board Member Miller-Anderson: And, everyone…

Chairperson Spiritis: …Commissioner Anderson…

Board Member Miller-Anderson: …knows that I get off work late on Tuesdays.

You may not know that but [stammer] everybody on the Board who has been for a while knows that. So, that's why I'm saying what I'm saying.

Please stop having a comment every time I say something.

Board Member Guyton: Well, wait, wait, wait.

Chairperson Spiritis: Please, one at a time.

Board Member Guyton: Wait, now wait.

Chairperson Spiritis: Please ask to be recognized.

Thank you.

Board Member Guyton: Yeah.

Chairperson Spiritis: Commissioner Guyton.

Board Member Guyton: Yes.

I don't have a comment every time you say… You're getting a little huffy down there now.

Board Member Miller-Anderson: I…

Board Member Guyton: And…

Board Member Miller-Anderson: Because…

Board Member Guyton: …and anytime…

Board Member Miller-Anderson: Because of you.

Board Member Guyton: Wait.

Stop. Stop. Anytime…

Chairperson Spiritis: Please don't…

Board Member Guyton: …you interrupt me…

Chairperson Spiritis: …[inaudible] at each other.

Please wait to be called on.

Board Member Guyton: Anytime you interrupt me, I don't get huffy.

I step back and now you act like you're finna chastise me. That.., that's…

Board Member Miller-Anderson: That's what you try to do to me.

Board Member Guyton: …not gonna happen here.

Board Member Miller-Anderson: That's what you're trying to do to me.

Board Member Guyton: No, no. No, no.

I'm not the one.

Board Member Miller-Anderson: I'm not either.

And you already…

Board Member Guyton: Okay.

Board Member Miller-Anderson: …know that.

Board Member Guyton: Well, I'm.., I'm telling you, [stammer]…

Chairperson Spiritis: Okay.

Let's…

Board Member Miller-Anderson: Mr. Chair?

Chairperson Spiritis: …let's.., let's not go back and forth.

Please…

Board Member Miller-Anderson: Mr. Chair?

Board Member Guyton: You know what?

Let.., let's just vote tonight on it. Let.., let's vote…

Board Member Miller-Anderson: Mr. Chair?

Board Member Guyton: …on the budget tonight.

Chairperson Spiritis: You wanna vote tonight on it?

Board Member Guyton: Yes.

Chairperson Spiritis: You wanna vote tonight on it?

Vice Chair Davis Panier: Yes. I can do it.

Board Member Guyton: Yes.

Chairperson Spiritis: Okay.

Board Member Miller-Anderson: Do what…

Chairperson Spiritis: The majority of the Board…

Board Member Miller-Anderson: …ya'll do.., gotta do.

Chairperson Spiritis: …wants to vote tonight.

Board Member Miller-Anderson: You'll [inaudible] do it then.

Whatever.

Chairperson Spiritis: Thank you.

Board Member Miller-Anderson: That's on you.

Board Member Lanier: How we gonna...

Chairperson Spiritis: Clerk, please call the vote.

Board Member Miller-Anderson: They're voting on it.

Chairperson Spiritis: We're gonna call the vote right now.

Board Member Lanier: We're voting on what?

Chairperson Spiritis: We're voting on…

Board Member Guyton: The budget…

Chairperson Spiritis: …the budget.

Board Member Guyton: Right now.

Chairperson Spiritis: Please, call…

Board Member Lanier: On the budget?

Board Member Guyton: Yes.

Chairperson Spiritis: Please…

District Clerk Hall: Vice Chair…

Board Member Miller-Anderson: Right behind them.

District Clerk Hall: …Davis Panier?

Chairperson Spiritis: Call the vote.

Vice Chair Davis Panier: Yes.

Board Member Miller-Anderson: Following right behind them.

District Clerk Hall: Board Member Guyton?

Board Member Guyton: Yes.

Board Member Lanier: No.

I thought we were gonna wait.

[Chuckle]

District Clerk Hall: Board Member Miller-Anderson?

Board Member Miller-Anderson: No.

District Clerk Hall: Chairperson Dr. Spiritis?

Chairperson Spiritis: Yes.

District Clerk Hall: The Item passes with Board Members Lanier and Miller-Anderson dissenting.

Board Member Guyton: Okay.

Board Member Lanier: So, that's…

Board Member Guyton: Problem…

Board Member Lanier: …how ya'll do it.

Board Member Guyton: …solved.

Chairperson Spiritis: [Stammer].

Board Member Lanier: That's how ya'll do business.

Board Member Guyton: Problem solved.

Chairperson Spiritis: Thank you.

Please, wait to be recognized.

Board Member Lanier: Can I be…

Chairperson Spiritis: Okay.

Board Member Lanier: …recognized?

Madam…

Chairperson Spiritis: Commissioner Lanier.

Board Member Lanier: Chair? I turn around and cough one time, and now you guys have [stammer] approved the budget.

I thought that we were gonna do it on the 8th.

Board Member Miller-Anderson: They got their three votes, they don't need...

Chairperson Spiritis: Well, the majority of the Board decided to do it tonight.

Board Member Miller-Anderson: They decided to move on.

Chairperson Spiritis: Okay.

Board Member Miller-Anderson: So, where are we?

Chairperson Spiritis: Okay.

Thank you.

District Finance Director Sherman: All set?

Chairperson Spiritis: Director, we appreciate it.

Commissioner Davis Panier, you had something you wanted to say? Okay.

8. ITEM NO. 8

DISCUSSION AND DELIBERATION

9. ITEM NO. 9

CONFIRMATION OF DIRECTION

Chairperson Spiritis: City Manager, you understand the directives and…

The two of you work together. So, this is a.., a different situation where the City does the Administration and the Executive Director does the operations on a day to day basis.

You both understand the requests that were made by the Council tonight? For information? You'll make sure that that gets done?

10. ITEM NO. 10

DISCUSSION BY CITY MANAGER/EXECUTIVE DIRECTOR

Chairperson Spiritis: And, there were other directives, I believe, concerning some of the speakers.

Do you wanna speak on any of these items, Director, the questions that came up during public comment?

Executive Director Niemann: Mr. Chair, I.., I do plan on getting with Ms. Curry to identify the issues they were speaking to.

And then, the name of the resident that spoke before her, I'll get with the City [stammer].., Ms. Hall and find out her name and get with her as well.

In regards to Mrs. Paulk's driveway, I did write a report that stated that we didn't have any other additional issues within the area. We do believe that she was feeling vibrations within the area but we strongly attribute that to the work being.., happening right behind here.

The.., the way that the pipe bursting project works is very minimally impact. They.., they dig a small trench about every fi'.., I think it's, what, about two hundred and fifty yards, maybe less depending on where they line up.

And then, they put a piece of pipe inside a pipe and they pull it back through, so basically, reams the other pipe and makes it larger, installing a new one. So, it's very minimally impact.

It does have some impact because it's, you know, new construction but, being that we do not believe that those incidences happened because of the project… We had multiple other residents on that same street that didn't have any of the same occurring issues as she did.

Chairperson Spiritis: Okay.

And, pipe bursting does save us a substantial…

[Inaudible audience comment]

Chairperson Spiritis: …amount of money, right?

[Inaudible audience comment]

Chairperson Spiritis: Please do not…

Please do not call out…

[Inaudible audience comment]

Chairperson Spiritis: Please do not call out.

We'll ask you.., for you to be removed.

[Inaudible audience comment]

Chairperson Spiritis: Please do not call out.

We'll have to have you removed if you do that again.

Thank you.

[Inaudible audience comment]

Chairperson Spiritis: Please.., please…

[Inaudible audience comment]

Chairperson Spiritis: …please, do not call out.

Please keep… Keep it quiet.

Thank you.

[Inaudible audience comment]

Chairperson Spiritis: Please, let the meeting proceed.

[Inaudible audience comment]

Chairperson Spiritis: Director, anything else?

Executive Director Niemann: No.

That's all I have.

Chairperson Spiritis: Okay.

Board Member Lanier: So…

Chair?

Chairperson Spiritis: Assistant City Manager, do you have anything you wanna add to any of the public comments that were made?

Assistant City Manager Copin: Yeah.

Just one. One public comment wanted to know the Port and FP&L payments for their water usage. I'll get that data and have it back to you folks for the next meeting.

Chairperson Spiritis: Okay.

And… Thank you.

Any.., any other comments?

Board Member Lanier: Chair?

Chairperson Spiritis: Executive first…

Executive Director, any comments?

Executive Director Niemann: No, sir.

Chairperson Spiritis: No more, City Manager?

Any comments…

Assistant City Manager Copin: No, sir.

Chairperson Spiritis: …you wanna make tonight?

11. ITEM NO. 11

DISCUSSION BY DISTRICT ATTORNEY

Chairperson Spiritis: Counsel, any.., any comments you wanna make tonight?

Board Member Lanier: Yes.

Assistant City Attorney Tracey: Nothing from me. I'm not sure if Ms. Wynn has anything she wants to say. She's online.

Chairperson Spiritis: Ms. Wynn?

Any comments you wanna make?

District Attorney Wynn: No comments, sir.

Chairperson Spiritis: Okay.

12. ITEM NO. 12

STATEMENTS BY THE MAYOR AND BOARD

Chairperson Spiritis: Commissioner Lanier, you had something you wanna say?

Board Member Lanier: Yeah.

I wanted to ask. So, what's gonna happen on the 8th? 'Cause ya'll throwed me off with all of this. So, what's happening on the 8th?

[Pause]

District Clerk Hall: Madam Chair?

Board Member Lanier: Uhuh.

Chairperson Spiritis: Yes.

Board Member Lanier: I mean, I'm sorry.

Yeah.

Chairperson Spiritis: Clerk?

District Clerk Hall: The Finance Director has something.

Chairperson Spiritis: Okay.

Director Sherman.

District Finance Director Sherman: So…

Chairperson Spiritis: Thank you.

District Finance Director Sherman: So, on September 8th, that's the date of your public hearing for the budget.

That's the date and time, 6:00 p.m., that was advertised on your TRIM Notice, right? That you received in the mail, hopefully. So again, we will present all the budgets and then take public comment.

And then, that's where the Board deliberates whether you wanna make any changes to…

Board Member Lanier: So, we're taking…

District Finance Director Sherman: …the budget.

Board Member Lanier: …all the budgets, including the Utility District?

District Finance Director Sherman: Including Utility District.

Board Member Lanier: Okay.

Board Member Guyton: Mr. Chair?

Chairperson Spiritis: Any other comments?

Board Member Guyton: How…

Board Member Lanier: This says 6:00 o'clock.

District Finance Director Sherman: 6:00 o'clock.

Board Member Lanier: Okay. Yeah.

Chairperson Spiritis: Thank you, Commissioner Lanier.

Board Member Guyton: Um…

Chairperson Spiritis: Commissioner Guyton.

Board Member Guyton: Mr. Chair? Yeah.

How many more departments do we have?

District Finance Director Sherman: We have sixteen slides to go through tonight.

Board Member Guyton: And, that'll be the end of…

District Finance Director Sherman: And, that will be the end.

Board Member Lanier: So, we're doing…

Board Member Guyton: Okay.

Board Member Lanier: …that tonight, Chair?

Chairperson Spiritis: Yes.

Board Member Lanier: Okay.

Chairperson Spiritis: But, it'll be up to, actually, Commissioner Guyton, whether he'll be the Chair at that.., at that time.

Board Member Guyton: I'm here.

We.., we need to finish it.

Chairperson Spiritis: Thank you, Director Sherman.

Another question, Commissioner Guyton?

Board Member Guyton: No.

Chairperson Spiritis: Anything else?

That's it? Okay.

Any comments...

Board Member Guyton: The meeting…

Chairperson Spiritis: …Commissioner Guyton?

Board Member Guyton: Yes.

A five minute break and we'll start the next meeting.

Well, Commissioner Davis Panier, any comments?

Board Member Guyton: Oh, oh. I'm sorry.

I'm sorry. I thought you had already ended the…

Chairperson Spiritis: [Inaudible].

Board Member Guyton: Yeah. No, no.

I have no comments. I'm sorry. I thought you were asking about…

Chairperson Spiritis: Okay.

Commissioner Lanier?

Board Member Lanier: No.

Chairperson Spiritis: Any comments?

Commissioner Miller-Anderson?

Board Member Miller-Anderson: No comment.

Chairperson Spiritis: And, I have no comments.

Thank you all for coming.

ADJOURNMENT

Chairperson Spiritis: This meeting is adjourned.

[Gavel]

[End of video/audio]

City Employees, Public Speakers and Others

Assistant City Manager Kevin Copin .....Assistant City Manager Copin

Assistant City Attorney Jason Tracey.....Assistant City Attorney Tracey

Brown and Caldwell Engineer – Nigel Grace.....Mr. N. Grace

Haskell/CDM Smith Joint Venture .....Mr. O. Rodriguez
Omar Rodriguez

Haskell Group Project Manager.....Mr. M. Hoisington
Michael Hoisington

Haskell/CDM Smith – Project Manager .....Ms. S. Mechler
Suzanne Mechler

U.S. Water Services - Senior Project Manager.....Mr. M. Miller
Mike Miller

U.S. Water Services – President and CEO.....Mr. G. Deremer
Gary Deremer

Interim IT Director Ben Sheehan.....Interim IT Director Sheehan

Margaret Shepherd.....Ms. M. Shepherd

Cindy March .....Ms. C. March

Scott Lewis.....Mr. S. Lewis

School Board Member Edwin Ferguson.....School Board Member Ferguson

Charisse Brown Scott.....Ms. C. Brown Scott

Cathy Curry.....Ms. C. Curry

Doretta Paulk.....Ms. D. Paulk

Delores Williams.....Ms. D. Williams

Assistant Director Richard Gallant .....Assistant Director Gallant

Procurement Director LaTonya Ammons.....Procurement Director Ammons

Riviera Beach - Utility Special District

To: Honorable Mayor, Chairperson and Board Members

From: Joshua Niemann, Utility Special District Executive Director

Through: William Wilkins, City Manager

Subject: **Resolution Number 61-26UD: A Resolution of the Board of Directors of the City of Riviera Beach Utility Special District, Palm Beach County, Florida, approving the sole source procurement of SCADA and telemetry system components, software, hardware, and integration services from Badger Meter in an amount not to exceed $50,000.00 from account number 41131103-552000 and 41131104-546000; and authorizing the Utility Special District Finance Director to make payments from account number 41131103-552000 and 41131104-546000 in an amount not to exceed $50,000.00; and providing an effective date.**

Date: November 23, 2026

CC: General Public

Background:

Resolution Number 61-26UD authorizes the City of Riviera Beach Utility Special District to secure a proprietary service and hardware agreement with Badger Meter for Supervisory Control and Data Acquisition (SCADA) and telemetry system components, software, firmware, and advanced integration services. To maintain critical network communications and protect the utility's automated systems, this sole-source designation is legally required because Badger Meter is the exclusive designer, original equipment manufacturer (OEM), and sole authorized distributor of the proprietary TAC IV SCADA framework and its corresponding Telemetry Control Units (TCUs) hardwired across the municipality's utility network.

Maintaining a modern, uninterrupted SCADA and telemetry communication loop is of paramount importance to public health, automated process safety, and immediate emergency

troubleshooting. The TAC IV SCADA system serves as the primary operational backbone of the utility, providing real-time data monitoring and remote command capabilities for all raw water production wells, chemical feed systems, and wastewater lift stations. Securing direct, OEM-supported hardware replacements, communication modules, and authorized system diagnostic integration ensures that facility operators can instantly identify remote equipment failures, prevent lift station overflows, and maintain strict compliance with all Federal, State, and Local environmental laws governing public health and water treatment operations.

City Goals:

The Citywide Goal is to Accelerate Operational Excellence.

Fiscal/Budget Impact:

$50,000.00

Recommendation:

Staff recommends a Motion to approve Resolution Number 61-26UD.

Attachments:

1. Resolution Number 61-26UD.docx
2. Badger Meter Sole Source.pdf
3. Badger Meter Sole Source Letter.pdf

Resolution Number 61-26UD

A Resolution of the Board of Directors of the City of Riviera Beach Utility Special District, Palm Beach County, Florida, approving the sole source preocurement of SCADA and telemetry system components, software, hardware, and integration services from Badger Meter in an amount not to exceed $50,000.00 from account number 41131103-552000 and 41131104-546000; and authorizing the Utility Special District Finance Director to make payments from account number 41131103-552000 and 41131104-546000 in an amount not to exceed $50,000.00; and providing an effective date.

WHEREAS, pursuant to Section 16.5-65 of the City of Riviera Beach Procurement Code, the Utility Special District is authorized to utilize sole-source procurement when there is only one vendor capable of providing the required equipment or services, and Badger Meter is that sole vendor; and

WHEREAS, Badger Meter is the original equipment manufacturer (OEM) and sole source provider for the TAC IV SCADA system, associated Telemetry Control Units, proprietary software, firmware, communication modules, and integration required for the operation of the Utility Special District's water and wastewater facilities; and

WHEREAS, the Utility Special District requires SCADA and telemetry components, software, and integration services necessary for maintenance, repair, and continued operation of the District's water, wastewater, and reuse facilities; and

WHEREAS, the Board authorizes the Utility Special District Finance Director to make payments in an amount not to exceed $50,000.00 to Badger Meter from account number 41131103-552000 and 41131104-546000; and

WHEREAS, this Resolution shall take effect upon approval of the Utility Special District Board.

Now, Therefore, be it resolved by the City of Riviera Beach Utility Special District, Palm Beach County, Florida, as follows:

Section 1. That the Utility Special District Board authorizes the Utility Special District Finance Director to make payments to Badger Meter from operating account 41131103-552000 and 41131104-546000, in an amount not to exceed $50,000.00.

Section 2. The Executive Director of the Utility Special District, or designee, is authorized to execute all documents necessary to carry out the intent of this Resolution.

Section 3. This Resolution shall take effect immediately upon its passage and approval by the Board of Directors of the City of Riviera Beach Utility Special District.

Passed and Adopted this _____ day of _____, 2026.

APPROVED:

_____
Glen Spiritis, Ph.D
Chairperson

_____
Fercella Davis-Panier
Vice-Chairperson

ATTEST:

_____
Debrah Hall
Master Municipal Clerk
Acting District Clerk

MOTIONED BY: _____

SECONDED BY: _____

B. GUYTON: ____

K. MILLER-ANDERSON: ____

S. LANIER: ____

G. SPIRITIS: ____

F. DAVIS-PANIER: ____

Reviewed as to Legal Sufficiency

_____
Dawn S. Wynn, District Attorney

Date: _____

Riviera Beach

SOLE SOURCE/SINGLE SOURCE/EMERGENCY JUSTIFICATION FORM

This form must be used to justify a purchase made from a Sole Source, a Single Source, or in an Emergency situation where competition is not feasible. Sole and Single-source purchases should not be used to bypass established procurement policies and procedures. They should only be considered as an exception when all attempts to pursue competitive procurement practices have failed. **Pricing alone cannot justify a Sole or Single-Source purchase.**

Key Guidelines:

- **Sole Sources are subject to the City of Riviera Beach's policy, audit, and public review.**
  All Sole and Single-Source purchases are subject to compliance with the City's policies and may be reviewed publicly.
- **Vendors are NOT allowed to complete this form on behalf of your department.**
  The form must be completed by the department making the request, not by the vendor.
- **Price is not a determining factor in Sole-Source validity.**
  Sole-Source status cannot be justified based solely on price considerations.
- **The Procurement Department will make the final determination of Sole-Source validity.**
  The Procurement Department will assess whether the purchase qualifies as Sole or Single-source and approve accordingly.
- **Acknowledgment of no personal or financial conflict.**
  By submitting this form, the requester affirms that they have no personal, financial, or fiduciary relationship with the recommended vendor.

FORM MUST BE SUBMITTED TO PROCUREMENT BEFORE THE CREATION OF A PURCHASE REQUISITION. Procurement reserves the right to competitively bid, negotiate, or solicit additional information.

Date: 01/05/26 **Department Name:** Utility District

Supplier Name: Badger Meter **Total Cost:** $ 50,000.00

Description of items(s) and/or service(s):

Provide a detailed description of commodities/services to be provided. For a commodity, explain why only a particular style, model, type or manufacturer is required (i.e. why the commodity is the only commodity that will meet the City's needs). A letter from the Original Equipment Manufacturer is required.

This is needed for troubleshooting, repairs, and replacement of SCADA cards or equipment at the liftstations and raw water wells. This pertains to City-owned equipment manufactured exclusively by this company, which is the sole authorized manufacturer of the equipment

Please select one:

☑ **Sole Source:** A non-competitive method of procurement used when only one supplier possesses the unique ability or capability to meet the particular requirements of the entity or when only one supplier is practicably available.

☐ **Single Source:** A procurement decision whereby purchases are directed to one source because of standardization, warranty, or other factors, even though other competitive sources may be available.

JUSTIFICATION ***(Select all that apply):***

☐ **Only Known Vendor.** List the vendors contacted below and why each source was not feasible.

☑ **Vendor Proprietary Item (OEM).** The selected vendor is the only manufacturer of this item. List the reasons why no substitute item can be used.

The vendor is the sole designer, manufacturer, and authorized distributor of this proprietary system and its associated products.

☐ Continuation of an ongoing service or addition to a critical system already procured from that supplier. (List why it would not be cost-effective and/or schedule-effective and/or technical risk mitigation prudent to procure with another supplier for this procurement).

☐ **Other.** Please explain.

EMERGENCY: Urgent need for the item/service does not permit soliciting competitive bids in cases of emergencies, disasters, etc. Purchases should be made with such competition as is practicable under the circumstances.

Reason(s) for requesting an Emergency Purchase:

☐ An immediate threat exists to public health.

☐ An immediate threat exists to public welfare.

☐ An immediate threat exists to the public's critical economy and efficiency.

☐ An immediate threat to public safety exists.

☐ None of the above applies. (Please attach a detailed explanation and justification for this emergency request)

Date of Incident: _____

Supplier Name: _____ **Total Cost:** $ _____

Provide a detailed explanation of the emergency and how the vendor was selected. Include the number of suppliers solicited and quotes obtained.

State the Reason for the emergency purchase by explaining what the emergency is and what caused the emergency.

State why the needs were not or could not be anticipated so that goods or services could not have been purchased following standard procedures.

State the reason and process used for selecting the vendor (Attach all quotes/proposals received from other sources, if applicable).

By signing this form, I certify that I am not circumventing the competitive bidding process as required by law by using a Sole-Source, Single-Source, or Emergency Contract for commodities or services. To the best of my knowledge, I certify that this request for a Sole-Source, Single-Source, or Emergency Procurement and the information provided herein is accurate and truthful.

Requestor's Signature: Carry Baker II **Date:** 10/2/2026

Department Head Signature: **Date:** 10/2/2026

Director of Procurement Signature: **Date:**

By submitting this form, the requestor and Department Head represent that they have no personal interest in the purchase and that they have read, understood, and attested that this request adheres to Sec. 16.5-66, Sec. 16.5-65, Sec. 16.5-342, and Sec. 16.5-343 of the City of Riviera Beach Code.

Denied. Provide Reason ☐

Sole/Single Source Justification Guidelines

Staff are responsible for providing and certifying as accurate and complete the necessary data to support their recommendation for a Sole-Source, Single-Source, or Emergency Procurement. The justification must clearly demonstrate that only one company can perform the required service or supply the needed commodity.

The following are examples of acceptable explanations for Sole/Single Source Justifications (SSJ):

a) The supplies/services to be acquired are **unique**.
b) Time is of the essence, and only one known source can meet the City's needs within the required timeframe. (**Note:** Administrative delays do not justify urgency for the City.)
c) Data is unavailable for competitive procurement.
d) It is necessary that the item being acquired be **compatible and interchangeable** with existing equipment.

Important Notes:

- **Uniqueness vs. Timeframe**: The two most often cited reasons for a Sole/Single-Source justification are **uniqueness** and **timeframe.** These are often confused and inappropriately interchanged. A discussion of the timeframe is **inappropriate** if the supplier's **uniqueness** is the primary factor and is adequately substantiated. If the basis for the Sole/Single-Source is timeframe, a discussion of uniqueness should not be made or alluded to.
- **Pricing and Capability**: Statements that a supplier has the best capability or offers the lowest price are **NOT** valid reasons for a Sole/Single-Source justification. Such determinations can only be made through full and open competitive processes.
- **Rationale for Qualification**: A rationale that the recommended source is the most highly qualified to perform is **unacceptable** unless it establishes why other sources cannot perform the work.
- **Incumbency**: The fact that a supplier is an incumbent does **NOT** justify a Sole/Single-Source.
- **Administrative Delays**: Administrative delays or a lack of adequate advanced planning resulting in urgency **do not** justify a Sole/Single-Source or Emergency justification.

Badger Meter®

This letter confirms that Badger Meter, Inc. ("Badger Meter") is the sole creator, manufacturer, and marketer of a group of systems and products making up the Data Flow family of products, including the TAC II SCADA System, as well as Remote Terminal Units (RTUs), Telemetry Control Units (TCUs), Hyper SCADA Server (HSS), HyperTAC SCADA Software, and the Symphony Pump & Flow Management® technology. Badger Meter is also the sole source provider for all associated support, repairs, service, and training for each of these solutions.

Badger Meter has nine issued patents globally in its Data Flow product family, including patents governing wastewater collection flow management and techniques, fluid flow management system and associated methods, fluid flow management through a wastewater level manipulation system and associated methods, liquid level determination system and association methods, liquid level determination system, valve malfunctioning detection system for a vacuum sewer and associated methods, Modbus simulation system and associated transfer methods, and liquid-resistant control systems enclosure.

Further, the Data Flow product family is designed and manufactured to provide users with unique qualities and functions for remote monitoring and control for water, wastewater, and stormwater utilities.

Users acquire trend data via the patented and proprietary HT4® software tool which issues "Alarms" and "Alerts" that monitor specific operational parameters. All notifications provide information and resources enabling effective, informed decision-making for corrective or preemptive action. The patented HT4 Mobile® app is designed to have access to the software from the plant, field or office.

The patented Symphony Pump & Flow Management® technology coordinates the system-wide operation of sewer lift stations for the purpose of reducing force main pressures and equalizing flow into a wastewater treatment plant, which enables the ability to significantly reduce energy costs and provide a solution to daily peak-flow issues

Among its portfolio, the Data Flow products are protected by the following US Patents: 8,594,851; 8,600,568; 8,983,667; 9,556,040; 8,340,929; 8,521,452; 8,228,190; 8,260,872 and 9,200,466. We hope this information will satisfy your requirements and that it clearly demonstrates the special, patented, unique and proprietary features of our systems.

Sincerely,

Kim K. Stoll
Vice President – Customer Support and
General Manager – SmartCover

605 John Rodes Blvd. • Melbourne, Florida 32934 • Phone: 321.259.5009

Riviera Beach - Utility Special District

To: Honorable Mayor, Chairperson and Utility Special District Board

From: Joshua Niemann, Utility Special District Executive Director

Through: William Wilkins, City Manager

Subject: **Resolution Number 62-26UD: A Resolution of the Board of Directors of the City of Riviera Beach Utility Special District, Palm Beach County, Florida, approving the purchase of Distribution Water Meters from Water Works Metrology, LLC in an amount not to exceed $290,765.31, using a sole source purchasing method from Project Code 27014, water meter infrastructure upgrades; and authorizing the Utility Special District Finance Director to make payments from Project Code 27014 in an amount not to exceed $290,765.31; and providing an effective date.**

Date: November 23, 2026

CC: General Public

Background:

The Utility Special District has identified a need to obtain several large-diameter meter assemblies and associated components to support the continued operation and accuracy of the City's metering infrastructure. The quotation provided outlines the specific equipment required, including stainless steel meter set modules (SSMs) of various sizes, 10-inch electromagnetic flow meters (HBMAG), and grounding rings. These items are essential for maintaining accurate system metering and replacing aging or failing equipment within the distribution network. The quote also establishes the quantities and pricing associated with these proprietary components. All of the equipment listed is exclusively manufactured by Mueller Systems, and because the manufacturer restricts sales to its single authorized Florida distributor, the City is unable to competitively procure these items from alternative vendors. The proprietary nature of the equipment, compatibility requirements with existing installations, and the exclusive distribution channel necessitate purchasing directly through the

authorized vendor. This ensures the integrity of the metering system, maintains warranty protections, and complies with manufacturer specifications.

City Goals:

The Citywide Goal is to Accelerate Operational Excellence.

Fiscal/Budget Impact:

$290,765.31

Recommendation:

Staff recommends a Motion to approve Resolution Number 62-26UD.

Attachments:

1. Resolution Number 62-26UD.docx
2. Riviera Beach Large Meters.pdf
3. Rivera Beach Sole Source Letter.cleaned.pdf
4. Mueller sole source.pdf

Resolution Number 62-26UD

A Resolution of the Board of Directors of the City of Riviera Beach Utility Special District, Palm Beach County, Florida, approving the purchase of Distribution Water Meters from Water Works Metrology, LLC in an amount not to exceed $290,765.31 from Project Code 27014, water meter infrastructure upgrades; and authorizing the Utility Special District Finance Director to make payments from Project Code 27014 in an amount not to exceed $290,765.31; and providing an effective date.

Whereas, the Utility Special District (District) requests the use of a sole source contract with Water Works Metrology, LLC in accordance with the City of Riviera Beach Procurement; and

Whereas, the District requires replacement water distribution meters as part of its ongoing initiative to transition all meters to an Automated Metering Infrastructure (AMI).; and

Whereas, the District needs to purchase a total of $290,765.31 worth of meters for the distribution system, in line with the AMI intuitive; and

Whereas, the Board authorizes the Utility Special District Finance Director to make payments in an amount not to exceed $290,765.31 to Water Works Metrology, LLC from project code 27014; and

Whereas, this Resolution shall take effect upon approval of the Utility Special District Board.

Now, Therefore, be it resolved by the City of Riviera Beach Utility Special District, Palm Beach County, Florida, as follows:

Section 1. That the Utility Special District Board authorizes the Utility Special District Finance Director to make payments to Water Works Metrology, LLC from project code 27014, in an amount not to exceed $290,765.31.

Section 2. This Resolution shall take effect immediately upon its passage and approval by the City of Riviera Beach Utility Special District Board of Directors.

Passed and Adopted this _____ day of _____, 2026.

APPROVED:

_____
Glen Spiritis, Ph.D
Chairperson

_____
Fercella Davis-Panier
Vice-Chairperson

ATTEST:

_____
Debrah Hall
Master Municipal Clerk
District Clerk

MOTIONED BY: _____

SECONDED BY: _____

B. GUYTON: ____

K. MILLER-ANDERSON: ____

S. LANIER: ____

G. SPIRITIS: ____

F. DAVIS-PANIER: ____

Reviewed as to Legal Sufficiency

_____
Dawn S. Wynn, District Attorney

Date: _____

WATER WORKS METROLOGY, LLC

Prepared for: rivierabeach.org
Re: Riviera Beach Large Meters

Attn: Maurice Spence
Quote #: 20260928-165515826

September 28, 2026

This quote represents our interpretation of the plans & specifications and is offered as an aid to bidding only. Customers should verify all materials & quantities before bidding or ordering.

Special order material & other non-stock items may be non-returnable or subject to cancellation charge. They must be shipped to the customer within 30 days of receipt by our company.

Prices are effective if:
Ordered by:
Shipped by:

All material is subject to price change to reflect any price increases from our manufacturers, especially due to force majeure.

Our company is not responsible for delivery delays, cancellations or price increases resulting from any cause beyond our control. These include, but are not limited to: manufacturers' shortages, availability, or timeliness of transportation, materials, fuels or supplies.

This quote is not a contract to supply material or guarantee of product availability.

_____ _____

Print Name Date

_____

Signature

WATER WORKS
METROLOGY, LLC

Quotation

1425 Rock Quarry Rd, Ste 106
Raleigh, NC 27610
515-351-2489
bhenson@waterworksmetrology.com

Date: September 28, 2026
Order by :
Ship by :
Prepared by: Brandon Henson
Quote #: 20260928-165515826

Prepared for:
rivierabeach.org
ATTN: Maurice Spence
RE: Riviera Beach Large Meters

Quantity	Description	Part #	Unit Price	Ext Price
4	3X12" SSM W/25' NICOR	E5200EN	$4,256.47	$17,025.88
7	4X14" SSM W/25' NICOR	E5300EN	$5,665.44	$39,658.08
5	6X18" SSM W/25' NICOR	E5400EN	$8,739.56	$43,697.80
9	8X20" SSM W/25' NICOR	E5500EN	$12,227.50	$110,047.50
5	10"HBMAG,FM,SG,INT,R4D,25'NIC	M0102F125	$15,884.91	$79,424.55
10	10" HBMAG GROUNDING RING	HBRING10	$91.15	$911.50
	Grand Total			$290,765.31

Mueller Systems
10210 Statesville Blvd
Cleveland, NC 28037

phone: 704-278-2221
fax: 704-278-9616
muellersystems.com

October 6, 2026

City of Riveria Beach
Attn: Joshua Niemann
600 W. Blue Heron Blvd.
Riveria Beach, FL 33404

Re: Sole Source Letter for Mueller Metrology

Mr Niemann,

Mueller Systems is the original and only manufacturer for all Hersey Meters, Mueller Systems, or Mueller metrology brand water meters, check valves, equipment, registers, meter reading systems, or any other associated "parts" for these devices. Please note that only parts manufactured by Mueller should be used in the repair of meters, valves, and other products manufactured by Mueller.

Mueller markets our metrology products through Water Works Inc, our sole authorized distributor for these products in the State of Florida.

As always, we appreciate your business and look forward to assisting you in any way possible.

Sincerely,

Rossie Manning
Regional Sales Manager
East Region Technologies
910-945-9559 - Mobile
rmanning@muellerwp.com

Riviera Beach

SOLE SOURCE/SINGLE SOURCE/EMERGENCY JUSTIFICATION FORM

This form must be used to justify a purchase made from a Sole Source, a Single Source, or in an Emergency situation where competition is not feasible. Sole and Single-source purchases should not be used to bypass established procurement policies and procedures. They should only be considered as an exception when all attempts to pursue competitive procurement practices have failed. **Pricing alone cannot justify a Sole or Single-Source purchase.**

Key Guidelines:

- **Sole Sources are subject to the City of Riviera Beach's policy, audit, and public review.**
  All Sole and Single-Source purchases are subject to compliance with the City's policies and may be reviewed publicly.
- **Vendors are NOT allowed to complete this form on behalf of your department.**
  The form must be completed by the department making the request, not by the vendor.
- **Price is not a determining factor in Sole-Source validity.**
  Sole-Source status cannot be justified based solely on price considerations.
- **The Procurement Department will make the final determination of Sole-Source validity.**
  The Procurement Department will assess whether the purchase qualifies as Sole or Single-source and approve accordingly.
- **Acknowledgment of no personal or financial conflict.**
  By submitting this form, the requester affirms that they have no personal, financial, or fiduciary relationship with the recommended vendor.

FORM MUST BE SUBMITTED TO PROCUREMENT BEFORE THE CREATION OF A PURCHASE REQUISITION. Procurement reserves the right to competitively bid, negotiate, or solicit additional information.

Date: 10/06/26 **Department Name:** Utility District

Supplier Name: Mueller Systems **Total Cost:** $ 290,765.31

Description of items(s) and/or service(s):
Provide a detailed description of commodities/services to be provided. For a commodity, explain why only a particular style, model, type or manufacturer is required (i.e. why the commodity is the only commodity that will meet the City's needs). A letter from the Original Equipment Manufacturer is required.

Mueller Systems is identified as the sole manufacturer and sole source provider for all Hersey Meters, Mueller Systems, and Mueller Metrology brand water meters, check valves, equipment, registers, meter reading systems, and related parts. Only Mueller-manufactured components are authorized for repairs or replacements involving these products. Distribution within Florida is exclusively handled by Water Works Inc.

Please select one:

☑ **Sole Source:** A non-competitive method of procurement used when only one supplier possesses the unique ability or capability to meet the particular requirements of the entity or when only one supplier is practicably available.

☐ **Single Source:** A procurement decision whereby purchases are directed to one source because of standardization, warranty, or other factors, even though other competitive sources may be available.

JUSTIFICATION ***(Select all that apply):***

☐ **Only Known Vendor.** List the vendors contacted below and why each source was not feasible.

Mueller Systems is the only known manufacturer of the equipment required for compatibility with existing City meter infrastructure. The meter assemblies and components in the quote are proprietary and must be supplied by the authorized distributor to maintain system compatibility, warranty, and operational integrity.

☐ **Vendor Proprietary Item (OEM).** The selected vendor is the only manufacturer of this item. List the reasons why no substitute item can be used.

☐ Continuation of an ongoing service or addition to a critical system already procured from that supplier. (List why it would not be cost-effective and/or schedule-effective and/or technical risk mitigation prudent to procure with another supplier for this procurement).

☐ **Other.** Please explain.

EMERGENCY: Urgent need for the item/service does not permit soliciting competitive bids in cases of emergencies, disasters, etc. Purchases should be made with such competition as is practicable under the circumstances.

Reason(s) for requesting an Emergency Purchase:

☐ An immediate threat exists to public health.

☐ An immediate threat exists to public welfare.

☐ An immediate threat exists to the public's critical economy and efficiency.

☐ An immediate threat to public safety exists.

☐ None of the above applies. (Please attach a detailed explanation and justification for this emergency request)

Date of Incident: _____

Supplier Name: _____ **Total Cost:** $ _____

Provide a detailed explanation of the emergency and how the vendor was selected. Include the number of suppliers solicited and quotes obtained.

State the Reason for the emergency purchase by explaining what the emergency is and what caused the emergency.

State why the needs were not or could not be anticipated so that goods or services could not have been purchased following standard procedures.

The City's existing large-meter infrastructure relies on proprietary Mueller Systems metrology components, and the need for replacements or upgrades arises only when meters fail, reach end-of-life, or require immediate service to maintain system reliability. These failures occur unpredictably and are not tied to routine maintenance cycles.

State the reason and process used for selecting the vendor (Attach all quotes/proposals received from other sources, if applicable).

The selection process consisted of verifying the manufacturer's distribution restrictions and confirming that the required large-diameter meters and assemblies listed in the Riviera Beach quotation are proprietary Mueller products, which must be sourced through the authorized distributor to maintain compatibility with existing infrastructure and to comply with warranty and performance requirements. Because no alternative manufacturers produce equivalent components that integrate with the City's installed metering system, it was determined that Water Works Inc. is the only known vendor capable of supplying the required goods

By signing this form, I certify that I am not circumventing the competitive bidding process as required by law by using a Sole-Source, Single-Source, or Emergency Contract for commodities or services. To the best of my knowledge, I certify that this request for a Sole-Source, Single-Source, or Emergency Procurement and the information provided herein is accurate and truthful.

Requestor's Signature: Garrys Babcock II **Date:** 10/6/26

Department Head Signature: **Date:** 10/6/2026

Director of Procurement Signature: **Date:**

By submitting this form, the requestor and Department Head represent that they have no personal interest in the purchase and that they have read, understood, and attested that this request adheres to Sec. 16.5-66, Sec. 16.5-65, Sec. 16.5-342, and Sec. 16.5-343 of the City of Riviera Beach Code.

Denied. Provide Reason ☐ _____

Sole/Single Source Justification Guidelines

Staff are responsible for providing and certifying as accurate and complete the necessary data to support their recommendation for a Sole-Source, Single-Source, or Emergency Procurement. The justification must clearly demonstrate that only one company can perform the required service or supply the needed commodity.

The following are examples of acceptable explanations for Sole/Single Source Justifications (SSJ):

a) The supplies/services to be acquired are **unique**.
b) Time is of the essence, and only one known source can meet the City's needs within the required timeframe. (**Note:** Administrative delays do not justify urgency for the City.)
c) Data is unavailable for competitive procurement.
d) It is necessary that the item being acquired be **compatible and interchangeable** with existing equipment.

Important Notes:

- **Uniqueness vs. Timeframe**: The two most often cited reasons for a Sole/Single-Source justification are **uniqueness** and **timeframe**. These are often confused and inappropriately interchanged. A discussion of the timeframe is **inappropriate** if the supplier's **uniqueness** is the primary factor and is adequately substantiated. If the basis for the Sole/Single-Source is timeframe, a discussion of uniqueness should not be made or alluded to.
- **Pricing and Capability**: Statements that a supplier has the best capability or offers the lowest price are **NOT** valid reasons for a Sole/Single-Source justification. Such determinations can only be made through full and open competitive processes.
- **Rationale for Qualification**: A rationale that the recommended source is the most highly qualified to perform is **unacceptable** unless it establishes why other sources cannot perform the work.
- **Incumbency**: The fact that a supplier is an incumbent does **NOT** justify a Sole/Single-Source.
- **Administrative Delays**: Administrative delays or a lack of adequate advanced planning resulting in urgency **do not** justify a Sole/Single-Source or Emergency justification.

Riviera Beach - Utility Special District

To: Honorable Mayor, Chairperson and Board Members

From: Joshua Niemann, Utility Special District Executive Director

Through: William Wilkins, City Manager

Subject: **Resolution Number 51-26UD: A Resolution of the Board of Directors of the City of Riviera Beach Utility Special District, Palm Beach County, Florida, approving the purchase of carbon dioxide from Airgas USA, LLC pursuant to the Southeast Florida Governmental Purchasing Cooperative Group cooperative agreement, ITB26-036, Carbon Dioxide Liquid Bulk Delivery, in an amount not to exceed $120,000.00 from the Water Treatment operating Account Number 41131103-552000, Chemicals for the Water Treatment Plant; authorizing the Utility Special District Finance Director to make payments from the Water Treatment operating Account Number 41131103-552000 in an amount not to exceed $120,000.00; and providing an effective date.**

Date: November 23, 2026

CC: General Public

Background:

This purchase is critical to support day-to-day water treatment operations and ensure that the facility remains in strict compliance with all Federal, State, and Local environmental laws governing the production of safe drinking water. Through this piggyback contract with the City of Pompano Beach, the District secures a competitively awarded source of bulk liquid carbon dioxide from Airgas USA, LLC, providing a reliable supply of treatment chemicals necessary for maintaining water quality and regulatory compliance.

Upon approval by the Board of Directors, the Utility Special District Finance Director will be authorized to make direct payments to Airgas USA, LLC for carbon dioxide deliveries as they

are received, ensuring uninterrupted operation of the Water Treatment Plant and continuity of essential treatment processes.

Carbon dioxide is a critical treatment chemical used to control pH levels throughout the water treatment process, helping to stabilize finished water quality, optimize treatment efficiency, and protect distribution system infrastructure from scaling and corrosion. Maintaining an adequate supply of high-purity carbon dioxide is essential to meeting operational treatment objectives and ensuring compliance with drinking water regulations. The awarded product meets stringent drinking water treatment standards, including certification under NSF/ANSI/CAN Standard 60 and compliance with applicable Florida regulatory requirements for chemicals used in potable water treatment.

City Goals:

The Citywide Goal is to Accelerate Operational Excellence.

Fiscal/Budget Impact:

$100,000.00

Recommendation:

Staff recommends a Motion to approve Resolution Number 51-26UD.

Attachments:

1. Resolution Number 51-26UD CO2.docx
2. COOP agreement.pdf
3. American Air Liquide Holdings Inc - City of Riviera Beach - 26101637939520 - 26101637939520- 570123815928.pdf

Resolution Number 51-26UD

A Resolution of the Board of Directors of the City of Riviera Beach Utility Special District, Palm Beach County, Florida, approving the purchase of carbon dioxide from Airgas USA, LLC pursuant to the Southeast Florida Governmental Purchasing Cooperative Group cooperative agreement, ITB26-036, Carbon Dioxide Liquid Bulk Delivery, in an amount not to exceed $120,000.00 from the Water Treatment operating Account Number 41131103-552000, Chemicals for the Water Treatment Plant; authorizing the Utility Special District Finance Director to make payments from the Water Treatment operating Account Number 41131103-552000 in an amount not to exceed $120,000.00; and providing an effective date.

Whereas, the City of Pompano Beach, as lead agency for the Southeast Florida Governmental Purchasing Cooperative Group (SEFL NIGP Cooperative), competitively solicited Invitation to Bid ITB26-036, Carbon Dioxide Liquid Bulk Delivery, on behalf of the City of Pompano Beach and participating governmental agencies in Miami-Dade, Broward, and Palm Beach Counties; and

Whereas, on June 23, 2026, the City of Pompano Beach awarded ITB26-036 to Airgas USA, LLC (Airgas, Inc.) as the lowest responsive and responsible bidder, for an initial term of June 23, 2026, through June 22, 2029, with one (1) additional two-year renewal option; and

Whereas, in its bid, Airgas USA, LLC agreed to extend the same pricing, terms, and conditions of ITB26-036 to other governmental entities participating in the SEFL NIGP Cooperative, at an all-inclusive delivered price of $590.00 per ton ($0.295 per pound), which shall remain fixed for no less than thirty-six (36) months; and

Whereas, the Utility Special District (District), as a governmental entity participating in the SEFL NIGP Cooperative, will purchase carbon dioxide directly from Airgas USA, LLC pursuant to the cooperative agreement established under ITB26-036; and

Whereas, the District requires carbon dioxide for pH control at the Water Treatment Plant and to ensure compliance with all federal, state, and local water treatment requirements; and

Whereas, the District requires funding in the amount of $120,000.00 for the purchase of carbon dioxide for the current fiscal year; and

Whereas, the Board authorizes the Utility Special District Finance Director to make payments in an amount not to exceed $120,000.00 to Airgas USA, LLC from Account Number 41131103-552000; and

Whereas, this Resolution shall take effect upon approval of the Utility Special District Board.

Now, Therefore, be it resolved by the City of Riviera Beach Utility Special District, Palm Beach County, Florida, as follows:

Section 1. That the Utility Special District Board approves the purchase of carbon dioxide from Airgas USA, LLC pursuant to the SEFL NIGP Cooperative agreement, ITB26-036, and authorizes the Utility Special District Finance Director to make payments to Airgas USA, LLC from operating Account Number 41131103-552000 in an amount not to exceed $120,000.00.

Section 2. The Executive Director of the Utility Special District, or designee, is authorized to execute all documents necessary to carry out the intent of this Resolution.

Section 3. This Resolution shall take effect immediately upon its passage and approval by the City of Riviera Beach Utility Special District Board of Directors.

Passed and Adopted this _____ day of _____, 2026.

APPROVED:

_____
Glen Spiritis, Ph.D
Chairperson

_____
Fercella Davis-Panier
Vice-Chairperson

ATTEST:

_____
Debrah Hall
Master Municipal Clerk
District Clerk

MOTIONED BY: _____

SECONDED BY: _____

B. GUYTON: ____

K. MILLER-ANDERSON: ____

S. LANIER: ____

G. SPIRITIS: ____

F. DAVIS-PANIER:

Reviewed as to Legal Sufficiency

_____
Dawn S. Wynn, District Attorney

Date: _____

Southeast Florida Governmental Purchasing Cooperative Group

CONTRACT AWARD

Please complete each of the applicable boxes and submit with bid documents, award notices and tabulations to coop@nigpsefl.org for placement on the NIGP SEFL website Cooperative contract page.

BID/RFP No. ITB26-036

Description/Title: Carbon Dioxide Liquid Bulk Delivery

Initial Contract Term: Start Date: 6/23/2026 End Date: 6/22/2029

Renewal Terms of the Contract: an additional two (2) year period (No. of Renewals) Renewal Options for 1 (Period of Time)

Renewal No. ___ Start Date: _____ End Date: _____

Renewal No. ___ Start Date: _____ End Date: _____

Renewal No. ___ Start Date: _____ End Date: _____

Renewal No. ___ Start Date: _____ End Date: _____

Extension / Renewal Note: _____

SECTION #1 VENDOR AWARD

Vendor Name: Airgas USA lLC (Airgas, Inc.)

Vendor Address: 259 N. Radnor-Chester Road, Suite 300, Radnor, PA 19087-5283

Contact: Katey Shartzer

Phone: (813)222-8881 Fax: _____

Cell/Pager: (484-523-0402 Email Address: Katey.shartzer@airgas.com

Website: _____ FEIN: 45-3153734

SECTION #2 AWARD/BACKGROUND INFORMATION

Award Date: 6/23/2026 Resolution/Agenda Item No.: 26-412

Insurance Required: Yes X No _____

Performance Bond Required: Yes _____ No X

SECTION #3 LEAD AGENCY

Agency Name: City of Pompano Beach

Agency Address: 100 West Atlantic Blvd, Pompano Beach, FL 33060

Agency Contact: Michael Lee Email michael.lee@copbfl.com

Telephone: 954-786-5503 Fax: _____

M E M O R A N D U M

June 11, 2026

To: Gregory P. Harrison, City Manager

Through: Mary Rivero, Procurement and Contracts Director

From: Michael Lee, Purchasing Agent

Subject: Award Bid ITB26-036 Carbon Dioxide, Liquid, Bulk Delivery (Co-operative Bid)

Contract Need/Background

Invitation to Bid (ITB) ITB26-036 was issued to establish an annual, open-ended contract for the purchase of carbon dioxide, to be ordered as needed. The City of Pompano Beach's Utilities Department requires carbon dioxide on an ongoing basis for use in the water treatment plant. The City of Pompano Beach (City) issued this cooperative solicitation, serving as the lead agency for the forty-five (45) participating members of the Southeast Florida Governmental Purchasing Cooperative Group. The estimated quantities stated in the bid solicitation include anticipated requirements from all of the participating agencies, including the City.

Attached you will find copies of the "Bid Award Recommendation" form submitted by the Utilities Department, the bid tabulation, emails clarifying pricing, and other procurement documents. The Utilities Department recommends the award to Airgas USA, LLC.

Bidders List

The Bidders List was created by using companies suggested by the requesting department, companies that have responded to prior solicitations, companies that have requested their names be placed on the Bidders List, and companies from appropriate listings in other source books.

Number of companies responding with complete bids.....2

Advertising

The ITB was advertised in the Sun Sentinel, and notices were sent to bid notice agencies nationwide. The ITB was also posted on the City's webpage for download by interested companies/firms.

Funding

No warranty or guarantee is given or implied as to the total amount to be purchased as a result of this contract. The quantities provided in this Invitation for Bids are estimates of annual usage for bid comparison only. Quantities may be expressed in varying units depending on the participating agency's operational requirements. Carbon Dioxide will be ordered as needed. City purchases will be made, as needed, from budgeted funds in account 412-3320-533.52-05, Operating Supplies / Chemicals / Horticultural.

Award Recommendation

It is recommended that an initial three-year award be made to the lowest responsive and responsible bidder, Airgas USA, LLC, with the possibility of an additional two-year renewal, subject to the terms and conditions contained in the procurement documents.

enclosures

cc: file

City of Pompano Beach
UTILITIES ADMINISTRATION
Phone: (954) 545-7073 Fax: (954) 545-7046

MEMORANDUM No. 26-61

DATE: June 11th, 2026

TO: Gregory P. Harrison, City Manager

VIA: Brian Donovan, Assistant City Manager

FROM: Renuka Mohammed, Utilities Director

CC: Phil Hyer, Utilities Water and Reuse Treatment Plant Superintendent
Mondy Claude, Utilities Business Operations Analyst

SUBJECT: Carbon Dioxide Liquid Bulk Delivery

Purpose
To obtain City Commission approval to award ITB26-036 - Carbon Dioxide Liquid Bulk Delivery, to Airgas USA, LLC (Airgas, Inc.) for the purchase and delivery of bulk liquid carbon dioxide for the City of Pompano Beach and participating cooperative agencies.

Background
The City issued ITB26-036 on April 16, 2026, for the purchase and delivery of bulk liquid carbon dioxide on an as-needed basis. The City of Pompano Beach served as the lead agency for the Southeast Florida Chapter of the National Institute of Governmental Purchasing (SEFL NIGP) Cooperative solicitation, which included requirements for the City and participating agencies in Miami-Dade, Broward, and Palm Beach.

The solicitation closed on May 18, 2026, and the City received two (2) bids in response to the solicitation:

- Airgas USA, LLC (Airgas, Inc.)
- Broward Nelson Fountain Service

The Procurement and Contracts Department, in conjunction with the Utilities Department, reviewed both submissions and, in accordance with Section 4.2.3 of the Invitation to Bid, Airgas USA, LLC (Airgas, Inc.) was the lowest responsive and responsible bidder and provided documentation meeting all requirements of the ITB.

Fiscal Impact
Estimated annual carbon dioxide expenditures are approximately $220,000 and will be funded through the Utilities Department operating budget. Actual expenditures will vary based on potable water production and treatment demand.

Supports Strategic Goals, Objectives, Policies
Strategic Plan: Goal 4 (Item 6)**:** Superior Capacity for Growth through Quality, Sustainable Development - Expand and enhance utility infrastructure - water, wastewater, and stormwater.

Comprehensive Plan: Goal 7A: Provide safe, reliable, sustainable, cost-effective potable water to all residents and businesses within the City's water utility service areas and make the capital improvements necessary to maintain or improve potable water services.

Recommendation
The Utilities Department recommends that the City Commission approve the award of ITB26-036, Carbon Dioxide Liquid Bulk Delivery, to Airgas USA, LLC (Airgas, Inc.) as the lowest responsive and responsible bidder. The initial contract period is for three years with an additional two-year renewal period, subject to the terms and conditions of the contract. The contract will provide for the continued supply of bulk liquid carbon dioxide necessary for water treatment operations and support the City's ongoing commitment to reliable utility service delivery.

Applicable Attachments
- ITB26-036 Carbon Dioxide, Liquid, Bulk Delivery (Co-operative Bid)
- Recommendation Tabulation / Bid Award Recommendation

Procurement & Contracts Department
Mary Rivero, Director
mary.rivero@copbfl.com

ITB #:	ITB26-036	Tentative City Commission Meeting Date*:	TBD		
ITB Title:	SEFL NIGP Cooperative Purchase – Carbon Dioxide Liquid Bulk Delivery	# Notified:	356	# Downloaded:	3
		# of Responses Rec'd:	2	# of "No Bids":	0
For:	Utilities Department (Department)	ITB Opening Date:	05/18/2026		

POSTING OF ITB RECOMMENDATION/TABULATION: ITB Recommendations and Tabulations will be posted in the eBid System, IonWave, and will remain posted for 72 hours. Any person who may be adversely affected by the decision or intended decision shall file a notice of protest in writing within 72 hours of posting the notice of the decision or intended decision. The formal written protest shall be filed within ten (10) days after the date the notice of protest is filed. Failure to file a notice of protest or a formal written protest shall constitute a waiver of proceedings under this chapter. Section 120.57(3)(b), Florida Statutes, states that "The formal written protest shall state with particularity the facts and law upon which the protest is based." Saturdays, Sundays, state holidays, and days when the City is closed shall be excluded from the computation of the 72-hour time period provided. Filings shall be at the office of the Director of Procurement and Contracts, 1101 NE 5th Avenue, Pompano Beach, FL 33060. Any person who files an action protesting an intended decision shall post with the City, at the time of filing the formal written protest, a protest bond, payable to the City of Pompano Beach, Florida, in an amount equal to one percent (1%) of the estimated value of the contract. Failure to submit the protest bond within the time allowed for filing a bond shall constitute a waiver of the right to protest. Failure to file a protest within the time prescribed in Section 120.57(3), Florida Statutes, or failure to post the protest bond or other security required by law within the time allowed for filing a bond shall constitute a waiver of proceedings under Chapter 120, Florida Statutes.

(*) The "Cone of Silence" shall terminate upon the City's award or approval of a contract, rejection of all Proposals or responses, or any other formal action that concludes the solicitation or other procurement process. For confirmation of the official termination date of the Cone of Silence, contact the Purchasing Agent of record.

RECOMMENDATION TABULATION

The City of Pompano Beach, Florida, received two (2) bids in response to ITB26-036 SEFL NIGP Cooperative Purchase – Carbon Dioxide Liquid Bulk Delivery.

Bidder	Response Total
Airgas USA, LLC (Airgas, Inc.)	$2,360,000.00
Broward Nelson Fountain Service	$5,520,000.00

Pursuant to Section **4.2.3** of the Invitation to Bid, the award shall be made to the lowest responsive and responsible bidder.

Responsiveness Review:
In accordance with Section 6.1 of the ITB, Procurement and Contracts evaluated the responsiveness of the two bids received. Both bids were deemed responsive.

Recommendation
Airgas USA, LLC (Airgas, Inc.) submitted the lowest responsive and responsible bid and provided documentation meeting all requirements of the ITB. Therefore, it is recommended to bring to the commission **Airgas USA, LLC (Airgas, Inc)** for the award.

Procurement & Contracts Department
Mary Rivero, Director
mary.rivero@copbfl.com

By: Michael Lee Dated: June 9, 2026
(Purchasing Agent)

Florida's Warmest Welcome

SEFL NIGP Cooperative Purchase

ITB26-036 – Carbon Dioxide Liquid Bulk Delivery

SEFL NIGP Cooperative Purchase – Carbon Dioxide Liquid Bulk Delivery

ITB Opening: May 18, 2026, at 2:00 PM

Virtual Zoom Meeting
For Access, Go To:
https://www.pompanobeachfl.gov/meetings

April 16, 2026

Dear Prospective Bidders,

SUBJECT: Invitation To Bids (ITB) ITB26-036 - Carbon Dioxide Liquid Bulk Delivery

The City of Pompano Beach (the “City”) is interested in receiving Bids in response to the attached ITB for the Carbon Dioxide Liquid Bulk Delivery.

Bidders must be registered on the City’s eBid System to view the solicitation documents and respond to this solicitation. The complete solicitation document can be downloaded free of charge from the eBid System at https://pompanobeachfl.ionwave.net/. Bids must bear the electronic signature of an authorized officer of the Bidder who is legally authorized to enter into a contractual relationship in the Bidder's name. THE CITY will consider the submittal of a Bid as constituting an offer by the Bidder to perform the required services at the prices stated herein. The City is not responsible for the accuracy or completeness of any documentation the Bidder receives from any source other than the eBid System. The Bidder is solely responsible for downloading all required documents. Responses will be electronically unsealed in a public forum and read aloud.

Bids must be submitted electronically at (https://pompanobeachfl.ionwave.net), referred to hereinafter as the eBid System, on or before the date and time stated in **Section 1 —Schedule of Events. Bids received after 2:00:00 p.m. ET on the due date will not be considered, and late Bids will not be accepted**.

Cone of Silence shall take effect once this solicitation is released to the General Public and shall remain in effect until the City Commission has taken final action to approve or reject an award, or otherwise terminate the solicitation. During the Cone of Silence period, Respondents to this solicitation, or persons acting on their behalf, including lobbyists, shall not communicate, directly or indirectly, regarding any aspect of this solicitation with any member of the City Commission, the City Clerk, the City Manager’s Office, any Evaluation Committee member, or any other City of Pompano Beach employee, except in writing to the Procurement and Contracts Department staff as expressly permitted in this solicitation. Violation of the Cone of Silence may be grounds for rejection of a Proposal or other appropriate action as permitted by City ordinance.

All communications must go through the eBid System (IonWave) or the Purchasing Agent assigned to this solicitation, Eric Seifer, at (954)786-4166, or eric.seifer@copbfl.com. Any information that amends any portion of this solicitation received by any method other than an Addendum issued through IonWave is not binding on the City of Pompano Beach.

Carefully read all portions of the ITB document to ensure the Bidder's Bid fully complies with all requirements.

Table of Contents

1. SCHEDULE OF EVENTS....4
2. PROJECT OVERVIEW AND SCOPE OF SERVICES....5
3. SUBMITTAL INSTRUCTIONS AND REQUIREMENTS....7
4. CONTRACT TERMS AND CONDITIONS....8
5. PARTICIPATING AGENCIES/CONTACT PERSONS/DELIVERY LOCATIONS/SPECIAL REQUIREMENTS....11
6. AWARD AND RESERVATION OF RIGHTS....15
7. INSURANCE REQUIREMENTS....17
8. STANDARD PROVISIONS....18
9. ADDENDA....24

1. SCHEDULE OF EVENTS

ITB Number:	**ITB26-036**
ITB Title:	**Carbon Dioxide Liquid Bulk Delivery**
Release Date:	**April 16, 2026**
Date Published In Sun-Sentinel	**April 16, 2026**
Written Questions And Inquiries Are Due On Or Before:	**May 7, 2026, at 5:00 PM**
ITB Responses Due Date/Time:	**May 18, 2026, at 2:00 PM**
Recommendation For Award:	**TBD**
Direct All Inquiries To:	**https://pompanobeachfl.ionwave.net**
E-Bids Submittals Only:	**https://pompanobeachfl.ionwave.net**
Bids Virtual Opening:	**https://www.pompanobeachfl.gov/meetings**

2. PROJECT OVERVIEW AND SCOPE OF SERVICES

2.1. Background

The intent of this Invitation for Bids is to establish annual, open-ended contracts for the purchase of bulk liquid carbon dioxide, delivered as and when needed by the City and any participating agency of the cooperative.

The City of Pompano Beach is acting as the lead agency for the Cooperative, and this ITB includes the requirements of both the City and the participating agencies named herein. Any reference to a single agency or location will, in fact, be understood as referring to all participating agencies referenced in the documents unless specifically noted otherwise.

2.2. Scope of Services and Technical Requirements

1. Carbon Dioxide (CO_2), liquid, minimum 99.5% purity.
2. Product must comply with Florida Administrative Code 62-555.320(3)(b) and be certified to NSF/ANSI/CAN Standard 60 (latest edition) for use in drinking water treatment.
3. Type of delivery: Bulk (pumped).
4. Vendor shall provide certified weight tickets or equivalent delivery documentation, including gross, tare, and net weights (or metered delivery verification), with each invoice.
5. No demurrage, unloading, standby, wait time, or any similar charges shall be assessed under any circumstance, including but not limited to Vendor-related delays, equipment issues, or delivery conditions.
6. Vendor must be capable of meeting routine and emergency delivery requirements. Delivery shall be made within 48 hours of order placement, unless otherwise specified or approved by the participating agency. The Contractor shall coordinate delivery schedules, locations, and quantities directly with the authorized representative of each participating agency and shall not ship product without such authorization.
   The Contractor shall ensure timely and accurate deliveries and shall provide appropriate equipment and qualified personnel to safely offload product at each delivery location. Any delivery not conforming to these requirements may be rejected by the City or participating agency, and the Contractor shall be responsible for redelivery at no additional cost.
7. Vendor shall comply with all applicable OSHA and safety regulations for transportation, handling, and delivery of liquid carbon dioxide.
8. Vendor shall provide, upon request, certification of compliance and product analysis demonstrating conformity with required standards.
9. Vendor shall provide Safety Data Sheets (SDS) with all deliveries in compliance with Florida Statutes Chapter 442. All substances shall be properly labeled in accordance with OSHA standards.

2.3. Compatibility with Existing Equipment

The Contractor shall utilize the City's and participating agencies' existing storage tanks, connections, and related infrastructure as-is. The Contractor shall not require, mandate, or condition performance on any modifications, upgrades, or replacement of existing equipment. Any minor fittings, adapters, or accessories necessary to ensure compatibility with existing systems shall be provided by the Contractor at no additional cost to the City.

The Contractor's failure to accommodate existing infrastructure shall not be grounds for additional charges, delays, or non-performance.

The Contractor acknowledges that it has reviewed the existing equipment specifications prior to Bid submittal and agrees that any incompatibility shall not be grounds for additional cost, a change order, or refusal to perform.

2.4. Emergency and After-Hours Delivery

The Contractor shall be capable of providing emergency, expedited, after-hours, weekend, and holiday deliveries upon request by the City or participating agency.

Emergency delivery is defined as any delivery requested outside of standard delivery scheduling or required within a timeframe shorter than the Contractor's normal delivery window as defined in the Bid. Such deliveries shall be performed only upon request and authorization by the City or a participating agency. The Contractor shall not independently initiate emergency deliveries or apply associated charges without prior approval.

2.5. Telemetry Equipment and Monitoring Costs

The Contractor shall not charge the City or any participating agency for any telemetry equipment, remote monitoring devices, communication hardware, software, installation, maintenance, or related services required to monitor product levels, usage, or system performance.

Any such equipment or services shall be provided at no additional cost and shall be fully included in the unit pricing submitted. No separate compensation shall be allowed under any circumstance.

2.6. Questions and Communication

http://www.pompanobeachfl.ionwave.net is the official method used by the Procurement and Contracts Department, which has approved the distribution and communication of all competitive solicitations. All questions regarding this ITB must be submitted using the Questions feature in the eBid System on or before **May 7, 2026, at 5:00 PM** via http://www.pompanobeachfl.ionwave.net/. Questions received after this date and time will not be answered. Questions submitted by Bidders will be answered through the IonWave Questions feature or via Addenda, if necessary. Any verbal or written information obtained from sources other than the information included in this ITB document or by an Addendum shall not be binding on the City.

2.7. Bids Submittal Due Date

The City will receive sealed Bids by **May 18, 2026, at 2:00 PM.** Bids must be submitted electronically through the eBid System on or before the due date/time stated above. Any Bids received after the due date will not be considered.

3. SUBMITTAL INSTRUCTIONS AND REQUIREMENTS

3.1. Submission Format Requirements

Bids must be submitted electronically through the eBid System (https://pompanobeachfl.ionwave.net) on or before the date and time stated in Section 1-Schedule of Events. Please follow all the steps and requirements to submit Bids at http://www.pompanobeachfl.ionwave.net/. Submissions must include all documents, requirements, and attachments advertised on the website, as listed in the Attributes tab and the Response Attachments tab of the eBid System.

The City will not be responsible for delays caused by technical or other issues. It is the sole responsibility of the Bidder to ensure that their Bid is successfully submitted to the eBid System before the established Bid submission deadline. The City reserves the right to reject and not consider any Bids that are not submitted according to the requirements established herein.

3.2. Bidder's Responsibilities

Before submitting a response, the Bidder shall be solely responsible for conducting any necessary investigations, evaluations, and examinations to ascertain all conditions and requirements affecting full performance of the Contract, including thoroughly examining the ITB Documents, visiting the site to become familiar with local conditions that may affect costs, progress, performance, or furnishing of the work, considering all applicable federal, state, and local laws and regulations, carefully correlating the Bidder's observations with the ITB Documents, and notifying the City of any conflicts, errors, or discrepancies in the ITB Documents; ignorance of such conditions and requirements, and/or failure to make such evaluations, investigations, and examinations, will not relieve the Bidder from any obligation to comply with every detail and with all provisions and requirements of the Contract and will not be accepted as a basis for any subsequent claim for monetary consideration, and the Bidder acknowledges that any information and data reflected in the ITB Documents concerning or contiguous to the site is based upon information furnished to the City by others and the City does not assume responsibility for its accuracy or completeness unless expressly provided otherwise.

3.3. Costs Incurred by the Bidder in Preparation of the Bids

Bidders are responsible for any and all costs associated with responding to this ITB. The City will not reimburse any Bidder for preparation, submittal, travel, or per diem costs. All expenses involved with the preparation and submission of Bids, or any work performed in connection with this solicitation, shall be the sole responsibility (and shall be at the sole cost and expense) of the Bidder and shall not be reimbursed by the City.

3.4. Qualifications of Bidders

Bids will only be considered from manufacturers or their authorized distributors. Authorized distributors must regularly maintain a substantial stock of the product and be actively engaged in its sale.

The City reserves the right to inspect the Bidder's facilities and inventory at any time prior to award or during the term of the Contract.

The City reserves the right to consider a Bidder's history of citations and/or violations of environmental regulations in determining responsibility and may deem a Bidder non-responsible based on such history.

Each Bidder shall submit with its Bid a complete history of all citations, violations, notices, and dispositions. Failure to submit such information shall be deemed an affirmation that no such citations or violations exist. The Bidder shall notify the City immediately of any citation or violation received after Bid opening and during the term of the Contract.

4. CONTRACT TERMS AND CONDITIONS

4.1. Contract Term and Renewal

Initial Contract price resulting from this ITB shall remain fixed for a period of no less than thirty-six (36) months from the Contract's initial effective date, commencing upon award by the appropriate City officials.

The City reserves the right to renew this Contract for an additional two (2) year periods, subject to vendor acceptance, satisfactory performance, and determination that renewal will be in the best interest of the City. Except as set forth in the Cost Adjustment section, all terms, prices, and conditions shall remain firm for the initial period of the Contract and any renewal period.

The City may require additions or deletions of participating agencies if a Contract renewal is considered. This may entail additional agencies and locations, and/or deletion of previous participating agencies. The Contractor shall make all required additions or deletions, as requested by the City, in accordance with the bid terms and conditions.

In the event delivery/service is scheduled to end because of the expiration of this Contract, the Contractor shall continue to deliver/service upon the request of the General Services Director. The extension period shall not extend for more than one hundred eighty (180) days beyond the expiration date of the existing Contract. The Contractor shall be compensated for the product/service at the rate in effect when this extension clause is invoked by the City.

4.2. Pricing and Title:

All prices bid shall be F.O.B. destination/delivered to each location, stated herein, including all delivery charges, and any applicable environmental taxes or surcharges. Prices quoted shall be firm for the contract, except for any adjustment, in accordance with the Cost Adjustment section. **Florida sales tax shall be excluded**.

4.2.1. All-Inclusive Pricing/No additional Charges

All prices shall be fully burdened and all-inclusive, including but not limited to delivery, labor, fuel, equipment, overhead, profit, compliance, telemetry (if any), and any other costs required to perform the Contract. All required services necessary to complete a delivery, including but not limited to connection, offloading, monitoring, and disconnection, shall be considered part of the delivery and included in the unit price. The Contractor shall be responsible for all subcontractor or third-party costs, and no such costs shall be passed through to the City.

The City and participating agencies shall not pay, and the Contractor shall not invoice, any additional charges, including but not limited to:

- On-site service charges
- Unauthorized call-out or emergency response fees
- Equipment usage or rental fees
- Standby, wait time, or demurrage charges (except as expressly permitted elsewhere)
- Mobilization/demobilization fees
- Minimum delivery charges or minimum service fees
- Any miscellaneous or undefined service charges

Any such charges included in an invoice shall be rejected and shall not be paid.

The City will not accept any Bid that includes separate pricing for telemetry or monitoring equipment, including rental, lease, or pass-through costs. Bids that include exceptions, qualifications, or separate pricing for equipment modifications, service charges, or non-inclusive pricing may be deemed non-responsive.

The submission of a Bid shall constitute the Contractor's agreement to all pricing requirements herein without exception. Any exceptions, qualifications, or conditional pricing submitted by a Bidder may result in the Bid being deemed non-responsive.

4.2.2. Emergency Delivery Pricing

Any charges associated with emergency, after-hours, weekend, holiday, or expedited deliveries must be clearly identified and separately itemized in the Bid pricing.

Such charges shall be fixed, not-to-exceed rates for the duration of the Contract and shall not be subject to escalation, surcharges, or additional fees.

No emergency or expedited delivery charges shall be paid unless the service was specifically requested and authorized by the City or participating agency.

4.2.3. Basis of Award

Award shall be based solely on the unit price for Liquid CO_2 Delivered (Item 1) as defined in the Bid pricing sheet.

Emergency delivery pricing and any optional, ancillary, or informational pricing shall not be considered in determining the lowest responsive and responsible Bidder.

4.2.4. Optional Pricing

Bidders may submit pricing for optional services, including but not limited to telemetry equipment, tank rental, installation, or other ancillary services. Such pricing is provided for informational purposes only and shall not be used in the evaluation or award determination.

Optional services shall not be required for Contract performance unless specifically requested and authorized by the City or participating agency.

4.3. Risk of Loss:

Risk of loss or damage to the product shall remain with the Vendor until delivery, inspection, and written acceptance by the City at the delivery location specified by the City or participating agency.

4.4. Inspection and Acceptance:

Delivery of the product shall not constitute final acceptance. The City reserves the right to inspect all product for damage, compliance with specifications, and completeness. Final acceptance shall occur only after satisfactory inspection and receipt of all required delivery documentation, certification, and compliance records.

4.5. Quantities

No warranty or guarantee is given or implied as to the total amount to be purchased as a result of this Contract. The quantities provided in this Invitation for Bids are estimates of annual usage for bid comparison purposes only. Quantities may be expressed in varying units depending on the participating agency's operational requirements. Carbon Dioxide will be ordered as needed.

4.6. Failure to Deliver/Cancellation of Order

If the Contractor fails to meet delivery requirements, the City reserves the right to cancel the order and procure the product from other sources. The Contractor shall be liable for any additional costs incurred by the City, unless such failure is due to a force majeure event.

4.7. Safety Requirements

The Contractor shall be responsible for initiating, maintaining, and supervising all safety precautions and programs related to the performance of the Contract. The Contractor shall comply with all applicable federal, state, and local safety regulations, including OSHA standards.

The Contractor shall take all reasonable precautions to prevent damage, injury, or loss to persons, property, and materials during delivery operations.

All delivery vehicles shall be maintained in safe operating condition and operated by personnel trained in the proper handling of the product.

Upon award, the Contractor shall inspect customer-owned storage tanks and report any safety deficiencies to the participating agency. The Contractor shall not be compensated for such inspections.

If requested by the City or participating agency, the Contractor shall provide up to two (2) annual safety training sessions covering proper handling, storage, and use of the product.

4.8. Non-Compliant Charges

Any invoice containing unauthorized charges prohibited under this Contract may be rejected in full. Repeated submission of non-compliant invoices shall constitute a material breach of Contract and may result in termination.

5. PARTICIPATING AGENCIES/CONTACT PERSONS/DELIVERY LOCATIONS/SPECIAL REQUIREMENTS

The following participating agencies are in the solicitation and the resulting contract:

5.1. City of Pompano Beach

Municipality:		City of Pompano Beach			
Contact Person	Phil Hyer	Email	Phil.hyer@copbfl.com	Phone:	(954)545-7030
Deliveries		City of Pompano Beach Water Treatment Plant 301 NE 12th Street Pompano Beach, FL 33060			
Size of City-Owned Storage Tanks		Twenty-Six (26) tons			
Number of Tanks		2			
Type of Connections:		1” Vapor & 1-1/2” Liquid with Standard Threaded brass connection			
Frequency of Delivery		Every 4 to 5 months			
Estimated annual quantity to be purchased		700 tons			

5.2. Town of Davie Utilities

Municipality:		Town of Davie Utilities			
Contact Person	Nathalie Marquez	Email	nmarquez@davie-fl.gov	Phone:	(954)327-3758
Deliveries		Town of Davie System V 7351 SW 30th Street Davie, FL 33314			
Size of City-Owned Storage Tanks		30-ton bulk storage tank			
Number of Tanks		1			
Type of Connections:					
Frequency of Delivery		Monthly			
Estimated annual quantity to be purchased		30,000 gallons			

5.3. Village of Wellington

Municipality		Village of Wellington			
Contact Person	Karla Berroteran	Email	kberroteran@wellingtonfl.gov	Phone:	(561)753-2465
Deliveries		Village of Wellington 1100 Wellington Trace Wellington, FL 33414			
Size of City-Owned Storage Tanks		14 Tons			
Number of Tanks		1			
Type of Connections		1 inch vapor interface 1 ½ inches liquid interface			
Frequency of Delivery		Quarterly			
Minimum Delivery Quantity		20,000 lbs.			
Estimated annual quantity to be purchased		730 Tons			
Delivery Hours		Mon-Fri 6:00 am - 5:00 pm No deliveries on the weekend or holidays unless requested by owner			

5.4. City of Coral Springs

Municipality:		City of Coral Springs			
Contact Person	Ryan Hinz	Email	rhinz@coralspings.gov	Phone:	(954)344-2361
Deliveries		Coral Springs Aquatic Complex 12441 Royal Palm Blvd Coral Springs, FL 33065			
Size of City-Owned Storage Tanks		450lb tanks			
Number of Tanks		2			
Type of Connections:		Standard Surface Mount Connection			
Frequency of Delivery		Monthly/As-Needed			
Estimated annual quantity to be purchased		19,800 gallons			
Delivery Hours		Mon-Thur 5:30 am - 9:30 pm Fri 5:30 am - 9:00 pm Sat-Sun 9:00 am - 5:00 pm			

Municipality:		City of Coral Springs			
Contact Person	Ryan Hinz	Email	rhinz@coralspings.gov	Phone:	(954)344-2361
Deliveries		Mullins Park Pool 10180 NW 29th Street Coral Springs, FL 33065			
Size of City-Owned Storage Tanks		400lb tanks			
Number of Tanks		1			
Type of Connections:		Standard Surface Mount Connection			
Frequency of Delivery		Monthly/As-Needed			
Estimated annual quantity to be purchased		19,800 gallons			
Delivery Hours		Mon-Fri 7:00 am - 8:00 pm Sat-Sun 7:00 am - 6:00 pm			

Municipality:		City of Coral Springs			
Contact Person	Ryan Hinz	Email	rhinz@coralspings.gov	Phone:	(954)344-2361
Deliveries		Cypress Water Park 10180 NW 29th Street Coral Springs, FL 33065			
Size of City-Owned Storage Tanks		400lb tanks			
Number of Tanks		1			
Type of Connections:		Standard Surface Mount Connection			
Frequency of Delivery		Monthly/As-Needed			
Estimated annual quantity to be purchased		19,800 gallons			
Delivery Hours		Mon-Fri 7:00 am - 8:00 pm Sat-Sun 7:00 am - 6:00 pm			

5.5. City of Pembroke Pines

Municipality:		City of Pembroke Pines			
Contact Person	Kevin Stone	Email	kevin.stone@jacobs.com	Phone:	(754)260-4513
Deliveries		Water Treatment Plant 7960 Johnson Street Pembroke Pines, FL 33035			
Size of City-Owned Storage Tanks		26 Tons			
Number of Tanks		1			
Type of Connections:		1.5”			
Frequency of Delivery		As-Needed, usually 4 deliveries per month			
Estimated annual quantity to be purchased		730 Tons			
Delivery Hours		Mon-Fri 7:00 am - 4:00 pm			

5.6. City of Sunrise

Municipality:		City of Sunrise			
Contact Person	Holly Raphaelson	Email	hraphaelson@sunrisefl.gov	Phone:	(954)572-2202
Deliveries		Sawgrass Waste Water Treatment Plant 4350 Springtree Drive, Sunrise, FL 33351			
Size of City-Owned Storage Tanks		12,000 lbs.			
Number of Tanks		1			
Type of Connections:		1.5” inch CGA Fitting			
Frequency of Delivery		Monthly			
Minimum Delivery Quantity		6,000 lbs.			
Delivery Time Requirement		1 week			
Estimated annual quantity to be purchased		425,000 lbs.			
Delivery Hours		Mon-Fri 7:00 am - 4:00 pm			

5.7. City of Boca Raton

Municipality:		City of Boca Raton	
Contact Person	Neil Phillips	Phone:	(561)393-7976
Deliveries		U.S Water Treatment Plant, Building 8 1301 Glades Road, Boca Raton, FL 33431	
Size of City-Owned Storage Tanks		18 tons	
Number of Tanks		2	
Type of Connections:		1” Vapor Balance w/CGA FTG & 1.5” Liquid Balance w/CGA FTG	
Frequency of Delivery		Monthly	
Estimated annual quantity to be purchased		230 tons	
Delivery Hours		Mon-Fri 7:00 am - 4:00 pm	

5.8. City of Delray Beach

Municipality:		City of Delray Beach	
Contact Person	Daniel Reed	Phone:	(561)243-7330
Deliveries		Delray Beach Water Treatment Plant 200 S.W. 6th Street Delray Beach, FL 33444	
Size of City-Owned Storage Tanks		100,000 pounds	
Number of Tanks		1	
Frequency of Delivery		Three (3) times per month	
Estimated annual quantity to be purchased		540 tons	
Delivery Hours		Mon-Fri 7:00 am - 4:00 pm, unless an emergency delivery order is required	

5.9. **Broward County**

Municipality:		Broward County	
Contact Person	Pedro Barrios	Phone:	(954)831-4115
Deliveries		Water and Waste Water Services District #1 3701 N. State Road 7 Lauderdale Lakes, FL 33319	
Size of City-Owned Storage Tanks		26 tons	
Number of Tanks		2	
Type of Connections:		One (1) 1” vapor balance and 1 1/2” liquid fill, both standard threaded brass connections.	
Frequency of Delivery		Every 15-30 days	
Estimated annual quantity to be purchased		450 tons	
Delivery Hours		Mon-Fri 9:00 am - 3:00 pm, unless an emergency delivery order is required	

Municipality:		Broward County	
Contact Person	Jose Otero	Phone:	(954)831-4127
Deliveries		Water and Waste Water Services District #2 1390 N.E. 50th Street Pompano Beach, FL 33064	
Size of City-Owned Storage Tanks		60 tons	
Number of Tanks		2	
Type of Connections:		One (1) 1” vapor balance and 1 1/2” liquid fill, both standard threaded brass connections.	
Frequency of Delivery		Every 15-30 days	
Estimated annual quantity to be purchased		450 tons	
Delivery Hours		Mon-Fri 9:00 am - 3:00 pm, unless an emergency delivery order is required	

6. AWARD AND RESERVATION OF RIGHTS

6.1. Intent to Award

If the City elects to make an award, the Contract may be awarded to the lowest responsive and responsible Bidder, or the City may, in its sole discretion, make multiple awards, including designation of a primary Contractor and one or more secondary Contractors, as determined to be in the best interest of the City and participating agencies.

In the event of multiple awards, the City may designate a primary Contractor for routine deliveries and one or more secondary Contractors to be utilized, without limitation, in the event of non-performance, inability to meet delivery requirements, emergency situations, supply constraints, or as otherwise determined by the City or participating agencies.

Participating agencies reserve the right to utilize any awarded Contractor based on availability, service requirements, pricing, geographic considerations, or operational needs.

The Awarded Bidder(s) will receive an automatically generated notice of award from the eBid System or written notification from the Procurement and Contracts Department.

The City reserves the right to postpone the award of the Contract for a period not to exceed one hundred eighty (180) days from the Bid unsealing date.

6.2. Reservation of Rights

The City reserves the right to reject any and all Bids, to waive any and all informalities not involving price, time, and changes in the work, and to negotiate contract terms with the Awarded Bidder, and the right to disregard all nonconforming, nonresponsive, unbalanced, or conditional Bids. Also, the City reserves the right to reject the Bid of any Bidder if the City believes that it would not be in the best interest of the City to make an award to that Bidder, whether because the Bid is not responsible, or the Bidder is unqualified or of doubtful financial ability or fails to meet any other pertinent standard or criteria established by the City. Therefore, discrepancies between the indicated sum of any column of figures and the correctly tabulated sum of any column will be resolved in favor of the correctly tabulated sum of any column.

The City may consider the qualifications and experience of Subcontractors, Suppliers, and other persons and organizations proposed for those portions of the work as to which the identity of Subcontractors, Suppliers, and other persons and organizations must be submitted as provided in the Supplementary Conditions. The City also may consider the operating costs, maintenance requirements, performance data, and guarantees of major items of materials and equipment proposed for incorporation in the work when such data is required to be submitted prior to the Notice of Award.

The City may conduct such investigations as the City deems necessary to assist in the evaluation of any Bid and to establish the responsibility, qualifications, and financial ability of Bidders, proposed Subcontractors, Suppliers, and other persons and organizations to perform and furnish the product in accordance with the Contract resulting from the ITB to the City's satisfaction within the prescribed time.

6.3. Fair Market Pricing

The City requires that all Bidders submit cost estimates that are consistent with fair market pricing. All Bids will be reviewed to ensure that proposed costs align with current industry standards for similar projects. If any submitted Bid is found to be substantially higher or lower than what is deemed reasonable by prevailing market conditions, the City reserves the right to reject the Bid. Such determinations will consider both the overall project cost and individual line items within the Bid. The City may rely on independent evaluations, cost databases, or comparative analyses to establish fair market ranges.

In submitting a Bid, each Bidder acknowledges and agrees that:

1. Submitted proposed costs reflect competitive pricing within the industry.
2. Bidder understands and accepts that Bids with significantly inflated or deflated costs, relative to fair market standards, may be excluded from consideration without further recourse.

In evaluating Bids, the City will consider the Bidders' qualifications, whether or not the Bids comply with the prescribed requirements, and such alternates, unit prices, and other data as may be requested in the ITB or prior to the Notice of Award.

If the City is able to procure the product from the open market at a lower price during the contract term, the Contractor shall have the opportunity to meet such pricing. If the Contractor is unable or unwilling to do so, the City reserves the right to procure the product through other means.

7. INSURANCE REQUIREMENTS

Insurance Requirements Attachment outlines the insurance requirements applicable to this Invitation to Bid (ITB) and forms an integral part of the Bidder's submission. Upon award of the contract, the Bidder shall obtain and maintain, at its sole expense, insurance coverage that meets or exceeds the limits and conditions specified in the Insurance Requirements Attachment. These requirements reflect the coverage deemed necessary by the City for the scope and nature of the contracted work. Participating agencies may have insurance requirements that differ from those of the City of Pompano Beach.

The awarded Contractor shall be responsible for submitting to the City, in a timely manner, Certificates of Insurance evidencing that all required coverage is in full force and effect. Each certificate must name the City as an additional insured on a primary and non-contributory basis for all applicable policies. All insurance documentation is subject to the City's review and written approval or disapproval before commencement of any work under the Contract.

8. STANDARD PROVISIONS

8.1. Submission, Representation, and ITB Conditions

Bids must be submitted to the City on or before the date and time specified in the solicitation. By electronically submitting a Bid, the Bidder represents and warrants that it has thoroughly examined and understands the solicitation documents; has complied with all requirements contained therein; has based its Bid upon performing and furnishing the goods and/or services in strict accordance with the solicitation documents; and acknowledges that the solicitation documents are sufficient in scope and detail to convey full understanding of all terms, conditions, and requirements for performance. The Bid shall be deemed submitted without exception unless expressly stated in the Bid at the time of submission. Exceptions, deviations, or conditions not included in the Bid at the time of submission shall not be considered after the submittal deadline.

All Bids and supporting materials submitted shall become the property of the City. The City reserves the right to postpone or cancel the solicitation, to reject any or all Bids, to waive technical or formal irregularities, and to award a contract in whole or in part if deemed in the best interest of the City. The City shall not be liable for any costs incurred by the Bidder in preparing or submitting a Bid or in connection with this solicitation.

8.2. Acceptance Period

Bids submitted in response to this ITB must be valid for a period of no less than one hundred eighty (180) days from the closing date of this solicitation.

8.3. Withdrawal Of Bids

A firm may withdraw its Bids without prejudice no later than the advertised deadline for submission of Bids by using the eBid System or through written communication to the Procurement and Contracts Department, 1010 N.E. 3rd Avenue, Building C, Pompano Beach, Florida 33060.

8.4. Protest Procedures

The Protest Procedures established within the Procurement and Contracts Procedures Manual and Section 120.57, Florida Statutes, must be followed to file a valid Protest to this solicitation. To be considered, protests concerning the proposed solicitation award must be filed in writing with the Procurement and Contracts Director. They may only be filed by Bidders or by Bidders whose solicitation or award may be aggrieved. The initial protest must be addressed to the following:

Director of Procurement & Contracts, City of Pompano Beach
1010 N.E. 3rd Avenue, Building C, Pompano Beach, Florida 33060

8.5. Familiarity With Laws

It is assumed the selected firm(s) will be familiar with all federal, state, and local laws, ordinances, rules, standards, and regulations that may affect its services pursuant to this ITB. Ignorance on the part of the firm will in no way relieve the firm from responsibility for compliance.

8.6. Staff Assignment

The City of Pompano Beach reserves the right to approve or reject, for any reason, the Bidder's staff assigned to this project at any time. Background checks may be required at the discretion of the City.

8.7. Contract Terms

The contract shall include, at a minimum, this ITB document and the successful Bidder's Bids. The City of Pompano Beach City Attorney shall prepare the contract. If the City of Pompano Beach defends any claim, demand, cause of action, or lawsuit arising out of any act, action, negligent acts or negligent omissions, or willful misconduct of the contractor, its employees, agents, or servants during the performance of the contract, whether directly or indirectly, the contractor agrees to reimburse the City of Pompano Beach for all expenses, attorney's fees, and court costs incurred in defending such claim, cause of action or lawsuit.

8.8. Waiver

It is agreed that no waiver or modification of the contract resulting from this ITB, or of any covenant, condition, or limitation contained in it shall be valid unless it is in writing and duly executed by the party to be charged with it, and that no evidence of any waiver or modification shall be offered or received in evidence in any proceeding, arbitration, or litigation between the parties arising out of or affecting this contract, or the right or obligations of any party under it, unless such waiver or modification is in writing, duly executed as above. The parties agree that the provisions of this paragraph may not be waived except by a duly executed writing.

8.9. Manner of Performance

The Bidder agrees to perform its duties and obligations under the contract resulting from this ITB in a professional manner and in accordance with all applicable local, federal, and state laws, rules, and regulations. Bidder agrees that the services provided under the contract resulting from this ITB shall be provided by employees who are educated, trained, experienced, certified, and licensed in all areas encompassed within their designated duties. Bidder agrees to furnish the City of Pompano Beach with all documentation, certification, authorization, license, permit, or registration currently required by applicable laws, rules, and regulations. Bidder further certifies that it and its employees are now in and will maintain good standing with such governmental agencies and that it and its employees will keep all licenses, permits, registrations, authorizations, or certifications required by applicable laws or regulations in full force and effect during the term of this contract. Failure of the Bidder to comply with this paragraph shall constitute a material breach of contract.

8.10. Materials, Equipment, Quality, and Substitutions

Unless otherwise expressly stated in the solicitation documents, all materials, equipment, and supplies provided under the resulting Contract shall be new, of the latest model, of good quality, and free from defects in workmanship and materials. Reconditioned, refurbished, rebuilt, discontinued, used, shopworn, demonstrator, prototype, or similar items shall not be furnished without the prior written approval of the City.

Where specific materials, equipment, brands, models, drawings, or specifications are referenced in the solicitation documents, the Contract, if awarded, shall be based upon the items described therein. No substitute or “or equal” item shall be furnished unless the solicitation expressly permits substitutions and the City provides prior written approval. Requests for approval of substitute or “or equal” items, when permitted, shall be submitted in writing in accordance with the procedures outlined in the solicitation documents, and the City’s determination of acceptability shall be final.

8.11. Occupational Health, Safety, and Hazardous Materials

If the suppliers use, handle, store, transport, deliver, test, dispose of, or otherwise bring onto City property any chemical, biological, hazardous, toxic, or regulated substance or material in performance of the Contract, the Contractor shall comply with all applicable federal, state, and local laws, regulations, and standards, including as applicable, OSHA requirements, EPA regulations, and Florida Statutes.

The Contractor shall provide current Safety Data Sheets (SDS) for all applicable products or substances upon request and prior to use or delivery to City property. All materials shall be properly labeled in accordance with OSHA and other applicable regulatory standards. The Contractor shall ensure proper storage, handling, transportation, disposal, and employee training related to such materials and shall implement appropriate safety procedures, including spill prevention and response protocols.

The Contractor shall be solely responsible for any violations, releases, spills, contamination, improper disposal, regulatory citations, or damages arising from its handling or use of such materials and shall immediately notify the City of any incident involving hazardous or regulated substances occurring in connection with the Contract.

Contractor shall be responsible for the proper disposal of hazardous, chemical, biological, or regulated waste in accordance with all applicable laws and shall provide documentation of lawful disposal upon request.

8.12. Environmental Regulations

The City reserves the right to consider the Bidder's history of citations or violations of Environmental Regulations and investigate the Bidder's responsibility. Further, it reserves the right to declare the Bidder not responsible if the Bidder's history of violations warrants such a determination in the City's opinion. The Bidder shall submit a

complete history of all citations, violations, notices, and dispositions within the Bids. The non-submission of any such documentation shall be deemed an affirmation by the Bidder that there are no citations or violations. The Bidder shall notify the City immediately of notice of any citation or violation, which the Bidder may receive after the ITB opening date and during the time of performance of any contract/agreement awarded to it.

8.13. Omissions

Omissions in the specifications of the ITB, Attachments, Exhibits, or any Addendum regarding any details or the omission from the specification of a detailed description concerning any point shall be interpreted as meaning that only the best available units or service shall be provided. The best commercial practices are to prevail, and only materials and workmanship of first quality are to be used to submit these Bids.

8.14. Hold Harmless and Indemnification

Bidder covenants and agrees that it will indemnify and hold harmless the City and all of its officers, agents, and employees from any claim, loss, damage, cost, charge, or expense arising out of any act, action, neglect, or omission by the Bidder, whether direct or indirect, or whether to any person or property to which the City or said parties may be subject, except that neither the Bidder nor any of its subcontractors will be liable under this section for damages arising out of injury or damage to persons or property directly caused by or resulting from the sole negligence of the City or any of its officers, agents or employees.

8.15. Composition Of Project Team

The principals and personnel named in the Bids must perform the services throughout the contractual term unless otherwise provided for by way of a negotiated contract or written amendment to the same executed by both parties. No diversion or substitution of principals or personnel will be allowed unless a written request that sets forth the qualifications and experience of the proposed replacement(s) is submitted to and approved by the City in writing.

8.16. Survivorship Rights

This contract resulting from this ITB shall be binding on and inure to the benefit of the respective parties and their executors, administrators, heirs, personal representatives, successors, and assigns.

8.17. Termination

The City of Pompano Beach may terminate the contract resulting from this ITB without cause upon providing the contractor with at least sixty (60) days prior written notice. Should either party fail to perform any of its obligations under the contract resulting from this ITB for a period of thirty (30) days after receipt of written notice of such failure, the non-defaulting part will have the right to terminate the contract immediately upon delivery of written notice to the defaulting part of its election to do so. The foregoing rights of termination are in addition to any other rights and remedies such party may have.

8.18. Governing Law

Any agreement resulting from this ITB shall be governed by the laws of the State of Florida, and the venue for any legal action relating to such agreement will be the 17th Judicial Circuit Court of Broward County, Florida.

8.19. Relationship to the City

It is the intent of the City, and the Bidder hereby acknowledges and agrees that the successful Bidder is considered to be an independent Contractor and that neither the Bidder nor the Bidder's employees, agents, or Contractors shall, under any circumstances, be considered employees or agents of the City.

8.20. Cone of Silence

Cone of Silence shall take effect once this solicitation is released to the General Public and shall remain in effect until the City Commission has taken final action to approve or reject an award, or otherwise terminate the solicitation. During the Cone of Silence period, Respondents to this solicitation, or persons acting on their behalf, including lobbyists, shall not communicate, directly or indirectly, regarding any aspect of this solicitation with any member of the City Commission, the City Clerk, the City Manager's Office, any Evaluation Committee member, or any other City of Pompano Beach employee, except in writing to the Procurement and Contracts Department staff as expressly permitted in this solicitation. Violation of the Cone of Silence may be grounds for rejection of a Proposal or other appropriate action as permitted by City ordinance.

8.21. Communications

No negotiations, decisions, or actions shall be initiated or executed by the Bidders as a result of any discussions with any City employee. Only those communications in writing from the City may be considered duly authorized expressions on behalf of the City. In addition, only communications from Bidders that are signed and in writing will be recognized by the City as duly authorized expressions on behalf of Bidders.

8.22. Conflict Of Interest

To determine any possible conflict of interest, each Bidder must disclose if any City employee is also an owner, corporate officer, or employee of the firm. If any City employee is an owner, corporate officer, or an employee, the Bidder must file a statement with the Broward County Supervisor of Elections pursuant to § 112.313, Florida Statutes.

8.23. Lobbying

No Lobbying Permitted: As to any matter relating to this solicitation, the Bidder, project team member, or anyone representing the Bidder is advised they are prohibited from contacting or lobbying the Mayor, any City Commissioner, City employees, agents, or any other person working on behalf of the City related to or involved with this solicitation, including all members of the City and CRA advisory committees. For purposes of clarification, a team's representatives shall include, but not be limited to, the Bidder's employees, partners, attorneys, officers, directors, consultants, lobbyists, or any actual or potential subcontractor or consultant of the Bidder and the Bidder's team. All questions regarding the solicitation are to be submitted using the Questions feature in the eBid System. Any violation of this condition may result in rejection and disqualification of the response/Bids. **This "No Lobbying Provision" is in effect from the date of publication of the solicitation and shall terminate when the City approves the execution of a Contract with an awarded Bidder, rejects all responses, or otherwise takes action, which ends the solicitation process.**

The Bidder shall disclose any commitment, direct or indirect, financial or otherwise made to any person, entity, institution, or association (Recipient), other than a team member identified as required by the solicitation submittal requirements, in connection with or potentially in connection with this solicitation. Because of the City's commitment to complete transparency regarding this solicitation, the Disclosure Form shall be required to be updated to include additional Recipients, if any, up to and including the date of approval by the City Commission of the final negotiated Agreement. Additionally, all such Recipients shall be required to register as lobbyists as required by Sec. 34.402 of the City's Code.

8.24. Right to Inspect or Audit

Contractor's records which shall include but not be limited to accounting records, written policies, procedures, computer records, disks and software, videos, photographs, subcontract files (including Bids of Successful and Unsuccessful Bidders, originals, estimates, estimating worksheets, correspondence, change order files (including documentation covering negotiated settlements), and any other supporting evidence necessary to substantiate charges related to the agreement/contract (all the foregoing hereinafter referred to as "records") shall be open to inspection and subject to audit and reproduction, during normal working hours, by City's agent or its authorized representative to the extent necessary to adequately permit evaluation and verification of any invoices, payments or claims submitted by the Contractor or any of its payees pursuant to the execution of the agreement/contract. Such records subject to the examination shall also include but are not limited to, those necessary to evaluate and verify direct and indirect costs (including overhead allocations) as they may apply to costs associated with the agreement/contract.

For the purpose of such audits, inspections, examinations, and evaluations, the City's agent or authorized representative shall have access to said records from the effective date of the agreement/contract, for the duration of the Work, and until five (5) years after the date of final payment by the City to the Contractor pursuant to the agreement/contract. The City's agent or authorized representative shall have access to the Contractor's facilities, all necessary records, and adequate and appropriate workspace to conduct audits in compliance with this article. The City's agent or its authorized representative shall give auditees reasonable advance notice of intended audits.

The Contractor shall require all subcontractors, insurance agents, and material suppliers (payees) to comply with this article's provisions by inserting the requirements hereof in any written agreement/contract. Failure to obtain such written agreements/contracts that include such provisions shall be a reason to exclude some or all of the related payees' costs from amounts payable to the Contractor pursuant to the agreement/contract.

8.25. No Discrimination

There shall be no discrimination as to race, sex, color, age, religion, or national origin in the operations conducted under any contract with the City.

8.26. Drug-Free Workplace

The selected firm(s) must verify that they will operate a “Drug-Free Workplace” as outlined in Florida Statute 287.087.

8.27. Public Entity Crimes

A person or affiliate who has been placed on the convicted vendor list following a conviction for public entity crime may not submit a Bids on a contract to provide any goods or services to a public entity, may not submit a Bids on a contract with a public entity for the construction or repair of a public building or public work, may not submit Bids on leases of real property to a public entity, may not be awarded or perform work as a contractor, supplier, subcontractor, or consultant under a contract with any public entity, and may not transact business with any public entity in excess of the threshold amount provided in Florida Statute, Section 287.017, for CATEGORY TWO for a period of 36 months from the date of being placed on the convicted vendor list.

8.28. Patent Fees, Royalties, And Licenses

If the selected Bidder requires or desires to use any design, trademark, device, material, or process covered by letters of patent or copyright. In that case, the selected Bidder and his surety shall indemnify and hold harmless the City from any and all claims for infringement because of the use of any such patented design, device, trademark, copyright, material, or process in connection with the work agreed to be performed and shall indemnify the City from any cost, expense, royalty or damage which the City may be obligated to pay because of any infringement at any time during or after completion of the work.

8.29. Price Adjustments

Prices offered shall remain firm for the initial thirty-six (36) month period of the Agreement. Any request for a price adjustment must be submitted in writing, with full supporting documentation, no less than ninety (90) calendar days prior to the end of the applicable contract period.

Unit price adjustments shall not be effective unless and until approved in writing by the City. Any adjustment invoiced without prior written approval shall not be paid.

The City may, at its sole discretion, consider adjustments to pricing if the cost or availability of supplies is materially affected by significant and unforeseen market volatility. In such cases, the Contractor must provide sufficient documentation demonstrating that:

i. The volatility is due to causes wholly beyond the Contractor’s control;
ii. The volatility impacts the broader marketplace or industry, not solely the Contractor’s source of supply;
iii. The impact on pricing or supply availability is substantial; and
iv. Continued performance under the existing pricing would result in a substantial financial hardship to the Contractor.

All approved price adjustments must be confirmed in writing by the Director of Procurement and Contracts prior to implementation.

PRICE REDUCTIONS: Awarded vendors may offer to the City, at any time during the Agreement period, additional discounts from the prices offered in this Solicitation and invoice less than the prices offered in their submitted Bid. If, from the date of Bid opening, the Awardee either Bids the same products at a lower price than offered to the City or reduces the price of the Bidding product to another entity, the lowest of these reduced prices shall be extended to the City.

8.30. Invoicing/Payment

All invoices shall be submitted via email apcityofpompanobeach@copbfl.com or by mail to the City of Pompano Beach, Accounts Payable, P.O. Drawer 1300, Pompano Beach, Florida, 33061. In accordance with Florida Statutes, Chapter 218, Local Government Prompt Payment Act, payment shall be made within thirty (30) days after receipt of a proper invoice and acceptance of the goods or services provided.

8.31. Taxes

The City of Pompano Beach, Florida, does not pay Federal Excise or State taxes on purchases of tangible personal property. The sales tax exemption number is available upon request. This exemption does not apply to purchases of tangible personal property made by contractors who use such property in the performance of contracts for the improvement of real property owned by the City of Pompano Beach.

8.32. Force Majeure

Neither party shall be obligated to perform any duty, requirement, or obligation under this ITB if the City has determined that such performance is prevented by fire, hurricane, earthquake, explosion, war, sabotage, accident, flood, acts of God, strikes, or other labor disputes, riot or civil commotions, epidemics, pandemics, government regulations, and the issuance or extension of existing government orders of the United States, the State of Florida, or local county and municipal governing bodies, or because of any other matter or condition beyond the control of either party and which cannot be overcome by reasonable diligence and without unusual expense ("Force Majeure"). In no event shall lack of funds on the part of either party be deemed Force Majeure.

8.33. Public Records

The City is a public agency subject to Section 119, Florida Statutes. The Contractor shall comply with Florida's Public Records Law, as amended. Specifically, the Contractor shall:

a. Keep and maintain public records required by the City in order to perform the service;
b. Upon request from the City's custodian of public records, provide the City with a copy of requested records or allow the records to be inspected or copied within a reasonable time at a cost that does not exceed the cost provided in Section 119, Florida Statutes or as otherwise provided by law;
c. Ensure that public records that are exempt or confidential and exempt from public records disclosure requirements are not disclosed except as authorized by law for the duration of the agreement/contract term and following completion of the agreement/contract if the Contractor does not transfer the records to the City; and
d. Upon completion of the agreement/contract, transfer, at no cost to the City, all public records in possession of the Contractor or keep and maintain public records required by the City to perform the service. If the Contractor transfers all public records to the City upon completion of the agreement/contract, the Contractor shall destroy any duplicate public records that are exempt or confidential and exempt from public records disclosure requirements. If the Contractor keeps and maintains public records upon completion of the agreement/contract, the Contractor shall meet all applicable requirements for retaining public records. All records stored electronically must be provided to the City upon request from the City's custodian of public records in a format compatible with the City's information technology systems.

Failure of the Contractor to provide the above-described public records to the City within a reasonable time may subject the Contractor to penalties under Section 119.10, Florida Statutes, as amended.

8.34. Public Records Custodian:

If the awarded Bidder has questions regarding the application of Chapter 119, Florida Statutes, to the awarded Bidder's duty to provide public records relating to the agreement/contract, contact the custodian of public records at:

CITY CLERK
100 W. Atlantic Blvd., Suite 253,
Pompano Beach, Florida 33060
(954) 786-4611
RecordsCustodian@copbfl.com

9. ADDENDA

The issuance of a written addendum or posting of an answer in response to a question submitted using the Questions feature in the eBid System is the only official method by which interpretation, clarification, or additional information can be given. If any addenda are issued for this ITB solicitation, they will be issued via the eBid System. The Bidder must obtain all Addendum/Addenda posted for this ITB in the eBid System before submitting a response to this ITB.

City of Pompano Beach
Procurement and Contracts Department
1010 N.E. 3rd Avenue
Pompano Beach, Florida, 33060

May 12, 2026

ADDENDUM #1

ITB26-036 SEFL NIGP Cooperative Purchase – Carbon Dioxide Liquid Bulk Delivery

To Whom It May Concern,

Addendum #1 has been issued and posted on the City's eBid System.

Proposers are reminded to acknowledge receipt of this Addendum by completing the Addendum Attribute in the Attributes tab within the eBid System.

The City is issuing this Addendum to provide the insurance requirements and correct the solicitation title.

Proposers are responsible for reviewing all newly posted documents and incorporating this information into their proposals as applicable.

The remainder of the solicitation is unchanged at this time.

Sincerely,

Michael Lee,
Purchasing Agent

cc: website

INSURANCE REQUIREMENTS ATTACHMENT ITB26-036

Contractor shall not commence services under the resulting Contract until certification or proof of insurance detailing terms and provisions have been received and approved in writing by the City's Risk Manager. If you are responding to this ITB and have questions regarding the insurance requirements hereunder, please contact the City's Purchasing Division of the General Services Department at (954) 786-4098. If the Contract has already been awarded, please direct any inquiries and proof of the requisite insurance coverage to City staff responsible for oversight of the subject project/Contract.

Contractor is responsible for delivering to the City for timely review and written approval/disapproval Certificates of Insurance, which evidence that all insurance required hereunder is in full force and effect, and which name on a primary basis, the City as an additional insured on all such coverage. Such policy or policies shall be issued by United States Treasury-approved companies/firms authorized to do business in the State of Florida. The policies shall be written on forms acceptable to the City's Risk Manager, meet a minimum financial A.M. Best and Company rating of no less than Excellent, and be part of the Florida Insurance Guarantee Association Act. No changes are to be made to these specifications without prior written approval of the City's Risk Manager.

Throughout the term of the Contract, the City, by and through its Risk Manager, reserves the right to review, modify, reject, or accept any insurance policies required by this Contract, including limits, coverages, or endorsements. City reserves the right, but not the obligation, to review and reject any insurer for coverage due to poor financial condition or failure to operate legally.

Failure to maintain the required insurance shall be considered an event of default. The requirements herein, as well as the City's review or acceptance of insurance maintained by the Contractor, are not intended to and shall not in any way limit or qualify the liabilities and obligations assumed by the Contractor under the resulting Contract.

Throughout the term of the Contract, the Contractor and all subcontractors or other agents hereunder shall, at their sole expense, maintain in full force and effect the following insurance coverages and limits described herein, including endorsements:

1. Worker's Compensation Insurance covering all employees and providing benefits as required by Florida Statute, Chapter 440, regardless of the size of the company/firm (number of employees) or the state in which the work is to be performed or the state in which the Contractor is obligated to pay compensation to employees engaged in the performance of the work. The Contractor further agrees to be responsible for the employment, control, and conduct of its employees and for any injury sustained by such employees in the course of their employment.

2. Liability Insurance.

(a) Naming the City of Pompano Beach as an additional insured as City's interests may appear, on General Liability Insurance only, relative to claims which arise from the Contractor's negligent acts or omissions in connection with the Contractor's performance under this Contract.

(b) Such Liability Insurance shall include the following checked types of insurance and indicated minimum policy limits.

	Type of Insurance	**Limits of Liability**
	GENERAL LIABILITY:	Per Occurrence Aggregate
	* Policy to be written on a claims occurrence basis	
		$1,000,000 $2,000,000
XX	comprehensive form	bodily injury and property damage
__	premises - operations	bodily injury and property damage
	explosion & collapse hazard	
	underground hazard	
XX	products/completed operations hazard	bodily injury and property damage combined
XX	contractual insurance	bodily injury and property damage combined
XX	broad form property damage	bodily injury and property damage combined
XX	Independent Contractors	personal injury
XX	personal injury	
__	CG2010	ongoing operations (or its' equivalent)
__	CG 2037	completed operations (or its' equivalent)
__	sexual abuse/molestation	Minimum $1,000,000 Per Occurrence and Aggregate

---

	AUTOMOBILE LIABILITY:	Minimum $1,000,000 Per Occurrence and Aggregate. Bodily injury (each person) bodily injury (each accident), property damage, bodily injury and property damage combined.
XX	comprehensive form	
XX	owned	
XX	hired	
XX	non-owned	

REAL & PERSONAL PROPERTY

* Policy to be written on a claims occurrence basis

__	comprehensive form	Agent must show proof it has this coverage.		

EXCESS / UMBRELLA LIABILITY		Per Occurrence	Aggregate
* Policy to be written on a claims occurrence basis			
excess/umbrella	bodily injury and property damage combined	$5,000,000	$5,000,000

PROFESSIONAL LIABILITY		Per Occurrence	Aggregate
* Policy to be written on a claims made basis			
professional liability		$1,000,000	$1,000,000

(c) If Professional Liability Insurance is required, Bidder agrees the indemnification and hold harmless provisions of the Contract shall survive the termination or expiration of the Contract for a period of three (3) years unless terminated sooner by the applicable statute of limitations.

ENVIRONMENTAL / POLLUTION LIABILITY		Per Occurrence	Aggregate
* Policy to be written on a claims-made basis			
XX	environmental/pollution liability	$1,000,000	$1,000,000

CYBER LIABILITY		Per Occurrence	Aggregate
* Policy to be written on a claims occurrence basis			
		$1,000,000	$1,000,000

__ Network Security / Privacy Liability
__ Breach Response / Notification Sublimit (minimum limit of 50% of policy aggregate)
__ Technology Products E&O - $1,000,000 (only applicable for vendors supplying technology related services and or products)
__ Coverage shall be maintained in effect during the period of the Contract and for not less than four (4) years after termination/ completion of the Contract.

---

3. Employer's Liability. Contractor and all subcontractors shall, for the benefit of their employees, provide, carry, maintain and pay for Employer's Liability Insurance in the minimum amount of One Hundred Thousand Dollars ($100,000.00) per employee, Five Hundred Thousand Dollars ($500,000) per aggregate.

4. Policies: Whenever, under the provisions of the Contract, insurance is required of the Contractor, the Contractor shall promptly provide the following:

a) Certificates of Insurance evidencing the required coverage;

b) Names and addresses of firms providing coverage;

c) Effective and expiration dates of policies; and

d) A provision in all policies affording City thirty (30) days written notice by a carrier of any cancellation or material change in any policy.

5. Insurance Cancellation or Modification. Should any of the required insurance policies be canceled before the expiration date, or modified or substantially modified, the issuing company/firm shall provide thirty (30) days written notice to the City.

6. Waiver of Subrogation. Contractor hereby waives any and all right of subrogation against the City, its officers, employees and agents for each required policy. When required by the insurer, or should a policy condition not permit an insured to enter into a pre-loss Contract to waive subrogation without an endorsement, then, Contractor shall notify the insurer and request the policy be endorsed with a Waiver of Transfer of Rights of Recovery Against Others, or its equivalent. This Waiver of Subrogation requirement shall not apply to any policy which includes a condition to the policy not specifically prohibiting such an endorsement, or voids coverage should Contractor enter into such an Contract on a pre-loss basis.

The certification or proof of insurance must contain a provision for notification to the City ten (10) days in advance of any material change in coverage or cancellation.

The Contractor shall furnish to the City the certification or proof of insurance required by the provisions set forth above, within ten (10) days after notification of award of Contract. Certificate(s) to be issued to City of Pompano Beach, Attention Risk Manager, 100 West Atlantic Boulevard, Pompano Beach, Florida, 33060.

ITB26-036 Addendum 1
Airgas USA, LLC
Airgas, Inc.
Supplier Response

Event Information

Number:	ITB26-036 Addendum 1
Title:	SEFL NIGP Cooperative Purchase - Carbon Dioxide Liquid Bulk Delivery
Type:	Invitation To Bid
Issue Date:	4/16/2026
Deadline:	5/18/2026 02:00 PM (ET)
Notes:	The City of Pompano Beach (the “City”) is interested in receiving Bids in response to the attached ITB for the Carbon Dioxide Liquid Bulk Delivery. Bidders must be registered on the City’s eBid System to view the solicitation documents and respond to this solicitation. The complete solicitation document can be downloaded free of charge from the eBid System at https://pompanobeachfl.ionwave.net/. Bids must bear the electronic signature of an authorized officer of the Bidder who is legally authorized to enter into a contractual relationship in the Bidder's name. THE CITY will consider the submittal of a Bid as constituting an offer by the Bidder to perform the required services at the prices stated herein. The City is not responsible for the accuracy or completeness of any documentation the Bidder receives from any source other than the eBid System. The Bidder is solely responsible for downloading all required documents. Responses will be electronically unsealed in a public forum and read aloud.

Bids must be submitted electronically at (https://pompanobeachfl.ionwave.net), referred to hereinafter as the eBid System, on or before the date and time stated in Section 1 — Schedule of Events. Bids received after 2:00:00 p.m. ET on the due date will not be considered, and late Bids will not be accepted.

Cone of Silence shall take effect once this solicitation is released to the General Public and shall remain in effect until the City Commission has taken final action to approve or reject an award, or otherwise terminate the solicitation. During the Cone of Silence period, Respondents to this solicitation, or persons acting on their behalf, including lobbyists, shall not communicate, directly or indirectly, regarding any aspect of this solicitation with any member of the City Commission, the City Clerk, the City Manager's Office, any Evaluation Committee member, or any other City of Pompano Beach employee, except in writing to the Procurement and Contracts Department staff as expressly permitted in this solicitation. Violation of the Cone of Silence may be grounds for rejection of a Proposal or other appropriate action as permitted by City ordinance.

All communications must go through the eBid System (IonWave) or the Purchasing Agent assigned to this solicitation, Eric Seifer, at (954)786-4166, or eric.seifer@copbfl.com. Any information that amends any portion of this solicitation received by any method other than an Addendum issued through IonWave is not binding on the City of Pompano Beach.

Carefully read all portions of the ITB document to ensure the Bidder's Bid fully complies with all requirements.

Contact Information

Contact: Mr. Eric Seifer Purchasing Supervisor
Address: Purchasing
1010 NE 3rd Avenue
Pompano Beach, FL 33060
Phone: (954) 786-4166
Fax: (954) 786-4168
Email: eric.seifer@copbfl.com

Airgas USA, LLC Information

Contact: Katey Shartzer
Address: 5249 Tampa West Blvd.
Tampa, FL 33634
Phone: (813) 220-8881
Email: Katey.shartzer@airgas.com

By submitting this Response I affirm I have received, read and agree to the all terms and conditions as set forth herein. I hereby recognize and agree that upon execution by an authorized officer of the City of Pompano Beach, this Response, together with all documents prepared by or on behalf of the City of Pompano Beach for this solicitation, and the resulting Contract shall become a binding agreement between the parties for the products and services to be provided in accordance with the terms and conditions set forth herein. I further affirm that all information and documentation contained within this response to be true and correct, and that I have the legal authority to submit this response on behalf of the named Supplier (Offeror).

Katey J. Shartzer
Signature

katey.shartzer@airgas.com
Email

Submitted at 5/18/2026 09:43:13 AM (ET)

Supplier Note

Please note that all three Coral Spring pool locations should be submitted on a separate bid. The current bid is intended exclusively for bulk CO2 gas.

Requested Attachments

Product Analysis

2026-2028 Airgas LCO2_COC_Bev Grade_Lot_Star MS.pdf

Upload a representative certificate of analysis (COA) or product specification sheet for the liquid carbon dioxide offered, identifying purity and any impurities.

NSF Certification

2022 WQA NSF CERT_STAR_MS (1).pdf

Upload proof of certification demonstrating that the product complies with NSF/ANSI/CAN Standard 60 (latest edition) for use in drinking water treatment.

Safety Data Sheet (SDS)

Carbon Dioxide, Refrigerated Liquid SDS 001181 - Issue 5-1-2020 (2).pdf

Upload the current Safety Data Sheet for the product offered.

Reference List / Client List

Reference List.docx

Bidder shall provide a minimum of three (3) references for similar services (bulk liquid carbon dioxide or comparable chemical delivery), preferably municipal or utility clients.

Each reference shall include:

- Agency/Company Name
- Contact Person
- Title
- Phone Number
- Email Address
- Brief description of services provided

Failure to provide the required reference information may result in the Bidder being deemed non-responsive.

Response Attachments

Insurance rider 5-13 (1).docx

Airgas Insurance Rider

The City of Pompano Beach Disclaimer Letter.docx

Disclaimer Letter

Bid Attributes

1	**Terms & Conditions** Contractor acknowledges that it has read, understands, and agrees to be bound by all terms, conditions, and specifications contained in this solicitation and any resulting contract. Failure to comply may result in rejection of the response or termination of any resulting agreement. ☑ Agree
2	**Acknowledgement of Addenda** Contractor acknowledges receipt of all addenda issued for this solicitation and certifies that all addenda have been reviewed and incorporated into its response. Failure to acknowledge all addenda may result in rejection of the response as non-responsive. ☑ Agreed
3	**Vendor Certification Regarding Scrutinized Companies Lists (Any Dollar Amount)** Section 215.4725, Florida Statutes, prohibits agencies from contracting (at any dollar amount) with companies on the Scrutinized Companies that Boycott Israel List, or with companies that are engaged in a boycott of Israel. As the person authorized to electronically sign on behalf of Respondent, I hereby certify by selecting the box below that the company responding to this solicitation is not listed on the Scrutinized Companies that Boycott Israel List. I also certify that the company responding to this solicitation is not participating in a boycott of Israel, and is not engaged in business operations in Syria or Cuba. I understand that pursuant to sections 287.135 and 215.4725, Florida Statutes, the submission of a false certification may subject company to civil penalties, attorney's fees, and/or costs. Select yes for Agree, No for disagree on the drop down menu. Yes
4	**Drug-Free Workplace** Contractor certifies that it has implemented and maintains a drug-free workplace program in accordance with Section 287.087, Florida Statutes. Yes
5	**Conflict of Interest** Contractor certifies that it has disclosed any potential conflict of interest, including whether any City of Pompano Beach employee is an owner, officer, or employee of the Contractor's firm. If such a relationship exists, Contractor shall comply with applicable disclosure requirements pursuant to Chapter 112, Florida Statutes. Failure to disclose may result in disqualification or termination of any resulting contract. No
6	**If yes, provide details.** N/A
7	**Business in Good Standing (Florida Division of Corporations)** Is the proposer an active business entity in good standing with the Florida Division of Corporations (Sunbiz)? Yes

8 **Pricing Compliance**

Bidder acknowledges that all pricing submitted is fully all-inclusive in accordance with Section 4.2 and that no additional charges will be invoiced except as expressly permitted in the ITB.

Yes

9 **Telemetry Compliance**

Bidder acknowledges that no separate charges for telemetry or monitoring will be assessed unless specifically requested and authorized by the City or participating agency.

Yes

10 **Emergency Pricing Disclosure**

Bidder confirms that all emergency and after-hours delivery pricing has been fully disclosed in the pricing section and no additional charges will apply.

Yes

11 **Equipment Compatibility**

Bidder confirms ability to service all participating agency facilities using existing equipment without requiring modifications, upgrades, or replacements.

Yes

12 **Standard Delivery Lead Time (Hours)**

Provide standard delivery lead time (in hours) from order placement.

72

13 **Emergency Response Time (Hours)**

Provide estimated response time for emergency delivery (in hours).

24

14 **48-Hour Requirement**

Bidder confirms ability to meet the 48-hour delivery requirement specified in the ITB under normal operating conditions.

Yes

15 **Primary Supply Source**

Identify primary source of liquid CO2 supply (plant/location).

Star, MI

16 **Backup Supply Source**

Identify backup supply source in the event of disruption.

Miami, FL

17 **Fleet Capacity**

Number of delivery trucks available for this Contract.

25

18 **Years in Business**

Provide the number of years the Bidder has been in business supplying similar products/services.

44

19 **NSF/ANSI 60 Compliance**

Product complies with NSF/ANSI Standard 60.

Yes

20 **Environmental Compliance Certification**

Bidder certifies that it is in compliance with all applicable environmental laws and regulations and has no outstanding violations that would impact its ability to perform this Contract.

Yes

21 **Delivery Coverage Confirmation**

Bidder confirms its ability to service the participating agencies listed in this ITB and agrees to extend the same pricing, terms, and conditions to other governmental entities participating in the SEFL NIGP Cooperative, if requested.

Yes

22 **Cooperative Purchasing**

If awarded, the Bidder may agree to extend the same pricing, terms, and conditions to other governmental entities. Participation is optional and will not be considered in the award. Any such purchases shall be made directly between the vendor and the participating entity, and the City shall not be a party to those transactions.

Yes

Bid Lines

1 **Package Header**

Only Item 1 (Liquid CO2 Delivered) will be used for award evaluation. All other pricing is for informational purposes only.

Quantity: 1 UOM: EA Total: $2,360,000.00

Package Items

1.1 Liquid Carbon Dioxide (CO2), bulk delivery, all-inclusive pricing in accordance with Section 4.2 of the ITB. Pricing shall include all delivery, labor, equipment, and associated costs required to complete delivery.

Quantity is an estimated annual usage for evaluation purposes only and does not represent a guarantee of purchase.

Quantity: 4000 UOM: Ton Unit Price: $590.00 Total: $2,360,000.00

Supplier Notes: $590.00/ton or $0.295/lb

2 **Package Header**

Emergency Delivery Pricing (Not for Award)
(Line excluded from response total)

Quantity: 1 UOM: EA Total: $0.00

Package Items

2.1 Emergency Delivery (within standard hours), per occurrence. Informational pricing only – not used for award.

Quantity: 1 UOM: EA Unit Price: $0.00 Total: $0.00

2.2 After-hours delivery, per occurrence. Informational pricing only – not used for award.

Quantity: 1 UOM: EA Unit Price: $0.00 Total: $0.00

2.3 Weekend/Holiday delivery, per occurrence. Informational pricing only – not used for award.

Quantity: 1 UOM: EA Unit Price: $0.00 Total: $0.00

3 Package Header

Optional/Ancillary Pricing (Not for Award)
(Line excluded from response total)

Quantity: 1 UOM: EA Total: $65.00

Package Items

3.1 Telemetry Equipment/Monitoring (monthly). Informational only – not used for award.

Quantity: 1 UOM: EA Unit Price: $65.00 Total: $65.00

3.2 Tank Rental (monthly). Informational only – not used for award.

Quantity: 1 UOM: EA Unit Price: $0.00 Total: $0.00

Supplier Notes: This varies by tank size and orientation.

3.3 Equipment Installation (one-time). Informational only – not used for award.

Quantity: 1 UOM: EA Unit Price: $0.00 Total: $0.00

Supplier Notes: This varies by tank size and orientation.

Response Total: $2,360,000.00

CERTIFICATE OF LIABILITY INSURANCE

DATE(MM/DD/YYYY)
10/09/2025

THIS CERTIFICATE IS ISSUED AS A MATTER OF INFORMATION ONLY AND CONFERS NO RIGHTS UPON THE CERTIFICATE HOLDER. THIS CERTIFICATE DOES NOT AFFIRMATIVELY OR NEGATIVELY AMEND, EXTEND OR ALTER THE COVERAGE AFFORDED BY THE POLICIES BELOW. THIS CERTIFICATE OF INSURANCE DOES NOT CONSTITUTE A CONTRACT BETWEEN THE ISSUING INSURER(S), AUTHORIZED REPRESENTATIVE OR PRODUCER, AND THE CERTIFICATE HOLDER.

IMPORTANT: If the certificate holder is an ADDITIONAL INSURED, the policy(ies) must have ADDITIONAL INSURED provisions or be endorsed. If SUBROGATION IS WAIVED, subject to the terms and conditions of the policy, certain policies may require an endorsement. A statement on this certificate does not confer rights to the certificate holder in lieu of such endorsement(s).

PRODUCER
Aon Risk Services Central, Inc.
Philadelphia PA Office
100 North 18th Street
16th Floor
Philadelphia PA 19103 USA

CONTACT NAME:
PHONE (A/C. No. Ext): (866) 283-7122 **FAX (A/C. No.):** (800) 363-0105
E-MAIL ADDRESS:

INSURER(S) AFFORDING COVERAGE		NAIC #
INSURER A:	Starr Indemnity & Liability Company	38318
INSURER B:	Starr Specialty Insurance Company	16109
INSURER C:		
INSURER D:		
INSURER E:		
INSURER F:		

INSURED
American Air Liquide Inc.
Airgas, Inc.
259 N. Radnor Chester Road
Radnor PA 19087-5240 USA

COVERAGES **CERTIFICATE NUMBER:** 570116125135 **REVISION NUMBER:**

THIS IS TO CERTIFY THAT THE POLICIES OF INSURANCE LISTED BELOW HAVE BEEN ISSUED TO THE INSURED NAMED ABOVE FOR THE POLICY PERIOD INDICATED. NOTWITHSTANDING ANY REQUIREMENT, TERM OR CONDITION OF ANY CONTRACT OR OTHER DOCUMENT WITH RESPECT TO WHICH THIS CERTIFICATE MAY BE ISSUED OR MAY PERTAIN, THE INSURANCE AFFORDED BY THE POLICIES DESCRIBED HEREIN IS SUBJECT TO ALL THE TERMS, EXCLUSIONS AND CONDITIONS OF SUCH POLICIES. LIMITS SHOWN MAY HAVE BEEN REDUCED BY PAID CLAIMS.

Limits shown are as requested

INSR LTR	TYPE OF INSURANCE	ADDL INSD	SUBR WVD	POLICY NUMBER	POLICY EFF (MM/DD/YYYY)	POLICY EXP (MM/DD/YYYY)	LIMITS	
A	X **COMMERCIAL GENERAL LIABILITY** CLAIMS-MADE / X OCCUR GEN'L AGGREGATE LIMIT APPLIES PER: X POLICY / PRO-JECT / LOC OTHER:			1000090660251	07/01/2025	07/01/2026	EACH OCCURRENCE DAMAGE TO RENTED PREMISES (Ea occurrence) MED EXP (Any one person) PERSONAL & ADV INJURY GENERAL AGGREGATE PRODUCTS - COMP/OP AGG	$2,000,000 $2,000,000 $1,000 $2,000,000 $6,000,000 $6,000,000
A	**AUTOMOBILE LIABILITY** X ANY AUTO OWNED AUTOS ONLY / SCHEDULED AUTOS X HIRED AUTOS ONLY / X NON-OWNED AUTOS ONLY			1000635788251 AOS 1000635789251 MA	07/01/2025 07/01/2025	07/01/2026 07/01/2026	COMBINED SINGLE LIMIT (Ea accident) BODILY INJURY (Per person) BODILY INJURY (Per accident) PROPERTY DAMAGE (Per accident)	$2,000,000
A	**UMBRELLA LIAB** / X OCCUR X **EXCESS LIAB** / CLAIMS-MADE DED / RETENTION			1000095524251	07/01/2025	07/01/2026	EACH OCCURRENCE AGGREGATE	$5,000,000 $5,000,000
A B	**WORKERS COMPENSATION AND EMPLOYERS' LIABILITY** ANY PROPRIETOR / PARTNER / EXECUTIVE OFFICER/MEMBER EXCLUDED? Y/N: N **(Mandatory in NH)** If yes, describe under DESCRIPTION OF OPERATIONS below	N / A		1000004702 FL, MA 1000004704 WI	07/01/2025 07/01/2025	07/01/2026 07/01/2026	X PER STATUTE / OTH-ER E.L. EACH ACCIDENT E.L. DISEASE-EA EMPLOYEE E.L. DISEASE-POLICY LIMIT	$1,000,000 $1,000,000 $1,000,000

DESCRIPTION OF OPERATIONS / LOCATIONS / VEHICLES (ACORD 101, Additional Remarks Schedule, may be attached if more space is required)

Certificate Holder is included as Additional Insured in accordance with the policy provisions of the General Liability and automobile Liability policies.

APPROVED Brittney Dixon
By Brittney Dixon at 2:49 pm, Oct 15, 2025

CERTIFICATE HOLDER

City of Pompano Beach
Building Dept.
100 West Atlantic Blvd.
Pompano Beach FL 33061 USA

CANCELLATION

SHOULD ANY OF THE ABOVE DESCRIBED POLICIES BE CANCELLED BEFORE THE EXPIRATION DATE THEREOF, NOTICE WILL BE DELIVERED IN ACCORDANCE WITH THE POLICY PROVISIONS.

AUTHORIZED REPRESENTATIVE

Aon Risk Services Central, Inc.

Holder Identifier :

Certificate No : 570116125135

©1988-2015 ACORD CORPORATION. All rights reserved

The ACORD name and logo are registered marks of ACORD

AGENCY CUSTOMER ID: 570000093705

LOC #:

ADDITIONAL REMARKS SCHEDULE

AGENCY	NAMED INSURED
Aon Risk Services Central, Inc.	American Air Liquide Inc.
POLICY NUMBER	
See Certificate Number: 570116125135	
CARRIER / NAIC CODE	EFFECTIVE DATE:
See Certificate Number: 570116125135	

ADDITIONAL REMARKS

THIS ADDITIONAL REMARKS FORM IS A SCHEDULE TO ACORD FORM,

FORM NUMBER: ACORD 25 **FORM TITLE:** Certificate of Liability Insurance

WC Continued / Named Insured List

Workers Compensation:

Policy No: 1000004701 (AOS)
Policy Period: 7/01/2025 - 7/01/2026
Insurer: Starr Specialty Insurance Company
Limits: Same as the Workers Compensation and Employers Liability limits shown on the first page of the Certificate

Policy No: 1000004703 (AK, AZ, CT, IA, NC, NJ, NY, VT)
Policy Period: 7/01/2025 - 7/01/2026
Insurer: Starr Specialty Insurance Company
Limits: Same as the Workers Compensation and Employers Liability limits shown on the first page of the Certificate

Policy No: 1000004712 (USL&H)
Policy Period: 7/01/2025 - 7/01/2026
Insurer: Starr Indemnity & Liability Company
Limits: Same as the Workers Compensation and Employers Liability limits shown on the first page of the Certificate

---

NAMED INSUREDS ON THE ABOVE-REFERENCED POLICIES INCLUDE BUT ARE NOT LIMITED TO THE FOLLOWING COMPANIES:

American Air Liquide Inc.
Air Liquide Helium America, Inc.
Air Liquide Advanced Technologies U.S. LLC
Air Liquide America L.P.
Air Liquide USA LLC
Air Liquide Large Industries U.S. LP
Air Liquide Electronics U.S. LP
Air Liquide Global E&C Solutions US Inc.
Air Liquide Technical Services LLC
Air Liquide Global E&C Solutions Mexico LLC
Air Liquide Advanced Materials Inc.
Air Liquide Advanced Materials LLC
Airgas, Inc.
Airgas Carbonic, Inc.
Airgas Doral, Inc.
Airgas Merchant Gases, LLC
Airgas Priority Nitrogen, LLC
Airgas Safety, Inc.
Airgas Specialty Products, Inc.
Airgas USA, LLC
Airgas Nitrogen Services, LLC
Nitrous Oxide Corporation
Red-D-Arc Inc.

© 2008 ACORD CORPORATION. All rights reserved.

The ACORD name and logo are registered marks of ACORD

Insurance Rider

Rider to Agreement between _____ and Airgas USA, LLC, with an Effective Date of [Date]

During the term of this Agreement, Seller shall maintain at its expense the following types and limits of insurance. The total limits of insurance required hereunder can be satisfied by any combination of primary and excess/umbrella liability insurance policies.

(a) Commercial General Liability - $2,000,000 limit per occurrence and $2,000,000 limit in the aggregate. The coverage shall be provided on an occurrence basis and shall include coverage for the following:

- Products/Completed Operations
- Contractual liability

(b) Automobile Liability - $2,000,000 combined single limit per occurrence and $2,000,000 limit in the aggregate. The coverage shall be provided on an occurrence basis and shall include coverage for the following:

- Owned
- Unowned
- Hired

(c) Workers' Compensation and Employers' Liability Insurance - Statutory limits. Employers Liability limits:

- $2,000,000 each accident
- $2,000,000 policy limit for disease
- $2,000,000 each employee for disease.

(d) Additional Insured- With respect to Commercial General Liability and Automobile Liability, Buyer shall be included as an additional insured up to the policy limits specified above, but only with respect to those matters for which Seller is obligated to indemnify Buyer under the terms of this Agreement and only to the extent of Seller's said indemnification obligation.

(e) Subrogation- With respect to Commercial General Liability and Automobile Liability, Seller waives all rights of subrogation in favor of Buyer.

(f) Insurers- All insurance policies required in this Agreement shall be underwritten with insurers that are licensed or registered in the state where operations are conducted and must have a Best rating of at least A- VII or better.

(g) Certificate Holder- The Certificate Holder should read as follows:

Enter Customer Name

Enter Customer address

(h) Proof of coverage- Prior to entering upon Buyer's premises and annually thereafter for so long as this Agreement is in effect, Seller shall furnish Buyer with a certificate of insurance evidencing proof of the insurance above. The certificate of insurance shall be in the Seller's insurance provider's standard format. Should the policies described in the certificate be cancelled or materially changed before the expiration date thereof, notice will be delivered in accordance with the policy provisions.

_____ (Buyer)	AIRGAS USA, LLC (Seller)
Accepted By: _____	Accepted By: _____
Printed Name: _____	Printed Name: _____
Title: _____ Date: _____	Title: _____ Date: _____

Airgas
an Air Liquide company

Quality Management Systems
Confidential - For Customer Use Only

Certificate of Conformance

Effective Date: January 1, 2026 - December 31, 2028

The liquid carbon dioxide produced at our plants meets and/or exceeds the specification limits set by the American Water Works Association (AWWA) B510-06 and B510-18, Quality Verification Level H.

Liquid Carbon Dioxide	
Test Requirement	**Specification**
Identification	Pass
Carbon Dioxide (Assay)	99.50 % Min
Acetaldehyde	0.50 ppm
Carbon Monoxide	10.0 ppm
Carbonyl Sulfide	0.50 ppm
Hydrogen Sulfide	0.50 ppm
Sulfur Dioxide	5.00 ppm
Total Sulfur	0.50 ppm
Nitric Oxide & Nitrogen Dioxide	5.00 ppm
Oxygen	50.0 ppm
Moisture (Water)	20.0 ppm (-68°F Dewpoint)
Total Hydrocarbon Content (as methane)	50.0 ppm
Non Volatile Residues (wt/wt)	10.0 ppm
Odor/Taste	No foreign odor/taste

Specification limit in ppm (v\v) maximum allowable unless otherwise stated. N/A: Not Applicable.

Approved By:

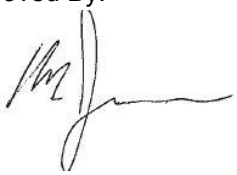

Mark Jorgensen
Airgas USA, LLC
Sr. Director of Quality & Food/Pharma Compliance

07/03/2025
Rev 2

SAFETY DATA SHEET

Carbon Dioxide, Refrigerated Liquid

Airgas
an Air Liquide company

Section 1. Identification

GHS product identifier : Carbon Dioxide, Refrigerated Liquid

Chemical name : Carbon Dioxide,Refrigertaed Liquid

Other means of identification : Carbon Dioxide Liquid, Carbon Dioxide, Refrigerated Liquid, Carbon Dioxide Liquid USP

Product type : Liquid.

Product use : Synthetic/Analytical chemistry.

Synonym : Carbon Dioxide Liquid, Carbon Dioxide, Refrigerated Liquid, Carbon Dioxide Liquid USP

SDS # : 001181

Supplier's details : Airgas USA, LLC and its affiliates
259 North Radnor-Chester Road
Suite 100
Radnor, PA 19087-5283
1-610-687-5253

24-hour telephone : 1-866-734-3438

Section 2. Hazards identification

OSHA/HCS status : This material is considered hazardous by the OSHA Hazard Communication Standard (29 CFR 1910.1200).

Classification of the substance or mixture : GASES UNDER PRESSURE - Refrigerated liquefied gas
Simple asphyxiant.

GHS label elements

Hazard pictograms :



Signal word : Warning

Hazard statements : Contains refrigerated gas; may cause cryogenic burns or injury.
May increase respiration and heart rate.

Precautionary statements

General : Read label before use. Keep out of reach of children. If medical advice is needed, have product container or label at hand. Always keep container in upright position. Do not change or force fit connections. Avoid spills. Do not walk or roll equipment over spills.

Prevention : Wear cold insulating gloves and either face shield or eye protection.

Response : Thaw frosted parts with lukewarm water. Do not rub affected area. Get immediate medical advice or attention.

Disposal : Not applicable.

Hazards not otherwise classified : None known.

Section 3. Composition/information on ingredients

Substance/mixture : Substance

Chemical name : Carbon Dioxide,Refrigertaed Liquid

Other means of identification : Carbon Dioxide Liquid, Carbon Dioxide, Refrigerated Liquid, Carbon Dioxide Liquid USP

Product code : 001181

CAS number/other identifiers

CAS number : 124-38-9

Ingredient name	%	CAS number
Carbon Dioxide	100	124-38-9

Any concentration shown as a range is to protect confidentiality or is due to batch variation.

There are no additional ingredients present which, within the current knowledge of the supplier and in the concentrations applicable, are classified as hazardous to health or the environment and hence require reporting in this section.

Occupational exposure limits, if available, are listed in Section 8.

Section 4. First aid measures

Description of necessary first aid measures

Eye contact : Immediately flush eyes with plenty of water, occasionally lifting the upper and lower eyelids. Check for and remove any contact lenses. Continue to rinse for at least 10 minutes. Get medical attention if irritation occurs.

Inhalation : Remove victim to fresh air and keep at rest in a position comfortable for breathing. If not breathing, if breathing is irregular or if respiratory arrest occurs, provide artificial respiration or oxygen by trained personnel. It may be dangerous to the person providing aid to give mouth-to-mouth resuscitation. Get medical attention if adverse health effects persist or are severe. If unconscious, place in recovery position and get medical attention immediately. Maintain an open airway. Loosen tight clothing such as a collar, tie, belt or waistband.

Skin contact : Flush contaminated skin with plenty of water. Remove contaminated clothing and shoes. Get medical attention if symptoms occur. Wash clothing before reuse. Clean shoes thoroughly before reuse.

Ingestion : Wash out mouth with water. Remove dentures if any. Remove victim to fresh air and keep at rest in a position comfortable for breathing. If material has been swallowed and the exposed person is conscious, give small quantities of water to drink. Stop if the exposed person feels sick as vomiting may be dangerous. Do not induce vomiting unless directed to do so by medical personnel. If vomiting occurs, the head should be kept low so that vomit does not enter the lungs. Get medical attention if adverse health effects persist or are severe. Never give anything by mouth to an unconscious person. If unconscious, place in recovery position and get medical attention immediately. Maintain an open airway. Loosen tight clothing such as a collar, tie, belt or waistband.

Most important symptoms/effects, acute and delayed

Potential acute health effects

Eye contact : Extremely cold material.

Inhalation : No known significant effects or critical hazards.

Skin contact : Extremely cold material.

Frostbite : Try to warm up the frozen tissues and seek medical attention.

Ingestion : No known significant effects or critical hazards.

Over-exposure signs/symptoms

Eye contact : No specific data.

Inhalation : No specific data.

Skin contact : No specific data.

Ingestion : No specific data.

Section 4. First aid measures

Indication of immediate medical attention and special treatment needed, if necessary

Notes to physician : Treat symptomatically. Contact poison treatment specialist immediately if large quantities have been ingested or inhaled.

Specific treatments : No specific treatment.

Protection of first-aiders : No action shall be taken involving any personal risk or without suitable training. It may be dangerous to the person providing aid to give mouth-to-mouth resuscitation.

See toxicological information (Section 11)

Section 5. Fire-fighting measures

Extinguishing media

Suitable extinguishing media : Use an extinguishing agent suitable for the surrounding fire.

Unsuitable extinguishing media : None known.

Specific hazards arising from the chemical : In a fire or if heated, a pressure increase will occur and the container may burst.

Hazardous thermal decomposition products : Decomposition products may include the following materials:
carbon dioxide
carbon monoxide

Special protective actions for fire-fighters : Promptly isolate the scene by removing all persons from the vicinity of the incident if there is a fire. No action shall be taken involving any personal risk or without suitable training.

Special protective equipment for fire-fighters : Fire-fighters should wear appropriate protective equipment and self-contained breathing apparatus (SCBA) with a full face-piece operated in positive pressure mode.

Section 6. Accidental release measures

Personal precautions, protective equipment and emergency procedures

For non-emergency personnel : No action shall be taken involving any personal risk or without suitable training. Evacuate surrounding areas. Keep unnecessary and unprotected personnel from entering. Do not touch or walk through spilled material. Avoid breathing vapor or mist. Provide adequate ventilation. Wear appropriate respirator when ventilation is inadequate. Put on appropriate personal protective equipment.

For emergency responders : If specialized clothing is required to deal with the spillage, take note of any information in Section 8 on suitable and unsuitable materials. See also the information in "For non-emergency personnel".

Environmental precautions : Avoid dispersal of spilled material and runoff and contact with soil, waterways, drains and sewers. Inform the relevant authorities if the product has caused environmental pollution (sewers, waterways, soil or air).

Methods and materials for containment and cleaning up

Small spill : Stop leak if without risk. Move containers from spill area. Dilute with water and mop up if water-soluble. Alternatively, or if water-insoluble, absorb with an inert dry material and place in an appropriate waste disposal container. Dispose of via a licensed waste disposal contractor.

Section 6. Accidental release measures

Large spill : Stop leak if without risk. Move containers from spill area. Approach release from upwind. Prevent entry into sewers, water courses, basements or confined areas. Wash spillages into an effluent treatment plant or proceed as follows. Contain and collect spillage with non-combustible, absorbent material e.g. sand, earth, vermiculite or diatomaceous earth and place in container for disposal according to local regulations (see Section 13). Dispose of via a licensed waste disposal contractor. Contaminated absorbent material may pose the same hazard as the spilled product. Note: see Section 1 for emergency contact information and Section 13 for waste disposal.

Section 7. Handling and storage

Precautions for safe handling

Protective measures : Put on appropriate personal protective equipment (see Section 8). Contains refrigerated gas. Avoid breathing vapor or mist. Avoid contact with eyes, skin and clothing. Do not ingest. Empty containers retain product residue and can be hazardous. Keep in the original container or an approved alternative made from a compatible material, kept tightly closed when not in use. Do not reuse container.

Advice on general occupational hygiene : Eating, drinking and smoking should be prohibited in areas where this material is handled, stored and processed. Workers should wash hands and face before eating, drinking and smoking. Remove contaminated clothing and protective equipment before entering eating areas. See also Section 8 for additional information on hygiene measures.

Conditions for safe storage, including any incompatibilities : Store in accordance with local regulations. Store in original container protected from direct sunlight in a dry, cool and well-ventilated area, away from incompatible materials (see Section 10) and food and drink. Keep container tightly closed and sealed until ready for use. Containers that have been opened must be carefully resealed and kept upright to prevent leakage. Do not store in unlabeled containers. Use appropriate containment to avoid environmental contamination. See Section 10 for incompatible materials before handling or use.

Section 8. Exposure controls/personal protection

Control parameters

Occupational exposure limits

Ingredient name	Exposure limits
Carbon Dioxide	**ACGIH TLV (United States, 3/2017). Oxygen Depletion [Asphyxiant].** STEL: 54000 mg/m³ 15 minutes. STEL: 30000 ppm 15 minutes. TWA: 9000 mg/m³ 8 hours. TWA: 5000 ppm 8 hours. **NIOSH REL (United States, 10/2016).** STEL: 54000 mg/m³ 15 minutes. STEL: 30000 ppm 15 minutes. TWA: 9000 mg/m³ 10 hours. TWA: 5000 ppm 10 hours. **OSHA PEL (United States, 6/2016).** TWA: 9000 mg/m³ 8 hours. TWA: 5000 ppm 8 hours. **OSHA PEL 1989 (United States, 3/1989).** STEL: 54000 mg/m³ 15 minutes. STEL: 30000 ppm 15 minutes. TWA: 18000 mg/m³ 8 hours. TWA: 10000 ppm 8 hours.

Appropriate engineering controls : Good general ventilation should be sufficient to control worker exposure to airborne contaminants.

Section 8. Exposure controls/personal protection

Environmental exposure controls : Emissions from ventilation or work process equipment should be checked to ensure they comply with the requirements of environmental protection legislation. In some cases, fume scrubbers, filters or engineering modifications to the process equipment will be necessary to reduce emissions to acceptable levels.

Individual protection measures

Hygiene measures : Wash hands, forearms and face thoroughly after handling chemical products, before eating, smoking and using the lavatory and at the end of the working period. Appropriate techniques should be used to remove potentially contaminated clothing. Wash contaminated clothing before reusing. Ensure that eyewash stations and safety showers are close to the workstation location.

Eye/face protection : Safety eyewear complying with an approved standard should be used when a risk assessment indicates this is necessary to avoid exposure to liquid splashes, mists, gases or dusts. If contact is possible, the following protection should be worn, unless the assessment indicates a higher degree of protection: safety glasses with side-shields.

Skin protection

Hand protection : Chemical-resistant, impervious gloves complying with an approved standard should be worn at all times when handling chemical products if a risk assessment indicates this is necessary. Considering the parameters specified by the glove manufacturer, check during use that the gloves are still retaining their protective properties. It should be noted that the time to breakthrough for any glove material may be different for different glove manufacturers. In the case of mixtures, consisting of several substances, the protection time of the gloves cannot be accurately estimated.

Body protection : Personal protective equipment for the body should be selected based on the task being performed and the risks involved and should be approved by a specialist before handling this product.

Other skin protection : Appropriate footwear and any additional skin protection measures should be selected based on the task being performed and the risks involved and should be approved by a specialist before handling this product.

Respiratory protection : Based on the hazard and potential for exposure, select a respirator that meets the appropriate standard or certification. Respirators must be used according to a respiratory protection program to ensure proper fitting, training, and other important aspects of use.

Section 9. Physical and chemical properties

Appearance

Physical state : Gas or Liquid.

Color : Colorless.

Odor : Odorless.

Odor threshold : Not available.

pH : Not available.

Melting point : Sublimation temperature: -79°C (-110.2 to °F)

Boiling point : Not available.

Critical temperature : 30.85°C (87.5°F)

Flash point : [Product does not sustain combustion.]

Evaporation rate : Not available.

Flammability (solid, gas) : Not available.

Lower and upper explosive (flammable) limits : Not available.

Vapor pressure : 5720 kPa (42903.49 mm Hg) [room temperature]

Vapor density : 1.53 (Air = 1) Liquid Density@BP: Solid density = 97.5 lb/ft3 (1562 kg/m3)

Specific Volume (ft^3/lb) : 8.7719

Gas Density (lb/ft^3) : 0.114

Relative density : 0.0019

Section 9. Physical and chemical properties

Solubility : Not available.

Solubility in water : Not available.

Partition coefficient: n-octanol/water : 0.83

Auto-ignition temperature : Not available.

Decomposition temperature : Not available.

Viscosity : Not available.

Flow time (ISO 2431) : Not available.

Molecular weight : 44.01 g/mole

Section 10. Stability and reactivity

Reactivity : No specific test data related to reactivity available for this product or its ingredients.

Chemical stability : The product is stable.

Possibility of hazardous reactions : Under normal conditions of storage and use, hazardous reactions will not occur.

Conditions to avoid : No specific data.

Incompatible materials : No specific data.

Hazardous decomposition products : Under normal conditions of storage and use, hazardous decomposition products should not be produced.

Hazardous polymerization : Under normal conditions of storage and use, hazardous polymerization will not occur.

Section 11. Toxicological information

Information on toxicological effects

Acute toxicity

Not available.

Irritation/Corrosion

Not available.

Sensitization

Not available.

Mutagenicity

Not available.

Carcinogenicity

Not available.

Reproductive toxicity

Not available.

Teratogenicity

Not available.

Specific target organ toxicity (single exposure)

Not available.

Specific target organ toxicity (repeated exposure)

Section 11. Toxicological information

Not available.

Aspiration hazard

Not available.

Information on the likely routes of exposure : Not available.

Potential acute health effects

Eye contact : Extremely cold material.

Inhalation : No known significant effects or critical hazards.

Skin contact : Extremely cold material.

Ingestion : No known significant effects or critical hazards.

Symptoms related to the physical, chemical and toxicological characteristics

Eye contact : No specific data.

Inhalation : No specific data.

Skin contact : No specific data.

Ingestion : No specific data.

Delayed and immediate effects and also chronic effects from short and long term exposure

Short term exposure

Potential immediate effects : Not available.

Potential delayed effects : Not available.

Long term exposure

Potential immediate effects : Not available.

Potential delayed effects : Not available.

Potential chronic health effects

Not available.

General : No known significant effects or critical hazards.

Carcinogenicity : No known significant effects or critical hazards.

Mutagenicity : No known significant effects or critical hazards.

Teratogenicity : No known significant effects or critical hazards.

Developmental effects : No known significant effects or critical hazards.

Fertility effects : No known significant effects or critical hazards.

Numerical measures of toxicity

Acute toxicity estimates

Not available.

Section 12. Ecological information

Toxicity

Not available.

Persistence and degradability

Not available.

Bioaccumulative potential

Product/ingredient name	$LogP_{ow}$	BCF	Potential
Carbon Dioxide	0.83	-	low

Mobility in soil

Soil/water partition coefficient (K_{OC}) : Not available.

Other adverse effects : No known significant effects or critical hazards.

Section 13. Disposal considerations

Disposal methods : The generation of waste should be avoided or minimized wherever possible. Disposal of this product, solutions and any by-products should at all times comply with the requirements of environmental protection and waste disposal legislation and any regional local authority requirements. Dispose of surplus and non-recyclable products via a licensed waste disposal contractor. Waste should not be disposed of untreated to the sewer unless fully compliant with the requirements of all authorities with jurisdiction. Waste packaging should be recycled. Incineration or landfill should only be considered when recycling is not feasible. This material and its container must be disposed of in a safe way. Care should be taken when handling emptied containers that have not been cleaned or rinsed out. Empty containers or liners may retain some product residues. Avoid dispersal of spilled material and runoff and contact with soil, waterways, drains and sewers.

Section 14. Transport information

	DOT	TDG	Mexico	IMDG	IATA
UN number	UN2187	UN2187	UN2187	UN2187	UN2187
UN proper shipping name	Carbon Dioxide, Refrigerated Liquid	Carbon Dioxide, Refrigerated Liquid	Carbon Dioxide, Refrigerated Liquid	Carbon Dioxide, Refrigerated Liquid	Carbon Dioxide, Refrigerated Liquid
Transport hazard class(es)	2.2 	2.2 	2.2 	2.2 	2.2 
Packing group	-	-	-	-	-
Environmental hazards	No.	No.	No.	No.	No.

"Refer to CFR 49 (or authority having jurisdiction) to determine the information required for shipment of the product."

Additional information

DOT Classification : **Limited quantity** Yes.
Quantity limitation Passenger aircraft/rail: 75 kg. Cargo aircraft: 150 kg.

Section 14. Transport information

TDG Classification : Product classified as per the following sections of the Transportation of Dangerous Goods Regulations: 2.13-2.17 (Class 2).
Explosive Limit and Limited Quantity Index 0.125
Passenger Carrying Road or Rail Index 75

IATA : **Quantity limitation** Passenger and Cargo Aircraft: 75 kg. Cargo Aircraft Only: 150 kg.

Special precautions for user : **Transport within user's premises:** always transport in closed containers that are upright and secure. Ensure that persons transporting the product know what to do in the event of an accident or spillage.

Transport in bulk according to IMO instruments : Not available.

Section 15. Regulatory information

U.S. Federal regulations : **TSCA 8(a) CDR Exempt/Partial exemption**: This material is listed or exempted.

Clean Air Act Section 112 (b) Hazardous Air Pollutants (HAPs) : Not listed

Clean Air Act Section 602 Class I Substances : Not listed

Clean Air Act Section 602 Class II Substances : Not listed

DEA List I Chemicals (Precursor Chemicals) : Not listed

DEA List II Chemicals (Essential Chemicals) : Not listed

SARA 302/304

Composition/information on ingredients

No products were found.

SARA 304 RQ : Not applicable.

SARA 311/312

Classification : Refer to Section 2: Hazards Identification of this SDS for classification of substance.

State regulations

Massachusetts : This material is listed.

New York : This material is not listed.

New Jersey : This material is listed.

Pennsylvania : This material is listed.

California Prop. 65

This product does not require a Safe Harbor warning under California Prop. 65.

International regulations

Chemical Weapon Convention List Schedules I, II & III Chemicals

Not listed.

Montreal Protocol

Not listed.

Stockholm Convention on Persistent Organic Pollutants

Not listed.

Rotterdam Convention on Prior Informed Consent (PIC)

Section 15. Regulatory information

Not listed.

UNECE Aarhus Protocol on POPs and Heavy Metals

Not listed.

Inventory list

Australia	:	This material is listed or exempted.
Canada	:	This material is listed or exempted.
China	:	This material is listed or exempted.
Europe	:	This material is listed or exempted.
Japan	:	**Japan inventory (ENCS)**: This material is listed or exempted. **Japan inventory (ISHL)**: This material is listed or exempted.
New Zealand	:	This material is listed or exempted.
Philippines	:	This material is listed or exempted.
Republic of Korea	:	This material is listed or exempted.
Taiwan	:	This material is listed or exempted.
Thailand	:	Not determined.
Turkey	:	This material is listed or exempted.
United States	:	Not determined.
Viet Nam	:	Not determined.

Section 16. Other information

Hazardous Material Information System (U.S.A.)

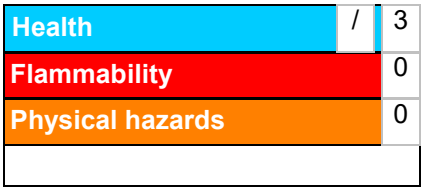

Caution: HMIS® ratings are based on a 0-4 rating scale, with 0 representing minimal hazards or risks, and 4 representing significant hazards or risks. Although HMIS® ratings and the associated label are not required on SDSs or products leaving a facility under 29 CFR 1910.1200, the preparer may choose to provide them. HMIS® ratings are to be used with a fully implemented HMIS® program. HMIS® is a registered trademark and service mark of the American Coatings Association, Inc.

The customer is responsible for determining the PPE code for this material. For more information on HMIS® Personal Protective Equipment (PPE) codes, consult the HMIS® Implementation Manual.

National Fire Protection Association (U.S.A.)



Reprinted with permission from NFPA 704-2001, Identification of the Hazards of Materials for Emergency Response Copyright ©1997, National Fire Protection Association, Quincy, MA 02269. This reprinted material is not the complete and official position of the National Fire Protection Association, on the referenced subject which is represented only by the standard in its entirety.

Copyright ©2001, National Fire Protection Association, Quincy, MA 02269. This warning system is intended to be interpreted and applied only by properly trained individuals to identify fire, health and reactivity hazards of chemicals. The user is referred to certain limited number of chemicals with recommended classifications in NFPA 49 and NFPA 325, which would be used as a guideline only. Whether the chemicals are classified by NFPA or not, anyone using the 704 systems to classify chemicals does so at their own risk.

Procedure used to derive the classification

Section 16. Other information

Classification	Justification
GASES UNDER PRESSURE - Refrigerated liquefied gas	Expert judgment

History

Date of printing : 5/1/2020

Date of issue/Date of revision : 5/1/2020

Date of previous issue : 2/3/2018

Version : 1

Key to abbreviations : ATE = Acute Toxicity Estimate
BCF = Bioconcentration Factor
GHS = Globally Harmonized System of Classification and Labelling of Chemicals
IATA = International Air Transport Association
IBC = Intermediate Bulk Container
IMDG = International Maritime Dangerous Goods
LogPow = logarithm of the octanol/water partition coefficient
MARPOL = International Convention for the Prevention of Pollution From Ships, 1973 as modified by the Protocol of 1978. ("Marpol" = marine pollution)
UN = United Nations

References : Not available.

Notice to reader

To the best of our knowledge, the information contained herein is accurate. However, neither the above-named supplier, nor any of its subsidiaries, assumes any liability whatsoever for the accuracy or completeness of the information contained herein.
Final determination of suitability of any material is the sole responsibility of the user. All materials may present unknown hazards and should be used with caution. Although certain hazards are described herein, we cannot guarantee that these are the only hazards that exist.

Water Quality Association
Gold Seal Certificate

Airgas USA LLC

259 N. Radnor-Chester Road, Suite 220

Radnor, PA United States

Facility: Airgas Star

Certification Date: December 30, 2021

Authorized By:

Caren L. Settler
Process Improvement Manager

Water Quality Association
2375 Cabot Drive
Lisle, IL 60532, USA

Products are evaluated according to Product Certification Scheme Type 5, as defined in ISO/IEC 17067 (current version).
This Certificate, or any part thereof, may not be used in a misleading manner and validation of its use is contingent upon the Official WQA web-listing.
Please contact your Project Leader for product expiration terms. All Standards referenced in the Product Certification Schemes by Standard Name.

Revision: 09/27/2021

FORM.12046

Water Quality Association Official Gold Seal Listing

Granted to the following company:	Airgas USA LLC 259 N. Radnor-Chester Road, Suite 220 Radnor, PA 19087 United States
For the Facility Located at:	Airgas Star 217 Andrew Jackson Circle Star, MS 39167 United States

The WQA Gold Seal Certification Department has issued certification for the following model(s) to the standard(s) below. Only models that appear in the official listing are authorized to bear the WQA Gold Seal.

NSF/ANSI/CAN 60 - 2018: Drinking Water Treatment Chemicals - Health Effects

Carbon Dioxide

Notice: To request any changes to the certified model(s), please request a Change to Certified Product (CCP) form. Examples include any change to the wetted parts or formulations such as supplier or material types, literature, or a change in company name. This list is not all inclusive. Failure to submit documentation regarding changes may result in non-compliance with the standard(s) as well as de-listing of the affected models.

Airgas
an Air Liquide company

Quality Management Systems
Confidential - For Customer Use Only

Certificate of Conformance

Effective Date: January 1, 2026 - December 31, 2028

The liquid carbon dioxide produced at the Star, MS plant meets and/or exceeds the specification limits set by the Compressed Gas Association G-6.2-2011, Quality Verification Level I (Beverage Grade) & meets and conforms to all of the requirements specified in the ***Carbon Dioxide Quality Guidelines and Analytical Procedure Bibliography***, published by the International Society of Beverage Technologists (ISBT), which exceeds the specifications of the United States Pharmacopeia and the Food Chemicals Codex (Food Processing).

Note: The feedgas source stream is from a Natural CO2 Well.

Liquid Carbon Dioxide			
Test Requirement	**Specification**	**Typical Result**	**Detection Limit**
Carbon Dioxide	99.90 % Min.	99.97 % - 99.99+ %	± 0.01 %
Water (Moisture)	20.0 ppm (-68°F Dewpoint)	< 5.0 ppm (-85°F Dewpoint)	1.0 ppm (-105°F Dewpoint)
Oxygen	30.0 ppm	< 5.0 ppm	0.05 ppm
Carbon Monoxide	10.0 ppm	< 2.0 ppm	2.0 ppm
Methanol	10.0 ppm	< 2.0 ppm	1.0 ppm
Nitric Oxide	2.5 ppm	< 0.5 ppm	0.5 ppm
Nitrogen Dioxide	2.5 ppm	< 0.5 ppm	0.5 ppm
Total Sulfur (All Sulfurs)	0.100 ppm	< 0.010 ppm	0.002 ppm
Acetaldehyde	0.200 ppm	< 0.050 ppm	0.050 ppm
Ammonia	2.50 ppm	< 2.00 ppm	2.00 ppm
Benzene	0.020 ppm	< 0.005 ppm	0.005 ppm
Oil (wt/wt)	5.0 ppm	< 1.0 ppm	1.0 ppm
Total Volatile Hydrocarbons (as Methane) (including 20 ppm v/v max as total non-methane hydrocarbons)	50.0 ppm	< 10.0 ppm	1.0 ppm
Non Volatile Residues (wt/wt)	10.0 ppm	< 2.0 ppm	1.0 ppm
Odor/Taste/Turbidity	No foreign odor/taste	No foreign odor/taste	N/A
Snow Test (Odor of solid Carbon Dioxide)	No foreign odor	No foreign odor	N/A

Specification limit is in ppm (v\v) maximum allowable unless otherwise stated. N/A: Not Applicable.

Approved By:



Mark Jorgensen
Airgas USA, LLC
Sr. Director of Quality & Food/Pharma Compliance

The Carbon Dioxide lot delivered on the listed Delivery Ticket/Lot & Batch Number was produced in accordance with Airgas Procedures and meets the specifications listed above.

Delivery Ticket Number	Lot Number	Driver's Signature	Date

07/03/2025
Rev 2

Reference List/ Client List Airgas USA, LLC

- Agency/Company Name: Miami-Dade County
- Contact Person: Marcelo Cam
- Title: Procurement Contracting Officer
- Phone Number: (305) 375-4258
- Email Address: marcelo.com@miamidade.gov
- Brief description of services provided: Bulk CO2 Product

- Agency/Company Name: The Island Water Association, Inc.
- Contact Person: Rhonda Geisler
- Title: Purchasing Coordinator
- Phone Number: (239) 395-4832
- Email Address: Rhonda@islandwater.com
- Brief description of services provided: Bulk CO2 Product

- Agency/Company Name: City of Stuart
- Contact Person: Michael Woodside
- Title: Superintendent
- Phone Number: (772) 260-4731
- Email Address: mwoodside@ci.stuart.fl.us
- Brief description of services provided: Bulk CO2 Product

Detail by Entity Name

Foreign Limited Liability Company
AIRGAS USA, LLC

Filing Information

Document Number	M11000005550
FEI/EIN Number	45-3153734
Date Filed	11/03/2011
State	DE
Status	ACTIVE
Last Event	LC AMENDMENT
Event Date Filed	11/22/2022
Event Effective Date	10/11/2017

Principal Address

259 N. RADNOR-CHESTER RD.
SUITE 300
Radnor, PA 19087-5283

Changed: 06/16/2026

Mailing Address

259 N. RADNOR-CHESTER RD.
SUITE 300
Radnor, PA 19087-5283

Changed: 06/16/2026

Registered Agent Name & Address

C T CORPORATION SYSTEM
1200 SOUTH PINE ISLAND ROAD
PLANTATION, FL 33324

Name Changed: 06/17/2026

Authorized Person(s) Detail

Name & Address

Title CEO, Manager

Fioranelli, Marcelo
259 N. RADNOR-CHESTER RD.
SUITE 300
Radnor, PA 19087-5283

Title CFO, Manager

Hernandez, Jennifer
259 N. RADNOR-CHESTER RD.
SUITE 300
Radnor, PA 19087-5283

Title President, Manager

de la Garza, Monica Melve
259 N. RADNOR-CHESTER RD.
SUITE 300
Radnor, PA 19087-5283

Title Secretary

Dailey, Michael
259 N. RADNOR-CHESTER RD.
SUITE 300
Radnor, PA 19087-5283

Title Assistant Secretary, Vice President - Tax

Kim, Anh
259 N. RADNOR-CHESTER RD.
SUITE 300
Radnor, PA 19087-5283

Title Assistant Secretary

Miller, Susan
259 N. RADNOR-CHESTER RD.
SUITE 300
Radnor, PA 19087-5283

Title Treasurer

Saront-Eisner, Tamara
259 N. RADNOR-CHESTER RD.
SUITE 300
Radnor, PA 19087-5283

Title President - South Division

Sheehan, John F.
259 N. RADNOR-CHESTER RD.
SUITE 300

Radnor, PA 19087-5283

Annual Reports

Report Year	Filed Date
2026	04/09/2026
2026	06/16/2026
2026	06/17/2026

Document Images

06/17/2026 -- AMENDED ANNUAL REPORT	View image in PDF format
06/16/2026 -- AMENDED ANNUAL REPORT	View image in PDF format
04/09/2026 -- ANNUAL REPORT	View image in PDF format
04/08/2025 -- AMENDED ANNUAL REPORT	View image in PDF format
03/13/2025 -- ANNUAL REPORT	View image in PDF format
11/18/2024 -- AMENDED ANNUAL REPORT	View image in PDF format
04/02/2024 -- ANNUAL REPORT	View image in PDF format
02/24/2023 -- ANNUAL REPORT	View image in PDF format
11/22/2022 -- LC Amendment	View image in PDF format
03/29/2022 -- ANNUAL REPORT	View image in PDF format
04/26/2021 -- ANNUAL REPORT	View image in PDF format
05/01/2020 -- ANNUAL REPORT	View image in PDF format
04/18/2019 -- ANNUAL REPORT	View image in PDF format
06/27/2018 -- ANNUAL REPORT	View image in PDF format
10/11/2017 -- REINSTATEMENT	View image in PDF format
10/03/2016 -- Merger	View image in PDF format
04/30/2016 -- ANNUAL REPORT	View image in PDF format
05/27/2015 -- AMENDED ANNUAL REPORT	View image in PDF format
04/11/2015 -- ANNUAL REPORT	View image in PDF format
04/22/2014 -- ANNUAL REPORT	View image in PDF format
04/13/2013 -- ANNUAL REPORT	View image in PDF format
04/13/2012 -- ANNUAL REPORT	View image in PDF format
11/03/2011 -- Foreign Limited	View image in PDF format

Florida Department of State, Division of Corporations

Legislation Details (With Text)

File #:	26-412 **Version:** 1	**Name:**	
Type:	Approval Request / Consent Agenda	**Status:**	Consent Agenda Ready
File created:	6/11/2026	**In control:**	City Commission
On agenda:	6/23/2026	**Final action:**	
Title:	Approval to award ITB26-036 Carbon Dioxide, Liquid, Bulk Delivery (Co-operative Bid) to the responsive, responsible bidder Airgas USA, LLC, to establish an annual contract. The estimated annual cost to the City for carbon dioxide is $220,000. (Fiscal Impact: $220,000)		
Sponsors:			
Indexes:			
Code sections:			
Attachments:	1. Purchasing Memo Award ITB26-036 Carbon Dioxide Liquid Bulk Delivery Co-op Bid.pdf, 2. City Manager Memo for Carbon Dioxide Liquid Bulk Delivery.pdf, 3. Bid Award Recommendation.pdf, 4. ITB26-036 Carbon Dioxide Liquid Bulk Delivery.pdf, 5. Certificate of Compliance.pdf		

Date	Ver.	Action By	Action	Result

Approval to award ITB26-036 Carbon Dioxide, Liquid, Bulk Delivery (Co-operative Bid) to the responsive, responsible bidder Airgas USA, LLC, to establish an annual contract. The estimated annual cost to the City for carbon dioxide is $220,000.
(Fiscal Impact: $220,000)

(**Staff Contact:** Renuka Mohammed)

Summary Explanation/Background:
The Utilities Department requests City Commission approval to award ITB26-036 - Carbon Dioxide Liquid Bulk Delivery to Airgas USA, LLC (Airgas, Inc.) for the supply and delivery of bulk liquid carbon dioxide used in the City's water treatment process. The solicitation was issued on April 16, 2026, with the City of Pompano Beach serving as the lead agency for the Southeast Florida Chapter of the National Institute of Governmental Purchasing (SEFL NIGP) Cooperative, which included participating agencies throughout Miami-Dade, Broward, and Palm Beach Counties. The solicitation closed on May 18, 2026, and two bids were received from Airgas USA, LLC and Broward Nelson Fountain Service.

Following evaluation by the Procurement and Contracts Department and the Utilities Department, Airgas USA, LLC was determined to be the lowest responsive and responsible bidder and to have met all solicitation requirements. The estimated annual expenditures are approximately $220,000, funded through the Utilities Department operating budget. The contract will provide a reliable supply of carbon dioxide essential for potable water treatment operations. The contract is for an initial three-year term with an additional two-year renewal option. Approval supports the City's commitment to providing safe, reliable, and sustainable potable water service

Origin of request for this action: Utilities
Fiscal impact and source of funding: As needed, from budgeted funds in account 412-3320-533.52-05 Operating Supplies / Chemical / Horticultural

Strategic Plan Initiative

Strategic Plan: Goal 4 (Item 6): Superior Capacity for Growth through Quality, Sustainable Development - Expand and enhance utility infrastructure - water, wastewater, and stormwater.

Comprehensive Plan: Goal 7A: Provide safe, reliable, sustainable, cost-effective potable water to all residents and businesses within the City's water utility service areas and make the capital improvements necessary to maintain or improve potable water services

powered by Legistar™

CERTIFICATE OF LIABILITY INSURANCE

DATE(MM/DD/YYYY) 10/16/2026

THIS CERTIFICATE IS ISSUED AS A MATTER OF INFORMATION ONLY AND CONFERS NO RIGHTS UPON THE CERTIFICATE HOLDER. THIS CERTIFICATE DOES NOT AFFIRMATIVELY OR NEGATIVELY AMEND, EXTEND OR ALTER THE COVERAGE AFFORDED BY THE POLICIES BELOW. THIS CERTIFICATE OF INSURANCE DOES NOT CONSTITUTE A CONTRACT BETWEEN THE ISSUING INSURER(S), AUTHORIZED REPRESENTATIVE OR PRODUCER, AND THE CERTIFICATE HOLDER.

IMPORTANT: If the certificate holder is an ADDITIONAL INSURED, the policy(ies) must have ADDITIONAL INSURED provisions or be endorsed. If SUBROGATION IS WAIVED, subject to the terms and conditions of the policy, certain policies may require an endorsement. A statement on this certificate does not confer rights to the certificate holder in lieu of such endorsement(s).

PRODUCER
Aon Risk Services Central, Inc.
Philadelphia PA Office
100 North 18th Street
16th Floor
Philadelphia PA 19103 USA

CONTACT NAME:
PHONE (A/C. No. Ext): (866) 283-7122 **FAX (A/C. No.):** (800) 363-0105
E-MAIL ADDRESS:

INSURER(S) AFFORDING COVERAGE		NAIC #
INSURER A:	Starr Indemnity & Liability Company	38318
INSURER B:	Starr Specialty Insurance Company	16109
INSURER C:	Indian Harbor Insurance Company	36940
INSURER D:		
INSURER E:		
INSURER F:		

INSURED
American Air Liquide Inc.
Airgas, Inc.
259 N. Radnor Chester Road
Radnor PA 19087-5240 USA

COVERAGES **CERTIFICATE NUMBER:** 570123815928 **REVISION NUMBER:**

THIS IS TO CERTIFY THAT THE POLICIES OF INSURANCE LISTED BELOW HAVE BEEN ISSUED TO THE INSURED NAMED ABOVE FOR THE POLICY PERIOD INDICATED. NOTWITHSTANDING ANY REQUIREMENT, TERM OR CONDITION OF ANY CONTRACT OR OTHER DOCUMENT WITH RESPECT TO WHICH THIS CERTIFICATE MAY BE ISSUED OR MAY PERTAIN, THE INSURANCE AFFORDED BY THE POLICIES DESCRIBED HEREIN IS SUBJECT TO ALL THE TERMS, EXCLUSIONS AND CONDITIONS OF SUCH POLICIES. LIMITS SHOWN MAY HAVE BEEN REDUCED BY PAID CLAIMS.

Limits shown are as requested

INSR LTR	TYPE OF INSURANCE	ADDL INSD	SUBR WVD	POLICY NUMBER	POLICY EFF (MM/DD/YYYY)	POLICY EXP (MM/DD/YYYY)	LIMITS	
A	X **COMMERCIAL GENERAL LIABILITY** CLAIMS-MADE / X OCCUR GEN'L AGGREGATE LIMIT APPLIES PER: X POLICY / PRO-JECT / LOC OTHER:	Y		1000090660261	07/01/2026	07/01/2027	EACH OCCURRENCE DAMAGE TO RENTED PREMISES (Ea occurrence) MED EXP (Any one person) PERSONAL & ADV INJURY GENERAL AGGREGATE PRODUCTS - COMP/OP AGG	$2,000,000 $2,000,000 $1,000 $2,000,000 $6,000,000 $6,000,000
A	**AUTOMOBILE LIABILITY**	Y		1000635788261 AOS	07/01/2026	07/01/2027	COMBINED SINGLE LIMIT (Ea accident)	$2,000,000
A	X ANY AUTO OWNED AUTOS ONLY / SCHEDULED AUTOS X HIRED AUTOS ONLY / X NON-OWNED AUTOS ONLY			1000635789261 MA	07/01/2026	07/01/2027	BODILY INJURY (Per person) BODILY INJURY (Per accident) PROPERTY DAMAGE (Per accident)	
	UMBRELLA LIAB / OCCUR **EXCESS LIAB** / CLAIMS-MADE DED / RETENTION						EACH OCCURRENCE AGGREGATE	
B	**WORKERS COMPENSATION AND EMPLOYERS' LIABILITY** ANY PROPRIETOR / PARTNER / EXECUTIVE OFFICER/MEMBER EXCLUDED? Y/N: N **(Mandatory in NH)** If yes, describe under DESCRIPTION OF OPERATIONS below	N / A		1000004702 FL, MA 1000004704 WI	07/01/2026 07/01/2026	07/01/2027 07/01/2027	X PER STATUTE / OTH-ER E.L. EACH ACCIDENT E.L. DISEASE-EA EMPLOYEE E.L. DISEASE-POLICY LIMIT	 $1,000,000 $1,000,000 $1,000,000

DESCRIPTION OF OPERATIONS / LOCATIONS / VEHICLES (ACORD 101, Additional Remarks Schedule, may be attached if more space is required)

City of Riviera Beach is included as Additional Insured in accordance with the policy provisions of the General Liability and Automobile Liability policies.

CERTIFICATE HOLDER

City of Riviera Beach
600 W Blue Heron Blvd
Riviera Beach FL 33404 USA

CANCELLATION

SHOULD ANY OF THE ABOVE DESCRIBED POLICIES BE CANCELLED BEFORE THE EXPIRATION DATE THEREOF, NOTICE WILL BE DELIVERED IN ACCORDANCE WITH THE POLICY PROVISIONS.

AUTHORIZED REPRESENTATIVE

Aon Risk Services Central, Inc.

Holder Identifier :

Certificate No : 570123815928

©1988-2015 ACORD CORPORATION. All rights reserved.

AGENCY CUSTOMER ID: 570000093705

LOC #:

ADDITIONAL REMARKS SCHEDULE

AGENCY	NAMED INSURED
Aon Risk Services Central, Inc.	American Air Liquide Inc.
POLICY NUMBER	
See Certificate Number: 570123815928	
CARRIER / NAIC CODE	EFFECTIVE DATE:
See Certificate Number: 570123815928	

ADDITIONAL REMARKS

THIS ADDITIONAL REMARKS FORM IS A SCHEDULE TO ACORD FORM,

FORM NUMBER: ACORD 25 **FORM TITLE:** Certificate of Liability Insurance

WC Continued / Named Insured List

Workers Compensation:

Policy No: 1000004701 (AOS)
Policy Period: 7/01/2026 - 7/01/2027
Insurer: Starr Specialty Insurance Company
Limits: Same as the Workers Compensation and Employers Liability limits shown on the first page of the Certificate

Policy No: 1000004703 (AK, AZ, CT, IA, NC, NJ, NY, VT)
Policy Period: 7/01/2026 - 7/01/2027
Insurer: Starr Specialty Insurance Company
Limits: Same as the Workers Compensation and Employers Liability limits shown on the first page of the Certificate

Policy No: 1000004712 (USL&H)
Policy Period: 7/01/2026 - 7/01/2027
Insurer: Starr Indemnity & Liability Company
Limits: Same as the Workers Compensation and Employers Liability limits shown on the first page of the Certificate

---

NAMED INSUREDS ON THE ABOVE-REFERENCED POLICIES INCLUDE BUT ARE NOT LIMITED TO THE FOLLOWING COMPANIES:

American Air Liquide Inc.
Air Liquide Helium America, Inc.
Air Liquide Advanced Technologies U.S. LLC
Air Liquide America L.P.
Air Liquide USA LLC
Air Liquide Large Industries U.S. LP
Air Liquide Electronics U.S. LP
Air Liquide Global E&C Solutions US Inc.
Air Liquide Technical Services LLC
Air Liquide Global E&C Solutions Mexico LLC
Air Liquide Advanced Materials Inc.
Air Liquide Advanced Materials LLC
Airgas, Inc.
Airgas Carbonic, Inc.
Airgas Doral, Inc.
Airgas Merchant Gases, LLC
Airgas Priority Nitrogen, LLC
Airgas Safety, Inc.
Airgas Specialty Products, Inc.
Airgas USA, LLC
Airgas Nitrogen Services, LLC
Nitrous Oxide Corporation
Red-D-Arc Inc.
Airgas National Carbonation

© 2008 ACORD CORPORATION. All rights reserved.

The ACORD name and logo are registered marks of ACORD

Riviera Beach - Utility Special District

To: Honorable Mayor, Chairperson and Board Members

From: Joshua Niemann, Utility Special District Executive Director

Through: William Wilkins, City Manager

Subject: **Resolution Number 77-26UD: A Resolution of the Board of Directors of the City of Riviera Beach Utility Special District, Palm Beach County, Florida, authorizing the use of Piggyback contract from Palm Beach County Contract No. SS200426C for the purchase of Endress+Hauser Products, OEM Parts, Repair Services, Field Services, and Chemical Feed System Preventative Maintenance Services from TriNova, Inc. in an amount not to exceed $33,098.47 from Account Number 41131103-546000; and authorizing the Utility Special District Finance Director to make payments from Account Number 41131103-546000 in an amount not to exceed $33,098.47; and providing an effective date.**

Date: November 23, 2026

CC: General Public

Background:

This purchase is critical to support the reliable operation of the Utility Special District's water treatment, wastewater collection, and distribution facilities and to ensure continued compliance with all Federal, State, and Local regulatory requirements. Through the use of Palm Beach County Contract No. SS200426C, the District secures access to specialized Endress+Hauser products, OEM parts, repair services, field services, and chemical feed system preventative maintenance services from TriNova, Inc., the authorized sole-source provider under the County's contract.

The District relies extensively on Endress+Hauser instrumentation, analyzers, chemical feed systems, and associated process control equipment throughout its utility operations. Proper maintenance, calibration, repair, and replacement of these critical assets are essential to

maintaining treatment process reliability, monitoring water quality, and ensuring continuous regulatory compliance.

This procurement includes preventative maintenance services, field support, chemical feed system inspections, calibration of ammonia detection equipment, replacement of critical wear components, spare parts, pressure gauges, pulsation dampeners, calibration gases, and other specialized equipment necessary to maintain safe and efficient operation of the District's chemical feed systems. Routine maintenance activities will help identify potential equipment issues before failures occur, reduce unplanned downtime, improve operational reliability, and extend the service life of critical utility infrastructure for Fiscal Year 2027.

This investment will help ensure uninterrupted utility operations, maintain the accuracy and reliability of treatment process controls, and support the District's commitment to providing safe, reliable, and high-quality utility services to its customers.

City Goals:

The Citywide Goal is to Accelerate Operational Excellence.

Fiscal/Budget Impact:

$33,098.47

Recommendation:

Staff recommends a Motion to approve Resolution Number 77-26UD.

Attachments:

1. Resolution_Number_77-26UD.docx
2. Riviera Beach - Chemical Feed Contract - Q1421442 - 11.06.26.cleaned.pdf
3. SS200426C - AWARD LETTER.pdf
4. SS650563B - AWARD LETTER.pdf

Resolution Number 77-26UD

A Resolution of the Board of Directors of the City of Riviera Beach Utility Special District, Palm Beach County, Florida, authorizing the use of Piggyback contract from Palm Beach County Contract No. SS200426C for the purchase of Endress+Hauser Products, OEM Parts, Repair Services, Field Services, and Chemical Feed System Preventative Maintenance Services from TriNova, Inc. in an amount not to exceed $33,098.47 from Account Number 41131103-546000; and authorizing the Utility Special District Finance Director to make payments from Account Number 41131103-546000 in an amount not to exceed $33,098.47; and providing an effective date.

Whereas, Palm Beach County has renewed and awarded Contract No. SS200426C to TriNova, Inc. for Endress+Hauser Products and OEM Parts, Repair and Field Services as a sole-source procurement, with a contract term of January 23, 2027 through January 22, 2028; and

Whereas, the Utility Special District utilizes Endress+Hauser instrumentation, chemical feed systems, analyzers, and associated equipment throughout the water treatment, wastewater collection, and distribution systems; and

Whereas, **t**he District is in need of continued maintenance and support of these systems is necessary to ensure reliable operation of the Utility Special District's water and wastewater facilities and to maintain compliance with all applicable Federal, State, and Local regulatory requirements; and

Whereas, the District requires funding in the amount of $33,098.47 for preventative maintenance services, chemical feed system support, field services, spare parts, calibration equipment, and related repairs for fiscal year 2027; and

Whereas, the Board authorizes the Utility Special District Finance Director to make payments in an amount not to exceed $33,097.47 to Trinova Inc. from account number 41131103-546000; and

Whereas, this Resolution shall take effect upon approval of the Utility Special District Board.

Now, Therefore, be it resolved by the City of Riviera Beach Utility Special District, Palm Beach County, Florida, as follows:

Section 1. That the Utility Special District Board authorizes the Utility Special District Finance Director to make payments to Trinova Inc. from operating account 41131103-546000 in an amount not to exceed $33,098.47.

Section 2. The Executive Director of the Utility Special District, or designee, is authorized to execute all documents necessary to carry out the intent of this Resolution.

Section 3. This Resolution shall take effect immediately upon its passage and approval by the City of Riviera Beach Utility Special District Board of Directors.

Passed and Adopted this _____ day of _____, 2026.

APPROVED:

_____
Glen Spiritis, Ph.D
Chairperson

_____
Fercella Davis-Panier
Vice-Chairperson

ATTEST:

_____
Debrah Hall
Master Municipal Clerk
District Clerk

MOTIONED BY: _____

SECONDED BY: _____

B. GUYTON: ____

K. MILLER-ANDERSON: ____

S. LANIER: ____

G. SPIRITIS: ____

F. DAVIS-PANIER:

Reviewed as to Legal Sufficiency

_____
Dawn S. Wynn, District Attorney

Date: _____

QUOTATION

Quote Number	
1421442	
Quote Date	Page
10/15/2026 15:41:56	1 of 3

Quote Expires On: 11/14/2026

Please address your order to:
TriNova Inc.
c/o Accounts Payable
4485 Laughlin Dr. S
Mobile, AL 36693
251-378-7837

Bill To:

CITY OF RIVIERA BEACH
5904 N FLAGLER DRIVE
RIVIERA BEACH, FL 33404

Ship To:

CITY OF RIVIERA BEACH
600 W BLUE HERON BLVD
RIVIERA BEACH, FL 33404

Requested By: Garry Baker
Contact Email: gebaker@rivierabeach.org

Customer ID: 37772

Terms	*Shipping*	*Customer Service Rep*
Net 30	PP&A	ZACHARY.KAISER

Quantities			*Item ID* *Item Description*	*Unit Price*	*Extended Price*
Line	*QTY*	*UOM* *Unit Size*			

Order Note: SOW:

All tasks to be performed at water plant and remote pump station chemical feed systems

Pump spare parts kits to be paid for by City via BlueBook Account

Quarterly visits:

bump test ammonia detector

tech to adjust pressure settings of PRV, BPV & PD's as needed

Tech make certain system is free of leaks by tightening threaded fittings and headbolts

Tech to make repairs where possible of accessories, CPVC pipe/valve/fittings with customer spares or quote SOW for required parts & return visit

tech to perform drawdown to verify pump accuracy

tech to provide any O&M training requested by site personnel

Annual PM visit, tech to replace consumable elastomers such as diaphragms, bladders, and pump spare parts kits in accordance with mfr recommendations for annual PM

Tech to perform all other quarterly PM tasks in addition to soft goods replacements

Tech to calibrate ammonia detector using site gas calibration kit

Tech to use spare parts from client inventory, and direct reordering to replenish consumed spare parts after quarterly and annual PMs

tech to leave workspace clean, and remove chemical from repaired leaks & from maintenance duties

QUOTATION

Quote Number	
1421442	
Quote Date	Page
10/15/2026 15:41:56	2 of 3

Quote Expires On: 11/14/2026

Please address your order to:
TriNova Inc.
c/o Accounts Payable
4485 Laughlin Dr. S
Mobile, AL 36693
251-378-7837

Quantities			*Item ID* / *Item Description*	*Unit Price*	*Extended Price*
Line	*QTY*	*UOM* / *Unit Size*			
1	22.00	EA 1.0	1035446 ProMinent Spare parts kit 1/2" BPV / PRV	128.5667	2,828.47
2	8.00	EA 1.0	7740946 ProMinent Pulsation Dampener 3/4" FNPT, PVC/Hypalon, 36 cu in, Single Port	1,241.8000	9,934.40
3	4.00	EA 1.0	7740959 Hypalon Bladder for Pulsation Dampener	169.3000	677.20
4	12.00	EA 1.0	1062252 ProMinent 0-160PSI 316SS BTGAUGE CPVC/PT 0-160PSI 316SS BTGAUGE CPVC/PTFE SEAL SM	320.2000	3,842.40
5	1.00	EA 1.0	823-0201-21 Ammonia (NH3) EC-LI	582.0000	582.00
6	1.00	EA 1.0	7010032-1 PVC CARRYING CASE HOLDS TWO GAS BOTTLE PLUS REGULATOR, TUBING AND FITTING.	156.0000	156.00
7	1.00	EA 1.0	821-0223-01 PLUS SERIES CALIBRATION PLUG	82.0000	82.00
8	1.00	EA 1.0	7011668-2 CAL CUP W/ TUBING XP-R 02	113.0000	113.00
9	1.00	EA 1.0	7016929 1 LPM CORROSION RESISTANT REGULATOR FOR NH3, CL2, HCL, SO2, NO2.	457.0000	457.00
10	1.00	EA 1.0	009824-25 ZERO GAS FOR ALL OTHERS INCLUDES INFRARED, 20.9% OXYGEN IN NITROGEN	232.0000	232.00
11	1.00	EA 1.0	009824-38 SENSIDYNE AMMONIA 50 PPM CALIBRATION GAS Ammonia, NH3, 50 ppm in Nitrogen (58 SL)	534.0000	534.00
12	1.00	EA 1.0	SVC-TS-CHEMFEED CHEMICAL FEED SERVICE	3,675.0000	3,675.00
13	1.00	EA 1.0	SVC-TS-CHEMFEED CHEMICAL FEED SERVICE	9,625.0000	9,625.00
14	1.00	EA	CHEMFEED PROJECT MANAGEMENT	360.0000	360.00

QUOTATION

Quote Number	
1421442	
Quote Date	Page
10/15/2026 15:41:56	3 of 3

Quote Expires On: 11/14/2026

Please address your order to:
TriNova Inc.
c/o Accounts Payable
4485 Laughlin Dr. S
Mobile, AL 36693
251-378-7837

Quantities			Item ID Item Description	Unit Price	Extended Price
Line	QTY	UOM Unit Size			
	1.0	...			

Total Lines: 14

SUB-TOTAL:	33,098.47
TAX:	0.00
AMOUNT DUE: $	**33,098.47**

TRINOVA, INC.

STANDARD TERMS AND CONDITIONS OF SALE OF GOODS

All sales order related transactions with TriNova, Inc shall be governed by TriNova, Inc's Standard Sales Terms and Conditions (TriNova Terms) which are subject to modification. Please visit https://trinovainc.com/terms-and-conditions/ for the most up to date TriNova Terms. Any contracts or agreements which are currently in place shall apply.

Procurement Department
50 South Military Trail, Suite 110
West Palm Beach, FL 33415-3199
(561) 616-6800
FAX: (561) 242-6744
www.pbc.gov/procurement

Palm Beach County Board of County Commissioners

Sara Baxter, Mayor

Marci Woodward, Vice Mayor

Maria G. Marino

Gregg K. Weiss

Joel G. Flores

Maria Sachs

Bobby Powell Jr.

County Administrator

Joseph Abruzzo

Form L

September 15, 2026

TriNova, Inc
2401 Drane Field Rd
Lakeland, FL 33811

TERM CONTRACT # SS200426C

Dear Vendor:

This is to inform you that Palm Beach County Board of County Commissioners ("County") is entering into a Term Contract with your company for ENDRESS + HAUSER PRODUCTS AND OEM PARTS, REPAIR AND FIELD SERVICES based on:

[X] RENEWAL OF CONTRACT based on SOLE SOURCE SOLICITATION #SS200426/CB in accordance with all original terms, conditions, specifications with no deviation. Vendor shall notify Procurement immediately if the sole source status changes.

[X] OTHER: New pricing effective 01/23/2027 per Amendment# 1

The term of this contract is 01/23/2027 through 01/22/2028, and has an estimated dollar value of $399,000

If applicable, Vendor shall maintain all insurance coverage(s) throughout the entire term of the contract, including any renewals or extensions thereof.

County User Departments will issue individual "Delivery Orders" against this contract as your authorization to deliver. The original invoice must be sent to the address on the Delivery Order ("DO") and must reference the DO number (e.g., DO 680 XY030305000000001111). A copy of the invoice may be sent to the County User Department. Invoices submitted on carbon paper shall not be accepted. In order for the County to make payment, the Vendor's Legal Name; Vendor's Address; and Vendor's TIN/FEIN Number on the Vendor's bid/quote/response must be exactly the same as it appears on the invoice and in the County's VSS system that can be accessed at https://pbcvssp.co.palm-beach.fl.us/webapp/vssp/AltSelfService. Failure to comply with the foregoing may result in a delay in processing payment.

If you have any questions, please contact the Procurement Department at **Pur-PurchTeam3@pbc.gov**.

Sincerely,

for Jessica Comis
Procurement Director

c: Pamela Giust, Water Utilities

"An Equal Opportunity Employer"

Official Electronic Letterhead

Procurement Department
50 South Military Trail, Suite 110
West Palm Beach, FL 33415-3199
(561) 616-6800
FAX: (561) 242-6744
www.pbc.gov/procurement

Palm Beach County Board of County Commissioners

Sara Baxter, Mayor
Marci Woodward, Vice Mayor
Maria G. Marino
Gregg K. Weiss
Joel G. Flores
Maria Sachs
Bobby Powell Jr.

County Administrator

Joseph Abruzzo

Form L

September 15, 2026

TriNova, Inc
2401 Drane Field Rd
Lakeland, FL 33811

TERM CONTRACT # SS650563B

Dear Vendor:

This is to inform you that Palm Beach County Board of County Commissioners ("County") is entering into a Term Contract with your company for PROMINENT FLUID CONTROLS, PRODUCTS, OEM REPAIR PARTS, AND REPAIR SERVICES based on:

[X] RENEWAL OF CONTRACT based on SOLE SOURCE SOLICITATION #S650563/JS in accordance with all original terms, conditions, specifications with no deviation. Vendor shall notify Procurement immediately if the sole source status changes.

[X] OTHER: New pricing effective 12/18/2026 per Amendment# 1

The term of this contract is 12/18/2026 through 12/17/2027, and has an estimated dollar value of $400,000

If applicable, Vendor shall maintain all insurance coverage(s) throughout the entire term of the contract, including any renewals or extensions thereof.

County User Departments will issue individual "Delivery Orders" against this contract as your authorization to deliver. The original invoice must be sent to the address on the Delivery Order ("DO") and must reference the DO number (e.g., DO 680 XY030305000000001111). A copy of the invoice may be sent to the County User Department. Invoices submitted on carbon paper shall not be accepted. In order for the County to make payment, the Vendor's Legal Name; Vendor's Address; and Vendor's TIN/FEIN Number on the Vendor's bid/quote/response must be exactly the same as it appears on the invoice and in the County's VSS system that can be accessed at https://pbcvssp.co.palm-beach.fl.us/webapp/vssp/AltSelfService. Failure to comply with the foregoing may result in a delay in processing payment.

If you have any questions, please contact the Procurement Department at **Pur-PurchTeam3@pbc.gov**.

Sincerely,

Jessica Comis
Procurement Director

c: Pamela Giust, Water Utilities

"An Equal Opportunity Employer"

Official Electronic Letterhead

Riviera Beach - Utility Special District

To:	Honorable Mayor, Chairperson and Utility Special District Board of Directors
From:	Joshua Niemann, Utility Special District Executive Director
Through:	William Wilkins, City Manager
Subject:	**Presentations of Updates on Utility Special District Projects**
Date:	November 23, 2026
CC:	General Public

Background:

At its August 22, 2024, meeting, the Utility Special District Board requested monthly Status Reports concerning the state of critical projects being conducted at the Utility Special District. More specifically, at this time, such updates to be presented to the Board are comprised of the following:

1. Brown and Caldwell: Owner's Representative Services for the New Water Treatment Plant Project
2. Haskell/CDM Smith: New Water Treatment Plant Project
3. Globaltech: Wellfield Rehabilitation Project

City Goals:

The Citywide Goal is to Accelerate Operational Excellence.

Fiscal/Budget Impact:

N/A

Recommendation:

Staff recommends that the Mayor and USD Board members receive these Presentations.

Attachments:

1. Brown and Caldwell Owners Rep Update 11-2-26.pdf
2. Haskell-CDM Smith_JV Update_November 2026.pdf

3. Globaltech_Wellfield Rehab Proj_Update_11032026.pdf

Brown AND Caldwell

1400 Centrepark Boulevard, Suite 960,
West Palm Beach, FL, 33401
561.684.3456

Memo

Prepared for: Riviera Beach Utility Special District (RBUSD or City)

Subject: RBUSD New WTP Development Project - Owner's Representative Board Update for Phase 1 Project Activities

Date: November 2, 2026

From: Nigel Grace, PE, Brown and Caldwell

This Board Update provides a summary of key activities that have transpired since the previous reporting period through October 30, 2026. The updates for the current reporting period are shown in **bold** font for emphasis. Specifically, the following is addressed herein:

1. Project Schedule Status
2. Wellfield Construction Status (GMPs 2 and 3)
3. Injection Well and Dual-zone Monitoring Well Construction Status (GMP 4
4. Avenue L Water Treatment Plant (WTP) Construction Status (GMP 5)
5. Raw Water Transmission Main Construction Status (GMP 6)
6. Finished Water Transmission Main (GMP 7)
7. Recent Deliverables
8. Change Orders
9. Exhibit - Supplemental Information

Project Schedule Status Update

Six of seven anticipated GMPs for delivery of the water treatment modernization program have been approved and are in various stages ranging from active construction to pre-construction activities. GMP 6, for the raw water transmission system was the most recent to be approved by the Board.

The JV submitted a draft of GMP 7 on July 31, 2026 for review by USD and the OR team. This GMP will provide the finished water transmission pipeline to connect the new WTP to the distribution system. Initial comments were provided to the JV on August 12th. The JV submitted a revised GMP 7 on October 2, 2026 and supplemental comments were provided on October 9th. Upon receipt of a revised proposal that satisfactorily addresses outstanding comments, GMP 7 will be brought forward for Board consideration.

The overall program schedule is governed by the completion timeline for GMP 5 (construction of the new WTP) which has the following completion milestones:

1. Substantial Completion – November 2029
2. Final Completion – April 4, 2030

The status of work that is progressing for GMP's 2 through 6 is summarized below.

Wellfield Construction Status (GMPs 2 and 3)

The JV received purchase orders authorizing work to proceed with under GMP 2 and GMP 3 on December 6, 2024 and March 6, 2025, respectively. Wellfield construction activities under GMPs 2 and 3 continue to progress in accordance with schedule, with multiple wells advancing through drilling, development, and surface completion phases. No material schedule impacts have been identified during this reporting period. Refer to Supplemental Information section for additional details. No change order requests were submitted for this GMP in the month of **October** 2026.

Injection Well and Dual Zone Monitoring Well Construction Status (GMP 4)

The JV received authorization to proceed with work under GMP 4 on August 25, 2025. Injection well and dual zone monitoring well construction activities under GMP 4 continue to progress. On July 13, 2026, the JV submitted an Initial Notice of Potential Delay and Change due to additional drilling beyond the 3500 ft depth assumed as the basis for the GMP schedule which was required to find a suitably permeable zone to terminate the well**.** Costs associated with the additional drilling have been funded through contingency already included within GMP 4. No change order request was submitted during **October 2026.**

Avenue L WTP Construction Status (GMP 5)

The Board approved GMP 5 on February 5, 2026. **Notice to Proceed was issued on March 11, 2026 with final completion scheduled to occur on April 4, 2030.** The baseline project scheduled has been submitted by the JV.

The following is the status of construction activities associated with GMP 5:

- Submittals, RFIs, procurement activities and site preparation (e.g. installation of lighting) activities are ongoing.
- **Construction of the new WTP continues to gain momentum. Underground piping and other site infrastructure work are progressing, while construction is beginning to transition into vertical elements through ground improvement, foundation preparation and related activities**.
- **The previously reported generator procurement issue has been resolved. The purchase order for the Tier 4 compliant generator system has been issued and equipment submittals are underway**.
- **The JV is refining the post-treatment process configuration to separately convey nanofiltration and reverse osmosis permeate streams. The revised configuration is intended to provide greater flexibility and improve the effectiveness of post-treatment and finished water stabilization**.
- Four major building permits have now been issued including the administration/membrane, guardhouse, electrical and high service pump station facilities.
- **The JV's updated progress schedule continues to reflect a short-term variance, including 12 days of negative float. The JV continues to work through schedule recovery measures.**
- No change order request was submitted during **October 2026**.

Raw Water Transmission Construction Status (GMP 6)

GMP 6 was approved by the Board on May 20, 2026 with NTP being issued on August 10, 2026. The following is the status of construction activities associated with GMP 6:

- JV is continuing to work through FEC/other permitting, submittals, procurements and construction mobilization activities.
- On June 1, 2026, the JV informed the OR that FEC denied permit approval for open-cut crossing of two unused/inoperable railway lines and is requiring the use of more costly trenchless crossing approach that is inconsistent with GMP 6 pricing basis. The JV has advanced design modifications along 15th Street intended to avoid or reduce conflicts with the existing FEC railway infrastructure. The revised approach remains under development. .
- No change order request was submitted during **October 2026.**

Finished Water Transmission Main (GMP 7)

GMP 7 includes construction of the finished water transmission main to deliver water to the system, roadway and drainage improvements along Avenue L between Blue Heron Blvd and 17th Street and an asset management system for the new WTP. The JV submitted a draft GMP 7 on July 31, 2026 and a revised proposal on October 2, 2026. The revised proposal improved upon the initial submittal; however, additional clarification, cost support, and revisions remain necessary and was transmitted to the JV in follow-up comments that were provided to the JV on October 9, 2026. The JV submitted a comment response log on October 28, 2026 that provided clarifications, governing considerations and its intended response to each comment. A meeting has been scheduled to discuss outstanding items during the first week of November. Upon receipt of a proposal that satisfactorily addresses the outstanding comments, GMP 7 will be brought forward for Board consideration.

Recent Deliverables

1. **Existing WTP Corrosion Control Treatment Design Memo – the JV submitted the noted memo on October 23, 2026. The memo is currently under review by USD and the OR team**.
2. Finished Water Transmission Main
    a. FEC railway permitting status clarification**:** FEC has approved and issued the permit for the finished water main railway crossing.

Change Orders

No contract amendments or change orders are currently proposed for any active GMP.

SUPPLEMENTAL INFORMATION

Additional details relating to the status of GMPs 2 to 4 are provided below.

GMP 2 – Two FAS Wells and Two Fully Equipped SAS Wells

Activities completed for the Surficial Aquifer System (SAS) well at site 2015A includes paver installation on October 1st, FP&L set the electric meter on October 14th and completed final section of the concrete pour at the driveway on October 23rd. Other construction activities completed in October include removal of the existing chain link fence on October 23rd and completed milling and resurfacing asphalt apron on October 28th. Completion of the permanent fencing installation and completion of cable pulling with terminations at the instrumentation panel and instruments for the process piping is expected to be completed on October 30th. Construction activities scheduled for the month of November include the site work and landscaping expected to be completed November 2nd, Bac-T testing, startup and commissioning, and staff training.

Activities completed for Surficial Aquifer System (SAS) Well at 2015B includes replacing of stainless steel 316 hardware, ARVs, and globe body silent check valve on October 22nd. Other construction activities completed include completed installation of hose bibb and the 2-inch potable waterline to existing water meter on October 22nd. Currently no construction activities are scheduled for the month of November.

No construction activities were completed for the Floridan Aquifer System (FAS) Well #1. Currently no construction activities are scheduled for the month of November.

Activities completed for the Floridan Aquifer System (FAS) Well #5 include replacing stainless steel 316 hardware and installation of hose bibb and the 2-inch potable waterline to existing water meter on October 22nd. Currently no construction activities are scheduled for the month of November.

Construction activities completed at Avenue U include removal of the electrical equipment rack and panels on October 15th and completed limerock base parking lot for the wells on October 6th. Construction activities scheduled for the month of November includes standalone generator delivery expected on November 1st, demo of the existing concrete equipment rack pad, removal of under slab electrical duct banks expected to be initiated on November 13th, and installation of the new electrical equipment rack pad.

GMP 3 – Remaining FAS Wells

Activities completed for Floridan Aquifer System (FAS) Well #2 include installation of the 10-inch HDPE underground process piping on October 7th and began excavation for FP&L feeders from pole transformer to the location of the well pad on October 22nd. Construction activities scheduled for the month of November depend on the approval of the dewatering plan and permit.

.Activities completed for Floridan Aquifer System (FAS) Well #3 include attempting to run the APT but had interference with the drilling at FAS-6 on October 1st. Construction activities scheduled for the month of November include perform the APT expected to be initiated on November 16th, followed by the final video survey and installation of the permeant wellhead.

Activities completed for Floridan Aquifer System (FAS) well #4 includes completed subgrade for well and generator pad on October 9th, completed installing the 10-inch HDPE underground process piping on October 2nd, and installation of the FP&L feeders for pole transformer to the well pad on October 20th. Construction activities scheduled for the month of November include installation of the under slap electrical, concrete curbing, well and generator pads.

Drilling activities completed for Floridan Aquifer System (FAS) Well #6 includes pilot hole drilling to a depth of 1,700 feet below ground surface on October 6th, geophysical logging on October 8th, completed pilot hole reaming to a depth of 1,275 feet below ground surface on October 15th, and completed installing the final 17.4-inch PVC casing to a depth of 1,720 feet below ground surface on October 20th. Construction activities scheduled for the month of November include continuation of cementing the final 17.4-inch PVC casing initiated on October 20th till November 4th and background monitoring for APT expected to be initiated on November 5th. Followed by the step drawdown test and final water quality sample collection.

GMP 4 - Injection Well and Dual Zone Monitoring Well Construction Status

Construction activities completed for the Deep Injection Well (DIW) include Pilot hole reaming to a depth of 3,038 feet below pad level on October 18th, completed geophysical logging on October 19th, completed installing the 24-inch steel casing on October 23rd and completed the pressure grout and C.B.L on October 23rd. Drilling activities scheduled for the month of November include completion of cementing of the 24-inch steel casing expected to be completed on November 2nd , perform C.B.L and internal mechanical integrity test (MIT) expected to be initiated on November 3rd. Followed by pilot hole reaming to a depth of 3,400 feet below pad level, installation and cementing of the 16-in FRP tubing, well development and installation of the wellhead.

Construction activities completed for the Dual Zone Monitoring Well (DZMW) include completing the cementing of the 16-inch steel casing on October 1st, completed casing pressure testing on October 7th, and completed pilot hole drilling to a depth of 2,150 feet below pad level on October 19th. Other drilling activities completed in October include geophysical logging of the pilot hole on October 22nd and completed (2) packer tests, first packer test completed on October 26th, and the second packer test completed on October 29th. Drilling activities scheduled for the month of November include installation and cementing of the 6 5/8-inch FRP tubing expected to be initiated on November 2nd, C.B.L and M.I.T expected to be initiated on November 3rd. Followed by well development and water analysis, demobilization of the drill rig, and installation of the permanent wellhead.

701 San Marco Boulevard Ste 1400
Jacksonville, Florida 32207
tel: 904 791-4500

To: Honorable Mayor, Chairperson and Board of Directors

Through: William Wilkins, Interim City Manager

From: Michael Hoisington, DBIA, Haskell/CDM Smith Joint Venture

Subject: New Water Treatment Plant Project Update

Date: November 3, 2026

Monthly Update Status

The Haskell/CDM Smith Joint Venture request to provide to the Board of Directors of the City of Riviera Beach Utility Special District, Palm Beach County, Florida a monthly update on the status of the design deliverables and the construction status to date for the Riviera Beach Water Treatment Facility.

Design Status

Phase 1 design services are complete, and staff have moved to supporting construction activities.

Grant and Loan Funding

FDEP SRF – Board approved the resolution at the June meeting to execute and delivery the application to the state. The loan application, the approved resolution, and the full set of permit plans and specifications were submitted to FDEP in July. We are waiting for the loan agreement from FDEP for signature.

WIFIA – The JV is working on the application/ letter of interest for WIFIA. A full draft is being reviewed with City staff and a resolution will be presented at the November Board meeting.

Local Breakdown

The JV remains committed to maximizing opportunities for local businesses, workforce participation, and community engagement throughout the Riviera Beach Water Treatment Plant project.

- Internship Program - Building on its existing program, the JV will continue its internship program for local college students during construction of the project, providing valuable hands-on industry experience and career development opportunities.
- Food Trucks - The JV is coordinating with local food truck operators to establish a rotating on-site schedule that will support small businesses while serving project personnel.

701 San Marco Boulevard Ste 1400
Jacksonville, Florida 32207
tel: 904 791-4500

- Subcontracting and Partnering Opportunities - In collaboration with current subcontract partners mobilizing over the coming months, the JV is actively identifying and segmenting specific scopes of work that can be performed by qualified local subcontractors and suppliers. This includes training local businesses on utility infrastructure projects.
- Labor Contracting - The JV has engaged with Manpower to explore local labor sourcing solutions and expand employment opportunities within the community. As the project progresses, the JV will continue to proactively promote and increase the utilization of local businesses, suppliers, and workforce resources whenever practical and aligned with project requirements.
- Subcontractor Coaching/ Business Training - The JV has been mentoring several subcontractors in various areas including business acumen, schedule software usage, and project management. As the project progresses, the JV will continue to develop these relationships and training tools.

Below is a breakdown of the local Palm Beach County participation based on the last invoice through September. The JV is developing a local participation plan that incorporates the concepts noted above.

				Owner Billed-to-Date			
Scope of Work	Vendor	Contract Value	Contract Paid-to-date	Local	*	Non-Local	Total
Surveys	26th Parallel North Inc			$ 75,683.25			$ 75,683.25
Landscaping	A Cut Above Landscape			$ -		$ -	$ -
Project Management	Ace Custom Signs & Window Tinting LLC			$ 6,944.44			$ 6,944.44
Bridge Cranes	Advanced Overhead Systems			$ -		$ -	$ -
GMP 6 - RWTM HDD	All Florida HDD LLC			$ -		$ -	$ -
Construction Aministration	Apex Companies LLC			$ 467,194.00			$ 467,194.00
Storefront	Architectural Aluminum Techniques			$ -		$ -	$ -
Sitework, Demolition, Site Clearing, Grading, SWPP, Et	Badger Infrastructure Solution Ltd			$ 2,596.32	*		$ 2,596.32
Fiberglass Lift Station	Barney's Pumps Inc			$ 31,825.00	*		$ 31,825.00
Earthwork, Asphalt and Concrete	Big D Paving Company, Inc.			$ -			$ -
Odor Control Bio Filters Supply & Forced Draft Stripping	BioAir Solutions LLC			$ -			$ -
RWTM Micro Tunnels	Bradshaw Construction Corporation			$ -			$ -
Electrical	Brown Electrical Solutions			$ 1,384,876.00	*		$ 1,384,876.00
Temp Fence	BullDog Fence of Florida			$ 15,993.00			$ 15,993.00
HDPE Tanks, Sump Pumps, Diaphragm Metering Pumps Corrosion Control	Carl Eric Johnson Inc			$ -			$ -
Commissioning	CC Control Corp			$ -			$ -
Various Scopes	**CDM Constructors Inc**						
Project Management/General Conditions	CDM Constructors Inc			$ -		$ 564,605.89	$ 564,605.89
General Conditions, Labor Only	CDM Constructors Inc			$ -		$ 2,559,871.52	$ 2,559,871.52
Odor Control Biofilters	CDM Constructors Inc			$ -			$ -
Start-up & Commissioning GC, Labor	CDM Constructors Inc			$ -		$ -	$ -
General Liability Insurance	CDM Constructors Inc			$ -		$ 348,006.65	$ 348,006.65
Payment & Performance Bond	CDM Constructors Inc			$ -		$ 1,104,014.42	$ 1,104,014.42
Electrical Supervision	CDM Constructors Inc			$ -		$ 237,500.00	$ 237,500.00
Electrical	CDM Constructors Inc					$ -	$ -
Various Scopes	**CDM Smith Inc.**			$ -			
WTF Commissioning	CDM Smith Inc.			$ -		$ -	$ -
Grant Funding	CDM Smith Inc.			$ -		$ 224,274.54	$ 224,274.54
Desgin & Construction Admin.	CDM Smith Inc.			$ -		$ 6,771,222.24	$ 6,771,222.24
Start-up Commissioning Bid Support	CDM Smith Inc.			$ -		$ -	$ -
Vacuum Air Release Valves / Misc Steel Pipe	Core and Main			$ 24,635.17	*		$ 24,635.17
Process Coatings	Cypress Construction & Coating			$ -		$ -	$ -
Project Management	DeOntre McCray			$ 12,924.52	*		$ 12,924.52
Pre Engineered Metal Building	Dysedc LLC			$ -		$ -	$ -
Piles	ET-Menard Inc			$ -		$ -	$ -
Cartridge Filters	Fil-Trek Corporation			$ -		$ -	$ -
Well Drilling	Florida Design Drilling LLC			$ 23,101,266.02			$ 23,101,266.02
Utilites	FPL			$ 46,330.11	*		$ 46,330.11
Fuel Station Decommission & Demo	Glasgow Equipment Service, Inc.			$ 137,500.00			$ 137,500.00
Desgin & Construction Admin.	Globaltech, Inc.			$ 258,454.19			$ 258,454.19
Sitework & Underground Utility Demo	Happy Home Renovation LLC			$ 272,314.00			$ 272,314.00
GC for Doors, Interiors and MEP	Haymaker Construction			$ -			$ -
Design Consultant	HBC Engineering Company			$ 632,040.03			$ 632,040.03
Site Cast	Heritage Concrete Construction LLC			$ -		$ -	$ -
Awnings and Canopies	Hoover Architectural			$ 21,648.99			$ 21,648.99
Submersible Solids Handling Pumps	Hydra Service Inc			$ -			$ -
Roofing	Latite Roofing and Sheet Metal			$ -			$ -
Builder's Risk Insurance	Lockton			$ -		$ 4,512,860.52	$ 4,512,860.52
Professional Liability Insurance	Lockton			$ -		$ 745,975.65	$ 745,975.65
Sitework, Demolition, Site Clearing, Grading, SWPP, Et	Lox Construction LLC			$ 774,967.70			$ 774,967.70

CONFIDENTIAL

				Owner Billed-to-Date			
Scope of Work	Vendor	Contract Value	Contract Paid-to-date	Local	*	Non-Local	Total
Masonry	Oceanside Masonry Inc			$ -		$ -	$ -
Overhead Doors	OGD Equipment Company, LLC			$ -		$ -	$ -
Locates Services GPRS	Penhall Company			$ 3,218.75			$ 3,218.75
Permits	Permits			$ 44,250.00	*		$ 44,250.00
Geotechnical Services	Radise International, LC			$ 339,946.62	*		$ 339,946.62
Instrumentation and Controls	Revere Control Systems LLC			$ -		$ 133,092.20	$ 133,092.20
Backup Generators	Ring Power Corporation			$ -		$ 38,626.40	$ 38,626.40
Automatic Straining Equipment	Schroeder Industries LLC			$ -		$ -	$ -
Security	Security Services			$ 10,353.77	*		$ 10,353.77
Erosion & Sediment Control	SLB General Contracting LLC			$ 12,079.00			$ 12,079.00
Security Signage	Spring Moon Signs and Designs Inc			$ -		$ -	$ -
Inline Static Mixers	Statiflo Corp			$ -		$ -	$ -
Temp Cleanup	Temp Cleanup			$ -		$ 23,424.16	$ 23,424.16
Temp Fence	Temp Fence			$ -		$ 33,394.46	$ 33,394.46
Temp Utilites	Temp Utilites			$ 28,673.36	*		$ 28,673.36
Desgin & Construction Admin.	The Haskell Compnay			$ -		$ 885,364.94	$ 885,364.94
WTF Commissioning	The Haskell Compnay			$ -		$ -	$ -
Various Scopes	**The Haskell Compnay**			$ -		$ -	$ -
General Conditions Expenses	The Haskell Compnay			$ -		$ 1,753,672.22	$ 1,753,672.22
Construction Field Office	The Haskell Compnay			$ -		$ 315,056.69	$ 315,056.69
General Conditions, Labor Only	The Haskell Compnay			$ -		$ 3,750,250.61	$ 3,750,250.61
Project Management	The Haskell Compnay			$ -		$ 210,123.68	$ 210,123.68
Avenue L - Water Plant & Membrane Building	The Haskell Compnay			$ -		$ 150,000.00	$ 150,000.00
Sitework, Demolition, Site Clearing, Grading, SWPP	The Haskell Compnay			$ -		$ -	$ -
Electrical	The Haskell Compnay			$ -		$ 33,589.09	$ 33,589.09
Instrumental & Control	The Haskell Compnay			$ -		$ 6,200.00	$ 6,200.00
Process & Yard Piping	The Haskell Compnay			$ -		$ 2,080,425.87	$ 2,080,425.87
Offsite Parking, Warehousing & Laydown	The Haskell Compnay			$ -		$ 222,661.61	$ 222,661.61
Start Up Flushing	The Haskell Compnay			$ -		$ 196,838.20	$ 196,838.20
Site Maintenance	The Haskell Compnay			$ -		$ 87,084.44	$ 87,084.44
Survey & Site Photo Services	The Haskell Compnay			$ -		$ -	$ -
Concrete Work	The Haskell Compnay			$ -		$ -	$ -
Steel & Metals	The Haskell Compnay			$ -		$ 256,579.67	$ 256,579.67
Yard Piping & Underslab Piping	The Haskell Compnay			$ -		$ 882,379.06	$ 882,379.06
Process Piping & Mechanical Equipt. Install	The Haskell Compnay			$ -		$ 612,326.72	$ 612,326.72
General Conditions Site Maint. Craft Labor	The Haskell Compnay			$ -		$ 160,606.60	$ 160,606.60
Start-up & Commissioniing Bid Support	The Haskell Compnay			$ -		$ -	$ -
Grant Funding	The Haskell Compnay			$ -		$ 6,369.00	$ 6,369.00
General Liability Insurance	The Haskell Compnay			$ -		$ 1,609,899.47	$ 1,609,899.47
Payment & Performance Bond	The Haskell Compnay			$ -		$ 1,267,673.99	$ 1,267,673.99
VDC	The Haskell Compnay			$ -		$ 21,635.46	$ 21,635.46
Project Management	The Mosaic Group			$ 29,663.19			$ 29,663.19
Horizontal Directional Drilling	Treasure Coast Infrastructure			$ -		$ 16,245.00	$ 16,245.00
Fencing	Tropic Fence, Inc.			$ 21,456.00			$ 21,456.00
Peristaltick Metering Pumps	TSC - Jacobs North, Inc			$ -		$ -	$ -
SWPPP, Vibration Monitoring & Material Testing	UES Professional Solutions LLC			$ 27,123.60		$ -	$ 27,123.60
SUE	WGI Inc			$ -			$ -
Wholesale Electric Supplies	Wholesale Electric Supply Company Inc			$ -		$ -	$ -
	Total	**$ 270,370,828.81**	**$ 35,716,525.63**	**$ 27,708,273.78**		**$ 31,821,850.97**	**$ 59,605,808.00**

CONFIDENTIAL

701 San Marco Boulevard Ste 1400
Jacksonville, Florida 32207
tel: 904 791-4500

Well GMPs (2 &3)

- FAS-1
  - FDOT permit received, coordinating with Lox.
  - Instruments Pending
  - Control Panels remain outstanding due to FAT.
- FAS-2
  - FDOT requested confirmation from local agencies regarding MOT approval. Lox waiting for the manhole so they can coordinate work.
  - FDD getting ready for the APT Test
  - BES to start conduit runs
- FAS-3
  - Plumbness and alignment testing
  - APT is Nov 16, 2026. Nov 5th starts the background testing.
- FAS-4
  - Conduit from the transformer pole to the wells. Backfill in process.
  - Lox construction working on the well pad and curb.
  - Structural fill under the well pad completed
  - JV working on conduit layout for BES.
  - Concrete placement on FPL conduits
- FAS-5
  - Cleaning electrical manholes
  - Lox Construction installed lime rock pad
  - JV working on RFI on new layout for ATS pad
  - JV and BES met with crane company to discuss rigging of generator
  - 2" Water line has been installed, inspected and pass. RFI was submitted to document as-built condition.
- FAS-6
  - Casing cemented
  - Dredged out debris from the well.
- SAS-2015A
  - Wood Fence to be demoed.
  - Lox has planted coco plums and installed landscaping
  - Teco gas test station relocated.
  - Chain link fence installed
  - FPL Meter installed
  - Meeting took place last Friday with BES and Revere, BES will repair all the deficiencies. Pending confirmation from Revere on when they can be back.
- SAS-2015B
  - Need communication from FDD regarding pump rotation
  - Need price from BES for additional work
  - Hydrostatic Testing pending.

Deep Injection Well (GMP4)

  - Deep Injection Well - Casing is being cemented to surface. Pressure test to be performed once concrete cures.

701 San Marco Boulevard Ste 1400
Jacksonville, Florida 32207
tel: 904 791-4500

- Dual-Zone Monitoring Well (DZMW)- Completed packer test, waiting water quality data (Thursday and Friday) and CDM to submit casing seat request to FDEP.
-

Water Plant (GMP5)

- JV received Membrane Building permit in late October. Vendors are being scheduled.
- Menard continues to install ground improvements onsite. Some additional rock was uncounted but has been removed by Haskell.
- Yard piping continues to progress. Welding of HDPE pipe section continues.

2. Raw Water Transmission Main (GMP6)
   - GMP 6 was approved at the May 20th board meeting. Purchase Order received August 10th.
   - Vendors are working on submittals for their scope of work.
3. Finish Water Transmission Main (GMP7)
   - GMP 7 has been submitted for review by Brown and Caldwell. Negotiations continue.

HASKELL CDM Smith

City of Riviera Beach, Permit Tracker

Permit Identification	Vendor	Agency Level	Status	Permit #	Issued Date	Expiration Date	Comments
GMP 2: SAS + FAS Early Offsite Wells							
SAS1 2015A - Temporay Fence Permit	**Lox**	**Local**	**APPROVED**	**FSW-25-0004**	**2/18/2025**	**1/27/2027**	
SAS1 2015A - Erosion Control Permit	**Lox**	**Local**	**APPROVED**	**SW-25-0003**	**2/18/2025**	**1/27/2027**	
SAS1 2015A - Site Development Primary Permit *1693 W 29th Street, Riviera Beach, FL 33404*	**JV**	**Local**	**APPROVED**	**SD-25-0012**	**3/3/2026**	**12/21/2026**	
SAS1 2015A - Electrical Sub-Trade Permit	**Brown Electrical**	**Local**	**APPROVED**	**SUB-26-0100**	**3/3/2026**	**1/27/2027**	
SAS1 2015A - Plumbing Sub-Trade Permit	**Haskell**	**Local**	**APPROVED**	**SUB-26-0285**	**5/27/2026**	**3/24/2027**	
SAS1 2015A - Fencing Sub-Trade Permit	**Tropic Fence**	**Local**	**APPROVED**	**SUB-26-0172**	**4/7/2026**	**12/21/2026**	
SAS1 2015A - Site Lighting (Security) Sub-Trade Permit	**Broadcast Systems**	**Local**	**IN REVIEW**				9/28/26: All site lighting permits have been submitted, awaiting processing from CRB.
SAS 2015A - Authorization to Connect Water and Sewer Services and Establishment of Stormwater Fees	**JV**	**Local**	**APPROVED**	**N/A**	**N/A**	**N/A**	9/1/26: Accounts have been set up by Josh Niemann. The JV will notify Mr. Niemann when the meter is needed. The meter has been installed at 2015-A.
SAS1 2015A - Water Use Permit	**JV**	**State**	**APPROVED**	**50-00460-W**	**2/15/2024**	**2/15/2053**	
SAS1 2015A - Well Construction Permit	**JV**	**State**	**APPROVED**	**59-3090455**	**3/11/2025**	**No official expiration date**	
SAS1 2015A - Generic NPDES Permit	**JV**	**State**	**APPROVED**	**FLG073972**	**4/4/2024**	**4/3/2029**	
SAS2 FASS Ave U 2015B - Temporary Fence Permit	**Lox**	**Local**	**APPROVED**	**FSW-25-0003**	**2/18/2025**	**2/8/2027**	
SAS2 FASS Ave U 2015B - Erosion Control Permit	**Lox**	**Local**	**APPROVED**	**SW-25-0002**	**2/18/2025**	**2/8/2027**	
SAS2 FASS Ave U 2015B - FDOT Utility Permit	**JV**	**State**	**APPROVED**				
SAS2 FASS Ave U 2015B - Site Plan Approval	**JV**	**Local**	**ON HOLD**	**SP-24-0023**	**Pending**	**Pending**	8/3/26: Reviewer comments are out of date, will discuss with CRB tomorrow. 8/4/26: Mr. Grimm mentioned he will check to see whether the JV needs to submit documentation confirming the removal of the maintenance facility from the project scope. 8/11/26: JV to submit a site plan amendment through the portal, along with a narrative and revised site plan indicating that the Maintenance Building is no longer included in the scope of work. 8/18/26: MB to re-check and see if there is any way to submit additional information through the portal. (there is nowhere to submit additional info through portal) **9/1/26: CDM will use as-builts + narrative as documentation to show that Maintenance building is no longer apart of the scope and closeout standing comment.** 10/1/16: Revised electrical sheets submitted.
SAS2 FASS Ave U 2015B -Site Development Primary Permit *909 Avenue U, Riviera Beach, FL 33404*	**JV**	**Local**	**APPROVED**	**SD-25-0011**	**10/28/2025**	**11/4/2026**	
SAS2 FASS Ave U 2015B - Electrical Sub-Trade Permit	**Brown Electrical**	**Local**	**APPROVED**	**SUB-25-0526**	**10/28/2025**	**11/10/2026**	
SAS2 FASS Ave U 2015B - Plumbing Sub-Trade Permit	**Haskell**	**Local**	**APPROVED**	**SUB-25-0525**	**10/28/2025**	**11/10/2026**	
SAS2 FASS Ave U 2015B - Fencing Sub-Trade Permit	**Tropic Fence**	**Local**	**APPROVED**	**SUB-26-0015**	**1/15/2026**	**11/20/2026**	
SAS2 FASS Ave U 2015B - Site Lighting (Security) Sub-Trade Permit	**Broadcast Systems**	**Local**	**IN REVIEW**				
SAS2 FASS Ave U 2015B - Authorization to Connect Water and Sewer Services and Establishment of Stormwater Fees	**JV**	**Local**	**APPROVED**	**N/A**	**N/A**	**N/A**	9/1/26: The account has been set up with Customer Service. The JV just needs to notify Mr. Niemann when the meter is needed.
SAS2 FASS Ave U 2015B -Generator Permit	**Brown Electrical**	**Local**	**APPROVED**	**GEN-26-0002**	**8/12/2026**	**2/8/2027**	7/23/26: Submitted by Brown Electric 8/4/26: The permit has been approved and is available for pick-up from the City of Riviera Beach Permit Technician. 8/6/26: CRB needs Brown's updated COI/Workman's comp + $8,400 fee before issuing permit. 8/11/26: Ms. Garcia will handle confirming our permit fee exemption, as the City was not initially aware that we were exempt from the fee. 8/12/26: Permit Issued**, Ms. Garcia mentioned seperate permit will likely be needed for the tank.**
SAS2 FASS Ave U 2015B - Water Use Permit	**JV**	**State**	**APPROVED**	**50-00460-W**	**2/15/2024**	**2/15/2053**	
SAS2 FASS Ave U 2015B - Well Construction Permit	**JV**	**State**	**APPROVED**	**59-3090467 & 59-3090469**	**3/11/2025**	**No official expiration date**	
SAS2 FASS Ave U 2015B - Generic NPDES Permit	**JV**	**State**	**APPROVED**	**FLG073972**	**4/4/2024**	**4/3/2029**	
FAS-1 - Temporay Fence Permit	**Lox**	**Local**	**APPROVED**	**FSW-25-0002**	**2/18/2025**	**2/8/2027**	
FAS-1 - Erosion Control Permit	**Lox**	**Local**	**APPROVED**	**SW-25-0001**	**2/18/2025**	**2/8/2027**	
FAS-1 - Site Development Primary Permit *2391 Avenue L, Riviera Beach, FL 33404*	**JV**	**Local**	**APPROVED**	**SD-25-0013**	**11/18/2025**	**11/4/2026**	
FAS-1 - Electrical Sub-Trade Permit	**Brown Electrical**	**Local**	**APPROVED**	**SUB-25-0578**	**11/18/2025**	**11/16/2026**	
FAS-1 - Electrical Commerical Permit (Description: Temp Power)	**Brown Electrical**	**Local**	**APPROVED**	**E-26-0049**	**8/12/2026**	**2/8/2027**	
FAS-1 - Plumbing Sub-Trade Permit	**Haskell**	**Local**	**APPROVED**	**SUB-25-0579**	**11/18/2025**	**11/13/2026**	
FAS-1 - Fencing Sub-Trade Permit	**Tropic Fence**	**Local**	**APPROVED**	**SUB-26-0240**	**5/8/2026**	**11/24/2026**	
FAS-1 -Site Lighting (Security) Sub-Trade Permit	**Broadcast Systems**	**Local**	**IN REVIEW**				
FAS-1 - Authorization to Connect Water and Sewer Services and Establishment of Stormwater Fees	**JV**	**Local**	**APPROVED**	**N/A**	**N/A**	**N/A**	9/1/26: The account has been set up with Customer Service. The JV just needs to notify Mr. Niemann when the meter is needed.
FAS-1 - Water Use Permit	**JV**	**State**	**APPROVED**	**50-00460-W**	**2/15/2024**	**2/15/2053**	
FAS-1 - Well Construction Permit	**JV**	**State**	**APPROVED**	**59-3090464**	**3/11/2025**	**No official expiration date**	
FAS-1 - Generic NPDES Permit	**JV**	**State**	**APPROVED**	**FLG073968**	**4/3/2024**	**4/2/2029**	
GMP 3: Balance of FAS Offsite Wells							
FAS-2 - Temporay Fence ROW Permit	**Lox**	**Local**	**APPROVED**	**ROW-25-0052**	**11/17/2025**	**12/4/2026**	
FAS-2 - Clearing Permit	**Lox**	**Local**	**APPROVED**	**CLR-25-0003**	**11/17/2025**	**12/4/2026**	
FAS-2 - Erosion Control Permit	**Lox**	**Local**	**APPROVED**	**SW-25-0006**	**8/25/2025**	**12/4/2026**	
FAS-2 - Site Development ROW Primary Permit *S of Blue Heron, W of Ave R, E of W 22nd St, Riviera Beach, FL 33404*	**JV**	**Local**	**APPROVED**	**ROW-25-0057**	**5/4/2026**	**11/23/2026**	
FAS-2 - Electrical Sub-Trade Permit	**Brown Electrical**	**Local**	**APPROVED**	**SUB-26-0225**	**5/4/2026**	**11/23/2026**	
FAS-2 - Plumbing Sub-Trade Permit	**Haskell**	**Local**	**APPROVED**	**SUB-26-0287**	**5/27/2026**	**11/23/2026**	
FAS-2 - Fencing Sub-Trade Permit	**Tropic Fence**	**Local**	**APPROVED**	**SUB-26-0226**	**5/4/2026**	**11/23/2026**	
FAS-2 - Site Lighting (Security) Sub-Trade Permit	**Broadcast Systems**	**Local**	**IN REVIEW**				
FAS-2 - Authorization to Connect Water and Sewer Services and Establishment of Stormwater Fees	**JV**	**Local**	**APPROVED**	**N/A**	**N/A**	**N/A**	9/1/26: The account has been set up with Customer Service. The JV just needs to notify Mr. Niemann when the meter is needed.
FAS-2 - FDOT General Use Permit - Blue Heron Blvd	**Lox**	**Local**	**APPROVED**	**2026-K-496-00166**	**9/14/2026**		
FAS-2 - Water Use Permit	**JV**	**State**	**APPROVED**	**50-00460-W**	**2/15/2024**	**2/15/2053**	
FAS-2 - Well Construction Permit	**JV**	**State**	**APPROVED**	**59-3151612**	**7/23/2025**	**No official expiration date**	
FAS-2 - Generic NPDES Permit	**JV**	**State**	**APPROVED**	**FLG073969**	**4/1/2024**	**3/31/2029**	

FAS-3 - Temporay Fence Permit	**Lox**	**Local**	**APPROVED**	**TS-25-0003**	**11/5/2025**	**12/4/2026**	
FAS-3 - Clearing Permit	**Lox**	**Local**	**APPROVED**	**CLR-25-0004**	**11/5/2025**	**12/4/2026**	
FAS-3 - Erosion Control Permit	**Lox**	**Local**	**APPROVED**	**SW-25-0008**	**11/5/2025**	**12/4/2026**	
FAS-3 - FEC Rail Permit	**JV**	**State**	**VOIDED**	**VOID**	**VOID**	**VOID**	Permit no longer needed
FAS-3 - Site Development Primary Permit *W 15th St & Ave R, Riviera Beach, FL 33404*	**JV**	**Local**	**APPROVED**	**SD-26-0005**	**8/19/2026**	**2/15/2027**	4/20/26: Submitted 7/21/26: CDM ball in court, in process of addressing comment from Richard Gallant. Aiming to resubmit to CRB this week. 7/27/26: Connor King will stamp FAS-3 revision drawings tomorrow and I will submit to CRB permit office. 7/28/26: MB submitted revised drawings in response to reviewer comments. 8/4/26: Under review by the Utilities Dept. All other departments have approved the application. Mr. Baker will reach out to Mr. Gallant this week, as he is currently on PTO. 8/11/26: Still in Utilities court, Mr. Niemann to follow up with Mr. Gallant. 8/11/26: Application has been approved by all departments. 8/19/26: Permit Issued.
FAS-3 - W 15th Street ROW Permit (Temp) ***(All improvements on West 15th Street including GMP 6)***	**JV**	**Local**	**APPROVED**	**ROW-26-0037**	**8/19/2026**	**2/15/2027**	7/17/26: Submitted 8/4/26: Under simultaneous review by the Utilities and Engineering Departments. (digital submission) 8/13/26: Approved by both Utilities and Engineering, not yet officially issued. 8/19/26: Permit Issued. 9/29/26: JV to submit new documentation to clarify scope. 10/2/26: ROW permit organization letter emailed to Ms. Garcia for Mr. Bailey's clarification. 10/6/26: JV to submit drawing sheets showing only the specific scope of work for the respective ROW permit. **11/3/26: Updated drawing package emailed to Ms. Garcia for uploading.**
FAS-3 - Electrical Sub-Trade Permit	**Brown Electrical**	**Local**	**APPROVED**	**SUB-25-0576**	**11/18/2025**	**11/16/2026**	
FAS-3 - Plumbing Sub-Trade Permit	**Haskell**	**Local**	**APPROVED**	**SUB-25-0577**	**11/18/2025**	**11/13/2026**	
FAS-3 - Fencing Sub-Trade Permit	**Tropic Fence**	**Local**	**APPROVED**	**SUB-26-0244**	**5/13/2026**	**11/9/2026**	
FAS-3 - Site Lighting (Security) Sub-Trade Permit	**Broadcast Systems**	**Local**	**IN REVIEW**				
FAS-3 - Authorization to Connect Water and Sewer Services and Establishment of Stormwater Fees	**JV**	**Local**	**APPROVED**	**N/A**	**N/A**	**N/A**	9/1/26: The account has been set up with Customer Service. The JV just needs to notify Mr. Niemann when the meter is needed.
FAS-3 - Water Use Permit	**JV**	**State**	**APPROVED**	**50-00460-W**	**2/15/2024**	**2/15/2053**	
FAS-3 - Well Construction Permit	**JV**	**State**	**APPROVED**	**59-3151597**	**7/23/2025**	**No official expiration date**	
FAS-3 - Generic NPDES Permit	**JV**	**State**	**APPROVED**	**FLG073970**	**4/4/2024**	**4/3/2029**	
FAS-4 - Temporay Fence Permit	**Lox**	**Local**	**APPROVED**	**TS-25-0002**	**10/1/2025**	**12/4/2026**	
FAS-4 - Clearing Permit	**Lox**	**Local**	**APPROVED**	**CLR-25-0005**	**10/1/2025**	**12/4/2026**	
FAS-4 - Erosion Control Permit	**Lox**	**Local**	**APPROVED**	**SW-25-0007**	**10/1/2025**	**12/4/2026**	
FAS-4 - Site Plan Approval Permit	**JV**	**Local**	**APPROVED**	**SP-25-0018**	**2/10/2026**	**N/A**	7/28/26: Michael Grimm mentioned he will check with Juan to see if a physically stamped copy is available fo pickup. 8/4/26: Juan is checking to determine whether a stamped set is available for pick-up. 8/5/26: Mr. Grimm emailed stamped site plan.
FAS-4 - Site Development Primary Permit *1480 Dr. MLK Jr Blvd, Riviera Beach, FL 33404*	**JV**	**Local**	**APPROVED**	**SD-25-0015**	**3/3/2026**	**11/23/2026**	
FAS-4 - ROW Permit ***(GMP 6 work at Dan Calloway Park - STA 800+00 to 812+00)***	**JV**	**Local**	**IN REVIEW**	**ROW-26-0043**			9/1/26: Submitted 9/8/26: Pending review by Utilities and Engineering dept. 9/15/26: Approved by all departments.. 9/29/26: JV to submit new documentation to clarify scope. 10/2/26: ROW permit organization letter emailed to Ms. Garcia for Mr. Bailey's clarification. 10/6/26: JV to submit drawing sheets showing only the specific scope of work for the respective ROW permit. **11/3/26: Updated drawing package emailed to Ms. Garcia for uploading.**
FAS-4 - Electrical Sub-Trade Permit	**Brown Electrical**	**Local**	**APPROVED**	**SUB-26-0101**	**3/3/2026**	**11/23/2026**	
FAS-4 -Plumbing Sub-Trade Permit	**Haskell**	**Local**	**APPROVED**	**SUB-26-0286**	**5/27/2026**	**11/23/2026**	
FAS-4 - Fencing Sub-Trade Permit	**Tropic Fence**	**Local**	**APPROVED**	**SUB-26-0173**	**4/7/2026**	**11/23/2026**	
FAS-4 - Site Lighting (Security) Sub-Trade Permit	**Broadcast Systems**	**Local**	**IN REVIEW**				
FAS-4 - Authorization to Connect Water and Sewer Services and Establishment of Stormwater Fees	**JV**	**Local**	**APPROVED**	**N/A**	**N/A**	**N/A**	9/1/26: The account has been set up with Customer Service. The JV just needs to notify Mr. Niemann when the meter is needed.
FAS-4 - FDOT General Use Permit - MLK Blvd	**Lox**	**Local**	**APPROVED**	**2026-H-496-00442**			
FAS-4 - Water Use Permit	**JV**	**State**	**APPROVED**	**50-00460-W**	**2/15/2024**	**2/15/2053**	
FAS-4 - Well Construction Permit	**JV**	**State**	**APPROVED**	**59-3151620**	**7/23/2025**	**No official expiration date**	
FAS-4 - Generic NPDES Permit	**JV**	**State**	**APPROVED**	**FLG073971**	**4/5/2024**	**4/4/2029**	
FAS-6 - Temporay Fence Permit	**Lox**	**Local**	**APPROVED**	**TS-26-0002**	**6/26/2026**	**12/23/2026**	
FAS-6 - Clearing Permit	**Lox**	**Local**	**APPROVED**	**CLR-26-0001**	**6/26/2026**	**12/23/2026**	
FAS-6 -Erosion Control Permit	**Lox**	**Local**	**APPROVED**	**SW-26-0002**	**6/26/2026**	**12/23/2026**	
FAS-6 - Demo Permit	**JV**	**Local**	**APPROVED**	**B-26-0143**	**8/12/2026**	**2/8/2027**	6/4/26: Submitted 7/21/26: Per CRB, application has been routed to engineering on 7/17/26, when returned to Building Division Building Official will review for all trades and expedite with Zoning and Fire. 7/22/26: Approved by Engineering 7/23/26: Approved by Fire 7/28/26: Passed Engineering review and is now under review by Zoning. 8/4/26: Currently under review by Building Dept. 8/5/26: Application is in the final process before permit issuance. 8/11/26: JV confirmed with Ms. Garcia that this permit is only for the demolition work. The full drawing set was submitted, so Ms. Garcia mentioned that she will remove the additional sheets and have the permit available for pickup by the end of this week. 8/12/26: Permit Issued
FAS-6 - Site Development Primary Permit *Avenue P (Dan Calloway Recreation Field), Riviera Beach, FL 33404/* *1420 W 10th St, Riviera Beach, FL 33404*	**JV**	**Local**	**APPROVED**	**SD-26-0006**	**10/27/2026**	**4/26/2027**	6/17/26: Submitted 7/15/26: Required physical plan sets, updated Certificate of Insurance (COI), and application signed by Josh Niemann were provided. 7/17/26: Approved by Engineering, requires resubmission by Utilities. 7/20/26: Approved by Zoning 7/21/26: Approved by Fire 7/28/26: Michael Grimm emailed us the reviewer comment from Utilities as we were previously unable to see it. CDM is in process of addressing. 8/4/26: Following the meeting this morning, CDM is currently working to address the review comment. JV to get top elevation. 8/11/26: Elevations are being taken today and tomorrow that will help CDM design finalize response to reviewer comments. *9/1/26: JV is forming response after recieving clarifications from Mr. Niemann.* 9/14/26: MB to ask CRB if this permit can be issued following clarifications from Mr. Niemann. 9/15/26: JV to submit narrative to Ms. Garcia for Mr. Gallant to change his reviewer response. (Put sleeve on sanitary 4" line) 9/21/26: MB emailed formal response to Ms. Garcia for Mr. Gallant to approve. 9/22/26: Currently in Mr. Gallant's ball-in-court for approval. 10/14/26: Approved by all departments, awaiting final issuance. 10/27/26: Issued
FAS-6 - Electrical Sub-Trade Permit	**Brown Electrical**	**Local**	**APPROVED**	**SUB-26-0598**	**10/28/2026**	**4/26/2027**	
FAS-6 - Plumbing Sub-Trade Permit	**Haskell**	**Local**	**NOT SUBMITTED**				Awaiting subcontractor submission

FAS-6 - Fencing Sub-Trade Permit	**Tropic Fence**	**Local**	**NOT SUBMITTED**				Awaiting subcontractor submission
FAS-6 - Site Lighting (Security) Sub-Trade Permit	**Broadcast Systems**	**Local**	**NOT SUBMITTED**				Awaiting subcontractor submission
FAS-6 - Authorization to Connect Water and Sewer Services and Establishment of Stormwater Fees	**JV**	**Local**	**APPROVED**	**N/A**	**N/A**	**N/A**	9/1/26: The account has been set up with Customer Service. The JV just needs to notify Mr. Niemann when the meter is needed.
FAS-6 - Water Use Permit	**JV**	**State**	**APPROVED**	**50-00460-W**	**2/15/2024**	**2/15/2053**	
FAS-6 - Well Construction Permit	**JV**	**State**	**APPROVED**	**59-3151616**	**7/23/2025**	**No official expiration date**	
FAS-6 - Generic NPDES Permit	**JV**	**State**	**APPROVED**	**FLG073973**	**4/5/2024**	**4/4/2029**	

City of Riviera Beach, Permit Tracker

Permit Identification	Vendor	Agency	Status	Permit #	Issued Date	Expiration Date	Detailed Updates
GMP 5							
Avenue L Site Development Permit *2391 Avenue L, Riviera Beach, FL 33404*	JV	Local	APPROVED	SD-26-0003	8/19/2026	2/15/2027	4/9/26: Submitted 5/1/26: CRB requested markup-enabled drawings. 5/13/26: Flash drives containing mark-up enabled plan sets were submitted. 7/10/26: Richard Gallant requested additional permit documentation, which was provided the following day. We are currently awaitir 7/21/26: Has been approved by Fire, Zoning, Building and Utilities. Engineering has not yet approved. 7/24/26: Terrance Bailey provided comments and suggested scheduling a call with Vipin and the EOR to discuss them on 7/27/26. Hov the EOR will likely need additional time to review the comments and prepare responses. Vipin mentioned that the comments may ins meeting with the City. 8/3/26: Vipin has responded to Terrence's comments through email with revised civil sheets. 8/5/26: MB to follow-up with Mr. Bailey through email to see if he has any further comments. 8/11/26: Mr. Bailey mentioned he would take a look at the full package submitted by MB on flash drive. 8/12/26: Michael Bellamy submitted S&S Ave L Roadway Drainage Improvements as additional documentation per Mr. Bailey's reques 8/13/26: We received a permit corrections report indicating that Zoning has an outstanding comment that still needs to be addressed mentioned during Tuesday's meeting that he would coordinate with him regarding the PLAT issue that Mr. Thompson had previously approved the permit. MB followed up with Ms. Garcia regarding the next steps for permit issuance, as it appears all departments have 8/14/26: Ms. Garcia confirms all departments have approved, drawings just need to be stamped before final issuance. 8/19/26: Permit Issued
Avenue L ROW Permit **(All Improvements on Avenue L GMP 5, 6 and 7)** *2391 Avenue L, Riviera Beach, FL 33404*	JV	Local	UNDER REVIEW	ROW-26-0042	N/A	N/A	9/8/26: Approved by Utilities dept, under review by Engineering dept. 9/16/26: Engineering dept requires resubmission "Resubmit with an updated scope and project limits". 9/29/26: JV to submit new documentation to clarify scope. 10/2/26: ROW permit organization letter emailed to Ms. Garcia for Mr. Bailey's clarification. 10/6/26: JV to submit drawing sheets showing only the specific scope of work for the respective ROW permit. **11/3/26: Updated drawing package emailed to Ms. Garcia for uploading.**
Avenue L Temporary Power Permit *2391 Avenue L, Riviera Beach, FL 33404*	Brown Electrical	Local	APPROVED	E-26-0049	8/12/2026	4/6/2027	8/12/26: Permit Issued
Avenue L Electrical Permit **(Installation of ductbanks and manholes, pulling of wire for electrical installation)** *2391 Avenue L, Riviera Beach, FL 33404*	CCI Electrical	Local	UNDER REVIEW	E-26-0076	N/A	N/A	10/5/26: Permit approved, awaiting official issuance.
High Service Pump Station Building Permit *2391 Avenue L, Riviera Beach, FL 33404*	JV	Local	APPROVED	B-26-0208	9/15/2026	3/14/2027	7/15/26: S&S plans were sent out to UES to stamp. 7/22/26: Stamped plans received from UES 7/27/26: CDM is currently preparing permit application, awaiting Josh's signature on application. 8/3/26: Josh signed permit application form. 8/5/26: MB attempted to submit the building permit application; however, the Ms. Garcia requested revisions to the building 8/11/26: Francis is revising permit application. 8/12/26: Permit Application package submitted to CRB 8/17/26: Official application review began per the CRB portal. Additional documentation was requested and subsequently pro accordance with Florida Statute. 8/25/26: Approved by Engineering and Building Dept(s), awaiting approval from Utilities, Zoning, and Fire Dept(s). 9/1/26: Pending approval from Fire Dept. 9/10/26: Approved by all departments. Currently awaiting Mr. Niemann's signature on Written Letter from Owner Authorizing submitted to the City for permit issuance. 9/14/26: MB sent Written Letter from Owner Authorizing Applicant to Use Private Provider to Ms. Garcia, awaitng permit issu 9/15/26: Permit Issued
High Service Pump Station Electrical Sub-Permit *2391 Avenue L, Riviera Beach, FL 33404*	CCI Electrical	Local	NOT SUBMITTED				CCI Electrical is preparing submission
High Service Pump Station Plumbing Sub-Permit *2391 Avenue L, Riviera Beach, FL 33404*	Haskell	Local	NOT SUBMITTED				
Electrical & Generator Building Permit *2391 Avenue L, Riviera Beach, FL 33404*	JV	Local	APPROVED	B-26-0207	9/17/2026	3/16/2027	7/27/26: CDM is currently coordinating with UES on last round of comments, also awaiting Josh's signature on application. 8/3/26: S&S plans were sent to UES to stamp + Josh signed permit application form. 8/7/26: Stamped plans received from UES, CDM preparing application. 8/11/26: Francis is revising permit application. 8/12/26: Permit Application submitted to CRB, issuance due 8/26. 8/17/26: Official application review began per the CRB portal. Additional documentation was requested and subsequently pro accordance with Florida Statute. 8/20/26: Ms. Garcia requested a copy of the stamped geotechnical letter and design report prepared by the private provider, 8/25/26: Approved by Engineering and Building Dept(s), awaiting approval from Utilities, Zoning, and Fire Dept(s). 9/1/26: Pending approval from Utilites and Fire Dept(s). 9/8/26: Approved by all departments. Currently awaiting Mr. Niemann's signature on the Written Letter from Owner Authoriz submitted to the City for permit issuance. 9/14/26: MB sent Written Letter from Owner Authorizing Applicant to Use Private Provider to Ms. Garcia, awaitng permit issu 9/17/26: Permit Issued
Electrical and Generator Electrical Sub-Permit *2391 Avenue L, Riviera Beach, FL 33404*	CCI Electrical	Local	NOT SUBMITTED				CCI Electrical is preparing submission
Electrical and Generator Electrical Sub-Permit *2391 Avenue L, Riviera Beach, FL 33404*	Haskell	Local	NOT SUBMITTED				
Guardhouse Building Permit *2391 Avenue L, Riviera Beach, FL 33404*	JV	Local	APPROVED	B-26-0206	9/28/2026	3/27/2027	7/15/26: S&S plans were sent out to UES to stamp. 7/27/26: Stamped plans received from UES 7/27/26: CDM is currently preparing permit application, awaiting Josh's signature on application. 8/3/26: Josh signed permit application form. 8/5/26: MB went to go submit for building permit but Ms. Garcia said edits needs to be made to application form. 8/5/26: MB attempted to submit the building permit application; however, the Ms. Garcia requested revisions to the building 8/11/26: Francis is revising permit application. 8/12/26: Permit Application submitted to CRB, issuance due 8/26. 8/17/26: Official application review began per the CRB portal. Additional documentation was requested and subsequently pro accordance with Florida Statute. 8/25/26: Approved by Engineering and Building Dept(s), awaiting approval from Utilities, Zoning, and Fire Dept(s). 9/1/26: Pending approval from Fire Dept. 9/22/26: Approved by all departments, permit to be issued in the next few days. 9/28/26: Permit Issued
Guardhouse Electrical Sub-Permit *2391 Avenue L, Riviera Beach, FL 33404*	CCI Electrical	Local	NOT SUBMITTED				CCI Electrical is preparing submission
Guardhouse Plumbing Sub-Permit *2391 Avenue L, Riviera Beach, FL 33404*	Haskell	Local	NOT SUBMITTED				
Admin-Membrane Building Permit *2391 Avenue L, Riviera Beach, FL 33404*	JV	Local	APPROVED	B-26-0224	N/A	N/A	7/20/26: CDM's Geotech team is currently reviewing the submission from Menard and will submit the Membrane Building per (hopefully by the end of this week) 7/24/26: CDM sent design to UES for approval, awaiting feedback. 8/12/26: UES provided comments to CDM, CDM is now addressing. 8/17/26: CDM addressed UES comments and re-submitted to UES, under review. (complete with Menard design) 8/25/26: CDM to submit the S&S drawings to UES today. The landscaping sheets will follow at a later date, as someone from H complete package to the City early next week. 8/28/26: Package has been stamped by UES, awaiting Josh Niemann's signature on application form before submitting. 9/1/26: Permit Application submitted to CRB. 9/3/26: Zoning and Utilities have approved. Pending Fire, Engineering, and Building for Flood and Private Provider Document 9/8/26: Pending Fire and Engineering dept review. 9/15/26: Pending Engineering dept review. Mr. Bailey provided comments through email. 9/22/26: JV responded to Mr. Bailey's emailed comments, awaiting further comments/approval. 10/2/26: Permit Commitment Letter emailed to Ms. Garcia to initiate the next review cycle and obtain Mr. Bailey's approval, M Mr. Bailey, awaiting his approval. 10/16/26: Permit has been approved by all departments. Art in Public Places fee of $594,023.11 is now due before issuance, p 10/21/26: JV to write check for AIPP fees. 10/27/26: AIPP fees paid, permit issued.
Admin-Membrane Electrical Sub-Permit *2391 Avenue L, Riviera Beach, FL 33404*	CCI Electrical	Local	NOT SUBMITTED				CCI Electrical is preparing submission
Admin-Membrane Plumbing Sub-Permit *2391 Avenue L, Riviera Beach, FL 33404*	Haskell	Local	NOT SUBMITTED				
Pre-Treatment Building Permit *2391 Avenue L, Riviera Beach, FL 33404*	JV	Local	IN REVIEW - CRB	B-26-0238	N/A	N/A	7/28/26: Design is expected from Menard tomorrow 7/30/26: Design was sent to CDM from Menard, currently under review by CDM before submission to UES. 8/12/26: CDM submitted design package to UES without Menard drawings, under review by UES. 8/18/26: Menard resubmitted foundations design to CDM. 9/2/26: Menard sent signed and sealed foundations design to CDM, CDM to send to UES. 9/15/26: Foundation design has been included in the package. UES has provided comments, and CDM is targeting resubmittal 9/21/26: CDM responded to UES comments, awaiting approval. 9/29/26: CDM is preparing S&S drawings for UES final stamping. 10/5/26: S&S drawings sent to UES for stamping, will then be submitted to the City. 10/13/26: Stamped drawings expected from UES today, MB to submit to City. 10/14/26: Submitted to CRB Online Portal, CRB receipt confirmed. **10/27/26: Fire dept to start review today.**
Degasifier-Clearwell Building Permit *2391 Avenue L, Riviera Beach, FL 33404*	JV	Local	IN REVIEW - CRB	B-26-0239	N/A	N/A	7/28/26: Design is expected from Menard tomorrow 7/30/26: Design was sent to CDM from Menard, currently under review by CDM before submission to UES. 8/12/26: CDM submitted design package to UES without Menard drawings, under review by UES. 8/28/26: Menard resubmitted foundations design to CDM. 9/2/26: Menard sent signed and sealed foundations design to CDM, CDM to send to UES. 9/15/26: Foundation design has been included in the package. UES has provided comments, and CDM is targeting resubmittal 9/21/26: CDM responded to UES comments, awaiting approval. 9/29/26: CDM is preparing S&S drawings for UES final stamping. 10/5/26: S&S drawings sent to UES for stamping, will then be submitted to the City. 10/13/26: Stamped drawings expected from UES today, MB to submit to City. 10/14/26: Submitted to CRB Online Portal, CRB receipt confirmed. **10/27/26: Fire and Engineering dept have approved, remaining departments to follow.**

Chemical Storage Building Permit *2391 Avenue L, Riviera Beach, FL 33404*	**JV**	**Local**	**IN REVIEW - CRB**	**B-26-0240**	**N/A**	**N/A**	8/3/26: Brad provided Menard with their requested clarifications. If Menard has no further questions, they will proceed with 8/11/26: CDM is currently reviewing design from Menard. 8/12/26: CDM submitted design package to UES without Menard drawings, under review by UES. 8/25/26: Menard to submit foundations design to CDM this week. 9/1/26: Menard sent foundations design to CDM, under CDM review. 9/15/26: UES has provided comments, CDM is targeting resubmittal early next week. 9/21/26: CDM responded to UES comments, awaiting approval. 9/29/26: CDM is preparing S&S drawings for UES final stamping. 10/5/26: S&S drawings sent to UES for stamping, will then be submitted to the City. 10/16/26: Stamped drawings recieved from UES. 10/16/26: Submitted to CRB Online Portal. **10/27/26: Departments have not begun review.**
Ground Storage Tank Building Permit *2391 Avenue L, Riviera Beach, FL 33404*	**JV**	**Local**	**NOT SUBMITTED**	**N/A**	**N/A**	**N/A**	8/11/26: Menard is working on design, CROM is working on shop drawings requested by Menard. 9/1/26: Menard has all necessary information to produce their foundations design. 9/8/26: CDM would also like to see the CROM shop drawings. Brad is anticipating receiving the design from Menard this week 9/14/26: Menard submitted foundations design for CDM review, awaiting official CROM shop drawings. 10/6/26: Back in Menard's court for foundations design, awaiting upated shop drawings from CROM. 10/12/26: Menard's foundations design was resubmitted to CDM for review 10/26/26: Foundations design has been acknolwdged by CDM. **11/3/26: CROM stamped shop drawings have been received by CROM, will be submitted to CDM this week.**
Bus Shelter Building Permit *2391 Avenue L, Riviera Beach, FL 33404*	**JV**	**Local**	**IN REVIEW - UES**	**B-26-0258**	**N/A**	**N/A**	9/29/26: Permit application form sent to Ms. Garcia for formulation of permit #. 10/13/26: Permit # has been generated by Ms. Garcia, plans will be uploaded when they are ready. 10/20/26: Package has been submitted to UES. **11/3/26: UES gave green light to send them S&S package for stamping.**
Generator Permit	**JV**	**Local**	**NOT SUBMITTED**	**N/A**	**N/A**	**N/A**	9/8/26: The generator selection process is ongoing and nearing completion. Emilio, Vipin, and the respective vendors are con exchanged and addressed. 9/15/26: CDM is reviewing responses from CAT and Cummins and will provide a recommendation for Brown and Caldwell's ci 9/22/26: Nigel Grace and Josh Niemann would like recommendation and rationale from EOR before making final decision. 9/29/26: PO for Cummins is in process. 10/6/26: PO is expected to be issued to Cummins today. 10/13/26: PO has been sent to Cummins. **11/3/26: Submittals are in progress.**
FDEP Generator Tank Registration	**JV**	**State**	**NOT SUBMITTED**	**N/A**	**N/A**	**N/A**	
Big Dee Paving							
FDOT Roaway/Lane Closure Permit - Avenue L	**Big Dee Paving**	**State**	**APPROVED**	**2024-A-496-00073**	**9/10/2026**		8/14/26: Application has been resubmitted in response to reviewer comments and is under review, MB has requested update 9/10/26: Approved

City of Riviera Beach, Permit Tracker

Permit Identification	Agency	Status	Permit #	Issued Date	Expiration Date	Comments
GMP 6: RWTM (Well-sites to WTF)						
GMP 6 Canal ROW Permit (for the GMP 6 canal work only, Drawings C-2 to C-8 STA 100+00 to STA 432+00)	CRB Public Works	IN REVIEW	ROW-26-0033	Pending	Pending	6/16/26: Submitted 7/21/26: CRB mentioned these applications have not been routed to them. 7/28/26: Under review by Utilities, will then be routed to Engineering for review. 8/4/26: Under review by Engineering Dept and will not require review by Zoning Dept. 8/11/26: Approved by Utilities, now under review by Engineering Dept. 9/8/26: Remains under review by Engineering Dept, as Mr. Bailey let us know that there's a c 26-0032. 9/25/26: Meeting scheduled for Monday to discuss the Right-of-Way permit scopes, as Mr. B clarification. 9/29/26: JV to submit new documentation to clarify scope. 10/2/26: ROW permit organization letter emailed to Ms. Garcia for Mr. Bailey's clarification. 10/6/26: JV to submit drawing sheets showing only the specific scope of work for the respect **11/2/26: Revised Drawing Package submitted.**
FEC (6 Crossings - Trenchless)	FEC	APPROVED				8/7/26: 4 of 6 have been approved
FEC (F3 Open-Trench) W 15th Street	FEC	REJECTED				
Notice of Intent to Use the General Permit for Construction of Water Main Extensions for Public Water Systems	FDEP/PBC	APPROVED		4/26/2026		4/26/26: Approved
Utility/MOT ROW Permit (Raw Water)	FDOT	APPROVED	2026-H-496-00092	9/9/2026		2/11/26: Submitted 9/9/26: Approved
GMP 7: FWTM (WTF to Plant)						
Obama Highway and 27th Street ROW Permit (North Barack Obama Highway / West 27th Street GMP 5, 6, and 7)	CRB Public Works	IN REVIEW	ROW-26-0034	Pending	Pending	6/16/26: Submitted 7/21/26: CRB mentioned these applications have not been routed to them. 7/28/26: Currently under review by Utilities, will then be routed to Engineering for review. 8/4/26: Under review by Engineering Dept and will not require review by Zoning Dept. 9/11/26: Approved by Utilities, requires resubmission by Engineering. 9/25/26: Meeting scheduled for Monday to discuss the Right-of-Way permit scopes, as Mr. B clarification. 9/29/26: JV to submit new documentation to clarify scope. 10/2/26: ROW permit organization letter emailed to Ms. Garcia for Mr. Bailey's clarification. 10/6/26: JV to submit drawing sheets showing only the specific scope of work for the respect **11/2/26: Revised Drawing Package submitted.**
Notice of Intent to Use the General Permit for Construction of Water Main Extensions for Public Water Systems (Potable Water)	FDEP/PBC	IN REVIEW				7/21/26: Submitted 8/21/26: Responded to RAI
Application for Facility/Utility Installation (Potable Water) - Barack Obama Crossing	FEC	IN REVIEW				9/24/26: Submitted
Utility/MOT ROW Permit (Potable Water)	FDOT	APPROVED	2026-H-496-00092	9/9/2026		2/11/26: Submitted 8/25/26: Provided FEC documentation to FEC 9/9/26: Approved
ROW/MOT Permit (Potable Water)	PBC	IN REVIEW				8/11/26: Submitted

GLOBALTECH
A DESIGN BUILD COMPANY

Engineers · Contractors
901 Yamato Road, Suite 220
Boca Raton, Florida 33431
Phone: (561) 997-6433; Fax: (561) 997-5811
www.globaltechdb.com

PROJECT UPDATE MEMORANDUM

To: **Honorable Mayor, Chairperson, and Board Members of the City of Riviera Beach, FL**

From: **Globaltech, Inc. (GT)**

Through: **William E. Wilkins, City Manager**

Subject: **Wellfield Rehabilitation Project Update**
Scope and Progress Update

Date: **November 3, 2026**

PROGRESS UPDATE

- **Sanitary Survey Preparation**
  - GROUP 1
    - Well 13 casing modification (access port welding install) complete.
    - Well 805 work complete: excavation, new underground isolation valve install, and above ground isolation valve replacement
    - All work complete for this task.
  - GROUP 2
    - Well 2001 – remaining minor mechanical work and misc electrical to be finished.
    - Well 801 – concrete block demoed, repatched flooring, installed new temporary sealing cover for well.
    - EMMI to be scheduled to start/finalize mechanical and electrical work for remaining wells beginning of November.
  - GROUP 3
    - To be reviewed after submission of well 802 reconstruction proposal.
- **New Proposals**
  - Well 802 Reconstruct
    - Quotes/estimates from all subcontracts received at the end of October. GT to submit proposal to RBUSD beginning of November.
  - Well 801 Linestop Addition
    - Proposal submitted (covers the following: excavation with restoration, linestop install, new underground isolation valve install, existing cracked above ground isolation valve replacement)
- **MISC**
  - Well 862 – GT reviewed FPL WELL 862 15 MIN INTERNVAL VOLTAGE HISTORY file; team is scheduling meeting between GT, RB, and FPL to discuss next steps.

Riviera Beach - Utility Special District

To: Honorable Mayor, Chairperson and Board Members

From: Joshua Niemann, Utility Special District Executive Director

Through: William Wilkins, City Manager

Subject: **Resolution Number 66-26UD: A Resolution of the Board of Directors of the City of Riviera Beach Utility Special District, Palm Beach County, Florida, awarding the Invitation to Bid (ITB) 26-018 for Aerial Crossings Rehabilitation to Razorback, LLC. in an amount not to exceed $690,858.00 from the capital infrastructure Account Number 41231104-563000, and authorizing the Utility Special District Finance Director to make payments from the capital infrastructure Account Number 41231104-563000 in an amount not to exceed $690,858.00; authorizing the Utility Special District Executive Director to approve change orders up to 10%; and providing an effective date.**

Date: November 23, 2026

CC: General Public

Background:

On February 9, 2017, BFA Environmental Consultants presented an updated report originally conducted 2010 to the Utility District in regard to the condition of the 20 aerial crossings. The consultant provided an assessment of the repairs needed for rehabilitation. In FY2023, Project Number 23036 was established for this rehabilitation project. On July 21, 2026, the Utility District issued an Invitation to Bid for contractors to affect the rehabilitation of the aerial crossings. On September 16, 2026 four vendors submitted bids for this project. One was determined to be nonresponsive and the lowest responsive bidder was Razorback, LLC. These aerial crossings convey water, wastewater, and raw water around the city. These are the above ground assets that are under constant barrage from the sun, rain, and other environmental factors. A failure of one of these components would cause environmental issues as well as

service interruptions to residents. This resolution is to award this project to Razorback, LLC and complete this project which will extend the life of these crossings in the most economical way and provide the greatest benefit for the residents.

City Goals:

The Citywide Goal is to Accelerate Operational Excellence.

Fiscal/Budget Impact:
$690,858.00

Recommendation:

Staff recommends a Motion to approve Resolution Number 66-26UD

Attachments:
1. Resolution Number 66-26UD.docx
2. 26-018 Award Recommendation Memo.cleaned.pdf
3. 26-018_Bid Tabulation Form.pdf
4. 26-018 Notice of Intent to Award Letter.cleaned.pdf
5. 26-018 Razorback Contract.docx
6. 26-018 Responsiveness Review.xlsx

Resolution Number 66-26UD

A Resolution of the Board of Directors of the City of Riviera Beach Utility Special District, Palm Beach County, Florida, awarding the Invitation to Bid (ITB) 26-018 for Aerial Crossings Rehabilitation to Razorback, LLC. in an amount not to exceed $690,858.00 from the capital infrastructure Account Number 41231104-563000, and authorizing the Utility Special District Finance Director to make payments from the capital infrastructure Account Number 41231104-563000 in an amount not to exceed $690,858.00; authorizing the Utility Special District Executive Director to approve change orders up to 10%; and providing an effective date.

WHEREAS, the Utility Special District (District) requests the use of section 16.5-61 (competitive sealed bidding) using the solicitation dated July 21, 2026, from the City of Riviera Beach Procurement Project Number 26-018 titled Aerial Pipe Crossing Rehabilitation; and

WHEREAS, The City of Riviera Beach Procurement Department competitively bid a contract for the rehabilitation of aerial crossings throughout the City; and

WHEREAS, four contractors bid on the project in which three were deemed responsive; and

WHEREAS, it was determined that Razorback, LLC was the lowest responsive bidder at $690,858.00; and

WHEREAS, the Board authorizes the Utility Special District Finance Director to make payments in an amount not to exceed $690,858.00 to Razorbakc, LLC. from account number 41231104-563000; and

WHEREAS, the City of Riviera Beach Utility Special District Executive Director shall have the authorization to approve up to a 10% change order; and,

WHEREAS, this Resolution shall take effect upon approval of the Utility Special District Board.

Now, Therefore, be it resolved by the City of Riviera Beach Utility Special District, Palm Beach County, Florida, as follows:

Section 1. That the Utility Special District Board authorizes the Utility Special District Finance Director to make payments to Razorback, LLC. from operating account 41231104-563000, in an amount not to exceed $690,858.00.

Section 2. The Executive Director of the Utility Special District, or designee, is authorized to execute all documents necessary to carry out the intent of this Resolution.

Section 3. This Resolution shall take effect immediately upon its passage and approval by the Board of Directors of the City of Riviera Beach Utility Special District.

Passed and Adopted this _____ day of _____, 2026.

APPROVED:

_____
Dr. Glen Spiritis
Chairperson

_____
Fercella Davis-Panier
Vice-Chairperson

ATTEST:

_____
Debrah Hall
Master Municipal Clerk
Acting District Clerk

MOTIONED BY: _____

SECONDED BY: _____

B. GUYTON: ____

K. MILLER-ANDERSON: ____

S. LANIER: ____

G. SPIRITIS: ____

F. DAVIS-PANIER: ____

Reviewed as to Legal Sufficiency

_____
Dawn S. Wynn, District Attorney

Date: _____

Procurement Department
Web: www.rivierabeach.org
Office: (561) 845-4180
Email: purchasing@rivierabeach.org

SOLICITATION RECOMMENDATION

TO: JOSHUA NIEMANN, UTILITY DIRECTOR

FROM: LATONYA AMMONS, M.A., CPPO, NIGP-CPP
PROCUREMENT DIRECTOR

DATE: SEPTEMBER 22, 2026

SUBJECT: RECOMMENDATION FOR AWARD: 26-018 – AERIAL PIPE CROSSING REHABILITATION

Background

At the request of the Utilities Department, the Procurement Department issued an Invitation to Bid (ITB) in accordance with Chapter 16.5 of the City of Riviera Beach ("City") Code of Ordinances. The ITB solicited a qualified and experienced vendor to provide construction services for the Aerial Pipe Crossings Rehabilitation for the Utilities Special District (USD).

The solicitation was advertised on the City's website and BidNet Direct on July 21, 2026 and closed on September 16, 2026.

The ITB was distributed to 1,060 vendors. By the bid due date of September 16, 2026, four (4) bids were received.

Following a compliance review, the bid was determined to be responsive:

Bidder	Bid Amount	Responsiveness	Rank
Shamrock Restoration Services, Inc.	$516,711.00	NON-RESPONSIVE	N/A
Razorback LLC	**$690,858.00**	**RESPONSIVE**	**1**
Hinterland Group, Inc.	$1,212,275.00	RESPONSIVE	2
Southern Star Contractors, Inc.	$1,274,440.00	RESPONSIVE	3

Recommendation

Based on the results of the solicitation and compliance review, the Procurement Department recommends award of solicitation 26-018 Aerial Pipe Crossings Rehabilitation to the lowest responsive and responsible bidder:

- Razorback LLC

Exhibits:
Exhibit "A" – Procurement Department Responsiveness Form
Exhibit "B" – Bid Summary

CITY OF RIVIERA BEACH
PROCUREMENT DEPARTMENT
BID TABULATION FORM

Solicitation No.: **ITB 26-018**

Solicitation Title: **Aerial Pipe Crossings Rehabilitation**

Bid Opening Date: **09/16/2026** **Bid Opening Time:** **2:03PM**

Procurement Representative: **LaTonya Ammons, Procurement Director**

NOTICE: This Bid Tabulation Form is provided solely as a record of bids received electronically in response to the above-referenced solicitation and the total bid amounts reflected in the submissions at the time of opening. The information shown is preliminary and subject to verification. This tabulation does not constitute a notice of award, recommendation, ranking, or determination of responsiveness or bidder responsibility. Any award recommendation or determination will be made separately in accordance with the solicitation, applicable City procurement requirements, and applicable law.

Vendor Name	Bid Amount
Hinterland Group, Inc.	$1,212,275.00
Razorback LLC	$690,858.00
Shamrock Restoration Services, Inc.	$516,711.00
Southern Star Contractors, Inc.	$1,274,440.00

Prepared By: Stacey Garced, Assistant Director Date: 09/17/2026

Reviewed By: Desai Sawyers, Buyer Date: 09/17/2026

City of Riviera Beach, Florida
Procurement Department
1481 West 15th Street
Riviera Beach, FL 33404
Web: www.rivierabeach.org
Office: (561) 845-4180
Email: purchasing@rivierabeach.org

October 21, 2026

Razorback LLC
Anthony Houllis, Managing Member
177 Anclote Road
Tarpon Springs, FL 34689
anthony@razorbackllc.com

Re: **Notice of Intent to Award – 26-018 Aerial Pipe Crossings Rehabilitation**

Dear Mr. Houllis:

The City of Riviera Beach is pleased to inform you of its intent to present a recommendation to the Utility Special District Board to award the above-referenced solicitation to your firm. The recommendation is scheduled for consideration at the Board's November 2026 meeting.

Please note that this Notice of Intent does not constitute an award of contract or authorization to begin work. Any award is subject to approval by the Utility Special District Board, execution of the Agreement by all required parties, and satisfaction of all other applicable City requirements.

To facilitate timely contract execution following Board approval, please review, sign, and return the enclosed Agreement no later than 5:00 p.m. (local time) on Tuesday, October 27, 2026.

In addition to the executed Agreement, please submit the following document by the deadline identified above:

- Certificate of Insurance demonstrating compliance with the insurance requirements specified in the solicitation.

Following Board approval and full execution of the Agreement, the following bonds must be submitted within ten (10) business days, each in an amount equal to one hundred ten percent (110%) of the total contract price:

1. Payment Bond
2. Performance Bond

Failure to timely submit the executed Agreement and all required documentation may delay the award and execution of the Agreement.

Lastly, to conduct business with the City, all awarded vendors must be registered in the City's Vendor Self-Service Portal and maintain an active business entity registration with the Florida Department of State, Division of Corporations (Sunbiz).

- If you are not currently registered in the City's Vendor Self-Service Portal, or your Sunbiz registration is not active, please complete or update your registration(s) at the following website(s):
    - City of Riviera Beach Vendor Self-Service Portal
        - https://rivierabeachflvendors.munisselfservice.com/Vendors/default.aspx
    - Florida Department of State, Division of Corporations (Sunbiz)
        - https://dos.fl.gov/sunbiz/
- If you are already registered, please log in to your account and verify that your company information is current and accurate. Please make any needed updates as soon as possible to avoid delays in processing payments once work begins and invoices are submitted.

If you have any questions regarding the Agreement or the required documentation, please contact me at your earliest convenience.

Thank you for your participation in the City's competitive procurement process. We appreciate your prompt attention to this matter and look forward to working with you following Board approval and execution of the Agreement.

Sincerely,

LaTonya Ammons, M.A., CPPO, NIGP-CPP

Digitally signed by LaTonya Ammons, M.A., CPPO, NIGP-CPP
Date: 2026.10.21 14:08:03 -04'00'

Director of Procurement
City of Riviera Beach
Procurement Department
lammons@rivierabeach.org
(561) 515-6484

Enclosure: Agreement for Signature

Cc: Joshua Niemann, Executive Director, Utility Special District
Richard Gallant, Assistant Utility Director, Utility Special District

CITY OF RIVIERA BEACH
CONTRACT FOR CONSTRUCTION

This Contract is made as of this _____ day of _____, 2025 by and between the CITY OF RIVIERA BEACH, a municipal corporation existing under the laws of the State of Florida, hereinafter referred to as the CITY, and Razorback LLC**.**, a corporation authorized to do business in the State of Florida, hereinafter referred to as the CONTRACTOR, whose Federal I.D. number is 26-3447303.

In consideration of the mutual promises contained herein, the CITY and the CONTRACTOR agree as follows:

ARTICLE 1 - SERVICES

The CONTRACTOR's responsibility under this Contract is to provide construction services for Aerial Pipe Crossings Rehabilitation, as more specifically set forth in the Scope of Work detailed in Exhibit "A", attached hereto and made a part hereof.

The CITY's representative/liaison during the performance of this Contract shall be Joshua Niemann telephone no. 561-845-4053, email address Jniemann@rivierabeach.org.

ARTICLE 2 - SCHEDULE

A. Time of Completion - Construction work must begin within ten (10) calendar days from the date of receipt of official notice to proceed; provided the CITY has received proof of insurance as set forth in Article 11 and a Performance and Payment Bond as set forth in Article 31 in a form satisfactory to the CITY. Construction work shall be carried on at a rate to ensure its full completion within Two Hundred Forty (240) calendar days from the date of official notice to proceed, the rate of progress and time of completion being essential conditions of this Contract.

B. Deduction for not completing on time - If the contract work is not substantially complete according to the terms of this Contract within the limits herein stipulated, the CONTRACTOR shall pay the CITY, not as a penalty, but as liquidated damages, a sum equal to one thousand dollars ($1000.00) for each day elapsing between the expiration of such time limit and the date of full completion, providing, however, that the time limits herein stated are subject to extension without payment of damages, as provided in Article 17, herein. It is agreed that these liquidated damages are a good faith and reasonable pre-estimate of CITY's actual damages due to delay by CONTRACTOR because it is difficult, if not impossible, to accurately estimate the actual damages suffered by CITY due to any such delay.

C. Reports - Reports and other items shall be delivered or completed in accordance with the detailed schedule set forth in Exhibit "A."

ARTICLE 3 - PAYMENTS TO CONTRACTOR

A. Generally - The CITY agrees to compensate the CONTRACTOR in accordance with the fee proposal set forth in Exhibit "B". The total and cumulative amount of this Contract shall not exceed Six Hundred Ninety Thousand Eight Hundred Fifty-Eight Dollars ($690,858.00). The CITY shall not reimburse the CONTRACTOR for any travel costs incurred as a direct result of the CONTRACTOR providing deliverables to the CITY in pursuance of the scope of work contained in Solicitation 26-018 Aerial Pipe Crossing, without specific, prior written approval of the CITY.

B. Progress Invoices - No later than the 20th day of every month, the CONTRACTOR shall prepare and submit, on a form approved by the CITY's representative, a detailed estimate and invoice of work which has been completed from the start of the job up to and including the last day of the preceding month, together with such supporting evidence of the expenditures as required by this Contract. The CONTRACTOR shall also submit with each invoice an updated revised work schedule. The CONTRACTOR shall include in the Progress Invoice a Warranty of Title indicating that as of the date of Progress Invoice that all work, materials, and equipment covered by the Progress Invoice passes to the City at the time of payment of the Progress Invoice and that all laborers, materialmen, and subcontractors have been paid in full for all work, materials, and equipment covered by the Progress Invoice and also provide Partial Releases of Lien and/or Partial Releases of Payment Bond from all laborers, materialmen, and subcontractors as to such work, materials, and equipment covered by the Progress Invoice. CITY has no obligation to pay any Progress Invoice until both a Warranty of Title and Partial Releases of Lien and/or Partial Releases of Payment Bond are provided to CITY.

C. Progress Payments – Progress Invoices received from the CONTRACTOR pursuant to this Contract will be reviewed and approved by the CITY representative within ten days of receipt of the invoice, indicating that services have been rendered in conformity with the Contract unless the CITY requires clarification or a correction of the invoice. The invoices will be sent to the Finance Department for payment. The CITY will pay to the CONTRACTOR ninety-five percent (95%) of the value based on the CONTRACTOR's estimate and invoice, as approved by the CITY representative. Invoices will normally be paid within thirty (30) days following the CITY representative's approval.

D. Payment of Expenses - All requests for payment of expenses eligible for reimbursement under the terms of this Contract, if any, shall include copies of said receipts, invoices, or other documentation acceptable to the Finance Department. Such documentation shall be sufficient to establish that the expense was actually incurred and necessary in the performance of the scope of work described in this Contract. Long distance telephone calls shall identify the person(s) called, purpose of call, time and costs. Mileage charges shall identify the destination, number of miles, rate, and purpose of travel. Duplication charges shall describe the documents, purpose of duplicating, and rate charged. Any travel, per diem, mileage, meals, or lodging expenses which may be reimbursable under the terms of this Contract, if any, will be paid in accordance with the rates and conditions set forth in Section 112.061, Florida Statutes.

E. Substantial Completion - When the CONTRACTOR considers the entire work ready for its intended use, the CONTRACTOR shall notify the CITY in writing and request that the CITY issue a certificate of

substantial completion. The CONTRACTOR shall at the same time submit to the CITY an initial draft of punch list items to be completed or corrected before final payment, including the estimated cost to complete each item on the list. Within 14 days after the CONTRACTOR's notification, the CITY will inspect the work to determine the status of completion. Within 14 days after the inspection:

i. If the CITY does not consider the work substantially complete, the CITY will notify the CONTRACTOR in writing giving the reasons therefor; or

ii. If the CITY considers the work substantially complete, the CITY will issue a certificate of substantial completion and attach to it a punch list of items to be completed or corrected before final payment, including the estimated cost to complete each item on the list.

After substantial completion, the CONTRACTOR shall promptly begin work on the punch list items to be completed or corrected prior to final payment. The CONTRACTOR will have at least 30 days to complete the punch list items and to achieve final completion. Within 20 business days after the CITY issues the certificate of substantial completion and punch list, the CITY will pay the CONTRACTOR the remaining contract balance, including all retainage previously withheld, less an amount equal to 150% of the estimated cost to complete the punch list items.

F. Final Inspection - Upon written notice from the CONTRACTOR that the entire work is complete, the CITY will promptly make a final inspection and will notify the CONTRACTOR in writing of all particulars in which this inspection reveals that the work is incomplete or defective. The CONTRACTOR shall immediately take such measures as are necessary to complete the work or remedy such deficiencies.

G. Final Invoice - After the CONTRACTOR has satisfactorily completed all corrections identified during the final inspection and has delivered all documents required by the Contract, the CONTRACTOR may make application for final payment. In order for both parties herein to close their books and records, the CONTRACTOR will clearly state "Final Invoice" on the CONTRACTOR's final/last billing to the CITY. This certifies that all services have been properly performed and all charges and costs have been invoiced to the CITY. Since this account will thereupon be closed, any and other further charges if not properly included on this Final Invoice are waived by the CONTRACTOR and the CITY shall have no obligations for any other costs or expenses thereafter. Further, the CONTRACTOR shall include in the Final Invoice a Warranty of Title indicating that that all work, materials, and equipment covered by this Contract passes to the City at the time of payment of the Final Invoice and that all laborers, materialmen, and subcontractors have been paid in full for all work, materials, and equipment covered by this Contract and also provide Final Releases of Lien and/or Final Releases of Payment Bond from all laborers, materialmen, and subcontractors as to such work, materials, and equipment covered by the Contract. CITY has no obligation to pay the Final Invoice until both a Warranty of Title and Final Releases of Lien and/or Final Release of Payment Bond are provided to CITY.

ARTICLE 4 - TRUTH-IN-NEGOTIATION CERTIFICATE

Signature of this Contract by the CONTRACTOR shall also act as the execution of a truth-in-negotiation certificate certifying that the wage rates, over-head charges, and other costs used to determine the compensation

provided for in this Contract are accurate, complete and current as of the date of the Contract and no higher than those charged to the CONTRACTOR'S most favored customer for the same or substantially similar service.

The said rates and costs shall be adjusted to exclude any significant sums should the CITY determine that the rates and costs were increased due to inaccurate, incomplete or non current wage rates or due to inaccurate representations of fees paid to outside contractors. The CITY shall exercise its rights under this Article 4 within three (3) years following final payment.

ARTICLE 5 - TERMINATION

This Contract may be canceled by the CONTRACTOR upon thirty (30) days prior written notice to the CITY'S representative in the event of substantial failure by the CITY to perform in accordance with the terms of this Contract through no fault of the CONTRACTOR; provided the CITY fails to cure same within that thirty (30) day period. This Contract may also be terminated, in whole or in part, by the CITY, with or without cause, immediately upon written notice to the CONTRACTOR. Unless the CONTRACTOR is in breach of this Contract, the CONTRACTOR shall be paid for services rendered to the CITY'S satisfaction through the date of termination. After receipt of a Termination Notice and except as otherwise directed by the CITY, the CONTRACTOR shall:

A. Stop work on the date and to the extent specified.

B. Terminate and settle all orders and subcontracts relating to the performance of the terminated work.

C. Transfer all work in process, completed work, and other materials related to the terminated work to the CITY.

D. Continue and complete all parts of the work that have not been terminated.

ARTICLE 6 - PERSONNEL

The CONTRACTOR represents that it has, or will secure at its own expense, all necessary personnel required to perform the services under this Contract. Such personnel shall not be employees of or have any contractual relationship with the CITY.

All of the services required hereunder shall be performed by the CONTRACTOR or under its supervision, and all personnel engaged in performing the services shall be fully qualified and licensed and, if required, authorized or permitted under state and local law to perform such services.

Any changes or substitutions in the CONTRACTOR's key personnel, as may be listed in Exhibit "A", must be made known to the CITY's representative and written approval, at CITY’s sole discretion, must be granted by the CITY's representative before said change or substitution can become effective.

The CONTRACTOR warrants that all services shall be performed by skilled, properly licensed, and competent personnel to the highest professional standards in their respective field(s).

The CONTRACTOR agrees that it is fully responsible to the CITY for the acts and omissions of subcontractors and of persons either directly or indirectly employed by the CONTRACTOR. Nothing contained herein shall create any contractual relationship between any subcontractor and the CITY.

All of the CONTRACTOR's personnel (and all Subcontractors) while on CITY premises will comply with all CITY requirements governing conduct, safety and security.

ARTICLE 7 - SUBCONTRACTING

The CITY reserves, at its sole discretion and for any reason, the right to accept the use of a subcontractor or to reject the selection of a particular subcontractor by CONTRACTOR and to inspect all facilities and approve all qualifications of any subcontractor in order to make a determination as to the capability of the subcontractor to perform properly under this Contract. However, in any event the CONTRACTOR shall be responsible for performing 50% of the work, at a minimum, by its own forces and equipment. Any changes or substitutions in the CONTRACTOR's subcontractors must be made known to the CITY's representative and written approval must be granted by the CITY's representative before said change or substitution can become effective. The CONTRACTOR is encouraged to seek minority and women business enterprises for participation in subcontracting opportunities. Further,

If a subcontractor fails to perform or make progress, as required by this Contract, and it is necessary to replace the subcontractor to complete the work in a timely fashion, the CONTRACTOR shall promptly do so, subject to acceptance, in writing and at the CITY's sole discretion, of the new subcontractor by the CITY. The CITY shall not unreasonably deny the request. However, the CONTRACTOR must demonstrate that the subcontractor being replaced is unable to perform the work, is performing the work poorly or untimely, or is unable to meet the requirements of the contract with the CITY. The CITY will not address issues related to the CONTRACTOR's specific agreement with the subcontractor including issues of pricing.

If subcontractor(s) are used, the CONTRACTOR shall use only licensed and insured subcontractor(s), and shall require any subcontractor, as may be applicable, to provide a payment and performance bond. All subcontractors shall be required to promptly make payments to any person who, directly or indirectly, provides services or supplies under this Contract.

The CONTRACTOR shall be responsible for the performance of all subcontractors.

ARTICLE 8 – SBE PARTICIPATION

Consistent with the City's procurement code, Small Business Enterprises (SBE) shall have the opportunity to participate in this project. CONTRACTOR is hereby informed that the CITY has established a goal of 15% participation of SBE. Contractor is obligated to demonstrate and document a good faith effort toward the attainment of the 15% SBE participation as a condition of this contract. The CONTRACTOR agrees to maintain all relevant records and information necessary to document compliance with the Ordinance, and agrees to allow the CITY to inspect such records and provide such records to the CITY upon request.

ARTICLE 9 - FEDERAL AND STATE TAX

The CITY is exempt from payment of Florida State Sales and Use Taxes. The CITY will sign an exemption certificate submitted by the CONTRACTOR. The CONTRACTOR shall not be exempted from paying sales tax to its suppliers for materials used to fulfill contractual obligations with the CITY, nor is the CONTRACTOR authorized to use the CITY'S Tax Exemption Number in securing such materials.

The CONTRACTOR shall be responsible for payment of its own and its share of its employees' payroll, payroll taxes, and benefits with respect to this Contract.

ARTICLE 10 - AVAILABILITY OF FUNDS

The CITY's performance and obligation to pay under this Contract is contingent upon an annual appropriation for its purpose by the CITY OF RIVIERA BEACH CITY COUNCIL.

ARTICLE 11 - INSURANCE

A. Prior to execution of this Contract by the CITY, the CONTRACTOR shall provide certificates evidencing insurance coverages as required hereunder. All insurance policies shall be issued by companies authorized to do business under the laws of the State of Florida. The Certificates shall clearly indicate that the CONTRACTOR has obtained insurance of the type, amount, and classification as required for strict compliance with this ARTICLE and that no material change or cancellation of the insurance shall be effective without thirty (30) days prior written notice to the CITY's representative. Compliance with the foregoing requirements shall not relieve the CONTRACTOR of its liability and obligations under this Contract.

B. The CONTRACTOR shall maintain during the term of this Contract, standard Professional Liability Insurance in the minimum amount of $1,000,000.00 per occurrence (if applicable).

C. The CONTRACTOR shall maintain, during the life of this Contract, commercial general liability, including contractual liability, insurance in the amount of $1,000,000.00 per occurrence and $2,000,000 annual aggregate to protect the CONTRACTOR from claims for damages for bodily and personal injury, including wrongful death, as well as from claims of property damages which may arise from any operations under this Contract, whether such operations be by the CONTRACTOR or by anyone, directly or indirectly, employed by or contracting with the CONTRACTOR.

D. The CONTRACTOR shall maintain, during the life of this Contract, comprehensive automobile liability insurance in the minimum amount of $1,000,000.00 combined single limit for bodily injury and property damages liability to protect the CONTRACTOR from claims for damages for bodily and personal injury, including death, as well as from claims for property damage, which may arise from the ownership, use, or maintenance of owned and non-owned automobiles including, but not limited to, leased and rented

automobiles, whether such operations be by the CONTRACTOR or by anyone, directly or indirectly, employed by the CONTRACTOR.

E. The parties to this Contract shall carry Workers' Compensation Insurance and Employer's Liability Insurance for all employees as required by Florida Statutes. In the event that a party does not carry Workers' Compensation Insurance and chooses not to obtain same, then such party shall, in accordance with Section 440.05, Florida Statutes, apply for and obtain an exemption authorized by the Department of Insurance and shall provide a copy of such exemption to the CITY.

F. All insurance, other than Professional Liability and Workers' Compensation, to be maintained by the CONTRACTOR shall specifically include the CITY as an "Additional Insured." Further, if CITY is being reimbursed in whole or in part for the cost of the work contemplated by the Contract by any third party, including but not limited to, any County, State, or Federal agency, CONTRACTOR, at CITY's request, will also list any such third party as an "Additional Insured" on all insurance.

ARTICLE 12 - INDEMNIFICATION

To the extent allowed by law, including section 725.06(2), Florida Statutes, the CONTRACTOR shall indemnify and hold harmless the CITY, its agents, officers, and employees from and against any and all claims, liability, losses, and/or causes of action which may arise from any negligent act, recklessness, or intentional wrongful conduct or omission of the CONTRACTOR, its agents, officers, or employees in the performance of services under this Contract, including, but not limited to, to all attorneys' fees and costs incurred by CITY.

The CONTRACTOR further agrees to indemnify and hold harmless the CITY, its agents, officers and employees from and against any claim, demand or cause of action of whatsoever kind or nature arising out of any conduct or misconduct of the CONTRACTOR not included in the paragraph above and for which the CITY, its agents, officers, or employees are alleged to be liable, including, but not limited to, to all attorneys' fees and costs incurred by CITY.

CONTRACTOR shall pay all claims, losses, liens, fines, settlements or judgments of any nature whatsoever in connection with the foregoing indemnifications including, but not limited to, all costs, expert witness fees, reasonable attorney's fees, and court and/or arbitration costs. These indemnifications shall survive the term of this Contract or any renewal thereof.

Nothing contained in this Article shall be construed or interpreted as consent by the CITY to be sued, nor as a waiver of sovereign immunity beyond the waiver provided in Section 768.28, Florida Statutes.

ARTICLE l3 - SUCCESSORS AND ASSIGNS

The CITY and the CONTRACTOR each binds itself and its partners, successors, executors, administrators and assigns to the other party of this Contract and to the partners, successors, executors, administrators and assigns of such other party, in respect to all covenants of this Contract. Neither the CITY nor the CONTRACTOR shall assign, sublet, convey or transfer its interest in this Contract without the written consent of the other. Nothing herein shall be construed as creating any personal liability on the part of any officer or agent of the CITY which

may be a party hereto, nor shall it be construed as giving any rights or benefits hereunder to anyone other than the CITY and the CONTRACTOR.

ARTICLE 14 – DISPUTE RESOLUTION, VENUE, AND REMEDIES

All claims arising out of this Contract or its breach shall be submitted first to mediation in accordance with the local rules for mediation in Palm Beach County, Florida. The parties shall share the mediator's fee equally. The mediation shall be held in Palm Beach County, unless another location is mutually agreed upon. Agreements reached in mediation shall be enforceable as settlement agreements in any court having jurisdiction thereof.

This Contract shall be governed by the laws of the State of Florida. Any and all legal action necessary to enforce the Contract will be held in Palm Beach County, Florida. No remedy herein conferred upon any party is intended to be exclusive of any other remedy, and each and every such remedy shall be cumulative and shall be in addition to every other remedy given hereunder or now or hereafter existing at law or in equity or by statute or otherwise. No single or partial exercise by any party of any right, power, or remedy hereunder shall preclude any other or further exercise thereof.

ARTICLE 15-REMEDIES

No remedy herein conferred upon any party is intended to be exclusive of any other remedy, and each and every such remedy shall be cumulative and shall be in addition to every other remedy given hereunder or now or hereafter existing at law or in equity or by statute or otherwise. No single or partial exercise by any party of any right, power, or remedy hereunder shall preclude any other or further exercise thereof.

ARTICLE l6 - CONFLICT OF INTEREST

The CONTRACTOR represents that it presently has no interest and shall acquire no interest, either direct or indirect, which would conflict in any manner with the performance or services required hereunder, as provided for in Florida Statutes, Section 112.311. The CONTRACTOR further represents that no person having any such conflicting interest shall be employed for said performance.

The CONTRACTOR shall promptly notify the CITY's representative, in writing, by certified mail, of all potential conflicts of interest for any prospective business association, interest or other circumstance which may influence or appear to influence the CONTRACTOR's judgment or quality of services being provided hereunder. Such written notification shall identify the prospective business association, interest or circumstance, the nature of work that the CONTRACTOR may undertake and request an opinion of the CITY as to whether the association, interest or circumstance would, in the opinion of the CITY, constitute a conflict of interest if entered into by the CONTRACTOR. The CITY agrees to notify the CONTRACTOR of its opinion by certified mail within thirty (30) days of receipt of notification by the CONTRACTOR. If, in the opinion of the CITY, the prospective business association, interest or circumstance would not constitute a conflict of interest by the CONTRACTOR, the CITY shall so state in the notification and the CONTRACTOR shall, at its option, enter into said association, interest or circumstance and it shall be deemed not in conflict of interest with respect to services provided to the CITY by the CONTRACTOR under the terms of this Contract.

ARTICLE 17 – DELAYS AND EXTENSION OF TIME

The CONTRACTOR shall not be considered in default by reason of a delay in timely performance if such delay and failure arises out of causes reasonably beyond the control of the CONTRACTOR or its subcontractors and without their fault or negligence. Such causes include, but are not limited to: acts of God; natural or public health emergencies; labor disputes; freight embargoes; and abnormally severe and unusual weather conditions. Upon the CONTRACTOR's request, the CITY shall consider the facts and extent of any such delay and failure to timely perform the work for reason beyond the control of the CONTRACTOR and, if the CONTRACTOR's delay and failure to timely perform was without it or its subcontractors' fault or negligence, as determined by the CITY in its sole discretion, the time of completion shall be extended for any reasonable time that the CITY, in its sole discretion, may decide; subject to the CITY's rights to change, terminate, or stop any or all of the work at any time.

If the CONTRACTOR is delayed at any time in the progress of the work by any act or neglect of the CITY or its employees, or by any other contractor employed by the CITY, or by changes ordered by the CITY or in an unusual delay in transportation, unavoidable casualties, or any causes beyond the CONTRACTOR'S control, or by delay authorized by the CITY pending negotiation or by any cause which the CITY, in its sole discretion, shall decide justifies the delay, then the time of completion shall be extended for any reasonable time the CITY, in its sole discretion, may decide.

No extension of time shall be made for any delay occurring more than seven (7) days before a claim therefore is made in writing to the CITY. In the case of continuing cause of delay, only one (1) claim is necessary.

If no schedule or other agreement sets forth the dates by which drawing(s) shall be furnished, then no claims for delay shall be allowed because of failure to furnish such drawing(s), until two (2) weeks after demand for the drawings and not then unless said claim is reasonable.

The CONTRACTOR's sole remedy for a delay in completion of the work for any reason will be an extension of time to complete the work and CONTRACTOR specifically waives any right to seek any monetary damages or losses for a delay in completion of the work, including, but not limited to, waiving any right to seek monetary amounts for lost profits, additional overhead, salaries, lost productivity, efficiency losses, or any other alleged monetary losses which may be allegedly suffered by CONTRACTOR due to a delay in completion of the work.

ARTICLE 18 - INDEBTEDNESS

The CONTRACTOR shall not pledge the CITY's credit or make it a guarantor of payment or surety for any contract, debt, obligation, judgment, lien, or any form of indebtedness. The CONTRACTOR further warrants and represents that it has no obligation or indebtedness that would impair its ability to fulfill the terms of this Contract.

ARTICLE 19 - DISCLOSURE AND OWNERSHIP OF DOCUMENTS

The CONTRACTOR shall deliver to the CITY's representative for approval and acceptance, and before being eligible for final payment of any amounts due, all documents and materials prepared by and for the CITY under this Contract.

All written and oral information not in the public domain or not previously known, and all information and data obtained, developed, or supplied by the CITY or at its expense will be kept confidential by the CONTRACTOR and will not be disclosed to any other party, directly or indirectly, without the CITY's prior written consent unless required by a lawful order. All drawings, maps, sketches, programs, data base, reports and other data developed, or purchased, under this Contract for or at the CITY's expense shall be and remain the CITY's property and may be reproduced and reused at the discretion of the CITY.

The CONTRACTOR shall comply with Florida's Public Records Act, Chapter 119, Florida Statutes, and, if determined to be acting on behalf of the CITY as provided under section 119.011(2), Florida Statutes, specifically agrees to:

(a) Keep and maintain public records required by the CITY to perform the service.

(b) Upon request from the CITY's custodian of public records or designee, provide the CITY with a copy of the requested records or allow the records to be inspected or copied within a reasonable time at a cost that does not exceed the cost provided in Chapter 119, Florida Statutes, or as otherwise provided by law.

(c) Ensure that public records that are exempt or confidential and exempt from public records disclosure requirements are not disclosed except as authorized by law for the duration of this Contract and following completion of this Contract if the CONTRACTOR does not transfer the records to the CITY.

(d) Upon completion of this Contract, transfer, at no cost, to the CITY all public records in possession of the CONTRACTOR or keep and maintain public records required by the CITY to perform the service. If the CONTRACTOR transfers all public records to the CITY upon completion of the Contract, the CONTRACTOR shall destroy any duplicate public records that are exempt or confidential and exempt from public records disclosure requirements. If the CONTRACTOR keeps and maintains public records upon completion of the Contract, the CONTRACTOR shall meet all applicable requirements for retaining public records. All records stored electronically must be provided to the CITY, upon request from the CITY's custodian of public records or designee, in a format that is compatible with the information technology systems of the CITY.

IF THE CONTRACTOR HAS QUESTIONS REGARDING THE APPLICATION OF CHAPTER 119, FLORIDA STATUTES, TO THE CONTRACTOR'S DUTY TO PROVIDE PUBLIC RECORDS RELATING TO THIS CONTRACT, CONTACT THE CUSTODIAN OF PUBLIC RECORDS AT THE CITY CLERK'S OFFICE, CITY OF RIVIERA BEACH, 600 WEST BLUE HERON BLVD., RIVIERA BEACH, FL. 33404, BY EMAIL AT CITYCLERK@RIVIERABEACH.ORG OR BY TELEPHONE 561-845-4090.

ARTICLE 20 - INDEPENDENT CONTRACTOR RELATIONSHIP

The CONTRACTOR is, and shall be, in the performance of all work, services and activities under this Contract, an Independent Contractor, and not an employee, agent, or servant of the CITY. All persons engaged in any of the work or services performed pursuant to this Contract shall at all times, and in all places, be subject to the CONTRACTOR's sole direction, supervision, and control. The CONTRACTOR shall exercise control over the means and manner in which it and its employees perform the work, and in all respects the CONTRACTOR's relationship and the relationship of its employees to the CITY shall be that of an Independent Contractor and not as employees or agents of the CITY.

The CONTRACTOR does not have the power or authority to bind the CITY in any promise, agreement or representation other than as specifically provided for in this Contract.

ARTICLE 21 - CONTINGENT FEES

The CONTRACTOR warrants that it has not employed or retained any company or person, other than a bona fide employee working solely for the CONTRACTOR to solicit or secure this Contract and that it has not paid or agreed to pay any person, company, corporation, individual, or firm, other than a bona fide employee working solely for the CONTRACTOR, any fee, commission, percentage, gift, or any other consideration contingent upon or resulting from the award or making of this Contract.

ARTICLE 22 - ACCESS AND AUDITS

The CONTRACTOR shall maintain adequate records to justify all charges, expenses, and costs incurred in estimating and performing the work for at least three (3) years after completion of this Contract. The CITY shall have access to such books, records, and documents as required in this Article for the purpose of inspection or audit during normal business hours, at the CONTRACTOR's place of business.

ARTICLE 23 - NONDISCRIMINATION

The CONTRACTOR warrants and represents that all of its employees are treated equally during employment without regard to race, color, religion, disability, sex, age, national origin, ancestry, political affiliation, marital status, handicap, or sexual orientation. Further, CONTRACTOR shall not discriminate or permit discrimination against any employee or an applicant for employment on the basis of race, color, sex, religion, political affiliation, natural origin, ancestry, marital status, sexual orientation or handicap.

ARTICLE 24 - ENFORCEMENT COSTS

All parties shall be responsible for their own attorneys fees, court costs and expenses if any legal action or other proceeding is brought for any dispute, disagreement, or issue of construction or interpretation arising hereunder whether relating to the Contract's execution, validity, the obligations provided therein, or performance of this

Contract, or because of an alleged breach, default or misrepresentation in connection with any provisions of this Contract.

ARTICLE 25 – LICENSES, APPROVALS AND PERMITS

The CONTRACTOR hereby represents and warrants that it has and will continue to maintain all licenses and approvals required to conduct its business, and that it will at all times conduct its business activities in a reputable manner. This includes, but is not limited to, maintaining all licenses and performing all the duties required under Section 489.128, Florida Statutes. Proof of such licenses and approvals shall be submitted to the CITY's representative upon request.

The CONTRACTOR shall be solely responsible for obtaining, paying for, and complying with all necessary permits, licenses, approvals and authorizations required for any work done pursuant to this Contract from any federal, state, regional, county or city agency.

ARTICLE 26 - SEVERABILITY

If any term or provision of this Contract, or the application thereof to any person or circumstances shall, to any extent, be held invalid or unenforceable, the remainder of this Contract, or the application of such terms or provisions, to persons or circumstances other than those as to which it is held invalid or unenforceable, shall not be affected, and every other term and provision of this Contract shall be deemed valid and enforceable to the extent permitted by law.

ARTICLE 27 - PUBLIC ENTITY CRIMES

As provided in Sections 287.132-133, Florida Statutes, by entering into this Contract or performing any work in furtherance hereof, the CONTRACTOR certifies that it, its affiliates, suppliers, subcontractors and contractors who will perform hereunder, have not been placed on the convicted vendor list maintained by the State of Florida Department of Management Services within the 36 months immediately preceding the date hereof. This notice is required by F.S. 287.133(3)(a).

ARTICLE 28 - MODIFICATIONS OF WORK

The CITY reserves the right to make changes in the Scope of Work, including alterations, reductions therein or additions thereto. Upon receipt by the CONTRACTOR of the CITY's notification of a contemplated change, the CONTRACTOR shall, in writing: (1) provide a detailed estimate for the increase or decrease in cost due to the contemplated change; (2) notify the CITY of any estimated change in the completion date; and, (3) advise the CITY if the contemplated change shall affect the CONTRACTOR's ability to meet the completion dates or schedules of this Contract.

If the CITY so instructs in writing, the CONTRACTOR shall suspend work on that portion of the Scope of Work affected by a contemplated change, pending the CITY's decision to proceed with the change.

If the CITY elects to make the change, the CITY shall initiate a Contract Amendment and the CONTRACTOR shall not commence work on any such change until such written amendment is signed by the CONTRACTOR and approved and executed by the CITY's designated representative and approved by the CITY COUNCIL FOR THE CITY OF RIVIERA BEACH should said change require COUNCIL approval.

ARTICLE 29 - NOTICE

All notices required in this Contract shall be sent by certified mail, return receipt requested, and if sent to the CITY shall be mailed to:

JOSHUA NIEMANN, EXECUTIVE DIRECTOR
UTILITY SPECIAL DISTRICT
1481 15TH STREET
RIVIERA BEACH, FL 33404
JNIEMANN@RIVIERABEACH.ORG

and if sent to the CONTRACTOR shall be mailed to:

ANTHONY HOULLIS
177 ANCLOTE ROAD
TARPON SPRINGS FLORIDA 34689
ANTHONY@RAZORBACKLLC.COM

ARTICLE 30 - ENTIRETY OF CONTRACTUAL AGREEMENT

The CITY and the CONTRACTOR agree that this Contract and any attachments hereto or other documents as referenced in the Contract sets forth the entire agreement between the parties, that there are no promises or understandings other than those stated herein, and this Contract supersedes all prior oral and written agreements between the parties hereto with respect to the subject matter hereof. None of the provisions, terms and conditions contained in this Contract may be added to, modified, superseded or otherwise altered, except by written instrument executed by the parties hereto in accordance with Article 28 - Modifications of Work.

ARTICLE 31 - SPECIAL CONDITIONS

All materials and supplies provided by CONTRACTOR shall be in strict accordance with the plans and specifications approved by the CITY.

The CONTRACTOR shall furnish bonds and maintain said bonds throughout the duration of the project as provided for in Florida Statutes section 255.01 Et. Seq., covering the faithful performance of the Contract and payment of all obligations arising thereunder. The bonds shall be secured by the CONTRACTOR from a surety company licensed in the State of Florida with an "A-" rating or better in management and a "10" rating or better

in strength as rated by Best's Key Rating Guide published by Alfred M. Best Company, Oldwick, New Jersey 08858.

The CONTRACTOR shall be required to provide Surety Bonds in the amount of one hundred percent (100%) of the Contract amount. The required premiums shall be paid for by the CONTRACTOR.

In addition to the above-minimum qualifications, the surety company must meet at least one of the following additional qualifications:

A. The surety company shall hold a current certificate or authority as an acceptable surety of federal bonds in accordance with the United States Department of Treasury Circular 570, Current Revision. The surety company shall provide the CITY with satisfactory evidence that such excess risk has been protected in an acceptable manner.

B. The surety company shall have at least the following minimum ratings in the latest revision of Best's Key Rating Guide: Best's Policy Holders Ratings –A- (minimum); Best Financial Category – Class 1.

C. For projects that do not exceed $500,000, the CITY will accept bonds in accordance with section 287.0935, Florida Statutes.
D. If the surety is declared bankrupt, becomes insolvent, its right to do business in the State of Florida is terminated or it ceases to meet the requirements set forth above, the CONTRACTOR shall within ten (10) working days after notification by the CITY substitute another bond and surety company, at no cost to the CITY, meeting the above requirements.

ARTICLE 32 – INSPECTION OF WORK

The CITY's representative and the CITY's Engineer shall at all times have access to work wherever it is, in preparation or progress, and the CONTRACTOR shall provide proper facilities for such access and for inspection.

If the specifications, the CITY, the Engineer's instructions, laws, ordinances or any public authority requires any work to be specially tested or approved, the CONTRACTOR shall give the CITY Representative and CITY Engineer timely notice of its readiness for inspection. If any such work should be covered up by CONTRACTOR and CITY Representative or CITY Engineer desires to inspect or re-inspect such work for any reason, at the sole discretion of CITY Representative or CITY Engineer, such work must be uncovered for examination, at the CONTRACTOR's expense.

ARTICLE 33– WARRANTY/GUARANTY

All materials and equipment to be furnished and/or installed by the CONTRACTOR under this Contract as it relates to the Aerial Pipe Crossings Rehabilitation shall be guaranteed by the Manufacturer, if any, for a period of years as specified by the manufacturer under normal manufacturer warranties from the date of final acceptance thereof against defective materials, design and workmanship. The CONTRACTOR shall guarantee all of its work, including but not limited to all work related to construction of the Aerial Pipe Crossings Rehabilitation and all related amenities for a period of 1 year. Upon receipt of notice from the CITY of failure of any part covered

under such warranty/guaranty period, the affected part, parts, or materials shall be replaced promptly with new parts or materials by the CONTRACTOR or Manufacturer at no expense to the CITY. In the event the CONTRACTOR fails to make the necessary repairs or replacements within thirty (30) days after notification by the CITY, the CITY may accomplish the work at the expense of the CONTRACTOR.

The CONTRACTOR shall provide the CITY with a written warranty of its work and with a copy of the manufacturer's warranty as it relates to the materials and parts used to Aerial Pipe Crossings Rehabilitation.

ARTICLE 34 – PROTECTION OF WORK AND PROPERTY

The CONTRACTOR shall continuously maintain adequate protection of all work from damage, and shall protect such work and the CITY's property from injury or loss arising during the term of the Contract. Except for any such damage, injury, or loss which may be directly due to errors caused by the CITY or employees of the CITY, the CONTRACTOR shall adequately protect adjacent property, as provided by the law, and shall provide guard fences, lights, and any other necessary materials to carry out such protection.

Until acceptance of the work by the CITY, the CITY's property shall be under the charge and care of the CONTRACTOR and the CONTRACTOR shall take every necessary precaution against injury or damage to the work by the action of the elements or from any other cause whatsoever, and the CONTRACTOR shall repair, restore and make good, without additional charge any work occasioned by any of the above causes before its completion and acceptance by the CITY.

ARTICLE 35 – TIME

The parties agree that time is of the essence in all respects under this Contract and failure by a party to complete performance within the time specified, or within a reasonable time if no time is specified herein or in the exhibits, shall, at the option of the other party without liability, in addition to any other rights or remedies, relieve the other party of any obligation to accept such performance.

ARTICLE 36 - TERMINOLOGY AND CAPTIONS

All pronouns, singular, plural, masculine, feminine or neuter, shall mean and include the person, entity, firm or corporation to which they relate as the context may require. Wherever the context may require, the singular shall mean and include the plural and the plural shall mean and include the singular. The term "Contract" as used herein, as well as the terms "herein", "hereof", "hereunder", "hereinafter" and the like mean this Contract in its entirety and all exhibits, amendments and addenda attached hereto and made a part hereof. The captions and paragraph headings are for reference and convenience only and do not enter into or become a part of the context of this Contract, nor shall such headings affect the meaning or interpretation of this Contract.

ARTICLE 37 - WAIVER

Failure of the CITY to enforce or exercise any right(s) under this Contract shall not be deemed a waiver of the CITY's right to enforce or exercise said right(s) at any time thereafter.

ARTICLE 38 - PREPARATION

CITY and CONTRACTOR acknowledge that each has had the benefit of counsel or the ability to retain counsel and full and free access to counsel in connection with the negotiation and execution of Contract, that each has consulted or could have consulted with counsel in connection with this Contract, and that each has had the opportunity, prior to execution, to read this Contract and fully understand all of its provisions. Should any provision in this Contract require judicial or quasi-judicial interpretation it is agreed that a Court or other dispute resolution forum interpreting or enforcing the same shall not apply a presumption that the terms hereof shall be more strictly construed against any party by reason of the rule construction that a document is to be construed more strictly against the party who itself or through its agent has prepared the same. CITY and CONTRACTOR agree that this Contract is the product and result of a joint effort.

ARTICLE 39 - MATERIALITY

All provisions of the Contract shall be deemed material. In the event CONTRACTOR fails to comply with any of the provisions contained in this Contract or exhibits, amendments and addenda attached hereto, said failure shall be deemed a material breach of this Contract and CITY may at its option and without notice terminate this Contract.

ARTICLE 40 - REPRESENTATIONS/BINDING AUTHORITY

CONTRACTOR has full power, authority and legal right to execute and deliver this Contract and perform all of its obligations under this Contract. By signing this Contract, Anthony Houllis, hereby represents to the CITY that he/she has the authority and full legal power to execute this Contract and any and all documents necessary to effectuate and implement the terms of this Contract on behalf of the party for whom he or she is signing and to bind and obligate such party with respect to all provisions contained in this Contract.

ARTICLE 41 - EXHIBITS

Each exhibit referred to in this Contract forms an essential part of this Contract. The exhibits, if not physically attached, should be treated as part of this Contract and are incorporated herein by reference.

ARTICLE 42 - CONTRACT DOCUMENTS AND CONTROLLING PROVISIONS

This Contract consists of this contract, bid documents and construction design plans. The CONTRACTOR agrees to be bound by all the terms and conditions set forth in this Contract and design plans. To the extent that there exists a conflict between this Contract and design plans, the terms, conditions, covenants, and/or provisions of this Contract shall prevail. Wherever possible, the provisions of such documents shall be construed in such a manner as to avoid conflicts between provisions of the various documents.

ARTICLE 43 - LEGAL EFFECT

This Contract shall not become binding and effective until approved, in writing, by both CITY's designated representative and the CITY COUNCIL OF THE CITY OF RIVIERA BEACH.

ARTICLE 44 - NOTICE OF COMPLAINTS OR SUITS

Each party will promptly notify the other of any complaint, claim, suit or cause of action threatened or commenced against it which arises out of or relates, in any manner, to the performance of this Contract. Each party agrees to cooperate with the other in any investigation either may conduct, the defense of any claim or suit in which either party is named, and shall do nothing to impair or invalidate any applicable insurance coverage.

ARTICLE 45 – SURVIVABILITY

Any provision of this Contract which is of a continuing nature or imposes an obligation which extends beyond the term of this Contract shall survive its expiration or earlier termination.

ARTICLE 46 - DEFAULT

Notwithstanding anything contained in this Contract to the contrary, the parties agree that, by way of inclusion and not limitation, the occurrence of any of the following shall be deemed a material event of default and shall be grounds for termination:

A. The filing of a lien or claim of any kind by any subcontractor or third tier subcontractor including, but not limited to materialmen, suppliers, or laborers, upon any property, right of way, easement, other interest in land or right to use such land within the territorial boundaries of the CITY which lien is not satisfied, discharged or contested in a court of law within thirty (30) days from the date of notice to the CONTRACTOR;

B. The filing of any claim, including, but not limited to, a claim against any Payment Bond by any subcontractor or third tier subcontractor including, but not limited to materialmen, suppliers, or laborers, concerning the failure of the CONTRACTOR to pay any such subcontractor or third tier subcontractor including, but not limited to materialmen, suppliers, or laborers, for any work performed or materials supplied pursuant to this Contract;

C. The filing of any judgment lien against the assets of CONTRACTOR related to the performance of this Contract which is not satisfied, discharged or contested in a court of law within thirty (30) days from the date of notice to the CONTRACTOR; or

D. The filing of a petition by or against the CONTRACTOR for relief under the Bankruptcy Code, or for its reorganization or for the appointment of a receiver or trustee of the CONTRACTOR or the CONTRACTOR’s property; or an assignment by CONTRACTOR for the benefit of creditors; or the taking possession of the property of the CONTRACTOR by any governmental officer or agency pursuant to statutory authority for the dissolution or liquidation of the CONTRACTOR; or if a temporary or permanent receiver or trustee shall be appointed for the CONTRACTOR or for the CONTRACTOR’s property and such temporary or permanent receiver or Trustee shall not be

discharged within thirty (30) days from the date of appointment.

The CONTRACTOR shall provide written notice to the CITY of the occurrence of any event of default within ten (10) days of CONTRACTOR's notice of any such default.

ARTICLE 47 - WAIVER OF SUBROGATION

CONTRACTOR hereby waives any and all rights to Subrogation against the CITY, its officers, employees and agents for each required policy. When required by the insurer, or should a policy condition not permit an insured to enter into a pre-loss agreement to waive subrogation without an endorsement, then the CONTRACTOR shall agree to notify the insurer and request the policy be endorsed with a Waiver of Transfer of Rights of Recovery Against Others, or its equivalent. This Waiver of Subrogation requirement shall not apply to any policy, which a condition to the policy specifically prohibits such an endorsement, or voids coverage should the CONTRACTOR enter into such an agreement on a pre-loss basis.

ARTICLE 48 - RIGHT TO REVIEW

The CITY, by and through its Risk Management Department, in cooperation with the contracting/monitoring department, reserves the right to review, reject or accept any required policies of insurance, including limits, coverages, or endorsements, therein from time to time throughout the term of this Contract. The CITY reserves the right, but not the obligation, to review and reject any insurer providing coverage because of poor financial condition or failure to operate legally.

ARTICLE 49 – SUBRECIPENT REQUIREMENTS

CONTRACTOR agrees and recognizes that CITY may be seeking reimbursement in whole or in part for the cost of the work contemplated by this Contract from a third party, including but not limited to, various County, State, and Federal agencies or subdivisions. The reimbursement sought by CITY may be dependent upon, among other items, CONTRACTOR's compliance with the terms and conditions of this Contract and the furnishing of Subrecipient Requirement information by CONTRACTOR to CITY. CONTRACTOR agrees to fully cooperate with CITY in any requests of CITY to fulfill CITY's Subrecipient Requirements and to otherwise obtain the sought after reimbursement. CONTRACTOR agrees and recognizes that the failure to comply with all the terms and conditions of this Contract and the furnishing of Subrecipient Requirement information to CITY by CONTRACTOR may result in the CITY failing to obtain the sought after reimbursement in whole or in part for the cost of the work contemplated by this Contract and that such failure by the CONTRACTOR shall constitute a material default under this Contract.

ARTICLE 50 – WAIVER OF TRIAL BY JURY

IN THE EVENT OF LITIGATION ARISING FROM THIS CONTRACT, CITY AND CONTRACTOR KNOWINGLY, VOLUNTARILY AND INTENTIONALLY WAIVE ANY RIGHT TO A TRIAL BY JURY. CITY AND CONTRACTOR HEREBY ACKNOWLEDGE THAT THIS WAIVER PROVISION IS A MATERIAL INDUCEMENT FOR EACH PARTY AGREEING TO ENTER INTO THIS CONTRACT.

ARTICLE 51 - SCRUTINIZED COMPANIES

a. As provided in Section. 287.135, Florida Statutes, by entering into this Contract or performing any work in furtherance hereof, the CONTRACTOR certifies that it, its affiliates, suppliers, subcontractors and consultants who will perform hereunder, have not been placed on the Scrutinized Companies that boycott Israel List, or is engaged in a boycott of Israel, pursuant to Section 215.4725, Florida Statutes. Pursuant to Section 287.135(3)(b), Florida Statutes, if CONTRACTOR is found to have been placed on the Scrutinized Companies that Boycott Israel List or is engaged in a boycott of Israel, this Contract may be terminated at the option of the CITY.

b. **When contract value is greater than $1 million:** As provided in Section. 287.135, Florida Statutes, by entering into this Contract or performing any work in furtherance hereof, the CONTRACTOR certifies that it, its affiliates, suppliers, subcontractors and consultants who will perform hereunder, have not been placed on the Scrutinized Companies With Activities in Sudan List or Scrutinized Companies With Activities in The Iran Petroleum Energy Sector List created pursuant to Section.215.473, Florida Statutes or is engaged in business operations in Cuba or Syria.

If the CITY determines, using credible information available to the public, that a false certification has been submitted by CONTRACTOR, this Contract may be terminated and a civil penalty equal to the greater of $2 million or twice the amount of this Contract shall be imposed, pursuant to Section. 287.135, Florida Statutes. Said certification must also be submitted at the time of Contract renewal, if applicable.

ARTICLE 52 – DISCLOSURE OF FOREIGN GIFTS AND CONTRACTS WITH FOREIGN COUNTRIES OF CONCERN

Pursuant to F.S. 286.101, as may be amended, by entering into this Contract or performing any work in furtherance thereof, the CONTRACTOR certifies that it has disclosed any current or prior interest of, any contract with, or any grant or gift received from a foreign country of concern where such interest, contract, or grant or gift has a value of $50,000 or more and such interest existed at any time or such contract or grant or gift was received or in force at any time during the previous five (5) years.

ARTICLE 51 – PROHIBITION AGAINST CONSIDERING SOCIAL, POLITICAL OR IDEOLOGICAL INTERESTS IN GOVERNMENT CONTRACTING – F.S. 287.05701

CONTRACTOR is hereby notified of the provisions of section 287.05701, Florida Statutes, as amended, that the CITY will not request documentation of or consider a CONTRACTOR's social, political, or ideological interests when determining if the CONTRACTOR is a responsible CONTRACTOR. CONTRACTOR is further notified that the CITY's governing body may not give preference to a CONTRACTOR based on the CONTRACTOR's social, political, or ideological interests.

ARTICLE 52 - HUMAN TRAFFICKING AFFIDAVIT

Pursuant to Florida Statue 787.06, CONTRACTOR warrants and represents that it does not use coercion

ARTICLE 55 – PROHIBITION AGAINST USING DIVERSITY, EQUITY, AND INCLUSION MATERIAL - F.S. 287.139

CONTRACTOR/CONSULTANT hereby certifies to the City that CONTRACTOR/CONSULTANT does not

and will not use City funds in requiring its employees, contractors, volunteers, vendors, or agents to ascribe to, study, or be instructed using materials relating to diversity, equity, and inclusion as defined in section 125.595, Florida Statute, as amended. CONTRACTOR/CONSULTANT has executed Certification for the Prohibition Against Using Diversity, Equity, and Inclusion Material - F.S. 287.139, which is attached hereto and incorporated herein by reference.

IN WITNESS WHEREOF, the parties unto this Contract have set their hand and seal on the day and year above written.

CITY OF RIVIERA BEACH

BY: _____
DOUGLAS LAWSON,
MAYOR

ATTEST:

BY: _____
DEBRAH S. HALL
CERTIFIED MUNICIPAL CLERK
ACTING CITY CLERK

APPROVED AS TO TERMS AND CONDITIONS

BY: _____
JOSHUA NIEMANN
UTILITY SPECIAL DISTRICT
EXECUTIVE DIRECTOR

APPROVED AS TO FORM AND LEGAL SUFFICIENCY

BY: _____
DAWN S. WYNN
CITY ATTORNEY

Date: _____

RAZORBACK LLC

BY: _____
ANTHONY HOULLIS,
PRESIDENT

RESPONSIVESS REVIEW: RFP 26-018 AERIAL PIPE CROSSINGS					
Item No.	**Vendor Name**	**Hinterland Group**	**SouthernStar**	**Shamrock Restoration**	**Razorback LLC**
1	**Authorized Signatories Form**	YES	YES	YES	YES
2	**Conflict of Interest Disclosure Form**	YES	YES	YES	YES
3	**General Certifications**	YES	YES	YES	YES
4	**Human Trafficking Affidavit**	YES	YES	YES	YES
5	**Litigation Statement**	YES	YES	YES	YES
6	**Public Entity Crimes Affidavit**	YES	YES	YES	YES
7	**Required References**	YES	YES	YES	YES
8	**SBE 1**	YES	YES	YES	YES
9	**SBE 2**	YES	YES	YES	YES
10	**Bid Bond**	YES	YES	YES	YES
11	**Payment Bond Acknowledgement Form**	YES	YES	YES	YES
12	**Performance Bond Acknowledgement Form**	YES	YES	YES	YES
13	**General Contractors License**	YES	YES	YES	YES
14	**Sunbiz Certifciate of Good Standing**	YES	YES	YES	YES
15	**e-Verify Certification**	YES	YES	NO	YES
	Local Vendor Preference Status (Optional)	YES	N/A	N/A	N/A
	Responsive / Non-Responsive	RESPONSIVE	RESPONSIVE	**NON-RESPONSIVE**	RESPONSIVE

Riviera Beach - Utility Special District

To: Honorable Mayor, Chairperson and Board Members

From: Joshua Niemann, Utility Special District Executive Director

Through: William Wilkins, City Manager

Subject: **Resolution Number 76-26UD: A Resolution of the Board of Directors of the City of Riviera Beach Utility Special District, Palm Beach County, Florida, authorizing the use of Polk County Continuing Solicitation CS #25-303, Plumbing Equipment, Fixtures, and Supplies, for the replacement of the Fine Grit Classifier Auger at the Water Treatment Plant with BAR Environmental, Inc. in an amount not to exceed $44,985.00 from Account Number 41131103-546000; and authorizing the Utility Special District Finance Director to make payments from Account Number 41131103-546000 in an amount not to exceed $44,985.00; and providing an effective date.**

Date: November 23, 2026

CC: General Public

Background:

This purchase is critical to support the continued operation and reliability of the Water Treatment Plant's RDP system and ensure the facility remains in compliance with all Federal, State, and Local regulations governing water treatment operations. Through the use of the Polk County Contract Solicitation CS #25-303, the District is able to procure the replacement of the Fine Grit Classifier Auger from BAR Environmental, Inc. through a competitively awarded governmental contract.

The Fine Grit Classifier Auger is a critical component of the Water Treatment Plant's residuals handling and grit removal system. Replacement of this equipment is necessary to maintain proper operation of the RDP system and associated treatment processes, ensuring reliable solids handling, reducing equipment downtime, and preventing operational disruptions that

could negatively impact plant performance.
This investment will help preserve the long-term reliability and efficiency of the Water Treatment Plant while reducing maintenance risks associated with aging infrastructure. Completion of this project will support the District's commitment to maintaining critical treatment infrastructure, protecting public health, and delivering safe, reliable drinking water to its customers.

City Goals:
The Citywide Goal is to Accelerate Operational Excellence.

Fiscal/Budget Impact:
$44,985.00

Recommendation:
Staff recommends a Motion to approve Resolution Number 76-26UD.

Attachments:
1. Resolution_Number_76-26UD.docx
2. Estimate_DR1020261_from_BAR_Environmental_Supply_Inc.pdf
3. ACORD Form 20261014-131108.pdf
4. Polk Co Contract CS 25303.pdf
5. PBA_25_26-215_BAR_Environmental.cleaned.pdf (SECURED).pdf

Resolution Number 76-26UD

A Resolution of the Board of Directors of the City of Riviera Beach Utility Special District, Palm Beach County, Florida, authorizing the use of Polk County Continuing Solicitation CS #25-303, Plumbing Equipment, Fixtures, and Supplies, for the replacement of the Fine Grit Classifier Auger at the Water Treatment Plant with BAR Environmental, Inc. in an amount not to exceed $44,985.00 from Account Number 41131103-546000; and authorizing the Utility Special District Finance Director to make payments from Account Number 41131103-546000 in an amount not to exceed $44,985.00; and providing an effective date.

Whereas, Polk County, a political subdivision of the State of Florida, issued Continuing Solicitation CS #25-303, Plumbing Equipment, Fixtures, and Supplies, under which BAR Environmental, Inc. has been placed on the County's Qualified Vendor List through March 31, 2030, to provide plumbing equipment, instrumentation, and supplies for water, wastewater, and reclaimed water utility operations at a ten percent (10%) discount off the vendor's current list price; and

Whereas, in its Signature Acknowledgement for CS #25-303, BAR Environmental, Inc. agreed that the solicitation may be used by any other governmental agency, thereby allowing the Utility Special District to piggyback the pricing, terms, and conditions of CS #25-303; and

Whereas, the Utility Special District is responsible for maintaining and operating critical water treatment infrastructure to ensure reliable treatment and delivery of potable water to customers; and

Whereas, the existing Fine Grit Classifier Auger at the Water Treatment Plant requires replacement to maintain proper operation of the RDP system and associated treatment equipment**;** and

Whereas, the District requires funding in the amount of $44,985.00 for the replacement and rehabilitation of the Fine Grit Classifier Auger at the Water Treatment Plant; and

Whereas, the Board authorizes the Utility Special District Finance Director to make payments in an amount not to exceed $44,985.00 to BAR Environmental Inc. from account number 41131103-546000; and

Whereas, this Resolution shall take effect upon approval of the Utility Special District Board.

Now, Therefore, be it resolved by the City of Riviera Beach Utility Special District, Palm Beach County, Florida, as follows:

Section 1. That the Utility Special District Board authorizes the Utility Special District Finance Director to make payments to BAR Environmental Inc. from operating account 41131103-546000 in an amount not to exceed $44,985.00.

Section 2. The Executive Director of the Utility Special District, or designee, is authorized to execute all documents necessary to carry out the intent of this Resolution.

Section 3. This Resolution shall take effect immediately upon its passage and approval by the City of Riviera Beach Utility Special District Board of Directors.

Passed and Adopted this _____ day of _____, 2026.

APPROVED:

_____
Glen Spiritis, Ph.D
Chairperson

_____
Fercella Davis-Panier
Vice-Chairperson

ATTEST:

_____
Debrah Hall
Master Municipal Clerk
District Clerk

MOTIONED BY: _____

SECONDED BY: _____

B. GUYTON: ____

K. MILLER-ANDERSON: ____

S. LANIER: ____

G. SPIRITIS: ____

F. DAVIS-PANIER:

Reviewed as to Legal Sufficiency

_____
Dawn S. Wynn, District Attorney

Date: _____

BAR Environmental Supply, Inc.
100 Winners Cir N Ste 420
Brentwood, TN 37027
+16153730788

Quote

ADDRESS
City of Riviera Beach
600 West Blue Heron Blvd
Rivera Beach, FL 33404

SHIP TO
City of Riviera Beach
600 West Blue Heron Blvd
Rivera Beach, FL 33404

QUOTE # DR102026-1
DATE 10/20/2026
EXPIRATION DATE 11/20/2026

ACTIVITY	QTY	RATE	AMOUNT
Riviera Beach Water Treatment Plant – RDP Fine Grit Classifier Auger Replacement [] Scope of Services BAR Environmental will provide the labor, equipment, and miscellaneous materials necessary to complete the removal and replacement of the existing fine grit classifier auger assembly components. The scope of work includes the following: 1 Submittal Visit: Provide one technician for a three-day submittal visit to review the equipment and work requirements. Any unknown conditions or changes to the scope identified during this visit will be addressed through a change order. 2. Auger Removal and Installation: Remove the existing auger and install a new auger. 3. Sealing Plate Installation: Weld a plate to the underside of the assembly to seal the area and prevent leakage. 4. Auger Block Replacement: Remove and replace the existing auger block. 5. Crane and Equipment: Provide a crane and the necessary equipment to support the removal and installation activities. 6. Work Area Cleanup: Clean up the work area upon completion of the work. []Exclusions and Customer Responsibilities The following exclusions and responsibilities should be clearly identified: - Electrical Work: Electrical power and any required electrical work are to be provided by others unless specifically included in the scope. - Utilities: All required utilities are to be provided by others unless specifically included in the scope.	1	44,985.00	44,985.00

-- Unless specifically shown on this quote, sales tax, installation, startup is not included.
--Standard shipping cost, if shown, is an estimate and will be billed at actual cost. If shipping cost is not shown, it will be prepaid and added to your invoice.

ACTIVITY	QTY	RATE	AMOUNT

- Equipment Shutdowns and Bypasses: Any required shutdowns or bypasses are to be provided by others unless specifically included in the scope.
- Site Access and Safety: The customer is responsible for providing clear and safe access to the work area and equipment.
- Unforeseen Conditions: Unknown conditions or changes to the scope identified during the submittal visit will require a change order.
- Delays: Estimated on-site durations exclude delays caused by weather, customer site conditions, or manufacturer delays.
- Additional Work: Work not specifically identified in this scope is excluded unless mutually agreed upon through an approved change order.

_____

SUBTOTAL	44,985.00
TAX	0.00
TOTAL	**$44,985.00**

Accepted By

Accepted Date

-- Unless specifically shown on this quote, sales tax, installation, startup is not included.

--Standard shipping cost, if shown, is an estimate and will be billed at actual cost. If shipping cost is not shown, it will be prepaid and added to your invoice.

CERTIFICATE OF LIABILITY INSURANCE

DATE (MM/DD/YYYY): 10/14/2026

THIS CERTIFICATE IS ISSUED AS A MATTER OF INFORMATION ONLY AND CONFERS NO RIGHTS UPON THE CERTIFICATE HOLDER. THIS CERTIFICATE DOES NOT AFFIRMATIVELY OR NEGATIVELY AMEND, EXTEND OR ALTER THE COVERAGE AFFORDED BY THE POLICIES BELOW. THIS CERTIFICATE OF INSURANCE DOES NOT CONSTITUTE A CONTRACT BETWEEN THE ISSUING INSURER(S), AUTHORIZED REPRESENTATIVE OR PRODUCER, AND THE CERTIFICATE HOLDER.

IMPORTANT: If the certificate holder is an ADDITIONAL INSURED, the policy(ies) must have ADDITIONAL INSURED provisions or be endorsed. If SUBROGATION IS WAIVED, subject to the terms and conditions of the policy, certain policies may require an endorsement. A statement on this certificate does not confer rights to the certificate holder in lieu of such endorsement(s).

PRODUCER	CONTACT NAME:	
Brown & Brown Insurance Services, Inc. A Division of Brown & Brown TN 6 Cadillac Drive, Suite 200 Brentwood TN 37027	PHONE (A/C, No, Ext): (615) 385-2860	FAX (A/C, No): (615) 385-8360
	E-MAIL ADDRESS: leeann.sterry@bbrown.com	

INSURED	INSURER(S) AFFORDING COVERAGE	NAIC #
BAR Environmental, Inc.; BAR Environmental Supply, Inc. 100 Winner Circle N Suite 420 Brentwood TN 37027	INSURER A : Frankenmuth Insurance Company	13986
	INSURER B : Bridgefield Casualty Insurance Company	10335
	INSURER C :	
	INSURER D :	
	INSURER E :	
	INSURER F :	

COVERAGES **CERTIFICATE NUMBER:** 04/01/2026-27 MASTER **REVISION NUMBER:**

THIS IS TO CERTIFY THAT THE POLICIES OF INSURANCE LISTED BELOW HAVE BEEN ISSUED TO THE INSURED NAMED ABOVE FOR THE POLICY PERIOD INDICATED. NOTWITHSTANDING ANY REQUIREMENT, TERM OR CONDITION OF ANY CONTRACT OR OTHER DOCUMENT WITH RESPECT TO WHICH THIS CERTIFICATE MAY BE ISSUED OR MAY PERTAIN, THE INSURANCE AFFORDED BY THE POLICIES DESCRIBED HEREIN IS SUBJECT TO ALL THE TERMS, EXCLUSIONS AND CONDITIONS OF SUCH POLICIES. LIMITS SHOWN MAY HAVE BEEN REDUCED BY PAID CLAIMS.

INSR LTR	TYPE OF INSURANCE	ADDL INSD	SUBR WVD	POLICY NUMBER	POLICY EFF (MM/DD/YYYY)	POLICY EXP (MM/DD/YYYY)	LIMITS	
A	[X] COMMERCIAL GENERAL LIABILITY [ ] CLAIMS-MADE [X] OCCUR GEN'L AGGREGATE LIMIT APPLIES PER: [ ] POLICY [X] PRO-JECT [ ] LOC [ ] OTHER:			6660851	04/01/2026	04/01/2027	EACH OCCURRENCE DAMAGE TO RENTED PREMISES (Ea occurrence) MED EXP (Any one person) PERSONAL & ADV INJURY GENERAL AGGREGATE PRODUCTS - COMP/OP AGG [ ]	$ 1,000,000 $ 1,000,000 $ 10,000 $ 1,000,000 $ 2,000,000 $ 2,000,000 $
A	AUTOMOBILE LIABILITY [X] ANY AUTO [ ] OWNED AUTOS ONLY [ ] SCHEDULED AUTOS [X] HIRED AUTOS ONLY [X] NON-OWNED AUTOS ONLY			6660850	04/01/2026	04/01/2027	COMBINED SINGLE LIMIT (Ea accident) BODILY INJURY (Per person) BODILY INJURY (Per accident) PROPERTY DAMAGE (Per accident) [ ]	$ 1,000,000 $ $ $ $
A	[X] UMBRELLA LIAB [X] OCCUR [ ] EXCESS LIAB [ ] CLAIMS-MADE [ ] DED [X] RETENTION $ 0			6660851	04/01/2026	04/01/2027	EACH OCCURRENCE AGGREGATE [ ]	$ 5,000,000 $ 5,000,000 $
B	WORKERS COMPENSATION AND EMPLOYERS' LIABILITY ANY PROPRIETOR/PARTNER/EXECUTIVE OFFICER/MEMBER EXCLUDED? (Mandatory in NH) Y / N: N If yes, describe under DESCRIPTION OF OPERATIONS below	N / A		196-54870	04/01/2026	04/01/2027	[X] PER STATUTE [ ] OTH-ER E.L. EACH ACCIDENT E.L. DISEASE - EA EMPLOYEE E.L. DISEASE - POLICY LIMIT	 $ 1,000,000 $ 1,000,000 $ 1,000,000
A	CONTRACTORS EQUIPMENT LEASED/ RENTED COVERAGE			6660851	04/01/2026	04/01/2027	LEASED/RENTED LIMIT DEDUCTIBLE	100,000 2,500

DESCRIPTION OF OPERATIONS / LOCATIONS / VEHICLES (ACORD 101, Additional Remarks Schedule, may be attached if more space is required)

CERTIFICATE HOLDER

CITY OF RIVIERA BEACH
600 W. BLUE HERON BLVD
RIVIERA BEACH FL 33404

CANCELLATION

SHOULD ANY OF THE ABOVE DESCRIBED POLICIES BE CANCELLED BEFORE THE EXPIRATION DATE THEREOF, NOTICE WILL BE DELIVERED IN ACCORDANCE WITH THE POLICY PROVISIONS.

AUTHORIZED REPRESENTATIVE

© 1988-2015 ACORD CORPORATION. All rights reserved.

CONTINUING SOLICITATION FOR COMMODITIES

CS #25-303, PLUMBING EQUIPMENT, FIXTURES, AND SUPPLIES

INTRODUCTION:

Polk County, a political subdivision of the State of Florida, is seeking Submittals from vendors interested in providing plumbing equipment, fixtures, instrumentation, and supplies for a set discount. The commodities ("Goods") requested include, but are not limited to, piping, filters, sensors, controllers, valves, pumps, and other instrumentation needed to assist with water, wastewater, and reclaimed water utilities operations as well as other divisions' plumbing supply needs.

All responsive, responsible Vendors whose Submittal meets the minimum qualifications and have provided all the forms/documentation required of this solicitation, will be placed on a Qualified Vendor List (QVL) to provide the goods.

Vendors shall provide Polk County a **10% discount** off the current list price. List price means the vendor's current pricing. Current pricing is the vendor's current price for an item, whether it is on sale or not. Example: Invoices must show at a minimum either original price, plus a 10% discount, or the sale price, plus a 10% discount. The percent discount can be shown by individual item being purchased or 10% off the total order.

QUESTIONS: Questions regarding this solicitation should be directed to Ari Goldstein, Sr. Procurement Analyst at arigoldstein@polk-county.net.

QUALIFICATIONS

1. Vendor must have been in business under the same FEIN/TIN number for the past two (2) years. Evidence should be submitted with the submittal.
2. Vendors must possess a Polk County Local Business Tax Receipt (f/k/a Business License) to do business with the County. A copy of such license must be provided to the Procurement Division before award is made to the vendor.
3. Provide a primary and secondary Vendor point of contact for this solicitation to include:
    - Contact Name
    - Phone Number
    - Email Address

The Contact persons provided will be the primary and secondary contact for the County to call/communicate with during the term of the solicitation. If at any time this information changes it will be the vendors sole responsibility to update Procurement Division staff as soon as possible.

All documentation and information requested in the Qualifications section should be included with the vendor's submittal or must be provided prior to being placed on the QVL.

SPECIFICATIONS

1. All products will be shipped Free on Board (FOB) Destination.

WHEN GOODS ARE NEEDED

Divisions will try and share the amount of purchases between vendors that have been placed on the QVL, yet precedence will be for employees in the field to choose a vendor that is closest in proximity to assist with an efficient use of the employees' time. When the County contacts a vendor and does not get a response within a reasonable period, the County reserves the right to call the next vendor on the QVL, and so on.

County employees working in the field may purchase the goods from a vendor on the QVL that is closest to them at the time the goods are needed. When an employee makes purchases in person, the vendor should ensure they show their Polk County employee badge to prove employment with the county and that they use their Polk County purchasing card. The vendor is responsible for ensuring that the name on the badge matches the name on the purchasing card and verify that the picture of the employee on the County I.D. badge matches the person making the purchase. Vendors may require other valid I.D. methods from the employee in accordance with their procedures.

If purchasing items from the vendor via a purchase order, the vendor should provide an itemized quote/invoice to include a detailed description of each item and the list price for each item. A 10% discount is to be shown by individual item being purchased or a 10% discount off the total order.

SPECIAL CONDITIONS

1. The period of performance for this solicitation is through March 31, 2030 ("Termination Date"). Unless a Vendor is otherwise terminated in accordance with General Information Item #11. If the County provides notice to the Vendor at least 30 days prior to the Termination Date that it has not put in place a new solicitation for the goods, then this Solicitation shall remain in effect on a month-to-month basis until terminated by written notice from the County Procurement Division to the Vendor, but not longer than four (4) months following the termination date.

2. Vendor should provide a detailed invoice/receipt within 30 days of delivery of the goods, or immediately upon an employee using their County purchasing card.
   a. Each invoice or receipt should include:
      - Purchase order number, if applicable
      - A detailed description of the good(s) provided to include the vendor's current retail price for item, whether it is on sale or not, plus a 10% discount.

        Example: Invoices must show at a minimum either current retail price, plus a 10% discount, or the sale price, plus a 10% discount.
      - No sales tax is to be charged as the County is tax exempt
      - Shipping or freight must be F.O.B. destination and does not include a discount.
3. Vendors must register in our Vendor Database if you have not already done so prior to being placed on the QVL. A purchase order or credit card payment cannot be issued to a vendor until they have registered. You may register by going to the following link: https://www.polk-county.net/business/procurement/vendor-information/.
4. Any amendments to this solicitation, which includes an increase/decrease in pricing, additions, deletions, or modifications will require the Procurement Director's (or designee) approval. All vendors will be required to acknowledge and approve all amendments to remain on the QVL.

DISCOUNT/RATE

10% discount off the current list price or sale price.

SUBMITTAL INFORMATION

By submitting the requirements of this Continuing Solicitation for Commodities, Vendor acknowledges and agrees to its acceptance of all General Terms and Conditions, any Specifications, Special Conditions, and Rates/Discount contained herein.

All requirements must be submitted for the Vendor to be evaluated by both the Procurement and Utilities Divisions. Notification regarding Award of the solicitation will be given to the Vendor by the Procurement Division, based upon evaluation of the submitted materials.

FORMS/OTHER DOCUMENTATION

Submittals should include the following:

- Evidence of FEIN/TIN number as required in the Qualifications.
- References as required in the Qualifications, if applicable.

- Vendor Point of Contact Information as required in the Qualifications.
- Copy of Polk County Local Business Tax Receipt
- Submittal Sheet/Signature Acknowledgement
- Drug-Free Workplace Form
- Insurance Certificate meeting requirements of solicitation
- Affidavit Certification Immigration Laws
- Employment Eligibility Verification (E-Verify) Certification

SUBMITTAL OF RESPONSES

Interested parties are invited to submit their responses to the Procurement Division via email to procurement@polk-county.net or mail/hand deliver to:

Polk County Procurement Division
330 West Church St., Room 150
Bartow, Florida 33830
(863) 534-6415
Attn: Ari Goldstein

Vendor Instructions and General Information

Vendor Instructions:

To ensure acceptance of the submittal, follow these instructions:

Solicitation Documents Must Be Delivered to The Procurement Division.

1. **Execution of Submittal**: Submittal must contain a signature of an authorized representative in the space provided on the Signature Acknowledgement form.
2. **County as Gatekeeper of Documents**: This document is issued by Polk County and as such shall be the sole distributor of all amendments (changes) to these documents. It is the responsibility of the vendor to determine issuance of documents directly with the Procurement Division. The County is not responsible for any solicitations issued through subscriber, publications, or other sources not connected with the County and the vendor should not rely on such sources for information regarding the solicitation.
3. **Taxes**: Vendors are responsible for the payment of any applicable taxes that are connected to the purchase of any materials or subcontractors used in the execution of the solicitation.
4. **Discounts**: Vendors may offer a cash discount for prompt payment.
5. **Mistakes**: Vendors are required to examine the specifications, delivery schedule, prices and all instructions pertaining to the requirements of this solicitation. Failure to do so will be at vendor's risk.
6. **Invoicing and Payment**: Vendor shall submit an invoice to the County at the prices contained herein. **An original invoice shall be submitted to the appropriate User Division.** The vendor shall include the solicitation number and/or the purchase order number on all invoices. By submitting an invoice, Vendor's Project Manager or any authorized officer is attesting to the correctness and accuracy of all charges. Invoices will be processed for payment when approved by the appropriate Division's Project Manager or designee. The County's payment of an invoice shall not constitute evidence of the County's acceptance of the Vendors performance of the Service or the County's acceptance of any work.
7. **Conflict of Interest**: All vendors must disclose, with their submittal, the name of any officer, director or agent who is also an employee of the County or any of their agencies. Furthermore, all vendors must disclose the name of any County employee who owns, directly or indirectly, any interest of any amount in the vendor's firms or any of their branches. Award of this solicitation shall be subject to the provisions of Chapter 112, Florida Statutes.
8. **Warranty**: Unless otherwise specified, the vendor agrees that the goods furnished under this solicitation shall be covered by the most favorable commercial warranty the vendor gives to any customer for comparable goods, and that the rights and remedies provided herein are in addition to and do not limit any rights afforded to the County by any other provision of this solicitation.

9. **Liability**: The vendor shall hold and save the County, its officers, agents and employees harmless from liability of any kind in the performance of this solicitation and against claims by third parties resulting from the supplier's breach of contract or the supplier's negligence.
10. **Patents and Royalties**: The vendor, without exception, shall indemnify and save harmless the County and its employees from liability of any nature or kind, including cost and expenses for, or on account of, any copyrighted, patented or non-patented invention, process or article manufactured or used in the performance of the solicitation, including its use by the County. If the vendor uses any design, device or material covered by letters, patent or copyright, it is mutually agreed and understood without exception that the solicitation prices shall include all royalties or cost arising from the use of such design, device or material in any way involved in the work.
11. **Indemnification**: Vendor, to the extent permitted by law, shall indemnify, defend (by counsel reasonably acceptable to County), protect and hold the County, and its officers, employees and agents, harmless from and against any and all, claims, actions, causes of action, liabilities, penalties, forfeitures, damages, losses, and expenses whatsoever (including, without limitation, attorneys' fees, costs, and expenses incurred during negotiation, through litigation and all appeals therefrom) including, without limitation, those pertaining to the death of or injury to any person, or damage to any property, arising out of or resulting from (i) the failure of Vendor to comply with applicable laws, rules or regulations, (ii) the breach by Vendor of its obligations under any Agreement with the County entered into pursuant to this solicitation, (iii) any claim for trademark, patent, or copyright infringement arising out of the scope of Vendor's performance or nonperformance of the Agreement, or (iv) the negligent acts, errors or omissions, or intentional or willful misconduct, of Vendor, its professional associates, subcontractors, agents, and employees; provided, however, that Vendor shall not be obligated to defend or indemnify the County with respect to any such claims or damages arising out of the County's sole negligence. The obligations imposed by this Section shall survive the expiration or earlier termination of the Agreement.
12. **Public Entity Crimes:** The Vendor declares and warrants that neither the Vendor nor any of the Vendor's affiliates, as that term is defined in Section 287.133, Florida Statutes, are subject to the restrictions in Section 287.133, Florida Statutes, regarding the commission of a public entity crime. If during the term of this Agreement, the Vendor or any affiliate is convicted of a public entity crime or is otherwise prohibited from performing work for or transacting business with the County pursuant to Section 287.133, Florida Statutes, then the Vendor shall be in material default of this Agreement, and in such case, the County shall have the rights and remedies as provided herein.
13. **Submittals:** All submittals must be completed and submitted either by mail or submitted electronically by email or fax. The submittal(s) shall be submitted on the forms provided by Polk County. All submittals are subject to the conditions herein; failure to comply will subject submittal to rejection.

14. **Prices, Terms and Payment**: Prices include all packing, handling, shipping charges and delivery to any point within Polk County. Discount time will be computed from the date of satisfactory delivery at place of acceptance.
15. **Safety Standards**: Unless otherwise stipulated in the solicitation, all manufactured items and fabricated assemblies shall comply with applicable requirements of Occupational Safety and Health Act (OSHA) and carry evidence of Underwriters Laboratories' Listings (UL).
16. **Packaging**: All containers shall be suitable for storage or shipment, and all prices should include standard commercial packaging.
17. **Meets Specifications**: It is understood and agreed that any item offered or shipped as a result of this solicitation shall be new current model unless otherwise specified in the specifications. The vendor represents that all equipment offered under this specification shall meet or exceed the minimum requirements specified. Vendor shall strictly adhere to delivery specifications.
18. **Silence of Specifications**: The apparent silence of this specification and any supplemental specifications to any details or the omission from same of any detailed description concerning any point shall be regarded as meaning that only the best commercial practices are to prevail and that only materials of first quality and correct type, size and design are to be used. All workmanship is to be first quality. All interpretations of these specifications shall be made upon the basis of this statement.
19. **Governmental Restrictions**: In the event that any governmental restrictions may be imposed which would necessitate alteration of the material, quality, workmanship or performance of the items offered on this solicitation prior to delivery, it shall be the responsibility of the supplier to notify the Procurement Division at once. Their letter shall indicate the specific regulation, which required an alteration. The County reserves the right to accept any such alteration, including any price adjustments, or to cancel the contract at no expense to the County.
20. **Toxic Substances: Notice of awarded vendor(s) to provide to Polk County toxic substances (As listed in Chapter 442, Appendix "G" of the FS) if applicable.**
    a. Chapter 442 of the FS states that manufacturers, importers or distributors of any toxic substance shall prepare and provide each direct purchaser of such toxic substance with Material Safety Data Sheet(s), herein referred to as MSDS, which to the best of the manufacturer's, importer's or distributor's knowledge, is current, accurate and complete based on information then reasonably available to the manufacturer, importer or distributor. Upon notification of a new or revised MSDS the manufacturer, importer or distributor, on a timely basis not to exceed three (3) months after notification, shall provide the County with the revised information as it becomes available to the manufacturer, importer or distributor.
    b. Failure to provide the MSDS, when applicable, shall be cause for rejection of submittal.

21. **Inspection, Acceptance and Title**: Inspection and acceptance will be at the designated facility unless otherwise indicated. Title and risk of loss or damage to all items shall be the responsibility of the contract supplier until accepted by the County, unless loss or damage results from negligence by the County.
22. **Samples**: Samples of items, when called for, must be furnished free of expense and may, upon request, be returned at the vendor's expense. Each individual sample must be labeled with vendor's name, manufacturer's brand name and number, solicitation number and item reference. Samples of awarded vendor's items may remain on file with Procurement for the term of the contract. Request for return of samples shall be accompanied by instructions, which include shipping authorization and name of carrier, and must be received within ninety (90) days after award. If instructions are not received within this time, the Procurement Division shall dispose of the samples.
23. **Code of Ethics**: If any vendor violates or is a party to a violation of the code of ethics of Polk County or the State of Florida, with respect to this solicitation, such vendor may be disqualified from performing the work described in this solicitation or from furnishing the goods or services for which the submittal is submitted and shall be further disqualified from submitting on any future solicitations for work, goods, or services for the County.

General Information

1. **Definitions**:
   - The term "County" means the Polk County, a political subdivision of the State of Florida, and its authorized designees, agents or employees.
   - The term "Contract" means this solicitation document, any and all Addenda or Amendment issued, and the Contractors submittal.
   - The term "Vendor", "Contractor" means the qualified vendor(s) who executes a contract with the County.
2. **Qualified vendor(s):** As the best interest of the County may require, the right is reserved to place vendors on the QVL; to reject all submittals or waive any minor irregularities or technicalities in submittals received. In determining a responsive and responsible vendor, the following may be considered:
   - Vendor's evaluation – quality of performance on previous projects.
   - The ability, capacity, equipment and skill of the vendor to fulfill the contract.
   - Whether or not the vendor can fulfill the contract within the time specified, without delay or interference.
   - The character, integrity, reputation, judgment, experience and efficiency of the vendor.
   - The previous and existing compliance by the vendor with laws and ordinances relating to the contract.

- The sufficiency of the financial resources to fulfill the contract to provide the goods and/or services.
- The quality, availability and adaptability of the suppliers or contractual services to the particular use required.
- The ability of the vendor to provide future maintenance and service, as required or needed.
- The number and scope of conditions attached to the solicitation.

3. **Effective Date:** The date of issuance of a Notice to Proceed by the County Procurement Division.
4. **Prohibition Against Considering Vendor Interests:** In accordance with Section 287.05701, Florida Statutes, the County may not (i) request documentation of or consider a Vendor's social, political, or ideological interests when determining if the Vendor is a responsible vendor; or (ii) give preference to a Vendor based on the Vendor's social, political, or ideological interests.
5. **Non-Conformance to Solicitation Conditions**: Goods not delivered as per delivery date in solicitation and purchase order may result in vendor being found in default, in which event any and all re-procurement costs may be charged against the defaulting vendor. This non-conformance to solicitation conditions may result in immediate cancellation of the purchase order.
6. **Assignment**: Any purchase order issued pursuant to this solicitation and the monies which may become due herein are not assignable except with the prior written approval of the Procurement Director or designee.
7. **Disputes**: In the event of any doubt or difference of opinion as to the methods provided herein, or the level of performance rendered, the decision of the user division director shall be final and binding on both parties.
8. **Facilities**: The County reserves the right to inspect the vendor's facilities at any time, with prior notice.
9. **Placing of Orders**: Being placed on the QVL does not constitute an order. Before any goods can be delivered, the vendor must receive written or oral notification in accordance with the practices of the User Division.
10. **Precedence**: Any requirement set forth in any section of the solicitation documents shall be binding as if called for by all sections. If there is a difference in the terms anywhere in this document, the most restrictive shall prevail.
11. **Termination/Suspension**: The County may terminate the Contract resulting from this Solicitation at any time, in whole or in part, in accordance with and subject to the following:
    a. The County may terminate the Contract for the County's convenience by delivering 30 days' prior written notice of termination to the Contractor.
    b. The County may terminate the Contract immediately if the User Division determines that the Contractor is in material default of its Contract obligations,

has notified the Contractor of such default by delivering a Vendor Complaint Form to the Contractor specifically describing the basis of the complaint and the conditions of the Contractor's default, and ten (10) days have passed since the Contractor's receipt of the Vendor Complaint Form without all defaults as described therein having been fully corrected. Notwithstanding anything to the contrary contained herein, the County may terminate the Contract immediately, without notice or any opportunity to cure, if the services rendered for the Contract cause or threaten endangerment to public health, safety or welfare.

c. Upon receipt of any termination notice as described above, the Contractor shall:
   - Immediately discontinue all work unless the County's notice directs otherwise, and
   - Deliver to the County any and all data, reports, summaries, and all other information and materials of any type or nature whatsoever, whether completed or in process, the Contractor may have accumulated or generated in the course of performing the work of the Contract.

d. In the event this Solicitation and/or the resulting Contract is terminated due to the Contractor's material default which is not cured within the allotted time period as described above, the Procurement Director may also suspend or debar the Contractor in accordance with the Suspension and Debarment Section of the County Procurement Procedures Manual. The rights and remedies of the County provided for in this Section are in addition and supplemental to any and all other rights and remedies provided by law or under the Solicitation and/or the resulting Contract.

12. **Annual Appropriations**: The vendor acknowledges that the County, during any fiscal year, shall not expend money, incur any liability, or enter into any agreement which, by its terms, involves the expenditure of money in excess of the amounts budgeted or the reduction of revenues for those budgeted agreements that may be available for expenditure during such fiscal year. Any agreement, verbal or written, made in violation of this subsection is null and void, and no money may be paid on such agreement. Nothing herein contained shall prevent the making of agreements for a period exceeding one year, but any agreement so made shall be executory only for the value of the services to be rendered or agreed to be paid for in succeeding fiscal years. Accordingly, the County's performance and obligation to pay under this agreement is contingent upon annual appropriation.

13. **Price Increases/Decreases, Additions, Deletions, or Revisions** to this Continuing Solicitation for Services, will be issued in the form of an Amendment by the Procurement Division and will be posted on the County's website. All vendors on the QVL will be notified via email and will be required to acknowledge the Amendment and their consent thereto. Any Vendor on the QVL that does not return a signed Acknowledgement of the acceptance of the amendment terms and conditions will be removed from the QVL until such acknowledgement is accepted.

14. **Uncontrollable Forces (Force Majeure)**: Either party hereunder may be temporarily excused from performance if an Event of Force Majeure directly or

indirectly causes its nonperformance. An "Event of Force Majeure" is defined as any event which results in the prevention or delay of performance by a party of its obligations under this Agreement and which is beyond the reasonable control of the nonperforming party. It includes, but is not limited to fire, flood, earthquakes, storms, lightning, epidemic, war, riot, civil disturbance, sabotage, and governmental actions. Neither party shall be excused from performance if non-performance is due to forces which are reasonably preventable, removable, or remediable and which the non-performing party could have, with the exercise of reasonable diligence, prevented, removed, or remedied prior to, during, or immediately after their occurrence. Within five (5) days after the occurrence of an Event of Force Majeure, the non-performing party shall deliver written notice to the other party describing the event in reasonably sufficient detail, along with proof of how the event has precluded the non-performing party from performing its obligations hereunder, and a good faith estimate as to the anticipated duration of the delay and the means and methods for correcting the delay. The non-performing party's obligations, so far as those obligations are affected by the Event of Force Majeure, shall be temporarily suspended during, but no longer than, the continuance of the Event of Force Majeure and for a reasonable time thereafter as may be required for the non-performing party to return to normal business operations. If excused from performing any obligations under this Agreement due to the occurrence of an Event of Force Majeure, the non-performing party shall promptly, diligently, and in good faith take all reasonable action required for it to be able to commence or resume performance of its obligations under this Agreement. During any such time period, the non-performing party shall keep the other party duly notified of all such actions required for it to be able to commence or resume performance of its obligations under this Agreement.

15. **Unauthorized Alien(s)**: The vendor agrees that unauthorized aliens shall not be employed nor utilized in the performance of the requirements of this solicitation. The County shall consider the employment or utilization of unauthorized aliens a violation of Section 274A(e) of the Immigration and Naturalization Act (8 U.S.C. 1324a). Such violation shall be cause for unilateral termination of this Agreement by the County. As part of the response to this solicitation, the qualified vendor will complete and submit the attached form "Affidavit Certification Immigration Laws."

16. **Employment Eligibility Verification (E-Verify)**

A. Unless otherwise defined herein, terms used in this Section which are defined in Section 448.095, Florida Statutes, as may be amended from time to time, shall have the meaning ascribed in said statute.

B. Pursuant to Section 448.095(5), Florida Statutes, the vendor hereto, and any subcontractor thereof, must register with and use the E-Verify system to verify the work authorization status of all new employees of the vendor or subcontractor. The vendor acknowledges and agrees that (i) the County and the vendor may not enter into this Agreement, and the vendor may not enter into any subcontracts hereunder, unless each party to this Agreement, and each party to any subcontracts hereunder, registers with and uses the E-Verify system; and (ii) use of the U.S. Department of Homeland Security's E-Verify

System and compliance with all other terms of this Certification and Section 448.095, Fla. Stat., is an express condition of this Agreement, and the County may treat a failure to comply as a material breach of this Agreement.

C. By entering into this Agreement, the vendor becomes obligated to comply with the provisions of Section 448.095, Fla. Stat., "Employment Eligibility," as amended from time to time. This includes but is not limited to utilization of the E-Verify System to verify the work authorization status of all newly hired employees, and requiring all subcontractors to provide an affidavit attesting that the subcontractor does not employ, contract with, or subcontract with, an unauthorized alien. The vendor shall maintain a copy of such affidavit for the duration of this Agreement. Failure to comply will lead to termination of this Agreement, or if a subcontractor knowingly violates the statute or Section 448.09(1), Fla. Stat., the subcontract must be terminated immediately. If this Agreement is terminated pursuant to Section 448.095, Fla. Stat., such termination is not a breach of contract and may not be considered as such. Any challenge to termination under this provision must be filed in the Tenth Judicial Circuit Court of Florida no later than 20 calendar days after the date of termination. If this Agreement is terminated for a violation of Section 448.095, Fla. Stat., by the vendor, the vendor may not be awarded a public contract for a period of 1 year after the date of termination. The vendor shall be liable for any additional costs incurred by the County as a result of the termination of this Agreement. Nothing in this Section shall be construed to allow intentional discrimination of any class protected by law.

17. **Attorney's Fees and Costs**: Each party shall be responsible for its own legal and attorney's fees, costs and expenses incurred in connection with any dispute or any litigation arising out of, or relating to this Agreement, including attorney's fees, costs and expenses incurred for any appellate or bankruptcy proceedings.

18. **Public Records Law**.

(a)The Vendor acknowledges the County's obligations under Article I, Section 24, of the Florida Constitution and under Chapter 119, Florida Statutes, to release public records to members of the public upon request and comply in the handling of the materials created under this Agreement. The Vendor further acknowledges that the constitutional and statutory provisions control over the terms of this Agreement. In association with its performance pursuant to this Agreement, the Vendor shall not release or otherwise disclose the content of any documents or information that is specifically exempt from disclosure pursuant to all applicable laws.

(b)Without in any manner limiting the generality of the foregoing, to the extent applicable, the Vendor acknowledges its obligations to comply with Section 119.0701, Florida Statutes, with regard to public records, and shall:

(i) keep and maintain public records required by the County to perform the services required under this Agreement;

(ii) upon request from the County's Custodian of Public Records or his/her designee, provide the County with a copy of the requested records or allow the

records to be inspected or copied within a reasonable time at a cost that does not exceed the cost provided in Chapter 119, Florida Statutes, or as otherwise provided by law;

(iii) ensure that public records that are exempt or confidential and exempt from public records disclosure requirements are not disclosed except as authorized by law for the duration of the term of this Agreement and following completion of this Agreement if the Vendor does not transfer the records to the County; and

(iv) upon completion of this Agreement, transfer, at no cost, to the County all public records in possession of the Vendor or keep and maintain public records required by the County to perform the service. If the Vendor transfers all public records to the County upon completion of this Agreement, the Vendor shall destroy any duplicate public records that are exempt or confidential and exempt from public records disclosure requirements. If the Vendor keeps and maintains public records upon completion of this Agreement, the Vendor shall meet all applicable requirements for retaining public records. All records stored electronically must be provided to the County, upon request from the County's Custodian of Public Records, in a format that is compatible with the information technology systems of the County.

(c) **IF THE VENDOR HAS QUESTIONS REGARDING THE APPLICATION OF CHAPTER 119, FLORIDA STATUTES, TO THE VENDOR'S DUTY TO PROVIDE PUBLIC RECORDS RELATING TO THIS AGREEMENT, CONTACT THE COUNTY'S CUSTODIAN OF PUBLIC RECORDS AT:**

RECORDS MANAGEMENT LIAISON OFFICER
POLK COUNTY
330 WEST CHURCH ST.
BARTOW, FL 33830
TELEPHONE: (863) 534-7527
EMAIL: RMLO@POLK-COUNTY.NET

19. **Scrutinized Companies and Business Operations Certification; Termination.**

A. Certification(s).

(i) By its execution of this Agreement, the Vendor hereby certifies to the County that the Vendor is not on the Scrutinized Companies that Boycott Israel List, created pursuant to Section 215.4725, Florida Statutes, nor is the Vendor engaged in a boycott of Israel, nor was the Vendor on such List or engaged in such a boycott at the time it submitted its bid, proposal, quote, or other form of offer, as applicable, to the County with respect to this Agreement.

(ii) Additionally, if the value of the goods or services acquired under this Agreement are greater than or equal to One Million Dollars ($1,000,000), then the Vendor further certifies to the County as follows:

(a) the Vendor is not on the Scrutinized Companies with Activities in Sudan List, created pursuant to Section 215.473, Florida Statutes; and

(b) the Vendor is not on the Scrutinized Companies with Activities in the Iran Petroleum Energy Sector List, created pursuant to Section 215.473, Florida Statutes; and

(c) the Vendor is not engaged in business operations (as that term is defined in Florida Statutes, Section 287.135) in Cuba or Syria; and

(d) the Vendor was not on any of the Lists referenced in this subsection A(ii), nor engaged in business operations in Cuba or Syria when it submitted its proposal to the County concerning the subject of this Agreement.

(iii) The Vendor hereby acknowledges that it is fully aware of the penalties that may be imposed upon the Vendor for submitting a false certification to the County regarding the foregoing matters.

B. Termination. In addition to any other termination rights stated herein, the County may immediately terminate this Agreement upon the occurrence of any of the following events:

(i) The Vendor is found to have submitted a false certification to the County with respect to any of the matters set forth in subsection A(i) above, or the Vendor is found to have been placed on the Scrutinized Companies that Boycott Israel List or is engaged in a boycott of Israel.

(ii) The Vendor is found to have submitted a false certification to the County with respect to any of the matters set forth in subsection A(ii) above, or the Vendor is found to have been placed on the Scrutinized Companies with Activities in Sudan List, or the Scrutinized Companies with Activities in the Iran Petroleum Energy Sector List, or has been engaged in business operations in Cuba or Syria, and the value of the goods or services acquired under this Agreement are greater than or equal to One Million Dollars ($1,000,000).

20. **No Construction Against Drafter**: The Parties acknowledge that this Agreement and all the terms and conditions contained herein have been fully reviewed and negotiated by the Parties. Accordingly, any rule of construction to the effect that ambiguities are to be resolved against the drafting party shall not apply in interpreting this Agreement.

CS 25-303, Plumbing Equipment, Fixtures, and Supplies

Signature Acknowledgement

(Submittal Page)

To Polk County, a Political Subdivision of the State of Florida

Date: October 10, 2025

I certify that this submittal is made without prior understanding, agreement or connection with any corporation, firm or person submitting a submittal for the same construction, service or material and is in all respects fair and without collusion or fraud. I agree to abide by all conditions of this solicitation and certify that I have read and understand the solicitation documents. I have completed and submitted all submittal forms, and I am authorized to sign this submittal for the vendor. In submitting a submittal to the County, the vendor offers and agrees that if the submittal is accepted, the vendor will convey, sell, assign or transfer to the County all rights, titles and interests in and to all causes of action it may now or hereafter acquire under the Anti-Trust Laws of the United States and the State of Florida for price fixing relating to the particular commodities or services purchased or acquired by the County. At the County's discretion, such assignment shall be made and become effective at the time the County tender's final payment to the vendor.

Vendor Name: BAR Environmental, Inc.

Mailing Address: 100 Winner's Circle N. Suite 420

City: Brentwood

State: Tennessee

Zip Code: 37027

(Area Code) Telephone Number: (615) 373-0788

Toll Free Number:

Email Address: bclemmer@barenviro.com

Authorized Signature:

Name: Bubby Clemmer

Title: President

This solicitation may be used by any other Government Agency. [✓] YES [ ] NO [ ] N/A

CS 25-303, Plumbing Equipment, Fixtures, and Supplies

Drug-Free Workplace Form

(Submittal Page)

The undersigned vendor in accordance with Florida Statue 287.087 hereby certifies that, (Name of the Business): BAR Environmental, Inc. does:

1. Publish a statement notifying employees that the unlawful manufacture, distribution, dispensing, possession or use of a controlled substance is prohibited in the workplace and specifying the actions that will be taken against employees for violations of such prohibition.
2. Inform employees about the dangers of drug abuse in the workplace, the business's policy of maintaining a drug-free workplace, any available drug counseling, rehabilitation programs, employee assistance programs and the penalties that may be imposed upon employees for drug abuse violations.
3. Give each employee engaged in providing the commodities or contractual services that are under this solicitation a copy of the statement specified in subsection (1).
4. In the statement specified in subsection (1), notify the employees that, as a condition of working on the commodities or contractual services that are under bid, the employee will abide by the terms of the statement and will notify the employer of any conviction of, plea of guilty or nolo contendere to, any violation of Chapter 1893 or of any controlled substance law of the United States or any state, for a violation occurring in the workplace no later than five (5) days after such conviction.
5. Impose a sanction on or require the satisfactory participation in a drug abuse assistance or rehabilitation program, if such is available in the employee's community, by any employee who is so convicted.
6. Make a good faith effort to continue to maintain a drug-free workplace through implementation of this section.

As the person authorized to sign the statement, I certify that this firm complies fully with the above requirements.

Vendor Signature: _____

Date: October 10, 2025

Insurance Requirements

The selected vendor, if any, shall maintain, on a primary basis and at its sole expense, the following insurance coverages, with the limits and endorsements described in this section.

Commercial General Liability: Not less than $1,000,000 combined single limit of liability for bodily injuries, death, property damage, and personal injury resulting from any one occurrence, including coverage for Product/Completed Operations, Contractual Liability and Cross Liability. Coverage shall not contain any endorsement(s) excluding nor limiting Product/Completed Operations, Contractual Liability or Cross Liability coverage.

The selected vendor, if any, shall maintain, at all times, in full force during the contract period the insurance as specified with an insurer licensed to do business in the State of Florida; rated "A VIII" or better by A.M. Best Rating Company for Class VIII financial size category. Polk County, a political subdivision of the State of Florida, must be named as an additional insured with respect to liability arising from all work being performed for Polk County for General Liability policy of insurance.

The certificate holder must be **Polk County, a political subdivision of the State of Florida, 330 W Church St, Rm 150, Bartow, Florida 33830**. All policies shall contain a waiver of subrogation in favor of Polk County.

Certificates of Insurance for policies requiring additional insured status and/or the waiver of subrogation must include notations that these requirements apply. In addition, the Vendor shall supply to the County copies of the endorsements to verify these requirements.

The Vendor must provide, or cause to be provided, the County with 30 days' prior written notice regarding the cancellation, suspension, or non-renewal of or material change to any policy.

All Certificates of Insurance must be submitted on ACORD 25 forms.

The Vendor must submit updated Certificates of Insurance to the County upon the expiration of or material change to any policy.

Failure to provide an updated Certificate of Insurance upon expiration or cancellation will cause the Vendor's name to be removed from the QVL. Should the vendor provide an updated or new certificate of insurance meeting the above requirements, the vendor's name will be placed on the QVL again.

Insurance

(Submittal Page)

By signing below, the Vendor is stating that they fully understand the insurance requirements for this solicitation and if placed on the QVL of the continuing solicitation will provide all insurance coverage as required in this solicitation.

The requirements are as follows:

- Vendor is insured with a company licensed to do business in the State of Florida
- The insurance company is rated A VIII or better by A.M. Best Rating Company (General policy)
- Polk County will be named as an additional insured for commercial General liability.
- The General Liability policy will contain a waiver of subrogation in favor of Polk County

Company Name: BAR Environmental, Inc.

Vendor Signature: [signature]

Affidavit Certification Immigration Laws

POLK COUNTY WILL NOT INTENTIONALLY AWARD COUNTY CONTRACTS TO ANY VENDOR WHO KNOWINGLY EMPLOYS UNAUTHORIZED ALIEN WORKERS, CONSTITUTING A VIOLATION OF THE EMPLOYMENT PROVISIONS CONTAINED IN 8 U.S.C. SECTION 1324 A(E) {SECTION 274A(E) OF THE IMMIGRATION AND NATIONALITY ACT ("INA")}.

POLK COUNTY MAY CONSIDER THE EMPLOYMENT BY ANY VENDOR OF UNAUTHORIZED ALIENS A VIOLATION OF SECTION 274A(E) OF THE INA. **SUCH VIOLATION OF THE RECIPIENT OF THE EMPLOYMENT PROVISIONS CONTAINED IN 274A(E) OF THE INA SHALL BE GROUNDS FOR UNILATERAL CANCELLATION OF THE CONTRACT BY POLK COUNTY.**

VENDOR ATTEST THAT THEY ARE FULLY COMPLIANT WITH ALL APPLICABLE IMMIGRATION LAWS (SPECIFICALLY TO THE 1986 IMMIGRATION ACT AND SUBSEQUENT AMENDMENTS).

Company Name: BAR Environmental, Inc.

Signature: [signature]

Title: President

Date: October 10, 2025

State of: Tennessee

County of: Williamson

The foregoing instrument was acknowledged before me by means of ☑ physical presence or ☐ online notarization, this 10th day of October, 2025, by Will Trussell (*name*) as Project Manager (*title of officer*) of BAR Environmental (*entity name*), on behalf of the company, who ☑ is personally known to me or ☐ has produced _____ as identification.

Notary Public Signature: [signature]

Printed Name of Notary Public: Joseph Schmits

Notary Commission Number and Expiration: May 8, 2029

(AFFIX NOTARY SEAL)

Joseph Schmits
STATE OF TENNESSEE NOTARY PUBLIC
Davidson COUNTY

EMPLOYMENT ELIGIBILITY VERIFICATION (E-VERIFY) CERTIFICATION

(Florida Statutes, Section 448.095)

PROJECT NAME: CS 25-303, Plumbing Equipment, Fixtures, and Supplies

The undersigned, as an authorized officer of the contractor identified below (the "**Vendor**"), having full knowledge of the statements contained herein, hereby certifies to Polk County, a political subdivision of the State of Florida (the "**County**"), by and on behalf of the Vendor in accordance with the requirements of Section 448.095, Florida Statutes, as related to the contract entered into by and between the Vendor and the County on or about the date hereof, whereby the Vendor will provide labor, supplies, or services to the County in exchange for salary, wages, or other remuneration (the "**Contract**"), as follows:

1. Unless otherwise defined herein, terms used in this Certification which are defined in Section 448.095, Florida Statutes, as may be amended from time to time, shall have the meaning ascribed in said statute.

2. Pursuant to Section 448.095(5), Florida Statutes, the Vendor, and any subcontractor under the Contract, must register with and use the E-Verify system to verify the work authorization status of all new employees of the Vendor or subcontractor. The Vendor acknowledges and agrees that (i) the County and the Vendor may not enter into the Contract, and the Vendor may not enter into any subcontracts thereunder, unless each party to the Contract, and each party to any subcontracts thereunder, registers with and uses the E-Verify system; and (ii) use of the U.S. Department of Homeland Security's E-Verify System and compliance with all other terms of this Certification and Section 448.095, Fla. Stat., is an express condition of the Contract, and the County may treat a failure to comply as a material breach of the Contract.

3. By entering into the Contract, the Vendor becomes obligated to comply with the provisions of Section 448.095, Fla. Stat., "Employment Eligibility," as amended from time to time. This includes but is not limited to utilization of the E-Verify System to verify the work authorization status of all newly hired employees, and requiring all subcontractors to provide an affidavit attesting that the subcontractor does not employ, contract with, or subcontract with, an unauthorized alien. The Vendor shall maintain a copy of such affidavit for the duration of the Contract. Failure to comply will lead to termination of the Contract, or if a subcontractor knowingly violates the statute or Section 448.09(1), Fla. Stat., the subcontract must be terminated immediately. If the Contract is terminated pursuant to Section 448.095, Fla. Stat., such termination is not a breach of contract and may not be considered as such. Any challenge to termination under this provision must be filed in the Tenth Judicial Circuit Court of Florida no later than 20 calendar days after the date of termination. If the Contract is terminated for a violation of Section 448.095, Fla. Stat., by the Vendor, the Vendor may not be awarded a public contract for a period of 1 year after the date of termination. The Contractor shall be liable for any additional costs incurred by the County as a result of the termination of the Contract. Nothing in this Certification shall be construed to allow intentional discrimination of any class protected by law.

Executed this 10th day of October, 2025.

ATTEST:

By: _____

PRINTED NAME: _____

Its: _____

VENDOR:

By: _____

PRINTED NAME: Bobby Hamner

Its: President

Piggyback Contract; City of Sanford/PBA 25/26-215
(Polk County CS #25-303);
Plumbing Equipment, Fixtures, and Supplies

The City of Sanford, Florida, a Florida municipal limited liability company (Hereinafter referred to as the "City") enters this "Piggyback" Contract (hereinafter referred to as the "Contract") with Bar Environmental, Inc., a Tennessee corporation, whose principal and mailing address is: 100 Winner's Circle North, Ste, 420, Brentwood, Tennessee, 37027 (hereinafter referred to as "Bar Environmental"), under the terms and conditions hereinafter provided. The City and Bar Environmental may be collectively referenced herein as the "Parties."

The City and Bar Environmental agree as follows:

1. The Purchasing Policy for the City of Sanford allows for "piggybacking" contracts. Pursuant to this procedure, the City is allowed to piggyback an existing government contract, and there is no need to obtain formal or informal quotations, proposals or bids. The Parties agree that Bar Environmental has entered into a contract with Polk County. The piggybacked agreement to which this Contract relates is Contract Solicitation No. 25-303 relating to "Plumbing Equipment, Fixtures, and Supplies" (the terms and conditions under which the award was made) the subject of which solicitation provides the City access to purchase various Plumbing Equipment, Fixtures, and Supplies and Services. The original Polk County contract documents being referred to herein as the "Original Government Contract".

2. The Original Government Contract is incorporated herein by reference and is attached as Exhibit "A" to this Contract. All of the terms and conditions set out in the Original Government Contract are fully binding on the Parties and said terms

and conditions are incorporated herein; provided, however, that the City will negotiate and enter work orders/purchase orders with Bar Environmental in accordance with City policies and procedures for particular goods and services within the scope of the Document and Plumbing Equipment, Fixtures, and Supplies goods and services. All pricing shall be F.O.B., City Hall, City of Sanford, with most favored nation/customer pricing.

3. Notwithstanding the requirement that the Original Government Contract is fully binding on the Parties, the Parties have agreed to modify certain technical provisions of the Original Government Contract as applied to this Contract between Bar Environmental and the City, as follows:

a. Insurance Requirements of this Contract: Certificate(s) are to be provided by Bar Environmental naming City as additional insured or certificate holder for insurance coverage. Said coverage is required to be maintained by Bar Environmental in accordance with Exhibit “B” attached hereto.

b. For other provisions of the Original Government Contract that will be modified see the City’s website, which can be reached at: www.SanfordFL.gov with particular regard to when the Original Government Contract is silent as to a term or condition which matter needs to be clarified. The Parties shall also be bound by the purchasing policies and procedures of the City as well as the controlling provisions of Florida law. Work orders shall be used, in accordance therewith, in the implementation of this Contract to the extent deemed necessary by the City in its sole and absolute discretion.

c. Address change for the City: Notwithstanding the address and contact information for the government entity as set out in the original government contract, Bar Environmental agrees that it shall send notices, invoices and shall conduct all business with the City to the attention of City Manager, at: City of Sanford, 300 North Park Avenue; Sanford, Florida 32771. The City Manager’s designated representative for this Contract is:

Marisol Ordoñez
Purchasing Manager
City of Sanford Finance Department
Purchasing Division
300 North Park Avenue
Sanford, Florida 32771
Phone: 407.688.5000, extension 5028
Email Marisol.ordonez@sanfordfl.gov

d. Notwithstanding anything in the Original Government Contract to the contrary, the venue of any dispute will be in Seminole County, Florida. Litigation between the Parties arising out of this Contract shall be in Seminole County, Florida in the Court of appropriate jurisdiction. The laws of the State of Florida shall control any dispute between the Parties arising out of or related to this Contract, the performance thereof or any products or services delivered pursuant to such Contract.

e. Notwithstanding any other provision in the Original Government Contract to the contrary, there shall be no arbitration with respect to any dispute between the Parties arising out of this Contract. Dispute resolution shall be through voluntary and non-binding mediation, negotiation or litigation in the court of appropriate jurisdiction located in Seminole County, Florida, with the Parties bearing the costs of their own legal fees with respect to any dispute resolution, including litigation.

f. All the goods and services to be provided or performed shall be in conformance with commonly accepted industry and professional codes and standards, standards of the City, and the laws of any Federal, State or local regulatory agency.

g. Bar Environmental understands that Chapter 119, *Florida Statutes*, relating to public records shall be applicable to this Contract and acknowledges review of, and adherence to, the following disclosures from the City:

I. **IF THE CONTRACTOR/BAR ENVIRONMENTAL HAS QUESTIONS REGARDING APPLICATION OF CHAPTER 119, *FLORIDA STATUTES*, TO THE CONTRACTOR'S (BAR ENVIRONMENTAL'S) DUTY TO PROVIDE PUBLIC RECORDS RELATING TO THIS CONTRACT, CONTACT THE CUSTODIAN OF PUBLIC RECORDS AT (407) 688-5012, TRACI HOUCHIN, MMC, FCRM, CITY**

CLERK, CITY OF SANFORD, CITY HALL, 300 NORTH PARK AVENUE, SANFORD, FLORIDA 32771, TRACI.HOUCHIN@SANFORDFL.GOV.

II. In order to comply with Section 119.0701, *Florida Statutes*, public records laws, Bar Environmental must:

A. Keep and maintain public records that ordinarily and necessarily would be required by the City in order to perform the service.

‘’

B. Provide the public with access to public records on the same terms and conditions that the City would provide the records and at a cost that does not exceed the cost provided in Chapter 119, *Florida Statutes*, or as otherwise provided by law.

C. Ensure that public records that are exempt or confidential and exempt from public records disclosure requirements are not disclosed except as authorized by law.

D. Meet all requirements for retaining public records and transfer, at no cost, to the City all public records in possession of Bar Environmental upon termination of the contract and destroy any duplicate public records that are exempt or confidential and exempt from public records disclosure requirements. All records stored electronically must be provided to the City in a format that is compatible with the information technology systems of the City.

III. If Bar Environmental does not comply with a public records request, the City shall enforce the contract provisions in accordance with this Contract.

IV. Failure by Bar Environmental to grant such public access and comply with public records requests shall be grounds for immediate unilateral cancellation of this Contract by the City. Bar Environmental shall promptly provide the City with a copy of any request to inspect or copy public records in possession of Bar Environmental and shall promptly provide the City with a copy of Bar Environmental’s response to each such request.

h. Bar Environmental, in the event of any ambiguity in the contractual relationship between Bar Environmental and the City, shall comply with all "Standard Contractual Terms and Conditions," as provided on the City's website, which website can be reached and accessed, as well as said terms and conditions reviewed, at: www.SanfordFL.gov.

i. All other provisions in the Original Government Contract are fully binding on the Parties and will represent the agreement between the City and Bar Environmental.

4. This Contract shall be effective as of the date of execution of this Contract by, or on behalf of, the City.

SIGNATURE PAGE FOLLOWS:

Attest:
BAR ENVIRONMENTAL, INC., A Tennessee Corporation

By: _____

Its: President

Date: 11-4-25

Attest: Patrick Sauder, CFO

CITY OF SANFORD, a Florida municipal corporation.

By: Traci Houchin
Traci Houchin (Nov 13, 2025 11:23:19 EST)
Traci Houchin, MMC, FCRM
City Clerk

By: _____
Art Woodruff (Nov 12, 2025 12:47:33 EST)
Art Woodruff
Mayor
Date: 12/11/2025

Approved as to form and legal sufficiency.

By: Lindsay N. Greene
Lindsay N. Greene (Nov 11, 2025 21:23:49 EST)
Lindsay N. Greene
City Attorney

Exhibit "A"

[Attach original government contract]

EXHIBIT “B”

INSURANCE REQUIREMENTS

CONTINUING SOLICITATION FOR COMMODITIES

CS #25-303, PLUMBING EQUIPMENT, FIXTURES, AND SUPPLIES

INTRODUCTION:

Polk County, a political subdivision of the State of Florida, is seeking Submittals from vendors interested in providing plumbing equipment, fixtures, instrumentation, and supplies for a set discount. The commodities ("Goods") requested include, but are not limited to, piping, filters, sensors, controllers, valves, pumps, and other instrumentation needed to assist with water, wastewater, and reclaimed water utilities operations as well as other divisions' plumbing supply needs.

All responsive, responsible Vendors whose Submittal meets the minimum qualifications and have provided all the forms/documentation required of this solicitation, will be placed on a Qualified Vendor List (QVL) to provide the goods.

Vendors shall provide Polk County a **10% discount** off the current list price. List price means the vendor's current pricing. Current pricing is the vendor's current price for an item, whether it is on sale or not. Example: Invoices must show at a minimum either original price, plus a 10% discount, or the sale price, plus a 10% discount. The percent discount can be shown by individual item being purchased or 10% off the total order.

QUESTIONS: Questions regarding this solicitation should be directed to Ari Goldstein, Sr. Procurement Analyst at arigoldstein@polk-county.net.

QUALIFICATIONS

1. Vendor must have been in business under the same FEIN/TIN number for the past two (2) years. Evidence should be submitted with the submittal.
2. Vendors must possess a Polk County Local Business Tax Receipt (f/k/a Business License) to do business with the County. A copy of such license must be provided to the Procurement Division before award is made to the vendor.
3. Provide a primary and secondary Vendor point of contact for this solicitation to include:
    - Contact Name
    - Phone Number
    - Email Address

The Contact persons provided will be the primary and secondary contact for the County to call/communicate with during the term of the solicitation. If at any time this information changes it will be the vendors sole responsibility to update Procurement Division staff as soon as possible.

All documentation and information requested in the Qualifications section should be included with the vendor's submittal or must be provided prior to being placed on the QVL.

SPECIFICATIONS

1. All products will be shipped Free on Board (FOB) Destination.

WHEN GOODS ARE NEEDED

Divisions will try and share the amount of purchases between vendors that have been placed on the QVL, yet precedence will be for employees in the field to choose a vendor that is closest in proximity to assist with an efficient use of the employees' time. When the County contacts a vendor and does not get a response within a reasonable period, the County reserves the right to call the next vendor on the QVL, and so on.

County employees working in the field may purchase the goods from a vendor on the QVL that is closest to them at the time the goods are needed. When an employee makes purchases in person, the vendor should ensure they show their Polk County employee badge to prove employment with the county and that they use their Polk County purchasing card. The vendor is responsible for ensuring that the name on the badge matches the name on the purchasing card and verify that the picture of the employee on the County I.D. badge matches the person making the purchase. Vendors may require other valid I.D. methods from the employee in accordance with their procedures.

If purchasing items from the vendor via a purchase order, the vendor should provide an itemized quote/invoice to include a detailed description of each item and the list price for each item. A 10% discount is to be shown by individual item being purchased or a 10% discount off the total order.

SPECIAL CONDITIONS

1. The period of performance for this solicitation is through March 31, 2030 ("Termination Date"). Unless a Vendor is otherwise terminated in accordance with General Information Item #11. If the County provides notice to the Vendor at least 30 days prior to the Termination Date that it has not put in place a new solicitation for the goods, then this Solicitation shall remain in effect on a month-to-month basis until terminated by written notice from the County Procurement Division to the Vendor, but not longer than four (4) months following the termination date.

2. Vendor should provide a detailed invoice/receipt within 30 days of delivery of the goods, or immediately upon an employee using their County purchasing card.
   a. Each invoice or receipt should include:
      - Purchase order number, if applicable
      - A detailed description of the good(s) provided to include the vendor's current retail price for item, whether it is on sale or not, plus a 10% discount.

        Example: Invoices must show at a minimum either current retail price, plus a 10% discount, or the sale price, plus a 10% discount.
      - No sales tax is to be charged as the County is tax exempt
      - Shipping or freight must be F.O.B. destination and does not include a discount.
3. Vendors must register in our Vendor Database if you have not already done so prior to being placed on the QVL. A purchase order or credit card payment cannot be issued to a vendor until they have registered. You may register by going to the following link: https://www.polk-county.net/business/procurement/vendor-information/.
4. Any amendments to this solicitation, which includes an increase/decrease in pricing, additions, deletions, or modifications will require the Procurement Director's (or designee) approval. All vendors will be required to acknowledge and approve all amendments to remain on the QVL.

DISCOUNT/RATE

10% discount off the current list price or sale price.

SUBMITTAL INFORMATION

By submitting the requirements of this Continuing Solicitation for Commodities, Vendor acknowledges and agrees to its acceptance of all General Terms and Conditions, any Specifications, Special Conditions, and Rates/Discount contained herein.

All requirements must be submitted for the Vendor to be evaluated by both the Procurement and Utilities Divisions. Notification regarding Award of the solicitation will be given to the Vendor by the Procurement Division, based upon evaluation of the submitted materials.

FORMS/OTHER DOCUMENTATION

Submittals should include the following:

- Evidence of FEIN/TIN number as required in the Qualifications.
- References as required in the Qualifications, if applicable.

- Vendor Point of Contact Information as required in the Qualifications.
- Copy of Polk County Local Business Tax Receipt
- Submittal Sheet/Signature Acknowledgement
- Drug-Free Workplace Form
- Insurance Certificate meeting requirements of solicitation
- Affidavit Certification Immigration Laws
- Employment Eligibility Verification (E-Verify) Certification

SUBMITTAL OF RESPONSES

Interested parties are invited to submit their responses to the Procurement Division via email to procurement@polk-county.net or mail/hand deliver to:

Polk County Procurement Division
330 West Church St., Room 150
Bartow, Florida 33830
(863) 534-6415
Attn: Ari Goldstein

Vendor Instructions and General Information

Vendor Instructions:

To ensure acceptance of the submittal, follow these instructions:

Solicitation Documents Must Be Delivered to The Procurement Division.

1. **Execution of Submittal**: Submittal must contain a signature of an authorized representative in the space provided on the Signature Acknowledgement form.
2. **County as Gatekeeper of Documents**: This document is issued by Polk County and as such shall be the sole distributor of all amendments (changes) to these documents. It is the responsibility of the vendor to determine issuance of documents directly with the Procurement Division. The County is not responsible for any solicitations issued through subscriber, publications, or other sources not connected with the County and the vendor should not rely on such sources for information regarding the solicitation.
3. **Taxes**: Vendors are responsible for the payment of any applicable taxes that are connected to the purchase of any materials or subcontractors used in the execution of the solicitation.
4. **Discounts**: Vendors may offer a cash discount for prompt payment.
5. **Mistakes**: Vendors are required to examine the specifications, delivery schedule, prices and all instructions pertaining to the requirements of this solicitation. Failure to do so will be at vendor's risk.
6. **Invoicing and Payment**: Vendor shall submit an invoice to the County at the prices contained herein. **An original invoice shall be submitted to the appropriate User Division.** The vendor shall include the solicitation number and/or the purchase order number on all invoices. By submitting an invoice, Vendor's Project Manager or any authorized officer is attesting to the correctness and accuracy of all charges. Invoices will be processed for payment when approved by the appropriate Division's Project Manager or designee. The County's payment of an invoice shall not constitute evidence of the County's acceptance of the Vendors performance of the Service or the County's acceptance of any work.
7. **Conflict of Interest**: All vendors must disclose, with their submittal, the name of any officer, director or agent who is also an employee of the County or any of their agencies. Furthermore, all vendors must disclose the name of any County employee who owns, directly or indirectly, any interest of any amount in the vendor's firms or any of their branches. Award of this solicitation shall be subject to the provisions of Chapter 112, Florida Statutes.
8. **Warranty**: Unless otherwise specified, the vendor agrees that the goods furnished under this solicitation shall be covered by the most favorable commercial warranty the vendor gives to any customer for comparable goods, and that the rights and remedies provided herein are in addition to and do not limit any rights afforded to the County by any other provision of this solicitation.

9. **Liability**: The vendor shall hold and save the County, its officers, agents and employees harmless from liability of any kind in the performance of this solicitation and against claims by third parties resulting from the supplier's breach of contract or the supplier's negligence.
10. **Patents and Royalties**: The vendor, without exception, shall indemnify and save harmless the County and its employees from liability of any nature or kind, including cost and expenses for, or on account of, any copyrighted, patented or non-patented invention, process or article manufactured or used in the performance of the solicitation, including its use by the County. If the vendor uses any design, device or material covered by letters, patent or copyright, it is mutually agreed and understood without exception that the solicitation prices shall include all royalties or cost arising from the use of such design, device or material in any way involved in the work.
11. **Indemnification**: Vendor, to the extent permitted by law, shall indemnify, defend (by counsel reasonably acceptable to County), protect and hold the County, and its officers, employees and agents, harmless from and against any and all, claims, actions, causes of action, liabilities, penalties, forfeitures, damages, losses, and expenses whatsoever (including, without limitation, attorneys' fees, costs, and expenses incurred during negotiation, through litigation and all appeals therefrom) including, without limitation, those pertaining to the death of or injury to any person, or damage to any property, arising out of or resulting from (i) the failure of Vendor to comply with applicable laws, rules or regulations, (ii) the breach by Vendor of its obligations under any Agreement with the County entered into pursuant to this solicitation, (iii) any claim for trademark, patent, or copyright infringement arising out of the scope of Vendor's performance or nonperformance of the Agreement, or (iv) the negligent acts, errors or omissions, or intentional or willful misconduct, of Vendor, its professional associates, subcontractors, agents, and employees; provided, however, that Vendor shall not be obligated to defend or indemnify the County with respect to any such claims or damages arising out of the County's sole negligence. The obligations imposed by this Section shall survive the expiration or earlier termination of the Agreement.
12. **Public Entity Crimes:** The Vendor declares and warrants that neither the Vendor nor any of the Vendor's affiliates, as that term is defined in Section 287.133, Florida Statutes, are subject to the restrictions in Section 287.133, Florida Statutes, regarding the commission of a public entity crime. If during the term of this Agreement, the Vendor or any affiliate is convicted of a public entity crime or is otherwise prohibited from performing work for or transacting business with the County pursuant to Section 287.133, Florida Statutes, then the Vendor shall be in material default of this Agreement, and in such case, the County shall have the rights and remedies as provided herein.
13. **Submittals:** All submittals must be completed and submitted either by mail or submitted electronically by email or fax. The submittal(s) shall be submitted on the forms provided by Polk County. All submittals are subject to the conditions herein; failure to comply will subject submittal to rejection.

14. **Prices, Terms and Payment**: Prices include all packing, handling, shipping charges and delivery to any point within Polk County. Discount time will be computed from the date of satisfactory delivery at place of acceptance.
15. **Safety Standards**: Unless otherwise stipulated in the solicitation, all manufactured items and fabricated assemblies shall comply with applicable requirements of Occupational Safety and Health Act (OSHA) and carry evidence of Underwriters Laboratories' Listings (UL).
16. **Packaging**: All containers shall be suitable for storage or shipment, and all prices should include standard commercial packaging.
17. **Meets Specifications**: It is understood and agreed that any item offered or shipped as a result of this solicitation shall be new current model unless otherwise specified in the specifications. The vendor represents that all equipment offered under this specification shall meet or exceed the minimum requirements specified. Vendor shall strictly adhere to delivery specifications.
18. **Silence of Specifications**: The apparent silence of this specification and any supplemental specifications to any details or the omission from same of any detailed description concerning any point shall be regarded as meaning that only the best commercial practices are to prevail and that only materials of first quality and correct type, size and design are to be used. All workmanship is to be first quality. All interpretations of these specifications shall be made upon the basis of this statement.
19. **Governmental Restrictions**: In the event that any governmental restrictions may be imposed which would necessitate alteration of the material, quality, workmanship or performance of the items offered on this solicitation prior to delivery, it shall be the responsibility of the supplier to notify the Procurement Division at once. Their letter shall indicate the specific regulation, which required an alteration. The County reserves the right to accept any such alteration, including any price adjustments, or to cancel the contract at no expense to the County.
20. **Toxic Substances: Notice of awarded vendor(s) to provide to Polk County toxic substances (As listed in Chapter 442, Appendix "G" of the FS) if applicable.**
    a. Chapter 442 of the FS states that manufacturers, importers or distributors of any toxic substance shall prepare and provide each direct purchaser of such toxic substance with Material Safety Data Sheet(s), herein referred to as MSDS, which to the best of the manufacturer's, importer's or distributor's knowledge, is current, accurate and complete based on information then reasonably available to the manufacturer, importer or distributor. Upon notification of a new or revised MSDS the manufacturer, importer or distributor, on a timely basis not to exceed three (3) months after notification, shall provide the County with the revised information as it becomes available to the manufacturer, importer or distributor.
    b. Failure to provide the MSDS, when applicable, shall be cause for rejection of submittal.

21. **Inspection, Acceptance and Title**: Inspection and acceptance will be at the designated facility unless otherwise indicated. Title and risk of loss or damage to all items shall be the responsibility of the contract supplier until accepted by the County, unless loss or damage results from negligence by the County.
22. **Samples**: Samples of items, when called for, must be furnished free of expense and may, upon request, be returned at the vendor's expense. Each individual sample must be labeled with vendor's name, manufacturer's brand name and number, solicitation number and item reference. Samples of awarded vendor's items may remain on file with Procurement for the term of the contract. Request for return of samples shall be accompanied by instructions, which include shipping authorization and name of carrier, and must be received within ninety (90) days after award. If instructions are not received within this time, the Procurement Division shall dispose of the samples.
23. **Code of Ethics**: If any vendor violates or is a party to a violation of the code of ethics of Polk County or the State of Florida, with respect to this solicitation, such vendor may be disqualified from performing the work described in this solicitation or from furnishing the goods or services for which the submittal is submitted and shall be further disqualified from submitting on any future solicitations for work, goods, or services for the County.

General Information

1. **Definitions**:
   - The term "County" means the Polk County, a political subdivision of the State of Florida, and its authorized designees, agents or employees.
   - The term "Contract" means this solicitation document, any and all Addenda or Amendment issued, and the Contractors submittal.
   - The term "Vendor", "Contractor" means the qualified vendor(s) who executes a contract with the County.
2. **Qualified vendor(s):** As the best interest of the County may require, the right is reserved to place vendors on the QVL; to reject all submittals or waive any minor irregularities or technicalities in submittals received. In determining a responsive and responsible vendor, the following may be considered:
   - Vendor's evaluation – quality of performance on previous projects.
   - The ability, capacity, equipment and skill of the vendor to fulfill the contract.
   - Whether or not the vendor can fulfill the contract within the time specified, without delay or interference.
   - The character, integrity, reputation, judgment, experience and efficiency of the vendor.
   - The previous and existing compliance by the vendor with laws and ordinances relating to the contract.

- The sufficiency of the financial resources to fulfill the contract to provide the goods and/or services.
- The quality, availability and adaptability of the suppliers or contractual services to the particular use required.
- The ability of the vendor to provide future maintenance and service, as required or needed.
- The number and scope of conditions attached to the solicitation.

3. **Effective Date:** The date of issuance of a Notice to Proceed by the County Procurement Division.
4. **Prohibition Against Considering Vendor Interests:** In accordance with Section 287.05701, Florida Statutes, the County may not (i) request documentation of or consider a Vendor's social, political, or ideological interests when determining if the Vendor is a responsible vendor; or (ii) give preference to a Vendor based on the Vendor's social, political, or ideological interests.
5. **Non-Conformance to Solicitation Conditions**: Goods not delivered as per delivery date in solicitation and purchase order may result in vendor being found in default, in which event any and all re-procurement costs may be charged against the defaulting vendor. This non-conformance to solicitation conditions may result in immediate cancellation of the purchase order.
6. **Assignment**: Any purchase order issued pursuant to this solicitation and the monies which may become due herein are not assignable except with the prior written approval of the Procurement Director or designee.
7. **Disputes**: In the event of any doubt or difference of opinion as to the methods provided herein, or the level of performance rendered, the decision of the user division director shall be final and binding on both parties.
8. **Facilities**: The County reserves the right to inspect the vendor's facilities at any time, with prior notice.
9. **Placing of Orders**: Being placed on the QVL does not constitute an order. Before any goods can be delivered, the vendor must receive written or oral notification in accordance with the practices of the User Division.
10. **Precedence**: Any requirement set forth in any section of the solicitation documents shall be binding as if called for by all sections. If there is a difference in the terms anywhere in this document, the most restrictive shall prevail.
11. **Termination/Suspension**: The County may terminate the Contract resulting from this Solicitation at any time, in whole or in part, in accordance with and subject to the following:
    a. The County may terminate the Contract for the County's convenience by delivering 30 days' prior written notice of termination to the Contractor.
    b. The County may terminate the Contract immediately if the User Division determines that the Contractor is in material default of its Contract obligations,

has notified the Contractor of such default by delivering a Vendor Complaint Form to the Contractor specifically describing the basis of the complaint and the conditions of the Contractor's default, and ten (10) days have passed since the Contractor's receipt of the Vendor Complaint Form without all defaults as described therein having been fully corrected. Notwithstanding anything to the contrary contained herein, the County may terminate the Contract immediately, without notice or any opportunity to cure, if the services rendered for the Contract cause or threaten endangerment to public health, safety or welfare.

c. Upon receipt of any termination notice as described above, the Contractor shall:
   - Immediately discontinue all work unless the County's notice directs otherwise, and
   - Deliver to the County any and all data, reports, summaries, and all other information and materials of any type or nature whatsoever, whether completed or in process, the Contractor may have accumulated or generated in the course of performing the work of the Contract.

d. In the event this Solicitation and/or the resulting Contract is terminated due to the Contractor's material default which is not cured within the allotted time period as described above, the Procurement Director may also suspend or debar the Contractor in accordance with the Suspension and Debarment Section of the County Procurement Procedures Manual. The rights and remedies of the County provided for in this Section are in addition and supplemental to any and all other rights and remedies provided by law or under the Solicitation and/or the resulting Contract.

12. **Annual Appropriations**: The vendor acknowledges that the County, during any fiscal year, shall not expend money, incur any liability, or enter into any agreement which, by its terms, involves the expenditure of money in excess of the amounts budgeted or the reduction of revenues for those budgeted agreements that may be available for expenditure during such fiscal year. Any agreement, verbal or written, made in violation of this subsection is null and void, and no money may be paid on such agreement. Nothing herein contained shall prevent the making of agreements for a period exceeding one year, but any agreement so made shall be executory only for the value of the services to be rendered or agreed to be paid for in succeeding fiscal years. Accordingly, the County's performance and obligation to pay under this agreement is contingent upon annual appropriation.

13. **Price Increases/Decreases, Additions, Deletions, or Revisions** to this Continuing Solicitation for Services, will be issued in the form of an Amendment by the Procurement Division and will be posted on the County's website. All vendors on the QVL will be notified via email and will be required to acknowledge the Amendment and their consent thereto. Any Vendor on the QVL that does not return a signed Acknowledgement of the acceptance of the amendment terms and conditions will be removed from the QVL until such acknowledgement is accepted.

14. **Uncontrollable Forces (Force Majeure)**: Either party hereunder may be temporarily excused from performance if an Event of Force Majeure directly or

indirectly causes its nonperformance. An "Event of Force Majeure" is defined as any event which results in the prevention or delay of performance by a party of its obligations under this Agreement and which is beyond the reasonable control of the nonperforming party. It includes, but is not limited to fire, flood, earthquakes, storms, lightning, epidemic, war, riot, civil disturbance, sabotage, and governmental actions. Neither party shall be excused from performance if non-performance is due to forces which are reasonably preventable, removable, or remediable and which the non-performing party could have, with the exercise of reasonable diligence, prevented, removed, or remedied prior to, during, or immediately after their occurrence. Within five (5) days after the occurrence of an Event of Force Majeure, the non-performing party shall deliver written notice to the other party describing the event in reasonably sufficient detail, along with proof of how the event has precluded the non-performing party from performing its obligations hereunder, and a good faith estimate as to the anticipated duration of the delay and the means and methods for correcting the delay. The non-performing party's obligations, so far as those obligations are affected by the Event of Force Majeure, shall be temporarily suspended during, but no longer than, the continuance of the Event of Force Majeure and for a reasonable time thereafter as may be required for the non-performing party to return to normal business operations. If excused from performing any obligations under this Agreement due to the occurrence of an Event of Force Majeure, the non-performing party shall promptly, diligently, and in good faith take all reasonable action required for it to be able to commence or resume performance of its obligations under this Agreement. During any such time period, the non-performing party shall keep the other party duly notified of all such actions required for it to be able to commence or resume performance of its obligations under this Agreement.

15. **Unauthorized Alien(s)**: The vendor agrees that unauthorized aliens shall not be employed nor utilized in the performance of the requirements of this solicitation. The County shall consider the employment or utilization of unauthorized aliens a violation of Section 274A(e) of the Immigration and Naturalization Act (8 U.S.C. 1324a). Such violation shall be cause for unilateral termination of this Agreement by the County. As part of the response to this solicitation, the qualified vendor will complete and submit the attached form "Affidavit Certification Immigration Laws."

16. **Employment Eligibility Verification (E-Verify)**

A. Unless otherwise defined herein, terms used in this Section which are defined in Section 448.095, Florida Statutes, as may be amended from time to time, shall have the meaning ascribed in said statute.

B. Pursuant to Section 448.095(5), Florida Statutes, the vendor hereto, and any subcontractor thereof, must register with and use the E-Verify system to verify the work authorization status of all new employees of the vendor or subcontractor. The vendor acknowledges and agrees that (i) the County and the vendor may not enter into this Agreement, and the vendor may not enter into any subcontracts hereunder, unless each party to this Agreement, and each party to any subcontracts hereunder, registers with and uses the E-Verify system; and (ii) use of the U.S. Department of Homeland Security's E-Verify

System and compliance with all other terms of this Certification and Section 448.095, Fla. Stat., is an express condition of this Agreement, and the County may treat a failure to comply as a material breach of this Agreement.

C. By entering into this Agreement, the vendor becomes obligated to comply with the provisions of Section 448.095, Fla. Stat., "Employment Eligibility," as amended from time to time. This includes but is not limited to utilization of the E-Verify System to verify the work authorization status of all newly hired employees, and requiring all subcontractors to provide an affidavit attesting that the subcontractor does not employ, contract with, or subcontract with, an unauthorized alien. The vendor shall maintain a copy of such affidavit for the duration of this Agreement. Failure to comply will lead to termination of this Agreement, or if a subcontractor knowingly violates the statute or Section 448.09(1), Fla. Stat., the subcontract must be terminated immediately. If this Agreement is terminated pursuant to Section 448.095, Fla. Stat., such termination is not a breach of contract and may not be considered as such. Any challenge to termination under this provision must be filed in the Tenth Judicial Circuit Court of Florida no later than 20 calendar days after the date of termination. If this Agreement is terminated for a violation of Section 448.095, Fla. Stat., by the vendor, the vendor may not be awarded a public contract for a period of 1 year after the date of termination. The vendor shall be liable for any additional costs incurred by the County as a result of the termination of this Agreement. Nothing in this Section shall be construed to allow intentional discrimination of any class protected by law.

17. **Attorney's Fees and Costs**: Each party shall be responsible for its own legal and attorney's fees, costs and expenses incurred in connection with any dispute or any litigation arising out of, or relating to this Agreement, including attorney's fees, costs and expenses incurred for any appellate or bankruptcy proceedings.

18. **Public Records Law**.

(a)The Vendor acknowledges the County's obligations under Article I, Section 24, of the Florida Constitution and under Chapter 119, Florida Statutes, to release public records to members of the public upon request and comply in the handling of the materials created under this Agreement. The Vendor further acknowledges that the constitutional and statutory provisions control over the terms of this Agreement. In association with its performance pursuant to this Agreement, the Vendor shall not release or otherwise disclose the content of any documents or information that is specifically exempt from disclosure pursuant to all applicable laws.

(b)Without in any manner limiting the generality of the foregoing, to the extent applicable, the Vendor acknowledges its obligations to comply with Section 119.0701, Florida Statutes, with regard to public records, and shall:

(i) keep and maintain public records required by the County to perform the services required under this Agreement;

(ii) upon request from the County's Custodian of Public Records or his/her designee, provide the County with a copy of the requested records or allow the

records to be inspected or copied within a reasonable time at a cost that does not exceed the cost provided in Chapter 119, Florida Statutes, or as otherwise provided by law;

(iii) ensure that public records that are exempt or confidential and exempt from public records disclosure requirements are not disclosed except as authorized by law for the duration of the term of this Agreement and following completion of this Agreement if the Vendor does not transfer the records to the County; and

(iv) upon completion of this Agreement, transfer, at no cost, to the County all public records in possession of the Vendor or keep and maintain public records required by the County to perform the service. If the Vendor transfers all public records to the County upon completion of this Agreement, the Vendor shall destroy any duplicate public records that are exempt or confidential and exempt from public records disclosure requirements. If the Vendor keeps and maintains public records upon completion of this Agreement, the Vendor shall meet all applicable requirements for retaining public records. All records stored electronically must be provided to the County, upon request from the County's Custodian of Public Records, in a format that is compatible with the information technology systems of the County.

(c) **IF THE VENDOR HAS QUESTIONS REGARDING THE APPLICATION OF CHAPTER 119, FLORIDA STATUTES, TO THE VENDOR'S DUTY TO PROVIDE PUBLIC RECORDS RELATING TO THIS AGREEMENT, CONTACT THE COUNTY'S CUSTODIAN OF PUBLIC RECORDS AT:**

RECORDS MANAGEMENT LIAISON OFFICER
POLK COUNTY
330 WEST CHURCH ST.
BARTOW, FL 33830
TELEPHONE: (863) 534-7527
EMAIL: RMLO@POLK-COUNTY.NET

19. **Scrutinized Companies and Business Operations Certification; Termination.**

A. Certification(s).

(i) By its execution of this Agreement, the Vendor hereby certifies to the County that the Vendor is not on the Scrutinized Companies that Boycott Israel List, created pursuant to Section 215.4725, Florida Statutes, nor is the Vendor engaged in a boycott of Israel, nor was the Vendor on such List or engaged in such a boycott at the time it submitted its bid, proposal, quote, or other form of offer, as applicable, to the County with respect to this Agreement.

(ii) Additionally, if the value of the goods or services acquired under this Agreement are greater than or equal to One Million Dollars ($1,000,000), then the Vendor further certifies to the County as follows:

(a) the Vendor is not on the Scrutinized Companies with Activities in Sudan List, created pursuant to Section 215.473, Florida Statutes; and

(b) the Vendor is not on the Scrutinized Companies with Activities in the Iran Petroleum Energy Sector List, created pursuant to Section 215.473, Florida Statutes; and

(c) the Vendor is not engaged in business operations (as that term is defined in Florida Statutes, Section 287.135) in Cuba or Syria; and

(d) the Vendor was not on any of the Lists referenced in this subsection A(ii), nor engaged in business operations in Cuba or Syria when it submitted its proposal to the County concerning the subject of this Agreement.

(iii) The Vendor hereby acknowledges that it is fully aware of the penalties that may be imposed upon the Vendor for submitting a false certification to the County regarding the foregoing matters.

B. Termination. In addition to any other termination rights stated herein, the County may immediately terminate this Agreement upon the occurrence of any of the following events:

(i) The Vendor is found to have submitted a false certification to the County with respect to any of the matters set forth in subsection A(i) above, or the Vendor is found to have been placed on the Scrutinized Companies that Boycott Israel List or is engaged in a boycott of Israel.

(ii) The Vendor is found to have submitted a false certification to the County with respect to any of the matters set forth in subsection A(ii) above, or the Vendor is found to have been placed on the Scrutinized Companies with Activities in Sudan List, or the Scrutinized Companies with Activities in the Iran Petroleum Energy Sector List, or has been engaged in business operations in Cuba or Syria, and the value of the goods or services acquired under this Agreement are greater than or equal to One Million Dollars ($1,000,000).

20. **No Construction Against Drafter**: The Parties acknowledge that this Agreement and all the terms and conditions contained herein have been fully reviewed and negotiated by the Parties. Accordingly, any rule of construction to the effect that ambiguities are to be resolved against the drafting party shall not apply in interpreting this Agreement.

CS 25-303, Plumbing Equipment, Fixtures, and Supplies

Signature Acknowledgement

(Submittal Page)

To Polk County, a Political Subdivision of the State of Florida

Date: October 10, 2025

I certify that this submittal is made without prior understanding, agreement or connection with any corporation, firm or person submitting a submittal for the same construction, service or material and is in all respects fair and without collusion or fraud. I agree to abide by all conditions of this solicitation and certify that I have read and understand the solicitation documents. I have completed and submitted all submittal forms, and I am authorized to sign this submittal for the vendor. In submitting a submittal to the County, the vendor offers and agrees that if the submittal is accepted, the vendor will convey, sell, assign or transfer to the County all rights, titles and interests in and to all causes of action it may now or hereafter acquire under the Anti-Trust Laws of the United States and the State of Florida for price fixing relating to the particular commodities or services purchased or acquired by the County. At the County's discretion, such assignment shall be made and become effective at the time the County tender's final payment to the vendor.

Vendor Name: BAR Environmental, Inc.

Mailing Address: 100 Winner's Circle N. Suite 420

City: Brentwood

State: Tennessee

Zip Code: 37027

(Area Code) Telephone Number: (615) 373-0788

Toll Free Number:

Email Address: bclemmer@barenviro.com

Authorized Signature:

Name: Bubby Clemmer

Title: President

This solicitation may be used by any other Government Agency. [✓] YES [ ] NO [ ] N/A

CS 25-303, Plumbing Equipment, Fixtures, and Supplies

Drug-Free Workplace Form

(Submittal Page)

The undersigned vendor in accordance with Florida Statue 287.087 hereby certifies that, (Name of the Business): BAR Environmental, Inc. does:

1. Publish a statement notifying employees that the unlawful manufacture, distribution, dispensing, possession or use of a controlled substance is prohibited in the workplace and specifying the actions that will be taken against employees for violations of such prohibition.
2. Inform employees about the dangers of drug abuse in the workplace, the business's policy of maintaining a drug-free workplace, any available drug counseling, rehabilitation programs, employee assistance programs and the penalties that may be imposed upon employees for drug abuse violations.
3. Give each employee engaged in providing the commodities or contractual services that are under this solicitation a copy of the statement specified in subsection (1).
4. In the statement specified in subsection (1), notify the employees that, as a condition of working on the commodities or contractual services that are under bid, the employee will abide by the terms of the statement and will notify the employer of any conviction of, plea of guilty or nolo contendere to, any violation of Chapter 1893 or of any controlled substance law of the United States or any state, for a violation occurring in the workplace no later than five (5) days after such conviction.
5. Impose a sanction on or require the satisfactory participation in a drug abuse assistance or rehabilitation program, if such is available in the employee's community, by any employee who is so convicted.
6. Make a good faith effort to continue to maintain a drug-free workplace through implementation of this section.

As the person authorized to sign the statement, I certify that this firm complies fully with the above requirements.

Vendor Signature: _____

Date: October 10, 2025

Insurance Requirements

The selected vendor, if any, shall maintain, on a primary basis and at its sole expense, the following insurance coverages, with the limits and endorsements described in this section.

Commercial General Liability: Not less than $1,000,000 combined single limit of liability for bodily injuries, death, property damage, and personal injury resulting from any one occurrence, including coverage for Product/Completed Operations, Contractual Liability and Cross Liability. Coverage shall not contain any endorsement(s) excluding nor limiting Product/Completed Operations, Contractual Liability or Cross Liability coverage.

The selected vendor, if any, shall maintain, at all times, in full force during the contract period the insurance as specified with an insurer licensed to do business in the State of Florida; rated "A VIII" or better by A.M. Best Rating Company for Class VIII financial size category. Polk County, a political subdivision of the State of Florida, must be named as an additional insured with respect to liability arising from all work being performed for Polk County for General Liability policy of insurance.

The certificate holder must be **Polk County, a political subdivision of the State of Florida, 330 W Church St, Rm 150, Bartow, Florida 33830**. All policies shall contain a waiver of subrogation in favor of Polk County.

Certificates of Insurance for policies requiring additional insured status and/or the waiver of subrogation must include notations that these requirements apply. In addition, the Vendor shall supply to the County copies of the endorsements to verify these requirements.

The Vendor must provide, or cause to be provided, the County with 30 days' prior written notice regarding the cancellation, suspension, or non-renewal of or material change to any policy.

All Certificates of Insurance must be submitted on ACORD 25 forms.

The Vendor must submit updated Certificates of Insurance to the County upon the expiration of or material change to any policy.

Failure to provide an updated Certificate of Insurance upon expiration or cancellation will cause the Vendor's name to be removed from the QVL. Should the vendor provide an updated or new certificate of insurance meeting the above requirements, the vendor's name will be placed on the QVL again.

Insurance

(Submittal Page)

By signing below, the Vendor is stating that they fully understand the insurance requirements for this solicitation and if placed on the QVL of the continuing solicitation will provide all insurance coverage as required in this solicitation.

The requirements are as follows:

- Vendor is insured with a company licensed to do business in the State of Florida
- The insurance company is rated A VIII or better by A.M. Best Rating Company (General policy)
- Polk County will be named as an additional insured for commercial General liability.
- The General Liability policy will contain a waiver of subrogation in favor of Polk County

Company Name: BAR Environmental, Inc.

Vendor Signature: [signature]

Affidavit Certification Immigration Laws

POLK COUNTY WILL NOT INTENTIONALLY AWARD COUNTY CONTRACTS TO ANY VENDOR WHO KNOWINGLY EMPLOYS UNAUTHORIZED ALIEN WORKERS, CONSTITUTING A VIOLATION OF THE EMPLOYMENT PROVISIONS CONTAINED IN 8 U.S.C. SECTION 1324 A(E) {SECTION 274A(E) OF THE IMMIGRATION AND NATIONALITY ACT ("INA")}.

POLK COUNTY MAY CONSIDER THE EMPLOYMENT BY ANY VENDOR OF UNAUTHORIZED ALIENS A VIOLATION OF SECTION 274A(E) OF THE INA. **SUCH VIOLATION OF THE RECIPIENT OF THE EMPLOYMENT PROVISIONS CONTAINED IN 274A(E) OF THE INA SHALL BE GROUNDS FOR UNILATERAL CANCELLATION OF THE CONTRACT BY POLK COUNTY.**

VENDOR ATTEST THAT THEY ARE FULLY COMPLIANT WITH ALL APPLICABLE IMMIGRATION LAWS (SPECIFICALLY TO THE 1986 IMMIGRATION ACT AND SUBSEQUENT AMENDMENTS).

Company Name: BAR Environmental, Inc.

Signature: [signature]

Title: President

Date: October 10, 2025

State of: Tennessee

County of: Williamson

The foregoing instrument was acknowledged before me by means of ☑ physical presence or ☐ online notarization, this 10th day of October, 2025, by Will Trussell (*name*) as Project Manager (*title of officer*) of BAR Environmental (*entity name*), on behalf of the company, who ☑ is personally known to me or ☐ has produced _____ as identification.

Notary Public Signature: [signature]

Printed Name of Notary Public: Joseph Schmits

Notary Commission Number and Expiration: May 8, 2029

(AFFIX NOTARY SEAL)

Joseph Schmits
STATE OF TENNESSEE NOTARY PUBLIC
Davidson COUNTY

EMPLOYMENT ELIGIBILITY VERIFICATION (E-VERIFY) CERTIFICATION

(Florida Statutes, Section 448.095)

PROJECT NAME: CS 25-303, Plumbing Equipment, Fixtures, and Supplies

The undersigned, as an authorized officer of the contractor identified below (the "**Vendor**"), having full knowledge of the statements contained herein, hereby certifies to Polk County, a political subdivision of the State of Florida (the "**County**"), by and on behalf of the Vendor in accordance with the requirements of Section 448.095, Florida Statutes, as related to the contract entered into by and between the Vendor and the County on or about the date hereof, whereby the Vendor will provide labor, supplies, or services to the County in exchange for salary, wages, or other remuneration (the "**Contract**"), as follows:

1. Unless otherwise defined herein, terms used in this Certification which are defined in Section 448.095, Florida Statutes, as may be amended from time to time, shall have the meaning ascribed in said statute.

2. Pursuant to Section 448.095(5), Florida Statutes, the Vendor, and any subcontractor under the Contract, must register with and use the E-Verify system to verify the work authorization status of all new employees of the Vendor or subcontractor. The Vendor acknowledges and agrees that (i) the County and the Vendor may not enter into the Contract, and the Vendor may not enter into any subcontracts thereunder, unless each party to the Contract, and each party to any subcontracts thereunder, registers with and uses the E-Verify system; and (ii) use of the U.S. Department of Homeland Security's E-Verify System and compliance with all other terms of this Certification and Section 448.095, Fla. Stat., is an express condition of the Contract, and the County may treat a failure to comply as a material breach of the Contract.

3. By entering into the Contract, the Vendor becomes obligated to comply with the provisions of Section 448.095, Fla. Stat., "Employment Eligibility," as amended from time to time. This includes but is not limited to utilization of the E-Verify System to verify the work authorization status of all newly hired employees, and requiring all subcontractors to provide an affidavit attesting that the subcontractor does not employ, contract with, or subcontract with, an unauthorized alien. The Vendor shall maintain a copy of such affidavit for the duration of the Contract. Failure to comply will lead to termination of the Contract, or if a subcontractor knowingly violates the statute or Section 448.09(1), Fla. Stat., the subcontract must be terminated immediately. If the Contract is terminated pursuant to Section 448.095, Fla. Stat., such termination is not a breach of contract and may not be considered as such. Any challenge to termination under this provision must be filed in the Tenth Judicial Circuit Court of Florida no later than 20 calendar days after the date of termination. If the Contract is terminated for a violation of Section 448.095, Fla. Stat., by the Vendor, the Vendor may not be awarded a public contract for a period of 1 year after the date of termination. The Contractor shall be liable for any additional costs incurred by the County as a result of the termination of the Contract. Nothing in this Certification shall be construed to allow intentional discrimination of any class protected by law.

Executed this 10th day of October, 2025.

ATTEST:

By: _____

PRINTED NAME: _____

Its: _____

VENDOR:

By: _____

PRINTED NAME: Bobby Hamner

Its: President

Florida's Crossroads of Opportunity

Board of County Commissioners

330 West Church Street
PO Box 9005 • Drawer AS05
Bartow, Florida 33831-9005

POLK COUNTY

PHONE: 863-534-6757
FAX: 863-534-6789
www.polk-county.net

PROCUREMENT DIVISION

October 20, 2025

Via Email Only
MJRMark@barenviro.com

Mark Young, Jr.
BAR Environmental, Inc.
100 Winner's Circle N, Suite 420
Brentwood, TN 37027

RE: CS 25-303, Plumbing Equipment, Fixtures and Supplies – Notice to Proceed

Dear Mark,

Your firm has met the qualifications and requirements for CS 25-303, Plumbing Equipment, Fixtures and Supplies.

As such, this letter serves as your firm's notice to proceed. However, please note that this Notice to Proceed is **contingent upon the County's receipt of a Certificate of Liability Insurance** that meets all insurance requirements specified in the solicitation. Your firm will not be placed on the Qualified Vendor List until the County has received and approved the required certificate.

Once the insurance documentation is received and verified, your firm **will be officially placed on the Qualified Vendor List**. You will then be contacted by the appropriate County Division when goods or services are needed in accordance with the solicitation.

The term of this Continuing Services Solicitation is through **March 31, 2030**, unless otherwise terminated in accordance with General Information Item # 11.

Sincerely,

Colin Burke
Procurement Analyst (Jr.)

cc: Ari Goldstein, Utilities Division
Jason Jennings, Utilities Division
Tamara Richardson, Utilities Division

CS File 25-303-N

PBA 25_26-215 - BAR Environmental

Final Audit Report 2025-11-13

Created:	2025-11-10
By:	Robert Rios (Robert.Rios@sanfordfl.gov)
Status:	Signed
Transaction ID:	CBJCHBCAABAAzx1K6p-UBY7QkwEIen_Ir_P8kr-LFESr

"PBA 25_26-215 - BAR Environmental" History

Document created by Robert Rios (Robert.Rios@sanfordfl.gov)
2025-11-10 - 12:11:36 PM GMT

Document emailed to lindsay.greene@sanfordfl.gov for signature
2025-11-10 - 12:11:59 PM GMT

Email viewed by lindsay.greene@sanfordfl.gov
2025-11-12 - 2:23:18 AM GMT

Signer lindsay.greene@sanfordfl.gov entered name at signing as Lindsay N. Greene
2025-11-12 - 2:23:47 AM GMT

Document e-signed by Lindsay N. Greene (lindsay.greene@sanfordfl.gov)
Signature Date: 2025-11-12 - 2:23:49 AM GMT - Time Source: server

Document emailed to art.woodruff@sanfordfl.gov for signature
2025-11-12 - 2:23:54 AM GMT

Email viewed by art.woodruff@sanfordfl.gov
2025-11-12 - 5:45:18 PM GMT

Signer art.woodruff@sanfordfl.gov entered name at signing as Art Woodruff
2025-11-12 - 5:47:31 PM GMT

Document e-signed by Art Woodruff (art.woodruff@sanfordfl.gov)
Signature Date: 2025-11-12 - 5:47:33 PM GMT - Time Source: server

Document emailed to Traci Houchin (traci.houchin@sanfordfl.gov) for signature
2025-11-12 - 5:47:38 PM GMT

Email viewed by Traci Houchin (traci.houchin@sanfordfl.gov)
2025-11-13 - 4:22:12 PM GMT

Document e-signed by Traci Houchin (traci.houchin@sanfordfl.gov)

Signature Date: 2025-11-13 - 4:23:19 PM GMT - Time Source: server

Agreement completed.

2025-11-13 - 4:23:19 PM GMT

Adobe Acrobat Sign

Riviera Beach - Utility Special District

To: Honorable Mayor, Chairperson and Utility Special District Board of Directors

From: Joshua Niemann, Utility Special District Executive Director

Through: William Wilkins, City Manager

Subject: **Resolution Number 72-26UD: A Resolution of the Board of Directors of the City of Riviera Beach Utility Special District, Palm Beach County, Florida, approving the purchase of one (1) John Deere 410P Backhoe Loader from Dobbs Equipment, LLC utilizing Florida Sheriffs Association Cooperative Purchasing Program Contract No. FSA26-EQU24.0, Equipment, in an amount not to exceed $187,252.25; authorizing the Utility Special District Finance Director to make payments from Account Number 41131101-564000 in an amount not to exceed $187,252.25; and providing an effective date.**

Date: November 23, 2026

CC: General Public

Background:

This purchase is critical to support the Utility Special District's day-to-day maintenance, construction, and emergency response operations while ensuring the continued reliability of water, wastewater, and utility infrastructure throughout the District. Through the use of the competitively awarded Florida Sheriffs Association Contract FSA26-EQU24.0, the District is able to procure one (1) John Deere 410P Backhoe Loader from Dobbs Equipment, satisfying competitive procurement requirements while obtaining equipment specifically designed for heavy-duty utility applications.

The John Deere 410P Backhoe Loader is a versatile multipurpose machine capable of performing excavation, trenching, material handling, pipe installation support, site restoration, and emergency utility repairs. The equipment combines powerful loader performance with

advanced backhoe capabilities, allowing District personnel to efficiently maintain and repair water distribution, wastewater collection, and utility infrastructure systems while reducing reliance on rented equipment and outside contractors. suited for the diverse operational demands encountered throughout the District's utility service area. Maintaining access to reliable heavy equipment is essential for minimizing service disruptions, improving operational efficiency, and supporting critical infrastructure maintenance activities.

City Goals:

The Citywide Goal is to Accelerate Operational Excellence.

Fiscal/Budget Impact:

$187,252.25

Recommendation:

Staff recommends a Motion to approve Resolution Number 72-26UD.

Attachments:

1. Resolution Number 72-26UD Dobbs.docx
2. Riviera Beach 27 410P Cab 1.31MP Cpl Front Forks and rear ext with 24 inch 10-20-26.doc
3. FSA26-EQU24.0-Equipment-Final-Award-Packet.pdf
4. JD 410P Backhoe Gen B 8-25.pdf
5. Loader_Backhoe_-_4x4_JD_310P_Stated_Options_2026.pdf
6. 234_Build_Sheet.pdf

Resolution Number 72-26UD

A Resolution of the Board of Directors of the City of Riviera Beach Utility Special District, Palm Beach County, Florida, approving the purchase of one (1) John Deere 410P Backhoe Loader from Dobbs Equipment, LLC utilizing Florida Sheriffs Association Cooperative Purchasing Program Contract No. FSA26-EQU24.0, Equipment, in an amount not to exceed $187,252.25; authorizing the Utility Special District Finance Director to make payments from Account Number 41131101-564000 in an amount not to exceed $187,252.25; and providing an effective date.

Whereas, the City of Riviera Beach Utility Special District ("District") requires one (1) John Deere 410P Backhoe Loader to support ongoing utility operations and maintenance activities throughout the District's service area; and

Whereas, Section 16.5-261 (Cooperative purchasing authorized) of the City of Riviera Beach Procurement Code authorizes the Procurement Department to participate in a cooperative purchasing agreement for the procurement of supplies, services, or construction with one or more public procurement units; and

Whereas, the Florida Sheriffs Association ("FSA"), through its Cooperative Purchasing Program, issued a competitive Invitation to Bid for equipment, advertised on March 30, 2026, and awarded Contract No. FSA26-EQU24.0, Equipment, for a term of October 1, 2026, through September 30, 2028; and

Whereas, Dobbs Equipment, LLC is an awarded vendor under FSA Contract No. FSA26-EQU24.0 for John Deere loader backhoe equipment, and the contract pricing and terms are available to Florida local governments; and

Whereas, funding for this purchase is available in Account Number 41131101-564000; and

Whereas, the Board of Directors finds that this purchase at established contract pricing under FSA Contract No. FSA26-EQU24.0 is in the best interest of the District and its customers.

Whereas, this Resolution shall take effect upon approval by the Utility Special District Board.

Now, Therefore, be it resolved by the City of Riviera Beach Utility Special District Board of Directors, Palm Beach County, Florida, as follows:

Section 1. The Board of Directors hereby approves the purchase of one (1) John Deere 410P Backhoe Loader from Dobbs Equipment, LLC, utilizing FSA Contract No. FSA26-EQU24.0, Equipment, in an amount not to exceed $187,252.25.

Section 2. The Utility Special District Finance Director is hereby authorized to make payments to Dobbs Equipment, LLC from Account Number 41131101-564000 in an amount not to exceed $187,252.25.

Section 3. This Resolution shall take effect immediately upon its passage and approval by the Board of Directors of the City of Riviera Beach Utility Special District.

Passed and Adopted this _____ day of _____, 2026.

APPROVED:

_____
Glen Spiritis, Ph.D
Chairperson

_____
Fercella Davis-Panier
Vice-Chairperson

ATTEST:

_____
Debrah Hall
Master Municipal Clerk
District Clerk

MOTIONED BY: _____

SECONDED BY: _____

B. GUYTON: ____

K. MILLER-ANDERSON: ____

S. LANIER: ____

G. SPIRITIS: ____

F. DAVIS-PANIER:

Reviewed as to Legal Sufficiency

_____
Dawn S. Wynn, District Attorney

Date: _____

DOBBS

EQUIPMENT

A John Deere Dealer

FLORIDA SHERIFFS ASSOCIATION
FLORIDA ASSOCIATION OF COUNTIES
2026-2027 Contract for Vehicles and Equipment
Contract Number FSA26-EQU24.0
Spec#234 4x4 Loader Backhoe

John Deere 410P Cab Ext Rear 24" Bkt front coupler with 1.32 MP Bucket and 60x60 fork set

October 20, 2026

Quote For: City of Riviera Beach

Base Unit:

One (1) Deere 310P Backhoe Loader, 4X4, Enclosed Cab w/ 24" Backhoe bucket with 5 teeth, Deere Two Lever Controls 1.30 Yd Loader Bucket, Standard Backhoe		$118,105.00

Stated Options From Contract:

JD410P	Upgrade to John Deere 410P 1.50 yd with joystick controls	23,970.00
BYT13521	4 Corner LED Beacon lights	1,009.00
Level 2 perf.	MFWD driveshaft Guard, HD Grille, Stabilizer and boom guard	2,147.00
7002-1	Add auxiliary hydraulics with 1 and two way flow(for thumb)	6,235.00
6752-1	Extendible Dipperstick(extend a hoe)	8,122.00
7041	Front Loader coupler 3rd function hydraulics and ride control	9,247.00
7856	1.31 Yard Front Multi Purpose(Clam) Bucket on front	10,992.00
AT308139	60X60 fork Set for front coupler	5,056.00

Non-Specified Options less 25% Discount from List:

0608 Cab LED Lights and Air Suspension Seat	2,506.00	
1210 Premium Radio Package-Bluetooth Capable	538.00	
BYT13706 Slow Moving Vehicle Emblem	115.00	
Total List Non-Specified Options	$3,159.00	
Less 25% Discount:	(789.75)	
Total Non-Specified Options		2,369.25
Total FSA 2026-2027 Price FOB Riviera Beach		**$187,252.25**

Made In The U.S.A.

Greg Dudek, Governmental Sales Manager
3933 Martin Luther King Jr. Blvd West Palm Beach, FL 33404
Phone (239) 470-0822 Fax (561) 848-7099

FSA Cooperative Purchasing Program



FSA26-EQU24.0: Equipment Contract Packet

PROTECTING, LEADING & UNITING SINCE 1893
FLORIDA SHERIFFS ASSOCIATION
2617 Mahan Drive
Tallahassee, Florida 32308
p: (850) 877-2165 f: (850) 878-8665
flsheriffs.org

NOTICE OF FINAL AWARD
CONTRACT FSA26-EQU24.0: Equipment

Date: October 1, 2026

To: All Prospective Bidders and Purchasers

From: Matt Dunagan, Executive Director
Sarrah Carroll, Deputy Executive Director of Administration
Megan Taber, Director of the Cooperative Purchasing Program

Re: Contract Number FSA26-EQU24.0 – Equipment: Contract Awards

We are pleased to announce that the Florida Sheriffs Association (FSA) has successfully completed its latest nationwide cooperative bid for equipment. This contract is in effect beginning October 1, 2026, through September 30, 2028.

This notification is for the Florida Sheriffs Association (FSA) Cooperative Purchasing Program (CPP) Notice of Final Award for contract FSA26-EQU24.0 Equipment. All bids were received promptly, reviewed, and evaluated by the FSA and its Fleet Advisory Committee.

The contract specifications include:

- All Terrain & Utility Vehicles: All Terrain Vehicles (Quad)
- All Terrain & Utility Vehicles: Electric Utility Vehicles (Side-by-Side)
- All Terrain & Utility Vehicles: Utility Vehicles (Side-by-Side)
- Blower: Ride On Blower*
- Bulldozer: 180hp
- Bulldozer: 70hp
- Bulldozer: 90hp
- Chipper: Brush Chipper
- Compactor: 80,000 lbs. Landfill Compactor
- Compressor: Air Compressor - Trailer Mounted
- Dump Truck: Articulating Off Road Dump Truck - 50,000 lbs. Payload
- Excavator: All Terrain Walking Excavator
- Excavator: Hydraulic Excavator - 15,590 lbs. Operating Weight
- Excavator: Hydraulic Excavator - 38,000 lbs. Operating Weight
- Excavator: Hydraulic Excavator - 76,550 lbs. Operating Weight

- Excavator: Mini Hydraulic Excavator - 7,105 lbs. Operating Weight
- Excavator: Telescopic Excavator - 45,000 lbs. Operating Weight - Tracked Type
- Excavator: Telescopic Excavator - 47,000 lbs. Operating Weight - 6x6 Wheeled Type
- Excavator: Vacuum Excavator - Trailer Mounted
- Excavator: Vacuum Excavator Body, Truck Mounted - 12 cubic yd.*
- Excavator: Wheeled Hydraulic Excavator - 42,000 lbs. Operating Weight
- Forklift: Cushion Tire - 4,000 lbs. Capacity
- Forklift: Rough Terrain Forklift - 5,000 lbs. Capacity
- Forklift: Telescopic Tool Carrier/Telehandler
- Generator: 125kW Stationary
- Generator: 150kW Mobile
- Generator: 500kW Mobile
- Generator: 500kW Stationary
- Generator: 60kW Stationary
- Horizontal Directional Drill
- Leaf Collector: Trailer Mounted
- Lift: Articulated Boom Lift - Self Propelled Tracked*
- Lift: Scissor Lift - Self Propelled
- Light Tower: Hybrid Light Tower
- Light Tower: Light Tower - Trailer Mounted
- Loader: Loader Backhoe - 4x4
- Loader: Mini Skid Steer - 1,000 lbs. Operating Capacity - Tracked Type, Stand Up Operator*
- Loader: Skid Steer - 1,850 lbs. Operating Capacity - Wheeled Type
- Loader: Skid Steer - 2,800 lbs. Operating Capacity - Wheeled Type
- Loader: Skid Steer - 3,100 lbs. Operating Capacity - Tracked Type
- Loader: Wheel Loader - 1.5 cubic yd.
- Loader: Wheel Loader - 3.0 cubic yd.
- Loader: Wheel Loader - 5.75 cubic yd.
- Low Speed Vehicle: Electric Type
- Motor Grader: Large
- Motor Grader: Small
- Mower: 15ft. Flex Wing Rotary Mower
- Mower: Remote Controlled Brush Mower
- Mower: Zero Turn Radius Mower
- Pallet Jack: Electric 4,500 lbs. Capacity
- Pipe Inspection: Battery Operated Pipe Crawler Inspection System
- Pipe Inspection: External Power Pipe Crawler Inspection System*
- Portable Signal: Portable Signal - Trailer Mounted*
- Pump: Mobile Pump
- Roadway Advisory Board: Message Board/Automatic License Plate Reader*
- Roadway Advisory Board: Mobile Message Board
- Roadway Advisory Board: Mobile Speed Board
- Roadway Advisory Board: Mobile Speed Board/Automatic License Plate Reader

- Roadway Advisory Board: Mobile Traffic Advisory/Directional Signal Board
- Roller: Compact 2,900 lbs. - Double Drum Roller - 38in. Width*
- Roller: Compact, Pneumatic Asphalt Roller*
- Roller: Compaction Roller 15,000 lbs. - Single Drum
- Roller: Large 22,000 lbs. - Double Drum Roller - 70in. Width
- Roller: Small 5,400 lbs. - Double Drum Roller - 47in. Width
- Security Camera: Security Camera Tower - Trailer Mounted*
- Sewer Cleaner: Combination Sewer Cleaning/Vacuum Machine Body - 10 cubic yd.
- Sewer Cleaner: Easement Machine*
- Sewer Cleaner: Trailer Mounted Sewer Cleaner
- Shop Tools & Equipment
- Shredder: Mobile Shredder/Grinder
- Simulator System: Equipment Operator Simulator*
- Solid Waste Material Handler: Wheeled Type
- Stump Cutter
- Sweeper: 3-Wheel Mechanical or Regenerative Air Sweeper
- Sweeper: Compact Air Sweeper - 2.3 cubic yd.
- Sweeper: Mechanical Broom Street Sweeper
- Sweeper: Regenerative Air Street Sweeper
- Sweeper: Self-Propelled Hydrostatic Broom
- Sweeper: Vacuum Street Sweeper*
- Sweeper: Walk Behind Floor Sweeper/Scrubber*
- Tactical Vehicle: Skid Steer Mounted (The Rook)
- Tool Carrier: Hydrostatic Drive
- Tractor: Agriculture Tractor - 4x2
- Tractor: Compact Articulating Tractor - AWD
- Tractor: Small Agriculture Tractor - 4x4
- Tractor: Tractor with Boom Mower - 4x4
- Trailer: Container Chassis Trailer - 73,900 lbs. GVWR*
- Trailer: Deck Over Equipment Trailer - 40,000 lbs. GVWR
- Trailer: Deck Over Flatbed Trailer - 14,000 lbs. GVWR
- Trailer: Detachable Neck Lowboy Trailer - 100,000 lbs. GVWR
- Trailer: Enclosed Cargo Trailer - 7,000 lbs. GVWR
- Trailer: Fixed Neck Lowboy Trailer - 70,000 lbs. GVWR
- Trailer: Flatbed Tilt Trailer - 40,000 lbs. GVWR*
- Trailer: Hydraulic Drop Deck Trailer - 13,500 lbs. GVWR
- Trailer: Hydraulic Tail Trailer - 70,000 lbs. GVWR
- Trailer: Leachate Tanker - 6,500 gallons
- Trailer: Livestock Trailer - 7,000 lbs. GVWR
- Trailer: Mobile Fuel Trailer - 460 gallons*
- Trailer: Multi Tank Fuel/Service 880 gallons Non-Hazmat - 14,000 lbs. GVWR*
- Trailer: Pothole Patch Unit - 12,000 lbs. GVWR*
- Trailer: Pressure/Vacuum Trailer - 6,000 gallons*

- Trailer: Pull Behind Dump Trailer - 14,000 lbs. GVWR
- Trailer: Refrigeration/Freezer Trailer - 7,000 lbs. GVWR
- Trailer: Restroom Trailer ADA Compliant*
- Trailer: Sludge Trailer - 80,000 lbs. GVWR*
- Trailer: Utility/Equipment Trailer - 7,000 lbs. GVWR
- Trailer: Waste Trailer with Walking Floor
- Transfer Switch: 600 Amp Automatic Transfer Switch
- Trencher: Tractor Type*
- Trencher: Walk Behind Trencher
- Underground Locating Equipment: Ground Penetrating Radar
- Underground Locating Equipment: Utility Locator
- Vehicle Lift: Above Ground - 2 Post Asymmetric Stationary Vehicle Lift 10k
- Vehicle Lift: Above Ground - 2 Post Symmetric Stationary Vehicle Lift 12k
- Vehicle Lift: Above Ground - 2 Post Symmetric Stationary Vehicle Lift 15k
- Vehicle Lift: Above Ground - 2 Post Symmetric Stationary Vehicle Lift 18k
- Vehicle Lift: Above Ground - 2 Post Versymmetric Stationary Vehicle Lift 10k
- Vehicle Lift: Above Ground - 4 Column, Alignment Lift with Front/Rear Jacks and Integrated Turntables and Slip Plates 14k
- Vehicle Lift: Above Ground - 4 Post Alignment Lift with Turnplates and Rolling Jack 30k*
- Vehicle Lift: Above Ground Drive On Platform Lift, Pantograph Type*
- Vehicle Lift: In Ground Drive On Platform Lift, Scissor Type*
- Vehicle Lift: Mobile - 2 Column, Cabled
- Vehicle Lift: Mobile - 2 Column, Wireless
- Vehicle Lift: Mobile - 4 Column, Cabled
- Vehicle Lift: Mobile - 4 Column, Wireless
- Vehicle Lift: Mobile - 6 Column, Cabled
- Vehicle Lift: Mobile - 6 Column, Wireless
- Vehicle Lift: Mobile - 8 Column, Wireless

**New Item Group*

The competitive process for this award began in March 2026, when the FSA Fleet Advisory Committee, bidders, and stakeholders provided input regarding procurement needs. Specifications were developed based on prior activity, and new additions were included based on feedback from the FSA Committee, bidders, and stakeholders.

Advertisements of the Invitation to Bid (ITB) were placed on the FSA website on March 30, 2026, and within the Florida Administrative Register on March 30, 2026, and April 27, 2026.

From the ITB, 117 bidders completed the pre-bid process or submitted required FSA waivers. Of these respondents, 83 submitted bids. Seventy-one responsive bidders were awarded after bids were evaluated by the FSA Fleet Advisory Committee and FSA staff.

The Florida Sheriffs Association Cooperative Purchasing Program has followed the Contract Terms and Conditions to procure this contract.

Contract prices are extended and guaranteed to any local government or political subdivision of the state, public educational institutions, other public agencies or authorities with the State of Florida, and other entities approved by the manufacturer to participate in this contract.

Out-of-state sales are permitted under this contract. All purchasers are bound by their local governing purchasing ordinances, rules, and regulations.

All awarded vendors are governed by their manufacturer agreements and the Contract Terms and Conditions.

List of Intended Awards in Alphabetical Order:

1. ACF Industrial Energy
2. Alamo Group Ag Americas LLC
3. Alamo Group Municipal Mowing Solutions LLC
4. All Traffic Solutions, LLC (A TAPCO Brand)
5. Alta Construction Equipment Florida, LLC
6. American Signal Company
7. Ameri-Recreational Sports, LLC
8. Aramsco Inc
9. ARI Phoenix, Inc.
10. ARIENS COMPANY
11. BASIC Equipment
12. BBA Pumps, Inc.
13. Container Systems & Equipment Co., Inc.
14. Cowin Equipment Company
15. Creel Tractor Company
16. Croc Enterprises LLC
17. DELAND MOTORSPORTS
18. DeLand Truck Center, Inc.
19. Dobbs Equipment, LLC
20. Doosan Bobcat North America, Inc.
21. Emergency Standby Power, LLC
22. Environmental Products Group
23. Everglades Equipment Group
24. Evervac Equipment
25. Federal Contracts LLC DBA Federal Contracts Company
26. Florida Coast Equipment, Inc.
27. GenServe LLC
28. GREAT SOUTHERN EQUIPMENT, LLC
29. Green Thumb Palm Beach
30. HD CONSTRUCTION EQUIPMENT DEVELON NORTH AMERICA LLC

31. Humdinger Equipment, Ltd.
32. Innovative Equipment Services 2 LLC CASE Power & Equipment of Florida
33. Jet-Vac Equipment Company, LLC
34. JOBBERS EQUIPMENT WAREHOUSE INC
35. K&K Systems, Inc.
36. Kelly Tractor Co
37. KJF Equipment Services LLC
38. Kustom Signals, Inc.
39. Love Power Equipment, Inc
40. McKibben Powersports Inc.
41. Menzi Muck USA, Inc.
42. Mersino Dewatering LLC
43. MID-FLORIDA DIESEL INC
44. MowerMax Equipment Co.
45. MWI Corporation
46. National Equipment Dealers, LLC
47. National Lift Truck Service
48. Nationwide Haul LLC
49. OCALA TRACTOR, LCC
50. OMJC Signal Inc
51. Opifex-Synergy
52. Pantropic Power
53. Pat`s Pump & Blower
54. Rechtien International Trucks
55. RIGHT TRAILERS, INC.
56. Ring Power Corporation
57. Segway of Central Florida
58. Southern Sewer Equipment Sales
59. Southern States ToyotaLift
60. Sunbelt Waste Equipment LLC
61. Taylor Power Systems, Inc.
62. Texas Trailers Sales and Service
63. Texas Underground
64. Thompson Pump & Manufacturing Company Inc.
65. Tom Evans Environmental, Inc.
66. Tradewinds Power Corp.
67. TRAVIS BODY & TRAILER INC
68. Vermeer Southeast Sales
69. Vetted Security Solutions
70. WARREN EQUIPMENT, INC
71. Xylem Dewatering Solutions, Inc.

The final award page document for all awarded bid items is attached.

FSA Cooperative Purchasing Program

FSA26-EQU24.0: Equipment
Awarded Vendor Contract Signature Pages

Docusign Envelope ID: 44808330-36FF-8E9E-801D-2D591BF3953C

CONTRACT SIGNATURE FORM

By submitting a response to this Invitation to Bid and signing this form, the Bidder declares that he or she has read, and the company understands, accepts and will comply with the terms, conditions and specifications of this bid and any addenda issued. The failure or omission to review this document shall in no way relieve the authorized agent of obligations with respect to this bid. The submission of a bid and signature below shall be taken as evidence of acceptance of the terms and conditions of this bid.

The Bidder further declares that no other persons other than the authorized agent herein named has any interest in this bid or in the contract to be taken, and that it is made without any connection with any other person or persons making proposal for the same article, and is in all respects fair and without collusion or fraud.

The Bidder further declares that they have carefully examined the specifications and is thoroughly familiar with its provisions and with the quality, type and grade of materials required.

The Bidder further declares that they have provided a discount on all factory options included in this bid, and such discount will be included in all purchase orders.

The Bidder further declares that the company understands the financial responsibility associated with this bid as stated and further declares that it has the ability to meet the financial responsibility associated with this bid.

The Bidder further declares that the company will furnish the items awarded for the price bid.

FSA Contract Number: FSA26-EQU24.0 Equipment

Bidder Company Name: ACF Industrial Energy

Business Address: 9311 Solar Drive, Tampa, FL 33619

Name of Authorized Agent: David A. Voelker

Email address of authorized agent: d.voelker@ACFPower.com

Signature: Signed by: 01E2DF0EFBE84AC...

Date: 9/24/2026

Docusign Envelope ID: 61808C7E-AFF6-8740-828B-58FEB772D365

CONTRACT SIGNATURE FORM

By submitting a response to this Invitation to Bid and signing this form, the Bidder declares that he or she has read, and the company understands, accepts and will comply with the terms, conditions and specifications of this bid and any addenda issued. The failure or omission to review this document shall in no way relieve the authorized agent of obligations with respect to this bid. The submission of a bid and signature below shall be taken as evidence of acceptance of the terms and conditions of this bid.

The Bidder further declares that no other persons other than the authorized agent herein named has any interest in this bid or in the contract to be taken, and that it is made without any connection with any other person or persons making proposal for the same article, and is in all respects fair and without collusion or fraud.

The Bidder further declares that they have carefully examined the specifications and is thoroughly familiar with its provisions and with the quality, type and grade of materials required.

The Bidder further declares that they have provided a discount on all factory options included in this bid, and such discount will be included in all purchase orders.

The Bidder further declares that the company understands the financial responsibility associated with this bid as stated and further declares that it has the ability to meet the financial responsibility associated with this bid.

The Bidder further declares that the company will furnish the items awarded for the price bid.

FSA Contract Number: FSA26-EQU24.0 Equipment

Bidder Company Name: Alamo Group Ag Americas LLC

Business Address: 2501 Griffin Avenue, Selma, AL 36703

Name of Authorized Agent: Marc Ivey

Email address of authorized agent: marc.ivey@alamo-group.com

Signature: DocuSigned by: 0B2E625F3BAD413...

Date: 9/29/2026

Docusign Envelope ID: 78EFCC6B-DCEC-877D-83B1-DEBBD2AFB282

CONTRACT SIGNATURE FORM

By submitting a response to this Invitation to Bid and signing this form, the Bidder declares that he or she has read, and the company understands, accepts and will comply with the terms, conditions and specifications of this bid and any addenda issued. The failure or omission to review this document shall in no way relieve the authorized agent of obligations with respect to this bid. The submission of a bid and signature below shall be taken as evidence of acceptance of the terms and conditions of this bid.

The Bidder further declares that no other persons other than the authorized agent herein named has any interest in this bid or in the contract to be taken, and that it is made without any connection with any other person or persons making proposal for the same article, and is in all respects fair and without collusion or fraud.

The Bidder further declares that they have carefully examined the specifications and is thoroughly familiar with its provisions and with the quality, type and grade of materials required.

The Bidder further declares that they have provided a discount on all factory options included in this bid, and such discount will be included in all purchase orders.

The Bidder further declares that the company understands the financial responsibility associated with this bid as stated and further declares that it has the ability to meet the financial responsibility associated with this bid.

The Bidder further declares that the company will furnish the items awarded for the price bid.

FSA Contract Number: FSA26-EQU24.0 Equipment

Bidder Company Name: Alamo Group Municipal Mowing Solutions LLC

Business Address: 1627 E. Walnut St., Seguin, TX 78155

Name of Authorized Agent: Coryelle Smith

Email address of authorized agent: bids@alamo-group.com

Signature: Signed by: Coryelle Smith ACAA9E5581274E8...

Date: 9/23/2026

Docusign Envelope ID: 3C894A56-9713-89CD-8341-9654970CF0E6

CONTRACT SIGNATURE FORM

By submitting a response to this Invitation to Bid and signing this form, the Bidder declares that he or she has read, and the company understands, accepts and will comply with the terms, conditions and specifications of this bid and any addenda issued. The failure or omission to review this document shall in no way relieve the authorized agent of obligations with respect to this bid. The submission of a bid and signature below shall be taken as evidence of acceptance of the terms and conditions of this bid.

The Bidder further declares that no other persons other than the authorized agent herein named has any interest in this bid or in the contract to be taken, and that it is made without any connection with any other person or persons making proposal for the same article, and is in all respects fair and without collusion or fraud.

The Bidder further declares that they have carefully examined the specifications and is thoroughly familiar with its provisions and with the quality, type and grade of materials required.

The Bidder further declares that they have provided a discount on all factory options included in this bid, and such discount will be included in all purchase orders.

The Bidder further declares that the company understands the financial responsibility associated with this bid as stated and further declares that it has the ability to meet the financial responsibility associated with this bid.

The Bidder further declares that the company will furnish the items awarded for the price bid.

FSA Contract Number: FSA26-EQU24.0 Equipment

Bidder Company Name: All Traffic Solutions, LLC (A TAPCO Brand)

Business Address: 5100 W Brown Deer Rd, Brown Deer, WI 53223

Name of Authorized Agent: John Kuehn

Email address of authorized agent: john.kuehn@tapconet.com

Signature: Signed by: John Kuehn 885B10211ED3498...

Date: 9/30/2026

Docusign Envelope ID: 3D961225-9F88-8200-837B-BA2D7FB5F547

CONTRACT SIGNATURE FORM

By submitting a response to this Invitation to Bid and signing this form, the Bidder declares that he or she has read, and the company understands, accepts and will comply with the terms, conditions and specifications of this bid and any addenda issued. The failure or omission to review this document shall in no way relieve the authorized agent of obligations with respect to this bid. The submission of a bid and signature below shall be taken as evidence of acceptance of the terms and conditions of this bid.

The Bidder further declares that no other persons other than the authorized agent herein named has any interest in this bid or in the contract to be taken, and that it is made without any connection with any other person or persons making proposal for the same article, and is in all respects fair and without collusion or fraud.

The Bidder further declares that they have carefully examined the specifications and is thoroughly familiar with its provisions and with the quality, type and grade of materials required.

The Bidder further declares that they have provided a discount on all factory options included in this bid, and such discount will be included in all purchase orders.

The Bidder further declares that the company understands the financial responsibility associated with this bid as stated and further declares that it has the ability to meet the financial responsibility associated with this bid.

The Bidder further declares that the company will furnish the items awarded for the price bid.

FSA Contract Number: FSA26-EQU24.0 Equipment

Bidder Company Name: Alta Construction Equipment Florida LLC

Business Address: 8418 Palm River Road Tampa, FL 33611

Name of Authorized Agent: Kevin Gray

Email address of authorized agent: kevin.gray@altg.com

Signature: DocuSigned by: 7BD4053B25164B2...

Date: 9/25/2026

Docusign Envelope ID: 1704D84E-6C46-8CAA-833C-F0998550288D

CONTRACT SIGNATURE FORM

By submitting a response to this Invitation to Bid and signing this form, the Bidder declares that he or she has read, and the company understands, accepts and will comply with the terms, conditions and specifications of this bid and any addenda issued. The failure or omission to review this document shall in no way relieve the authorized agent of obligations with respect to this bid. The submission of a bid and signature below shall be taken as evidence of acceptance of the terms and conditions of this bid.

The Bidder further declares that no other persons other than the authorized agent herein named has any interest in this bid or in the contract to be taken, and that it is made without any connection with any other person or persons making proposal for the same article, and is in all respects fair and without collusion or fraud.

The Bidder further declares that they have carefully examined the specifications and is thoroughly familiar with its provisions and with the quality, type and grade of materials required.

The Bidder further declares that they have provided a discount on all factory options included in this bid, and such discount will be included in all purchase orders.

The Bidder further declares that the company understands the financial responsibility associated with this bid as stated and further declares that it has the ability to meet the financial responsibility associated with this bid.

The Bidder further declares that the company will furnish the items awarded for the price bid.

FSA Contract Number: FSA26-EQU24.0 Equipment

Bidder Company Name: American Signal Company

Business Address: 2755 Bankers Industrial DR. Atlanta, GA 30360

Name of Authorized Agent: Seth Johnson

Email address of authorized agent: sjohnson@amsig.com

Signature: Signed by: Seth Johnson D321ECC2DF2C4C7...

Date: 9/24/2026

Docusign Envelope ID: 71C8E99F-0A6D-825E-83CD-4E8C211C83A1

CONTRACT SIGNATURE FORM

By submitting a response to this Invitation to Bid and signing this form, the Bidder declares that he or she has read, and the company understands, accepts and will comply with the terms, conditions and specifications of this bid and any addenda issued. The failure or omission to review this document shall in no way relieve the authorized agent of obligations with respect to this bid. The submission of a bid and signature below shall be taken as evidence of acceptance of the terms and conditions of this bid.

The Bidder further declares that no other persons other than the authorized agent herein named has any interest in this bid or in the contract to be taken, and that it is made without any connection with any other person or persons making proposal for the same article, and is in all respects fair and without collusion or fraud.

The Bidder further declares that they have carefully examined the specifications and is thoroughly familiar with its provisions and with the quality, type and grade of materials required.

The Bidder further declares that they have provided a discount on all factory options included in this bid, and such discount will be included in all purchase orders.

The Bidder further declares that the company understands the financial responsibility associated with this bid as stated and further declares that it has the ability to meet the financial responsibility associated with this bid.

The Bidder further declares that the company will furnish the items awarded for the price bid.

FSA Contract Number: FSA26-EQU24.0 Equipment

Bidder Company Name: ARS Power Sports

Business Address: 1319 Hwy 70 E Okeechobee, FL 34972

Name of Authorized Agent: Phillip Woerner

Email address of authorized agent: phillipw@arspowersports.com

Signature: Signed by: Phillip Woerner A9C3DDC3C55F4D3...

Date: 9/23/2026

Docusign Envelope ID: 8A263833-B573-8D90-80C9-EFC7DCBE14B5

CONTRACT SIGNATURE FORM

By submitting a response to this Invitation to Bid and signing this form, the Bidder declares that he or she has read, and the company understands, accepts and will comply with the terms, conditions and specifications of this bid and any addenda issued. The failure or omission to review this document shall in no way relieve the authorized agent of obligations with respect to this bid. The submission of a bid and signature below shall be taken as evidence of acceptance of the terms and conditions of this bid.

The Bidder further declares that no other persons other than the authorized agent herein named has any interest in this bid or in the contract to be taken, and that it is made without any connection with any other person or persons making proposal for the same article, and is in all respects fair and without collusion or fraud.

The Bidder further declares that they have carefully examined the specifications and is thoroughly familiar with its provisions and with the quality, type and grade of materials required.

The Bidder further declares that they have provided a discount on all factory options included in this bid, and such discount will be included in all purchase orders.

The Bidder further declares that the company understands the financial responsibility associated with this bid as stated and further declares that it has the ability to meet the financial responsibility associated with this bid.

The Bidder further declares that the company will furnish the items awarded for the price bid.

FSA Contract Number: FSA26-EQU24.0 Equipment

Bidder Company Name: Aramsco, Inc.

Business Address: 5 Radnor Corporate Center, 100 Matsonford Road, Suite 510, Radnor, PA 19087

Name of Authorized Agent: Kate Moll-Taylor

Email address of authorized agent: kmolltaylor@aramsco.com

Signature: DocuSigned by: Kate Moll-Taylor 1E1D2A7A1EFD411...

Date: 9/24/2026

Docusign Envelope ID: 401F0EB6-CCA9-8C27-81C9-2CD03E580420

CONTRACT SIGNATURE FORM

By submitting a response to this Invitation to Bid and signing this form, the Bidder declares that he or she has read, and the company understands, accepts and will comply with the terms, conditions and specifications of this bid and any addenda issued. The failure or omission to review this document shall in no way relieve the authorized agent of obligations with respect to this bid. The submission of a bid and signature below shall be taken as evidence of acceptance of the terms and conditions of this bid.

The Bidder further declares that no other persons other than the authorized agent herein named has any interest in this bid or in the contract to be taken, and that it is made without any connection with any other person or persons making proposal for the same article, and is in all respects fair and without collusion or fraud.

The Bidder further declares that they have carefully examined the specifications and is thoroughly familiar with its provisions and with the quality, type and grade of materials required.

The Bidder further declares that they have provided a discount on all factory options included in this bid, and such discount will be included in all purchase orders.

The Bidder further declares that the company understands the financial responsibility associated with this bid as stated and further declares that it has the ability to meet the financial responsibility associated with this bid.

The Bidder further declares that the company will furnish the items awarded for the price bid.

FSA Contract Number: FSA26-EQU24.0 Equipment

Bidder Company Name: ARI Phoenix, Inc. dba ARI-HETRA

Business Address: 11163 Woodward Lane, Sharonville OH 45241

Name of Authorized Agent: Tekla Goodwin

Email address of authorized agent: teklagoodwin@ari-hetra.com

Signature: DocuSigned by: Tekla Goodwin 6DE0263E856E453...

Date: 9/23/2026

Docusign Envelope ID: A215833C-42FF-819C-8311-A6A73D6DEF79

CONTRACT SIGNATURE FORM

By submitting a response to this Invitation to Bid and signing this form, the Bidder declares that he or she has read, and the company understands, accepts and will comply with the terms, conditions and specifications of this bid and any addenda issued. The failure or omission to review this document shall in no way relieve the authorized agent of obligations with respect to this bid. The submission of a bid and signature below shall be taken as evidence of acceptance of the terms and conditions of this bid.

The Bidder further declares that no other persons other than the authorized agent herein named has any interest in this bid or in the contract to be taken, and that it is made without any connection with any other person or persons making proposal for the same article, and is in all respects fair and without collusion or fraud.

The Bidder further declares that they have carefully examined the specifications and is thoroughly familiar with its provisions and with the quality, type and grade of materials required.

The Bidder further declares that they have provided a discount on all factory options included in this bid, and such discount will be included in all purchase orders.

The Bidder further declares that the company understands the financial responsibility associated with this bid as stated and further declares that it has the ability to meet the financial responsibility associated with this bid.

The Bidder further declares that the company will furnish the items awarded for the price bid.

FSA Contract Number: FSA26-EQU24.0 Equipment

Bidder Company Name: Ariens Company (Gravely)

Business Address: 655 West Ryan Street, Brillion, WI 54110

Name of Authorized Agent: Tyler Walimaa

Email address of authorized agent: twalimaa@ariensco.com

Signature: DocuSigned by: Tyler Walimaa 74B7B427FF174CC...

Date: 9/23/2026

Docusign Envelope ID: CB3189C9-A5D5-887B-83F0-138D659AAFF8

CONTRACT SIGNATURE FORM

By submitting a response to this Invitation to Bid and signing this form, the Bidder declares that he or she has read, and the company understands, accepts and will comply with the terms, conditions and specifications of this bid and any addenda issued. The failure or omission to review this document shall in no way relieve the authorized agent of obligations with respect to this bid. The submission of a bid and signature below shall be taken as evidence of acceptance of the terms and conditions of this bid.

The Bidder further declares that no other persons other than the authorized agent herein named has any interest in this bid or in the contract to be taken, and that it is made without any connection with any other person or persons making proposal for the same article, and is in all respects fair and without collusion or fraud.

The Bidder further declares that they have carefully examined the specifications and is thoroughly familiar with its provisions and with the quality, type and grade of materials required.

The Bidder further declares that they have provided a discount on all factory options included in this bid, and such discount will be included in all purchase orders.

The Bidder further declares that the company understands the financial responsibility associated with this bid as stated and further declares that it has the ability to meet the financial responsibility associated with this bid.

The Bidder further declares that the company will furnish the items awarded for the price bid.

FSA Contract Number: FSA26-EQU24.0 Equipment

Bidder Company Name: BBA Pumps, Inc.

Business Address: 7222 B Cross Park Drive, North Charleston, SC 29418

Name of Authorized Agent: Justin Booth

Email address of authorized agent: jbooth@bbapumps.com

Signature: DocuSigned by: Justin Booth 6C57BFE7803942E...

Date: 9/28/2026

Docusign Envelope ID: A4D9A855-032C-80DA-82DF-76A25B66B8BA

CONTRACT SIGNATURE FORM

By submitting a response to this Invitation to Bid and signing this form, the Bidder declares that he or she has read, and the company understands, accepts and will comply with the terms, conditions and specifications of this bid and any addenda issued. The failure or omission to review this document shall in no way relieve the authorized agent of obligations with respect to this bid. The submission of a bid and signature below shall be taken as evidence of acceptance of the terms and conditions of this bid.

The Bidder further declares that no other persons other than the authorized agent herein named has any interest in this bid or in the contract to be taken, and that it is made without any connection with any other person or persons making proposal for the same article, and is in all respects fair and without collusion or fraud.

The Bidder further declares that they have carefully examined the specifications and is thoroughly familiar with its provisions and with the quality, type and grade of materials required.

The Bidder further declares that they have provided a discount on all factory options included in this bid, and such discount will be included in all purchase orders.

The Bidder further declares that the company understands the financial responsibility associated with this bid as stated and further declares that it has the ability to meet the financial responsibility associated with this bid.

The Bidder further declares that the company will furnish the items awarded for the price bid.

FSA Contract Number: FSA26-EQU24.0 Equipment

Bidder Company Name: Container Systems & Equipment Co., Inc.

Business Address: 506 Bellevue Avenue., Daytona Beach, FL 32114

Name of Authorized Agent: William Young

Email address of authorized agent: byoung@containersys.com

Signature: Signed by: William Young 55E2D5B724E54AD...

Date: 9/23/2026

Docusign Envelope ID: 1D5C0BE9-5649-8BFA-839F-F05F51FA625E

CONTRACT SIGNATURE FORM

By submitting a response to this Invitation to Bid and signing this form, the Bidder declares that he or she has read, and the company understands, accepts and will comply with the terms, conditions and specifications of this bid and any addenda issued. The failure or omission to review this document shall in no way relieve the authorized agent of obligations with respect to this bid. The submission of a bid and signature below shall be taken as evidence of acceptance of the terms and conditions of this bid.

The Bidder further declares that no other persons other than the authorized agent herein named has any interest in this bid or in the contract to be taken, and that it is made without any connection with any other person or persons making proposal for the same article, and is in all respects fair and without collusion or fraud.

The Bidder further declares that they have carefully examined the specifications and is thoroughly familiar with its provisions and with the quality, type and grade of materials required.

The Bidder further declares that they have provided a discount on all factory options included in this bid, and such discount will be included in all purchase orders.

The Bidder further declares that the company understands the financial responsibility associated with this bid as stated and further declares that it has the ability to meet the financial responsibility associated with this bid.

The Bidder further declares that the company will furnish the items awarded for the price bid.

FSA Contract Number: FSA26-EQU24.0 Equipment

Bidder Company Name: Cowin Equipment Company Inc

Business Address: 7950 Pittman Avenue, Pensacola Fl. 32534

Name of Authorized Agent: John Edwards

Email address of authorized agent: jedwards@cowin.com

Signature: Signed by: John Edwards F4EC8488C5644A8...

Date: 9/23/2026

Docusign Envelope ID: 7CEA0B64-79C1-8C2B-8204-3364BE6F4D76

CONTRACT SIGNATURE FORM

By submitting a response to this Invitation to Bid and signing this form, the Bidder declares that he or she has read, and the company understands, accepts and will comply with the terms, conditions and specifications of this bid and any addenda issued. The failure or omission to review this document shall in no way relieve the authorized agent of obligations with respect to this bid. The submission of a bid and signature below shall be taken as evidence of acceptance of the terms and conditions of this bid.

The Bidder further declares that no other persons other than the authorized agent herein named has any interest in this bid or in the contract to be taken, and that it is made without any connection with any other person or persons making proposal for the same article, and is in all respects fair and without collusion or fraud.

The Bidder further declares that they have carefully examined the specifications and is thoroughly familiar with its provisions and with the quality, type and grade of materials required.

The Bidder further declares that they have provided a discount on all factory options included in this bid, and such discount will be included in all purchase orders.

The Bidder further declares that the company understands the financial responsibility associated with this bid as stated and further declares that it has the ability to meet the financial responsibility associated with this bid.

The Bidder further declares that the company will furnish the items awarded for the price bid.

FSA Contract Number: FSA26-EQU24.0 Equipment

Bidder Company Name: Creel Tractor Company

Business Address: 3771 Palm Beach Blvd Fort Myers, FL 33916

Name of Authorized Agent: Brian Creel

Email address of authorized agent: brian@creeltractor.com

Signature: DocuSigned by: Brian Creel 5D10747940BC41A...

Date: 9/23/2026

Docusign Envelope ID: 4E0124E3-470D-8792-83EA-FF7CD1F42C1E

CONTRACT SIGNATURE FORM

By submitting a response to this Invitation to Bid and signing this form, the Bidder declares that he or she has read, and the company understands, accepts and will comply with the terms, conditions and specifications of this bid and any addenda issued. The failure or omission to review this document shall in no way relieve the authorized agent of obligations with respect to this bid. The submission of a bid and signature below shall be taken as evidence of acceptance of the terms and conditions of this bid.

The Bidder further declares that no other persons other than the authorized agent herein named has any interest in this bid or in the contract to be taken, and that it is made without any connection with any other person or persons making proposal for the same article, and is in all respects fair and without collusion or fraud.

The Bidder further declares that they have carefully examined the specifications and is thoroughly familiar with its provisions and with the quality, type and grade of materials required.

The Bidder further declares that they have provided a discount on all factory options included in this bid, and such discount will be included in all purchase orders.

The Bidder further declares that the company understands the financial responsibility associated with this bid as stated and further declares that it has the ability to meet the financial responsibility associated with this bid.

The Bidder further declares that the company will furnish the items awarded for the price bid.

FSA Contract Number: FSA26-EQU24.0 Equipment

Bidder Company Name: Croc Enterprises, LLC dba Croc Crash Solutions

Business Address: 2989 SE Monroe St, Stuart, FL 34997

Name of Authorized Agent: Mike Caffrey

Email address of authorized agent: mike@wearecroc.com

Signature: Signed by: Mike Caffrey 68CA9787FEFD4DB...

Date: 9/23/2026

Docusign Envelope ID: B588A7AF-2207-8C9D-81A7-64AEBCC6845A

CONTRACT SIGNATURE FORM

By submitting a response to this Invitation to Bid and signing this form, the Bidder declares that he or she has read, and the company understands, accepts and will comply with the terms, conditions and specifications of this bid and any addenda issued. The failure or omission to review this document shall in no way relieve the authorized agent of obligations with respect to this bid. The submission of a bid and signature below shall be taken as evidence of acceptance of the terms and conditions of this bid.

The Bidder further declares that no other persons other than the authorized agent herein named has any interest in this bid or in the contract to be taken, and that it is made without any connection with any other person or persons making proposal for the same article, and is in all respects fair and without collusion or fraud.

The Bidder further declares that they have carefully examined the specifications and is thoroughly familiar with its provisions and with the quality, type and grade of materials required.

The Bidder further declares that they have provided a discount on all factory options included in this bid, and such discount will be included in all purchase orders.

The Bidder further declares that the company understands the financial responsibility associated with this bid as stated and further declares that it has the ability to meet the financial responsibility associated with this bid.

The Bidder further declares that the company will furnish the items awarded for the price bid.

FSA Contract Number: FSA26-EQU24.0 Equipment

Bidder Company Name: DeLand Truck Center, inc.

Business Address: 1208 South Woodland Blvd. DeLand,Fl 32720

Name of Authorized Agent: Howard Williams

Email address of authorized agent: howardwilliams@cfl.rr.com

Signature: Signed by: Howard Williams A538AF2AA03F479...

Date: 9/23/2026

Docusign Envelope ID: 2F880501-A183-86C7-8154-493D297E6C27

CONTRACT SIGNATURE FORM

By submitting a response to this Invitation to Bid and signing this form, the Bidder declares that he or she has read, and the company understands, accepts and will comply with the terms, conditions and specifications of this bid and any addenda issued. The failure or omission to review this document shall in no way relieve the authorized agent of obligations with respect to this bid. The submission of a bid and signature below shall be taken as evidence of acceptance of the terms and conditions of this bid.

The Bidder further declares that no other persons other than the authorized agent herein named has any interest in this bid or in the contract to be taken, and that it is made without any connection with any other person or persons making proposal for the same article, and is in all respects fair and without collusion or fraud.

The Bidder further declares that they have carefully examined the specifications and is thoroughly familiar with its provisions and with the quality, type and grade of materials required.

The Bidder further declares that they have provided a discount on all factory options included in this bid, and such discount will be included in all purchase orders.

The Bidder further declares that the company understands the financial responsibility associated with this bid as stated and further declares that it has the ability to meet the financial responsibility associated with this bid.

The Bidder further declares that the company will furnish the items awarded for the price bid.

FSA Contract Number: FSA26-EQU24.0 Equipment

Bidder Company Name: Dobbs Equipment, LLC

Business Address: 2730 S. Falkenburg Rd. Riverview FL, 33578

Name of Authorized Agent: Peter Richa

Email address of authorized agent: Peter.Richa@dobbsequipment.com

Signature: Signed by: Peter Richa B96D423D0D8D4B7...

Date: 9/25/2026

Docusign Envelope ID: 1DA09016-3319-8315-80FD-D91ABC59BBDF

CONTRACT SIGNATURE FORM

By submitting a response to this Invitation to Bid and signing this form, the Bidder declares that he or she has read, and the company understands, accepts and will comply with the terms, conditions and specifications of this bid and any addenda issued. The failure or omission to review this document shall in no way relieve the authorized agent of obligations with respect to this bid. The submission of a bid and signature below shall be taken as evidence of acceptance of the terms and conditions of this bid.

The Bidder further declares that no other persons other than the authorized agent herein named has any interest in this bid or in the contract to be taken, and that it is made without any connection with any other person or persons making proposal for the same article, and is in all respects fair and without collusion or fraud.

The Bidder further declares that they have carefully examined the specifications and is thoroughly familiar with its provisions and with the quality, type and grade of materials required.

The Bidder further declares that they have provided a discount on all factory options included in this bid, and such discount will be included in all purchase orders.

The Bidder further declares that the company understands the financial responsibility associated with this bid as stated and further declares that it has the ability to meet the financial responsibility associated with this bid.

The Bidder further declares that the company will furnish the items awarded for the price bid.

FSA Contract Number: FSA26-EQU24.0 Equipment

Bidder Company Name: Doosan Bobcat North America, Inc.

Business Address: 250 E. Beaton Drive, West Fargo ND 58078

Name of Authorized Agent: Kristie Willett

Email address of authorized agent: kristie.willett@doosan.com

Signature: Signed by: Kristie Willett 1E6BB8E8E0604BD...

Date: 9/23/2026

Docusign Envelope ID: 52823F55-3CA5-8FC8-8131-DF0E918BC43A

CONTRACT SIGNATURE FORM

By submitting a response to this Invitation to Bid and signing this form, the Bidder declares that he or she has read, and the company understands, accepts and will comply with the terms, conditions and specifications of this bid and any addenda issued. The failure or omission to review this document shall in no way relieve the authorized agent of obligations with respect to this bid. The submission of a bid and signature below shall be taken as evidence of acceptance of the terms and conditions of this bid.

The Bidder further declares that no other persons other than the authorized agent herein named has any interest in this bid or in the contract to be taken, and that it is made without any connection with any other person or persons making proposal for the same article, and is in all respects fair and without collusion or fraud.

The Bidder further declares that they have carefully examined the specifications and is thoroughly familiar with its provisions and with the quality, type and grade of materials required.

The Bidder further declares that they have provided a discount on all factory options included in this bid, and such discount will be included in all purchase orders.

The Bidder further declares that the company understands the financial responsibility associated with this bid as stated and further declares that it has the ability to meet the financial responsibility associated with this bid.

The Bidder further declares that the company will furnish the items awarded for the price bid.

FSA Contract Number: FSA26-EQU24.0 Equipment

Bidder Company Name: Emergency Standby Power

Business Address: 17 Duval St, Fort Walton Beach FL 32547

Name of Authorized Agent: Marcus Budig

Email address of authorized agent: sales@espgenerators.com

Signature: Signed by: Marcus Budig 8411B4FF812B419...

Date: 9/25/2026

Docusign Envelope ID: 8AEE688B-6BDC-8EE2-827A-272EE8B7C228

CONTRACT SIGNATURE FORM

By submitting a response to this Invitation to Bid and signing this form, the Bidder declares that he or she has read, and the company understands, accepts and will comply with the terms, conditions and specifications of this bid and any addenda issued. The failure or omission to review this document shall in no way relieve the authorized agent of obligations with respect to this bid. The submission of a bid and signature below shall be taken as evidence of acceptance of the terms and conditions of this bid.

The Bidder further declares that no other persons other than the authorized agent herein named has any interest in this bid or in the contract to be taken, and that it is made without any connection with any other person or persons making proposal for the same article, and is in all respects fair and without collusion or fraud.

The Bidder further declares that they have carefully examined the specifications and is thoroughly familiar with its provisions and with the quality, type and grade of materials required.

The Bidder further declares that they have provided a discount on all factory options included in this bid, and such discount will be included in all purchase orders.

The Bidder further declares that the company understands the financial responsibility associated with this bid as stated and further declares that it has the ability to meet the financial responsibility associated with this bid.

The Bidder further declares that the company will furnish the items awarded for the price bid.

FSA Contract Number: FSA26-EQU24.0 Equipment

Bidder Company Name: Environmental Products Group Inc.

Business Address: 700 Hermit Smith Rd. Apopka, FL 32703

Name of Authorized Agent: Mitch Fratesi

Email address of authorized agent: mfratesi@myepg.com

Signature: DocuSigned by: Mitch Fratesi 087DD43302D04AE...

Date: 9/28/2026

Docusign Envelope ID: 2DE795B8-2B27-8F0A-8021-09D80689A1B4

CONTRACT SIGNATURE FORM

By submitting a response to this Invitation to Bid and signing this form, the Bidder declares that he or she has read, and the company understands, accepts and will comply with the terms, conditions and specifications of this bid and any addenda issued. The failure or omission to review this document shall in no way relieve the authorized agent of obligations with respect to this bid. The submission of a bid and signature below shall be taken as evidence of acceptance of the terms and conditions of this bid.

The Bidder further declares that no other persons other than the authorized agent herein named has any interest in this bid or in the contract to be taken, and that it is made without any connection with any other person or persons making proposal for the same article, and is in all respects fair and without collusion or fraud.

The Bidder further declares that they have carefully examined the specifications and is thoroughly familiar with its provisions and with the quality, type and grade of materials required.

The Bidder further declares that they have provided a discount on all factory options included in this bid, and such discount will be included in all purchase orders.

The Bidder further declares that the company understands the financial responsibility associated with this bid as stated and further declares that it has the ability to meet the financial responsibility associated with this bid.

The Bidder further declares that the company will furnish the items awarded for the price bid.

FSA Contract Number: FSA26-EQU24.0 Equipment

Bidder Company Name: Everglades Equipment Group

Business Address: 137 Professional Way Wellington, FL 33414

Name of Authorized Agent: Clint Vaughn

Email address of authorized agent: cvaughn@efe1963.com

Signature: Signed by: Clint Vaughn E7147624599E4AC...

Date: 9/24/2026

Docusign Envelope ID: D9235547-85E1-8658-80CC-6FAAA3A636CC

CONTRACT SIGNATURE FORM

By submitting a response to this Invitation to Bid and signing this form, the Bidder declares that he or she has read, and the company understands, accepts and will comply with the terms, conditions and specifications of this bid and any addenda issued. The failure or omission to review this document shall in no way relieve the authorized agent of obligations with respect to this bid. The submission of a bid and signature below shall be taken as evidence of acceptance of the terms and conditions of this bid.

The Bidder further declares that no other persons other than the authorized agent herein named has any interest in this bid or in the contract to be taken, and that it is made without any connection with any other person or persons making proposal for the same article, and is in all respects fair and without collusion or fraud.

The Bidder further declares that they have carefully examined the specifications and is thoroughly familiar with its provisions and with the quality, type and grade of materials required.

The Bidder further declares that they have provided a discount on all factory options included in this bid, and such discount will be included in all purchase orders.

The Bidder further declares that the company understands the financial responsibility associated with this bid as stated and further declares that it has the ability to meet the financial responsibility associated with this bid.

The Bidder further declares that the company will furnish the items awarded for the price bid.

FSA Contract Number: FSA26-EQU24.0 Equipment

Bidder Company Name: Evervac Equipment

Business Address: 5105 Recker Hwy, Winter Haven, FL 33880

Name of Authorized Agent: Austen Everett

Email address of authorized agent: AEverett@EvervacFL.com

Signature: Signed by: 50A5ADB0E57E4A9...

Date: 9/28/2026

Docusign Envelope ID: 4889BA68-EE5F-8486-8397-37A3581206F3

CONTRACT SIGNATURE FORM

By submitting a response to this Invitation to Bid and signing this form, the Bidder declares that he or she has read, and the company understands, accepts and will comply with the terms, conditions and specifications of this bid and any addenda issued. The failure or omission to review this document shall in no way relieve the authorized agent of obligations with respect to this bid. The submission of a bid and signature below shall be taken as evidence of acceptance of the terms and conditions of this bid.

The Bidder further declares that no other persons other than the authorized agent herein named has any interest in this bid or in the contract to be taken, and that it is made without any connection with any other person or persons making proposal for the same article, and is in all respects fair and without collusion or fraud.

The Bidder further declares that they have carefully examined the specifications and is thoroughly familiar with its provisions and with the quality, type and grade of materials required.

The Bidder further declares that they have provided a discount on all factory options included in this bid, and such discount will be included in all purchase orders.

The Bidder further declares that the company understands the financial responsibility associated with this bid as stated and further declares that it has the ability to meet the financial responsibility associated with this bid.

The Bidder further declares that the company will furnish the items awarded for the price bid.

FSA Contract Number: FSA26-EQU24.0 Equipment

Bidder Company Name: Federal Contracts LLC

Business Address: 12918 North Nebraska Avenue, Tampa, FL 33612-4446

Name of Authorized Agent: Rusty Pugh

Email address of authorized agent: rusty@federalcontractscorp.com

Signature: Signed by: Rusty Pugh A6F07224865043E...

Date: 9/23/2026

Docusign Envelope ID: 983AEC01-96F6-83F3-80ED-9F17B361F7A0

CONTRACT SIGNATURE FORM

By submitting a response to this Invitation to Bid and signing this form, the Bidder declares that he or she has read, and the company understands, accepts and will comply with the terms, conditions and specifications of this bid and any addenda issued. The failure or omission to review this document shall in no way relieve the authorized agent of obligations with respect to this bid. The submission of a bid and signature below shall be taken as evidence of acceptance of the terms and conditions of this bid.

The Bidder further declares that no other persons other than the authorized agent herein named has any interest in this bid or in the contract to be taken, and that it is made without any connection with any other person or persons making proposal for the same article, and is in all respects fair and without collusion or fraud.

The Bidder further declares that they have carefully examined the specifications and is thoroughly familiar with its provisions and with the quality, type and grade of materials required.

The Bidder further declares that they have provided a discount on all factory options included in this bid, and such discount will be included in all purchase orders.

The Bidder further declares that the company understands the financial responsibility associated with this bid as stated and further declares that it has the ability to meet the financial responsibility associated with this bid.

The Bidder further declares that the company will furnish the items awarded for the price bid.

FSA Contract Number: FSA26-EQU24.0 Equipment

Bidder Company Name: Florida Coast Equipment, LLC

Business Address: 1401 Forum Way, Ste 100, West Palm Beach, FL 33401

Name of Authorized Agent: Joe Moreno

Email address of authorized agent: JMoreno@FloridaCoastEQ.com

Signature: Signed by: Joe Moreno 7EC397D020F5406...

Date: 9/24/2026

Docusign Envelope ID: 87035976-1716-83DF-83FC-F6466BEFF28A

CONTRACT SIGNATURE FORM

By submitting a response to this Invitation to Bid and signing this form, the Bidder declares that he or she has read, and the company understands, accepts and will comply with the terms, conditions and specifications of this bid and any addenda issued. The failure or omission to review this document shall in no way relieve the authorized agent of obligations with respect to this bid. The submission of a bid and signature below shall be taken as evidence of acceptance of the terms and conditions of this bid.

The Bidder further declares that no other persons other than the authorized agent herein named has any interest in this bid or in the contract to be taken, and that it is made without any connection with any other person or persons making proposal for the same article, and is in all respects fair and without collusion or fraud.

The Bidder further declares that they have carefully examined the specifications and is thoroughly familiar with its provisions and with the quality, type and grade of materials required.

The Bidder further declares that they have provided a discount on all factory options included in this bid, and such discount will be included in all purchase orders.

The Bidder further declares that the company understands the financial responsibility associated with this bid as stated and further declares that it has the ability to meet the financial responsibility associated with this bid.

The Bidder further declares that the company will furnish the items awarded for the price bid.

FSA Contract Number: FSA26-EQU24.0 Equipment

Bidder Company Name: GenServe, LLC

Business Address: 3882 NW 124th Ave, Coral Springs, FL 33065

Name of Authorized Agent: John Potts

Email address of authorized agent: jpotts@genserveinc.com

Signature: Signed by: John Potts CD8D7B7A0C104E8...

Date: 9/24/2026

Docusign Envelope ID: 3996A93F-65C9-8106-8060-84DDDF5FE38B

CONTRACT SIGNATURE FORM

By submitting a response to this Invitation to Bid and signing this form, the Bidder declares that he or she has read, and the company understands, accepts and will comply with the terms, conditions and specifications of this bid and any addenda issued. The failure or omission to review this document shall in no way relieve the authorized agent of obligations with respect to this bid. The submission of a bid and signature below shall be taken as evidence of acceptance of the terms and conditions of this bid.

The Bidder further declares that no other persons other than the authorized agent herein named has any interest in this bid or in the contract to be taken, and that it is made without any connection with any other person or persons making proposal for the same article, and is in all respects fair and without collusion or fraud.

The Bidder further declares that they have carefully examined the specifications and is thoroughly familiar with its provisions and with the quality, type and grade of materials required.

The Bidder further declares that they have provided a discount on all factory options included in this bid, and such discount will be included in all purchase orders.

The Bidder further declares that the company understands the financial responsibility associated with this bid as stated and further declares that it has the ability to meet the financial responsibility associated with this bid.

The Bidder further declares that the company will furnish the items awarded for the price bid.

FSA Contract Number: FSA26-EQU24.0 Equipment

Bidder Company Name: Great Southern Equipment LLC

Business Address: 1023 S 50th St Tampa FL 33619

Name of Authorized Agent: Ray Ferwerda

Email address of authorized agent: rferwerda@gsequipment.net

Signature: DocuSigned by: Ray Ferwerda 30D58C12A8D04D5...

Date: 9/28/2026

Docusign Envelope ID: DE421ADE-155B-8D13-8139-6BAD2C4CE84E

CONTRACT SIGNATURE FORM

By submitting a response to this Invitation to Bid and signing this form, the Bidder declares that he or she has read, and the company understands, accepts and will comply with the terms, conditions and specifications of this bid and any addenda issued. The failure or omission to review this document shall in no way relieve the authorized agent of obligations with respect to this bid. The submission of a bid and signature below shall be taken as evidence of acceptance of the terms and conditions of this bid.

The Bidder further declares that no other persons other than the authorized agent herein named has any interest in this bid or in the contract to be taken, and that it is made without any connection with any other person or persons making proposal for the same article, and is in all respects fair and without collusion or fraud.

The Bidder further declares that they have carefully examined the specifications and is thoroughly familiar with its provisions and with the quality, type and grade of materials required.

The Bidder further declares that they have provided a discount on all factory options included in this bid, and such discount will be included in all purchase orders.

The Bidder further declares that the company understands the financial responsibility associated with this bid as stated and further declares that it has the ability to meet the financial responsibility associated with this bid.

The Bidder further declares that the company will furnish the items awarded for the price bid.

FSA Contract Number: FSA26-EQU24.0 Equipment

Bidder Company Name: HD CONSTRUCTION EQUIPMENT DEVELON NORTH AMERICA LLC

Business Address: 2905 Shawnee Industrial Way Suite 100

Name of Authorized Agent: RANDY SHEARIN

Email address of authorized agent: randys.equipment@yahoo.com

Signature: DocuSigned by: RANDY SHEARIN 6AD2EA0B5E1344F...

Date: 9/30/2026

Docusign Envelope ID: 46B98CA2-8572-824A-8031-53368F385AAF

CONTRACT SIGNATURE FORM

By submitting a response to this Invitation to Bid and signing this form, the Bidder declares that he or she has read, and the company understands, accepts and will comply with the terms, conditions and specifications of this bid and any addenda issued. The failure or omission to review this document shall in no way relieve the authorized agent of obligations with respect to this bid. The submission of a bid and signature below shall be taken as evidence of acceptance of the terms and conditions of this bid.

The Bidder further declares that no other persons other than the authorized agent herein named has any interest in this bid or in the contract to be taken, and that it is made without any connection with any other person or persons making proposal for the same article, and is in all respects fair and without collusion or fraud.

The Bidder further declares that they have carefully examined the specifications and is thoroughly familiar with its provisions and with the quality, type and grade of materials required.

The Bidder further declares that they have provided a discount on all factory options included in this bid, and such discount will be included in all purchase orders.

The Bidder further declares that the company understands the financial responsibility associated with this bid as stated and further declares that it has the ability to meet the financial responsibility associated with this bid.

The Bidder further declares that the company will furnish the items awarded for the price bid.

FSA Contract Number: FSA26-EQU24.0 Equipment

Bidder Company Name: Humdinger Equipment, Ltd.

Business Address: 3202 Clovis Road, Lubbock, Texas 79415

Name of Authorized Agent: Chad Phares

Email address of authorized agent: chad@humdingerequipment.com

Signature: DocuSigned by: Chad Phares 4D73F467D23C477...

Date: 9/23/2026

Docusign Envelope ID: 46CAEA82-95F5-809F-8328-CF971EFE14C3

CONTRACT SIGNATURE FORM

By submitting a response to this Invitation to Bid and signing this form, the Bidder declares that he or she has read, and the company understands, accepts and will comply with the terms, conditions and specifications of this bid and any addenda issued. The failure or omission to review this document shall in no way relieve the authorized agent of obligations with respect to this bid. The submission of a bid and signature below shall be taken as evidence of acceptance of the terms and conditions of this bid.

The Bidder further declares that no other persons other than the authorized agent herein named has any interest in this bid or in the contract to be taken, and that it is made without any connection with any other person or persons making proposal for the same article, and is in all respects fair and without collusion or fraud.

The Bidder further declares that they have carefully examined the specifications and is thoroughly familiar with its provisions and with the quality, type and grade of materials required.

The Bidder further declares that they have provided a discount on all factory options included in this bid, and such discount will be included in all purchase orders.

The Bidder further declares that the company understands the financial responsibility associated with this bid as stated and further declares that it has the ability to meet the financial responsibility associated with this bid.

The Bidder further declares that the company will furnish the items awarded for the price bid.

FSA Contract Number: FSA26-EQU24.0 Equipment

Bidder Company Name: Innovative Equipment Services 2 d/b/a CASE Power and Equipment of Florida

Business Address: 12601 W. Okeechobee Road Hialeah Gardens, FL 33018

Name of Authorized Agent: Jabbok Schlacks

Email address of authorized agent: jabbok@equipmentshare.com

Signature: DocuSigned by: Jabbok Schlacks 1A76C5C01E7F4E3...

Date: 9/28/2026

Docusign Envelope ID: F85E22BA-2CEB-8655-825D-34E8D702C5B6

CONTRACT SIGNATURE FORM

By submitting a response to this Invitation to Bid and signing this form, the Bidder declares that he or she has read, and the company understands, accepts and will comply with the terms, conditions and specifications of this bid and any addenda issued. The failure or omission to review this document shall in no way relieve the authorized agent of obligations with respect to this bid. The submission of a bid and signature below shall be taken as evidence of acceptance of the terms and conditions of this bid.

The Bidder further declares that no other persons other than the authorized agent herein named has any interest in this bid or in the contract to be taken, and that it is made without any connection with any other person or persons making proposal for the same article, and is in all respects fair and without collusion or fraud.

The Bidder further declares that they have carefully examined the specifications and is thoroughly familiar with its provisions and with the quality, type and grade of materials required.

The Bidder further declares that they have provided a discount on all factory options included in this bid, and such discount will be included in all purchase orders.

The Bidder further declares that the company understands the financial responsibility associated with this bid as stated and further declares that it has the ability to meet the financial responsibility associated with this bid.

The Bidder further declares that the company will furnish the items awarded for the price bid.

FSA Contract Number: FSA26-EQU24.0 Equipment

Bidder Company Name: Jet-Vac Equipment Company, LLC

Business Address: 5746 Broad Street Sumter, SC 29154

Name of Authorized Agent: Justin Kohl

Email address of authorized agent: justin@jet-vac.com

Signature: Signed by: Justin Kohl A2DE932E1162473...

Date: 9/25/2026

Docusign Envelope ID: 12C258CF-58D6-81B0-818B-9064CE1E1A89

CONTRACT SIGNATURE FORM

By submitting a response to this Invitation to Bid and signing this form, the Bidder declares that he or she has read, and the company understands, accepts and will comply with the terms, conditions and specifications of this bid and any addenda issued. The failure or omission to review this document shall in no way relieve the authorized agent of obligations with respect to this bid. The submission of a bid and signature below shall be taken as evidence of acceptance of the terms and conditions of this bid.

The Bidder further declares that no other persons other than the authorized agent herein named has any interest in this bid or in the contract to be taken, and that it is made without any connection with any other person or persons making proposal for the same article, and is in all respects fair and without collusion or fraud.

The Bidder further declares that they have carefully examined the specifications and is thoroughly familiar with its provisions and with the quality, type and grade of materials required.

The Bidder further declares that they have provided a discount on all factory options included in this bid, and such discount will be included in all purchase orders.

The Bidder further declares that the company understands the financial responsibility associated with this bid as stated and further declares that it has the ability to meet the financial responsibility associated with this bid.

The Bidder further declares that the company will furnish the items awarded for the price bid.

FSA Contract Number: FSA26-EQU24.0 Equipment

Bidder Company Name: Jobbers Equipment Warehouse Inc

Business Address: 5440 NW 78 AVE DORAL FL 33166

Name of Authorized Agent: Maria J Ahearn

Email address of authorized agent: support@jobbersmiami.com

Signature: Signed by: Maria J Ahearn 3CD417C35CB14E3...

Date: 9/24/2026

Docusign Envelope ID: 25860186-7D08-82BE-81FA-22138005B9F5

CONTRACT SIGNATURE FORM

By submitting a response to this Invitation to Bid and signing this form, the Bidder declares that he or she has read, and the company understands, accepts and will comply with the terms, conditions and specifications of this bid and any addenda issued. The failure or omission to review this document shall in no way relieve the authorized agent of obligations with respect to this bid. The submission of a bid and signature below shall be taken as evidence of acceptance of the terms and conditions of this bid.

The Bidder further declares that no other persons other than the authorized agent herein named has any interest in this bid or in the contract to be taken, and that it is made without any connection with any other person or persons making proposal for the same article, and is in all respects fair and without collusion or fraud.

The Bidder further declares that they have carefully examined the specifications and is thoroughly familiar with its provisions and with the quality, type and grade of materials required.

The Bidder further declares that they have provided a discount on all factory options included in this bid, and such discount will be included in all purchase orders.

The Bidder further declares that the company understands the financial responsibility associated with this bid as stated and further declares that it has the ability to meet the financial responsibility associated with this bid.

The Bidder further declares that the company will furnish the items awarded for the price bid.

FSA Contract Number: FSA26-EQU24.0 Equipment

Bidder Company Name: K&K Systems, Inc.

Business Address: 687 Palmetto Road Tupelo, MS 38801

Name of Authorized Agent: Wayne Kasal

Email address of authorized agent: wkasal@k-ksystems.com

Signature: Signed by: Wayne Kasal 5C98F80B37E94F1...

Date: 9/23/2026

Docusign Envelope ID: FB54CFE0-31B6-81DC-83C3-13B8F76C50EA

CONTRACT SIGNATURE FORM

By submitting a response to this Invitation to Bid and signing this form, the Bidder declares that he or she has read, and the company understands, accepts and will comply with the terms, conditions and specifications of this bid and any addenda issued. The failure or omission to review this document shall in no way relieve the authorized agent of obligations with respect to this bid. The submission of a bid and signature below shall be taken as evidence of acceptance of the terms and conditions of this bid.

The Bidder further declares that no other persons other than the authorized agent herein named has any interest in this bid or in the contract to be taken, and that it is made without any connection with any other person or persons making proposal for the same article, and is in all respects fair and without collusion or fraud.

The Bidder further declares that they have carefully examined the specifications and is thoroughly familiar with its provisions and with the quality, type and grade of materials required.

The Bidder further declares that they have provided a discount on all factory options included in this bid, and such discount will be included in all purchase orders.

The Bidder further declares that the company understands the financial responsibility associated with this bid as stated and further declares that it has the ability to meet the financial responsibility associated with this bid.

The Bidder further declares that the company will furnish the items awarded for the price bid.

FSA Contract Number: FSA26-EQU24.0 Equipment

Bidder Company Name: Kelly Tractor Co

Business Address: Kelly Tractor Co

Name of Authorized Agent: GREG BENNETT

Email address of authorized agent: greg_bennett@kellytractor.com

Signature: DocuSigned by: CF004C8421B342D...

Date: 9/28/2026

Docusign Envelope ID: 176C3A13-229D-8B1B-8089-0A4B88E2D370

CONTRACT SIGNATURE FORM

By submitting a response to this Invitation to Bid and signing this form, the Bidder declares that he or she has read, and the company understands, accepts and will comply with the terms, conditions and specifications of this bid and any addenda issued. The failure or omission to review this document shall in no way relieve the authorized agent of obligations with respect to this bid. The submission of a bid and signature below shall be taken as evidence of acceptance of the terms and conditions of this bid.

The Bidder further declares that no other persons other than the authorized agent herein named has any interest in this bid or in the contract to be taken, and that it is made without any connection with any other person or persons making proposal for the same article, and is in all respects fair and without collusion or fraud.

The Bidder further declares that they have carefully examined the specifications and is thoroughly familiar with its provisions and with the quality, type and grade of materials required.

The Bidder further declares that they have provided a discount on all factory options included in this bid, and such discount will be included in all purchase orders.

The Bidder further declares that the company understands the financial responsibility associated with this bid as stated and further declares that it has the ability to meet the financial responsibility associated with this bid.

The Bidder further declares that the company will furnish the items awarded for the price bid.

FSA Contract Number: FSA26-EQU24.0 Equipment

Bidder Company Name: KJF Equipment Services LLC

Business Address: 3331 N Race St, Denver CO 80205

Name of Authorized Agent: Kenneth Flores

Email address of authorized agent: Ken@kjfequipment.com

Signature: Signed by: Kenneth Flores D9A5EE2301B3423...

Date: 9/23/2026

Docusign Envelope ID: 613D23CD-6EC0-8744-81D3-06881BD7EE8C

CONTRACT SIGNATURE FORM

By submitting a response to this Invitation to Bid and signing this form, the Bidder declares that he or she has read, and the company understands, accepts and will comply with the terms, conditions and specifications of this bid and any addenda issued. The failure or omission to review this document shall in no way relieve the authorized agent of obligations with respect to this bid. The submission of a bid and signature below shall be taken as evidence of acceptance of the terms and conditions of this bid.

The Bidder further declares that no other persons other than the authorized agent herein named has any interest in this bid or in the contract to be taken, and that it is made without any connection with any other person or persons making proposal for the same article, and is in all respects fair and without collusion or fraud.

The Bidder further declares that they have carefully examined the specifications and is thoroughly familiar with its provisions and with the quality, type and grade of materials required.

The Bidder further declares that they have provided a discount on all factory options included in this bid, and such discount will be included in all purchase orders.

The Bidder further declares that the company understands the financial responsibility associated with this bid as stated and further declares that it has the ability to meet the financial responsibility associated with this bid.

The Bidder further declares that the company will furnish the items awarded for the price bid.

FSA Contract Number: FSA26-EQU24.0 Equipment

Bidder Company Name: Kustom Signals, Inc.

Business Address: 10901 W 84th Terrace Suite 100 Lenexa, KS 66214-1600

Name of Authorized Agent: eric money

Email address of authorized agent: emoney@kustomsignals.com

Signature: Signed by: eric money 09F79449BABA422...

Date: 9/23/2026

Docusign Envelope ID: B1E53AB3-24C5-8C16-818F-ACD22F466C0E

CONTRACT SIGNATURE FORM

By submitting a response to this Invitation to Bid and signing this form, the Bidder declares that he or she has read, and the company understands, accepts and will comply with the terms, conditions and specifications of this bid and any addenda issued. The failure or omission to review this document shall in no way relieve the authorized agent of obligations with respect to this bid. The submission of a bid and signature below shall be taken as evidence of acceptance of the terms and conditions of this bid.

The Bidder further declares that no other persons other than the authorized agent herein named has any interest in this bid or in the contract to be taken, and that it is made without any connection with any other person or persons making proposal for the same article, and is in all respects fair and without collusion or fraud.

The Bidder further declares that they have carefully examined the specifications and is thoroughly familiar with its provisions and with the quality, type and grade of materials required.

The Bidder further declares that they have provided a discount on all factory options included in this bid, and such discount will be included in all purchase orders.

The Bidder further declares that the company understands the financial responsibility associated with this bid as stated and further declares that it has the ability to meet the financial responsibility associated with this bid.

The Bidder further declares that the company will furnish the items awarded for the price bid.

FSA Contract Number: FSA26-EQU24.0 Equipment

Bidder Company Name: Love Power Equipment, Inc

Business Address: 2081 SOUTH SUNCOAST BLVD

Name of Authorized Agent: Ed Gurry

Email address of authorized agent: ed.gurry@lovepowerequipment.com

Signature: Signed by: Ed Gurry EA5DFADB50FD4DE...

Date: 9/23/2026

Docusign Envelope ID: 32DDAFE3-4402-8CCC-8054-DB17E0C0887C

CONTRACT SIGNATURE FORM

By submitting a response to this Invitation to Bid and signing this form, the Bidder declares that he or she has read, and the company understands, accepts and will comply with the terms, conditions and specifications of this bid and any addenda issued. The failure or omission to review this document shall in no way relieve the authorized agent of obligations with respect to this bid. The submission of a bid and signature below shall be taken as evidence of acceptance of the terms and conditions of this bid.

The Bidder further declares that no other persons other than the authorized agent herein named has any interest in this bid or in the contract to be taken, and that it is made without any connection with any other person or persons making proposal for the same article, and is in all respects fair and without collusion or fraud.

The Bidder further declares that they have carefully examined the specifications and is thoroughly familiar with its provisions and with the quality, type and grade of materials required.

The Bidder further declares that they have provided a discount on all factory options included in this bid, and such discount will be included in all purchase orders.

The Bidder further declares that the company understands the financial responsibility associated with this bid as stated and further declares that it has the ability to meet the financial responsibility associated with this bid.

The Bidder further declares that the company will furnish the items awarded for the price bid.

FSA Contract Number: FSA26-EQU24.0 Equipment

Bidder Company Name: MCKIBBEN POWERSPORTS

Business Address: 20769 US 27 Lake Wales, FL 33853

Name of Authorized Agent: Casey McKibben

Email address of authorized agent: casey.mckibben@mckibbencorp.com

Signature: Signed by: Casey Mckibben 8809E445DC86492...

Date: 9/29/2026

Docusign Envelope ID: 08EB4828-09F6-826D-81E7-DBC6F7002CE8

CONTRACT SIGNATURE FORM

By submitting a response to this Invitation to Bid and signing this form, the Bidder declares that he or she has read, and the company understands, accepts and will comply with the terms, conditions and specifications of this bid and any addenda issued. The failure or omission to review this document shall in no way relieve the authorized agent of obligations with respect to this bid. The submission of a bid and signature below shall be taken as evidence of acceptance of the terms and conditions of this bid.

The Bidder further declares that no other persons other than the authorized agent herein named has any interest in this bid or in the contract to be taken, and that it is made without any connection with any other person or persons making proposal for the same article, and is in all respects fair and without collusion or fraud.

The Bidder further declares that they have carefully examined the specifications and is thoroughly familiar with its provisions and with the quality, type and grade of materials required.

The Bidder further declares that they have provided a discount on all factory options included in this bid, and such discount will be included in all purchase orders.

The Bidder further declares that the company understands the financial responsibility associated with this bid as stated and further declares that it has the ability to meet the financial responsibility associated with this bid.

The Bidder further declares that the company will furnish the items awarded for the price bid.

FSA Contract Number: FSA26-EQU24.0 Equipment

Bidder Company Name: Menzi Muck USA, Inc.

Business Address: 1850 Fairbanks Street

Name of Authorized Agent: Christopher Meadows

Email address of authorized agent: chris@menziusa.com

Signature: DocuSigned by: E5FDCC4222AF4FD...

Date: 9/23/2026

Docusign Envelope ID: E70B2A12-32B2-8A80-83BB-F825E3967A01

CONTRACT SIGNATURE FORM

By submitting a response to this Invitation to Bid and signing this form, the Bidder declares that he or she has read, and the company understands, accepts and will comply with the terms, conditions and specifications of this bid and any addenda issued. The failure or omission to review this document shall in no way relieve the authorized agent of obligations with respect to this bid. The submission of a bid and signature below shall be taken as evidence of acceptance of the terms and conditions of this bid.

The Bidder further declares that no other persons other than the authorized agent herein named has any interest in this bid or in the contract to be taken, and that it is made without any connection with any other person or persons making proposal for the same article, and is in all respects fair and without collusion or fraud.

The Bidder further declares that they have carefully examined the specifications and is thoroughly familiar with its provisions and with the quality, type and grade of materials required.

The Bidder further declares that they have provided a discount on all factory options included in this bid, and such discount will be included in all purchase orders.

The Bidder further declares that the company understands the financial responsibility associated with this bid as stated and further declares that it has the ability to meet the financial responsibility associated with this bid.

The Bidder further declares that the company will furnish the items awarded for the price bid.

FSA Contract Number: FSA26-EQU24.0 Equipment

Bidder Company Name: Mersino

Business Address: 900 Squirrel Rd. Suite 210, Auburn Hills, Michigan 484326

Name of Authorized Agent: Scott Heard

Email address of authorized agent: scott.heard@globalpump.com

Signature: DocuSigned by: Scott Heard A2EBB747CFA2459...

Date: 9/23/2026

Docusign Envelope ID: 83292C4B-0032-8DE1-82E8-F5CB8E53CCA7

CONTRACT SIGNATURE FORM

By submitting a response to this Invitation to Bid and signing this form, the Bidder declares that he or she has read, and the company understands, accepts and will comply with the terms, conditions and specifications of this bid and any addenda issued. The failure or omission to review this document shall in no way relieve the authorized agent of obligations with respect to this bid. The submission of a bid and signature below shall be taken as evidence of acceptance of the terms and conditions of this bid.

The Bidder further declares that no other persons other than the authorized agent herein named has any interest in this bid or in the contract to be taken, and that it is made without any connection with any other person or persons making proposal for the same article, and is in all respects fair and without collusion or fraud.

The Bidder further declares that they have carefully examined the specifications and is thoroughly familiar with its provisions and with the quality, type and grade of materials required.

The Bidder further declares that they have provided a discount on all factory options included in this bid, and such discount will be included in all purchase orders.

The Bidder further declares that the company understands the financial responsibility associated with this bid as stated and further declares that it has the ability to meet the financial responsibility associated with this bid.

The Bidder further declares that the company will furnish the items awarded for the price bid.

FSA Contract Number: FSA26-EQU24.0 Equipment

Bidder Company Name: Mid-Florida Diesel, Inc

Business Address: 2215 State Road 60 East Bartow FL 33830

Name of Authorized Agent: Al McCoy

Email address of authorized agent: al@midfloridadiesel.com

Signature: Signed by: Al McCoy DC26788A5B0F413...

Date: 9/23/2026

Docusign Envelope ID: 6FBE54FD-415C-86EB-8085-9C9356927E50

CONTRACT SIGNATURE FORM

By submitting a response to this Invitation to Bid and signing this form, the Bidder declares that he or she has read, and the company understands, accepts and will comply with the terms, conditions and specifications of this bid and any addenda issued. The failure or omission to review this document shall in no way relieve the authorized agent of obligations with respect to this bid. The submission of a bid and signature below shall be taken as evidence of acceptance of the terms and conditions of this bid.

The Bidder further declares that no other persons other than the authorized agent herein named has any interest in this bid or in the contract to be taken, and that it is made without any connection with any other person or persons making proposal for the same article, and is in all respects fair and without collusion or fraud.

The Bidder further declares that they have carefully examined the specifications and is thoroughly familiar with its provisions and with the quality, type and grade of materials required.

The Bidder further declares that they have provided a discount on all factory options included in this bid, and such discount will be included in all purchase orders.

The Bidder further declares that the company understands the financial responsibility associated with this bid as stated and further declares that it has the ability to meet the financial responsibility associated with this bid.

The Bidder further declares that the company will furnish the items awarded for the price bid.

FSA Contract Number: FSA26-EQU24.0 Equipment

Bidder Company Name: Miller Heiman Holdings LLC dba Green Thumb Palm Beach

Business Address: 230 truck and trailer way, West Palm Beach FL 33413

Name of Authorized Agent: Jeff Miller

Email address of authorized agent: jmiller@greenthumbpalmbeach.com

Signature: DocuSigned by: Jeff Miller 1B82CF5CCB1E450...

Date: 9/24/2026

Docusign Envelope ID: 8A2A60E2-924A-8269-803B-67ACD2690294

CONTRACT SIGNATURE FORM

By submitting a response to this Invitation to Bid and signing this form, the Bidder declares that he or she has read, and the company understands, accepts and will comply with the terms, conditions and specifications of this bid and any addenda issued. The failure or omission to review this document shall in no way relieve the authorized agent of obligations with respect to this bid. The submission of a bid and signature below shall be taken as evidence of acceptance of the terms and conditions of this bid.

The Bidder further declares that no other persons other than the authorized agent herein named has any interest in this bid or in the contract to be taken, and that it is made without any connection with any other person or persons making proposal for the same article, and is in all respects fair and without collusion or fraud.

The Bidder further declares that they have carefully examined the specifications and is thoroughly familiar with its provisions and with the quality, type and grade of materials required.

The Bidder further declares that they have provided a discount on all factory options included in this bid, and such discount will be included in all purchase orders.

The Bidder further declares that the company understands the financial responsibility associated with this bid as stated and further declares that it has the ability to meet the financial responsibility associated with this bid.

The Bidder further declares that the company will furnish the items awarded for the price bid.

FSA Contract Number: FSA26-EQU24.0 Equipment

Bidder Company Name: Mowermax Equipment Co.

Business Address: 6902 E 7th Ave Tampa FL 33619

Name of Authorized Agent: Arthur Ward

Email address of authorized agent: arthurw@mowermax.com

Signature: Signed by: Arthur Ward 80832A01B99F4AC...

Date: 9/24/2026

Docusign Envelope ID: 7CE0BF67-3DD2-834D-808D-3A5827721F4C

CONTRACT SIGNATURE FORM

By submitting a response to this Invitation to Bid and signing this form, the Bidder declares that he or she has read, and the company understands, accepts and will comply with the terms, conditions and specifications of this bid and any addenda issued. The failure or omission to review this document shall in no way relieve the authorized agent of obligations with respect to this bid. The submission of a bid and signature below shall be taken as evidence of acceptance of the terms and conditions of this bid.

The Bidder further declares that no other persons other than the authorized agent herein named has any interest in this bid or in the contract to be taken, and that it is made without any connection with any other person or persons making proposal for the same article, and is in all respects fair and without collusion or fraud.

The Bidder further declares that they have carefully examined the specifications and is thoroughly familiar with its provisions and with the quality, type and grade of materials required.

The Bidder further declares that they have provided a discount on all factory options included in this bid, and such discount will be included in all purchase orders.

The Bidder further declares that the company understands the financial responsibility associated with this bid as stated and further declares that it has the ability to meet the financial responsibility associated with this bid.

The Bidder further declares that the company will furnish the items awarded for the price bid.

FSA Contract Number: FSA26-EQU24.0 Equipment

Bidder Company Name: MWI Corporation/ dba MWI Pumps

Business Address: 33 NW 2nd Street St Deerfield Beach, FL 33441

Name of Authorized Agent: Sean Correia

Email address of authorized agent: SeanC@mwipumps.com

Signature: Signed by: Sean Correia 590DF13F07744B0...

Date: 9/23/2026

Docusign Envelope ID: 80B7B07D-0BFE-8AB7-81DA-6BBCC3D1D6E8

CONTRACT SIGNATURE FORM

By submitting a response to this Invitation to Bid and signing this form, the Bidder declares that he or she has read, and the company understands, accepts and will comply with the terms, conditions and specifications of this bid and any addenda issued. The failure or omission to review this document shall in no way relieve the authorized agent of obligations with respect to this bid. The submission of a bid and signature below shall be taken as evidence of acceptance of the terms and conditions of this bid.

The Bidder further declares that no other persons other than the authorized agent herein named has any interest in this bid or in the contract to be taken, and that it is made without any connection with any other person or persons making proposal for the same article, and is in all respects fair and without collusion or fraud.

The Bidder further declares that they have carefully examined the specifications and is thoroughly familiar with its provisions and with the quality, type and grade of materials required.

The Bidder further declares that they have provided a discount on all factory options included in this bid, and such discount will be included in all purchase orders.

The Bidder further declares that the company understands the financial responsibility associated with this bid as stated and further declares that it has the ability to meet the financial responsibility associated with this bid.

The Bidder further declares that the company will furnish the items awarded for the price bid.

FSA Contract Number: FSA26-EQU24.0 Equipment

Bidder Company Name: National Equipment Dealers, LLC

Business Address: 215 Woodside Dr. Lexington, NC 27292

Name of Authorized Agent: Brandon Dayvault

Email address of authorized agent: bdayvault@ned.us

Signature: Signed by: Brandon Dayvault E7D1A46912CB4E7...

Date: 9/23/2026

Docusign Envelope ID: 1F233EE0-7550-885E-835D-5F3B4BEA220A

CONTRACT SIGNATURE FORM

By submitting a response to this Invitation to Bid and signing this form, the Bidder declares that he or she has read, and the company understands, accepts and will comply with the terms, conditions and specifications of this bid and any addenda issued. The failure or omission to review this document shall in no way relieve the authorized agent of obligations with respect to this bid. The submission of a bid and signature below shall be taken as evidence of acceptance of the terms and conditions of this bid.

The Bidder further declares that no other persons other than the authorized agent herein named has any interest in this bid or in the contract to be taken, and that it is made without any connection with any other person or persons making proposal for the same article, and is in all respects fair and without collusion or fraud.

The Bidder further declares that they have carefully examined the specifications and is thoroughly familiar with its provisions and with the quality, type and grade of materials required.

The Bidder further declares that they have provided a discount on all factory options included in this bid, and such discount will be included in all purchase orders.

The Bidder further declares that the company understands the financial responsibility associated with this bid as stated and further declares that it has the ability to meet the financial responsibility associated with this bid.

The Bidder further declares that the company will furnish the items awarded for the price bid.

FSA Contract Number: FSA26-EQU24.0 Equipment

Bidder Company Name: robert siano

Business Address: national lift truck ser.

Name of Authorized Agent: Robert Siano

Email address of authorized agent: rsiano@nltsuperstore.com

Signature: DocuSigned by: Robert Siano 65B4E6F0FB7A42E...

Date: 9/28/2026

Docusign Envelope ID: 7B3D89A6-23B3-8E2B-8023-8912A24EB8C1

CONTRACT SIGNATURE FORM

By submitting a response to this Invitation to Bid and signing this form, the Bidder declares that he or she has read, and the company understands, accepts and will comply with the terms, conditions and specifications of this bid and any addenda issued. The failure or omission to review this document shall in no way relieve the authorized agent of obligations with respect to this bid. The submission of a bid and signature below shall be taken as evidence of acceptance of the terms and conditions of this bid.

The Bidder further declares that no other persons other than the authorized agent herein named has any interest in this bid or in the contract to be taken, and that it is made without any connection with any other person or persons making proposal for the same article, and is in all respects fair and without collusion or fraud.

The Bidder further declares that they have carefully examined the specifications and is thoroughly familiar with its provisions and with the quality, type and grade of materials required.

The Bidder further declares that they have provided a discount on all factory options included in this bid, and such discount will be included in all purchase orders.

The Bidder further declares that the company understands the financial responsibility associated with this bid as stated and further declares that it has the ability to meet the financial responsibility associated with this bid.

The Bidder further declares that the company will furnish the items awarded for the price bid.

FSA Contract Number: FSA26-EQU24.0 Equipment

Bidder Company Name: Nationwide Haul LLC

Business Address: 1500 W Cypress Creek Road, Fort Lauderdale, FL 33309

Name of Authorized Agent: Pablo Rodriquez

Email address of authorized agent: pablo@nationwidehaul.com

Signature: Signed by: Pablo Rodriquez DDA036600D2946A...

Date: 9/23/2026

Docusign Envelope ID: 1F815943-EF44-8440-80C5-8FA0CB972075

CONTRACT SIGNATURE FORM

By submitting a response to this Invitation to Bid and signing this form, the Bidder declares that he or she has read, and the company understands, accepts and will comply with the terms, conditions and specifications of this bid and any addenda issued. The failure or omission to review this document shall in no way relieve the authorized agent of obligations with respect to this bid. The submission of a bid and signature below shall be taken as evidence of acceptance of the terms and conditions of this bid.

The Bidder further declares that no other persons other than the authorized agent herein named has any interest in this bid or in the contract to be taken, and that it is made without any connection with any other person or persons making proposal for the same article, and is in all respects fair and without collusion or fraud.

The Bidder further declares that they have carefully examined the specifications and is thoroughly familiar with its provisions and with the quality, type and grade of materials required.

The Bidder further declares that they have provided a discount on all factory options included in this bid, and such discount will be included in all purchase orders.

The Bidder further declares that the company understands the financial responsibility associated with this bid as stated and further declares that it has the ability to meet the financial responsibility associated with this bid.

The Bidder further declares that the company will furnish the items awarded for the price bid.

FSA Contract Number: FSA26-EQU24.0 Equipment

Bidder Company Name: Ocala Tractor LLC

Business Address: 5841 n us hwy 441 Ocala, Fl 34475

Name of Authorized Agent: Shawn Sadler

Email address of authorized agent: Shawn.Sadler@ocalatractor.com

Signature: Signed by: Shawn Sadler D90F110F02FB439...

Date: 9/23/2026

Docusign Envelope ID: 028A44D1-08FC-8703-805E-36C031A8D6EA

CONTRACT SIGNATURE FORM

By submitting a response to this Invitation to Bid and signing this form, the Bidder declares that he or she has read, and the company understands, accepts and will comply with the terms, conditions and specifications of this bid and any addenda issued. The failure or omission to review this document shall in no way relieve the authorized agent of obligations with respect to this bid. The submission of a bid and signature below shall be taken as evidence of acceptance of the terms and conditions of this bid.

The Bidder further declares that no other persons other than the authorized agent herein named has any interest in this bid or in the contract to be taken, and that it is made without any connection with any other person or persons making proposal for the same article, and is in all respects fair and without collusion or fraud.

The Bidder further declares that they have carefully examined the specifications and is thoroughly familiar with its provisions and with the quality, type and grade of materials required.

The Bidder further declares that they have provided a discount on all factory options included in this bid, and such discount will be included in all purchase orders.

The Bidder further declares that the company understands the financial responsibility associated with this bid as stated and further declares that it has the ability to meet the financial responsibility associated with this bid.

The Bidder further declares that the company will furnish the items awarded for the price bid.

FSA Contract Number: FSA26-EQU24.0 Equipment

Bidder Company Name: OMJC Signal Inc

Business Address: 403 Chestnut St Waterloo IA 50703

Name of Authorized Agent: Tarah Dalziel

Email address of authorized agent: Sales@omjcsignal.com

Signature: Signed by: Tarah Dalziel 45A0A1E984C743C...

Date: 9/28/2026

Docusign Envelope ID: E31140C5-A201-81F3-8376-2F8F75D1B9F4

CONTRACT SIGNATURE FORM

By submitting a response to this Invitation to Bid and signing this form, the Bidder declares that he or she has read, and the company understands, accepts and will comply with the terms, conditions and specifications of this bid and any addenda issued. The failure or omission to review this document shall in no way relieve the authorized agent of obligations with respect to this bid. The submission of a bid and signature below shall be taken as evidence of acceptance of the terms and conditions of this bid.

The Bidder further declares that no other persons other than the authorized agent herein named has any interest in this bid or in the contract to be taken, and that it is made without any connection with any other person or persons making proposal for the same article, and is in all respects fair and without collusion or fraud.

The Bidder further declares that they have carefully examined the specifications and is thoroughly familiar with its provisions and with the quality, type and grade of materials required.

The Bidder further declares that they have provided a discount on all factory options included in this bid, and such discount will be included in all purchase orders.

The Bidder further declares that the company understands the financial responsibility associated with this bid as stated and further declares that it has the ability to meet the financial responsibility associated with this bid.

The Bidder further declares that the company will furnish the items awarded for the price bid.

FSA Contract Number: FSA26-EQU24.0 Equipment

Bidder Company Name: Pantropic Power

Business Address: 8205 NW 58th Street, Miami, FL 33166

Name of Authorized Agent: Greg Bennett

Email address of authorized agent: greg_bennett@pantropic.com

Signature: Signed by: Greg Bennett B4869C363D87468...

Date: 9/28/2026

Docusign Envelope ID: 8785EEDB-7FCC-84EB-826B-4BDBE2505FC4

CONTRACT SIGNATURE FORM

By submitting a response to this Invitation to Bid and signing this form, the Bidder declares that he or she has read, and the company understands, accepts and will comply with the terms, conditions and specifications of this bid and any addenda issued. The failure or omission to review this document shall in no way relieve the authorized agent of obligations with respect to this bid. The submission of a bid and signature below shall be taken as evidence of acceptance of the terms and conditions of this bid.

The Bidder further declares that no other persons other than the authorized agent herein named has any interest in this bid or in the contract to be taken, and that it is made without any connection with any other person or persons making proposal for the same article, and is in all respects fair and without collusion or fraud.

The Bidder further declares that they have carefully examined the specifications and is thoroughly familiar with its provisions and with the quality, type and grade of materials required.

The Bidder further declares that they have provided a discount on all factory options included in this bid, and such discount will be included in all purchase orders.

The Bidder further declares that the company understands the financial responsibility associated with this bid as stated and further declares that it has the ability to meet the financial responsibility associated with this bid.

The Bidder further declares that the company will furnish the items awarded for the price bid.

FSA Contract Number: FSA26-EQU24.0 Equipment

Bidder Company Name: Pat's Pump & Blower LLC

Business Address: 2141 West Church Street, Orlando, FL 32805

Name of Authorized Agent: Kevin Fender

Email address of authorized agent: Kfender@patspump.com

Signature: DocuSigned by: Kevin Fender 23F8B3ADE32941E...

Date: 9/23/2026

Docusign Envelope ID: 01AEEBAC-A43F-8AEB-828A-B354DF58DA88

CONTRACT SIGNATURE FORM

By submitting a response to this Invitation to Bid and signing this form, the Bidder declares that he or she has read, and the company understands, accepts and will comply with the terms, conditions and specifications of this bid and any addenda issued. The failure or omission to review this document shall in no way relieve the authorized agent of obligations with respect to this bid. The submission of a bid and signature below shall be taken as evidence of acceptance of the terms and conditions of this bid.

The Bidder further declares that no other persons other than the authorized agent herein named has any interest in this bid or in the contract to be taken, and that it is made without any connection with any other person or persons making proposal for the same article, and is in all respects fair and without collusion or fraud.

The Bidder further declares that they have carefully examined the specifications and is thoroughly familiar with its provisions and with the quality, type and grade of materials required.

The Bidder further declares that they have provided a discount on all factory options included in this bid, and such discount will be included in all purchase orders.

The Bidder further declares that the company understands the financial responsibility associated with this bid as stated and further declares that it has the ability to meet the financial responsibility associated with this bid.

The Bidder further declares that the company will furnish the items awarded for the price bid.

FSA Contract Number: FSA26-EQU24.0 Equipment

Bidder Company Name: Rechtien International Trucks, Inc.

Business Address: 7227 NW 74th Ave, Miami, FL 33166

Name of Authorized Agent: Carlos Currlin

Email address of authorized agent: ccurrlin@rechtien.com

Signature: DocuSigned by: Carlos Currlin 724847F9EBC643E...

Date: 9/24/2026

Docusign Envelope ID: 200CE804-4F46-86D1-821A-9A21C1F90D63

CONTRACT SIGNATURE FORM

By submitting a response to this Invitation to Bid and signing this form, the Bidder declares that he or she has read, and the company understands, accepts and will comply with the terms, conditions and specifications of this bid and any addenda issued. The failure or omission to review this document shall in no way relieve the authorized agent of obligations with respect to this bid. The submission of a bid and signature below shall be taken as evidence of acceptance of the terms and conditions of this bid.

The Bidder further declares that no other persons other than the authorized agent herein named has any interest in this bid or in the contract to be taken, and that it is made without any connection with any other person or persons making proposal for the same article, and is in all respects fair and without collusion or fraud.

The Bidder further declares that they have carefully examined the specifications and is thoroughly familiar with its provisions and with the quality, type and grade of materials required.

The Bidder further declares that they have provided a discount on all factory options included in this bid, and such discount will be included in all purchase orders.

The Bidder further declares that the company understands the financial responsibility associated with this bid as stated and further declares that it has the ability to meet the financial responsibility associated with this bid.

The Bidder further declares that the company will furnish the items awarded for the price bid.

FSA Contract Number: FSA26-EQU24.0 Equipment

Bidder Company Name: Right Trailers, Inc.

Business Address: 7220 US Hwy 98 N, Lakeland, FL 33809

Name of Authorized Agent: Michael Scott

Email address of authorized agent: righttrailers@aol.com

Signature: DocuSigned by: Michael Scott C261493351A94A5...

Date: 9/23/2026

Docusign Envelope ID: FF624A41-E330-805C-82A0-F87861537193

CONTRACT SIGNATURE FORM

By submitting a response to this Invitation to Bid and signing this form, the Bidder declares that he or she has read, and the company understands, accepts and will comply with the terms, conditions and specifications of this bid and any addenda issued. The failure or omission to review this document shall in no way relieve the authorized agent of obligations with respect to this bid. The submission of a bid and signature below shall be taken as evidence of acceptance of the terms and conditions of this bid.

The Bidder further declares that no other persons other than the authorized agent herein named has any interest in this bid or in the contract to be taken, and that it is made without any connection with any other person or persons making proposal for the same article, and is in all respects fair and without collusion or fraud.

The Bidder further declares that they have carefully examined the specifications and is thoroughly familiar with its provisions and with the quality, type and grade of materials required.

The Bidder further declares that they have provided a discount on all factory options included in this bid, and such discount will be included in all purchase orders.

The Bidder further declares that the company understands the financial responsibility associated with this bid as stated and further declares that it has the ability to meet the financial responsibility associated with this bid.

The Bidder further declares that the company will furnish the items awarded for the price bid.

FSA Contract Number: FSA26-EQU24.0 Equipment

Bidder Company Name: Ring Power Corporation

Business Address: 500 World Commerce Parkway St Augustine, FL 32092

Name of Authorized Agent: Alan Thomas

Email address of authorized agent: alan.thomas@ringpower.com

Signature: DocuSigned by: Alan Thomas 4F45797270AE4B9...

Date: 9/23/2026

Docusign Envelope ID: 95141F18-1E02-87E2-81C0-1E00097AF2DB

CONTRACT SIGNATURE FORM

By submitting a response to this Invitation to Bid and signing this form, the Bidder declares that he or she has read, and the company understands, accepts and will comply with the terms, conditions and specifications of this bid and any addenda issued. The failure or omission to review this document shall in no way relieve the authorized agent of obligations with respect to this bid. The submission of a bid and signature below shall be taken as evidence of acceptance of the terms and conditions of this bid.

The Bidder further declares that no other persons other than the authorized agent herein named has any interest in this bid or in the contract to be taken, and that it is made without any connection with any other person or persons making proposal for the same article, and is in all respects fair and without collusion or fraud.

The Bidder further declares that they have carefully examined the specifications and is thoroughly familiar with its provisions and with the quality, type and grade of materials required.

The Bidder further declares that they have provided a discount on all factory options included in this bid, and such discount will be included in all purchase orders.

The Bidder further declares that the company understands the financial responsibility associated with this bid as stated and further declares that it has the ability to meet the financial responsibility associated with this bid.

The Bidder further declares that the company will furnish the items awarded for the price bid.

FSA Contract Number: FSA26-EQU24.0 Equipment

Bidder Company Name: Segway of Central Florida

Business Address: 5454 Foliage Way; Ste B, Apopka, FL 32712

Name of Authorized Agent: John D Watson

Email address of authorized agent: dan@segwayofcentralflorida.com

Signature: Signed by: John D Watson 8F20D22BC211413...

Date: 9/28/2026

Docusign Envelope ID: 6F8E5452-1927-8751-805A-822CCF5BE47E

CONTRACT SIGNATURE FORM

By submitting a response to this Invitation to Bid and signing this form, the Bidder declares that he or she has read, and the company understands, accepts and will comply with the terms, conditions and specifications of this bid and any addenda issued. The failure or omission to review this document shall in no way relieve the authorized agent of obligations with respect to this bid. The submission of a bid and signature below shall be taken as evidence of acceptance of the terms and conditions of this bid.

The Bidder further declares that no other persons other than the authorized agent herein named has any interest in this bid or in the contract to be taken, and that it is made without any connection with any other person or persons making proposal for the same article, and is in all respects fair and without collusion or fraud.

The Bidder further declares that they have carefully examined the specifications and is thoroughly familiar with its provisions and with the quality, type and grade of materials required.

The Bidder further declares that they have provided a discount on all factory options included in this bid, and such discount will be included in all purchase orders.

The Bidder further declares that the company understands the financial responsibility associated with this bid as stated and further declares that it has the ability to meet the financial responsibility associated with this bid.

The Bidder further declares that the company will furnish the items awarded for the price bid.

FSA Contract Number: FSA26-EQU24.0 Equipment

Bidder Company Name: Shannon Chastain Enterprises, Inc / BASIC Equipment

Business Address: 185 Harmony Road, Eatonton, GA 31024

Name of Authorized Agent: Philicia Chastain

Email address of authorized agent: philicia@basicequipment.net

Signature: Signed by: Philicia Chastain 333748D06D51417...

Date: 9/23/2026

Docusign Envelope ID: B9882962-DCEC-8B5E-8011-ABD36B0154AB

CONTRACT SIGNATURE FORM

By submitting a response to this Invitation to Bid and signing this form, the Bidder declares that he or she has read, and the company understands, accepts and will comply with the terms, conditions and specifications of this bid and any addenda issued. The failure or omission to review this document shall in no way relieve the authorized agent of obligations with respect to this bid. The submission of a bid and signature below shall be taken as evidence of acceptance of the terms and conditions of this bid.

The Bidder further declares that no other persons other than the authorized agent herein named has any interest in this bid or in the contract to be taken, and that it is made without any connection with any other person or persons making proposal for the same article, and is in all respects fair and without collusion or fraud.

The Bidder further declares that they have carefully examined the specifications and is thoroughly familiar with its provisions and with the quality, type and grade of materials required.

The Bidder further declares that they have provided a discount on all factory options included in this bid, and such discount will be included in all purchase orders.

The Bidder further declares that the company understands the financial responsibility associated with this bid as stated and further declares that it has the ability to meet the financial responsibility associated with this bid.

The Bidder further declares that the company will furnish the items awarded for the price bid.

FSA Contract Number: FSA26-EQU24.0 Equipment

Bidder Company Name: SSES Inc dba Southern Sewer Equipment Sales

Business Address: 3409 Industrial 27th Street, Fort Pierce, FL, 34946

Name of Authorized Agent: Drew Denmon

Email address of authorized agent: Drew@southernsewer.com

Signature: Signed by: 9413A6FD6EBF456...

Date: 9/25/2026

Docusign Envelope ID: 1916EC56-0B32-819D-83B7-D9E215886450

CONTRACT SIGNATURE FORM

By submitting a response to this Invitation to Bid and signing this form, the Bidder declares that he or she has read, and the company understands, accepts and will comply with the terms, conditions and specifications of this bid and any addenda issued. The failure or omission to review this document shall in no way relieve the authorized agent of obligations with respect to this bid. The submission of a bid and signature below shall be taken as evidence of acceptance of the terms and conditions of this bid.

The Bidder further declares that no other persons other than the authorized agent herein named has any interest in this bid or in the contract to be taken, and that it is made without any connection with any other person or persons making proposal for the same article, and is in all respects fair and without collusion or fraud.

The Bidder further declares that they have carefully examined the specifications and is thoroughly familiar with its provisions and with the quality, type and grade of materials required.

The Bidder further declares that they have provided a discount on all factory options included in this bid, and such discount will be included in all purchase orders.

The Bidder further declares that the company understands the financial responsibility associated with this bid as stated and further declares that it has the ability to meet the financial responsibility associated with this bid.

The Bidder further declares that the company will furnish the items awarded for the price bid.

FSA Contract Number: FSA26-EQU24.0 Equipment

Bidder Company Name: Southern States Material Handling Inc. DBA Southern States ToyotaLift

Business Address: 115 South 78th Street Tampa FL 33619

Name of Authorized Agent: Shane Polson

Email address of authorized agent: spolson@sstlift.com

Signature: Signed by: Shane Polson BE9F9292C613471...

Date: 9/24/2026

Docusign Envelope ID: 2B67A906-B383-89FC-8116-FBAEED82B497

CONTRACT SIGNATURE FORM

By submitting a response to this Invitation to Bid and signing this form, the Bidder declares that he or she has read, and the company understands, accepts and will comply with the terms, conditions and specifications of this bid and any addenda issued. The failure or omission to review this document shall in no way relieve the authorized agent of obligations with respect to this bid. The submission of a bid and signature below shall be taken as evidence of acceptance of the terms and conditions of this bid.

The Bidder further declares that no other persons other than the authorized agent herein named has any interest in this bid or in the contract to be taken, and that it is made without any connection with any other person or persons making proposal for the same article, and is in all respects fair and without collusion or fraud.

The Bidder further declares that they have carefully examined the specifications and is thoroughly familiar with its provisions and with the quality, type and grade of materials required.

The Bidder further declares that they have provided a discount on all factory options included in this bid, and such discount will be included in all purchase orders.

The Bidder further declares that the company understands the financial responsibility associated with this bid as stated and further declares that it has the ability to meet the financial responsibility associated with this bid.

The Bidder further declares that the company will furnish the items awarded for the price bid.

FSA Contract Number: FSA26-EQU24.0 Equipment

Bidder Company Name: Sunbelt Waste Equipment, LLC

Business Address: 5701 N 50th Street, Tampa FL 33610

Name of Authorized Agent: Ryan Humphrey

Email address of authorized agent: rhumphrey@sunbeltwaste.com

Signature: Signed by: Ryan Humphrey C3E4C7E549384EB...

Date: 9/24/2026

Docusign Envelope ID: E0885E70-1F08-8498-8399-309E9BA1992A

CONTRACT SIGNATURE FORM

By submitting a response to this Invitation to Bid and signing this form, the Bidder declares that he or she has read, and the company understands, accepts and will comply with the terms, conditions and specifications of this bid and any addenda issued. The failure or omission to review this document shall in no way relieve the authorized agent of obligations with respect to this bid. The submission of a bid and signature below shall be taken as evidence of acceptance of the terms and conditions of this bid.

The Bidder further declares that no other persons other than the authorized agent herein named has any interest in this bid or in the contract to be taken, and that it is made without any connection with any other person or persons making proposal for the same article, and is in all respects fair and without collusion or fraud.

The Bidder further declares that they have carefully examined the specifications and is thoroughly familiar with its provisions and with the quality, type and grade of materials required.

The Bidder further declares that they have provided a discount on all factory options included in this bid, and such discount will be included in all purchase orders.

The Bidder further declares that the company understands the financial responsibility associated with this bid as stated and further declares that it has the ability to meet the financial responsibility associated with this bid.

The Bidder further declares that the company will furnish the items awarded for the price bid.

FSA Contract Number: FSA26-EQU24.0 Equipment

Bidder Company Name: Synergy Rents LLC DBA Opifex-Synergy

Business Address: 10117 Princess Palm Ave. Ste 500 Tampa FL 33610

Name of Authorized Agent: Brian Lenaghan

Email address of authorized agent: brian.lenaghan@opifex-synergy.com

Signature: Signed by: Brian Lenaghan 3D1285311B174E5...

Date: 9/24/2026

Docusign Envelope ID: 10D9D439-B37F-8971-828D-074222F2CACA

CONTRACT SIGNATURE FORM

By submitting a response to this Invitation to Bid and signing this form, the Bidder declares that he or she has read, and the company understands, accepts and will comply with the terms, conditions and specifications of this bid and any addenda issued. The failure or omission to review this document shall in no way relieve the authorized agent of obligations with respect to this bid. The submission of a bid and signature below shall be taken as evidence of acceptance of the terms and conditions of this bid.

The Bidder further declares that no other persons other than the authorized agent herein named has any interest in this bid or in the contract to be taken, and that it is made without any connection with any other person or persons making proposal for the same article, and is in all respects fair and without collusion or fraud.

The Bidder further declares that they have carefully examined the specifications and is thoroughly familiar with its provisions and with the quality, type and grade of materials required.

The Bidder further declares that they have provided a discount on all factory options included in this bid, and such discount will be included in all purchase orders.

The Bidder further declares that the company understands the financial responsibility associated with this bid as stated and further declares that it has the ability to meet the financial responsibility associated with this bid.

The Bidder further declares that the company will furnish the items awarded for the price bid.

FSA Contract Number: FSA26-EQU24.0 Equipment

Bidder Company Name: Taylor Power Systems

Business Address: 947 Industrial Park Dr

Name of Authorized Agent: Todd Johnston

Email address of authorized agent: toddj@taylorpower.com

Signature: Signed by: Todd Johnston 3E84A74D5D42491...

Date: 9/24/2026

Docusign Envelope ID: DD3D9273-6E3F-8664-814D-2E6BF775FDE1

CONTRACT SIGNATURE FORM

By submitting a response to this Invitation to Bid and signing this form, the Bidder declares that he or she has read, and the company understands, accepts and will comply with the terms, conditions and specifications of this bid and any addenda issued. The failure or omission to review this document shall in no way relieve the authorized agent of obligations with respect to this bid. The submission of a bid and signature below shall be taken as evidence of acceptance of the terms and conditions of this bid.

The Bidder further declares that no other persons other than the authorized agent herein named has any interest in this bid or in the contract to be taken, and that it is made without any connection with any other person or persons making proposal for the same article, and is in all respects fair and without collusion or fraud.

The Bidder further declares that they have carefully examined the specifications and is thoroughly familiar with its provisions and with the quality, type and grade of materials required.

The Bidder further declares that they have provided a discount on all factory options included in this bid, and such discount will be included in all purchase orders.

The Bidder further declares that the company understands the financial responsibility associated with this bid as stated and further declares that it has the ability to meet the financial responsibility associated with this bid.

The Bidder further declares that the company will furnish the items awarded for the price bid.

FSA Contract Number: FSA26-EQU24.0 Equipment

Bidder Company Name: Texas Trailers Sales and Service

Business Address: 5601 NW 13th St. Gainesville, FL 32653

Name of Authorized Agent: Rick Croft

Email address of authorized agent: rick@texastrailersfl.com

Signature: Signed by: Rick Croft B79D42E8FD13438...

Date: 9/23/2026

Docusign Envelope ID: 92F19C6C-B6A5-8454-80B0-1E6874705878

CONTRACT SIGNATURE FORM

By submitting a response to this Invitation to Bid and signing this form, the Bidder declares that he or she has read, and the company understands, accepts and will comply with the terms, conditions and specifications of this bid and any addenda issued. The failure or omission to review this document shall in no way relieve the authorized agent of obligations with respect to this bid. The submission of a bid and signature below shall be taken as evidence of acceptance of the terms and conditions of this bid.

The Bidder further declares that no other persons other than the authorized agent herein named has any interest in this bid or in the contract to be taken, and that it is made without any connection with any other person or persons making proposal for the same article, and is in all respects fair and without collusion or fraud.

The Bidder further declares that they have carefully examined the specifications and is thoroughly familiar with its provisions and with the quality, type and grade of materials required.

The Bidder further declares that they have provided a discount on all factory options included in this bid, and such discount will be included in all purchase orders.

The Bidder further declares that the company understands the financial responsibility associated with this bid as stated and further declares that it has the ability to meet the financial responsibility associated with this bid.

The Bidder further declares that the company will furnish the items awarded for the price bid.

FSA Contract Number: FSA26-EQU24.0 Equipment

Bidder Company Name: Texas Underground, Inc.

Business Address: 1617 Garden Rd, Pearland, TX 77581

Name of Authorized Agent: Stan Stoneman

Email address of authorized agent: stan@pipehunter.com

Signature: DocuSigned by: Stan Stoneman A0000A3C60344ED...

Date: 9/23/2026

Docusign Envelope ID: BF762A82-D32A-8446-82C5-C54F204EB130

CONTRACT SIGNATURE FORM

By submitting a response to this Invitation to Bid and signing this form, the Bidder declares that he or she has read, and the company understands, accepts and will comply with the terms, conditions and specifications of this bid and any addenda issued. The failure or omission to review this document shall in no way relieve the authorized agent of obligations with respect to this bid. The submission of a bid and signature below shall be taken as evidence of acceptance of the terms and conditions of this bid.

The Bidder further declares that no other persons other than the authorized agent herein named has any interest in this bid or in the contract to be taken, and that it is made without any connection with any other person or persons making proposal for the same article, and is in all respects fair and without collusion or fraud.

The Bidder further declares that they have carefully examined the specifications and is thoroughly familiar with its provisions and with the quality, type and grade of materials required.

The Bidder further declares that they have provided a discount on all factory options included in this bid, and such discount will be included in all purchase orders.

The Bidder further declares that the company understands the financial responsibility associated with this bid as stated and further declares that it has the ability to meet the financial responsibility associated with this bid.

The Bidder further declares that the company will furnish the items awarded for the price bid.

FSA Contract Number: FSA26-EQU24.0 Equipment

Bidder Company Name: Thompson Pump and Manufacturing Company Inc.

Business Address: 4620 City Center Drive, Port Orange, FL 32129

Name of Authorized Agent: David Perry

Email address of authorized agent: dperry@thompsonpump.com

Signature: Signed by: D723BBC6D2C5435...

Date: 9/30/2026

Docusign Envelope ID: 00E00184-54F3-8BE8-8185-E79A8FF79110

CONTRACT SIGNATURE FORM

By submitting a response to this Invitation to Bid and signing this form, the Bidder declares that he or she has read, and the company understands, accepts and will comply with the terms, conditions and specifications of this bid and any addenda issued. The failure or omission to review this document shall in no way relieve the authorized agent of obligations with respect to this bid. The submission of a bid and signature below shall be taken as evidence of acceptance of the terms and conditions of this bid.

The Bidder further declares that no other persons other than the authorized agent herein named has any interest in this bid or in the contract to be taken, and that it is made without any connection with any other person or persons making proposal for the same article, and is in all respects fair and without collusion or fraud.

The Bidder further declares that they have carefully examined the specifications and is thoroughly familiar with its provisions and with the quality, type and grade of materials required.

The Bidder further declares that they have provided a discount on all factory options included in this bid, and such discount will be included in all purchase orders.

The Bidder further declares that the company understands the financial responsibility associated with this bid as stated and further declares that it has the ability to meet the financial responsibility associated with this bid.

The Bidder further declares that the company will furnish the items awarded for the price bid.

FSA Contract Number: FSA26-EQU24.0 Equipment

Bidder Company Name: Tom Evans Environmental, Inc.

Business Address: 3200 Flightline Drive, Suite 302; Lakeland, FL 33811

Name of Authorized Agent: Dennis Szczepanek

Email address of authorized agent: ds@tomevans.com

Signature: Signed by: A3E1018019644B4...

Date: 9/23/2026

Docusign Envelope ID: 1C2CF55D-30BD-81C3-833D-55CD7451105C

CONTRACT SIGNATURE FORM

By submitting a response to this Invitation to Bid and signing this form, the Bidder declares that he or she has read, and the company understands, accepts and will comply with the terms, conditions and specifications of this bid and any addenda issued. The failure or omission to review this document shall in no way relieve the authorized agent of obligations with respect to this bid. The submission of a bid and signature below shall be taken as evidence of acceptance of the terms and conditions of this bid.

The Bidder further declares that no other persons other than the authorized agent herein named has any interest in this bid or in the contract to be taken, and that it is made without any connection with any other person or persons making proposal for the same article, and is in all respects fair and without collusion or fraud.

The Bidder further declares that they have carefully examined the specifications and is thoroughly familiar with its provisions and with the quality, type and grade of materials required.

The Bidder further declares that they have provided a discount on all factory options included in this bid, and such discount will be included in all purchase orders.

The Bidder further declares that the company understands the financial responsibility associated with this bid as stated and further declares that it has the ability to meet the financial responsibility associated with this bid.

The Bidder further declares that the company will furnish the items awarded for the price bid.

FSA Contract Number: FSA26-EQU24.0 Equipment

Bidder Company Name: Tradewinds Power Corp

Business Address: 5820 NW 84th Avenue, Miami, FL. 33166

Name of Authorized Agent: Juan Monreal

Email address of authorized agent: juanm@tradewindspower.com

Signature: Signed by: Juan Monreal B8FA415D53EA4EE...

Date: 9/23/2026

Docusign Envelope ID: 2AA9AD47-72AB-8E55-8063-7A617B81D5ED

CONTRACT SIGNATURE FORM

By submitting a response to this Invitation to Bid and signing this form, the Bidder declares that he or she has read, and the company understands, accepts and will comply with the terms, conditions and specifications of this bid and any addenda issued. The failure or omission to review this document shall in no way relieve the authorized agent of obligations with respect to this bid. The submission of a bid and signature below shall be taken as evidence of acceptance of the terms and conditions of this bid.

The Bidder further declares that no other persons other than the authorized agent herein named has any interest in this bid or in the contract to be taken, and that it is made without any connection with any other person or persons making proposal for the same article, and is in all respects fair and without collusion or fraud.

The Bidder further declares that they have carefully examined the specifications and is thoroughly familiar with its provisions and with the quality, type and grade of materials required.

The Bidder further declares that they have provided a discount on all factory options included in this bid, and such discount will be included in all purchase orders.

The Bidder further declares that the company understands the financial responsibility associated with this bid as stated and further declares that it has the ability to meet the financial responsibility associated with this bid.

The Bidder further declares that the company will furnish the items awarded for the price bid.

FSA Contract Number: FSA26-EQU24.0 Equipment

Bidder Company Name: Travis Trailers

Business Address: 13955 FM 529 Houston, TX 77041

Name of Authorized Agent: Ricardo Aguinaga

Email address of authorized agent: rpaguinaga@travistrailers.com

Signature: Signed by: Ricardo Aguinaga 2A030DBF6F704EE...

Date: 9/23/2026

Docusign Envelope ID: C814DD09-993E-876A-81F6-5579CB50E59A

CONTRACT SIGNATURE FORM

By submitting a response to this Invitation to Bid and signing this form, the Bidder declares that he or she has read, and the company understands, accepts and will comply with the terms, conditions and specifications of this bid and any addenda issued. The failure or omission to review this document shall in no way relieve the authorized agent of obligations with respect to this bid. The submission of a bid and signature below shall be taken as evidence of acceptance of the terms and conditions of this bid.

The Bidder further declares that no other persons other than the authorized agent herein named has any interest in this bid or in the contract to be taken, and that it is made without any connection with any other person or persons making proposal for the same article, and is in all respects fair and without collusion or fraud.

The Bidder further declares that they have carefully examined the specifications and is thoroughly familiar with its provisions and with the quality, type and grade of materials required.

The Bidder further declares that they have provided a discount on all factory options included in this bid, and such discount will be included in all purchase orders.

The Bidder further declares that the company understands the financial responsibility associated with this bid as stated and further declares that it has the ability to meet the financial responsibility associated with this bid.

The Bidder further declares that the company will furnish the items awarded for the price bid.

FSA Contract Number: FSA26-EQU24.0 Equipment

Bidder Company Name: Vermeer Southeast

Business Address: 428 Ocoee Apopka Rd, Ocoee, FL 34761

Name of Authorized Agent: Dan Rockefeller

Email address of authorized agent: danrockefeller@VermeerSoutheast.com

Signature: Signed by: Dan Rockefeller D1E64352EC6A40D...

Date: 9/29/2026

Docusign Envelope ID: 0092790D-99FF-8E14-81A6-CD0FD281170B

CONTRACT SIGNATURE FORM

By submitting a response to this Invitation to Bid and signing this form, the Bidder declares that he or she has read, and the company understands, accepts and will comply with the terms, conditions and specifications of this bid and any addenda issued. The failure or omission to review this document shall in no way relieve the authorized agent of obligations with respect to this bid. The submission of a bid and signature below shall be taken as evidence of acceptance of the terms and conditions of this bid.

The Bidder further declares that no other persons other than the authorized agent herein named has any interest in this bid or in the contract to be taken, and that it is made without any connection with any other person or persons making proposal for the same article, and is in all respects fair and without collusion or fraud.

The Bidder further declares that they have carefully examined the specifications and is thoroughly familiar with its provisions and with the quality, type and grade of materials required.

The Bidder further declares that they have provided a discount on all factory options included in this bid, and such discount will be included in all purchase orders.

The Bidder further declares that the company understands the financial responsibility associated with this bid as stated and further declares that it has the ability to meet the financial responsibility associated with this bid.

The Bidder further declares that the company will furnish the items awarded for the price bid.

FSA Contract Number: FSA26-EQU24.0 Equipment

Bidder Company Name: Vetted Security Solutions LLC

Business Address: 4185 35th St. N., St. Petersburg, FL 33714

Name of Authorized Agent: Lori Hipskind

Email address of authorized agent: lhipskind@vettedsecurity.com

Signature: Signed by: Lori Hipskind FFCBDDFCE46F48B...

Date: 9/25/2026

Docusign Envelope ID: 8EBDA96B-B056-85FD-8232-4CB0CB19C6AD

CONTRACT SIGNATURE FORM

By submitting a response to this Invitation to Bid and signing this form, the Bidder declares that he or she has read, and the company understands, accepts and will comply with the terms, conditions and specifications of this bid and any addenda issued. The failure or omission to review this document shall in no way relieve the authorized agent of obligations with respect to this bid. The submission of a bid and signature below shall be taken as evidence of acceptance of the terms and conditions of this bid.

The Bidder further declares that no other persons other than the authorized agent herein named has any interest in this bid or in the contract to be taken, and that it is made without any connection with any other person or persons making proposal for the same article, and is in all respects fair and without collusion or fraud.

The Bidder further declares that they have carefully examined the specifications and is thoroughly familiar with its provisions and with the quality, type and grade of materials required.

The Bidder further declares that they have provided a discount on all factory options included in this bid, and such discount will be included in all purchase orders.

The Bidder further declares that the company understands the financial responsibility associated with this bid as stated and further declares that it has the ability to meet the financial responsibility associated with this bid.

The Bidder further declares that the company will furnish the items awarded for the price bid.

FSA Contract Number: FSA26-EQU24.0 Equipment

Bidder Company Name: Warren Equipment Inc

Business Address: 2299 US 92 E Plant City FL 33563

Name of Authorized Agent: Robert Flavin

Email address of authorized agent: rflavin@warrentrailers.com

Signature: Signed by: Robert Flavin A736E011AFC04C6...

Date: 9/28/2026

Docusign Envelope ID: 73DCEAF9-4F06-8F0C-8080-2116608BBDAF

CONTRACT SIGNATURE FORM

By submitting a response to this Invitation to Bid and signing this form, the Bidder declares that he or she has read, and the company understands, accepts and will comply with the terms, conditions and specifications of this bid and any addenda issued. The failure or omission to review this document shall in no way relieve the authorized agent of obligations with respect to this bid. The submission of a bid and signature below shall be taken as evidence of acceptance of the terms and conditions of this bid.

The Bidder further declares that no other persons other than the authorized agent herein named has any interest in this bid or in the contract to be taken, and that it is made without any connection with any other person or persons making proposal for the same article, and is in all respects fair and without collusion or fraud.

The Bidder further declares that they have carefully examined the specifications and is thoroughly familiar with its provisions and with the quality, type and grade of materials required.

The Bidder further declares that they have provided a discount on all factory options included in this bid, and such discount will be included in all purchase orders.

The Bidder further declares that the company understands the financial responsibility associated with this bid as stated and further declares that it has the ability to meet the financial responsibility associated with this bid.

The Bidder further declares that the company will furnish the items awarded for the price bid.

FSA Contract Number: FSA26-EQU24.0 Equipment

Bidder Company Name: Xylem Dewatering Solutions, Inc.

Business Address: 84 Floodgate Road, Bridgeport, NJ 08014

Name of Authorized Agent: Natalie Sacco

Email address of authorized agent: FSA@xylem.com

Signature: Signed by: Natalie Sacco 3E8C0FBC6E8F408...

Date: 9/28/2026

FSA Cooperative Purchasing Program

FLORIDA
SHERIFFS ASSOCIATION
COOPERATIVE
PURCHASING PROGRAM

FSA26-EQU24.0: Equipment
How to Order

How to Purchase



FSA Cooperative Purchasing Program



FSA26-EQU24.0: Equipment
Award Links

#	Group	Make	Model	Model #	Link
1	All Terrain & Utility Vehicles: All Terrain Vehicles (Quad)	CanAm	Outlander	500	https://www.myvendorlink.com/external/award?s=196709&i=1
2	All Terrain & Utility Vehicles: All Terrain Vehicles (Quad)	CFMOTO	CFORCE 500	CFORCE 500	https://www.myvendorlink.com/external/award?s=196709&i=2
3	All Terrain & Utility Vehicles: All Terrain Vehicles (Quad)	Honda	Rancher 420	TRX420FA6	https://www.myvendorlink.com/external/award?s=196709&i=3
4	All Terrain & Utility Vehicles: All Terrain Vehicles (Quad)	Honda	Rubicon 520	TRX520FA6	https://www.myvendorlink.com/external/award?s=196709&i=4
5	All Terrain & Utility Vehicles: All Terrain Vehicles (Quad)	Polaris	Sportsman 500	A27SBA50B1	https://www.myvendorlink.com/external/award?s=196709&i=5
6	All Terrain & Utility Vehicles: All Terrain Vehicles (Quad)	Polaris	Sportsman 600	A27SEA57A1	https://www.myvendorlink.com/external/award?s=196709&i=6
7	All Terrain & Utility Vehicles: All Terrain Vehicles (Quad)	Suzuki	King Quad 400 ASI	LTA400FM7	https://www.myvendorlink.com/external/award?s=196709&i=7
8	All Terrain & Utility Vehicles: All Terrain Vehicles (Quad)	Yamaha	Kodiac 450	YFM45KDXVG	https://www.myvendorlink.com/external/award?s=196709&i=8
9	All Terrain & Utility Vehicles: Electric Utility Vehicles (Side-by-Side)	Columbia	Utilitruck	Utilitruck	https://www.myvendorlink.com/external/award?s=196709&i=9
13	All Terrain & Utility Vehicles: Electric Utility Vehicles (Side-by-Side)	Landmaster	Amp	CA00143	https://www.myvendorlink.com/external/award?s=196709&i=13
14	All Terrain & Utility Vehicles: Utility Vehicles (Side-by-Side)	Bobcat	UV34	UV34	https://www.myvendorlink.com/external/award?s=196709&i=14
15	All Terrain & Utility Vehicles: Utility Vehicles (Side-by-Side)	Bobcat	UW56	UW56	https://www.myvendorlink.com/external/award?s=196709&i=15
16	All Terrain & Utility Vehicles: Utility Vehicles (Side-by-Side)	CanAm	Defender	HD7	https://www.myvendorlink.com/external/award?s=196709&i=16
17	All Terrain & Utility Vehicles: Utility Vehicles (Side-by-Side)	CFMOTO	UFORCE 600	UFORCE 600	https://www.myvendorlink.com/external/award?s=196709&i=17
18	All Terrain & Utility Vehicles: Utility Vehicles (Side-by-Side)	Honda	Pioneer 520	SXS520M2	https://www.myvendorlink.com/external/award?s=196709&i=18
19	All Terrain & Utility Vehicles: Utility Vehicles (Side-by-Side)	Honda	Pioneer 700	SXS700M2M	https://www.myvendorlink.com/external/award?s=196709&i=19
20	All Terrain & Utility Vehicles: Utility Vehicles (Side-by-Side)	John Deere	Gator	HPX615E	https://www.myvendorlink.com/external/award?s=196709&i=20
21	All Terrain & Utility Vehicles: Utility Vehicles (Side-by-Side)	Kawasaki	Mule 4x4	4010	https://www.myvendorlink.com/external/award?s=196709&i=21
22	All Terrain & Utility Vehicles: Utility Vehicles (Side-by-Side)	Kubota	RTVX2	RTVX2-BKH-1	https://www.myvendorlink.com/external/award?s=196709&i=22
23	All Terrain & Utility Vehicles: Utility Vehicles (Side-by-Side)	Landmaster	N7	CA00135	https://www.myvendorlink.com/external/award?s=196709&i=23
25	All Terrain & Utility Vehicles: Utility Vehicles (Side-by-Side)	Polaris	Pro XD Mid-Size	D27M2A57B4	https://www.myvendorlink.com/external/award?s=196709&i=25
26	All Terrain & Utility Vehicles: Utility Vehicles (Side-by-Side)	Polaris	Ranger 600	R27MAA57B8	https://www.myvendorlink.com/external/award?s=196709&i=26
28	Blower: Ride On Blower	Scag	Windstorm	WS23-37BV-EFI	https://www.myvendorlink.com/external/award?s=196709&i=28
32	Bulldozer: 180hp	Case	2050M	2050M	https://www.myvendorlink.com/external/award?s=196709&i=32
33	Bulldozer: 180hp	Caterpillar	D6	D6	https://www.myvendorlink.com/external/award?s=196709&i=33
34	Bulldozer: 180hp	John Deere	850P	850P	https://www.myvendorlink.com/external/award?s=196709&i=34
35	Bulldozer: 180hp	Liebherr	PR736	PR736	https://www.myvendorlink.com/external/award?s=196709&i=35
36	Bulldozer: 70hp	Case	650M	650M	https://www.myvendorlink.com/external/award?s=196709&i=36
37	Bulldozer: 70hp	Caterpillar	D1	D1	https://www.myvendorlink.com/external/award?s=196709&i=37
38	Bulldozer: 70hp	John Deere	450P	450P	https://www.myvendorlink.com/external/award?s=196709&i=38
39	Bulldozer: 90hp	Case	850M	850M	https://www.myvendorlink.com/external/award?s=196709&i=39
40	Bulldozer: 90hp	Caterpillar	D2	D2	https://www.myvendorlink.com/external/award?s=196709&i=40
41	Bulldozer: 90hp	DEVELON	DD100	DD100	https://www.myvendorlink.com/external/award?s=196709&i=41
42	Bulldozer: 90hp	John Deere	550P	550P	https://www.myvendorlink.com/external/award?s=196709&i=42
43	Chipper: Brush Chipper	Bandit	Intimidator	15XP	https://www.myvendorlink.com/external/award?s=196709&i=43
44	Chipper: Brush Chipper	Vermeer	BC1500	BC1500	https://www.myvendorlink.com/external/award?s=196709&i=44
46	Compactor: 80,000 lbs. Landfill Compactor	Caterpillar	826	826	https://www.myvendorlink.com/external/award?s=196709&i=46
47	Compactor: 80,000 lbs. Landfill Compactor	Tana	H380	H380	https://www.myvendorlink.com/external/award?s=196709&i=47
48	Compactor: 80,000 lbs. Landfill Compactor	Volvo	LC450	LC450	https://www.myvendorlink.com/external/award?s=196709&i=48
49	Compressor: Air Compressor - Trailer Mounted	Atlas Copco	XAS 188 T4F	XAS 188 T4F	https://www.myvendorlink.com/external/award?s=196709&i=49
50	Compressor: Air Compressor - Trailer Mounted	Bobcat	PA185VWDO-T4F	PA185VWDO-T4F	https://www.myvendorlink.com/external/award?s=196709&i=50
53	Compressor: Air Compressor - Trailer Mounted	Sullair	185 T4F	185 T4F	https://www.myvendorlink.com/external/award?s=196709&i=53
54	Compressor: Air Compressor - Trailer Mounted	Sullivan Palatek	D185P	D185P	https://www.myvendorlink.com/external/award?s=196709&i=54
55	Dump Truck: Articulating Off Road Dump Truck - 50,000 lbs. Payload	Bell	B25E	B25E	https://www.myvendorlink.com/external/award?s=196709&i=55
56	Dump Truck: Articulating Off Road Dump Truck - 50,000 lbs. Payload	Caterpillar	725	725	https://www.myvendorlink.com/external/award?s=196709&i=56
57	Dump Truck: Articulating Off Road Dump Truck - 50,000 lbs. Payload	DEVELON	DA30-5	DA30-5	https://www.myvendorlink.com/external/award?s=196709&i=57
58	Dump Truck: Articulating Off Road Dump Truck - 50,000 lbs. Payload	John Deere	260P	260P	https://www.myvendorlink.com/external/award?s=196709&i=58
59	Dump Truck: Articulating Off Road Dump Truck - 50,000 lbs. Payload	Liebherr	TA230	TA230	https://www.myvendorlink.com/external/award?s=196709&i=59
61	Dump Truck: Articulating Off Road Dump Truck - 50,000 lbs. Payload	Volvo	A25	A25	https://www.myvendorlink.com/external/award?s=196709&i=61
62	Excavator: All Terrain Walking Excavator	Euromach	R1055	R1055	https://www.myvendorlink.com/external/award?s=196709&i=62
63	Excavator: All Terrain Walking Excavator	Kaiser	S8	S8	https://www.myvendorlink.com/external/award?s=196709&i=63
64	Excavator: All Terrain Walking Excavator	Menzi Muck	M425X	M425X	https://www.myvendorlink.com/external/award?s=196709&i=64
65	Excavator: Hydraulic Excavator - 15,590 lbs. Operating Weight	Bobcat	E88	E88	https://www.myvendorlink.com/external/award?s=196709&i=65
66	Excavator: Hydraulic Excavator - 15,590 lbs. Operating Weight	Case	CX80C	CX80C	https://www.myvendorlink.com/external/award?s=196709&i=66
67	Excavator: Hydraulic Excavator - 15,590 lbs. Operating Weight	Caterpillar	308	308	https://www.myvendorlink.com/external/award?s=196709&i=67
68	Excavator: Hydraulic Excavator - 15,590 lbs. Operating Weight	DEVELON	DX89R-7	DX89R-7	https://www.myvendorlink.com/external/award?s=196709&i=68
69	Excavator: Hydraulic Excavator - 15,590 lbs. Operating Weight	Hitachi	ZX75US	ZX75US	https://www.myvendorlink.com/external/award?s=196709&i=69
70	Excavator: Hydraulic Excavator - 15,590 lbs. Operating Weight	Hyundai	HX90A	HX90A	https://www.myvendorlink.com/external/award?s=196709&i=70
71	Excavator: Hydraulic Excavator - 15,590 lbs. Operating Weight	John Deere	75P	75P	https://www.myvendorlink.com/external/award?s=196709&i=71
72	Excavator: Hydraulic Excavator - 15,590 lbs. Operating Weight	Kubota	KX080-5R3	KX080-5R3	https://www.myvendorlink.com/external/award?s=196709&i=72
73	Excavator: Hydraulic Excavator - 15,590 lbs. Operating Weight	Link-Belt	75X3	75X3	https://www.myvendorlink.com/external/award?s=196709&i=73
75	Excavator: Hydraulic Excavator - 15,590 lbs. Operating Weight	New Holland	Midi Excavator	E70D	https://www.myvendorlink.com/external/award?s=196709&i=75
77	Excavator: Hydraulic Excavator - 15,590 lbs. Operating Weight	Takeuchi	TB290	TB290	https://www.myvendorlink.com/external/award?s=196709&i=77
78	Excavator: Hydraulic Excavator - 15,590 lbs. Operating Weight	Volvo	ECR90	ECR90	https://www.myvendorlink.com/external/award?s=196709&i=78
79	Excavator: Hydraulic Excavator - 15,590 lbs. Operating Weight	Yanmar	Vi080-7	Vi080-7	https://www.myvendorlink.com/external/award?s=196709&i=79
80	Excavator: Hydraulic Excavator - 38,000 lbs. Operating Weight	Bobcat	E165	E165	https://www.myvendorlink.com/external/award?s=196709&i=80

81	Excavator: Hydraulic Excavator - 38,000 lbs. Operating Weight	Case	CX170E	CX170E	https://www.myvendorlink.com/external/award?s=196709&i=81
82	Excavator: Hydraulic Excavator - 38,000 lbs. Operating Weight	Caterpillar	317 GC	317 GC	https://www.myvendorlink.com/external/award?s=196709&i=82
83	Excavator: Hydraulic Excavator - 38,000 lbs. Operating Weight	DEVELON	DX170LC-7	DX170LC-7	https://www.myvendorlink.com/external/award?s=196709&i=83
84	Excavator: Hydraulic Excavator - 38,000 lbs. Operating Weight	Hitachi	ZX160LC	ZX160LC	https://www.myvendorlink.com/external/award?s=196709&i=84
85	Excavator: Hydraulic Excavator - 38,000 lbs. Operating Weight	Hyundai	HX160AL	HX160AL	https://www.myvendorlink.com/external/award?s=196709&i=85
86	Excavator: Hydraulic Excavator - 38,000 lbs. Operating Weight	John Deere	160P	160P	https://www.myvendorlink.com/external/award?s=196709&i=86
88	Excavator: Hydraulic Excavator - 38,000 lbs. Operating Weight	Link-Belt	170X4	170X4	https://www.myvendorlink.com/external/award?s=196709&i=88
90	Excavator: Hydraulic Excavator - 38,000 lbs. Operating Weight	Volvo	EC160	EC160	https://www.myvendorlink.com/external/award?s=196709&i=90
91	Excavator: Hydraulic Excavator - 76,550 lbs. Operating Weight	Case	CX350D	CX350D	https://www.myvendorlink.com/external/award?s=196709&i=91
92	Excavator: Hydraulic Excavator - 76,550 lbs. Operating Weight	Caterpillar	336	336	https://www.myvendorlink.com/external/award?s=196709&i=92
93	Excavator: Hydraulic Excavator - 76,550 lbs. Operating Weight	DEVELON	DX350LC-7	DX350LC-7	https://www.myvendorlink.com/external/award?s=196709&i=93
94	Excavator: Hydraulic Excavator - 76,550 lbs. Operating Weight	Hitachi	ZX350	ZX350	https://www.myvendorlink.com/external/award?s=196709&i=94
96	Excavator: Hydraulic Excavator - 76,550 lbs. Operating Weight	Hyundai	HX350AL	HX350AL	https://www.myvendorlink.com/external/award?s=196709&i=96
97	Excavator: Hydraulic Excavator - 76,550 lbs. Operating Weight	John Deere	350P	350P	https://www.myvendorlink.com/external/award?s=196709&i=97
99	Excavator: Hydraulic Excavator - 76,550 lbs. Operating Weight	Link-Belt	370X4	370X4	https://www.myvendorlink.com/external/award?s=196709&i=99
101	Excavator: Hydraulic Excavator - 76,550 lbs. Operating Weight	Volvo	EC370	EC370	https://www.myvendorlink.com/external/award?s=196709&i=101
102	Excavator: Mini Hydraulic Excavator - 7,105 lbs. Operating Weight	Bobcat	E32	E32	https://www.myvendorlink.com/external/award?s=196709&i=102
103	Excavator: Mini Hydraulic Excavator - 7,105 lbs. Operating Weight	Case	CX37C	CX37C	https://www.myvendorlink.com/external/award?s=196709&i=103
104	Excavator: Mini Hydraulic Excavator - 7,105 lbs. Operating Weight	Caterpillar	303	303	https://www.myvendorlink.com/external/award?s=196709&i=104
105	Excavator: Mini Hydraulic Excavator - 7,105 lbs. Operating Weight	DEVELON	DX35Z-7	DX35Z-7	https://www.myvendorlink.com/external/award?s=196709&i=105
106	Excavator: Mini Hydraulic Excavator - 7,105 lbs. Operating Weight	Hitachi	ZX35-U	ZX35-U	https://www.myvendorlink.com/external/award?s=196709&i=106
107	Excavator: Mini Hydraulic Excavator - 7,105 lbs. Operating Weight	Hyundai	HX35AZ	HX35AZ	https://www.myvendorlink.com/external/award?s=196709&i=107
108	Excavator: Mini Hydraulic Excavator - 7,105 lbs. Operating Weight	John Deere	35P	35P	https://www.myvendorlink.com/external/award?s=196709&i=108
109	Excavator: Mini Hydraulic Excavator - 7,105 lbs. Operating Weight	Kubota	U35	U35-4R1	https://www.myvendorlink.com/external/award?s=196709&i=109
110	Excavator: Mini Hydraulic Excavator - 7,105 lbs. Operating Weight	New Holland	Compact Excavator	E37C	https://www.myvendorlink.com/external/award?s=196709&i=110
112	Excavator: Mini Hydraulic Excavator - 7,105 lbs. Operating Weight	Takeuchi	TB240	TB240	https://www.myvendorlink.com/external/award?s=196709&i=112
113	Excavator: Mini Hydraulic Excavator - 7,105 lbs. Operating Weight	Volvo	EC37	EC37	https://www.myvendorlink.com/external/award?s=196709&i=113
114	Excavator: Mini Hydraulic Excavator - 7,105 lbs. Operating Weight	Yanmar	Vi035-7	Vi035-7	https://www.myvendorlink.com/external/award?s=196709&i=114
115	Excavator: Telescopic Excavator - 45,000 lbs. Operating Weight - Tracked Type	Gradall	XL4200	XL4200	https://www.myvendorlink.com/external/award?s=196709&i=115
116	Excavator: Telescopic Excavator - 47,000 lbs. Operating Weight - 6x6 Wheeled Type	Gradall	XL4100	XL4100	https://www.myvendorlink.com/external/award?s=196709&i=116
118	Excavator: Vacuum Excavator - Trailer Mounted	Truvac	TRXX	TRXX 800	https://www.myvendorlink.com/external/award?s=196709&i=118
119	Excavator: Vacuum Excavator - Trailer Mounted	Vac-Con	Mudslinger	MS800	https://www.myvendorlink.com/external/award?s=196709&i=119
120	Excavator: Vacuum Excavator - Trailer Mounted	Vermeer	LP873SDT	LP873SDT	https://www.myvendorlink.com/external/award?s=196709&i=120
122	Excavator: Vacuum Excavator Body, Truck Mounted - 12 cubic yd.	Gapvax	VHE	1012	https://www.myvendorlink.com/external/award?s=196709&i=122
123	Excavator: Vacuum Excavator Body, Truck Mounted - 12 cubic yd.	Truvac	HXX	HXX	https://www.myvendorlink.com/external/award?s=196709&i=123
124	Excavator: Vacuum Excavator Body, Truck Mounted - 12 cubic yd.	Sewer Equipment	Ramvac	HX-12	https://www.myvendorlink.com/external/award?s=196709&i=124
125	Excavator: Vacuum Excavator Body, Truck Mounted - 12 cubic yd.	Vac-Con	MXT	VMXTPD3612/1100	https://www.myvendorlink.com/external/award?s=196709&i=125
126	Excavator: Vacuum Excavator Body, Truck Mounted - 12 cubic yd.	Vermeer	Vacuum Excavator	VXT300	https://www.myvendorlink.com/external/award?s=196709&i=126
127	Excavator: Wheeled Hydraulic Excavator - 42,000 lbs. Operating Weight	Case	WX210E	WX21OE	https://www.myvendorlink.com/external/award?s=196709&i=127
128	Excavator: Wheeled Hydraulic Excavator - 42,000 lbs. Operating Weight	Caterpillar	M318	M318	https://www.myvendorlink.com/external/award?s=196709&i=128
129	Excavator: Wheeled Hydraulic Excavator - 42,000 lbs. Operating Weight	DEVELON	DX210W-7K	DX210W-7K	https://www.myvendorlink.com/external/award?s=196709&i=129
131	Excavator: Wheeled Hydraulic Excavator - 42,000 lbs. Operating Weight	Volvo	EW180	EW180	https://www.myvendorlink.com/external/award?s=196709&i=131
132	Forklift: Cushion Tire - 4,000 lbs. Capacity	Caterpillar	GC20CN	GC20CN	https://www.myvendorlink.com/external/award?s=196709&i=132
133	Forklift: Cushion Tire - 4,000 lbs. Capacity	Clark	S20C	S20C	https://www.myvendorlink.com/external/award?s=196709&i=133
134	Forklift: Cushion Tire - 4,000 lbs. Capacity	Crown	CGC20SC-9	CGC20SC-9	https://www.myvendorlink.com/external/award?s=196709&i=134
135	Forklift: Cushion Tire - 4,000 lbs. Capacity	Hangcha	FP20C	CPYD20-XH31B1-C	https://www.myvendorlink.com/external/award?s=196709&i=135
137	Forklift: Cushion Tire - 4,000 lbs. Capacity	Hyster	S40A	S40A	https://www.myvendorlink.com/external/award?s=196709&i=137
138	Forklift: Cushion Tire - 4,000 lbs. Capacity	Hyundai	25LC-9	25LC-9	https://www.myvendorlink.com/external/award?s=196709&i=138
139	Forklift: Cushion Tire - 4,000 lbs. Capacity	LuigGong	CLG2020G-C	CLG2020G-C	https://www.myvendorlink.com/external/award?s=196709&i=139
140	Forklift: Cushion Tire - 4,000 lbs. Capacity	Mitsubishi	FGC20CN	FGC20CN	https://www.myvendorlink.com/external/award?s=196709&i=140
141	Forklift: Cushion Tire - 4,000 lbs. Capacity	Toyota	50-8FGCU20	50-8FGCU20	https://www.myvendorlink.com/external/award?s=196709&i=141
142	Forklift: Rough Terrain Forklift - 5,000 lbs. Capacity	Case	586H	586H	https://www.myvendorlink.com/external/award?s=196709&i=142
143	Forklift: Rough Terrain Forklift - 5,000 lbs. Capacity	Hangcha	RT25	CPCD25-XW98C-RT4	https://www.myvendorlink.com/external/award?s=196709&i=143
144	Forklift: Rough Terrain Forklift - 5,000 lbs. Capacity	Harlo	HP5000	HP5000	https://www.myvendorlink.com/external/award?s=196709&i=144
146	Forklift: Rough Terrain Forklift - 5,000 lbs. Capacity	JLG	AUSA	C401H	https://www.myvendorlink.com/external/award?s=196709&i=146
147	Forklift: Rough Terrain Forklift - 5,000 lbs. Capacity	Lift King	6M42	6M42	https://www.myvendorlink.com/external/award?s=196709&i=147
149	Forklift: Rough Terrain Forklift - 5,000 lbs. Capacity	Manitou	M30-4	M30-4	https://www.myvendorlink.com/external/award?s=196709&i=149
150	Forklift: Rough Terrain Forklift - 5,000 lbs. Capacity	Master Craft	MC Series	MC-5	https://www.myvendorlink.com/external/award?s=196709&i=150
151	Forklift: Telescopic Tool Carrier/Telehandler	Bobcat	TL723	TL723	https://www.myvendorlink.com/external/award?s=196709&i=151
152	Forklift: Telescopic Tool Carrier/Telehandler	Caterpillar	TH0842	TH0842	https://www.myvendorlink.com/external/award?s=196709&i=152
153	Forklift: Telescopic Tool Carrier/Telehandler	Genie	GTH-844	GTH-844	https://www.myvendorlink.com/external/award?s=196709&i=153
154	Forklift: Telescopic Tool Carrier/Telehandler	JLG	943	943	https://www.myvendorlink.com/external/award?s=196709&i=154
155	Forklift: Telescopic Tool Carrier/Telehandler	JLG	Skytrak	10042	https://www.myvendorlink.com/external/award?s=196709&i=155
156	Forklift: Telescopic Tool Carrier/Telehandler	JLG	Rotating Telehandler	R1370	https://www.myvendorlink.com/external/award?s=196709&i=156
157	Forklift: Telescopic Tool Carrier/Telehandler	Magni	Rotating Telehandler	RTH13.72	https://www.myvendorlink.com/external/award?s=196709&i=157
158	Forklift: Telescopic Tool Carrier/Telehandler	Manitou	MTA842	MTA842	https://www.myvendorlink.com/external/award?s=196709&i=158
160	Forklift: Telescopic Tool Carrier/Telehandler	Snorkel	SR9244	SR9244	https://www.myvendorlink.com/external/award?s=196709&i=160

161	Forklift: Telescopic Tool Carrier/Telehandler	Xtreme	XR843-B	XR843-B	https://www.myvendorlink.com/external/award?s=196709&i=161
163	Generator: 125kW Stationary	Blue Star Power Systems	JD125-02	JD125-02	https://www.myvendorlink.com/external/award?s=196709&i=163
164	Generator: 125kW Stationary	Caterpillar	D125	D125	https://www.myvendorlink.com/external/award?s=196709&i=164
165	Generator: 125kW Stationary	Generac	SD130	SD130	https://www.myvendorlink.com/external/award?s=196709&i=165
166	Generator: 125kW Stationary	Gillette	SPJD-1550	SPJD-1550	https://www.myvendorlink.com/external/award?s=196709&i=166
167	Generator: 125kW Stationary	HiPower	HDI-130F	HDI-130F	https://www.myvendorlink.com/external/award?s=196709&i=167
168	Generator: 125kW Stationary	Olympian	OD125	OD125	https://www.myvendorlink.com/external/award?s=196709&i=168
169	Generator: 125kW Stationary	On Demand Power Systems	125kW Standby	ODPSJD125-01	https://www.myvendorlink.com/external/award?s=196709&i=169
171	Generator: 125kW Stationary	Taylor Power Systems	TDS125	TDS125	https://www.myvendorlink.com/external/award?s=196709&i=171
172	Generator: 125kW Stationary	Tradewinds	T125	T125	https://www.myvendorlink.com/external/award?s=196709&i=172
175	Generator: 150kW Mobile	Blue Star Power Systems	VD150-02FT4MP	VD150-02FT4MP	https://www.myvendorlink.com/external/award?s=196709&i=175
176	Generator: 150kW Mobile	Bobcat	PG190WCU-3A-T4F	PG190WCU-3A-T4F	https://www.myvendorlink.com/external/award?s=196709&i=176
177	Generator: 150kW Mobile	Caterpillar	XQ230	XQ230	https://www.myvendorlink.com/external/award?s=196709&i=177
178	Generator: 150kW Mobile	Generac	MDG175DF4	MDG175DF4	https://www.myvendorlink.com/external/award?s=196709&i=178
179	Generator: 150kW Mobile	HiPower	HRJW-190 T4F	HRJW-190 T4F	https://www.myvendorlink.com/external/award?s=196709&i=179
180	Generator: 150kW Mobile	MULTIQUIP	DCA180SSJU4F3	DCA180SSJU4F3	https://www.myvendorlink.com/external/award?s=196709&i=180
181	Generator: 150kW Mobile	On Demand Power Systems	150 kW Mobile Generator	ODPSJD150M-01	https://www.myvendorlink.com/external/award?s=196709&i=181
183	Generator: 150kW Mobile	Taylor Power Systems	TM225	TM225	https://www.myvendorlink.com/external/award?s=196709&i=183
184	Generator: 150kW Mobile	Tradewinds	T150M	T150M	https://www.myvendorlink.com/external/award?s=196709&i=184
189	Generator: 500kW Mobile	Blue Star Power Systems	VD550-02FT4MP	VD550-02FT4MP	https://www.myvendorlink.com/external/award?s=196709&i=189
190	Generator: 500kW Mobile	Caterpillar	XQ570	XQ570	https://www.myvendorlink.com/external/award?s=196709&i=190
191	Generator: 500kW Mobile	Generac	570KVA	MDE570P	https://www.myvendorlink.com/external/award?s=196709&i=191
196	Generator: 500kW Mobile	Tradewinds	T500M	T500M	https://www.myvendorlink.com/external/award?s=196709&i=196
198	Generator: 500kW Stationary	Blue Star Power Systems	VD500-01	VD500-01	https://www.myvendorlink.com/external/award?s=196709&i=198
199	Generator: 500kW Stationary	Caterpillar	C15	C15	https://www.myvendorlink.com/external/award?s=196709&i=199
200	Generator: 500kW Stationary	Generac	SD500	SD500	https://www.myvendorlink.com/external/award?s=196709&i=200
201	Generator: 500kW Stationary	Gillette	SPVD-5000	SPVD-5000	https://www.myvendorlink.com/external/award?s=196709&i=201
202	Generator: 500kW Stationary	HiPower	HDI-515V	HDI-515V	https://www.myvendorlink.com/external/award?s=196709&i=202
204	Generator: 500kW Stationary	Taylor Power Systems	TD500	TD500	https://www.myvendorlink.com/external/award?s=196709&i=204
205	Generator: 500kW Stationary	Tradewinds	T500	T500	https://www.myvendorlink.com/external/award?s=196709&i=205
207	Generator: 60kW Stationary	Blue Star Power Systems	JD60-02	JD60-02	https://www.myvendorlink.com/external/award?s=196709&i=207
208	Generator: 60kW Stationary	Caterpillar	D60	D60	https://www.myvendorlink.com/external/award?s=196709&i=208
209	Generator: 60kW Stationary	Generac	SD060	SD060	https://www.myvendorlink.com/external/award?s=196709&i=209
210	Generator: 60kW Stationary	Gillette	SPD-600	SPD-600	https://www.myvendorlink.com/external/award?s=196709&i=210
211	Generator: 60kW Stationary	Gillette	SPJD-600	SPJD-600	https://www.myvendorlink.com/external/award?s=196709&i=211
212	Generator: 60kW Stationary	HiPower	HDI-60F	HDI-60F	https://www.myvendorlink.com/external/award?s=196709&i=212
213	Generator: 60kW Stationary	Olympian	OD60	OD60	https://www.myvendorlink.com/external/award?s=196709&i=213
214	Generator: 60kW Stationary	On Demand Power Systems	60kW Standby	ODPSJD60-01	https://www.myvendorlink.com/external/award?s=196709&i=214
216	Generator: 60kW Stationary	Taylor Power Systems	TDS60	TDS60	https://www.myvendorlink.com/external/award?s=196709&i=216
217	Generator: 60kW Stationary	Tradewinds	T60	T60	https://www.myvendorlink.com/external/award?s=196709&i=217
218	Horizontal Directional Drill	Vermeer	D24X40 S3	D24X40 S3	https://www.myvendorlink.com/external/award?s=196709&i=218
220	Leaf Collector: Trailer Mounted	ODB	DCL800TM	DCL800TM	https://www.myvendorlink.com/external/award?s=196709&i=220
221	Lift: Articulated Boom Lift - Self Propelled Tracked	CTE	Traccess	170/56	https://www.myvendorlink.com/external/award?s=196709&i=221
222	Lift: Scissor Lift - Self Propelled	Genie	GS-1932	GS-1932	https://www.myvendorlink.com/external/award?s=196709&i=222
223	Lift: Scissor Lift - Self Propelled	Haulotte	Optimum 1931 AC	Optimum 1931 AC	https://www.myvendorlink.com/external/award?s=196709&i=223
224	Lift: Scissor Lift - Self Propelled	JLG	JLG ES1932	JLG ES1932	https://www.myvendorlink.com/external/award?s=196709&i=224
225	Lift: Scissor Lift - Self Propelled	Snorkel	S3219 PLUS	S3219 PLUS	https://www.myvendorlink.com/external/award?s=196709&i=225
226	Light Tower: Hybrid Light Tower	Signal Power	HT444PC	HT444PC	https://www.myvendorlink.com/external/award?s=196709&i=226
228	Light Tower: Light Tower - Trailer Mounted	Bobcat	PL65WKUB-60HZ-T4F	PL65WKUB-60HZ-T4F	https://www.myvendorlink.com/external/award?s=196709&i=228
229	Light Tower: Light Tower - Trailer Mounted	Generac	MLT4060	MLT4060	https://www.myvendorlink.com/external/award?s=196709&i=229
230	Light Tower: Light Tower - Trailer Mounted	Wacker Neuson	LTT6	LTT6	https://www.myvendorlink.com/external/award?s=196709&i=230
231	Light Tower: Light Tower - Trailer Mounted	Wanco	WLT-4MK6K	WLT-4MK6K	https://www.myvendorlink.com/external/award?s=196709&i=231
232	Loader: Loader Backhoe - 4x4	Case	580SN	580SN	https://www.myvendorlink.com/external/award?s=196709&i=232
233	Loader: Loader Backhoe - 4x4	Caterpillar	416	416	https://www.myvendorlink.com/external/award?s=196709&i=233
234	Loader: Loader Backhoe - 4x4	John Deere	310P	310P	https://www.myvendorlink.com/external/award?s=196709&i=234
235	Loader: Loader Backhoe - 4x4	New Holland	Loader Backhoe	B95D	https://www.myvendorlink.com/external/award?s=196709&i=235
237	Loader: Mini Skid Steer - 1,000 lbs. Operating Capacity - Tracked Type, Stand Up Operator	Kubota	Stand On Track Loader	SCL1000	https://www.myvendorlink.com/external/award?s=196709&i=237
238	Loader: Mini Skid Steer - 1,000 lbs. Operating Capacity - Tracked Type, Stand Up Operator	Scag	Jackal	SJ1125-N-34-25KBD	https://www.myvendorlink.com/external/award?s=196709&i=238
239	Loader: Mini Skid Steer - 1,000 lbs. Operating Capacity - Tracked Type, Stand Up Operator	Vermeer	Mini Skid Steer	ML150	https://www.myvendorlink.com/external/award?s=196709&i=239
240	Loader: Skid Steer - 1,850 lbs. Operating Capacity - Wheeled Type	Bobcat	S590	S590	https://www.myvendorlink.com/external/award?s=196709&i=240
241	Loader: Skid Steer - 1,850 lbs. Operating Capacity - Wheeled Type	Case	SV185B	SV185B	https://www.myvendorlink.com/external/award?s=196709&i=241
242	Loader: Skid Steer - 1,850 lbs. Operating Capacity - Wheeled Type	Caterpillar	236D3	236D3	https://www.myvendorlink.com/external/award?s=196709&i=242
244	Loader: Skid Steer - 1,850 lbs. Operating Capacity - Wheeled Type	John Deere	318P	318P	https://www.myvendorlink.com/external/award?s=196709&i=244
245	Loader: Skid Steer - 1,850 lbs. Operating Capacity - Wheeled Type	Kubota	SSV65	SSV65	https://www.myvendorlink.com/external/award?s=196709&i=245
246	Loader: Skid Steer - 1,850 lbs. Operating Capacity - Wheeled Type	New Holland	Skid Steer Loader	L320	https://www.myvendorlink.com/external/award?s=196709&i=246
247	Loader: Skid Steer - 1,850 lbs. Operating Capacity - Wheeled Type	New Holland	Small Articulated Loader	ML12	https://www.myvendorlink.com/external/award?s=196709&i=247
248	Loader: Skid Steer - 2,800 lbs. Operating Capacity - Wheeled Type	Case	SV340B	SV340B	https://www.myvendorlink.com/external/award?s=196709&i=248

249	Loader: Skid Steer - 2,800 lbs. Operating Capacity - Wheeled Type	Caterpillar	270	270	https://www.myvendorlink.com/external/award?s=196709&i=249
250	Loader: Skid Steer - 2,800 lbs. Operating Capacity - Wheeled Type	John Deere	330P	330P	https://www.myvendorlink.com/external/award?s=196709&i=250
252	Loader: Skid Steer - 2,800 lbs. Operating Capacity - Wheeled Type	New Holland	Skid Steer Loader	L334	https://www.myvendorlink.com/external/award?s=196709&i=252
253	Loader: Skid Steer - 3,100 lbs. Operating Capacity - Tracked Type	ASV	VT-100	VT-100	https://www.myvendorlink.com/external/award?s=196709&i=253
255	Loader: Skid Steer - 3,100 lbs. Operating Capacity - Tracked Type	Bobcat	T770	T770	https://www.myvendorlink.com/external/award?s=196709&i=255
256	Loader: Skid Steer - 3,100 lbs. Operating Capacity - Tracked Type	Case	TR310B	TR310B	https://www.myvendorlink.com/external/award?s=196709&i=256
257	Loader: Skid Steer - 3,100 lbs. Operating Capacity - Tracked Type	Caterpillar	265	265	https://www.myvendorlink.com/external/award?s=196709&i=257
258	Loader: Skid Steer - 3,100 lbs. Operating Capacity - Tracked Type	DEVELON	DTL35	DTL35	https://www.myvendorlink.com/external/award?s=196709&i=258
259	Loader: Skid Steer - 3,100 lbs. Operating Capacity - Tracked Type	John Deere	331P	331P	https://www.myvendorlink.com/external/award?s=196709&i=259
260	Loader: Skid Steer - 3,100 lbs. Operating Capacity - Tracked Type	Kioti	TL750	TL750	https://www.myvendorlink.com/external/award?s=196709&i=260
261	Loader: Skid Steer - 3,100 lbs. Operating Capacity - Tracked Type	Kubota	SVL 75-3	SVL 75-3	https://www.myvendorlink.com/external/award?s=196709&i=261
263	Loader: Skid Steer - 3,100 lbs. Operating Capacity - Tracked Type	New Holland	Compact Track Loader	C332	https://www.myvendorlink.com/external/award?s=196709&i=263
265	Loader: Skid Steer - 3,100 lbs. Operating Capacity - Tracked Type	Takeuchi	TL12V2	TL12V2	https://www.myvendorlink.com/external/award?s=196709&i=265
266	Loader: Skid Steer - 3,100 lbs. Operating Capacity - Tracked Type	Yanmar	TL100VS	TL100VS	https://www.myvendorlink.com/external/award?s=196709&i=266
267	Loader: Wheel Loader - 1.5 cubic yd.	Case	321F	321F	https://www.myvendorlink.com/external/award?s=196709&i=267
268	Loader: Wheel Loader - 1.5 cubic yd.	Caterpillar	908	908	https://www.myvendorlink.com/external/award?s=196709&i=268
269	Loader: Wheel Loader - 1.5 cubic yd.	Hitachi	ZW120	ZW120	https://www.myvendorlink.com/external/award?s=196709&i=269
270	Loader: Wheel Loader - 1.5 cubic yd.	John Deere	324P	324P	https://www.myvendorlink.com/external/award?s=196709&i=270
275	Loader: Wheel Loader - 1.5 cubic yd.	Volvo	L45	L45	https://www.myvendorlink.com/external/award?s=196709&i=275
276	Loader: Wheel Loader - 1.5 cubic yd.	Yanmar	V12	V12	https://www.myvendorlink.com/external/award?s=196709&i=276
277	Loader: Wheel Loader - 3.0 cubic yd.	Case	621G	621G	https://www.myvendorlink.com/external/award?s=196709&i=277
278	Loader: Wheel Loader - 3.0 cubic yd.	Caterpillar	926	926	https://www.myvendorlink.com/external/award?s=196709&i=278
279	Loader: Wheel Loader - 3.0 cubic yd.	DEVELON	DL220-7	DL220-7	https://www.myvendorlink.com/external/award?s=196709&i=279
280	Loader: Wheel Loader - 3.0 cubic yd.	Hitachi	ZW180	ZW180	https://www.myvendorlink.com/external/award?s=196709&i=280
281	Loader: Wheel Loader - 3.0 cubic yd.	Hyundai	HL940A	HL940A	https://www.myvendorlink.com/external/award?s=196709&i=281
282	Loader: Wheel Loader - 3.0 cubic yd.	John Deere	524P	524P	https://www.myvendorlink.com/external/award?s=196709&i=282
285	Loader: Wheel Loader - 3.0 cubic yd.	Volvo	L60	L60	https://www.myvendorlink.com/external/award?s=196709&i=285
287	Loader: Wheel Loader - 5.75 cubic yd.	Caterpillar	972	972	https://www.myvendorlink.com/external/award?s=196709&i=287
288	Loader: Wheel Loader - 5.75 cubic yd.	DEVELON	DL480-7	DL480-7	https://www.myvendorlink.com/external/award?s=196709&i=288
289	Loader: Wheel Loader - 5.75 cubic yd.	Hitachi	ZW310	ZW310	https://www.myvendorlink.com/external/award?s=196709&i=289
290	Loader: Wheel Loader - 5.75 cubic yd.	Hyundai	HL975	HL975	https://www.myvendorlink.com/external/award?s=196709&i=290
291	Loader: Wheel Loader - 5.75 cubic yd.	John Deere	744P	744P	https://www.myvendorlink.com/external/award?s=196709&i=291
293	Loader: Wheel Loader - 5.75 cubic yd.	Volvo	L150	L150	https://www.myvendorlink.com/external/award?s=196709&i=293
295	Low Speed Vehicle: Electric Type	GEM	e2	e2	https://www.myvendorlink.com/external/award?s=196709&i=295
296	Low Speed Vehicle: Electric Type	GEM	E4	E4	https://www.myvendorlink.com/external/award?s=196709&i=296
297	Low Speed Vehicle: Electric Type	ICON	ICON i40X	ICON i40X	https://www.myvendorlink.com/external/award?s=196709&i=297
300	Motor Grader: Large	Caterpillar	120	120	https://www.myvendorlink.com/external/award?s=196709&i=300
301	Motor Grader: Large	John Deere	620G	620G	https://www.myvendorlink.com/external/award?s=196709&i=301
304	Motor Grader: Small	LeeBoy	685D	685D	https://www.myvendorlink.com/external/award?s=196709&i=304
306	Motor Grader: Small	Weiler	G65	G65	https://www.myvendorlink.com/external/award?s=196709&i=306
307	Mower: 15ft. Flex Wing Rotary Mower	Bush Hog	4115	4115	https://www.myvendorlink.com/external/award?s=196709&i=307
308	Mower: 15ft. Flex Wing Rotary Mower	Bush-Whacker	ST-180	ST-180	https://www.myvendorlink.com/external/award?s=196709&i=308
309	Mower: 15ft. Flex Wing Rotary Mower	John Deere	FC15M	FC15M	https://www.myvendorlink.com/external/award?s=196709&i=309
310	Mower: 15ft. Flex Wing Rotary Mower	Land Pride	RC4715	RC4715	https://www.myvendorlink.com/external/award?s=196709&i=310
311	Mower: 15ft. Flex Wing Rotary Mower	RhinoAg	4150	4150	https://www.myvendorlink.com/external/award?s=196709&i=311
312	Mower: 15ft. Flex Wing Rotary Mower	Schulte	FX-1800	FX-1800	https://www.myvendorlink.com/external/award?s=196709&i=312
313	Mower: 15ft. Flex Wing Rotary Mower	Woods	BW15.52	BW15.52	https://www.myvendorlink.com/external/award?s=196709&i=313
316	Mower: Remote Controlled Brush Mower	AGRIA	9600-112	9600-112	https://www.myvendorlink.com/external/award?s=196709&i=316
317	Mower: Remote Controlled Brush Mower	Alamo Industrial	RC28	RC28	https://www.myvendorlink.com/external/award?s=196709&i=317
319	Mower: Remote Controlled Brush Mower	RC Mowers	R-52	R-52	https://www.myvendorlink.com/external/award?s=196709&i=319
320	Mower: Remote Controlled Brush Mower	Scag	RC Extreme Slope Mower	SRC-52D-37BV-EFI	https://www.myvendorlink.com/external/award?s=196709&i=320
321	Mower: Zero Turn Radius Mower	Bad Boy	Maverick HD	BMH60FX730	https://www.myvendorlink.com/external/award?s=196709&i=321
322	Mower: Zero Turn Radius Mower	Bad Boy	Rebel SD	BRB61ZT740	https://www.myvendorlink.com/external/award?s=196709&i=322
323	Mower: Zero Turn Radius Mower	Bobcat	ZT6100	ZT6100	https://www.myvendorlink.com/external/award?s=196709&i=323
324	Mower: Zero Turn Radius Mower	Dixie Chopper	Eagle	2760KW	https://www.myvendorlink.com/external/award?s=196709&i=324
328	Mower: Zero Turn Radius Mower	Exmark	Lazer Z S-Series	LRS801GKA604A1	https://www.myvendorlink.com/external/award?s=196709&i=328
329	Mower: Zero Turn Radius Mower	Ferris	ISX2200	5902078	https://www.myvendorlink.com/external/award?s=196709&i=329
330	Mower: Zero Turn Radius Mower	Grasshopper	225	225	https://www.myvendorlink.com/external/award?s=196709&i=330
331	Mower: Zero Turn Radius Mower	Gravely	Proturn 260	992551	https://www.myvendorlink.com/external/award?s=196709&i=331
332	Mower: Zero Turn Radius Mower	Husqvarna	Z560	Z560	https://www.myvendorlink.com/external/award?s=196709&i=332
333	Mower: Zero Turn Radius Mower	Hustler	X-One	943795	https://www.myvendorlink.com/external/award?s=196709&i=333
335	Mower: Zero Turn Radius Mower	Kubota	Z725KHNC-60	Z725KHNC-60	https://www.myvendorlink.com/external/award?s=196709&i=335
337	Mower: Zero Turn Radius Mower	Scag	Tiger Cat II	STCII61V-26FTEFI	https://www.myvendorlink.com/external/award?s=196709&i=337
339	Mower: Zero Turn Radius Mower	Wright	ZXL	WZXL61S61E8E1B	https://www.myvendorlink.com/external/award?s=196709&i=339
341	Pallet Jack: Electric 4,500 lbs. Capacity	Clark	WPX45	WPX45	https://www.myvendorlink.com/external/award?s=196709&i=341
343	Pallet Jack: Electric 4,500 lbs. Capacity	Hangcha	WP22Li	CBD22-AC1-NAI	https://www.myvendorlink.com/external/award?s=196709&i=343
345	Pallet Jack: Electric 4,500 lbs. Capacity	Jungheinrich	EJE120	EJE120	https://www.myvendorlink.com/external/award?s=196709&i=345

346	Pallet Jack: Electric 4,500 lbs. Capacity	Mitsubishi	PW23	PW23	https://www.myvendorlink.com/external/award?s=196709&i=346
349	Pipe Inspection: Battery Operated Pipe Crawler Inspection System	Pipe Trekker	A-200 Pipe Crawler	A-200	https://www.myvendorlink.com/external/award?s=196709&i=349
350	Pipe Inspection: External Power Pipe Crawler Inspection System	RapidView	Mainline HD	Mainline HD	https://www.myvendorlink.com/external/award?s=196709&i=350
351	Pipe Inspection: External Power Pipe Crawler Inspection System	Aries Industries	Voyager	TR400	https://www.myvendorlink.com/external/award?s=196709&i=351
352	Portable Signal: Portable Signal - Trailer Mounted	OMJC Signal	Light Duty Portable Traffic Signal	LDPTS-S	https://www.myvendorlink.com/external/award?s=196709&i=352
353	Pump: Mobile Pump	Atlas Copco	PAS F66 KD	PAS F66 KD	https://www.myvendorlink.com/external/award?s=196709&i=353
354	Pump: Mobile Pump	BBA Pumps	BA150E	BA150E	https://www.myvendorlink.com/external/award?s=196709&i=354
356	Pump: Mobile Pump	Global Pump	6GSTAP	6GSTAP	https://www.myvendorlink.com/external/award?s=196709&i=356
357	Pump: Mobile Pump	Godwin	CD 150S	CD 150S	https://www.myvendorlink.com/external/award?s=196709&i=357
359	Pump: Mobile Pump	MWI	CT006	CT006	https://www.myvendorlink.com/external/award?s=196709&i=359
360	Pump: Mobile Pump	Opifex-Synergy	Pump Centrif-Trash 6" AP-ST-OP-D-T	Pump Centrif-Trash 6" AP-ST-OP-D-T	https://www.myvendorlink.com/external/award?s=196709&i=360
361	Pump: Mobile Pump	Pioneer	PP66S12L71	PP66S12L71	https://www.myvendorlink.com/external/award?s=196709&i=361
363	Pump: Mobile Pump	Thompson Pump	6JSC	6JSC	https://www.myvendorlink.com/external/award?s=196709&i=363
364	Pump: Mobile Pump	Tradewinds	T66P	T66P	https://www.myvendorlink.com/external/award?s=196709&i=364
365	Roadway Advisory Board: Message Board/Automatic License Plate Reader	Vetted Security Solutions	Vetted XL Message Board Trailer	VH-MSG-XL	https://www.myvendorlink.com/external/award?s=196709&i=365
366	Roadway Advisory Board: Mobile Message Board	American Signal Company	CMS-GP465T	CMS-GP465T	https://www.myvendorlink.com/external/award?s=196709&i=366
367	Roadway Advisory Board: Mobile Message Board	K&K Systems	MB9757	MB9757	https://www.myvendorlink.com/external/award?s=196709&i=367
368	Roadway Advisory Board: Mobile Message Board	Kustom Signal	Smart VMS	2	https://www.myvendorlink.com/external/award?s=196709&i=368
369	Roadway Advisory Board: Mobile Message Board	Ver-Mac	PCMS-1500	PCMS-1500	https://www.myvendorlink.com/external/award?s=196709&i=369
370	Roadway Advisory Board: Mobile Message Board	Wanco	Full Size 3-Line Message Board Trailer	WTLMB-A	https://www.myvendorlink.com/external/award?s=196709&i=370
371	Roadway Advisory Board: Mobile Message Board	Wanco	Full Size Full Matrix Message Board Trailer	WTMMB-A	https://www.myvendorlink.com/external/award?s=196709&i=371
372	Roadway Advisory Board: Mobile Speed Board	All Traffic Solutions, INC	Shield 12 - with ATS-3 Trailer - No Cloud	4001809FSA	https://www.myvendorlink.com/external/award?s=196709&i=372
373	Roadway Advisory Board: Mobile Speed Board	All Traffic Solutions, INC	SpeedAlert 18 - With ATS-3 Trailer - No Cloud	4001811FSA	https://www.myvendorlink.com/external/award?s=196709&i=373
374	Roadway Advisory Board: Mobile Speed Board	K&K Systems	LT-ER12	LT-ER12	https://www.myvendorlink.com/external/award?s=196709&i=374
375	Roadway Advisory Board: Mobile Speed Board	Kustom Signal	Smart	12	https://www.myvendorlink.com/external/award?s=196709&i=375
376	Roadway Advisory Board: Mobile Speed Board	Ver-Mac	SP-710V	SP-710V	https://www.myvendorlink.com/external/award?s=196709&i=376
377	Roadway Advisory Board: Mobile Speed Board	Wanco	Compact Radar Speed Trailer	WSDT3-S	https://www.myvendorlink.com/external/award?s=196709&i=377
378	Roadway Advisory Board: Mobile Speed Board/Automatic License Plate Reader	Vetted Security Solutions	ALPR Speed Trailer-STANDARD	VH-SPD-STD	https://www.myvendorlink.com/external/award?s=196709&i=378
379	Roadway Advisory Board: Mobile Traffic Advisory/Directional Signal Board	K&K Systems	AT154896	AT154896	https://www.myvendorlink.com/external/award?s=196709&i=379
380	Roadway Advisory Board: Mobile Traffic Advisory/Directional Signal Board	Traffix Device	Scorpion II Trailer Attenuator with Mobile Traffic Advisory / Directional Signal Board	10002-TL3M-12TA	https://www.myvendorlink.com/external/award?s=196709&i=380
381	Roadway Advisory Board: Mobile Traffic Advisory/Directional Signal Board	Ver-Mac	ST-4825	ST-4825	https://www.myvendorlink.com/external/award?s=196709&i=381
382	Roadway Advisory Board: Mobile Traffic Advisory/Directional Signal Board	Wanco	Metro Matrix Message Board Trailer	WVTMM-L	https://www.myvendorlink.com/external/award?s=196709&i=382
383	Roadway Advisory Board: Mobile Traffic Advisory/Directional Signal Board	Wanco	WECO Arrow Board Trailer	WTSP55-LSA	https://www.myvendorlink.com/external/award?s=196709&i=383
384	Roller: Compact 2,900 lbs. - Double Drum Roller - 38in. Width	BASIC Equipment	Split Drum Vibratory Roller	120V	https://www.myvendorlink.com/external/award?s=196709&i=384
385	Roller: Compact, Pneumatic Asphalt Roller	BASIC Equipment	Pneumatic Asphalt Roller	700	https://www.myvendorlink.com/external/award?s=196709&i=385
388	Roller: Compaction Roller 15,000 lbs. - Single Drum	Caterpillar	CS7	CS7	https://www.myvendorlink.com/external/award?s=196709&i=388
389	Roller: Compaction Roller 15,000 lbs. - Single Drum	Hamm	HC70i Single Drum Vibratory Roller	HC70i	https://www.myvendorlink.com/external/award?s=196709&i=389
391	Roller: Compaction Roller 15,000 lbs. - Single Drum	Sakai	SV414D	SV414D	https://www.myvendorlink.com/external/award?s=196709&i=391
393	Roller: Compaction Roller 15,000 lbs. - Single Drum	Volvo	SD75	SD75	https://www.myvendorlink.com/external/award?s=196709&i=393
396	Roller: Large 22,000 lbs. - Double Drum Roller - 70in. Width	Caterpillar	CB13	CB13	https://www.myvendorlink.com/external/award?s=196709&i=396
398	Roller: Large 22,000 lbs. - Double Drum Roller - 70in. Width	Hamm	HD+90iVV	HD+90iVV	https://www.myvendorlink.com/external/award?s=196709&i=398
399	Roller: Large 22,000 lbs. - Double Drum Roller - 70in. Width	Sakai	SW884	SW884	https://www.myvendorlink.com/external/award?s=196709&i=399
400	Roller: Large 22,000 lbs. - Double Drum Roller - 70in. Width	Volvo	DD120	DD120	https://www.myvendorlink.com/external/award?s=196709&i=400
403	Roller: Small 5,400 lbs. - Double Drum Roller - 47in. Width	Caterpillar	CB2.7	CB2.7	https://www.myvendorlink.com/external/award?s=196709&i=403
405	Roller: Small 5,400 lbs. - Double Drum Roller - 47in. Width	Hamm	HD12-VV	HD12-VV	https://www.myvendorlink.com/external/award?s=196709&i=405
406	Roller: Small 5,400 lbs. - Double Drum Roller - 47in. Width	Volvo	DD25	DD25	https://www.myvendorlink.com/external/award?s=196709&i=406
407	Security Camera: Security Camera Tower - Trailer Mounted	American Signal Company	Zone Watch - T15 Mobile CCTV Trailer	AMS40102157	https://www.myvendorlink.com/external/award?s=196709&i=407
408	Security Camera: Security Camera Tower - Trailer Mounted	OMJC Signal	Security Camera Trailer	OWL	https://www.myvendorlink.com/external/award?s=196709&i=408
409	Security Camera: Security Camera Tower - Trailer Mounted	Vetted Security Solutions	Vetted Long Run Surveillance Trailer	VH-SURV-LR-1600W	https://www.myvendorlink.com/external/award?s=196709&i=409
410	Sewer Cleaner: Combination Sewer Cleaning/Vacuum Machine Body - 10 cubic yd.	Aquatech	B-10	B-10	https://www.myvendorlink.com/external/award?s=196709&i=410
411	Sewer Cleaner: Combination Sewer Cleaning/Vacuum Machine Body - 10 cubic yd.	Gapvax	MC	1510	https://www.myvendorlink.com/external/award?s=196709&i=411
412	Sewer Cleaner: Combination Sewer Cleaning/Vacuum Machine Body - 10 cubic yd.	PipeHunter	VacHunter Combo	101035 PH8C	https://www.myvendorlink.com/external/award?s=196709&i=412
413	Sewer Cleaner: Combination Sewer Cleaning/Vacuum Machine Body - 10 cubic yd.	Sewer Equipment	900 ECO-12YD	900 ECO-12YD	https://www.myvendorlink.com/external/award?s=196709&i=413
414	Sewer Cleaner: Combination Sewer Cleaning/Vacuum Machine Body - 10 cubic yd.	Super Products	Camel Max	1200	https://www.myvendorlink.com/external/award?s=196709&i=414
415	Sewer Cleaner: Combination Sewer Cleaning/Vacuum Machine Body - 10 cubic yd.	Vacall	AJV1010	AJV1010	https://www.myvendorlink.com/external/award?s=196709&i=415
416	Sewer Cleaner: Combination Sewer Cleaning/Vacuum Machine Body - 10 cubic yd.	Vac-Con	V310N/1000	V310N/1000	https://www.myvendorlink.com/external/award?s=196709&i=416
417	Sewer Cleaner: Combination Sewer Cleaning/Vacuum Machine Body - 10 cubic yd.	Vac-Con	VPD4210SA/1000	VPD4210SA/1000	https://www.myvendorlink.com/external/award?s=196709&i=417
418	Sewer Cleaner: Combination Sewer Cleaning/Vacuum Machine Body - 10 cubic yd.	Vactor	2100l	2100l	https://www.myvendorlink.com/external/award?s=196709&i=418
419	Sewer Cleaner: Easement Machine	Prowler Equipment	Extendable Track Easement Machine	PR-ET	https://www.myvendorlink.com/external/award?s=196709&i=419
423	Sewer Cleaner: Trailer Mounted Sewer Cleaner	PipeHunter	700 Gallon Tandem Trailer Jetter	3744	https://www.myvendorlink.com/external/award?s=196709&i=423
425	Sewer Cleaner: Trailer Mounted Sewer Cleaner	Vac-Con	VecJet	VJ750	https://www.myvendorlink.com/external/award?s=196709&i=425
426	Sewer Cleaner: Trailer Mounted Sewer Cleaner	Vactor	RamJet	4018	https://www.myvendorlink.com/external/award?s=196709&i=426
432	Shop Tools & Equipment	ARI-HETRA	Brake Hub Removal Jack	WS-18-HR	https://www.myvendorlink.com/external/award?s=196709&i=432
433	Shop Tools & Equipment	ARI-HETRA	Floor Jack	WS-16124	https://www.myvendorlink.com/external/award?s=196709&i=433
434	Shop Tools & Equipment	ARI-HETRA	King Pin Press	WS-KPP143	https://www.myvendorlink.com/external/award?s=196709&i=434
435	Shop Tools & Equipment	ARI-HETRA	On Vehicle Brake Lathe	WS-BL44	https://www.myvendorlink.com/external/award?s=196709&i=435
436	Shop Tools & Equipment	ARI-HETRA	Tire Changer	WS-12645	https://www.myvendorlink.com/external/award?s=196709&i=436

437	Shop Tools & Equipment	ARI-HETRA	Tire Inflation Cage	WS-35026	https://www.myvendorlink.com/external/award?s=196709&i=437
438	Shop Tools & Equipment	ARI-HETRA	Wheel Balancer	WS-12890	https://www.myvendorlink.com/external/award?s=196709&i=438
439	Shop Tools & Equipment	ARI-HETRA	Wheel Dolly	WS-AH20440	https://www.myvendorlink.com/external/award?s=196709&i=439
440	Shop Tools & Equipment	Coats	Maxx 80	Maxx 80	https://www.myvendorlink.com/external/award?s=196709&i=440
450	Shop Tools & Equipment	Sullair	3709B	3709B	https://www.myvendorlink.com/external/award?s=196709&i=450
452	Shredder: Mobile Shredder/Grinder	Tana Shark	440D	440D	https://www.myvendorlink.com/external/award?s=196709&i=452
453	Simulator System: Equipment Operator Simulator	Caterpillar	Technology - Equipment Simulation	N/A	https://www.myvendorlink.com/external/award?s=196709&i=453
454	Solid Waste Material Handler: Wheeled Type	Caterpillar	MH3022	MH3022	https://www.myvendorlink.com/external/award?s=196709&i=454
455	Solid Waste Material Handler: Wheeled Type	Hyundai	HW250AMH	HW250AMH	https://www.myvendorlink.com/external/award?s=196709&i=455
456	Solid Waste Material Handler: Wheeled Type	Liebherr	LH26M	LH26M	https://www.myvendorlink.com/external/award?s=196709&i=456
457	Solid Waste Material Handler: Wheeled Type	Volvo	EW240	EW240	https://www.myvendorlink.com/external/award?s=196709&i=457
458	Stump Cutter	Bandit	2550	2550	https://www.myvendorlink.com/external/award?s=196709&i=458
459	Stump Cutter	Toro	STX 38	STX 38	https://www.myvendorlink.com/external/award?s=196709&i=459
460	Stump Cutter	Vermeer	SC362	SC362	https://www.myvendorlink.com/external/award?s=196709&i=460
461	Sweeper: 3-Wheel Mechanical or Regenerative Air Sweeper	Elgin	Pelican NP	Pelican NP	https://www.myvendorlink.com/external/award?s=196709&i=461
462	Sweeper: 3-Wheel Mechanical or Regenerative Air Sweeper	Global	M3	M3	https://www.myvendorlink.com/external/award?s=196709&i=462
463	Sweeper: 3-Wheel Mechanical or Regenerative Air Sweeper	Global	R3	R3	https://www.myvendorlink.com/external/award?s=196709&i=463
466	Sweeper: Mechanical Broom Street Sweeper	Bucher Municipal	E35m	E35m	https://www.myvendorlink.com/external/award?s=196709&i=466
467	Sweeper: Mechanical Broom Street Sweeper	Elgin	Eagle	Eagle	https://www.myvendorlink.com/external/award?s=196709&i=467
470	Sweeper: Mechanical Broom Street Sweeper	Schwarze Industries	M6 Avalanche	M6 Avalanche	https://www.myvendorlink.com/external/award?s=196709&i=470
471	Sweeper: Regenerative Air Street Sweeper	Bucher Municipal	R65	R65	https://www.myvendorlink.com/external/award?s=196709&i=471
472	Sweeper: Regenerative Air Street Sweeper	Elgin	Regen X	Regen X	https://www.myvendorlink.com/external/award?s=196709&i=472
473	Sweeper: Regenerative Air Street Sweeper	Schwarze Industries	A7 Tornado	A7 Tornado	https://www.myvendorlink.com/external/award?s=196709&i=473
474	Sweeper: Regenerative Air Street Sweeper	Schwarze Industries	A8 Twister	A8 Twister	https://www.myvendorlink.com/external/award?s=196709&i=474
475	Sweeper: Regenerative Air Street Sweeper	Schwarze Industries	A9 Monsoon	A9 Monsoon	https://www.myvendorlink.com/external/award?s=196709&i=475
476	Sweeper: Regenerative Air Street Sweeper	Tymco	600	600	https://www.myvendorlink.com/external/award?s=196709&i=476
477	Sweeper: Self-Propelled Hydrostatic Broom	Broce	350 Broom	350 Broom	https://www.myvendorlink.com/external/award?s=196709&i=477
478	Sweeper: Self-Propelled Hydrostatic Broom	LeeBoy	RB-50	RB-50	https://www.myvendorlink.com/external/award?s=196709&i=478
481	Sweeper: Self-Propelled Hydrostatic Broom	Weiler	B400	B400	https://www.myvendorlink.com/external/award?s=196709&i=481
483	Sweeper: Compact Air Sweeper - 2.3 cubic yd.	Ravo	R5	R5	https://www.myvendorlink.com/external/award?s=196709&i=483
484	Sweeper: Vacuum Street Sweeper	Scarab	Magnum	U72	https://www.myvendorlink.com/external/award?s=196709&i=484
485	Sweeper: Walk Behind Floor Sweeper/Scrubber	PowerBoss	Phoenix	26	https://www.myvendorlink.com/external/award?s=196709&i=485
486	Tactical Vehicle: Skid Steer Mounted (The Rook)	Caterpillar	275 with Rook Option	275 with Rook Option	https://www.myvendorlink.com/external/award?s=196709&i=486
487	Tool Carrier: Hydrostatic Drive	Alamo Industrial	Mantis	155B	https://www.myvendorlink.com/external/award?s=196709&i=487
488	Tool Carrier: Hydrostatic Drive	Diamond Mowers	DM360	DM360	https://www.myvendorlink.com/external/award?s=196709&i=488
489	Tool Carrier: Hydrostatic Drive	Energreen America	Kommunal	Kommunal	https://www.myvendorlink.com/external/award?s=196709&i=489
490	Tool Carrier: Hydrostatic Drive	MowerMax	Tool Carrier	MMB22	https://www.myvendorlink.com/external/award?s=196709&i=490
492	Tractor: Agriculture Tractor - 4x2	John Deere	5105M	5105M	https://www.myvendorlink.com/external/award?s=196709&i=492
493	Tractor: Agriculture Tractor - 4x2	Kubota	M5-111HF-1	M5-111HF-1	https://www.myvendorlink.com/external/award?s=196709&i=493
494	Tractor: Agriculture Tractor - 4x2	Massey Ferguson	MF4709	MF4709	https://www.myvendorlink.com/external/award?s=196709&i=494
495	Tractor: Agriculture Tractor - 4x2	New Holland	Powerstar	100	https://www.myvendorlink.com/external/award?s=196709&i=495
496	Tractor: Agriculture Tractor - 4x2	New Holland	PowerStar Series	PowerStar 100	https://www.myvendorlink.com/external/award?s=196709&i=496
497	Tractor: Compact Articulating Tractor - AWD	Avant	528	528	https://www.myvendorlink.com/external/award?s=196709&i=497
498	Tractor: Small Agriculture Tractor - 4x4	Bad Boy	40 Series	4035	https://www.myvendorlink.com/external/award?s=196709&i=498
501	Tractor: Small Agriculture Tractor - 4x4	John Deere	3035D	3035D	https://www.myvendorlink.com/external/award?s=196709&i=501
502	Tractor: Small Agriculture Tractor - 4x4	Kioti	CK3520	CK3520	https://www.myvendorlink.com/external/award?s=196709&i=502
503	Tractor: Small Agriculture Tractor - 4x4	Kubota	L3902 DT	L3902 DT	https://www.myvendorlink.com/external/award?s=196709&i=503
504	Tractor: Small Agriculture Tractor - 4x4	Massey Ferguson	MF1E.35	MF1E.35	https://www.myvendorlink.com/external/award?s=196709&i=504
505	Tractor: Small Agriculture Tractor - 4x4	New Holland	Boomer	35	https://www.myvendorlink.com/external/award?s=196709&i=505
506	Tractor: Small Agriculture Tractor - 4x4	New Holland	Boomer Compact	Boomer 35	https://www.myvendorlink.com/external/award?s=196709&i=506
508	Tractor: Tractor with Boom Mower - 4x4	John Deere	6M125 Alamo Industrial Mower	6M125	https://www.myvendorlink.com/external/award?s=196709&i=508
509	Tractor: Tractor with Boom Mower - 4x4	John Deere	6M125 with Tiger Bengal Boom Mower	6M125	https://www.myvendorlink.com/external/award?s=196709&i=509
510	Tractor: Tractor with Boom Mower - 4x4	Kubota	M6S-111 with Terrain King KB2300 Boom Mower	M6S-111	https://www.myvendorlink.com/external/award?s=196709&i=510
511	Tractor: Tractor with Boom Mower - 4x4	Massey Ferguson	6S.145 with Diamond Boom Mower	6S.145	https://www.myvendorlink.com/external/award?s=196709&i=511
512	Trailer: Container Chassis Trailer - 73,900 lbs. GVWR	Pitts Trailers	SC40P Chassis Trailer	SC40P	https://www.myvendorlink.com/external/award?s=196709&i=512
513	Trailer: Deck Over Equipment Trailer - 40,000 lbs. GVWR	Behnke	Super Duty Flatbed Trailer	FB8X25SDPT-40L	https://www.myvendorlink.com/external/award?s=196709&i=513
514	Trailer: Deck Over Equipment Trailer - 40,000 lbs. GVWR	Big Tex	4XPH-20+5	4XPH-20+5	https://www.myvendorlink.com/external/award?s=196709&i=514
515	Trailer: Deck Over Equipment Trailer - 40,000 lbs. GVWR	EAGER BEAVER	Eager Beaver 20-XPT Trailer	20XPT	https://www.myvendorlink.com/external/award?s=196709&i=515
516	Trailer: Deck Over Equipment Trailer - 40,000 lbs. GVWR	Econoline	24 Ton Deckover Dovetail	DP2425DA	https://www.myvendorlink.com/external/award?s=196709&i=516
518	Trailer: Deck Over Equipment Trailer - 40,000 lbs. GVWR	Interstate	40DLA	40DLA	https://www.myvendorlink.com/external/award?s=196709&i=518
519	Trailer: Deck Over Equipment Trailer - 40,000 lbs. GVWR	Pitts Trailers	TA-20	TA-20	https://www.myvendorlink.com/external/award?s=196709&i=519
521	Trailer: Deck Over Equipment Trailer - 40,000 lbs. GVWR	Texas Trailers	FB2540GVB	FB2540GVB	https://www.myvendorlink.com/external/award?s=196709&i=521
522	Trailer: Deck Over Equipment Trailer - 40,000 lbs. GVWR	Trail King	TK40LP	TK40LP	https://www.myvendorlink.com/external/award?s=196709&i=522
523	Trailer: Deck Over Flatbed Trailer - 14,000 lbs. GVWR	Big Tex	14PH-25BK+5	14PH-25BK+5	https://www.myvendorlink.com/external/award?s=196709&i=523
524	Trailer: Deck Over Flatbed Trailer - 14,000 lbs. GVWR	Bigfoot Trailers	Super Monster 17.5K Deckover Trailer	Super Monster 17.5K	https://www.myvendorlink.com/external/award?s=196709&i=524
525	Trailer: Deck Over Flatbed Trailer - 14,000 lbs. GVWR	Down 2 Earth	102" X 26' Deckover 16k GVWR	DTE826DO8B	https://www.myvendorlink.com/external/award?s=196709&i=525
526	Trailer: Deck Over Flatbed Trailer - 14,000 lbs. GVWR	Econoline	BP0725DE	BP0725DE	https://www.myvendorlink.com/external/award?s=196709&i=526

527	Trailer: Deck Over Flatbed Trailer - 14,000 lbs. GVWR	Felling	FT-14-2	FT-14-2	https://www.myvendorlink.com/external/award?s=196709&i=527
528	Trailer: Deck Over Flatbed Trailer - 14,000 lbs. GVWR	Interstate	14BST	14BST	https://www.myvendorlink.com/external/award?s=196709&i=528
529	Trailer: Deck Over Flatbed Trailer - 14,000 lbs. GVWR	Maxx-D	I-Beam Deckover Trailer	DOX-16K	https://www.myvendorlink.com/external/award?s=196709&i=529
532	Trailer: Deck Over Flatbed Trailer - 14,000 lbs. GVWR	Texas Trailers	FB3014GVB	FB3014GVB	https://www.myvendorlink.com/external/award?s=196709&i=532
533	Trailer: Deck Over Flatbed Trailer - 14,000 lbs. GVWR	Towmaster	T-16LP	T-16LP	https://www.myvendorlink.com/external/award?s=196709&i=533
534	Trailer: Deck Over Flatbed Trailer - 14,000 lbs. GVWR	Trail King	TK20LP	TK20LP	https://www.myvendorlink.com/external/award?s=196709&i=534
535	Trailer: Detachable Neck Lowboy Trailer - 100,000 lbs. GVWR	EAGER BEAVER	Eager Beaver 50-GSL-3 Lowboy	50-GSL-3	https://www.myvendorlink.com/external/award?s=196709&i=535
536	Trailer: Detachable Neck Lowboy Trailer - 100,000 lbs. GVWR	Felling	XF-100-3 HDG	XF-100-3 HDG	https://www.myvendorlink.com/external/award?s=196709&i=536
537	Trailer: Detachable Neck Lowboy Trailer - 100,000 lbs. GVWR	Pitts Trailers	50-Ton Detach with an 18 Inch Load Deck Height	LB50-18GT	https://www.myvendorlink.com/external/award?s=196709&i=537
538	Trailer: Detachable Neck Lowboy Trailer - 100,000 lbs. GVWR	Pitts Trailers	LB55-22GT	LB55-22GT	https://www.myvendorlink.com/external/award?s=196709&i=538
539	Trailer: Detachable Neck Lowboy Trailer - 100,000 lbs. GVWR	Pitts Trailers	Hydraulic Detachable Trailer	LB51-22DC	https://www.myvendorlink.com/external/award?s=196709&i=539
541	Trailer: Detachable Neck Lowboy Trailer - 100,000 lbs. GVWR	Trail King	TK102HDG	TK102HDG	https://www.myvendorlink.com/external/award?s=196709&i=541
543	Trailer: Enclosed Cargo Trailer - 7,000 lbs. GVWR	ATC	Stō 400	Stō 400	https://www.myvendorlink.com/external/award?s=196709&i=543
544	Trailer: Enclosed Cargo Trailer - 7,000 lbs. GVWR	Cargo Mate	Blazer	BL716TA2	https://www.myvendorlink.com/external/award?s=196709&i=544
545	Trailer: Enclosed Cargo Trailer - 7,000 lbs. GVWR	Express	ECT7X16TA Enclosed Cargo Trailer	ECT7X16TA	https://www.myvendorlink.com/external/award?s=196709&i=545
547	Trailer: Enclosed Cargo Trailer - 7,000 lbs. GVWR	Mission	EZEC7x16	EZEC7x16	https://www.myvendorlink.com/external/award?s=196709&i=547
549	Trailer: Enclosed Cargo Trailer - 7,000 lbs. GVWR	Texas Trailers	7` X 16` Commercial Duty Cargo Trailer	TX7X16TA2	https://www.myvendorlink.com/external/award?s=196709&i=549
550	Trailer: Enclosed Cargo Trailer - 7,000 lbs. GVWR	Wells Cargo	HD Wagon	WHD716T2	https://www.myvendorlink.com/external/award?s=196709&i=550
551	Trailer: Fixed Neck Lowboy Trailer - 70,000 lbs. GVWR	Dorsey Trailers	Fixed Neck Lowboy	LB 35-33CS	https://www.myvendorlink.com/external/award?s=196709&i=551
552	Trailer: Fixed Neck Lowboy Trailer - 70,000 lbs. GVWR	Felling	FT-70-2 MX-L	FT-70-2 MX-L	https://www.myvendorlink.com/external/award?s=196709&i=552
553	Trailer: Fixed Neck Lowboy Trailer - 70,000 lbs. GVWR	Pitts Trailers	35-Ton Fixed Neck Lowboy	LB35-33CS	https://www.myvendorlink.com/external/award?s=196709&i=553
555	Trailer: Flatbed Tilt Trailer - 40,000 lbs. GVWR	Behnke	Tag-Style Flatbed Tilt Trailer	FB8X28TPT-40L	https://www.myvendorlink.com/external/award?s=196709&i=555
556	Trailer: Hydraulic Drop Deck Trailer - 13,500 lbs. GVWR	Air-tow Trailers	Flatbed Model	T14-10	https://www.myvendorlink.com/external/award?s=196709&i=556
557	Trailer: Hydraulic Drop Deck Trailer - 13,500 lbs. GVWR	Triple L Trailers	Hydraulic Drop Deck Flatbed Trailer	1016	https://www.myvendorlink.com/external/award?s=196709&i=557
561	Trailer: Hydraulic Tail Trailer - 70,000 lbs. GVWR	Towmaster	T-70HT	T-70HT	https://www.myvendorlink.com/external/award?s=196709&i=561
562	Trailer: Hydraulic Tail Trailer - 70,000 lbs. GVWR	Trail King	TK80HT	TK80HT	https://www.myvendorlink.com/external/award?s=196709&i=562
563	Trailer: Hydraulic Tail Trailer - 70,000 lbs. GVWR	XL Specialized Trailers	XL 80PT	XL 80PT	https://www.myvendorlink.com/external/award?s=196709&i=563
564	Trailer: Leachate Tanker - 6,500 gallons	MAC Trailer	Stainless Steel Leachate Tank	SRX-6500-1-2-NC	https://www.myvendorlink.com/external/award?s=196709&i=564
565	Trailer: Livestock Trailer - 7,000 lbs. GVWR	Delta Trailers	500ES-16	500ES-16	https://www.myvendorlink.com/external/award?s=196709&i=565
566	Trailer: Livestock Trailer - 7,000 lbs. GVWR	Frontier Trailers	LIV167LITE	LIV167LITE	https://www.myvendorlink.com/external/award?s=196709&i=566
568	Trailer: Mobile Fuel Trailer - 460 gallons	Boss Trailers	590 Gallon Fuel Trailer	FT590052	https://www.myvendorlink.com/external/award?s=196709&i=568
569	Trailer: Mobile Fuel Trailer - 460 gallons	Thunder Creek	EV500 Fuel Trailer	EV500	https://www.myvendorlink.com/external/award?s=196709&i=569
570	Trailer: Multi Tank Fuel/Service 880 gallons Non-Hazmat - 14,000 lbs. GVWR	Thunder Creek	MTT920 Fuel Trailer	MTT920	https://www.myvendorlink.com/external/award?s=196709&i=570
571	Trailer: Pothole Patch Unit - 12,000 lbs. GVWR	Falcon	4-Ton Transporter	4T1B-D	https://www.myvendorlink.com/external/award?s=196709&i=571
572	Trailer: Pothole Patch Unit - 12,000 lbs. GVWR	Stepp Manufacturing	SPHD	SPHD 2.0	https://www.myvendorlink.com/external/award?s=196709&i=572
573	Trailer: Pressure/Vacuum Trailer - 6,000 gallons	MAC Trailer	Stainless Steel Vac Trailer	SRX-6000-1-NC	https://www.myvendorlink.com/external/award?s=196709&i=573
574	Trailer: Pull Behind Dump Trailer - 14,000 lbs. GVWR	American Made Products, Inc.	Dump Trailer	AMP14DP-7T	https://www.myvendorlink.com/external/award?s=196709&i=574
575	Trailer: Pull Behind Dump Trailer - 14,000 lbs. GVWR	Big Tex	14LP-14	14LP-14	https://www.myvendorlink.com/external/award?s=196709&i=575
576	Trailer: Pull Behind Dump Trailer - 14,000 lbs. GVWR	Down 2 Earth	7` X 14` Dump 14k GVWR	DTE714DT7B	https://www.myvendorlink.com/external/award?s=196709&i=576
578	Trailer: Pull Behind Dump Trailer - 14,000 lbs. GVWR	Felling	FT-14 DT HD	FT-14 DT HD	https://www.myvendorlink.com/external/award?s=196709&i=578
579	Trailer: Pull Behind Dump Trailer - 14,000 lbs. GVWR	Maxx-D	I-Beam Dump Trailer	DKX-14K 83"	https://www.myvendorlink.com/external/award?s=196709&i=579
580	Trailer: Pull Behind Dump Trailer - 14,000 lbs. GVWR	Pitts Trailers	7-Ton High Wall Equipment Trailer	TDH7	https://www.myvendorlink.com/external/award?s=196709&i=580
582	Trailer: Pull Behind Dump Trailer - 14,000 lbs. GVWR	Towmaster	T-12HD	T-12HD	https://www.myvendorlink.com/external/award?s=196709&i=582
583	Trailer: Pull Behind Dump Trailer - 14,000 lbs. GVWR	U-Dump	Pro Series	831414LP	https://www.myvendorlink.com/external/award?s=196709&i=583
585	Trailer: Refrigeration/Freezer Trailer - 7,000 lbs. GVWR	American Made Products, Inc.	Cooler Trailer	AMP12CT-3T	https://www.myvendorlink.com/external/award?s=196709&i=585
586	Trailer: Refrigeration/Freezer Trailer - 7,000 lbs. GVWR	Polar King Mobile Trailers	PKM612	PKM612	https://www.myvendorlink.com/external/award?s=196709&i=586
587	Trailer: Restroom Trailer ADA Compliant	Comforts of Home Services, Inc.	3 Station Restroom Trailer	4303NBCA	https://www.myvendorlink.com/external/award?s=196709&i=587
588	Trailer: Restroom Trailer ADA Compliant	UltraLav Trailers	ADA+2 Restroom Trailer	WC20-ADA2	https://www.myvendorlink.com/external/award?s=196709&i=588
589	Trailer: Sludge Trailer - 80,000 lbs. GVWR	East Manufacturing	Genesis	Frame Dump Trailer	https://www.myvendorlink.com/external/award?s=196709&i=589
590	Trailer: Sludge Trailer - 80,000 lbs. GVWR	MAC Trailer	Sludge Trailer	FTEDSP30	https://www.myvendorlink.com/external/award?s=196709&i=590
591	Trailer: Utility/Equipment Trailer - 7,000 lbs. GVWR	Big Tex	70PI-16	70PI-16	https://www.myvendorlink.com/external/award?s=196709&i=591
592	Trailer: Utility/Equipment Trailer - 7,000 lbs. GVWR	Blue Collar Trailers	Utility Trailer	7x16TA2	https://www.myvendorlink.com/external/award?s=196709&i=592
593	Trailer: Utility/Equipment Trailer - 7,000 lbs. GVWR	Down 2 Earth	76" X 16` Landscape/Utility Tandem	DTE7616UT3.5B	https://www.myvendorlink.com/external/award?s=196709&i=593
596	Trailer: Utility/Equipment Trailer - 7,000 lbs. GVWR	Maxx-D	Tandem Axle Utility Trailer	U3X-7K	https://www.myvendorlink.com/external/award?s=196709&i=596
597	Trailer: Utility/Equipment Trailer - 7,000 lbs. GVWR	Mission	MLS6.5X16 2.0	MLS6.5X16 2.0	https://www.myvendorlink.com/external/award?s=196709&i=597
599	Trailer: Utility/Equipment Trailer - 7,000 lbs. GVWR	Texas Trailers	UT61670GV	UT61670GV	https://www.myvendorlink.com/external/award?s=196709&i=599
600	Trailer: Utility/Equipment Trailer - 7,000 lbs. GVWR	Trail King	TK12U	TK12U	https://www.myvendorlink.com/external/award?s=196709&i=600
602	Trailer: Waste Trailer with Walking Floor	MAC Trailer	TNSP48MF	TNSP48MF	https://www.myvendorlink.com/external/award?s=196709&i=602
603	Trailer: Waste Trailer with Walking Floor	Ravens by Kruz Inc.	Ravens Live Floor Aluminum S&P Trailer	RALF-48	https://www.myvendorlink.com/external/award?s=196709&i=603
604	Trailer: Waste Trailer with Walking Floor	Steco	AW048102	AW048102	https://www.myvendorlink.com/external/award?s=196709&i=604
605	Trailer: Waste Trailer with Walking Floor	Travis Trailer	TT/WF Classic	TT/WF Classic 48x102	https://www.myvendorlink.com/external/award?s=196709&i=605
606	Trailer: Waste Trailer with Walking Floor	Warren Equipment Inc.	WMFT-AS	WMFT-AS-48102	https://www.myvendorlink.com/external/award?s=196709&i=606
607	Transfer Switch: 600 Amp Automatic Transfer Switch	ABB	ATS 600A 480V N3R Delayed Transition	TAB600-FS	https://www.myvendorlink.com/external/award?s=196709&i=607
608	Transfer Switch: 600 Amp Automatic Transfer Switch	ASCO	Series 300	Series 300	https://www.myvendorlink.com/external/award?s=196709&i=608
609	Transfer Switch: 600 Amp Automatic Transfer Switch	Caterpillar	CG	CG	https://www.myvendorlink.com/external/award?s=196709&i=609
610	Transfer Switch: 600 Amp Automatic Transfer Switch	EATON	ATS 600A 480V N3R Delayed Transition	TCH600-FS	https://www.myvendorlink.com/external/award?s=196709&i=610
611	Transfer Switch: 600 Amp Automatic Transfer Switch	Generac	TX/PSTS-600	TX/PSTS-600	https://www.myvendorlink.com/external/award?s=196709&i=611

612	Transfer Switch: 600 Amp Automatic Transfer Switch	Thomson	Auto Transfer Switch	TS 870	https://www.myvendorlink.com/external/award?s=196709&i=612
613	Trencher: Tractor Type	Vermeer	Ride-On Trencher	RTX750	https://www.myvendorlink.com/external/award?s=196709&i=613
614	Trencher: Walk Behind Trencher	Vermeer	RTX250	RTX250	https://www.myvendorlink.com/external/award?s=196709&i=614
616	Underground Locating Equipment: Ground Penetrating Radar	US Radar	Quantaum Imager	Q4300	https://www.myvendorlink.com/external/award?s=196709&i=616
617	Underground Locating Equipment: Utility Locator	Vermeer	Verifier G-3	G-3	https://www.myvendorlink.com/external/award?s=196709&i=617
619	Vehicle Lift: Above Ground - 2 Post Asymmetric Stationary Vehicle Lift 10k	Challenger	SA10	SA10	https://www.myvendorlink.com/external/award?s=196709&i=619
621	Vehicle Lift: Above Ground - 2 Post Symmetric Stationary Vehicle Lift 12k	Challenger	CL12A-LC	CL12A-LC	https://www.myvendorlink.com/external/award?s=196709&i=621
622	Vehicle Lift: Above Ground - 2 Post Symmetric Stationary Vehicle Lift 15k	Challenger	CL16-3S	CL16-3S	https://www.myvendorlink.com/external/award?s=196709&i=622
625	Vehicle Lift: Above Ground - 2 Post Symmetric Stationary Vehicle Lift 18k	Challenger	CL20	CL20	https://www.myvendorlink.com/external/award?s=196709&i=625
628	Vehicle Lift: Above Ground - 2 Post Versymmetric Stationary Vehicle Lift 10k	Challenger	CL10V3	CL10V3	https://www.myvendorlink.com/external/award?s=196709&i=628
629	Vehicle Lift: Above Ground - 4 Column, Alignment Lift with Front/Rear Jacks and Integrated Turntables and Slip Plates 14k	Challenger	AR4115XAO	AR4115XAO	https://www.myvendorlink.com/external/award?s=196709&i=629
631	Vehicle Lift: Above Ground - 4 Post Alignment Lift with Turnplates and Rolling Jack 30k	Challenger	4030 Series	4030EFX	https://www.myvendorlink.com/external/award?s=196709&i=631
633	Vehicle Lift: Above Ground Drive On Platform Lift, Pantograph Type	ARI-HETRA	HDPL Drive-On Platform Lift	HDPL-77-30	https://www.myvendorlink.com/external/award?s=196709&i=633
634	Vehicle Lift: In Ground Drive On Platform Lift, Scissor Type	ARI-HETRA	HDXL Drive-On Scissor Lift	HDXL-912	https://www.myvendorlink.com/external/award?s=196709&i=634
635	Vehicle Lift: Mobile - 2 Column, Cabled	ARI-HETRA	LP-10-2-AJ	LP-10-2-AJ	https://www.myvendorlink.com/external/award?s=196709&i=635
636	Vehicle Lift: Mobile - 2 Column, Cabled	Stertil-Koni	ST-1085-1FSA	ST-1085-1FSA	https://www.myvendorlink.com/external/award?s=196709&i=636
637	Vehicle Lift: Mobile - 2 Column, Wireless	ARI-HETRA	BPW-10-2-AJ	BPW-10-2-AJ	https://www.myvendorlink.com/external/award?s=196709&i=637
638	Vehicle Lift: Mobile - 2 Column, Wireless	Challenger	CLHM-190-2	CLHM-190-2	https://www.myvendorlink.com/external/award?s=196709&i=638
639	Vehicle Lift: Mobile - 2 Column, Wireless	Stertil-Koni	ST-1085-1FWA	ST-1085-1FWA	https://www.myvendorlink.com/external/award?s=196709&i=639
640	Vehicle Lift: Mobile - 4 Column, Cabled	ARI-HETRA	LP-10-4-AJ	LP-10-4-AJ	https://www.myvendorlink.com/external/award?s=196709&i=640
641	Vehicle Lift: Mobile - 4 Column, Cabled	Stertil-Koni	ST-1085-2FSA	ST-1085-2FSA	https://www.myvendorlink.com/external/award?s=196709&i=641
642	Vehicle Lift: Mobile - 4 Column, Wireless	ARI-HETRA	BPW-10-4-AJ	BPW-10-4-AJ	https://www.myvendorlink.com/external/award?s=196709&i=642
643	Vehicle Lift: Mobile - 4 Column, Wireless	Challenger	CLHM-190-4	CLHM-190-4	https://www.myvendorlink.com/external/award?s=196709&i=643
644	Vehicle Lift: Mobile - 4 Column, Wireless	Stertil-Koni	ST-1085-2FWA	ST-1085-2FWA	https://www.myvendorlink.com/external/award?s=196709&i=644
645	Vehicle Lift: Mobile - 6 Column, Cabled	ARI-HETRA	LP-10-6-AJ	LP-10-6-AJ	https://www.myvendorlink.com/external/award?s=196709&i=645
646	Vehicle Lift: Mobile - 6 Column, Cabled	Stertil-Koni	ST-1085-3FSA	ST-1085-3FSA	https://www.myvendorlink.com/external/award?s=196709&i=646
647	Vehicle Lift: Mobile - 6 Column, Wireless	ARI-HETRA	BPW-10-6-AJ	BPW-10-6-AJ	https://www.myvendorlink.com/external/award?s=196709&i=647
648	Vehicle Lift: Mobile - 6 Column, Wireless	Challenger	CLHM-190-6	CLHM-190-6	https://www.myvendorlink.com/external/award?s=196709&i=648
649	Vehicle Lift: Mobile - 6 Column, Wireless	Stertil-Koni	ST-1085-3FWA	ST-1085-3FWA	https://www.myvendorlink.com/external/award?s=196709&i=649
650	Vehicle Lift: Mobile - 8 Column, Wireless	ARI-HETRA	BPW-10-8-AJ	BPW-10-8-AJ	https://www.myvendorlink.com/external/award?s=196709&i=650
651	Vehicle Lift: Mobile - 8 Column, Wireless	Challenger	CLHM-190-8	CLHM-190-8	https://www.myvendorlink.com/external/award?s=196709&i=651
652	Bulldozer: 90hp	Hyundai	HD100LGP	HD100LGP	https://www.myvendorlink.com/external/award?s=196709&i=652
653	Dump Truck: Articulating Off Road Dump Truck - 50,000 lbs. Payload	Hyundai	HA30	HA30	https://www.myvendorlink.com/external/award?s=196709&i=653
654	Excavator: Wheeled Hydraulic Excavator - 42,000 lbs. Operating Weight	Hyundai	HW210A	HW210A	https://www.myvendorlink.com/external/award?s=196709&i=654
655	Lift: Articulated Boom Lift - Self Propelled Tracked	JLG	X500AJ	X500AJ	https://www.myvendorlink.com/external/award?s=196709&i=655
656	Loader: Mini Skid Steer - 1,000 lbs. Operating Capacity - Tracked Type, Stand Up Operator	Wacker Neuson	Utility Track Loader	SM100	https://www.myvendorlink.com/external/award?s=196709&i=656
657	Pipe Inspection: External Power Pipe Crawler Inspection System	Envirosight	Rovver X	Rovver X	https://www.myvendorlink.com/external/award?s=196709&i=657
658	Pipe Inspection: External Power Pipe Crawler Inspection System	Minicam	ACR HD	ACR HD	https://www.myvendorlink.com/external/award?s=196709&i=658
659	Portable Signal: Portable Signal - Trailer Mounted	Ver-Mac	TLD-3612-G3	TLD-3612-G3	https://www.myvendorlink.com/external/award?s=196709&i=659
660	Roller: Compact 2,900 lbs. - Double Drum Roller - 38in. Width	Caterpillar	CB1.8	CB1.8	https://www.myvendorlink.com/external/award?s=196709&i=660
661	Roller: Compact, Pneumatic Asphalt Roller	Weiler	CT3A	CT3A	https://www.myvendorlink.com/external/award?s=196709&i=661
662	Security Camera: Security Camera Tower - Trailer Mounted	Ver-Mac	CT-2430	CT-2430	https://www.myvendorlink.com/external/award?s=196709&i=662
663	Sewer Cleaner: Easement Machine	Vactor	Ace	Ace	https://www.myvendorlink.com/external/award?s=196709&i=663
664	Sweeper: Vacuum Street Sweeper	Elgin	Whirlwind	Whirlwind	https://www.myvendorlink.com/external/award?s=196709&i=664
665	Sweeper: Walk Behind Floor Sweeper/Scrubber	Advance by Nilfisk	SC750 26D	56112395	https://www.myvendorlink.com/external/award?s=196709&i=665
666	Sweeper: Walk Behind Floor Sweeper/Scrubber	Kärcher	BD 70/75 W BB Classic	BD 70/75 W BB Classic	https://www.myvendorlink.com/external/award?s=196709&i=666
667	Trailer: Deck Over Equipment Trailer - 40,000 lbs. GVWR	Towmaster	T-40LP	T-40LP	https://www.myvendorlink.com/external/award?s=196709&i=667
668	Trailer: Deck Over Flatbed Trailer - 14,000 lbs. GVWR	Kaufman	17,000 GVWR Deluxe Flatbed Trailer – 22ft	FP-8K-22D	https://www.myvendorlink.com/external/award?s=196709&i=668
669	Trailer: Detachable Neck Lowboy Trailer - 100,000 lbs. GVWR	Kaufman	50 Ton Detachable Gooseneck Air Ride Trailer – Standard	FRDT50-24-24-A-54-00-N	https://www.myvendorlink.com/external/award?s=196709&i=669
670	Trailer: Detachable Neck Lowboy Trailer - 100,000 lbs. GVWR	Towmaster	T-100DTG	T-100DTG	https://www.myvendorlink.com/external/award?s=196709&i=670
671	Trailer: Enclosed Cargo Trailer - 7,000 lbs. GVWR	Kaufman	7,000 GVWR – 7' Wide Tandem Axle Cargo Trailer – Deluxe	FEN-2/3.5K-7X16D	https://www.myvendorlink.com/external/award?s=196709&i=671
672	Trailer: Fixed Neck Lowboy Trailer - 70,000 lbs. GVWR	Towmaster	T-70RG	T-70RG	https://www.myvendorlink.com/external/award?s=196709&i=672
673	Trailer: Flatbed Tilt Trailer - 40,000 lbs. GVWR	Econoline	Dual Tandem 20-Ton Tilt	DP2029TA	https://www.myvendorlink.com/external/award?s=196709&i=673
674	Trailer: Flatbed Tilt Trailer - 40,000 lbs. GVWR	Interstate	40TDL	40TDL	https://www.myvendorlink.com/external/award?s=196709&i=674
675	Trailer: Flatbed Tilt Trailer - 40,000 lbs. GVWR	Towmaster	T-40 T	T-40 T	https://www.myvendorlink.com/external/award?s=196709&i=675
676	Trailer: Hydraulic Drop Deck Trailer - 13,500 lbs. GVWR	Felling	FT-12 EZ-T	FT-12 EZ-T	https://www.myvendorlink.com/external/award?s=196709&i=676
677	Trailer: Multi Tank Fuel/Service 880 gallons Non-Hazmat - 14,000 lbs. GVWR	Boss Trailers	Non-Hazmat 880 Gallon Multi Tank Fuel Trailer	MT880072	https://www.myvendorlink.com/external/award?s=196709&i=677
678	Trailer: Pull Behind Dump Trailer - 14,000 lbs. GVWR	Kaufman	14,000 GVWR Standard Medium Duty Dump Trailer – 14ft x 80in	FXHLP-7K-14S	https://www.myvendorlink.com/external/award?s=196709&i=678
679	Trailer: Sludge Trailer - 80,000 lbs. GVWR	Ravens by Kruz Inc.	Aluminum S&P Dump Trailer	RFA-30-SF	https://www.myvendorlink.com/external/award?s=196709&i=679
680	Trailer: Sludge Trailer - 80,000 lbs. GVWR	Warren Equipment Inc.	WRDT-AS	WRDT-AS	https://www.myvendorlink.com/external/award?s=196709&i=680
681	Trailer: Sludge Trailer - 80,000 lbs. GVWR	Travis Trailer	Sludge 30ft. Classic S-96	Sludge 30ft. Classic S-96	https://www.myvendorlink.com/external/award?s=196709&i=681
682	Trailer: Utility/Equipment Trailer - 7,000 lbs. GVWR	Kaufman	Standard Landscape Utility Trailer 7,000 GVWR – 16ft	FB-3.5K-16S	https://www.myvendorlink.com/external/award?s=196709&i=682

FSA Cooperative Purchasing Program



FSA26-EQU24.0: Equipment
Final Award Report

Bid Award

Contract: FSA26-EQU24.0, Equipment

Group: All Terrain & Utility Vehicles: All Terrain Vehicles (Quad)

Item: 1, CanAm, Outlander, 500

Description: Refer FSA Base Specifications PDF document.

Model Upgrade/Downgrade:

Zone	Rank	Vendor	Price	Build File	Options File
Western	Primary	McKibben Powersports Inc.	$7,670.00	Build	Options
	Alternate	Ameri-Recreational Sports, LLC	$7,700.00	Build	Options
Northern	Primary	Ameri-Recreational Sports, LLC	$7,300.00	Build	Options
	Alternate	McKibben Powersports Inc.	$7,470.00	Build	Options
Central	Primary	Ameri-Recreational Sports, LLC	$7,100.00	Build	Options
	Alternate	McKibben Powersports Inc.	$7,217.00	Build	Options
Southern	Primary	Ameri-Recreational Sports, LLC	$7,100.00	Build	Options
	Alternate	McKibben Powersports Inc.	$7,217.00	Build	Options

Bid Award

Contract: FSA26-EQU24.0, Equipment

Group: All Terrain & Utility Vehicles: All Terrain Vehicles (Quad)

Item: 2, CFMOTO, CFORCE 500, CFORCE 500

Description: Refer FSA Base Specifications PDF document.

Model Upgrade/Downgrade:

Zone	Rank	Vendor	Price	Build File	Options File
Western	Primary	Ameri-Recreational Sports, LLC	$6,300.00	Build	Options
	Alternate	Love Power Equipment, Inc	$7,700.00	Build	Options
Northern	Primary	Ameri-Recreational Sports, LLC	$5,900.00	Build	Options
	Alternate	Love Power Equipment, Inc	$7,599.00	Build	Options
Central	Primary	Ameri-Recreational Sports, LLC	$5,700.00	Build	Options
	Alternate	Love Power Equipment, Inc	$7,599.00	Build	Options
Southern	Primary	Ameri-Recreational Sports, LLC	$5,700.00	Build	Options
	Alternate	Love Power Equipment, Inc	$7,700.00	Build	Options

Bid Award

Contract: FSA26-EQU24.0, Equipment

Group: All Terrain & Utility Vehicles: All Terrain Vehicles (Quad)

Item: 3, Honda, Rancher 420, TRX420FA6

Description: Refer FSA Base Specifications PDF document.

Model Upgrade/Downgrade:

Zone	Rank	Vendor	Price	Build File	Options File
Western	Primary	McKibben Powersports Inc.	$8,444.00	Build	Options
	Alternate	Ameri-Recreational Sports, LLC	$9,100.00	Build	Options
Northern	Primary	McKibben Powersports Inc.	$8,270.00	Build	Options
	Alternate	Ameri-Recreational Sports, LLC	$8,700.00	Build	Options
Central	Primary	McKibben Powersports Inc.	$7,943.00	Build	Options
	Alternate	Ameri-Recreational Sports, LLC	$8,500.00	Build	Options
Southern	Primary	McKibben Powersports Inc.	$7,943.00	Build	Options
	Alternate	Ameri-Recreational Sports, LLC	$8,500.00	Build	Options

Bid Award

Contract: FSA26-EQU24.0, Equipment

Group: All Terrain & Utility Vehicles: All Terrain Vehicles (Quad)

Item: 4, Honda, Rubicon 520, TRX520FA6

Description: Refer FSA Base Specifications PDF document.

Model Upgrade/Downgrade:

Zone	Rank	Vendor	Price	Build File	Options File
Western	Primary Alternate	McKibben Powersports Inc. Ameri-Recreational Sports, LLC	$9,573.00 $10,400.00	Build Build	Options Options
Northern	Primary Alternate	McKibben Powersports Inc. Ameri-Recreational Sports, LLC	$9,273.00 $10,000.00	Build Build	Options Options
Central	Primary Alternate	McKibben Powersports Inc. Ameri-Recreational Sports, LLC	$8,972.00 $9,800.00	Build Build	Options Options
Southern	Primary Alternate	McKibben Powersports Inc. Ameri-Recreational Sports, LLC	$8,972.00 $9,800.00	Build Build	Options Options

Bid Award

Contract: FSA26-EQU24.0, Equipment

Group: All Terrain & Utility Vehicles: All Terrain Vehicles (Quad)

Item: 5, Polaris, Sportsman 500, A27SBA50B1

Description: Refer FSA Base Specifications PDF document.

Model Upgrade/Downgrade:

Zone	Rank	Vendor	Price	Build File	Options File
Western	Primary	McKibben Powersports Inc.	$7,211.00	Build	Options
	Alternate	Love Power Equipment, Inc	$7,299.00	Build	Options
	Alternate	Ameri-Recreational Sports, LLC	$7,500.00	Build	Options
Northern	Primary	McKibben Powersports Inc.	$6,911.00	Build	Options
	Alternate	Ameri-Recreational Sports, LLC	$7,100.00	Build	Options
	Alternate	Love Power Equipment, Inc	$7,100.00	Build	Options
Central	Primary	McKibben Powersports Inc.	$6,610.00	Build	Options
	Alternate	Love Power Equipment, Inc	$6,800.00	Build	Options
	Alternate	Ameri-Recreational Sports, LLC	$6,900.00	Build	Options
Southern	Primary	McKibben Powersports Inc.	$6,610.00	Build	Options
	Alternate	Ameri-Recreational Sports, LLC	$6,900.00	Build	Options
	Alternate	Love Power Equipment, Inc	$7,299.00	Build	Options

Bid Award

Contract: FSA26-EQU24.0, Equipment

Group: All Terrain & Utility Vehicles: All Terrain Vehicles (Quad)

Item: 6, Polaris, Sportsman 600, A27SEA57A1

Description: Refer FSA Base Specifications PDF document.

Model Upgrade/Downgrade:

Zone	Rank	Vendor	Price	Build File	Options File
Western	Primary	Love Power Equipment, Inc	$8,000.00	Build	Options
	Alternate	McKibben Powersports Inc.	$8,045.00	Build	Options
	Alternate	Ameri-Recreational Sports, LLC	$8,400.00	Build	Options
Northern	Primary	McKibben Powersports Inc.	$7,745.00	Build	Options
	Alternate	Love Power Equipment, Inc	$7,800.00	Build	Options
	Alternate	Ameri-Recreational Sports, LLC	$8,000.00	Build	Options
Central	Primary	McKibben Powersports Inc.	$7,444.00	Build	Options
	Alternate	Ameri-Recreational Sports, LLC	$7,800.00	Build	Options
	Alternate	Love Power Equipment, Inc	$7,800.00	Build	Options
Southern	Primary	McKibben Powersports Inc.	$7,444.00	Build	Options
	Alternate	Ameri-Recreational Sports, LLC	$7,800.00	Build	Options
	Alternate	Love Power Equipment, Inc	$8,000.00	Build	Options

Bid Award

Contract: FSA26-EQU24.0, Equipment

Group: All Terrain & Utility Vehicles: All Terrain Vehicles (Quad)

Item: 7, Suzuki, King Quad 400 ASI, LTA400FM7

Description: Refer FSA Base Specifications PDF document.

Model Upgrade/Downgrade:

Zone	Rank	Vendor	Price	Build File	Options File
Western	Primary	McKibben Powersports Inc.	$7,158.00	Build	Options
	Alternate	Love Power Equipment, Inc	$7,300.00	Build	Options
	Alternate	DELAND MOTORSPORTS	$7,610.00	Build	
Northern	Primary	McKibben Powersports Inc.	$6,758.00	Build	Options
	Alternate	Love Power Equipment, Inc	$7,100.00	Build	Options
	Alternate	DELAND MOTORSPORTS	$7,610.00	Build	
Central	Primary	McKibben Powersports Inc.	$6,458.00	Build	Options
	Alternate	Love Power Equipment, Inc	$7,100.00	Build	Options
	Alternate	DELAND MOTORSPORTS	$7,310.00	Build	
Southern	Primary	McKibben Powersports Inc.	$6,458.00	Build	Options
	Alternate	Love Power Equipment, Inc	$7,300.00	Build	Options
	Alternate	DELAND MOTORSPORTS	$7,310.00	Build	

Bid Award

Contract: FSA26-EQU24.0, Equipment

Group: All Terrain & Utility Vehicles: All Terrain Vehicles (Quad)

Item: 8, Yamaha, Kodiac 450, YFM45KDXVG

Description: Refer FSA Base Specifications PDF document.

Model Upgrade/Downgrade:

Zone	Rank	Vendor	Price	Build File	Options File
Western	Primary	Ameri-Recreational Sports, LLC	$7,200.00	Build	Options
	Alternate	McKibben Powersports Inc.	$7,283.00	Build	Options
Northern	Primary	Ameri-Recreational Sports, LLC	$6,800.00	Build	Options
	Alternate	McKibben Powersports Inc.	$6,883.00	Build	Options
Central	Primary	McKibben Powersports Inc.	$6,582.00	Build	Options
	Alternate	Ameri-Recreational Sports, LLC	$6,600.00	Build	Options
Southern	Primary	McKibben Powersports Inc.	$6,582.00	Build	Options
	Alternate	Ameri-Recreational Sports, LLC	$6,600.00	Build	Options

Bid Award

Contract: FSA26-EQU24.0, Equipment

Group: All Terrain & Utility Vehicles: Electric Utility Vehicles (Side-by-Side)

Item: 9, Columbia, Utilitruck, Utilitruck

Description: Refer FSA Base Specifications PDF document.

Model Upgrade/Downgrade:

Zone	Rank	Vendor	Price	Build File	Options File
Western	Primary	Southern States ToyotaLift	$22,030.00	Build	Options
Northern	Primary	Southern States ToyotaLift	$22,030.00	Build	Options
Central	Primary	Southern States ToyotaLift	$22,030.00	Build	Options
Southern	Primary	Southern States ToyotaLift	$22,030.00	Build	Options

Bid Award

Contract: FSA26-EQU24.0, Equipment

Group: All Terrain & Utility Vehicles: Electric Utility Vehicles (Side-by-Side)

Item: 13, Landmaster, Amp, CA00143

Description: Refer FSA Base Specifications PDF document.

Model Upgrade/Downgrade:

Zone	Rank	Vendor	Price	Build File	Options File
Western	Primary	Love Power Equipment, Inc	$17,099.00	Build	Options
	Alternate	Segway of Central Florida	$18,494.00	Build	Options
Northern	Primary	Segway of Central Florida	$16,919.00	Build	Options
	Alternate	Love Power Equipment, Inc	$17,099.00	Build	Options
Central	Primary	Love Power Equipment, Inc	$16,599.00	Build	Options
	Alternate	Segway of Central Florida	$16,894.00	Build	Options
Southern	Primary	Love Power Equipment, Inc	$17,099.00	Build	Options
	Alternate	Segway of Central Florida	$18,444.00	Build	Options

Bid Award

Contract: FSA26-EQU24.0, Equipment

Group: All Terrain & Utility Vehicles: Utility Vehicles (Side-by-Side)

Item: 14, Bobcat, UV34, UV34

Description: Refer FSA Base Specifications PDF document.

Model Upgrade/Downgrade:

Zone	Rank	Vendor	Price	Build File	Options File
Western	Primary	Doosan Bobcat North America, Inc.	$17,346.00	Build	Options
Northern	Primary	Doosan Bobcat North America, Inc.	$17,346.00	Build	Options
Central	Primary	Doosan Bobcat North America, Inc.	$17,346.00	Build	Options
Southern	Primary	Doosan Bobcat North America, Inc.	$17,346.00	Build	Options

Bid Award

Contract: FSA26-EQU24.0, Equipment

Group: All Terrain & Utility Vehicles: Utility Vehicles (Side-by-Side)

Item: 15, Bobcat, UW56, UW56

Description: Refer FSA Base Specifications PDF document.

Model Upgrade/Downgrade:

Zone	Rank	Vendor	Price	Build File	Options File
Western	Primary	Doosan Bobcat North America, Inc.	$67,558.00	Build	Options
Northern	Primary	Doosan Bobcat North America, Inc.	$67,558.00	Build	Options
Central	Primary	Doosan Bobcat North America, Inc.	$67,558.00	Build	Options
Southern	Primary	Doosan Bobcat North America, Inc.	$67,558.00	Build	Options

Bid Award

Contract: FSA26-EQU24.0, Equipment

Group: All Terrain & Utility Vehicles: Utility Vehicles (Side-by-Side)

Item: 16, CanAm, Defender, HD7

Description: Refer FSA Base Specifications PDF document.

Model Upgrade/Downgrade:

Zone	Rank	Vendor	Price	Build File	Options File
Western	Primary	McKibben Powersports Inc.	$12,626.00	Build	Options
	Alternate	Ameri-Recreational Sports, LLC	$13,200.00	Build	Options
Northern	Primary	McKibben Powersports Inc.	$12,426.00	Build	Options
	Alternate	Ameri-Recreational Sports, LLC	$12,800.00	Build	Options
Central	Primary	McKibben Powersports Inc.	$12,126.00	Build	Options
	Alternate	Ameri-Recreational Sports, LLC	$12,600.00	Build	Options
Southern	Primary	McKibben Powersports Inc.	$12,126.00	Build	Options
	Alternate	Ameri-Recreational Sports, LLC	$12,600.00	Build	Options

Bid Award

Contract: FSA26-EQU24.0, Equipment

Group: All Terrain & Utility Vehicles: Utility Vehicles (Side-by-Side)

Item: 17, CFMOTO, UFORCE 600, UFORCE 600

Description: Refer FSA Base Specifications PDF document.

Model Upgrade/Downgrade:

Zone	Rank	Vendor	Price	Build File	Options File
Western	Primary Alternate	Ameri-Recreational Sports, LLC Love Power Equipment, Inc	$10,100.00 $12,100.00	Build Build	Options Options
Northern	Primary Alternate	Ameri-Recreational Sports, LLC Love Power Equipment, Inc	$9,700.00 $11,900.00	Build Build	Options Options
Central	Primary Alternate	Ameri-Recreational Sports, LLC Love Power Equipment, Inc	$9,500.00 $11,900.00	Build Build	Options Options
Southern	Primary Alternate	Ameri-Recreational Sports, LLC Love Power Equipment, Inc	$9,500.00 $12,100.00	Build Build	Options Options

Bid Award

Contract: FSA26-EQU24.0, Equipment

Group: All Terrain & Utility Vehicles: Utility Vehicles (Side-by-Side)

Item: 18, Honda, Pioneer 520, SXS520M2

Description: Refer FSA Base Specifications PDF document.

Model Upgrade/Downgrade:

Zone	Rank	Vendor	Price	Build File	Options File
Western	Primary	McKibben Powersports Inc.	$10,292.00	Build	Options
	Alternate	Love Power Equipment, Inc	$10,850.00	Build	Options
	Alternate	Ameri-Recreational Sports, LLC	$11,200.00	Build	Options
Northern	Primary	McKibben Powersports Inc.	$9,992.00	Build	Options
	Alternate	Love Power Equipment, Inc	$10,650.00	Build	Options
	Alternate	Ameri-Recreational Sports, LLC	$10,800.00	Build	Options
Central	Primary	McKibben Powersports Inc.	$9,553.00	Build	Options
	Alternate	Ameri-Recreational Sports, LLC	$10,600.00	Build	Options
	Alternate	Love Power Equipment, Inc	$10,650.00	Build	Options
Southern	Primary	McKibben Powersports Inc.	$9,553.00	Build	Options
	Alternate	Ameri-Recreational Sports, LLC	$10,600.00	Build	Options
	Alternate	Love Power Equipment, Inc	$10,850.00	Build	Options

Bid Award

Contract: FSA26-EQU24.0, Equipment

Group: All Terrain & Utility Vehicles: Utility Vehicles (Side-by-Side)

Item: 19, Honda, Pioneer 700, SXS700M2M

Description: Refer FSA Base Specifications PDF document.

Model Upgrade/Downgrade:

Zone	Rank	Vendor	Price	Build File	Options File
Western	Primary	McKibben Powersports Inc.	$11,941.00	Build	Options
	Alternate	Ameri-Recreational Sports, LLC	$13,000.00	Build	Options
	Alternate	Love Power Equipment, Inc	$13,400.00	Build	Options
Northern	Primary	McKibben Powersports Inc.	$11,641.00	Build	Options
	Alternate	Ameri-Recreational Sports, LLC	$12,600.00	Build	Options
	Alternate	Love Power Equipment, Inc	$13,100.00	Build	Options
Central	Primary	McKibben Powersports Inc.	$11,241.00	Build	Options
	Alternate	Ameri-Recreational Sports, LLC	$12,400.00	Build	Options
	Alternate	Love Power Equipment, Inc	$13,100.00	Build	Options
Southern	Primary	McKibben Powersports Inc.	$11,241.00	Build	Options
	Alternate	Ameri-Recreational Sports, LLC	$12,400.00	Build	Options
	Alternate	Love Power Equipment, Inc	$13,400.00	Build	Options

Bid Award

Contract: FSA26-EQU24.0, Equipment

Group: All Terrain & Utility Vehicles: Utility Vehicles (Side-by-Side)

Item: 20, John Deere, Gator, HPX615E

Description: Refer FSA Base Specifications PDF document.

Model Upgrade/Downgrade:

Zone	Rank	Vendor	Price	Build File	Options File
Western	Primary	Everglades Equipment Group	$14,950.00	Build	Options
Northern	Primary	Everglades Equipment Group	$14,950.00	Build	Options
Central	Primary	Everglades Equipment Group	$14,950.00	Build	Options
Southern	Primary	Everglades Equipment Group	$14,950.00	Build	Options

Bid Award

Contract: FSA26-EQU24.0, Equipment

Group: All Terrain & Utility Vehicles: Utility Vehicles (Side-by-Side)

Item: 21, Kawasaki, Mule 4x4, 4010

Description: Refer FSA Base Specifications PDF document.

Model Upgrade/Downgrade:

Zone	Rank	Vendor	Price	Build File	Options File
Western	Primary	McKibben Powersports Inc.	$11,137.00	Build	Options
	Alternate	Ameri-Recreational Sports, LLC	$11,800.00	Build	Options
Northern	Primary	McKibben Powersports Inc.	$10,937.00	Build	Options
	Alternate	Ameri-Recreational Sports, LLC	$11,400.00	Build	Options
Central	Primary	McKibben Powersports Inc.	$10,637.00	Build	Options
	Alternate	Ameri-Recreational Sports, LLC	$11,200.00	Build	Options
Southern	Primary	McKibben Powersports Inc.	$10,637.00	Build	Options
	Alternate	Ameri-Recreational Sports, LLC	$11,200.00	Build	Options

Bid Award

Contract: FSA26-EQU24.0, Equipment

Group: All Terrain & Utility Vehicles: Utility Vehicles (Side-by-Side)

Item: 22, Kubota, RTVX2, RTVX2-BKH-1

Description: Refer FSA Base Specifications PDF document.

Model Upgrade/Downgrade:

Zone	Rank	Vendor	Price	Build File	Options File
Western	Primary	Creel Tractor Company	$16,029.00	Build	Options
Northern	Primary Alternate	Creel Tractor Company Florida Coast Equipment, Inc.	$15,929.00 $15,970.00	Build Build	Options Options
Central	Primary Alternate	Creel Tractor Company Florida Coast Equipment, Inc.	$15,629.00 $15,970.00	Build Build	Options Options
Southern	Primary Alternate	Creel Tractor Company Florida Coast Equipment, Inc.	$15,379.00 $15,970.00	Build Build	Options Options

Bid Award

Contract: FSA26-EQU24.0, Equipment

Group: All Terrain & Utility Vehicles: Utility Vehicles (Side-by-Side)

Item: 23, Landmaster, N7, CA00135

Description: Refer FSA Base Specifications PDF document.

Model Upgrade/Downgrade:

Zone	Rank	Vendor	Price	Build File	Options File
Western	Primary Alternate	Love Power Equipment, Inc Segway of Central Florida	$11,499.00 $13,174.00	Build Build	Options Options
Northern	Primary Alternate	Love Power Equipment, Inc Segway of Central Florida	$11,499.00 $11,599.00	Build Build	Options Options
Central	Primary Alternate	Love Power Equipment, Inc Segway of Central Florida	$11,499.00 $11,574.00	Build Build	Options Options
Southern	Primary Alternate	Love Power Equipment, Inc Segway of Central Florida	$11,499.00 $13,124.00	Build Build	Options Options

Bid Award

Contract: FSA26-EQU24.0, Equipment

Group: All Terrain & Utility Vehicles: Utility Vehicles (Side-by-Side)

Item: 25, Polaris, Pro XD Mid-Size, D27M2A57B4

Description: Refer FSA Base Specifications PDF document.

Model Upgrade/Downgrade:

Zone	Rank	Vendor	Price	Build File	Options File
Western	Primary	Love Power Equipment, Inc	$14,100.00	Build	Options
	Alternate	McKibben Powersports Inc.	$14,101.00	Build	Options
Northern	Primary	Love Power Equipment, Inc	$13,999.00	Build	Options
	Alternate	McKibben Powersports Inc.	$14,072.00	Build	Options
Central	Primary	McKibben Powersports Inc.	$13,843.00	Build	Options
	Alternate	Love Power Equipment, Inc	$13,999.00	Build	Options
Southern	Primary	McKibben Powersports Inc.	$13,843.00	Build	Options
	Alternate	Love Power Equipment, Inc	$14,100.00	Build	Options

Bid Award

Contract: FSA26-EQU24.0, Equipment

Group: All Terrain & Utility Vehicles: Utility Vehicles (Side-by-Side)

Item: 26, Polaris, Ranger 600, R27MAA57B8

Description: Refer FSA Base Specifications PDF document.

Model Upgrade/Downgrade:

Zone	Rank	Vendor	Price	Build File	Options File
Western	Primary	McKibben Powersports Inc.	$10,932.00	Build	Options
	Alternate	Love Power Equipment, Inc	$11,800.00	Build	Options
	Alternate	Ameri-Recreational Sports, LLC	$12,100.00	Build	Options
Northern	Primary	McKibben Powersports Inc.	$10,732.00	Build	Options
	Alternate	Love Power Equipment, Inc	$11,500.00	Build	Options
	Alternate	Ameri-Recreational Sports, LLC	$11,700.00	Build	Options
Central	Primary	McKibben Powersports Inc.	$10,432.00	Build	Options
	Alternate	Ameri-Recreational Sports, LLC	$11,500.00	Build	Options
	Alternate	Love Power Equipment, Inc	$11,500.00	Build	Options
Southern	Primary	McKibben Powersports Inc.	$10,432.00	Build	Options
	Alternate	Ameri-Recreational Sports, LLC	$11,500.00	Build	Options
	Alternate	Love Power Equipment, Inc	$11,800.00	Build	Options

Bid Award

Contract: FSA26-EQU24.0, Equipment

Group: Blower: Ride On Blower

Item: 28, Scag, Windstorm, WS23-37BV-EFI

Description: Refer FSA Base Specifications PDF document.

Model Upgrade/Downgrade:

Zone	Rank	Vendor	Price	Build File	Options File
Western	Primary	Green Thumb Palm Beach	$12,792.00	Build	Options
Northern	Primary	Green Thumb Palm Beach	$11,617.00	Build	Options
Central	Primary	Green Thumb Palm Beach	$11,517.00	Build	Options
Southern	Primary	Green Thumb Palm Beach	$11,192.00	Build	Options

Bid Award

Contract: FSA26-EQU24.0, Equipment

Group: Bulldozer: 180hp

Item: 32, Case, 2050M, 2050M

Description: Refer FSA Base Specifications PDF document.

Model Upgrade/Downgrade:

Zone	Rank	Vendor	Price	Build File	Options File
Western	Primary	Innovative Equipment Services 2 LLC CASE Power & Equipment of Florida	$512,201.00	Build	Options
Northern	Primary	Innovative Equipment Services 2 LLC CASE Power & Equipment of Florida	$512,201.00	Build	Options
Central	Primary	Innovative Equipment Services 2 LLC CASE Power & Equipment of Florida	$512,201.00	Build	Options
Southern	Primary	Innovative Equipment Services 2 LLC CASE Power & Equipment of Florida	$512,201.00	Build	Options

Bid Award

Contract: FSA26-EQU24.0, Equipment

Group: Bulldozer: 180hp

Item: 33, Caterpillar, D6, D6

Description: Refer FSA Base Specifications PDF document.

Model Upgrade/Downgrade:

Zone	Rank	Vendor	Price	Build File	Options File
Western	Primary	Ring Power Corporation	$516,012.00	Build	Options
Northern	Primary	Ring Power Corporation	$516,012.00	Build	Options
Central	Primary	Ring Power Corporation	$516,012.00	Build	Options
Southern	Primary	Kelly Tractor Co	$480,770.00	Build	Options

Bid Award

Contract: FSA26-EQU24.0, Equipment

Group: Bulldozer: 180hp

Item: 34, John Deere, 850P, 850P

Description: Refer FSA Base Specifications PDF document.

Model Upgrade/Downgrade:

Zone	Rank	Vendor	Price	Build File	Options File
Western	Primary	Dobbs Equipment, LLC	$446,875.00	Build	Options
Northern	Primary	Dobbs Equipment, LLC	$446,875.00	Build	Options
Central	Primary	Dobbs Equipment, LLC	$437,215.00	Build	Options
Southern	Primary	Dobbs Equipment, LLC	$437,215.00	Build	Options

Bid Award

Contract: FSA26-EQU24.0, Equipment

Group: Bulldozer: 180hp

Item: 35, Liebherr, PR736, PR736

Description: Refer FSA Base Specifications PDF document.

Model Upgrade/Downgrade:

Zone	Rank	Vendor	Price	Build File	Options File
Western	Primary	GREAT SOUTHERN EQUIPMENT, LLC	$501,311.00	Build	Options
Northern	Primary	GREAT SOUTHERN EQUIPMENT, LLC	$501,311.00	Build	Options
Central	Primary	GREAT SOUTHERN EQUIPMENT, LLC	$501,311.00	Build	Options
Southern	Primary	GREAT SOUTHERN EQUIPMENT, LLC	$501,311.00	Build	Options

Bid Award

Contract: FSA26-EQU24.0, Equipment

Group: Bulldozer: 70hp

Item: 36, Case, 650M, 650M

Description: Refer FSA Base Specifications PDF document.

Model Upgrade/Downgrade:

Zone	Rank	Vendor	Price	Build File	Options File
Western	Primary	Innovative Equipment Services 2 LLC CASE Power & Equipment of Florida	$146,464.00	Build	Options
Northern	Primary	Innovative Equipment Services 2 LLC CASE Power & Equipment of Florida	$146,464.00	Build	Options
Central	Primary	Innovative Equipment Services 2 LLC CASE Power & Equipment of Florida	$146,464.00	Build	Options
Southern	Primary	Innovative Equipment Services 2 LLC CASE Power & Equipment of Florida	$146,464.00	Build	Options

Bid Award

Contract: FSA26-EQU24.0, Equipment

Group: Bulldozer: 70hp

Item: 37, Caterpillar, D1, D1

Description: Refer FSA Base Specifications PDF document.

Model Upgrade/Downgrade:

Zone	Rank	Vendor	Price	Build File	Options File
Western	Primary	Ring Power Corporation	$148,710.00	Build	Options
Northern	Primary	Ring Power Corporation	$148,710.00	Build	Options
Central	Primary	Ring Power Corporation	$148,710.00	Build	Options
Southern	Primary	Kelly Tractor Co	$140,300.00	Build	Options

Bid Award

Contract: FSA26-EQU24.0, Equipment

Group: Bulldozer: 70hp

Item: 38, John Deere, 450P, 450P

Description: Refer FSA Base Specifications PDF document.

Model Upgrade/Downgrade:

Zone	Rank	Vendor	Price	Build File	Options File
Western	Primary	Dobbs Equipment, LLC	$151,895.00	Build	Options
Northern	Primary	Dobbs Equipment, LLC	$151,895.00	Build	Options
Central	Primary	Dobbs Equipment, LLC	$148,475.00	Build	Options
Southern	Primary	Dobbs Equipment, LLC	$148,475.00	Build	Options

Bid Award

Contract: FSA26-EQU24.0, Equipment

Group: Bulldozer: 90hp

Item: 39, Case, 850M, 850M

Description: Refer FSA Base Specifications PDF document.

Model Upgrade/Downgrade:

Zone	Rank	Vendor	Price	Build File	Options File
Western	Primary	Innovative Equipment Services 2 LLC CASE Power & Equipment of Florida	$209,081.00	Build	Options
Northern	Primary	Innovative Equipment Services 2 LLC CASE Power & Equipment of Florida	$209,081.00	Build	Options
Central	Primary	Innovative Equipment Services 2 LLC CASE Power & Equipment of Florida	$209,081.00	Build	Options
Southern	Primary	Innovative Equipment Services 2 LLC CASE Power & Equipment of Florida	$209,081.00	Build	Options

Bid Award

Contract: FSA26-EQU24.0, Equipment

Group: Bulldozer: 90hp

Item: 40, Caterpillar, D2, D2

Description: Refer FSA Base Specifications PDF document.

Model Upgrade/Downgrade:

Zone	Rank	Vendor	Price	Build File	Options File
Western	Primary	Ring Power Corporation	$172,629.00	Build	Options
Northern	Primary	Ring Power Corporation	$172,629.00	Build	Options
Central	Primary	Ring Power Corporation	$172,629.00	Build	Options
Southern	Primary	Kelly Tractor Co	$164,465.00	Build	Options

Bid Award

Contract: FSA26-EQU24.0, Equipment

Group: Bulldozer: 90hp

Item: 41, DEVELON, DD100, DD100

Description: Refer FSA Base Specifications PDF document.

Model Upgrade/Downgrade:

Zone	Rank	Vendor	Price	Build File	Options File
Western	Primary	HD CONSTRUCTION EQUIPMENT DEVELON NORTH AMERICA LLC	$142,009.00	Build	Options
Northern	Primary	HD CONSTRUCTION EQUIPMENT DEVELON NORTH AMERICA LLC	$142,009.00	Build	Options
Central	Primary	HD CONSTRUCTION EQUIPMENT DEVELON NORTH AMERICA LLC	$142,009.00	Build	Options
Southern	Primary	HD CONSTRUCTION EQUIPMENT DEVELON NORTH AMERICA LLC	$142,009.00	Build	Options

Bid Award

Contract: FSA26-EQU24.0, Equipment

Group: Bulldozer: 90hp

Item: 42, John Deere, 550P, 550P

Description: Refer FSA Base Specifications PDF document.

Model Upgrade/Downgrade:

Zone	Rank	Vendor	Price	Build File	Options File
Western	Primary	Dobbs Equipment, LLC	$185,215.00	Build	Options
Northern	Primary	Dobbs Equipment, LLC	$185,215.00	Build	Options
Central	Primary	Dobbs Equipment, LLC	$180,375.00	Build	Options
Southern	Primary	Dobbs Equipment, LLC	$180,375.00	Build	Options

Bid Award

Contract: FSA26-EQU24.0, Equipment

Group: Bulldozer: 90hp

Item: 652, Hyundai, HD100LGP, HD100LGP

Description: Refer FSA Base Specifications PDF document.

Model Upgrade/Downgrade:

Zone	Rank	Vendor	Price	Build File	Options File
Western	Primary	National Equipment Dealers, LLC	$183,603.00	Build	Options
Northern	Primary	National Equipment Dealers, LLC	$183,603.00	Build	Options
Central	Primary	National Equipment Dealers, LLC	$183,603.00	Build	Options
Southern	Primary	National Equipment Dealers, LLC	$183,603.00	Build	Options

Bid Award

Contract: FSA26-EQU24.0, Equipment

Group: Chipper: Brush Chipper

Item: 43, Bandit, Intimidator, 15XP

Description: Refer FSA Base Specifications PDF document.

Model Upgrade/Downgrade:

Zone	Rank	Vendor	Price	Build File	Options File
Western					
Northern					
Central					
Southern	Primary	Alta Construction Equipment Florida, LLC	$80,000.00	Build	Options

Bid Award

Contract: FSA26-EQU24.0, Equipment

Group: Chipper: Brush Chipper

Item: 44, Vermeer, BC1500, BC1500

Description: Refer FSA Base Specifications PDF document.

Model Upgrade/Downgrade:

Zone	Rank	Vendor	Price	Build File	Options File
Western	Primary	Vermeer Southeast Sales	$95,584.00	Build	Options
Northern	Primary	Vermeer Southeast Sales	$95,584.00	Build	Options
Central	Primary	Vermeer Southeast Sales	$95,584.00	Build	Options
Southern	Primary	Vermeer Southeast Sales	$95,584.00	Build	Options

Bid Award

Contract: FSA26-EQU24.0, Equipment

Group: Compactor: 80,000 lbs. Landfill Compactor

Item: 46, Caterpillar, 826, 826

Description: Refer FSA Base Specifications PDF document.

Model Upgrade/Downgrade:

Zone	Rank	Vendor	Price	Build File	Options File
Western	Primary	Ring Power Corporation	$1,049,058.00	Build	Options
Northern	Primary	Ring Power Corporation	$1,049,058.00	Build	Options
Central	Primary	Ring Power Corporation	$1,049,058.00	Build	Options
Southern	Primary	Kelly Tractor Co	$1,016,140.00	Build	Options

Bid Award

Contract: FSA26-EQU24.0, Equipment

Group: Compactor: 80,000 lbs. Landfill Compactor

Item: 47, Tana, H380, H380

Description: Refer FSA Base Specifications PDF document.

Model Upgrade/Downgrade:

Zone	Rank	Vendor	Price	Build File	Options File
Western	Primary	Humdinger Equipment, Ltd.	$1,096,940.00	Build	Options
Northern	Primary	Humdinger Equipment, Ltd.	$1,096,940.00	Build	Options
Central	Primary	Humdinger Equipment, Ltd.	$1,096,940.00	Build	Options
Southern	Primary	Humdinger Equipment, Ltd.	$1,096,940.00	Build	Options

Bid Award

Contract: FSA26-EQU24.0, Equipment

Group: Compactor: 80,000 lbs. Landfill Compactor

Item: 48, Volvo, LC450, LC450

Description: Refer FSA Base Specifications PDF document.

Model Upgrade/Downgrade:

Zone	Rank	Vendor	Price	Build File	Options File
Western	Primary	Cowin Equipment Company	$1,013,374.00	Build	Options
Northern	Primary	Alta Construction Equipment Florida, LLC	$1,015,000.00	Build	Options
Central	Primary	Alta Construction Equipment Florida, LLC	$1,015,000.00	Build	Options
Southern	Primary	Alta Construction Equipment Florida, LLC	$1,015,000.00	Build	Options

Bid Award

Contract: FSA26-EQU24.0, Equipment

Group: Compressor: Air Compressor - Trailer Mounted

Item: 49, Atlas Copco, XAS 188 T4F, XAS 188 T4F

Description: Refer FSA Base Specifications PDF document.

Model Upgrade/Downgrade:

Zone	Rank	Vendor	Price	Build File	Options File
Western	Primary	Ring Power Corporation	$33,649.00	Build	Options
Northern	Primary	Ring Power Corporation	$33,649.00	Build	Options
Central	Primary	Ring Power Corporation	$33,649.00	Build	Options
Southern	Primary Alternate	Ring Power Corporation Kelly Tractor Co	$33,649.00 $34,075.00	Build Build	Options Options

Bid Award

Contract: FSA26-EQU24.0, Equipment

Group: Compressor: Air Compressor - Trailer Mounted

Item: 50, Bobcat, PA185VWDO-T4F, PA185VWDO-T4F

Description: Refer FSA Base Specifications PDF document.

Model Upgrade/Downgrade:

Zone	Rank	Vendor	Price	Build File	Options File
Western	Primary	Doosan Bobcat North America, Inc.	$26,982.00	Build	Options
Northern	Primary	Doosan Bobcat North America, Inc.	$26,982.00	Build	Options
Central	Primary	Doosan Bobcat North America, Inc.	$26,982.00	Build	Options
Southern	Primary	Doosan Bobcat North America, Inc.	$26,982.00	Build	Options

Bid Award

Contract: FSA26-EQU24.0, Equipment

Group: Compressor: Air Compressor - Trailer Mounted

Item: 53, Sullair, 185 T4F, 185 T4F

Description: Refer FSA Base Specifications PDF document.

Model Upgrade/Downgrade:

Zone	Rank	Vendor	Price	Build File	Options File
Western	Primary	Ring Power Corporation	$34,463.00	Build	Options
Northern	Primary	Ring Power Corporation	$34,463.00	Build	Options
Central	Primary	Ring Power Corporation	$34,463.00	Build	Options
Southern	Primary Alternate	Ring Power Corporation Kelly Tractor Co	$34,463.00 $35,600.00	Build Build	Options Options

Bid Award

Contract: FSA26-EQU24.0, Equipment

Group: Compressor: Air Compressor - Trailer Mounted

Item: 54, Sullivan Palatek, D185P, D185P

Description: Refer FSA Base Specifications PDF document.

Model Upgrade/Downgrade:

Zone	Rank	Vendor	Price	Build File	Options File
Western					
Northern					
Central	Primary	Kelly Tractor Co	$30,625.00	Build	Options
Southern	Primary	Kelly Tractor Co	$30,625.00	Build	Options

Bid Award

Contract: FSA26-EQU24.0, Equipment

Group: Dump Truck: Articulating Off Road Dump Truck - 50,000 lbs. Payload

Item: 55, Bell, B25E, B25E

Description: Refer FSA Base Specifications PDF document.

Model Upgrade/Downgrade:

Zone	Rank	Vendor	Price	Build File	Options File
Western	Primary	National Equipment Dealers, LLC	$500,526.00	Build	Options
Northern	Primary	National Equipment Dealers, LLC	$500,526.00	Build	Options
Central	Primary	National Equipment Dealers, LLC	$500,526.00	Build	Options
Southern	Primary	National Equipment Dealers, LLC	$500,526.00	Build	Options

Bid Award

Contract: FSA26-EQU24.0, Equipment

Group: Dump Truck: Articulating Off Road Dump Truck - 50,000 lbs. Payload

Item: 56, Caterpillar, 725, 725

Description: Refer FSA Base Specifications PDF document.

Model Upgrade/Downgrade:

Zone	Rank	Vendor	Price	Build File	Options File
Western	Primary	Ring Power Corporation	$522,716.00	Build	Options
Northern	Primary	Ring Power Corporation	$522,716.00	Build	Options
Central	Primary	Ring Power Corporation	$522,716.00	Build	Options
Southern	Primary	Kelly Tractor Co	$500,360.00	Build	Options

Bid Award

Contract: FSA26-EQU24.0, Equipment

Group: Dump Truck: Articulating Off Road Dump Truck - 50,000 lbs. Payload

Item: 57, DEVELON, DA30-5, DA30-5

Description: Refer FSA Base Specifications PDF document.

Model Upgrade/Downgrade:

Zone	Rank	Vendor	Price	Build File	Options File
Western	Primary	HD CONSTRUCTION EQUIPMENT DEVELON NORTH AMERICA LLC	$416,004.00	Build	Options
Northern	Primary	HD CONSTRUCTION EQUIPMENT DEVELON NORTH AMERICA LLC	$416,004.00	Build	Options
Central	Primary	HD CONSTRUCTION EQUIPMENT DEVELON NORTH AMERICA LLC	$416,004.00	Build	Options
Southern	Primary	HD CONSTRUCTION EQUIPMENT DEVELON NORTH AMERICA LLC	$416,004.00	Build	Options

Bid Award

Contract: FSA26-EQU24.0, Equipment

Group: Dump Truck: Articulating Off Road Dump Truck - 50,000 lbs. Payload

Item: 58, John Deere, 260P, 260P

Description: Refer FSA Base Specifications PDF document.

Model Upgrade/Downgrade:

Zone	Rank	Vendor	Price	Build File	Options File
Western	Primary	Dobbs Equipment, LLC	$492,175.00	Build	Options
Northern	Primary	Dobbs Equipment, LLC	$492,175.00	Build	Options
Central	Primary	Dobbs Equipment, LLC	$481,285.00	Build	Options
Southern	Primary	Dobbs Equipment, LLC	$481,285.00	Build	Options

Bid Award

Contract: FSA26-EQU24.0, Equipment

Group: Dump Truck: Articulating Off Road Dump Truck - 50,000 lbs. Payload

Item: 59, Liebherr, TA230, TA230

Description: Refer FSA Base Specifications PDF document.

Model Upgrade/Downgrade:

Zone	Rank	Vendor	Price	Build File	Options File
Western	Primary	GREAT SOUTHERN EQUIPMENT, LLC	$534,046.00	Build	Options
Northern	Primary	GREAT SOUTHERN EQUIPMENT, LLC	$534,046.00	Build	Options
Central	Primary	GREAT SOUTHERN EQUIPMENT, LLC	$534,046.00	Build	Options
Southern	Primary	GREAT SOUTHERN EQUIPMENT, LLC	$534,046.00	Build	Options

Bid Award

Contract: FSA26-EQU24.0, Equipment

Group: Dump Truck: Articulating Off Road Dump Truck - 50,000 lbs. Payload

Item: 61, Volvo, A25, A25

Description: Refer FSA Base Specifications PDF document.

Model Upgrade/Downgrade:

Zone	Rank	Vendor	Price	Build File	Options File
Western	Primary	Cowin Equipment Company	$462,079.00	Build	Options
Northern	Primary	Alta Construction Equipment Florida, LLC	$462,000.00	Build	Options
Central	Primary	Alta Construction Equipment Florida, LLC	$462,000.00	Build	Options
Southern	Primary	Alta Construction Equipment Florida, LLC	$462,000.00	Build	Options

Bid Award

Contract: FSA26-EQU24.0, Equipment

Group: Dump Truck: Articulating Off Road Dump Truck - 50,000 lbs. Payload

Item: 653, Hyundai, HA30, HA30

Description: Refer FSA Base Specifications PDF document.

Model Upgrade/Downgrade:

Zone	Rank	Vendor	Price	Build File	Options File
Western	Primary	National Equipment Dealers, LLC	$502,363.00	Build	Options
Northern	Primary	National Equipment Dealers, LLC	$502,363.00	Build	Options
Central	Primary	National Equipment Dealers, LLC	$502,363.00	Build	Options
Southern	Primary	National Equipment Dealers, LLC	$502,363.00	Build	Options

Bid Award

Contract: FSA26-EQU24.0, Equipment

Group: Excavator: All Terrain Walking Excavator

Item: 62, Euromach, R1055, R1055

Description: Refer FSA Base Specifications PDF document.

Model Upgrade/Downgrade:

Zone	Rank	Vendor	Price	Build File	Options File
Western	Primary	KJF Equipment Services LLC	$520,000.00	Build	Options
Northern	Primary	KJF Equipment Services LLC	$520,000.00	Build	Options
Central	Primary	KJF Equipment Services LLC	$520,000.00	Build	Options
Southern	Primary	KJF Equipment Services LLC	$520,000.00	Build	Options

Bid Award

Contract: FSA26-EQU24.0, Equipment

Group: Excavator: All Terrain Walking Excavator

Item: 63, Kaiser, S8, S8

Description: Refer FSA Base Specifications PDF document.

Model Upgrade/Downgrade:

Zone	Rank	Vendor	Price	Build File	Options File
Western	Primary	GREAT SOUTHERN EQUIPMENT, LLC	$587,000.00	Build	Options
Northern	Primary	GREAT SOUTHERN EQUIPMENT, LLC	$587,000.00	Build	Options
Central	Primary	GREAT SOUTHERN EQUIPMENT, LLC	$587,000.00	Build	Options
Southern	Primary	GREAT SOUTHERN EQUIPMENT, LLC	$587,000.00	Build	Options

Bid Award

Contract: FSA26-EQU24.0, Equipment

Group: Excavator: All Terrain Walking Excavator

Item: 64, Menzi Muck, M425X, M425X

Description: Refer FSA Base Specifications PDF document.

Model Upgrade/Downgrade:

Zone	Rank	Vendor	Price	Build File	Options File
Western	Primary	Menzi Muck USA, Inc.	$540,000.00	Build	Options
Northern	Primary	Menzi Muck USA, Inc.	$540,000.00	Build	Options
Central	Primary	Menzi Muck USA, Inc.	$540,000.00	Build	Options
Southern	Primary	Menzi Muck USA, Inc.	$540,000.00	Build	Options

Bid Award

Contract: FSA26-EQU24.0, Equipment

Group: Excavator: Hydraulic Excavator - 15,590 lbs. Operating Weight

Item: 65, Bobcat, E88, E88

Description: Refer FSA Base Specifications PDF document.

Model Upgrade/Downgrade:

Zone	Rank	Vendor	Price	Build File	Options File
Western	Primary	Doosan Bobcat North America, Inc.	$106,727.00	Build	Options
Northern	Primary	Doosan Bobcat North America, Inc.	$106,727.00	Build	Options
Central	Primary	Doosan Bobcat North America, Inc.	$106,727.00	Build	Options
Southern	Primary	Doosan Bobcat North America, Inc.	$106,727.00	Build	Options

Bid Award

Contract: FSA26-EQU24.0, Equipment

Group: Excavator: Hydraulic Excavator - 15,590 lbs. Operating Weight

Item: 66, Case, CX80C, CX80C

Description: Refer FSA Base Specifications PDF document.

Model Upgrade/Downgrade:

Zone	Rank	Vendor	Price	Build File	Options File
Western	Primary	Innovative Equipment Services 2 LLC CASE Power & Equipment of Florida	$119,732.00	Build	Options
Northern	Primary	Innovative Equipment Services 2 LLC CASE Power & Equipment of Florida	$119,732.00	Build	Options
Central	Primary	Innovative Equipment Services 2 LLC CASE Power & Equipment of Florida	$119,732.00	Build	Options
Southern	Primary	Innovative Equipment Services 2 LLC CASE Power & Equipment of Florida	$119,732.00	Build	Options

Bid Award

Contract: FSA26-EQU24.0, Equipment

Group: Excavator: Hydraulic Excavator - 15,590 lbs. Operating Weight

Item: 67, Caterpillar, 308, 308

Description: Refer FSA Base Specifications PDF document.

Model Upgrade/Downgrade:

Zone	Rank	Vendor	Price	Build File	Options File
Western	Primary	Ring Power Corporation	$144,108.00	Build	Options
Northern	Primary	Ring Power Corporation	$144,108.00	Build	Options
Central	Primary	Ring Power Corporation	$144,108.00	Build	Options
Southern	Primary	Kelly Tractor Co	$129,665.00	Build	Options

Bid Award

Contract: FSA26-EQU24.0, Equipment

Group: Excavator: Hydraulic Excavator - 15,590 lbs. Operating Weight

Item: 68, DEVELON, DX89R-7, DX89R-7

Description: Refer FSA Base Specifications PDF document.

Model Upgrade/Downgrade:

Zone	Rank	Vendor	Price	Build File	Options File
Western	Primary	HD CONSTRUCTION EQUIPMENT DEVELON NORTH AMERICA LLC	$96,927.00	Build	Options
Northern	Primary	HD CONSTRUCTION EQUIPMENT DEVELON NORTH AMERICA LLC	$96,927.00	Build	Options
Central	Primary	HD CONSTRUCTION EQUIPMENT DEVELON NORTH AMERICA LLC	$96,927.00	Build	Options
Southern	Primary	HD CONSTRUCTION EQUIPMENT DEVELON NORTH AMERICA LLC	$96,927.00	Build	Options

Bid Award

Contract: FSA26-EQU24.0, Equipment

Group: Excavator: Hydraulic Excavator - 15,590 lbs. Operating Weight

Item: 69, Hitachi, ZX75US, ZX75US

Description: Refer FSA Base Specifications PDF document.

Model Upgrade/Downgrade:

Zone	Rank	Vendor	Price	Build File	Options File
Western	Primary	GREAT SOUTHERN EQUIPMENT, LLC	$110,552.00	Build	Options
Northern	Primary	GREAT SOUTHERN EQUIPMENT, LLC	$110,552.00	Build	Options
Central	Primary	GREAT SOUTHERN EQUIPMENT, LLC	$110,552.00	Build	Options
Southern	Primary	GREAT SOUTHERN EQUIPMENT, LLC	$110,552.00	Build	Options

Bid Award

Contract: FSA26-EQU24.0, Equipment

Group: Excavator: Hydraulic Excavator - 15,590 lbs. Operating Weight

Item: 70, Hyundai, HX90A, HX90A

Description: Refer FSA Base Specifications PDF document.

Model Upgrade/Downgrade:

Zone	Rank	Vendor	Price	Build File	Options File
Western	Primary	National Equipment Dealers, LLC	$124,375.00	Build	Options
Northern	Primary	National Equipment Dealers, LLC	$124,375.00	Build	Options
Central	Primary	National Equipment Dealers, LLC	$124,375.00	Build	Options
Southern	Primary	National Equipment Dealers, LLC	$124,375.00	Build	Options

Bid Award

Contract: FSA26-EQU24.0, Equipment

Group: Excavator: Hydraulic Excavator - 15,590 lbs. Operating Weight

Item: 71, John Deere, 75P, 75P

Description: Refer FSA Base Specifications PDF document.

Model Upgrade/Downgrade:

Zone	Rank	Vendor	Price	Build File	Options File
Western	Primary	Dobbs Equipment, LLC	$122,400.00	Build	Options
Northern	Primary	Dobbs Equipment, LLC	$122,400.00	Build	Options
Central	Primary	Dobbs Equipment, LLC	$119,850.00	Build	Options
Southern	Primary	Dobbs Equipment, LLC	$119,850.00	Build	Options

Bid Award

Contract: FSA26-EQU24.0, Equipment

Group: Excavator: Hydraulic Excavator - 15,590 lbs. Operating Weight

Item: 72, Kubota, KX080-5R3, KX080-5R3

Description: Refer FSA Base Specifications PDF document.

Model Upgrade/Downgrade:

Zone	Rank	Vendor	Price	Build File	Options File
Western	Primary	Creel Tractor Company	$101,450.00	Build	Options
Northern	Primary Alternate	Creel Tractor Company Florida Coast Equipment, Inc.	$101,050.00 $102,700.00	Build Build	Options Options
Central	Primary Alternate	Creel Tractor Company Florida Coast Equipment, Inc.	$100,950.00 $102,700.00	Build Build	Options Options
Southern	Primary Alternate	Creel Tractor Company Florida Coast Equipment, Inc.	$100,650.00 $102,700.00	Build Build	Options Options

Bid Award

Contract: FSA26-EQU24.0, Equipment

Group: Excavator: Hydraulic Excavator - 15,590 lbs. Operating Weight

Item: 73, Link-Belt, 75X3, 75X3

Description: Refer FSA Base Specifications PDF document.

Model Upgrade/Downgrade:

Zone	Rank	Vendor	Price	Build File	Options File
Western	Primary	GREAT SOUTHERN EQUIPMENT, LLC	$96,645.00	Build	Options
Northern	Primary	GREAT SOUTHERN EQUIPMENT, LLC	$96,645.00	Build	Options
Central	Primary	GREAT SOUTHERN EQUIPMENT, LLC	$96,645.00	Build	Options
Southern	Primary	GREAT SOUTHERN EQUIPMENT, LLC	$96,645.00	Build	Options

Bid Award

Contract: FSA26-EQU24.0, Equipment

Group: Excavator: Hydraulic Excavator - 15,590 lbs. Operating Weight

Item: 75, New Holland, Midi Excavator, E70D

Description: Refer FSA Base Specifications PDF document.

Model Upgrade/Downgrade:

Zone	Rank	Vendor	Price	Build File	Options File
Western	Primary	Love Power Equipment, Inc	$113,340.00	Build	Options
Northern	Primary	Love Power Equipment, Inc	$110,340.00	Build	Options
Central	Primary	Love Power Equipment, Inc	$110,340.00	Build	Options
Southern	Primary	Love Power Equipment, Inc	$113,340.00	Build	Options

Bid Award

Contract: FSA26-EQU24.0, Equipment

Group: Excavator: Hydraulic Excavator - 15,590 lbs. Operating Weight

Item: 77, Takeuchi, TB290, TB290

Description: Refer FSA Base Specifications PDF document.

Model Upgrade/Downgrade:

Zone	Rank	Vendor	Price	Build File	Options File
Western	Primary	Cowin Equipment Company	$113,546.00	Build	Options
Northern	Primary	Alta Construction Equipment Florida, LLC	$113,000.00	Build	Options
Central	Primary	Alta Construction Equipment Florida, LLC	$113,000.00	Build	Options
Southern	Primary	Alta Construction Equipment Florida, LLC	$113,000.00	Build	Options

Bid Award

Contract: FSA26-EQU24.0, Equipment

Group: Excavator: Hydraulic Excavator - 15,590 lbs. Operating Weight

Item: 78, Volvo, ECR90, ECR90

Description: Refer FSA Base Specifications PDF document.

Model Upgrade/Downgrade:

Zone	Rank	Vendor	Price	Build File	Options File
Western	Primary	Cowin Equipment Company	$129,493.00	Build	Options
Northern	Primary	Alta Construction Equipment Florida, LLC	$130,000.00	Build	Options
Central	Primary	Alta Construction Equipment Florida, LLC	$130,000.00	Build	Options
Southern	Primary	Alta Construction Equipment Florida, LLC	$130,000.00	Build	Options

Bid Award

Contract: FSA26-EQU24.0, Equipment

Group: Excavator: Hydraulic Excavator - 15,590 lbs. Operating Weight

Item: 79, Yanmar, Vi080-7, Vi080-7

Description: Refer FSA Base Specifications PDF document.

Model Upgrade/Downgrade:

Zone	Rank	Vendor	Price	Build File	Options File
Western	Primary	National Equipment Dealers, LLC	$140,000.00	Build	Options
Northern	Primary	National Equipment Dealers, LLC	$140,000.00	Build	Options
Central	Primary	National Equipment Dealers, LLC	$140,000.00	Build	Options
Southern	Primary	National Equipment Dealers, LLC	$140,000.00	Build	Options

Bid Award

Contract: FSA26-EQU24.0, Equipment

Group: Excavator: Hydraulic Excavator - 38,000 lbs. Operating Weight

Item: 80, Bobcat, E165, E165

Description: Refer FSA Base Specifications PDF document.

Model Upgrade/Downgrade:

Zone	Rank	Vendor	Price	Build File	Options File
Western	Primary	Doosan Bobcat North America, Inc.	$148,165.00	Build	Options
Northern	Primary	Doosan Bobcat North America, Inc.	$148,165.00	Build	Options
Central	Primary	Doosan Bobcat North America, Inc.	$148,165.00	Build	Options
Southern	Primary	Doosan Bobcat North America, Inc.	$148,165.00	Build	Options

Bid Award

Contract: FSA26-EQU24.0, Equipment

Group: Excavator: Hydraulic Excavator - 38,000 lbs. Operating Weight

Item: 81, Case, CX170E, CX170E

Description: Refer FSA Base Specifications PDF document.

Model Upgrade/Downgrade:

Zone	Rank	Vendor	Price	Build File	Options File
Western	Primary	Innovative Equipment Services 2 LLC CASE Power & Equipment of Florida	$239,397.00	Build	Options
Northern	Primary	Innovative Equipment Services 2 LLC CASE Power & Equipment of Florida	$239,397.00	Build	Options
Central	Primary	Innovative Equipment Services 2 LLC CASE Power & Equipment of Florida	$239,397.00	Build	Options
Southern	Primary	Innovative Equipment Services 2 LLC CASE Power & Equipment of Florida	$239,397.00	Build	Options

Bid Award

Contract: FSA26-EQU24.0, Equipment

Group: Excavator: Hydraulic Excavator - 38,000 lbs. Operating Weight

Item: 82, Caterpillar, 317 GC, 317 GC

Description: Refer FSA Base Specifications PDF document.

Model Upgrade/Downgrade:

Zone	Rank	Vendor	Price	Build File	Options File
Western	Primary	Ring Power Corporation	$225,372.00	Build	Options
Northern	Primary	Ring Power Corporation	$225,372.00	Build	Options
Central	Primary	Ring Power Corporation	$225,372.00	Build	Options
Southern	Primary	Kelly Tractor Co	$203,330.00	Build	Options

Bid Award

Contract: FSA26-EQU24.0, Equipment

Group: Excavator: Hydraulic Excavator - 38,000 lbs. Operating Weight

Item: 83, DEVELON, DX170LC-7, DX170LC-7

Description: Refer FSA Base Specifications PDF document.

Model Upgrade/Downgrade:

Zone	Rank	Vendor	Price	Build File	Options File
Western	Primary	HD CONSTRUCTION EQUIPMENT DEVELON NORTH AMERICA LLC	$148,228.00	Build	Options
Northern	Primary	HD CONSTRUCTION EQUIPMENT DEVELON NORTH AMERICA LLC	$148,228.00	Build	Options
Central	Primary	HD CONSTRUCTION EQUIPMENT DEVELON NORTH AMERICA LLC	$148,228.00	Build	Options
Southern	Primary	HD CONSTRUCTION EQUIPMENT DEVELON NORTH AMERICA LLC	$148,228.00	Build	Options

Bid Award

Contract: FSA26-EQU24.0, Equipment

Group: Excavator: Hydraulic Excavator - 38,000 lbs. Operating Weight

Item: 84, Hitachi, ZX160LC, ZX160LC

Description: Refer FSA Base Specifications PDF document.

Model Upgrade/Downgrade:

Zone	Rank	Vendor	Price	Build File	Options File
Western	Primary	GREAT SOUTHERN EQUIPMENT, LLC	$197,757.00	Build	Options
Northern	Primary	GREAT SOUTHERN EQUIPMENT, LLC	$197,757.00	Build	Options
Central	Primary	GREAT SOUTHERN EQUIPMENT, LLC	$197,757.00	Build	Options
Southern	Primary	GREAT SOUTHERN EQUIPMENT, LLC	$197,757.00	Build	Options

Bid Award

Contract: FSA26-EQU24.0, Equipment

Group: Excavator: Hydraulic Excavator - 38,000 lbs. Operating Weight

Item: 85, Hyundai, HX160AL, HX160AL

Description: Refer FSA Base Specifications PDF document.

Model Upgrade/Downgrade:

Zone	Rank	Vendor	Price	Build File	Options File
Western	Primary	National Equipment Dealers, LLC	$195,185.00	Build	Options
Northern	Primary	National Equipment Dealers, LLC	$195,185.00	Build	Options
Central	Primary	National Equipment Dealers, LLC	$195,185.00	Build	Options
Southern	Primary	National Equipment Dealers, LLC	$195,185.00	Build	Options

Bid Award

Contract: FSA26-EQU24.0, Equipment

Group: Excavator: Hydraulic Excavator - 38,000 lbs. Operating Weight

Item: 86, John Deere, 160P, 160P

Description: Refer FSA Base Specifications PDF document.

Model Upgrade/Downgrade:

Zone	Rank	Vendor	Price	Build File	Options File
Western	Primary	Dobbs Equipment, LLC	$217,645.00	Build	Options
Northern	Primary	Dobbs Equipment, LLC	$217,645.00	Build	Options
Central	Primary	Dobbs Equipment, LLC	$212,925.00	Build	Options
Southern	Primary	Dobbs Equipment, LLC	$212,925.00	Build	Options

Bid Award

Contract: FSA26-EQU24.0, Equipment

Group: Excavator: Hydraulic Excavator - 38,000 lbs. Operating Weight

Item: 88, Link-Belt, 170X4, 170X4

Description: Refer FSA Base Specifications PDF document.

Model Upgrade/Downgrade:

Zone	Rank	Vendor	Price	Build File	Options File
Western	Primary	GREAT SOUTHERN EQUIPMENT, LLC	$185,663.00	Build	Options
Northern	Primary	GREAT SOUTHERN EQUIPMENT, LLC	$185,663.00	Build	Options
Central	Primary	GREAT SOUTHERN EQUIPMENT, LLC	$185,663.00	Build	Options
Southern	Primary	GREAT SOUTHERN EQUIPMENT, LLC	$185,663.00	Build	Options

Bid Award

Contract: FSA26-EQU24.0, Equipment

Group: Excavator: Hydraulic Excavator - 38,000 lbs. Operating Weight

Item: 90, Volvo, EC160, EC160

Description: Refer FSA Base Specifications PDF document.

Model Upgrade/Downgrade:

Zone	Rank	Vendor	Price	Build File	Options File
Western	Primary	Cowin Equipment Company	$186,390.00	Build	Options
Northern	Primary	Alta Construction Equipment Florida, LLC	$187,000.00	Build	Options
Central	Primary	Alta Construction Equipment Florida, LLC	$187,000.00	Build	Options
Southern	Primary	Alta Construction Equipment Florida, LLC	$187,000.00	Build	Options

Bid Award

Contract: FSA26-EQU24.0, Equipment

Group: Excavator: Hydraulic Excavator - 76,550 lbs. Operating Weight

Item: 91, Case, CX350D, CX350D

Description: Refer FSA Base Specifications PDF document.

Model Upgrade/Downgrade:

Zone	Rank	Vendor	Price	Build File	Options File
Western	Primary	Innovative Equipment Services 2 LLC CASE Power & Equipment of Florida	$456,142.00	Build	Options
Northern	Primary	Innovative Equipment Services 2 LLC CASE Power & Equipment of Florida	$456,142.00	Build	Options
Central	Primary	Innovative Equipment Services 2 LLC CASE Power & Equipment of Florida	$456,142.00	Build	Options
Southern	Primary	Innovative Equipment Services 2 LLC CASE Power & Equipment of Florida	$456,142.00	Build	Options

Bid Award

Contract: FSA26-EQU24.0, Equipment

Group: Excavator: Hydraulic Excavator - 76,550 lbs. Operating Weight

Item: 92, Caterpillar, 336, 336

Description: Refer FSA Base Specifications PDF document.

Model Upgrade/Downgrade:

Zone	Rank	Vendor	Price	Build File	Options File
Western	Primary	Ring Power Corporation	$402,076.00	Build	Options
Northern	Primary	Ring Power Corporation	$402,076.00	Build	Options
Central	Primary	Ring Power Corporation	$402,076.00	Build	Options
Southern	Primary	Kelly Tractor Co	$378,695.00	Build	Options

Bid Award

Contract: FSA26-EQU24.0, Equipment

Group: Excavator: Hydraulic Excavator - 76,550 lbs. Operating Weight

Item: 93, DEVELON, DX350LC-7, DX350LC-7

Description: Refer FSA Base Specifications PDF document.

Model Upgrade/Downgrade:

Zone	Rank	Vendor	Price	Build File	Options File
Western	Primary	HD CONSTRUCTION EQUIPMENT DEVELON NORTH AMERICA LLC	$306,733.00	Build	Options
Northern	Primary	HD CONSTRUCTION EQUIPMENT DEVELON NORTH AMERICA LLC	$306,733.00	Build	Options
Central	Primary	HD CONSTRUCTION EQUIPMENT DEVELON NORTH AMERICA LLC	$306,733.00	Build	Options
Southern	Primary	HD CONSTRUCTION EQUIPMENT DEVELON NORTH AMERICA LLC	$306,733.00	Build	Options

Bid Award

Contract: FSA26-EQU24.0, Equipment

Group: Excavator: Hydraulic Excavator - 76,550 lbs. Operating Weight

Item: 94, Hitachi, ZX350, ZX350

Description: Refer FSA Base Specifications PDF document.

Model Upgrade/Downgrade:

Zone	Rank	Vendor	Price	Build File	Options File
Western	Primary	GREAT SOUTHERN EQUIPMENT, LLC	$311,566.00	Build	Options
Northern	Primary	GREAT SOUTHERN EQUIPMENT, LLC	$311,566.00	Build	Options
Central	Primary	GREAT SOUTHERN EQUIPMENT, LLC	$311,566.00	Build	Options
Southern	Primary	GREAT SOUTHERN EQUIPMENT, LLC	$311,566.00	Build	Options

Bid Award

Contract: FSA26-EQU24.0, Equipment

Group: Excavator: Hydraulic Excavator - 76,550 lbs. Operating Weight

Item: 96, Hyundai, HX350AL, HX350AL

Description: Refer FSA Base Specifications PDF document.

Model Upgrade/Downgrade:

Zone	Rank	Vendor	Price	Build File	Options File
Western	Primary	National Equipment Dealers, LLC	$339,304.00	Build	Options
Northern	Primary	National Equipment Dealers, LLC	$339,304.00	Build	Options
Central	Primary	National Equipment Dealers, LLC	$339,304.00	Build	Options
Southern	Primary	National Equipment Dealers, LLC	$339,304.00	Build	Options

Bid Award

Contract: FSA26-EQU24.0, Equipment

Group: Excavator: Hydraulic Excavator - 76,550 lbs. Operating Weight

Item: 97, John Deere, 350P, 350P

Description: Refer FSA Base Specifications PDF document.

Model Upgrade/Downgrade:

Zone	Rank	Vendor	Price	Build File	Options File
Western	Primary	Dobbs Equipment, LLC	$378,425.00	Build	Options
Northern	Primary	Dobbs Equipment, LLC	$378,425.00	Build	Options
Central	Primary	Dobbs Equipment, LLC	$370,185.00	Build	Options
Southern	Primary	Dobbs Equipment, LLC	$370,185.00	Build	Options

Bid Award

Contract: FSA26-EQU24.0, Equipment

Group: Excavator: Hydraulic Excavator - 76,550 lbs. Operating Weight

Item: 99, Link-Belt, 370X4, 370X4

Description: Refer FSA Base Specifications PDF document.

Model Upgrade/Downgrade:

Zone	Rank	Vendor	Price	Build File	Options File
Western	Primary	GREAT SOUTHERN EQUIPMENT, LLC	$312,503.00	Build	Options
Northern	Primary	GREAT SOUTHERN EQUIPMENT, LLC	$312,503.00	Build	Options
Central	Primary	GREAT SOUTHERN EQUIPMENT, LLC	$312,503.00	Build	Options
Southern	Primary	GREAT SOUTHERN EQUIPMENT, LLC	$312,503.00	Build	Options

Bid Award

Contract: FSA26-EQU24.0, Equipment

Group: Excavator: Hydraulic Excavator - 76,550 lbs. Operating Weight

Item: 101, Volvo, EC370, EC370

Description: Refer FSA Base Specifications PDF document.

Model Upgrade/Downgrade:

Zone	Rank	Vendor	Price	Build File	Options File
Western	Primary	Cowin Equipment Company	$349,862.00	Build	Options
Northern	Primary	Alta Construction Equipment Florida, LLC	$350,000.00	Build	Options
Central	Primary	Alta Construction Equipment Florida, LLC	$350,000.00	Build	Options
Southern	Primary	Alta Construction Equipment Florida, LLC	$350,000.00	Build	Options

Bid Award

Contract: FSA26-EQU24.0, Equipment

Group: Excavator: Mini Hydraulic Excavator - 7,105 lbs. Operating Weight

Item: 102, Bobcat, E32, E32

Description: Refer FSA Base Specifications PDF document.

Model Upgrade/Downgrade:

Zone	Rank	Vendor	Price	Build File	Options File
Western	Primary	Doosan Bobcat North America, Inc.	$45,615.00	Build	Options
Northern	Primary	Doosan Bobcat North America, Inc.	$45,615.00	Build	Options
Central	Primary	Doosan Bobcat North America, Inc.	$45,615.00	Build	Options
Southern	Primary	Doosan Bobcat North America, Inc.	$45,615.00	Build	Options

Bid Award

Contract: FSA26-EQU24.0, Equipment

Group: Excavator: Mini Hydraulic Excavator - 7,105 lbs. Operating Weight

Item: 103, Case, CX37C, CX37C

Description: Refer FSA Base Specifications PDF document.

Model Upgrade/Downgrade:

Zone	Rank	Vendor	Price	Build File	Options File
Western	Primary	Innovative Equipment Services 2 LLC CASE Power & Equipment of Florida	$52,212.00	Build	Options
Northern	Primary	Innovative Equipment Services 2 LLC CASE Power & Equipment of Florida	$52,212.00	Build	Options
Central	Primary	Innovative Equipment Services 2 LLC CASE Power & Equipment of Florida	$52,212.00	Build	Options
Southern	Primary	Innovative Equipment Services 2 LLC CASE Power & Equipment of Florida	$52,212.00	Build	Options

Bid Award

Contract: FSA26-EQU24.0, Equipment

Group: Excavator: Mini Hydraulic Excavator - 7,105 lbs. Operating Weight

Item: 104, Caterpillar, 303, 303

Description: Refer FSA Base Specifications PDF document.

Model Upgrade/Downgrade:

Zone	Rank	Vendor	Price	Build File	Options File
Western	Primary	Ring Power Corporation	$52,794.00	Build	Options
Northern	Primary	Ring Power Corporation	$52,794.00	Build	Options
Central	Primary	Ring Power Corporation	$52,794.00	Build	Options
Southern	Primary	Kelly Tractor Co	$50,930.00	Build	Options

Bid Award

Contract: FSA26-EQU24.0, Equipment

Group: Excavator: Mini Hydraulic Excavator - 7,105 lbs. Operating Weight

Item: 105, DEVELON, DX35Z-7, DX35Z-7

Description: Refer FSA Base Specifications PDF document.

Model Upgrade/Downgrade:

Zone	Rank	Vendor	Price	Build File	Options File
Western	Primary	HD CONSTRUCTION EQUIPMENT DEVELON NORTH AMERICA LLC	$43,843.00	Build	Options
Northern	Primary	HD CONSTRUCTION EQUIPMENT DEVELON NORTH AMERICA LLC	$43,843.00	Build	Options
Central	Primary	HD CONSTRUCTION EQUIPMENT DEVELON NORTH AMERICA LLC	$43,843.00	Build	Options
Southern	Primary	HD CONSTRUCTION EQUIPMENT DEVELON NORTH AMERICA LLC	$43,843.00	Build	Options

Bid Award

Contract: FSA26-EQU24.0, Equipment

Group: Excavator: Mini Hydraulic Excavator - 7,105 lbs. Operating Weight

Item: 106, Hitachi, ZX35-U, ZX35-U

Description: Refer FSA Base Specifications PDF document.

Model Upgrade/Downgrade:

Zone	Rank	Vendor	Price	Build File	Options File
Western	Primary	GREAT SOUTHERN EQUIPMENT, LLC	$55,595.00	Build	Options
Northern	Primary	GREAT SOUTHERN EQUIPMENT, LLC	$55,595.00	Build	Options
Central	Primary	GREAT SOUTHERN EQUIPMENT, LLC	$55,595.00	Build	Options
Southern	Primary	GREAT SOUTHERN EQUIPMENT, LLC	$55,595.00	Build	Options

Bid Award

Contract: FSA26-EQU24.0, Equipment

Group: Excavator: Mini Hydraulic Excavator - 7,105 lbs. Operating Weight

Item: 107, Hyundai, HX35AZ, HX35AZ

Description: Refer FSA Base Specifications PDF document.

Model Upgrade/Downgrade:

Zone	Rank	Vendor	Price	Build File	Options File
Western	Primary	National Equipment Dealers, LLC	$54,933.00	Build	Options
Northern	Primary	National Equipment Dealers, LLC	$54,933.00	Build	Options
Central	Primary	National Equipment Dealers, LLC	$54,933.00	Build	Options
Southern	Primary	National Equipment Dealers, LLC	$54,933.00	Build	Options

Bid Award

Contract: FSA26-EQU24.0, Equipment

Group: Excavator: Mini Hydraulic Excavator - 7,105 lbs. Operating Weight

Item: 108, John Deere, 35P, 35P

Description: Refer FSA Base Specifications PDF document.

Model Upgrade/Downgrade:

Zone	Rank	Vendor	Price	Build File	Options File
Western	Primary	Everglades Equipment Group	$51,500.00	Build	Options
	Alternate	Dobbs Equipment, LLC	$56,560.00	Build	Options
Northern	Primary	Everglades Equipment Group	$51,500.00	Build	Options
	Alternate	Dobbs Equipment, LLC	$56,560.00	Build	Options
Central	Primary	Everglades Equipment Group	$51,500.00	Build	Options
	Alternate	Dobbs Equipment, LLC	$55,560.00	Build	Options
Southern	Primary	Everglades Equipment Group	$51,500.00	Build	Options
	Alternate	Dobbs Equipment, LLC	$55,560.00	Build	Options

Bid Award

Contract: FSA26-EQU24.0, Equipment

Group: Excavator: Mini Hydraulic Excavator - 7,105 lbs. Operating Weight

Item: 109, Kubota, U35, U35-4R1

Description: Refer FSA Base Specifications PDF document.

Model Upgrade/Downgrade:

Zone	Rank	Vendor	Price	Build File	Options File
Western	Primary	Creel Tractor Company	$41,429.00	Build	Options
Northern	Primary Alternate	Creel Tractor Company Florida Coast Equipment, Inc.	$41,229.00 $42,921.00	Build Build	Options Options
Central	Primary Alternate	Creel Tractor Company Florida Coast Equipment, Inc.	$40,929.00 $42,921.00	Build Build	Options Options
Southern	Primary Alternate	Creel Tractor Company Florida Coast Equipment, Inc.	$40,679.00 $42,921.00	Build Build	Options Options

Bid Award

Contract: FSA26-EQU24.0, Equipment

Group: Excavator: Mini Hydraulic Excavator - 7,105 lbs. Operating Weight

Item: 110, New Holland, Compact Excavator, E37C

Description: Refer FSA Base Specifications PDF document.

Model Upgrade/Downgrade:

Zone	Rank	Vendor	Price	Build File	Options File
Western	Primary	Love Power Equipment, Inc	$59,000.00	Build	Options
Northern	Primary	Love Power Equipment, Inc	$59,000.00	Build	Options
Central	Primary	Love Power Equipment, Inc	$58,000.00	Build	Options
Southern	Primary	Love Power Equipment, Inc	$59,000.00	Build	Options

Bid Award

Contract: FSA26-EQU24.0, Equipment

Group: Excavator: Mini Hydraulic Excavator - 7,105 lbs. Operating Weight

Item: 112, Takeuchi, TB240, TB240

Description: Refer FSA Base Specifications PDF document.

Model Upgrade/Downgrade:

Zone	Rank	Vendor	Price	Build File	Options File
Western	Primary	Cowin Equipment Company	$53,987.00	Build	Options
Northern	Primary	Alta Construction Equipment Florida, LLC	$54,000.00	Build	Options
Central	Primary	Alta Construction Equipment Florida, LLC	$54,000.00	Build	Options
Southern	Primary	Alta Construction Equipment Florida, LLC	$54,000.00	Build	Options

Bid Award

Contract: FSA26-EQU24.0, Equipment

Group: Excavator: Mini Hydraulic Excavator - 7,105 lbs. Operating Weight

Item: 113, Volvo, EC37, EC37

Description: Refer FSA Base Specifications PDF document.

Model Upgrade/Downgrade:

Zone	Rank	Vendor	Price	Build File	Options File
Western	Primary	Cowin Equipment Company	$60,095.00	Build	Options
Northern	Primary	Alta Construction Equipment Florida, LLC	$60,000.00	Build	Options
Central	Primary	Alta Construction Equipment Florida, LLC	$60,000.00	Build	Options
Southern	Primary	Alta Construction Equipment Florida, LLC	$60,000.00	Build	Options

Bid Award

Contract: FSA26-EQU24.0, Equipment

Group: Excavator: Mini Hydraulic Excavator - 7,105 lbs. Operating Weight

Item: 114, Yanmar, Vi035-7, Vi035-7

Description: Refer FSA Base Specifications PDF document.

Model Upgrade/Downgrade:

Zone	Rank	Vendor	Price	Build File	Options File
Western	Primary	National Equipment Dealers, LLC	$64,300.00	Build	Options
Northern	Primary	National Equipment Dealers, LLC	$64,300.00	Build	Options
Central	Primary	National Equipment Dealers, LLC	$64,300.00	Build	Options
Southern	Primary	National Equipment Dealers, LLC	$64,300.00	Build	Options

Bid Award

Contract: FSA26-EQU24.0, Equipment

Group: Excavator: Telescopic Excavator - 45,000 lbs. Operating Weight - Tracked Type

Item: 115, Gradall, XL4200, XL4200

Description: Refer FSA Base Specifications PDF document.

Model Upgrade/Downgrade:

Zone	Rank	Vendor	Price	Build File	Options File
Western	Primary	GREAT SOUTHERN EQUIPMENT, LLC	$434,650.00	Build	Options
Northern	Primary	GREAT SOUTHERN EQUIPMENT, LLC	$434,650.00	Build	Options
Central	Primary	GREAT SOUTHERN EQUIPMENT, LLC	$434,650.00	Build	Options
Southern	Primary	GREAT SOUTHERN EQUIPMENT, LLC	$434,650.00	Build	Options

Bid Award

Contract: FSA26-EQU24.0, Equipment

Group: Excavator: Telescopic Excavator - 47,000 lbs. Operating Weight - 6x6 Wheeled Type

Item: 116, Gradall, XL4100, XL4100

Description: Refer FSA Base Specifications PDF document.

Model Upgrade/Downgrade:

Zone	Rank	Vendor	Price	Build File	Options File
Western	Primary	GREAT SOUTHERN EQUIPMENT, LLC	$608,922.00	Build	Options
Northern	Primary	GREAT SOUTHERN EQUIPMENT, LLC	$608,922.00	Build	Options
Central	Primary	GREAT SOUTHERN EQUIPMENT, LLC	$608,922.00	Build	Options
Southern	Primary	GREAT SOUTHERN EQUIPMENT, LLC	$608,922.00	Build	Options

Bid Award

Contract: FSA26-EQU24.0, Equipment

Group: Excavator: Vacuum Excavator - Trailer Mounted

Item: 118, Truvac, TRXX, TRXX 800

Description: Refer FSA Base Specifications PDF document.

Model Upgrade/Downgrade:

Zone	Rank	Vendor	Price	Build File	Options File
Western	Primary	Environmental Products Group	$142,484.00	Build	Options
Northern	Primary	Environmental Products Group	$142,484.00	Build	Options
Central	Primary	Environmental Products Group	$142,484.00	Build	Options
Southern	Primary	Environmental Products Group	$142,484.00	Build	Options

Bid Award

Contract: FSA26-EQU24.0, Equipment

Group: Excavator: Vacuum Excavator - Trailer Mounted

Item: 119, Vac-Con, Mudslinger, MS800

Description: Refer FSA Base Specifications PDF document.

Model Upgrade/Downgrade:

Zone	Rank	Vendor	Price	Build File	Options File
Western	Primary	Southern Sewer Equipment Sales	$145,261.00	Build	Options
Northern	Primary	Southern Sewer Equipment Sales	$145,261.00	Build	Options
Central	Primary	Southern Sewer Equipment Sales	$145,261.00	Build	Options
Southern	Primary	Southern Sewer Equipment Sales	$145,261.00	Build	Options

Bid Award

Contract: FSA26-EQU24.0, Equipment

Group: Excavator: Vacuum Excavator - Trailer Mounted

Item: 120, Vermeer, LP873SDT, LP873SDT

Description: Refer FSA Base Specifications PDF document.

Model Upgrade/Downgrade:

Zone	Rank	Vendor	Price	Build File	Options File
Western	Primary	Vermeer Southeast Sales	$123,854.00	Build	Options
Northern	Primary	Vermeer Southeast Sales	$123,854.00	Build	Options
Central	Primary	Vermeer Southeast Sales	$123,854.00	Build	Options
Southern	Primary	Vermeer Southeast Sales	$123,854.00	Build	Options

Bid Award

Contract: FSA26-EQU24.0, Equipment

Group: Excavator: Vacuum Excavator Body, Truck Mounted - 12 cubic yd.

Item: 122, Gapvax, VHE, 1012

Description: Refer FSA Base Specifications PDF document.

Model Upgrade/Downgrade:

Zone	Rank	Vendor	Price	Build File	Options File
Western	Primary	Evervac Equipment	$399,402.00	Build	Options
Northern	Primary	Evervac Equipment	$399,402.00	Build	Options
Central	Primary	Evervac Equipment	$399,402.00	Build	Options
Southern	Primary	Evervac Equipment	$399,402.00	Build	Options

Bid Award

Contract: FSA26-EQU24.0, Equipment

Group: Excavator: Vacuum Excavator Body, Truck Mounted - 12 cubic yd.

Item: 123, Truvac, HXX, HXX

Description: Refer FSA Base Specifications PDF document.

Model Upgrade/Downgrade:

Zone	Rank	Vendor	Price	Build File	Options File
Western	Primary	Environmental Products Group	$402,542.00	Build	Options
Northern	Primary	Environmental Products Group	$402,542.00	Build	Options
Central	Primary	Environmental Products Group	$402,542.00	Build	Options
Southern	Primary	Environmental Products Group	$402,542.00	Build	Options

Bid Award

Contract: FSA26-EQU24.0, Equipment

Group: Excavator: Vacuum Excavator Body, Truck Mounted - 12 cubic yd.

Item: 124, Sewer Equipment, Ramvac, HX-12

Description: Refer FSA Base Specifications PDF document.

Model Upgrade/Downgrade:

Zone	Rank	Vendor	Price	Build File	Options File
Western	Primary	Jet-Vac Equipment Company, LLC	$399,148.00	Build	Options
Northern	Primary	Jet-Vac Equipment Company, LLC	$399,148.00	Build	Options
Central	Primary	Jet-Vac Equipment Company, LLC	$399,148.00	Build	Options
Southern	Primary	Jet-Vac Equipment Company, LLC	$399,148.00	Build	Options

Bid Award

Contract: FSA26-EQU24.0, Equipment

Group: Excavator: Vacuum Excavator Body, Truck Mounted - 12 cubic yd.

Item: 125, Vac-Con, MXT, VMXTPD3612/1100

Description: Refer FSA Base Specifications PDF document.

Model Upgrade/Downgrade:

Zone	Rank	Vendor	Price	Build File	Options File
Western	Primary	Southern Sewer Equipment Sales	$371,523.00	Build	Options
Northern	Primary	Southern Sewer Equipment Sales	$371,523.00	Build	Options
Central	Primary	Southern Sewer Equipment Sales	$371,523.00	Build	Options
Southern	Primary	Southern Sewer Equipment Sales	$371,523.00	Build	Options

Bid Award

Contract: FSA26-EQU24.0, Equipment

Group: Excavator: Vacuum Excavator Body, Truck Mounted - 12 cubic yd.

Item: 126, Vermeer, Vacuum Excavator, VXT300

Description: Refer FSA Base Specifications PDF document.

Model Upgrade/Downgrade:

Zone	Rank	Vendor	Price	Build File	Options File
Western	Primary	Vermeer Southeast Sales	$439,719.00	Build	Options
Northern	Primary	Vermeer Southeast Sales	$439,719.00	Build	Options
Central	Primary	Vermeer Southeast Sales	$439,719.00	Build	Options
Southern	Primary	Vermeer Southeast Sales	$439,719.00	Build	Options

Bid Award

Contract: FSA26-EQU24.0, Equipment

Group: Excavator: Wheeled Hydraulic Excavator - 42,000 lbs. Operating Weight

Item: 127, Case, WX210E, WX21OE

Description: Refer FSA Base Specifications PDF document.

Model Upgrade/Downgrade:

Zone	Rank	Vendor	Price	Build File	Options File
Western	Primary	Innovative Equipment Services 2 LLC CASE Power & Equipment of Florida	$344,759.00	Build	Options
Northern	Primary	Innovative Equipment Services 2 LLC CASE Power & Equipment of Florida	$344,759.00	Build	Options
Central	Primary	Innovative Equipment Services 2 LLC CASE Power & Equipment of Florida	$344,759.00	Build	Options
Southern	Primary	Innovative Equipment Services 2 LLC CASE Power & Equipment of Florida	$344,759.00	Build	Options

Bid Award

Contract: FSA26-EQU24.0, Equipment

Group: Excavator: Wheeled Hydraulic Excavator - 42,000 lbs. Operating Weight

Item: 128, Caterpillar, M318, M318

Description: Refer FSA Base Specifications PDF document.

Model Upgrade/Downgrade:

Zone	Rank	Vendor	Price	Build File	Options File
Western	Primary	Ring Power Corporation	$312,721.00	Build	Options
Northern	Primary	Ring Power Corporation	$312,721.00	Build	Options
Central	Primary	Ring Power Corporation	$312,721.00	Build	Options
Southern	Primary	Kelly Tractor Co	$290,700.00	Build	Options

Bid Award

Contract: FSA26-EQU24.0, Equipment

Group: Excavator: Wheeled Hydraulic Excavator - 42,000 lbs. Operating Weight

Item: 129, DEVELON, DX210W-7K, DX210W-7K

Description: Refer FSA Base Specifications PDF document.

Model Upgrade/Downgrade:

Zone	Rank	Vendor	Price	Build File	Options File
Western	Primary	HD CONSTRUCTION EQUIPMENT DEVELON NORTH AMERICA LLC	$230,309.00	Build	Options
Northern	Primary	HD CONSTRUCTION EQUIPMENT DEVELON NORTH AMERICA LLC	$230,309.00	Build	Options
Central	Primary	HD CONSTRUCTION EQUIPMENT DEVELON NORTH AMERICA LLC	$230,309.00	Build	Options
Southern	Primary	HD CONSTRUCTION EQUIPMENT DEVELON NORTH AMERICA LLC	$230,309.00	Build	Options

Bid Award

Contract: FSA26-EQU24.0, Equipment

Group: Excavator: Wheeled Hydraulic Excavator - 42,000 lbs. Operating Weight

Item: 131, Volvo, EW180, EW180

Description: Refer FSA Base Specifications PDF document.

Model Upgrade/Downgrade:

Zone	Rank	Vendor	Price	Build File	Options File
Western	Primary	Cowin Equipment Company	$284,540.00	Build	Options
Northern	Primary	Alta Construction Equipment Florida, LLC	$286,000.00	Build	Options
Central	Primary	Alta Construction Equipment Florida, LLC	$286,000.00	Build	Options
Southern	Primary	Alta Construction Equipment Florida, LLC	$286,000.00	Build	Options

Bid Award

Contract: FSA26-EQU24.0, Equipment

Group: Excavator: Wheeled Hydraulic Excavator - 42,000 lbs. Operating Weight

Item: 654, Hyundai, HW210A, HW210A

Description: Refer FSA Base Specifications PDF document.

Model Upgrade/Downgrade:

Zone	Rank	Vendor	Price	Build File	Options File
Western	Primary	National Equipment Dealers, LLC	$296,307.00	Build	Options
Northern	Primary	National Equipment Dealers, LLC	$296,307.00	Build	Options
Central	Primary	National Equipment Dealers, LLC	$296,307.00	Build	Options
Southern	Primary	National Equipment Dealers, LLC	$296,307.00	Build	Options

Bid Award

Contract: FSA26-EQU24.0, Equipment

Group: Forklift: Cushion Tire - 4,000 lbs. Capacity

Item: 132, Caterpillar, GC20CN, GC20CN

Description: Refer FSA Base Specifications PDF document.

Model Upgrade/Downgrade:

Zone	Rank	Vendor	Price	Build File	Options File
Western	Primary	Ring Power Corporation	$54,653.00	Build	Options
Northern	Primary	Ring Power Corporation	$54,653.00	Build	Options
Central	Primary	Ring Power Corporation	$54,653.00	Build	Options
Southern	Primary	Kelly Tractor Co	$35,990.00	Build	Options

Bid Award

Contract: FSA26-EQU24.0, Equipment

Group: Forklift: Cushion Tire - 4,000 lbs. Capacity

Item: 133, Clark, S20C, S20C

Description: Refer FSA Base Specifications PDF document.

Model Upgrade/Downgrade:

Zone	Rank	Vendor	Price	Build File	Options File
Western	Primary	National Lift Truck Service	$31,647.00	Build	Options
Northern	Primary	National Lift Truck Service	$31,647.00	Build	Options
Central	Primary	National Lift Truck Service	$31,647.00	Build	Options
Southern	Primary	National Lift Truck Service	$31,197.00	Build	Options

Bid Award

Contract: FSA26-EQU24.0, Equipment

Group: Forklift: Cushion Tire - 4,000 lbs. Capacity

Item: 134, Crown, CGC20SC-9, CGC20SC-9

Description: Refer FSA Base Specifications PDF document.

Model Upgrade/Downgrade:

Zone	Rank	Vendor	Price	Build File	Options File
Western	Primary	Federal Contracts LLC DBA Federal Contracts Company	$44,131.00	Build	Options
Northern	Primary	Federal Contracts LLC DBA Federal Contracts Company	$44,131.00	Build	Options
Central	Primary	Federal Contracts LLC DBA Federal Contracts Company	$44,131.00	Build	Options
Southern	Primary	Federal Contracts LLC DBA Federal Contracts Company	$44,131.00	Build	Options

Bid Award

Contract: FSA26-EQU24.0, Equipment

Group: Forklift: Cushion Tire - 4,000 lbs. Capacity

Item: 135, Hangcha, FP20C, CPYD20-XH31B1-C

Description: Refer FSA Base Specifications PDF document.

Model Upgrade/Downgrade:

Zone	Rank	Vendor	Price	Build File	Options File
Western	Primary	National Lift Truck Service	$25,950.00	Build	Options
Northern	Primary	National Lift Truck Service	$25,950.00	Build	Options
Central	Primary	National Lift Truck Service	$25,950.00	Build	Options
Southern	Primary	National Lift Truck Service	$25,950.00	Build	Options

Bid Award

Contract: FSA26-EQU24.0, Equipment

Group: Forklift: Cushion Tire - 4,000 lbs. Capacity

Item: 137, Hyster, S40A, S40A

Description: Refer FSA Base Specifications PDF document.

Model Upgrade/Downgrade:

Zone	Rank	Vendor	Price	Build File	Options File
Western	Primary	Federal Contracts LLC DBA Federal Contracts Company	$42,152.00	Build	Options
Northern	Primary	Federal Contracts LLC DBA Federal Contracts Company	$42,152.00	Build	Options
Central	Primary	Federal Contracts LLC DBA Federal Contracts Company	$42,152.00	Build	Options
Southern	Primary	Federal Contracts LLC DBA Federal Contracts Company	$42,152.00	Build	Options

Bid Award

Contract: FSA26-EQU24.0, Equipment

Group: Forklift: Cushion Tire - 4,000 lbs. Capacity

Item: 138, Hyundai, 25LC-9, 25LC-9

Description: Refer FSA Base Specifications PDF document.

Model Upgrade/Downgrade:

Zone	Rank	Vendor	Price	Build File	Options File
Western	Primary	National Lift Truck Service	$30,800.00	Build	Options
Northern	Primary	National Lift Truck Service	$30,800.00	Build	Options
Central	Primary	National Lift Truck Service	$30,800.00	Build	Options
Southern	Primary	National Lift Truck Service	$30,298.00	Build	Options

Bid Award

Contract: FSA26-EQU24.0, Equipment

Group: Forklift: Cushion Tire - 4,000 lbs. Capacity

Item: 139, LuigGong, CLG2020G-C, CLG2020G-C

Description: Refer FSA Base Specifications PDF document.

Model Upgrade/Downgrade:

Zone	Rank	Vendor	Price	Build File	Options File
Western	Primary	Love Power Equipment, Inc	$34,000.00	Build	Options
Northern	Primary	Love Power Equipment, Inc	$34,000.00	Build	Options
Central	Primary	Love Power Equipment, Inc	$32,200.00	Build	Options
Southern	Primary	Love Power Equipment, Inc	$34,500.00	Build	Options

Bid Award

Contract: FSA26-EQU24.0, Equipment

Group: Forklift: Cushion Tire - 4,000 lbs. Capacity

Item: 140, Mitsubishi, FGC20CN, FGC20CN

Description: Refer FSA Base Specifications PDF document.

Model Upgrade/Downgrade:

Zone	Rank	Vendor	Price	Build File	Options File
Western	Primary	Ring Power Corporation	$48,402.00	Build	Options
Northern	Primary	Ring Power Corporation	$48,402.00	Build	Options
Central	Primary	Ring Power Corporation	$48,402.00	Build	Options
Southern	Primary	Kelly Tractor Co	$33,470.00	Build	Options

Bid Award

Contract: FSA26-EQU24.0, Equipment

Group: Forklift: Cushion Tire - 4,000 lbs. Capacity

Item: 141, Toyota, 50-8FGCU20, 50-8FGCU20

Description: Refer FSA Base Specifications PDF document.

Model Upgrade/Downgrade:

Zone	Rank	Vendor	Price	Build File	Options File
Western	Primary	Southern States ToyotaLift	$33,939.00	Build	Options
Northern	Primary	Southern States ToyotaLift	$33,939.00	Build	Options
Central	Primary	Southern States ToyotaLift	$33,939.00	Build	Options
Southern	Primary	Southern States ToyotaLift	$33,939.00	Build	Options

Bid Award

Contract: FSA26-EQU24.0, Equipment

Group: Forklift: Rough Terrain Forklift - 5,000 lbs. Capacity

Item: 142, Case, 586H, 586H

Description: Refer FSA Base Specifications PDF document.

Model Upgrade/Downgrade:

Zone	Rank	Vendor	Price	Build File	Options File
Western	Primary	Innovative Equipment Services 2 LLC CASE Power & Equipment of Florida	$108,475.00	Build	Options
Northern	Primary	Innovative Equipment Services 2 LLC CASE Power & Equipment of Florida	$108,475.00	Build	Options
Central	Primary	Innovative Equipment Services 2 LLC CASE Power & Equipment of Florida	$108,475.00	Build	Options
Southern	Primary	Innovative Equipment Services 2 LLC CASE Power & Equipment of Florida	$108,475.00	Build	Options

Bid Award

Contract: FSA26-EQU24.0, Equipment

Group: Forklift: Rough Terrain Forklift - 5,000 lbs. Capacity

Item: 143, Hangcha, RT25, CPCD25-XW98C-RT4

Description: Refer FSA Base Specifications PDF document.

Model Upgrade/Downgrade:

Zone	Rank	Vendor	Price	Build File	Options File
Western	Primary	National Lift Truck Service	$50,836.00	Build	Options
Northern	Primary	National Lift Truck Service	$50,836.00	Build	Options
Central	Primary	National Lift Truck Service	$50,836.00	Build	Options
Southern	Primary	National Lift Truck Service	$50,335.00	Build	Options

Bid Award

Contract: FSA26-EQU24.0, Equipment

Group: Forklift: Rough Terrain Forklift - 5,000 lbs. Capacity

Item: 144, Harlo, HP5000, HP5000

Description: Refer FSA Base Specifications PDF document.

Model Upgrade/Downgrade:

Zone	Rank	Vendor	Price	Build File	Options File
Western	Primary	Dobbs Equipment, LLC	$122,465.00	Build	Options
Northern	Primary	Dobbs Equipment, LLC	$122,465.00	Build	Options
Central	Primary Alternate	Dobbs Equipment, LLC Kelly Tractor Co	$122,465.00 $124,500.00	Build Build	Options Options
Southern	Primary Alternate	Dobbs Equipment, LLC Kelly Tractor Co	$122,465.00 $124,500.00	Build Build	Options Options

Bid Award

Contract: FSA26-EQU24.0, Equipment

Group: Forklift: Rough Terrain Forklift - 5,000 lbs. Capacity

Item: 146, JLG, AUSA, C401H

Description: Refer FSA Base Specifications PDF document.

Model Upgrade/Downgrade:

Zone	Rank	Vendor	Price	Build File	Options File
Western	Primary	Everglades Equipment Group	$97,000.00	Build	Options
Northern	Primary	Everglades Equipment Group	$97,000.00	Build	Options
Central	Primary	Everglades Equipment Group	$97,000.00	Build	Options
Southern	Primary Alternate	Everglades Equipment Group Kelly Tractor Co	$97,000.00 $109,865.00	Build Build	Options Options

Bid Award

Contract: FSA26-EQU24.0, Equipment

Group: Forklift: Rough Terrain Forklift - 5,000 lbs. Capacity

Item: 147, Lift King, 6M42, 6M42

Description: Refer FSA Base Specifications PDF document.

Model Upgrade/Downgrade:

Zone	Rank	Vendor	Price	Build File	Options File
Western	Primary	Ring Power Corporation	$124,635.00	Build	Options
Northern	Primary	Ring Power Corporation	$124,635.00	Build	Options
Central	Primary	Ring Power Corporation	$124,635.00	Build	Options
Southern					

Bid Award

Contract: FSA26-EQU24.0, Equipment

Group: Forklift: Rough Terrain Forklift - 5,000 lbs. Capacity

Item: 149, Manitou, M30-4, M30-4

Description: Refer FSA Base Specifications PDF document.

Model Upgrade/Downgrade:

Zone	Rank	Vendor	Price	Build File	Options File
Western	Primary Alternate	Southern States ToyotaLift National Equipment Dealers, LLC	$60,700.00 $102,360.00	Build Build	Options Options
Northern	Primary Alternate	Southern States ToyotaLift National Equipment Dealers, LLC	$60,700.00 $102,360.00	Build Build	Options Options
Central	Primary Alternate	Southern States ToyotaLift National Equipment Dealers, LLC	$60,700.00 $102,360.00	Build Build	Options Options
Southern	Primary Alternate	Southern States ToyotaLift National Equipment Dealers, LLC	$60,700.00 $102,360.00	Build Build	Options Options

Bid Award

Contract: FSA26-EQU24.0, Equipment

Group: Forklift: Rough Terrain Forklift - 5,000 lbs. Capacity

Item: 150, Master Craft, MC Series, MC-5

Description: Refer FSA Base Specifications PDF document.

Model Upgrade/Downgrade:

Zone	Rank	Vendor	Price	Build File	Options File
Western					
Northern					
Central					
Southern	Primary	Kelly Tractor Co	$122,550.00	Build	Options

Bid Award

Contract: FSA26-EQU24.0, Equipment

Group: Forklift: Telescopic Tool Carrier/Telehandler

Item: 151, Bobcat, TL723, TL723

Description: Refer FSA Base Specifications PDF document.

Model Upgrade/Downgrade:

Zone	Rank	Vendor	Price	Build File	Options File
Western	Primary	Doosan Bobcat North America, Inc.	$117,992.00	Build	Options
Northern	Primary	Doosan Bobcat North America, Inc.	$117,992.00	Build	Options
Central	Primary	Doosan Bobcat North America, Inc.	$117,992.00	Build	Options
Southern	Primary	Doosan Bobcat North America, Inc.	$117,992.00	Build	Options

Bid Award

Contract: FSA26-EQU24.0, Equipment

Group: Forklift: Telescopic Tool Carrier/Telehandler

Item: 152, Caterpillar, TH0842, TH0842

Description: Refer FSA Base Specifications PDF document.

Model Upgrade/Downgrade:

Zone	Rank	Vendor	Price	Build File	Options File
Western	Primary	Ring Power Corporation	$177,056.00	Build	Options
Northern	Primary	Ring Power Corporation	$177,056.00	Build	Options
Central	Primary	Ring Power Corporation	$177,056.00	Build	Options
Southern	Primary	Kelly Tractor Co	$163,550.00	Build	Options

Bid Award

Contract: FSA26-EQU24.0, Equipment

Group: Forklift: Telescopic Tool Carrier/Telehandler

Item: 153, Genie, GTH-844, GTH-844

Description: Refer FSA Base Specifications PDF document.

Model Upgrade/Downgrade:

Zone	Rank	Vendor	Price	Build File	Options File
Western	Primary	National Lift Truck Service	$149,990.00	Build	Options
Northern	Primary	National Lift Truck Service	$149,990.00	Build	Options
Central	Primary	National Lift Truck Service	$149,990.00	Build	Options
Southern	Primary Alternate	National Lift Truck Service Kelly Tractor Co	$149,315.00 $165,200.00	Build Build	Options Options

Bid Award

Contract: FSA26-EQU24.0, Equipment

Group: Forklift: Telescopic Tool Carrier/Telehandler

Item: 154, JLG, 943, 943

Description: Refer FSA Base Specifications PDF document.

Model Upgrade/Downgrade:

Zone	Rank	Vendor	Price	Build File	Options File
Western	Primary	Everglades Equipment Group	$148,000.00	Build	Options
Northern	Primary	Everglades Equipment Group	$148,000.00	Build	Options
Central	Primary	Everglades Equipment Group	$148,000.00	Build	Options
Southern	Primary Alternate	Everglades Equipment Group Kelly Tractor Co	$148,000.00 $158,640.00	Build Build	Options Options

Bid Award

Contract: FSA26-EQU24.0, Equipment

Group: Forklift: Telescopic Tool Carrier/Telehandler

Item: 155, JLG, Skytrak, 10042

Description: Refer FSA Base Specifications PDF document.

Model Upgrade/Downgrade:

Zone	Rank	Vendor	Price	Build File	Options File
Western	Primary	Everglades Equipment Group	$158,500.00	Build	Options
Northern	Primary	Everglades Equipment Group	$158,500.00	Build	Options
Central	Primary	Everglades Equipment Group	$158,500.00	Build	Options
Southern	Primary	Everglades Equipment Group	$158,500.00	Build	Options

Bid Award

Contract: FSA26-EQU24.0, Equipment

Group: Forklift: Telescopic Tool Carrier/Telehandler

Item: 156, JLG, Rotating Telehandler, R1370

Description: Refer FSA Base Specifications PDF document.

Model Upgrade/Downgrade:

Zone	Rank	Vendor	Price	Build File	Options File
Western	Primary	Everglades Equipment Group	$336,400.00	Build	Options
Northern	Primary	Everglades Equipment Group	$336,400.00	Build	Options
Central	Primary	Everglades Equipment Group	$336,400.00	Build	Options
Southern	Primary Alternate	Everglades Equipment Group Kelly Tractor Co	$336,400.00 $369,420.00	Build Build	Options Options

Bid Award

Contract: FSA26-EQU24.0, Equipment

Group: Forklift: Telescopic Tool Carrier/Telehandler

Item: 157, Magni, Rotating Telehandler, RTH13.72

Description: Refer FSA Base Specifications PDF document.

Model Upgrade/Downgrade:

Zone	Rank	Vendor	Price	Build File	Options File
Western					
Northern					
Central	Primary	Kelly Tractor Co	$350,000.00	Build	Options
Southern	Primary	Kelly Tractor Co	$350,000.00	Build	Options

Bid Award

Contract: FSA26-EQU24.0, Equipment

Group: Forklift: Telescopic Tool Carrier/Telehandler

Item: 158, Manitou, MTA842, MTA842

Description: Refer FSA Base Specifications PDF document.

Model Upgrade/Downgrade:

Zone	Rank	Vendor	Price	Build File	Options File
Western	Primary	National Equipment Dealers, LLC	$171,530.00	Build	Options
Northern	Primary	National Equipment Dealers, LLC	$171,530.00	Build	Options
Central					
Southern	Primary	National Equipment Dealers, LLC	$171,530.00	Build	Options

Bid Award

Contract: FSA26-EQU24.0, Equipment

Group: Forklift: Telescopic Tool Carrier/Telehandler

Item: 160, Snorkel, SR9244, SR9244

Description: Refer FSA Base Specifications PDF document.

Model Upgrade/Downgrade:

Zone	Rank	Vendor	Price	Build File	Options File
Western	Primary	National Lift Truck Service	$165,500.00	Build	Options
Northern	Primary	National Lift Truck Service	$165,500.00	Build	Options
Central	Primary	National Lift Truck Service	$165,500.00	Build	Options
Southern	Primary	National Lift Truck Service	$165,500.00	Build	Options

Bid Award

Contract: FSA26-EQU24.0, Equipment

Group: Forklift: Telescopic Tool Carrier/Telehandler

Item: 161, Xtreme, XR843-B, XR843-B

Description: Refer FSA Base Specifications PDF document.

Model Upgrade/Downgrade:

Zone	Rank	Vendor	Price	Build File	Options File
Western	Primary	National Lift Truck Service	$185,675.00	Build	Options
Northern	Primary	National Lift Truck Service	$185,675.00	Build	Options
Central	Primary	National Lift Truck Service	$185,675.00	Build	Options
Southern	Primary	National Lift Truck Service	$183,990.00	Build	Options

Bid Award

Contract: FSA26-EQU24.0, Equipment

Group: Generator: 125kW Stationary

Item: 163, Blue Star Power Systems, JD125-02, JD125-02

Description: Refer FSA Base Specifications PDF document.

Model Upgrade/Downgrade:

Zone	Rank	Vendor	Price	Build File	Options File
Western	Primary	MID-FLORIDA DIESEL INC	$60,245.00	Build	Options
	Primary	MID-FLORIDA DIESEL INC	$60,245.00	Build	Options
Northern	Primary	MID-FLORIDA DIESEL INC	$60,245.00	Build	Options
	Primary	MID-FLORIDA DIESEL INC	$60,245.00	Build	Options
Central	Primary	MID-FLORIDA DIESEL INC	$60,245.00	Build	Options
	Primary	MID-FLORIDA DIESEL INC	$60,245.00	Build	Options
Southern	Primary	MID-FLORIDA DIESEL INC	$60,245.00	Build	Options
	Primary	MID-FLORIDA DIESEL INC	$60,245.00	Build	Options

Bid Award

Contract: FSA26-EQU24.0, Equipment

Group: Generator: 125kW Stationary

Item: 164, Caterpillar, D125, D125

Description: Refer FSA Base Specifications PDF document.

Model Upgrade/Downgrade:

Zone	Rank	Vendor	Price	Build File	Options File
Western	Primary	Ring Power Corporation	$77,820.00	Build	Options
Northern	Primary	Ring Power Corporation	$77,820.00	Build	Options
Central	Primary	Ring Power Corporation	$77,820.00	Build	Options
Southern	Primary	Pantropic Power	$75,463.00	Build	Options

Bid Award

Contract: FSA26-EQU24.0, Equipment

Group: Generator: 125kW Stationary

Item: 165, Generac, SD130, SD130

Description: Refer FSA Base Specifications PDF document.

Model Upgrade/Downgrade:

Zone	Rank	Vendor	Price	Build File	Options File
Western	Primary	ACF Industrial Energy	$54,400.00	Build	Options
Northern	Primary	ACF Industrial Energy	$54,400.00	Build	Options
Central	Primary	ACF Industrial Energy	$54,400.00	Build	Options
Southern					

Bid Award

Contract: FSA26-EQU24.0, Equipment

Group: Generator: 125kW Stationary

Item: 166, Gillette, SPJD-1550, SPJD-1550

Description: Refer FSA Base Specifications PDF document.

Model Upgrade/Downgrade:

Zone	Rank	Vendor	Price	Build File	Options File
Western	Primary	Emergency Standby Power, LLC	$52,892.00	Build	Options
Northern	Primary	Emergency Standby Power, LLC	$52,892.00	Build	Options
Central	Primary	Emergency Standby Power, LLC	$52,892.00	Build	Options
Southern	Primary	Emergency Standby Power, LLC	$52,892.00	Build	Options

Bid Award

Contract: FSA26-EQU24.0, Equipment

Group: Generator: 125kW Stationary

Item: 167, HiPower, HDI-130F, HDI-130F

Description: Refer FSA Base Specifications PDF document.

Model Upgrade/Downgrade:

Zone	Rank	Vendor	Price	Build File	Options File
Western	Primary	GenServe LLC	$58,381.00	Build	Options
Northern	Primary	GenServe LLC	$58,381.00	Build	Options
Central	Primary	GenServe LLC	$58,381.00	Build	Options
Southern	Primary	GenServe LLC	$58,381.00	Build	Options

Bid Award

Contract: FSA26-EQU24.0, Equipment

Group: Generator: 125kW Stationary

Item: 168, Olympian, OD125, OD125

Description: Refer FSA Base Specifications PDF document.

Model Upgrade/Downgrade:

Zone	Rank	Vendor	Price	Build File	Options File
Western	Primary	GenServe LLC	$44,463.00	Build	Options
Northern	Primary	GenServe LLC	$44,463.00	Build	Options
Central	Primary	GenServe LLC	$44,463.00	Build	Options
Southern	Primary	GenServe LLC	$44,463.00	Build	Options

Bid Award

Contract: FSA26-EQU24.0, Equipment

Group: Generator: 125kW Stationary

Item: 169, On Demand Power Systems, 125kW Standby, ODPSJD125-01

Description: Refer FSA Base Specifications PDF document.

Model Upgrade/Downgrade:

Zone	Rank	Vendor	Price	Build File	Options File
Western	Primary	MID-FLORIDA DIESEL INC	$74,902.00	Build	Options
Northern	Primary	MID-FLORIDA DIESEL INC	$74,902.00	Build	Options
Central	Primary	MID-FLORIDA DIESEL INC	$74,902.00	Build	Options
Southern	Primary	MID-FLORIDA DIESEL INC	$74,902.00	Build	Options

Bid Award

Contract: FSA26-EQU24.0, Equipment

Group: Generator: 125kW Stationary

Item: 171, Taylor Power Systems, TDS125, TDS125

Description: Refer FSA Base Specifications PDF document.

Model Upgrade/Downgrade:

Zone	Rank	Vendor	Price	Build File	Options File
Western	Primary	Taylor Power Systems, Inc.	$58,656.00	Build	Options
Northern	Primary	Taylor Power Systems, Inc.	$58,656.00	Build	Options
Central	Primary	Taylor Power Systems, Inc.	$58,656.00	Build	Options
Southern	Primary	Taylor Power Systems, Inc.	$58,656.00	Build	Options

Bid Award

Contract: FSA26-EQU24.0, Equipment

Group: Generator: 125kW Stationary

Item: 172, Tradewinds, T125, T125

Description: Refer FSA Base Specifications PDF document.

Model Upgrade/Downgrade:

Zone	Rank	Vendor	Price	Build File	Options File
Western	Primary	Tradewinds Power Corp.	$94,500.00	Build	Options
Northern	Primary	Tradewinds Power Corp.	$94,500.00	Build	Options
Central	Primary	Tradewinds Power Corp.	$94,500.00	Build	Options
Southern	Primary	Tradewinds Power Corp.	$94,500.00	Build	Options

Bid Award

Contract: FSA26-EQU24.0, Equipment

Group: Generator: 150kW Mobile

Item: 175, Blue Star Power Systems, VD150-02FT4MP, VD150-02FT4MP

Description: Refer FSA Base Specifications PDF document.

Model Upgrade/Downgrade:

Zone	Rank	Vendor	Price	Build File	Options File
Western	Primary	MID-FLORIDA DIESEL INC	$133,722.00	Build	Options
Northern	Primary	MID-FLORIDA DIESEL INC	$133,722.00	Build	Options
Central	Primary	MID-FLORIDA DIESEL INC	$133,722.00	Build	Options
Southern	Primary	MID-FLORIDA DIESEL INC	$133,722.00	Build	Options

Bid Award

Contract: FSA26-EQU24.0, Equipment

Group: Generator: 150kW Mobile

Item: 176, Bobcat, PG190WCU-3A-T4F, PG190WCU-3A-T4F

Description: Refer FSA Base Specifications PDF document.

Model Upgrade/Downgrade:

Zone	Rank	Vendor	Price	Build File	Options File
Western	Primary	Doosan Bobcat North America, Inc.	$123,525.00	Build	Options
Northern	Primary	Doosan Bobcat North America, Inc.	$123,525.00	Build	Options
Central	Primary	Doosan Bobcat North America, Inc.	$123,525.00	Build	Options
Southern	Primary	Doosan Bobcat North America, Inc.	$123,525.00	Build	Options

Bid Award

Contract: FSA26-EQU24.0, Equipment

Group: Generator: 150kW Mobile

Item: 177, Caterpillar, XQ230, XQ230

Description: Refer FSA Base Specifications PDF document.

Model Upgrade/Downgrade:

Zone	Rank	Vendor	Price	Build File	Options File
Western	Primary	Ring Power Corporation	$208,690.00	Build	Options
Northern	Primary	Ring Power Corporation	$208,690.00	Build	Options
Central	Primary	Ring Power Corporation	$208,690.00	Build	Options
Southern	Primary	Pantropic Power	$203,998.00	Build	Options

Bid Award

Contract: FSA26-EQU24.0, Equipment

Group: Generator: 150kW Mobile

Item: 178, Generac, MDG175DF4, MDG175DF4

Description: Refer FSA Base Specifications PDF document.

Model Upgrade/Downgrade:

Zone	Rank	Vendor	Price	Build File	Options File
Western	Primary	ACF Industrial Energy	$110,225.00	Build	Options
Northern	Primary	ACF Industrial Energy	$110,225.00	Build	Options
Central	Primary	ACF Industrial Energy	$110,225.00	Build	Options
Southern					

Bid Award

Contract: FSA26-EQU24.0, Equipment

Group: Generator: 150kW Mobile

Item: 179, HiPower, HRJW-190 T4F, HRJW-190 T4F

Description: Refer FSA Base Specifications PDF document.

Model Upgrade/Downgrade:

Zone	Rank	Vendor	Price	Build File	Options File
Western	Primary	GenServe LLC	$127,003.00	Build	Options
Northern	Primary	GenServe LLC	$127,003.00	Build	Options
Central	Primary	GenServe LLC	$127,003.00	Build	Options
Southern	Primary	GenServe LLC	$127,003.00	Build	Options

Bid Award

Contract: FSA26-EQU24.0, Equipment

Group: Generator: 150kW Mobile

Item: 180, MULTIQUIP, DCA180SSJU4F3, DCA180SSJU4F3

Description: Refer FSA Base Specifications PDF document.

Model Upgrade/Downgrade:

Zone	Rank	Vendor	Price	Build File	Options File
Western	Primary	Federal Contracts LLC DBA Federal Contracts Company	$158,704.00	Build	Options
Northern	Primary	Federal Contracts LLC DBA Federal Contracts Company	$158,704.00	Build	Options
Central	Primary	Federal Contracts LLC DBA Federal Contracts Company	$158,704.00	Build	Options
Southern	Primary	Federal Contracts LLC DBA Federal Contracts Company	$158,704.00	Build	Options

Bid Award

Contract: FSA26-EQU24.0, Equipment

Group: Generator: 150kW Mobile

Item: 181, On Demand Power Systems, 150 kW Mobile Generator, ODPSJD150M-01

Description: Refer FSA Base Specifications PDF document.

Model Upgrade/Downgrade:

Zone	Rank	Vendor	Price	Build File	Options File
Western	Primary	MID-FLORIDA DIESEL INC	$142,738.00	Build	Options
Northern	Primary	MID-FLORIDA DIESEL INC	$142,738.00	Build	Options
Central	Primary	MID-FLORIDA DIESEL INC	$142,738.00	Build	Options
Southern	Primary	MID-FLORIDA DIESEL INC	$142,738.00	Build	Options

Bid Award

Contract: FSA26-EQU24.0, Equipment

Group: Generator: 150kW Mobile

Item: 183, Taylor Power Systems, TM225, TM225

Description: Refer FSA Base Specifications PDF document.

Model Upgrade/Downgrade:

Zone	Rank	Vendor	Price	Build File	Options File
Western	Primary	Taylor Power Systems, Inc.	$135,000.00	Build	Options
Northern	Primary	Taylor Power Systems, Inc.	$135,000.00	Build	Options
Central	Primary	Taylor Power Systems, Inc.	$135,000.00	Build	Options
Southern	Primary	Taylor Power Systems, Inc.	$135,000.00	Build	Options

Bid Award

Contract: FSA26-EQU24.0, Equipment

Group: Generator: 150kW Mobile

Item: 184, Tradewinds, T150M, T150M

Description: Refer FSA Base Specifications PDF document.

Model Upgrade/Downgrade:

Zone	Rank	Vendor	Price	Build File	Options File
Western	Primary	Tradewinds Power Corp.	$186,000.00	Build	Options
Northern	Primary	Tradewinds Power Corp.	$186,000.00	Build	Options
Central	Primary	Tradewinds Power Corp.	$186,000.00	Build	Options
Southern	Primary	Tradewinds Power Corp.	$186,000.00	Build	Options

Bid Award

Contract: FSA26-EQU24.0, Equipment

Group: Generator: 500kW Mobile

Item: 189, Blue Star Power Systems, VD550-02FT4MP, VD550-02FT4MP

Description: Refer FSA Base Specifications PDF document.

Model Upgrade/Downgrade:

Zone	Rank	Vendor	Price	Build File	Options File
Western					
Northern	Primary	MID-FLORIDA DIESEL INC	$281,829.00	Build	Options
Central	Primary	MID-FLORIDA DIESEL INC	$281,829.00	Build	Options
Southern	Primary	MID-FLORIDA DIESEL INC	$281,829.00	Build	Options

Bid Award

Contract: FSA26-EQU24.0, Equipment

Group: Generator: 500kW Mobile

Item: 190, Caterpillar, XQ570, XQ570

Description: Refer FSA Base Specifications PDF document.

Model Upgrade/Downgrade:

Zone	Rank	Vendor	Price	Build File	Options File
Western	Primary	Ring Power Corporation	$558,890.00	Build	Options
Northern	Primary	Ring Power Corporation	$558,890.00	Build	Options
Central	Primary	Ring Power Corporation	$558,890.00	Build	Options
Southern	Primary	Pantropic Power	$507,234.00	Build	Options

Bid Award

Contract: FSA26-EQU24.0, Equipment

Group: Generator: 500kW Mobile

Item: 191, Generac, 570KVA, MDE570P

Description: Refer FSA Base Specifications PDF document.

Model Upgrade/Downgrade:

Zone	Rank	Vendor	Price	Build File	Options File
Western	Primary	ACF Industrial Energy	$245,000.00	Build	Options
Northern	Primary	ACF Industrial Energy	$245,000.00	Build	Options
Central	Primary	ACF Industrial Energy	$245,000.00	Build	Options
Southern					

Bid Award

Contract: FSA26-EQU24.0, Equipment

Group: Generator: 500kW Mobile

Item: 196, Tradewinds, T500M, T500M

Description: Refer FSA Base Specifications PDF document.

Model Upgrade/Downgrade:

Zone	Rank	Vendor	Price	Build File	Options File
Western	Primary	Tradewinds Power Corp.	$595,000.00	Build	Options
Northern	Primary	Tradewinds Power Corp.	$595,000.00	Build	Options
Central	Primary	Tradewinds Power Corp.	$595,000.00	Build	Options
Southern	Primary	Tradewinds Power Corp.	$595,000.00	Build	Options

Bid Award

Contract: FSA26-EQU24.0, Equipment

Group: Generator: 500kW Stationary

Item: 198, Blue Star Power Systems, VD500-01, VD500-01

Description: Refer FSA Base Specifications PDF document.

Model Upgrade/Downgrade:

Zone	Rank	Vendor	Price	Build File	Options File
Western	Primary	MID-FLORIDA DIESEL INC	$137,271.00	Build	Options
Northern	Primary	MID-FLORIDA DIESEL INC	$137,271.00	Build	Options
Central	Primary	MID-FLORIDA DIESEL INC	$137,271.00	Build	Options
Southern	Primary	MID-FLORIDA DIESEL INC	$137,271.00	Build	Options

Bid Award

Contract: FSA26-EQU24.0, Equipment

Group: Generator: 500kW Stationary

Item: 199, Caterpillar, C15, C15

Description: Refer FSA Base Specifications PDF document.

Model Upgrade/Downgrade:

Zone	Rank	Vendor	Price	Build File	Options File
Western	Primary	Ring Power Corporation	$216,820.00	Build	Options
Northern	Primary	Ring Power Corporation	$216,820.00	Build	Options
Central	Primary	Ring Power Corporation	$216,820.00	Build	Options
Southern	Primary	Pantropic Power	$212,568.00	Build	Options

Bid Award

Contract: FSA26-EQU24.0, Equipment

Group: Generator: 500kW Stationary

Item: 200, Generac, SD500, SD500

Description: Refer FSA Base Specifications PDF document.

Model Upgrade/Downgrade:

Zone	Rank	Vendor	Price	Build File	Options File
Western	Primary	ACF Industrial Energy	$135,600.00	Build	Options
Northern	Primary	ACF Industrial Energy	$135,600.00	Build	Options
Central	Primary	ACF Industrial Energy	$135,600.00	Build	Options
Southern					

Bid Award

Contract: FSA26-EQU24.0, Equipment

Group: Generator: 500kW Stationary

Item: 201, Gillette, SPVD-5000, SPVD-5000

Description: Refer FSA Base Specifications PDF document.

Model Upgrade/Downgrade:

Zone	Rank	Vendor	Price	Build File	Options File
Western	Primary	Emergency Standby Power, LLC	$129,237.00	Build	Options
Northern	Primary	Emergency Standby Power, LLC	$129,237.00	Build	Options
Central	Primary	Emergency Standby Power, LLC	$129,237.00	Build	Options
Southern	Primary	Emergency Standby Power, LLC	$129,237.00	Build	Options

Bid Award

Contract: FSA26-EQU24.0, Equipment

Group: Generator: 500kW Stationary

Item: 202, HiPower, HDI-515V, HDI-515V

Description: Refer FSA Base Specifications PDF document.

Model Upgrade/Downgrade:

Zone	Rank	Vendor	Price	Build File	Options File
Western	Primary	GenServe LLC	$142,572.00	Build	Options
Northern	Primary	GenServe LLC	$142,572.00	Build	Options
Central	Primary	GenServe LLC	$142,572.00	Build	Options
Southern	Primary	GenServe LLC	$142,572.00	Build	Options

Bid Award

Contract: FSA26-EQU24.0, Equipment

Group: Generator: 500kW Stationary

Item: 204, Taylor Power Systems, TD500, TD500

Description: Refer FSA Base Specifications PDF document.

Model Upgrade/Downgrade:

Zone	Rank	Vendor	Price	Build File	Options File
Western	Primary	Taylor Power Systems, Inc.	$125,450.00	Build	Options
Northern	Primary	Taylor Power Systems, Inc.	$125,450.00	Build	Options
Central	Primary	Taylor Power Systems, Inc.	$125,450.00	Build	Options
Southern	Primary	Taylor Power Systems, Inc.	$125,450.00	Build	Options

Bid Award

Contract: FSA26-EQU24.0, Equipment

Group: Generator: 500kW Stationary

Item: 205, Tradewinds, T500, T500

Description: Refer FSA Base Specifications PDF document.

Model Upgrade/Downgrade:

Zone	Rank	Vendor	Price	Build File	Options File
Western	Primary	Tradewinds Power Corp.	$184,500.00	Build	Options
Northern	Primary	Tradewinds Power Corp.	$184,500.00	Build	Options
Central	Primary	Tradewinds Power Corp.	$184,500.00	Build	Options
Southern	Primary	Tradewinds Power Corp.	$184,500.00	Build	Options

Bid Award

Contract: FSA26-EQU24.0, Equipment

Group: Generator: 60kW Stationary

Item: 207, Blue Star Power Systems, JD60-02, JD60-02

Description: Refer FSA Base Specifications PDF document.

Model Upgrade/Downgrade:

Zone	Rank	Vendor	Price	Build File	Options File
Western	Primary	MID-FLORIDA DIESEL INC	$42,266.00	Build	Options
Northern	Primary	MID-FLORIDA DIESEL INC	$42,266.00	Build	Options
Central	Primary	MID-FLORIDA DIESEL INC	$42,266.00	Build	Options
Southern	Primary	MID-FLORIDA DIESEL INC	$42,266.00	Build	Options

Bid Award

Contract: FSA26-EQU24.0, Equipment

Group: Generator: 60kW Stationary

Item: 208, Caterpillar, D60, D60

Description: Refer FSA Base Specifications PDF document.

Model Upgrade/Downgrade:

Zone	Rank	Vendor	Price	Build File	Options File
Western	Primary	Ring Power Corporation	$48,990.00	Build	Options
Northern	Primary	Ring Power Corporation	$48,990.00	Build	Options
Central	Primary	Ring Power Corporation	$48,990.00	Build	Options
Southern	Primary	Pantropic Power	$51,400.00	Build	Options

Bid Award

Contract: FSA26-EQU24.0, Equipment

Group: Generator: 60kW Stationary

Item: 209, Generac, SD060, SD060

Description: Refer FSA Base Specifications PDF document.

Model Upgrade/Downgrade:

Zone	Rank	Vendor	Price	Build File	Options File
Western	Primary	ACF Industrial Energy	$36,700.00	Build	Options
Northern	Primary	ACF Industrial Energy	$36,700.00	Build	Options
Central	Primary	ACF Industrial Energy	$36,700.00	Build	Options
Southern					

Bid Award

Contract: FSA26-EQU24.0, Equipment

Group: Generator: 60kW Stationary

Item: 210, Gillette, SPD-600, SPD-600

Description: Refer FSA Base Specifications PDF document.

Model Upgrade/Downgrade:

Zone	Rank	Vendor	Price	Build File	Options File
Western	Primary	Emergency Standby Power, LLC	$41,966.00	Build	Options
Northern	Primary	Emergency Standby Power, LLC	$41,966.00	Build	Options
Central	Primary	Emergency Standby Power, LLC	$41,966.00	Build	Options
Southern	Primary	Emergency Standby Power, LLC	$41,966.00	Build	Options

Bid Award

Contract: FSA26-EQU24.0, Equipment

Group: Generator: 60kW Stationary

Item: 211, Gillette, SPJD-600, SPJD-600

Description: Refer FSA Base Specifications PDF document.

Model Upgrade/Downgrade:

Zone	Rank	Vendor	Price	Build File	Options File
Western	Primary	Emergency Standby Power, LLC	$37,932.00	Build	Options
Northern	Primary	Emergency Standby Power, LLC	$37,932.00	Build	Options
Central	Primary	Emergency Standby Power, LLC	$37,932.00	Build	Options
Southern	Primary	Emergency Standby Power, LLC	$37,932.00	Build	Options

Bid Award

Contract: FSA26-EQU24.0, Equipment

Group: Generator: 60kW Stationary

Item: 212, HiPower, HDI-60F, HDI-60F

Description: Refer FSA Base Specifications PDF document.

Model Upgrade/Downgrade:

Zone	Rank	Vendor	Price	Build File	Options File
Western	Primary	GenServe LLC	$47,341.00	Build	Options
Northern	Primary	GenServe LLC	$47,341.00	Build	Options
Central	Primary	GenServe LLC	$47,341.00	Build	Options
Southern	Primary	GenServe LLC	$47,341.00	Build	Options

Bid Award

Contract: FSA26-EQU24.0, Equipment

Group: Generator: 60kW Stationary

Item: 213, Olympian, OD60, OD60

Description: Refer FSA Base Specifications PDF document.

Model Upgrade/Downgrade:

Zone	Rank	Vendor	Price	Build File	Options File
Western	Primary	GenServe LLC	$34,853.00	Build	Options
Northern	Primary	GenServe LLC	$34,853.00	Build	Options
Central	Primary	GenServe LLC	$34,853.00	Build	Options
Southern	Primary	GenServe LLC	$34,853.00	Build	Options

Bid Award

Contract: FSA26-EQU24.0, Equipment

Group: Generator: 60kW Stationary

Item: 214, On Demand Power Systems, 60kW Standby, ODPSJD60-01

Description: Refer FSA Base Specifications PDF document.

Model Upgrade/Downgrade:

Zone	Rank	Vendor	Price	Build File	Options File
Western	Primary	MID-FLORIDA DIESEL INC	$56,221.00	Build	Options
Northern	Primary	MID-FLORIDA DIESEL INC	$56,221.00	Build	Options
Central	Primary	MID-FLORIDA DIESEL INC	$56,221.00	Build	Options
Southern	Primary	MID-FLORIDA DIESEL INC	$56,221.00	Build	Options

Bid Award

Contract: FSA26-EQU24.0, Equipment

Group: Generator: 60kW Stationary

Item: 216, Taylor Power Systems, TDS60, TDS60

Description: Refer FSA Base Specifications PDF document.

Model Upgrade/Downgrade:

Zone	Rank	Vendor	Price	Build File	Options File
Western	Primary	Taylor Power Systems, Inc.	$42,750.00	Build	Options
Northern	Primary	Taylor Power Systems, Inc.	$42,750.00	Build	Options
Central	Primary	Taylor Power Systems, Inc.	$42,750.00	Build	Options
Southern	Primary	Taylor Power Systems, Inc.	$42,750.00	Build	Options

Bid Award

Contract: FSA26-EQU24.0, Equipment

Group: Generator: 60kW Stationary

Item: 217, Tradewinds, T60, T60

Description: Refer FSA Base Specifications PDF document.

Model Upgrade/Downgrade:

Zone	Rank	Vendor	Price	Build File	Options File
Western	Primary	Tradewinds Power Corp.	$63,000.00	Build	Options
Northern	Primary	Tradewinds Power Corp.	$63,000.00	Build	Options
Central	Primary	Tradewinds Power Corp.	$63,000.00	Build	Options
Southern	Primary	Tradewinds Power Corp.	$63,000.00	Build	Options

Bid Award

Contract: FSA26-EQU24.0, Equipment

Group: Horizontal Directional Drill

Item: 218, Vermeer, D24X40 S3, D24X40 S3

Description: Refer FSA Base Specifications PDF document.

Model Upgrade/Downgrade:

Zone	Rank	Vendor	Price	Build File	Options File
Western	Primary	Vermeer Southeast Sales	$439,230.00	Build	Options
Northern	Primary	Vermeer Southeast Sales	$439,230.00	Build	Options
Central	Primary	Vermeer Southeast Sales	$439,230.00	Build	Options
Southern	Primary	Vermeer Southeast Sales	$439,230.00	Build	Options

Bid Award

Contract: FSA26-EQU24.0, Equipment

Group: Leaf Collector: Trailer Mounted

Item: 220, ODB, DCL800TM, DCL800TM

Description: Refer FSA Base Specifications PDF document.

Model Upgrade/Downgrade:

Zone	Rank	Vendor	Price	Build File	Options File
Western	Primary	Environmental Products Group	$179,532.00	Build	Options
Northern	Primary	Environmental Products Group	$179,532.00	Build	Options
Central	Primary	Environmental Products Group	$179,532.00	Build	Options
Southern	Primary	Environmental Products Group	$179,532.00	Build	Options

Bid Award

Contract: FSA26-EQU24.0, Equipment

Group: Lift: Articulated Boom Lift - Self Propelled Tracked

Item: 221, CTE, Traccess, 170/56

Description: Refer FSA Base Specifications PDF document.

Model Upgrade/Downgrade:

Zone	Rank	Vendor	Price	Build File	Options File
Western	Primary	Vermeer Southeast Sales	$95,760.00	Build	Options
Northern	Primary	Vermeer Southeast Sales	$95,760.00	Build	Options
Central	Primary	Vermeer Southeast Sales	$95,760.00	Build	Options
Southern	Primary	Vermeer Southeast Sales	$95,760.00	Build	Options

Bid Award

Contract: FSA26-EQU24.0, Equipment

Group: Lift: Articulated Boom Lift - Self Propelled Tracked

Item: 655, JLG, X500AJ, X500AJ

Description: Refer FSA Base Specifications PDF document.

Model Upgrade/Downgrade:

Zone	Rank	Vendor	Price	Build File	Options File
Western	Primary	Kelly Tractor Co	$151,190.00	Build	Options
Northern	Primary	Kelly Tractor Co	$151,190.00	Build	Options
Central	Primary	Kelly Tractor Co	$151,190.00	Build	Options
Southern	Primary	Kelly Tractor Co	$151,190.00	Build	Options

Bid Award

Contract: FSA26-EQU24.0, Equipment

Group: Lift: Scissor Lift - Self Propelled

Item: 222, Genie, GS-1932, GS-1932

Description: Refer FSA Base Specifications PDF document.

Model Upgrade/Downgrade:

Zone	Rank	Vendor	Price	Build File	Options File
Western	Primary	National Lift Truck Service	$16,488.00	Build	Options
	Alternate	Ring Power Corporation	$18,165.00	Build	Options
Northern	Primary	National Lift Truck Service	$16,488.00	Build	Options
	Alternate	Ring Power Corporation	$18,165.00	Build	Options
Central	Primary	National Lift Truck Service	$16,488.00	Build	Options
	Alternate	Ring Power Corporation	$18,165.00	Build	Options
Southern	Primary	Kelly Tractor Co	$15,950.00	Build	Options
	Alternate	National Lift Truck Service	$16,135.00	Build	Options

Bid Award

Contract: FSA26-EQU24.0, Equipment

Group: Lift: Scissor Lift - Self Propelled

Item: 223, Haulotte, Optimum 1931 AC, Optimum 1931 AC

Description: Refer FSA Base Specifications PDF document.

Model Upgrade/Downgrade:

Zone	Rank	Vendor	Price	Build File	Options File
Western	Primary	Love Power Equipment, Inc	$16,200.00	Build	Options
Northern	Primary	Love Power Equipment, Inc	$15,912.00	Build	Options
Central	Primary	Love Power Equipment, Inc	$15,912.00	Build	Options
Southern	Primary	Love Power Equipment, Inc	$16,200.00	Build	Options

Bid Award

Contract: FSA26-EQU24.0, Equipment

Group: Lift: Scissor Lift - Self Propelled

Item: 224, JLG, JLG ES1932, JLG ES1932

Description: Refer FSA Base Specifications PDF document.

Model Upgrade/Downgrade:

Zone	Rank	Vendor	Price	Build File	Options File
Western	Primary	Everglades Equipment Group	$16,200.00	Build	Options
Northern	Primary	Everglades Equipment Group	$16,200.00	Build	Options
Central	Primary	Everglades Equipment Group	$16,200.00	Build	Options
Southern	Primary Alternate	Everglades Equipment Group Kelly Tractor Co	$16,200.00 $19,300.00	Build Build	Options Options

Bid Award

Contract: FSA26-EQU24.0, Equipment

Group: Lift: Scissor Lift - Self Propelled

Item: 225, Snorkel, S3219 PLUS, S3219 PLUS

Description: Refer FSA Base Specifications PDF document.

Model Upgrade/Downgrade:

Zone	Rank	Vendor	Price	Build File	Options File
Western	Primary	National Lift Truck Service	$14,750.00	Build	Options
Northern	Primary	National Lift Truck Service	$14,750.00	Build	Options
Central	Primary	National Lift Truck Service	$14,750.00	Build	Options
Southern	Primary	National Lift Truck Service	$14,250.00	Build	Options

Bid Award

Contract: FSA26-EQU24.0, Equipment

Group: Light Tower: Hybrid Light Tower

Item: 226, Signal Power, HT444PC, HT444PC

Description: Refer FSA Base Specifications PDF document.

Model Upgrade/Downgrade:

Zone	Rank	Vendor	Price	Build File	Options File
Western	Primary	Federal Contracts LLC DBA Federal Contracts Company	$45,254.00	Build	Options
Northern	Primary	Federal Contracts LLC DBA Federal Contracts Company	$45,254.00	Build	Options
Central	Primary	Federal Contracts LLC DBA Federal Contracts Company	$45,254.00	Build	Options
Southern	Primary	Federal Contracts LLC DBA Federal Contracts Company	$45,254.00	Build	Options

Bid Award

Contract: FSA26-EQU24.0, Equipment

Group: Light Tower: Light Tower - Trailer Mounted

Item: 228, Bobcat, PL65WKUB-60HZ-T4F, PL65WKUB-60HZ-T4F

Description: Refer FSA Base Specifications PDF document.

Model Upgrade/Downgrade:

Zone	Rank	Vendor	Price	Build File	Options File
Western	Primary	Doosan Bobcat North America, Inc.	$12,196.00	Build	Options
Northern	Primary	Doosan Bobcat North America, Inc.	$12,196.00	Build	Options
Central	Primary	Doosan Bobcat North America, Inc.	$12,196.00	Build	Options
Southern	Primary	Doosan Bobcat North America, Inc.	$12,196.00	Build	Options

Bid Award

Contract: FSA26-EQU24.0, Equipment

Group: Light Tower: Light Tower - Trailer Mounted

Item: 229, Generac, MLT4060, MLT4060

Description: Refer FSA Base Specifications PDF document.

Model Upgrade/Downgrade:

Zone	Rank	Vendor	Price	Build File	Options File
Western	Primary	ACF Industrial Energy	$16,850.00	Build	Options
Northern	Primary	ACF Industrial Energy	$16,850.00	Build	Options
Central	Primary	ACF Industrial Energy	$16,850.00	Build	Options
Southern					

Bid Award

Contract: FSA26-EQU24.0, Equipment

Group: Light Tower: Light Tower - Trailer Mounted

Item: 230, Wacker Neuson, LTT6, LTT6

Description: Refer FSA Base Specifications PDF document.

Model Upgrade/Downgrade:

Zone	Rank	Vendor	Price	Build File	Options File
Western	Primary	Kelly Tractor Co	$13,800.00	Build	Options
Northern	Primary	Kelly Tractor Co	$13,800.00	Build	Options
Central	Primary	Kelly Tractor Co	$13,400.00	Build	Options
Southern	Primary	Kelly Tractor Co	$13,400.00	Build	Options

Bid Award

Contract: FSA26-EQU24.0, Equipment

Group: Light Tower: Light Tower - Trailer Mounted

Item: 231, Wanco, WLT-4MK6K, WLT-4MK6K

Description: Refer FSA Base Specifications PDF document.

Model Upgrade/Downgrade:

Zone	Rank	Vendor	Price	Build File	Options File
Western	Primary	Tradewinds Power Corp.	$13,970.00	Build	Options
	Alternate	Aramsco Inc	$14,475.00	Build	Options
	Alternate	Jet-Vac Equipment Company, LLC	$18,099.00	Build	Options
Northern	Primary	Tradewinds Power Corp.	$13,970.00	Build	Options
	Alternate	Aramsco Inc	$14,475.00	Build	Options
	Alternate	Jet-Vac Equipment Company, LLC	$18,099.00	Build	Options
Central	Primary	Tradewinds Power Corp.	$13,970.00	Build	Options
	Alternate	Aramsco Inc	$14,475.00	Build	Options
	Alternate	Jet-Vac Equipment Company, LLC	$18,099.00	Build	Options
Southern	Primary	Tradewinds Power Corp.	$13,970.00	Build	Options
	Alternate	Aramsco Inc	$14,475.00	Build	Options
	Alternate	Jet-Vac Equipment Company, LLC	$18,099.00	Build	Options

Bid Award

Contract: FSA26-EQU24.0, Equipment

Group: Loader: Loader Backhoe - 4x4

Item: 232, Case, 580SN, 580SN

Description: Refer FSA Base Specifications PDF document.

Model Upgrade/Downgrade:

Zone	Rank	Vendor	Price	Build File	Options File
Western	Primary	Innovative Equipment Services 2 LLC CASE Power & Equipment of Florida	$141,000.00	Build	Options
Northern	Primary	Innovative Equipment Services 2 LLC CASE Power & Equipment of Florida	$141,000.00	Build	Options
Central	Primary	Innovative Equipment Services 2 LLC CASE Power & Equipment of Florida	$141,000.00	Build	Options
Southern	Primary	Innovative Equipment Services 2 LLC CASE Power & Equipment of Florida	$141,000.00	Build	Options

Bid Award

Contract: FSA26-EQU24.0, Equipment

Group: Loader: Loader Backhoe - 4x4

Item: 233, Caterpillar, 416, 416

Description: Refer FSA Base Specifications PDF document.

Model Upgrade/Downgrade:

Zone	Rank	Vendor	Price	Build File	Options File
Western	Primary	Ring Power Corporation	$120,106.00	Build	Options
Northern	Primary	Ring Power Corporation	$120,106.00	Build	Options
Central	Primary	Ring Power Corporation	$120,106.00	Build	Options
Southern	Primary	Kelly Tractor Co	$112,630.00	Build	Options

Bid Award

Contract: FSA26-EQU24.0, Equipment

Group: Loader: Loader Backhoe - 4x4

Item: 234, John Deere, 310P, 310P

Description: Refer FSA Base Specifications PDF document.

Model Upgrade/Downgrade:

Zone	Rank	Vendor	Price	Build File	Options File
Western	Primary	Dobbs Equipment, LLC	$120,715.00	Build	Options
Northern	Primary	Dobbs Equipment, LLC	$120,715.00	Build	Options
Central	Primary	Dobbs Equipment, LLC	$118,105.00	Build	Options
Southern	Primary	Dobbs Equipment, LLC	$118,105.00	Build	Options

Bid Award

Contract: FSA26-EQU24.0, Equipment

Group: Loader: Loader Backhoe - 4x4

Item: 235, New Holland, Loader Backhoe, B95D

Description: Refer FSA Base Specifications PDF document.

Model Upgrade/Downgrade:

Zone	Rank	Vendor	Price	Build File	Options File
Western	Primary	Love Power Equipment, Inc	$108,500.00	Build	Options
Northern	Primary	Love Power Equipment, Inc	$107,000.00	Build	Options
Central	Primary	Love Power Equipment, Inc	$107,000.00	Build	Options
Southern	Primary	Love Power Equipment, Inc	$108,500.00	Build	Options

Bid Award

Contract: FSA26-EQU24.0, Equipment

Group: Loader: Mini Skid Steer - 1,000 lbs. Operating Capacity - Tracked Type, Stand Up Operator

Item: 237, Kubota, Stand On Track Loader, SCL1000

Description: Refer FSA Base Specifications PDF document.

Model Upgrade/Downgrade:

Zone	Rank	Vendor	Price	Build File	Options File
Western	Primary	Creel Tractor Company	$34,248.00	Build	Options
Northern	Primary Alternate	Florida Coast Equipment, Inc. Creel Tractor Company	$33,387.00 $33,948.00	Build Build	Options Options
Central	Primary Alternate	Florida Coast Equipment, Inc. Creel Tractor Company	$33,387.00 $33,648.00	Build Build	Options Options
Southern	Primary Alternate	Creel Tractor Company Florida Coast Equipment, Inc.	$33,348.00 $33,387.00	Build Build	Options Options

Bid Award

Contract: FSA26-EQU24.0, Equipment

Group: Loader: Mini Skid Steer - 1,000 lbs. Operating Capacity - Tracked Type, Stand Up Operator

Item: 238, Scag, Jackal, SJ1125-N-34-25KBD

Description: Refer FSA Base Specifications PDF document.

Model Upgrade/Downgrade:

Zone	Rank	Vendor	Price	Build File	Options File
Western	Primary	Green Thumb Palm Beach	$34,887.00	Build	Options
Northern	Primary	Green Thumb Palm Beach	$34,887.00	Build	Options
Central	Primary	Green Thumb Palm Beach	$34,887.00	Build	Options
Southern	Primary	Green Thumb Palm Beach	$34,887.00	Build	Options

Bid Award

Contract: FSA26-EQU24.0, Equipment

Group: Loader: Mini Skid Steer - 1,000 lbs. Operating Capacity - Tracked Type, Stand Up Operator

Item: 239, Vermeer, Mini Skid Steer, ML150

Description: Refer FSA Base Specifications PDF document.

Model Upgrade/Downgrade:

Zone	Rank	Vendor	Price	Build File	Options File
Western	Primary	Vermeer Southeast Sales	$60,603.00	Build	Options
Northern	Primary	Vermeer Southeast Sales	$60,603.00	Build	Options
Central	Primary	Vermeer Southeast Sales	$60,603.00	Build	Options
Southern	Primary	Vermeer Southeast Sales	$60,603.00	Build	Options

Bid Award

Contract: FSA26-EQU24.0, Equipment

Group: Loader: Mini Skid Steer - 1,000 lbs. Operating Capacity - Tracked Type, Stand Up Operator

Item: 656, Wacker Neuson, Utility Track Loader, SM100

Description: Refer FSA Base Specifications PDF document.

Model Upgrade/Downgrade:

Zone	Rank	Vendor	Price	Build File	Options File
Western					
Northern					
Central	Primary	Kelly Tractor Co	$46,225.00	Build	Options
Southern	Primary	Kelly Tractor Co	$46,225.00	Build	Options

Bid Award

Contract: FSA26-EQU24.0, Equipment

Group: Loader: Skid Steer - 1,850 lbs. Operating Capacity - Wheeled Type

Item: 240, Bobcat, S590, S590

Description: Refer FSA Base Specifications PDF document.

Model Upgrade/Downgrade:

Zone	Rank	Vendor	Price	Build File	Options File
Western	Primary	Doosan Bobcat North America, Inc.	$41,154.00	Build	Options
Northern	Primary	Doosan Bobcat North America, Inc.	$41,154.00	Build	Options
Central	Primary	Doosan Bobcat North America, Inc.	$41,154.00	Build	Options
Southern	Primary	Doosan Bobcat North America, Inc.	$41,154.00	Build	Options

Bid Award

Contract: FSA26-EQU24.0, Equipment

Group: Loader: Skid Steer - 1,850 lbs. Operating Capacity - Wheeled Type

Item: 241, Case, SV185B, SV185B

Description: Refer FSA Base Specifications PDF document.

Model Upgrade/Downgrade:

Zone	Rank	Vendor	Price	Build File	Options File
Western	Primary	Innovative Equipment Services 2 LLC CASE Power & Equipment of Florida	$57,134.00	Build	Options
Northern	Primary	Innovative Equipment Services 2 LLC CASE Power & Equipment of Florida	$57,134.00	Build	Options
Central	Primary	Innovative Equipment Services 2 LLC CASE Power & Equipment of Florida	$57,134.00	Build	Options
Southern	Primary	Innovative Equipment Services 2 LLC CASE Power & Equipment of Florida	$57,134.00	Build	Options

Bid Award

Contract: FSA26-EQU24.0, Equipment

Group: Loader: Skid Steer - 1,850 lbs. Operating Capacity - Wheeled Type

Item: 242, Caterpillar, 236D3, 236D3

Description: Refer FSA Base Specifications PDF document.

Model Upgrade/Downgrade:

Zone	Rank	Vendor	Price	Build File	Options File
Western	Primary	Ring Power Corporation	$54,428.00	Build	Options
Northern	Primary	Ring Power Corporation	$54,428.00	Build	Options
Central	Primary	Ring Power Corporation	$54,428.00	Build	Options
Southern	Primary	Kelly Tractor Co	$51,875.00	Build	Options

Bid Award

Contract: FSA26-EQU24.0, Equipment

Group: Loader: Skid Steer - 1,850 lbs. Operating Capacity - Wheeled Type

Item: 244, John Deere, 318P, 318P

Description: Refer FSA Base Specifications PDF document.

Model Upgrade/Downgrade:

Zone	Rank	Vendor	Price	Build File	Options File
Western	Primary	Everglades Equipment Group	$45,525.00	Build	Options
	Alternate	Dobbs Equipment, LLC	$53,295.00	Build	Options
Northern	Primary	Everglades Equipment Group	$45,525.00	Build	Options
	Alternate	Dobbs Equipment, LLC	$53,295.00	Build	Options
Central	Primary	Everglades Equipment Group	$45,525.00	Build	Options
	Alternate	Dobbs Equipment, LLC	$52,125.00	Build	Options
Southern	Primary	Everglades Equipment Group	$45,525.00	Build	Options
	Alternate	Dobbs Equipment, LLC	$52,125.00	Build	Options

Bid Award

Contract: FSA26-EQU24.0, Equipment

Group: Loader: Skid Steer - 1,850 lbs. Operating Capacity - Wheeled Type

Item: 245, Kubota, SSV65, SSV65

Description: Refer FSA Base Specifications PDF document.

Model Upgrade/Downgrade:

Zone	Rank	Vendor	Price	Build File	Options File
Western	Primary	Creel Tractor Company	$39,935.00	Build	Options
Northern	Primary Alternate	Creel Tractor Company Florida Coast Equipment, Inc.	$39,735.00 $40,598.00	Build Build	Options Options
Central	Primary Alternate	Creel Tractor Company Florida Coast Equipment, Inc.	$39,185.00 $40,598.00	Build Build	Options Options
Southern	Primary Alternate	Creel Tractor Company Florida Coast Equipment, Inc.	$38,460.00 $40,598.00	Build Build	Options Options

Bid Award

Contract: FSA26-EQU24.0, Equipment

Group: Loader: Skid Steer - 1,850 lbs. Operating Capacity - Wheeled Type

Item: 246, New Holland, Skid Steer Loader, L320

Description: Refer FSA Base Specifications PDF document.

Model Upgrade/Downgrade:

Zone	Rank	Vendor	Price	Build File	Options File
Western	Primary	Love Power Equipment, Inc	$54,140.00	Build	Options
Northern	Primary	Love Power Equipment, Inc	$53,140.00	Build	Options
Central	Primary	Love Power Equipment, Inc	$53,140.00	Build	Options
Southern	Primary	Love Power Equipment, Inc	$54,140.00	Build	Options

Bid Award

Contract: FSA26-EQU24.0, Equipment

Group: Loader: Skid Steer - 1,850 lbs. Operating Capacity - Wheeled Type

Item: 247, New Holland, Small Articulated Loader, ML12

Description: Refer FSA Base Specifications PDF document.

Model Upgrade/Downgrade:

Zone	Rank	Vendor	Price	Build File	Options File
Western	Primary	Love Power Equipment, Inc	$48,900.00	Build	Options
Northern	Primary	Love Power Equipment, Inc	$47,900.00	Build	Options
Central	Primary	Love Power Equipment, Inc	$47,900.00	Build	Options
Southern	Primary	Love Power Equipment, Inc	$48,900.00	Build	Options

Bid Award

Contract: FSA26-EQU24.0, Equipment

Group: Loader: Skid Steer - 2,800 lbs. Operating Capacity - Wheeled Type

Item: 248, Case, SV340B, SV340B

Description: Refer FSA Base Specifications PDF document.

Model Upgrade/Downgrade:

Zone	Rank	Vendor	Price	Build File	Options File
Western	Primary	Innovative Equipment Services 2 LLC CASE Power & Equipment of Florida	$75,333.00	Build	Options
Northern	Primary	Innovative Equipment Services 2 LLC CASE Power & Equipment of Florida	$75,333.00	Build	Options
Central	Primary	Innovative Equipment Services 2 LLC CASE Power & Equipment of Florida	$75,333.00	Build	Options
Southern	Primary	Innovative Equipment Services 2 LLC CASE Power & Equipment of Florida	$75,333.00	Build	Options

Bid Award

Contract: FSA26-EQU24.0, Equipment

Group: Loader: Skid Steer - 2,800 lbs. Operating Capacity - Wheeled Type

Item: 249, Caterpillar, 270, 270

Description: Refer FSA Base Specifications PDF document.

Model Upgrade/Downgrade:

Zone	Rank	Vendor	Price	Build File	Options File
Western	Primary	Ring Power Corporation	$76,137.00	Build	Options
Northern	Primary	Ring Power Corporation	$76,137.00	Build	Options
Central	Primary	Ring Power Corporation	$76,137.00	Build	Options
Southern	Primary	Kelly Tractor Co	$70,990.00	Build	Options

Bid Award

Contract: FSA26-EQU24.0, Equipment

Group: Loader: Skid Steer - 2,800 lbs. Operating Capacity - Wheeled Type

Item: 250, John Deere, 330P, 330P

Description: Refer FSA Base Specifications PDF document.

Model Upgrade/Downgrade:

Zone	Rank	Vendor	Price	Build File	Options File
Western	Primary Alternate	Everglades Equipment Group Dobbs Equipment, LLC	$59,025.00 $64,685.00	Build Build	Options Options
Northern	Primary Alternate	Everglades Equipment Group Dobbs Equipment, LLC	$59,025.00 $64,685.00	Build Build	Options Options
Central	Primary Alternate	Everglades Equipment Group Dobbs Equipment, LLC	$59,025.00 $63,225.00	Build Build	Options Options
Southern	Primary Alternate	Everglades Equipment Group Dobbs Equipment, LLC	$59,025.00 $63,225.00	Build Build	Options Options

Bid Award

Contract: FSA26-EQU24.0, Equipment

Group: Loader: Skid Steer - 2,800 lbs. Operating Capacity - Wheeled Type

Item: 252, New Holland, Skid Steer Loader, L334

Description: Refer FSA Base Specifications PDF document.

Model Upgrade/Downgrade:

Zone	Rank	Vendor	Price	Build File	Options File
Western	Primary	Love Power Equipment, Inc	$75,700.00	Build	Options
Northern	Primary	Love Power Equipment, Inc	$74,700.00	Build	Options
Central	Primary	Love Power Equipment, Inc	$74,700.00	Build	Options
Southern	Primary	Love Power Equipment, Inc	$75,700.00	Build	Options

Bid Award

Contract: FSA26-EQU24.0, Equipment

Group: Loader: Skid Steer - 3,100 lbs. Operating Capacity - Tracked Type

Item: 253, ASV, VT-100, VT-100

Description: Refer FSA Base Specifications PDF document.

Model Upgrade/Downgrade:

Zone	Rank	Vendor	Price	Build File	Options File
Western	Primary	National Equipment Dealers, LLC	$119,500.00	Build	Options
Northern	Primary	National Equipment Dealers, LLC	$119,500.00	Build	Options
Central	Primary	National Equipment Dealers, LLC	$119,500.00	Build	Options
Southern	Primary	National Equipment Dealers, LLC	$119,500.00	Build	Options

Bid Award

Contract: FSA26-EQU24.0, Equipment

Group: Loader: Skid Steer - 3,100 lbs. Operating Capacity - Tracked Type

Item: 255, Bobcat, T770, T770

Description: Refer FSA Base Specifications PDF document.

Model Upgrade/Downgrade:

Zone	Rank	Vendor	Price	Build File	Options File
Western	Primary	Doosan Bobcat North America, Inc.	$67,843.00	Build	Options
Northern	Primary	Doosan Bobcat North America, Inc.	$67,843.00	Build	Options
Central	Primary	Doosan Bobcat North America, Inc.	$67,843.00	Build	Options
Southern	Primary	Doosan Bobcat North America, Inc.	$67,843.00	Build	Options

Bid Award

Contract: FSA26-EQU24.0, Equipment

Group: Loader: Skid Steer - 3,100 lbs. Operating Capacity - Tracked Type

Item: 256, Case, TR310B, TR310B

Description: Refer FSA Base Specifications PDF document.

Model Upgrade/Downgrade:

Zone	Rank	Vendor	Price	Build File	Options File
Western	Primary	Innovative Equipment Services 2 LLC CASE Power & Equipment of Florida	$77,942.00	Build	Options
Northern	Primary	Innovative Equipment Services 2 LLC CASE Power & Equipment of Florida	$77,942.00	Build	Options
Central	Primary	Innovative Equipment Services 2 LLC CASE Power & Equipment of Florida	$77,942.00	Build	Options
Southern	Primary	Innovative Equipment Services 2 LLC CASE Power & Equipment of Florida	$77,942.00	Build	Options

Bid Award

Contract: FSA26-EQU24.0, Equipment

Group: Loader: Skid Steer - 3,100 lbs. Operating Capacity - Tracked Type

Item: 257, Caterpillar, 265, 265

Description: Refer FSA Base Specifications PDF document.

Model Upgrade/Downgrade:

Zone	Rank	Vendor	Price	Build File	Options File
Western	Primary	Ring Power Corporation	$88,266.00	Build	Options
Northern	Primary	Ring Power Corporation	$88,266.00	Build	Options
Central	Primary	Ring Power Corporation	$88,266.00	Build	Options
Southern	Primary	Kelly Tractor Co	$84,580.00	Build	Options

Bid Award

Contract: FSA26-EQU24.0, Equipment

Group: Loader: Skid Steer - 3,100 lbs. Operating Capacity - Tracked Type

Item: 258, DEVELON, DTL35, DTL35

Description: Refer FSA Base Specifications PDF document.

Model Upgrade/Downgrade:

Zone	Rank	Vendor	Price	Build File	Options File
Western	Primary	HD CONSTRUCTION EQUIPMENT DEVELON NORTH AMERICA LLC	$80,970.00	Build	Options
Northern	Primary	HD CONSTRUCTION EQUIPMENT DEVELON NORTH AMERICA LLC	$80,970.00	Build	Options
Central	Primary	HD CONSTRUCTION EQUIPMENT DEVELON NORTH AMERICA LLC	$80,970.00	Build	Options
Southern	Primary	HD CONSTRUCTION EQUIPMENT DEVELON NORTH AMERICA LLC	$80,970.00	Build	Options

Bid Award

Contract: FSA26-EQU24.0, Equipment

Group: Loader: Skid Steer - 3,100 lbs. Operating Capacity - Tracked Type

Item: 259, John Deere, 331P, 331P

Description: Refer FSA Base Specifications PDF document.

Model Upgrade/Downgrade:

Zone	Rank	Vendor	Price	Build File	Options File
Western	Primary	Everglades Equipment Group	$72,645.00	Build	Options
	Alternate	Dobbs Equipment, LLC	$77,385.00	Build	Options
Northern	Primary	Everglades Equipment Group	$72,645.00	Build	Options
	Alternate	Dobbs Equipment, LLC	$77,385.00	Build	Options
Central	Primary	Everglades Equipment Group	$72,645.00	Build	Options
	Alternate	Dobbs Equipment, LLC	$75,685.00	Build	Options
Southern	Primary	Everglades Equipment Group	$72,645.00	Build	Options
	Alternate	Dobbs Equipment, LLC	$75,685.00	Build	Options

Bid Award

Contract: FSA26-EQU24.0, Equipment

Group: Loader: Skid Steer - 3,100 lbs. Operating Capacity - Tracked Type

Item: 260, Kioti, TL750, TL750

Description: Refer FSA Base Specifications PDF document.

Model Upgrade/Downgrade:

Zone	Rank	Vendor	Price	Build File	Options File
Western	Primary	OCALA TRACTOR, LCC	$60,900.00	Build	Options
Northern	Primary	OCALA TRACTOR, LCC	$60,900.00	Build	Options
Central	Primary	OCALA TRACTOR, LCC	$60,900.00	Build	Options
Southern	Primary	OCALA TRACTOR, LCC	$60,900.00	Build	Options

Bid Award

Contract: FSA26-EQU24.0, Equipment

Group: Loader: Skid Steer - 3,100 lbs. Operating Capacity - Tracked Type

Item: 261, Kubota, SVL 75-3, SVL 75-3

Description: Refer FSA Base Specifications PDF document.

Model Upgrade/Downgrade:

Zone	Rank	Vendor	Price	Build File	Options File
Western	Primary	Creel Tractor Company	$56,240.00	Build	Options
Northern	Primary Alternate	Creel Tractor Company Florida Coast Equipment, Inc.	$55,990.00 $57,105.00	Build Build	Options Options
Central	Primary Alternate	Creel Tractor Company Florida Coast Equipment, Inc.	$55,690.00 $57,105.00	Build Build	Options Options
Southern	Primary Alternate	Creel Tractor Company Florida Coast Equipment, Inc.	$55,590.00 $57,105.00	Build Build	Options Options

Bid Award

Contract: FSA26-EQU24.0, Equipment

Group: Loader: Skid Steer - 3,100 lbs. Operating Capacity - Tracked Type

Item: 263, New Holland, Compact Track Loader, C332

Description: Refer FSA Base Specifications PDF document.

Model Upgrade/Downgrade:

Zone	Rank	Vendor	Price	Build File	Options File
Western	Primary	OCALA TRACTOR, LCC	$75,500.00	Build	Options
	Alternate	Love Power Equipment, Inc	$77,500.00	Build	Options
Northern	Primary	OCALA TRACTOR, LCC	$75,000.00	Build	Options
	Alternate	Love Power Equipment, Inc	$76,500.00	Build	Options
Central	Primary	OCALA TRACTOR, LCC	$75,000.00	Build	Options
	Alternate	Love Power Equipment, Inc	$76,500.00	Build	Options
Southern	Primary	OCALA TRACTOR, LCC	$75,500.00	Build	Options
	Alternate	Love Power Equipment, Inc	$77,500.00	Build	Options

Bid Award

Contract: FSA26-EQU24.0, Equipment

Group: Loader: Skid Steer - 3,100 lbs. Operating Capacity - Tracked Type

Item: 265, Takeuchi, TL12V2, TL12V2

Description: Refer FSA Base Specifications PDF document.

Model Upgrade/Downgrade:

Zone	Rank	Vendor	Price	Build File	Options File
Western	Primary	Cowin Equipment Company	$89,762.00	Build	Options
Northern	Primary	Alta Construction Equipment Florida, LLC	$90,000.00	Build	Options
Central	Primary	Alta Construction Equipment Florida, LLC	$90,000.00	Build	Options
Southern	Primary	Alta Construction Equipment Florida, LLC	$90,000.00	Build	Options

Bid Award

Contract: FSA26-EQU24.0, Equipment

Group: Loader: Skid Steer - 3,100 lbs. Operating Capacity - Tracked Type

Item: 266, Yanmar, TL100VS, TL100VS

Description: Refer FSA Base Specifications PDF document.

Model Upgrade/Downgrade:

Zone	Rank	Vendor	Price	Build File	Options File
Western	Primary	National Equipment Dealers, LLC	$105,000.00	Build	Options
Northern	Primary	National Equipment Dealers, LLC	$105,000.00	Build	Options
Central	Primary	National Equipment Dealers, LLC	$105,000.00	Build	Options
Southern	Primary	National Equipment Dealers, LLC	$105,000.00	Build	Options

Bid Award

Contract: FSA26-EQU24.0, Equipment

Group: Loader: Wheel Loader - 1.5 cubic yd.

Item: 267, Case, 321F, 321F

Description: Refer FSA Base Specifications PDF document.

Model Upgrade/Downgrade:

Zone	Rank	Vendor	Price	Build File	Options File
Western	Primary	Innovative Equipment Services 2 LLC CASE Power & Equipment of Florida	$115,298.00	Build	Options
Northern	Primary	Innovative Equipment Services 2 LLC CASE Power & Equipment of Florida	$115,298.00	Build	Options
Central	Primary	Innovative Equipment Services 2 LLC CASE Power & Equipment of Florida	$115,298.00	Build	Options
Southern	Primary	Innovative Equipment Services 2 LLC CASE Power & Equipment of Florida	$115,298.00	Build	Options

Bid Award

Contract: FSA26-EQU24.0, Equipment

Group: Loader: Wheel Loader - 1.5 cubic yd.

Item: 268, Caterpillar, 908, 908

Description: Refer FSA Base Specifications PDF document.

Model Upgrade/Downgrade:

Zone	Rank	Vendor	Price	Build File	Options File
Western	Primary	Ring Power Corporation	$128,308.00	Build	Options
Northern	Primary	Ring Power Corporation	$128,308.00	Build	Options
Central	Primary	Ring Power Corporation	$128,308.00	Build	Options
Southern	Primary	Kelly Tractor Co	$127,310.00	Build	Options

Bid Award

Contract: FSA26-EQU24.0, Equipment

Group: Loader: Wheel Loader - 1.5 cubic yd.

Item: 269, Hitachi, ZW120, ZW120

Description: Refer FSA Base Specifications PDF document.

Model Upgrade/Downgrade:

Zone	Rank	Vendor	Price	Build File	Options File
Western	Primary	GREAT SOUTHERN EQUIPMENT, LLC	$143,168.00	Build	Options
Northern	Primary	GREAT SOUTHERN EQUIPMENT, LLC	$143,168.00	Build	Options
Central	Primary	GREAT SOUTHERN EQUIPMENT, LLC	$143,168.00	Build	Options
Southern	Primary	GREAT SOUTHERN EQUIPMENT, LLC	$143,168.00	Build	Options

Bid Award

Contract: FSA26-EQU24.0, Equipment

Group: Loader: Wheel Loader - 1.5 cubic yd.

Item: 270, John Deere, 324P, 324P

Description: Refer FSA Base Specifications PDF document.

Model Upgrade/Downgrade:

Zone	Rank	Vendor	Price	Build File	Options File
Western	Primary	Dobbs Equipment, LLC	$137,805.00	Build	Options
	Alternate	Everglades Equipment Group	$137,850.00	Build	Options
Northern	Primary	Dobbs Equipment, LLC	$137,805.00	Build	Options
	Alternate	Everglades Equipment Group	$137,850.00	Build	Options
Central	Primary	Dobbs Equipment, LLC	$134,855.00	Build	Options
	Alternate	Everglades Equipment Group	$137,850.00	Build	Options
Southern	Primary	Dobbs Equipment, LLC	$134,855.00	Build	Options
	Alternate	Everglades Equipment Group	$137,850.00	Build	Options

Bid Award

Contract: FSA26-EQU24.0, Equipment

Group: Loader: Wheel Loader - 1.5 cubic yd.

Item: 275, Volvo, L45, L45

Description: Refer FSA Base Specifications PDF document.

Model Upgrade/Downgrade:

Zone	Rank	Vendor	Price	Build File	Options File
Western	Primary	Cowin Equipment Company	$145,992.00	Build	Options
Northern	Primary	Alta Construction Equipment Florida, LLC	$146,000.00	Build	Options
Central	Primary	Alta Construction Equipment Florida, LLC	$146,000.00	Build	Options
Southern	Primary	Alta Construction Equipment Florida, LLC	$146,000.00	Build	Options

Bid Award

Contract: FSA26-EQU24.0, Equipment

Group: Loader: Wheel Loader - 1.5 cubic yd.

Item: 276, Yanmar, V12, V12

Description: Refer FSA Base Specifications PDF document.

Model Upgrade/Downgrade:

Zone	Rank	Vendor	Price	Build File	Options File
Western	Primary	National Equipment Dealers, LLC	$140,750.00	Build	Options
Northern	Primary	National Equipment Dealers, LLC	$140,750.00	Build	Options
Central	Primary	National Equipment Dealers, LLC	$140,750.00	Build	Options
Southern	Primary	National Equipment Dealers, LLC	$140,750.00	Build	Options

Bid Award

Contract: FSA26-EQU24.0, Equipment

Group: Loader: Wheel Loader - 3.0 cubic yd.

Item: 277, Case, 621G, 621G

Description: Refer FSA Base Specifications PDF document.

Model Upgrade/Downgrade:

Zone	Rank	Vendor	Price	Build File	Options File
Western	Primary	Innovative Equipment Services 2 LLC CASE Power & Equipment of Florida	$252,935.00	Build	Options
Northern	Primary	Innovative Equipment Services 2 LLC CASE Power & Equipment of Florida	$252,935.00	Build	Options
Central	Primary	Innovative Equipment Services 2 LLC CASE Power & Equipment of Florida	$252,935.00	Build	Options
Southern	Primary	Innovative Equipment Services 2 LLC CASE Power & Equipment of Florida	$252,935.00	Build	Options

Bid Award

Contract: FSA26-EQU24.0, Equipment

Group: Loader: Wheel Loader - 3.0 cubic yd.

Item: 278, Caterpillar, 926, 926

Description: Refer FSA Base Specifications PDF document.

Model Upgrade/Downgrade:

Zone	Rank	Vendor	Price	Build File	Options File
Western	Primary	Ring Power Corporation	$209,354.00	Build	Options
Northern	Primary	Ring Power Corporation	$209,354.00	Build	Options
Central	Primary	Ring Power Corporation	$209,354.00	Build	Options
Southern	Primary	Kelly Tractor Co	$202,695.00	Build	Options

Bid Award

Contract: FSA26-EQU24.0, Equipment

Group: Loader: Wheel Loader - 3.0 cubic yd.

Item: 279, DEVELON, DL220-7, DL220-7

Description: Refer FSA Base Specifications PDF document.

Model Upgrade/Downgrade:

Zone	Rank	Vendor	Price	Build File	Options File
Western	Primary	HD CONSTRUCTION EQUIPMENT DEVELON NORTH AMERICA LLC	$144,962.00	Build	Options
Northern	Primary	HD CONSTRUCTION EQUIPMENT DEVELON NORTH AMERICA LLC	$144,962.00	Build	Options
Central	Primary	HD CONSTRUCTION EQUIPMENT DEVELON NORTH AMERICA LLC	$144,962.00	Build	Options
Southern	Primary	HD CONSTRUCTION EQUIPMENT DEVELON NORTH AMERICA LLC	$144,962.00	Build	Options

Bid Award

Contract: FSA26-EQU24.0, Equipment

Group: Loader: Wheel Loader - 3.0 cubic yd.

Item: 280, Hitachi, ZW180, ZW180

Description: Refer FSA Base Specifications PDF document.

Model Upgrade/Downgrade:

Zone	Rank	Vendor	Price	Build File	Options File
Western	Primary	GREAT SOUTHERN EQUIPMENT, LLC	$232,139.00	Build	Options
Northern	Primary	GREAT SOUTHERN EQUIPMENT, LLC	$232,139.00	Build	Options
Central	Primary	GREAT SOUTHERN EQUIPMENT, LLC	$232,139.00	Build	Options
Southern	Primary	GREAT SOUTHERN EQUIPMENT, LLC	$232,139.00	Build	Options

Bid Award

Contract: FSA26-EQU24.0, Equipment

Group: Loader: Wheel Loader - 3.0 cubic yd.

Item: 281, Hyundai, HL940A, HL940A

Description: Refer FSA Base Specifications PDF document.

Model Upgrade/Downgrade:

Zone	Rank	Vendor	Price	Build File	Options File
Western	Primary	National Equipment Dealers, LLC	$205,000.00	Build	Options
Northern	Primary	National Equipment Dealers, LLC	$205,000.00	Build	Options
Central	Primary	National Equipment Dealers, LLC	$205,000.00	Build	Options
Southern	Primary	National Equipment Dealers, LLC	$205,000.00	Build	Options

Bid Award

Contract: FSA26-EQU24.0, Equipment

Group: Loader: Wheel Loader - 3.0 cubic yd.

Item: 282, John Deere, 524P, 524P

Description: Refer FSA Base Specifications PDF document.

Model Upgrade/Downgrade:

Zone	Rank	Vendor	Price	Build File	Options File
Western	Primary	Dobbs Equipment, LLC	$220,475.00	Build	Options
Northern	Primary	Dobbs Equipment, LLC	$220,475.00	Build	Options
Central	Primary	Dobbs Equipment, LLC	$216,815.00	Build	Options
Southern	Primary	Dobbs Equipment, LLC	$216,815.00	Build	Options

Bid Award

Contract: FSA26-EQU24.0, Equipment

Group: Loader: Wheel Loader - 3.0 cubic yd.

Item: 285, Volvo, L60, L60

Description: Refer FSA Base Specifications PDF document.

Model Upgrade/Downgrade:

Zone	Rank	Vendor	Price	Build File	Options File
Western	Primary	Cowin Equipment Company	$182,289.00	Build	Options
Northern	Primary	Alta Construction Equipment Florida, LLC	$182,000.00	Build	Options
Central	Primary	Alta Construction Equipment Florida, LLC	$182,000.00	Build	Options
Southern	Primary	Alta Construction Equipment Florida, LLC	$182,000.00	Build	Options

Bid Award

Contract: FSA26-EQU24.0, Equipment

Group: Loader: Wheel Loader - 5.75 cubic yd.

Item: 287, Caterpillar, 972, 972

Description: Refer FSA Base Specifications PDF document.

Model Upgrade/Downgrade:

Zone	Rank	Vendor	Price	Build File	Options File
Western	Primary	Ring Power Corporation	$559,067.00	Build	Options
Northern	Primary	Ring Power Corporation	$559,067.00	Build	Options
Central	Primary	Ring Power Corporation	$559,067.00	Build	Options
Southern	Primary	Kelly Tractor Co	$489,930.00	Build	Options

Bid Award

Contract: FSA26-EQU24.0, Equipment

Group: Loader: Wheel Loader - 5.75 cubic yd.

Item: 288, DEVELON, DL480-7, DL480-7

Description: Refer FSA Base Specifications PDF document.

Model Upgrade/Downgrade:

Zone	Rank	Vendor	Price	Build File	Options File
Western	Primary	HD CONSTRUCTION EQUIPMENT DEVELON NORTH AMERICA LLC	$348,630.00	Build	Options
Northern	Primary	HD CONSTRUCTION EQUIPMENT DEVELON NORTH AMERICA LLC	$348,630.00	Build	Options
Central	Primary	HD CONSTRUCTION EQUIPMENT DEVELON NORTH AMERICA LLC	$348,630.00	Build	Options
Southern	Primary	HD CONSTRUCTION EQUIPMENT DEVELON NORTH AMERICA LLC	$348,630.00	Build	Options

Bid Award

Contract: FSA26-EQU24.0, Equipment

Group: Loader: Wheel Loader - 5.75 cubic yd.

Item: 289, Hitachi, ZW310, ZW310

Description: Refer FSA Base Specifications PDF document.

Model Upgrade/Downgrade:

Zone	Rank	Vendor	Price	Build File	Options File
Western	Primary	GREAT SOUTHERN EQUIPMENT, LLC	$434,143.00	Build	Options
Northern	Primary	GREAT SOUTHERN EQUIPMENT, LLC	$434,143.00	Build	Options
Central	Primary	GREAT SOUTHERN EQUIPMENT, LLC	$434,143.00	Build	Options
Southern	Primary	GREAT SOUTHERN EQUIPMENT, LLC	$434,143.00	Build	Options

Bid Award

Contract: FSA26-EQU24.0, Equipment

Group: Loader: Wheel Loader - 5.75 cubic yd.

Item: 290, Hyundai, HL975, HL975

Description: Refer FSA Base Specifications PDF document.

Model Upgrade/Downgrade:

Zone	Rank	Vendor	Price	Build File	Options File
Western	Primary	National Equipment Dealers, LLC	$388,786.00	Build	Options
Northern	Primary	National Equipment Dealers, LLC	$388,786.00	Build	Options
Central	Primary	National Equipment Dealers, LLC	$388,786.00	Build	Options
Southern	Primary	National Equipment Dealers, LLC	$388,786.00	Build	Options

Bid Award

Contract: FSA26-EQU24.0, Equipment

Group: Loader: Wheel Loader - 5.75 cubic yd.

Item: 291, John Deere, 744P, 744P

Description: Refer FSA Base Specifications PDF document.

Model Upgrade/Downgrade:

Zone	Rank	Vendor	Price	Build File	Options File
Western	Primary	Dobbs Equipment, LLC	$492,185.00	Build	Options
Northern	Primary	Dobbs Equipment, LLC	$492,185.00	Build	Options
Central	Primary	Dobbs Equipment, LLC	$481,515.00	Build	Options
Southern	Primary	Dobbs Equipment, LLC	$481,515.00	Build	Options

Bid Award

Contract: FSA26-EQU24.0, Equipment

Group: Loader: Wheel Loader - 5.75 cubic yd.

Item: 293, Volvo, L150, L150

Description: Refer FSA Base Specifications PDF document.

Model Upgrade/Downgrade:

Zone	Rank	Vendor	Price	Build File	Options File
Western	Primary	Cowin Equipment Company	$469,117.00	Build	Options
Northern	Primary	Alta Construction Equipment Florida, LLC	$471,000.00	Build	Options
Central	Primary	Alta Construction Equipment Florida, LLC	$471,000.00	Build	Options
Southern	Primary	Alta Construction Equipment Florida, LLC	$471,000.00	Build	Options

Bid Award

Contract: FSA26-EQU24.0, Equipment

Group: Low Speed Vehicle: Electric Type

Item: 295, GEM, e2, e2

Description: Refer FSA Base Specifications PDF document.

Model Upgrade/Downgrade:

Zone	Rank	Vendor	Price	Build File	Options File
Western	Primary	Love Power Equipment, Inc	$20,900.00	Build	Options
Northern	Primary	Love Power Equipment, Inc	$20,500.00	Build	Options
Central	Primary	Love Power Equipment, Inc	$20,500.00	Build	Options
Southern	Primary	Love Power Equipment, Inc	$20,900.00	Build	Options

Bid Award

Contract: FSA26-EQU24.0, Equipment

Group: Low Speed Vehicle: Electric Type

Item: 296, GEM, E4, E4

Description: Refer FSA Base Specifications PDF document.

Model Upgrade/Downgrade:

Zone	Rank	Vendor	Price	Build File	Options File
Western	Primary	Love Power Equipment, Inc	$22,800.00	Build	Options
Northern	Primary	Love Power Equipment, Inc	$22,500.00	Build	Options
Central	Primary	Love Power Equipment, Inc	$22,500.00	Build	Options
Southern	Primary	Love Power Equipment, Inc	$22,800.00	Build	Options

Bid Award

Contract: FSA26-EQU24.0, Equipment

Group: Low Speed Vehicle: Electric Type

Item: 297, ICON, ICON i40X, ICON i40X

Description: Refer FSA Base Specifications PDF document.

Model Upgrade/Downgrade:

Zone	Rank	Vendor	Price	Build File	Options File
Western	Primary	McKibben Powersports Inc.	$11,495.00	Build	Options
	Alternate	Love Power Equipment, Inc	$12,595.00	Build	Options
	Alternate	Federal Contracts LLC DBA Federal Contracts Company	$14,480.00	Build	Options
Northern	Primary	McKibben Powersports Inc.	$11,195.00	Build	Options
	Alternate	Love Power Equipment, Inc	$12,295.00	Build	Options
	Alternate	Federal Contracts LLC DBA Federal Contracts Company	$14,480.00	Build	Options
Central	Primary	McKibben Powersports Inc.	$10,795.00	Build	Options
	Alternate	Love Power Equipment, Inc	$12,295.00	Build	Options
	Alternate	Federal Contracts LLC DBA Federal Contracts Company	$14,480.00	Build	Options
Southern	Primary	McKibben Powersports Inc.	$11,095.00	Build	Options
	Alternate	Love Power Equipment, Inc	$12,595.00	Build	Options
	Alternate	Federal Contracts LLC DBA Federal Contracts Company	$14,480.00	Build	Options

Bid Award

Contract: FSA26-EQU24.0, Equipment

Group: Motor Grader: Large

Item: 300, Caterpillar, 120, 120

Description: Refer FSA Base Specifications PDF document.

Model Upgrade/Downgrade:

Zone	Rank	Vendor	Price	Build File	Options File
Western	Primary	Ring Power Corporation	$289,429.00	Build	Options
Northern	Primary	Ring Power Corporation	$289,429.00	Build	Options
Central	Primary	Ring Power Corporation	$289,429.00	Build	Options
Southern	Primary	Kelly Tractor Co	$268,250.00	Build	Options

Bid Award

Contract: FSA26-EQU24.0, Equipment

Group: Motor Grader: Large

Item: 301, John Deere, 620G, 620G

Description: Refer FSA Base Specifications PDF document.

Model Upgrade/Downgrade:

Zone	Rank	Vendor	Price	Build File	Options File
Western	Primary	Dobbs Equipment, LLC	$273,625.00	Build	Options
Northern	Primary	Dobbs Equipment, LLC	$273,625.00	Build	Options
Central	Primary	Dobbs Equipment, LLC	$267,615.00	Build	Options
Southern	Primary	Dobbs Equipment, LLC	$267,615.00	Build	Options

Bid Award

Contract: FSA26-EQU24.0, Equipment

Group: Motor Grader: Small

Item: 304, LeeBoy, 685D, 685D

Description: Refer FSA Base Specifications PDF document.

Model Upgrade/Downgrade:

Zone	Rank	Vendor	Price	Build File	Options File
Western	Primary	Dobbs Equipment, LLC	$275,525.00	Build	Options
Northern	Primary	Dobbs Equipment, LLC	$275,525.00	Build	Options
Central	Primary	Dobbs Equipment, LLC	$275,525.00	Build	Options
Southern	Primary	Dobbs Equipment, LLC	$275,525.00	Build	Options

Bid Award

Contract: FSA26-EQU24.0, Equipment

Group: Motor Grader: Small

Item: 306, Weiler, G65, G65

Description: Refer FSA Base Specifications PDF document.

Model Upgrade/Downgrade:

Zone	Rank	Vendor	Price	Build File	Options File
Western	Primary	Ring Power Corporation	$229,915.00	Build	Options
Northern	Primary	Ring Power Corporation	$229,915.00	Build	Options
Central	Primary	Ring Power Corporation	$229,915.00	Build	Options
Southern	Primary	Kelly Tractor Co	$220,650.00	Build	Options

Bid Award

Contract: FSA26-EQU24.0, Equipment

Group: Mower: 15ft. Flex Wing Rotary Mower

Item: 307, Bush Hog, 4115, 4115

Description: Refer FSA Base Specifications PDF document.

Model Upgrade/Downgrade:

Zone	Rank	Vendor	Price	Build File	Options File
Western	Primary	Alamo Group Ag Americas LLC	$35,702.00	Build	Options
Northern	Primary	Alamo Group Ag Americas LLC	$35,702.00	Build	Options
Central	Primary	Alamo Group Ag Americas LLC	$35,702.00	Build	Options
Southern	Primary	Alamo Group Ag Americas LLC	$35,702.00	Build	Options

Bid Award

Contract: FSA26-EQU24.0, Equipment

Group: Mower: 15ft. Flex Wing Rotary Mower

Item: 308, Bush-Whacker, ST-180, ST-180

Description: Refer FSA Base Specifications PDF document.

Model Upgrade/Downgrade:

Zone	Rank	Vendor	Price	Build File	Options File
Western	Primary	OCALA TRACTOR, LCC	$26,900.00	Build	Options
Northern	Primary	OCALA TRACTOR, LCC	$26,500.00	Build	Options
Central	Primary	OCALA TRACTOR, LCC	$26,500.00	Build	Options
Southern	Primary	OCALA TRACTOR, LCC	$27,300.00	Build	Options

Bid Award

Contract: FSA26-EQU24.0, Equipment

Group: Mower: 15ft. Flex Wing Rotary Mower

Item: 309, John Deere, FC15M, FC15M

Description: Refer FSA Base Specifications PDF document.

Model Upgrade/Downgrade:

Zone	Rank	Vendor	Price	Build File	Options File
Western	Primary	Everglades Equipment Group	$28,250.00	Build	Options
Northern	Primary	Everglades Equipment Group	$28,250.00	Build	Options
Central	Primary	Everglades Equipment Group	$28,250.00	Build	Options
Southern	Primary	Everglades Equipment Group	$28,250.00	Build	Options

Bid Award

Contract: FSA26-EQU24.0, Equipment

Group: Mower: 15ft. Flex Wing Rotary Mower

Item: 310, Land Pride, RC4715, RC4715

Description: Refer FSA Base Specifications PDF document.

Model Upgrade/Downgrade:

Zone	Rank	Vendor	Price	Build File	Options File
Western	Primary	Creel Tractor Company	$25,480.00	Build	Options
Northern	Primary	Creel Tractor Company	$25,280.00	Build	Options
Central	Primary	Creel Tractor Company	$24,980.00	Build	Options
Southern	Primary	Creel Tractor Company	$24,380.00	Build	Options

Bid Award

Contract: FSA26-EQU24.0, Equipment

Group: Mower: 15ft. Flex Wing Rotary Mower

Item: 311, RhinoAg, 4150, 4150

Description: Refer FSA Base Specifications PDF document.

Model Upgrade/Downgrade:

Zone	Rank	Vendor	Price	Build File	Options File
Western	Primary	Alamo Group Ag Americas LLC	$34,419.00	Build	Options
Northern	Primary	Alamo Group Ag Americas LLC	$34,419.00	Build	Options
Central	Primary	Alamo Group Ag Americas LLC	$34,419.00	Build	Options
Southern	Primary	Alamo Group Ag Americas LLC	$34,419.00	Build	Options

Bid Award

Contract: FSA26-EQU24.0, Equipment

Group: Mower: 15ft. Flex Wing Rotary Mower

Item: 312, Schulte, FX-1800, FX-1800

Description: Refer FSA Base Specifications PDF document.

Model Upgrade/Downgrade:

Zone	Rank	Vendor	Price	Build File	Options File
Western					
Northern					
Central	Primary	Kelly Tractor Co	$41,000.00	Build	Options
Southern	Primary	Kelly Tractor Co	$41,000.00	Build	Options

Bid Award

Contract: FSA26-EQU24.0, Equipment

Group: Mower: 15ft. Flex Wing Rotary Mower

Item: 313, Woods, BW15.52, BW15.52

Description: Refer FSA Base Specifications PDF document.

Model Upgrade/Downgrade:

Zone	Rank	Vendor	Price	Build File	Options File
Western	Primary	OCALA TRACTOR, LCC	$20,800.00	Build	Options
	Alternate	Everglades Equipment Group	$21,950.00	Build	Options
Northern	Primary	OCALA TRACTOR, LCC	$20,400.00	Build	Options
	Alternate	Everglades Equipment Group	$21,950.00	Build	Options
Central	Primary	OCALA TRACTOR, LCC	$20,400.00	Build	Options
	Alternate	Everglades Equipment Group	$21,950.00	Build	Options
	Alternate	Kelly Tractor Co	$25,770.00	Build	Options
Southern	Primary	OCALA TRACTOR, LCC	$20,400.00	Build	Options
	Alternate	Everglades Equipment Group	$21,950.00	Build	Options
	Alternate	Kelly Tractor Co	$25,770.00	Build	Options

Bid Award

Contract: FSA26-EQU24.0, Equipment

Group: Mower: Remote Controlled Brush Mower

Item: 316, AGRIA, 9600-112, 9600-112

Description: Refer FSA Base Specifications PDF document.

Model Upgrade/Downgrade:

Zone	Rank	Vendor	Price	Build File	Options File
Western	Primary	Pat`s Pump & Blower	$56,500.00	Build	Options
Northern	Primary	Pat`s Pump & Blower	$56,500.00	Build	Options
Central	Primary	Pat`s Pump & Blower	$56,500.00	Build	Options
Southern	Primary	Pat`s Pump & Blower	$56,500.00	Build	Options

Bid Award

Contract: FSA26-EQU24.0, Equipment

Group: Mower: Remote Controlled Brush Mower

Item: 317, Alamo Industrial, RC28, RC28

Description: Refer FSA Base Specifications PDF document.

Model Upgrade/Downgrade:

Zone	Rank	Vendor	Price	Build File	Options File
Western	Primary	Alamo Group Municipal Mowing Solutions LLC	$60,379.00	Build	Options
Northern	Primary	Alamo Group Municipal Mowing Solutions LLC	$60,379.00	Build	Options
Central	Primary	Alamo Group Municipal Mowing Solutions LLC	$60,379.00	Build	Options
Southern	Primary	Alamo Group Municipal Mowing Solutions LLC	$60,379.00	Build	Options

Bid Award

Contract: FSA26-EQU24.0, Equipment

Group: Mower: Remote Controlled Brush Mower

Item: 319, RC Mowers, R-52, R-52

Description: Refer FSA Base Specifications PDF document.

Model Upgrade/Downgrade:

Zone	Rank	Vendor	Price	Build File	Options File
Western	Primary	Jet-Vac Equipment Company, LLC	$70,394.00	Build	Options
Northern	Primary	Jet-Vac Equipment Company, LLC	$70,394.00	Build	Options
Central	Primary	Jet-Vac Equipment Company, LLC	$70,394.00	Build	Options
Southern	Primary	Jet-Vac Equipment Company, LLC	$70,394.00	Build	Options

Bid Award

Contract: FSA26-EQU24.0, Equipment

Group: Mower: Remote Controlled Brush Mower

Item: 320, Scag, RC Extreme Slope Mower, SRC-52D-37BV-EFI

Description: Refer FSA Base Specifications PDF document.

Model Upgrade/Downgrade:

Zone	Rank	Vendor	Price	Build File	Options File
Western					
Northern					
Central					
Southern	Primary	Green Thumb Palm Beach	$53,178.00	Build	Options

Bid Award

Contract: FSA26-EQU24.0, Equipment

Group: Mower: Zero Turn Radius Mower

Item: 321, Bad Boy, Maverick HD, BMH60FX730

Description: Refer FSA Base Specifications PDF document.

Model Upgrade/Downgrade:

Zone	Rank	Vendor	Price	Build File	Options File
Western	Primary	Love Power Equipment, Inc	$10,100.00	Build	Options
Northern	Primary	Love Power Equipment, Inc	$10,000.00	Build	Options
Central	Primary	Love Power Equipment, Inc	$9,900.00	Build	Options
Southern	Primary	Love Power Equipment, Inc	$10,100.00	Build	Options

Bid Award

Contract: FSA26-EQU24.0, Equipment

Group: Mower: Zero Turn Radius Mower

Item: 322, Bad Boy, Rebel SD, BRB61ZT740

Description: Refer FSA Base Specifications PDF document.

Model Upgrade/Downgrade:

Zone	Rank	Vendor	Price	Build File	Options File
Western	Primary Alternate	OCALA TRACTOR, LCC Love Power Equipment, Inc	$7,150.00 $11,164.00	Build Build	Options Options
Northern	Primary Alternate	OCALA TRACTOR, LCC Love Power Equipment, Inc	$6,950.00 $9,864.00	Build Build	Options Options
Central	Primary Alternate	OCALA TRACTOR, LCC Love Power Equipment, Inc	$6,950.00 $9,864.00	Build Build	Options Options
Southern	Primary Alternate	OCALA TRACTOR, LCC Love Power Equipment, Inc	$7,350.00 $11,164.00	Build Build	Options Options

Bid Award

Contract: FSA26-EQU24.0, Equipment

Group: Mower: Zero Turn Radius Mower

Item: 323, Bobcat, ZT6100, ZT6100

Description: Refer FSA Base Specifications PDF document.

Model Upgrade/Downgrade:

Zone	Rank	Vendor	Price	Build File	Options File
Western	Primary	Doosan Bobcat North America, Inc.	$11,866.00	Build	Options
Northern	Primary	Doosan Bobcat North America, Inc.	$11,866.00	Build	Options
Central	Primary	Doosan Bobcat North America, Inc.	$11,866.00	Build	Options
Southern	Primary	Doosan Bobcat North America, Inc.	$11,866.00	Build	Options

Bid Award

Contract: FSA26-EQU24.0, Equipment

Group: Mower: Zero Turn Radius Mower

Item: 324, Dixie Chopper, Eagle, 2760KW

Description: Refer FSA Base Specifications PDF document.

Model Upgrade/Downgrade:

Zone	Rank	Vendor	Price	Build File	Options File
Western	Primary	Alamo Group Ag Americas LLC	$15,680.00	Build	Options
Northern	Primary	Alamo Group Ag Americas LLC	$15,680.00	Build	Options
Central	Primary	Alamo Group Ag Americas LLC	$15,680.00	Build	Options
Southern	Primary	Alamo Group Ag Americas LLC	$15,680.00	Build	Options

Bid Award

Contract: FSA26-EQU24.0, Equipment

Group: Mower: Zero Turn Radius Mower

Item: 328, Exmark, Lazer Z S-Series, LRS801GKA604A1

Description: Refer FSA Base Specifications PDF document.

Model Upgrade/Downgrade:

Zone	Rank	Vendor	Price	Build File	Options File
Western	Primary	Green Thumb Palm Beach	$11,359.00	Build	Options
Northern	Primary	Green Thumb Palm Beach	$11,359.00	Build	Options
Central	Primary	Green Thumb Palm Beach	$11,359.00	Build	Options
Southern	Primary	Green Thumb Palm Beach	$11,359.00	Build	Options

Bid Award

Contract: FSA26-EQU24.0, Equipment

Group: Mower: Zero Turn Radius Mower

Item: 329, Ferris, ISX2200, 5902078

Description: Refer FSA Base Specifications PDF document.

Model Upgrade/Downgrade:

Zone	Rank	Vendor	Price	Build File	Options File
Western	Primary	Green Thumb Palm Beach	$15,899.00	Build	Options
Northern	Primary	Green Thumb Palm Beach	$14,899.00	Build	Options
Central	Primary	Green Thumb Palm Beach	$14,749.00	Build	Options
Southern	Primary	Green Thumb Palm Beach	$14,624.00	Build	Options

Bid Award

Contract: FSA26-EQU24.0, Equipment

Group: Mower: Zero Turn Radius Mower

Item: 330, Grasshopper, 225, 225

Description: Refer FSA Base Specifications PDF document.

Model Upgrade/Downgrade:

Zone	Rank	Vendor	Price	Build File	Options File
Western	Primary	Federal Contracts LLC DBA Federal Contracts Company	$15,480.00	Build	Options
Northern	Primary	Federal Contracts LLC DBA Federal Contracts Company	$15,480.00	Build	Options
Central	Primary	Federal Contracts LLC DBA Federal Contracts Company	$15,480.00	Build	Options
Southern	Primary	Federal Contracts LLC DBA Federal Contracts Company	$15,480.00	Build	Options

Bid Award

Contract: FSA26-EQU24.0, Equipment

Group: Mower: Zero Turn Radius Mower

Item: 331, Gravely, Proturn 260, 992551

Description: Refer FSA Base Specifications PDF document.

Model Upgrade/Downgrade:

Zone	Rank	Vendor	Price	Build File	Options File
Western	Primary	OCALA TRACTOR, LCC	$10,500.00	Build	Options
	Alternate	ARIENS COMPANY	$11,101.00	Build	Options
Northern	Primary	OCALA TRACTOR, LCC	$10,200.00	Build	Options
	Alternate	ARIENS COMPANY	$11,101.00	Build	Options
Central	Primary	OCALA TRACTOR, LCC	$10,200.00	Build	Options
	Alternate	ARIENS COMPANY	$11,101.00	Build	Options
Southern	Primary	OCALA TRACTOR, LCC	$10,500.00	Build	Options
	Alternate	ARIENS COMPANY	$11,101.00	Build	Options

Bid Award

Contract: FSA26-EQU24.0, Equipment

Group: Mower: Zero Turn Radius Mower

Item: 332, Husqvarna, Z560, Z560

Description: Refer FSA Base Specifications PDF document.

Model Upgrade/Downgrade:

Zone	Rank	Vendor	Price	Build File	Options File
Western	Primary	Love Power Equipment, Inc	$13,259.00	Build	Options
	Alternate	Federal Contracts LLC DBA Federal Contracts Company	$14,665.00	Build	Options
Northern	Primary	Love Power Equipment, Inc	$12,959.00	Build	Options
	Alternate	Federal Contracts LLC DBA Federal Contracts Company	$14,665.00	Build	Options
Central	Primary	Love Power Equipment, Inc	$12,959.00	Build	Options
	Alternate	Federal Contracts LLC DBA Federal Contracts Company	$14,665.00	Build	Options
Southern	Primary	Love Power Equipment, Inc	$13,259.00	Build	Options
	Alternate	Federal Contracts LLC DBA Federal Contracts Company	$14,665.00	Build	Options

Bid Award

Contract: FSA26-EQU24.0, Equipment

Group: Mower: Zero Turn Radius Mower

Item: 333, Hustler, X-One, 943795

Description: Refer FSA Base Specifications PDF document.

Model Upgrade/Downgrade:

Zone	Rank	Vendor	Price	Build File	Options File
Western	Primary	Green Thumb Palm Beach	$15,021.00	Build	Options
Northern	Primary	Green Thumb Palm Beach	$13,421.00	Build	Options
Central	Primary	Green Thumb Palm Beach	$13,026.00	Build	Options
Southern	Primary	Green Thumb Palm Beach	$12,631.00	Build	Options

Bid Award

Contract: FSA26-EQU24.0, Equipment

Group: Mower: Zero Turn Radius Mower

Item: 335, Kubota, Z725KHNC-60, Z725KHNC-60

Description: Refer FSA Base Specifications PDF document.

Model Upgrade/Downgrade:

Zone	Rank	Vendor	Price	Build File	Options File
Western	Primary	Creel Tractor Company	$10,990.00	Build	Options
Northern	Primary Alternate	Florida Coast Equipment, Inc. Creel Tractor Company	$10,622.00 $10,790.00	Build Build	Options Options
Central	Primary Alternate	Creel Tractor Company Florida Coast Equipment, Inc.	$10,490.00 $10,622.00	Build Build	Options Options
Southern	Primary Alternate	Creel Tractor Company Florida Coast Equipment, Inc.	$10,290.00 $10,622.00	Build Build	Options Options

Bid Award

Contract: FSA26-EQU24.0, Equipment

Group: Mower: Zero Turn Radius Mower

Item: 337, Scag, Tiger Cat II, STCII61V-26FTEFI

Description: Refer FSA Base Specifications PDF document.

Model Upgrade/Downgrade:

Zone	Rank	Vendor	Price	Build File	Options File
Western	Primary	Green Thumb Palm Beach	$10,748.00	Build	Options
Northern	Primary	Green Thumb Palm Beach	$10,748.00	Build	Options
Central	Primary	Green Thumb Palm Beach	$10,748.00	Build	Options
Southern	Primary	Green Thumb Palm Beach	$10,748.00	Build	Options

Bid Award

Contract: FSA26-EQU24.0, Equipment

Group: Mower: Zero Turn Radius Mower

Item: 339, Wright, ZXL, WZXL61S61E8E1B

Description: Refer FSA Base Specifications PDF document.

Model Upgrade/Downgrade:

Zone	Rank	Vendor	Price	Build File	Options File
Western	Primary	Green Thumb Palm Beach	$13,980.00	Build	Options
Northern	Primary	Green Thumb Palm Beach	$12,380.00	Build	Options
Central	Primary	Green Thumb Palm Beach	$12,380.00	Build	Options
Southern	Primary	Green Thumb Palm Beach	$12,380.00	Build	Options

Bid Award

Contract: FSA26-EQU24.0, Equipment

Group: Pallet Jack: Electric 4,500 lbs. Capacity

Item: 341, Clark, WPX45, WPX45

Description: Refer FSA Base Specifications PDF document.

Model Upgrade/Downgrade:

Zone	Rank	Vendor	Price	Build File	Options File
Western	Primary	National Lift Truck Service	$6,928.00	Build	Options
Northern	Primary	National Lift Truck Service	$6,928.00	Build	Options
Central	Primary	National Lift Truck Service	$6,928.00	Build	Options
Southern	Primary	National Lift Truck Service	$6,873.00	Build	Options

Bid Award

Contract: FSA26-EQU24.0, Equipment

Group: Pallet Jack: Electric 4,500 lbs. Capacity

Item: 343, Hangcha, WP22Li, CBD22-AC1-NAI

Description: Refer FSA Base Specifications PDF document.

Model Upgrade/Downgrade:

Zone	Rank	Vendor	Price	Build File	Options File
Western	Primary	National Lift Truck Service	$6,252.00	Build	Options
Northern	Primary	National Lift Truck Service	$6,252.00	Build	Options
Central	Primary	National Lift Truck Service	$6,252.00	Build	Options
Southern	Primary	National Lift Truck Service	$6,252.00	Build	Options

Bid Award

Contract: FSA26-EQU24.0, Equipment

Group: Pallet Jack: Electric 4,500 lbs. Capacity

Item: 345, Jungheinrich, EJE120, EJE120

Description: Refer FSA Base Specifications PDF document.

Model Upgrade/Downgrade:

Zone	Rank	Vendor	Price	Build File	Options File
Western					
Northern					
Central					
Southern	Primary	Kelly Tractor Co	$9,900.00	Build	Options

Bid Award

Contract: FSA26-EQU24.0, Equipment

Group: Pallet Jack: Electric 4,500 lbs. Capacity

Item: 346, Mitsubishi, PW23, PW23

Description: Refer FSA Base Specifications PDF document.

Model Upgrade/Downgrade:

Zone	Rank	Vendor	Price	Build File	Options File
Western					
Northern					
Central					
Southern	Primary	Kelly Tractor Co	$9,900.00	Build	Options

Bid Award

Contract: FSA26-EQU24.0, Equipment

Group: Pipe Inspection: Battery Operated Pipe Crawler Inspection System

Item: 349, Pipe Trekker, A-200 Pipe Crawler, A-200

Description: Refer FSA Base Specifications PDF document.

Model Upgrade/Downgrade:

Zone	Rank	Vendor	Price	Build File	Options File
Western	Primary	Pat`s Pump & Blower	$85,000.00	Build	Options
Northern	Primary	Pat`s Pump & Blower	$85,000.00	Build	Options
Central	Primary	Pat`s Pump & Blower	$85,000.00	Build	Options
Southern	Primary	Pat`s Pump & Blower	$85,000.00	Build	Options

Bid Award

Contract: FSA26-EQU24.0, Equipment

Group: Pipe Inspection: External Power Pipe Crawler Inspection System

Item: 350, RapidView, Mainline HD, Mainline HD

Description: Refer FSA Base Specifications PDF document.

Model Upgrade/Downgrade:

Zone	Rank	Vendor	Price	Build File	Options File
Western	Primary	Jet-Vac Equipment Company, LLC	$184,282.00	Build	Options
Northern	Primary	Jet-Vac Equipment Company, LLC	$184,282.00	Build	Options
Central	Primary	Jet-Vac Equipment Company, LLC	$184,282.00	Build	Options
Southern	Primary	Jet-Vac Equipment Company, LLC	$184,282.00	Build	Options

Bid Award

Contract: FSA26-EQU24.0, Equipment

Group: Pipe Inspection: External Power Pipe Crawler Inspection System

Item: 351, Aries Industries, Voyager, TR400

Description: Refer FSA Base Specifications PDF document.

Model Upgrade/Downgrade:

Zone	Rank	Vendor	Price	Build File	Options File
Western	Primary	Evervac Equipment	$135,731.00	Build	Options
Northern	Primary	Evervac Equipment	$135,731.00	Build	Options
Central	Primary	Evervac Equipment	$135,731.00	Build	Options
Southern	Primary	Evervac Equipment	$135,731.00	Build	Options

Bid Award

Contract: FSA26-EQU24.0, Equipment

Group: Pipe Inspection: External Power Pipe Crawler Inspection System

Item: 657, Envirosight, Rovver X, Rovver X

Description: Refer FSA Base Specifications PDF document.

Model Upgrade/Downgrade:

Zone	Rank	Vendor	Price	Build File	Options File
Western	Primary	Environmental Products Group	$110,037.00	Build	Options
Northern	Primary	Environmental Products Group	$110,037.00	Build	Options
Central	Primary	Environmental Products Group	$110,037.00	Build	Options
Southern	Primary	Environmental Products Group	$110,037.00	Build	Options

Bid Award

Contract: FSA26-EQU24.0, Equipment

Group: Pipe Inspection: External Power Pipe Crawler Inspection System

Item: 658, Minicam, ACR HD, ACR HD

Description: Refer FSA Base Specifications PDF document.

Model Upgrade/Downgrade:

Zone	Rank	Vendor	Price	Build File	Options File
Western	Primary	Southern Sewer Equipment Sales	$112,737.00	Build	Options
Northern	Primary	Southern Sewer Equipment Sales	$112,737.00	Build	Options
Central	Primary	Southern Sewer Equipment Sales	$112,737.00	Build	Options
Southern	Primary	Southern Sewer Equipment Sales	$112,737.00	Build	Options

Bid Award

Contract: FSA26-EQU24.0, Equipment

Group: Portable Signal: Portable Signal - Trailer Mounted

Item: 352, OMJC Signal, Light Duty Portable Traffic Signal, LDPTS-S

Description: Refer FSA Base Specifications PDF document.

Model Upgrade/Downgrade:

Zone	Rank	Vendor	Price	Build File	Options File
Western	Primary	OMJC Signal Inc	$24,521.00	Build	Options
Northern	Primary	OMJC Signal Inc	$24,521.00	Build	Options
Central	Primary	OMJC Signal Inc	$24,521.00	Build	Options
Southern	Primary	OMJC Signal Inc	$24,521.00	Build	Options

Bid Award

Contract: FSA26-EQU24.0, Equipment

Group: Portable Signal: Portable Signal - Trailer Mounted

Item: 659, Ver-Mac, TLD-3612-G3, TLD-3612-G3

Description: Refer FSA Base Specifications PDF document.

Model Upgrade/Downgrade:

Zone	Rank	Vendor	Price	Build File	Options File
Western	Primary	Federal Contracts LLC DBA Federal Contracts Company	$38,973.00	Build	Options
Northern	Primary	Federal Contracts LLC DBA Federal Contracts Company	$38,973.00	Build	Options
Central	Primary	Federal Contracts LLC DBA Federal Contracts Company	$38,973.00	Build	Options
Southern	Primary	Federal Contracts LLC DBA Federal Contracts Company	$38,973.00	Build	Options

Bid Award

Contract: FSA26-EQU24.0, Equipment

Group: Pump: Mobile Pump

Item: 353, Atlas Copco, PAS F66 KD, PAS F66 KD

Description: Refer FSA Base Specifications PDF document.

Model Upgrade/Downgrade:

Zone	Rank	Vendor	Price	Build File	Options File
Western					
Northern					
Central					
Southern	Primary	Kelly Tractor Co	$59,990.00	Build	Options

Bid Award

Contract: FSA26-EQU24.0, Equipment

Group: Pump: Mobile Pump

Item: 354, BBA Pumps, BA150E, BA150E

Description: Refer FSA Base Specifications PDF document.

Model Upgrade/Downgrade:

Zone	Rank	Vendor	Price	Build File	Options File
Western	Primary	BBA Pumps, Inc.	$59,562.00	Build	Options
Northern	Primary	BBA Pumps, Inc.	$59,562.00	Build	Options
Central	Primary	BBA Pumps, Inc.	$59,562.00	Build	Options
Southern	Primary	BBA Pumps, Inc.	$59,562.00	Build	Options

Bid Award

Contract: FSA26-EQU24.0, Equipment

Group: Pump: Mobile Pump

Item: 356, Global Pump, 6GSTAP, 6GSTAP

Description: Refer FSA Base Specifications PDF document.

Model Upgrade/Downgrade:

Zone	Rank	Vendor	Price	Build File	Options File
Western	Primary	Mersino Dewatering LLC	$59,800.00	Build	
Northern	Primary	Mersino Dewatering LLC	$59,800.00	Build	
Central	Primary	Mersino Dewatering LLC	$59,800.00	Build	
Southern	Primary	Mersino Dewatering LLC	$59,800.00	Build	

Bid Award

Contract: FSA26-EQU24.0, Equipment

Group: Pump: Mobile Pump

Item: 357, Godwin, CD 150S, CD 150S

Description: Refer FSA Base Specifications PDF document.

Model Upgrade/Downgrade:

Zone	Rank	Vendor	Price	Build File	Options File
Western	Primary	Xylem Dewatering Solutions, Inc.	$55,716.00	Build	Options
Northern	Primary	Xylem Dewatering Solutions, Inc.	$55,716.00	Build	Options
Central	Primary	Xylem Dewatering Solutions, Inc.	$55,716.00	Build	Options
Southern	Primary	Xylem Dewatering Solutions, Inc.	$55,716.00	Build	Options

Bid Award

Contract: FSA26-EQU24.0, Equipment

Group: Pump: Mobile Pump

Item: 359, MWI, CT006, CT006

Description: Refer FSA Base Specifications PDF document.

Model Upgrade/Downgrade:

Zone	Rank	Vendor	Price	Build File	Options File
Western	Primary	MWI Corporation	$54,345.00	Build	Options
Northern	Primary	MWI Corporation	$54,345.00	Build	Options
Central	Primary	MWI Corporation	$54,345.00	Build	Options
Southern	Primary	MWI Corporation	$54,345.00	Build	Options

Bid Award

Contract: FSA26-EQU24.0, Equipment

Group: Pump: Mobile Pump

Item: 360, Opifex-Synergy, Pump Centrif-Trash 6" AP-ST-OP-D-T, Pump Centrif-Trash 6" AP-ST-OP-D-T

Description: Refer FSA Base Specifications PDF document.

Model Upgrade/Downgrade:

Zone	Rank	Vendor	Price	Build File	Options File
Western	Primary	Opifex-Synergy	$69,572.00	Build	Options
Northern	Primary	Opifex-Synergy	$69,572.00	Build	Options
Central	Primary	Opifex-Synergy	$69,572.00	Build	Options
Southern	Primary	Opifex-Synergy	$69,572.00	Build	Options

Bid Award

Contract: FSA26-EQU24.0, Equipment

Group: Pump: Mobile Pump

Item: 361, Pioneer, PP66S12L71, PP66S12L71

Description: Refer FSA Base Specifications PDF document.

Model Upgrade/Downgrade:

Zone	Rank	Vendor	Price	Build File	Options File
Western	Primary	Tom Evans Environmental, Inc.	$70,070.00	Build	Options
Northern	Primary	Tom Evans Environmental, Inc.	$69,070.00	Build	Options
Central	Primary	Tom Evans Environmental, Inc.	$69,070.00	Build	Options
Southern	Primary	Tom Evans Environmental, Inc.	$69,070.00	Build	Options

Bid Award

Contract: FSA26-EQU24.0, Equipment

Group: Pump: Mobile Pump

Item: 363, Thompson Pump, 6JSC, 6JSC

Description: Refer FSA Base Specifications PDF document.

Model Upgrade/Downgrade:

Zone	Rank	Vendor	Price	Build File	Options File
Western	Primary	Thompson Pump & Manufacturing Company Inc.	$49,892.00	Build	Options
Northern	Primary	Thompson Pump & Manufacturing Company Inc.	$49,892.00	Build	Options
Central	Primary	Thompson Pump & Manufacturing Company Inc.	$49,892.00	Build	Options
Southern	Primary	Thompson Pump & Manufacturing Company Inc.	$49,892.00	Build	Options

Bid Award

Contract: FSA26-EQU24.0, Equipment

Group: Pump: Mobile Pump

Item: 364, Tradewinds, T66P, T66P

Description: Refer FSA Base Specifications PDF document.

Model Upgrade/Downgrade:

Zone	Rank	Vendor	Price	Build File	Options File
Western	Primary	Tradewinds Power Corp.	$57,000.00	Build	Options
Northern	Primary	Tradewinds Power Corp.	$57,000.00	Build	Options
Central	Primary	Tradewinds Power Corp.	$57,000.00	Build	Options
Southern	Primary	Tradewinds Power Corp.	$57,000.00	Build	Options

Bid Award

Contract: FSA26-EQU24.0, Equipment

Group: Roadway Advisory Board: Message Board/Automatic License Plate Reader

Item: 365, Vetted Security Solutions, Vetted XL Message Board Trailer, VH-MSG-XL

Description: Refer FSA Base Specifications PDF document.

Model Upgrade/Downgrade:

Zone	Rank	Vendor	Price	Build File	Options File
Western	Primary	Vetted Security Solutions	$67,393.00	Build	Options
Northern	Primary	Vetted Security Solutions	$67,393.00	Build	Options
Central	Primary	Vetted Security Solutions	$67,393.00	Build	Options
Southern	Primary	Vetted Security Solutions	$67,393.00	Build	Options

Bid Award

Contract: FSA26-EQU24.0, Equipment

Group: Roadway Advisory Board: Mobile Message Board

Item: 366, American Signal Company, CMS-GP465T, CMS-GP465T

Description: Refer FSA Base Specifications PDF document.

Model Upgrade/Downgrade:

Zone	Rank	Vendor	Price	Build File	Options File
Western	Primary	American Signal Company	$15,998.00	Build	Options
Northern	Primary	American Signal Company	$15,998.00	Build	Options
Central	Primary	American Signal Company	$16,200.00	Build	Options
Southern	Primary	American Signal Company	$16,352.00	Build	Options

Bid Award

Contract: FSA26-EQU24.0, Equipment

Group: Roadway Advisory Board: Mobile Message Board

Item: 367, K&K Systems, MB9757, MB9757

Description: Refer FSA Base Specifications PDF document.

Model Upgrade/Downgrade:

Zone	Rank	Vendor	Price	Build File	Options File
Western	Primary	K&K Systems, Inc.	$14,997.00	Build	Options
Northern	Primary	K&K Systems, Inc.	$14,997.00	Build	Options
Central	Primary	K&K Systems, Inc.	$14,997.00	Build	Options
Southern	Primary	K&K Systems, Inc.	$14,997.00	Build	Options

Bid Award

Contract: FSA26-EQU24.0, Equipment

Group: Roadway Advisory Board: Mobile Message Board

Item: 368, Kustom Signal, Smart VMS, 2

Description: Refer FSA Base Specifications PDF document.

Model Upgrade/Downgrade:

Zone	Rank	Vendor	Price	Build File	Options File
Western	Primary	Kustom Signals, Inc.	$21,199.00	Build	Options
Northern	Primary	Kustom Signals, Inc.	$21,199.00	Build	Options
Central	Primary	Kustom Signals, Inc.	$21,199.00	Build	Options
Southern	Primary	Kustom Signals, Inc.	$21,199.00	Build	Options

Bid Award

Contract: FSA26-EQU24.0, Equipment

Group: Roadway Advisory Board: Mobile Message Board

Item: 369, Ver-Mac, PCMS-1500, PCMS-1500

Description: Refer FSA Base Specifications PDF document.

Model Upgrade/Downgrade:

Zone	Rank	Vendor	Price	Build File	Options File
Western	Primary	Federal Contracts LLC DBA Federal Contracts Company	$21,205.00	Build	Options
Northern	Primary	Federal Contracts LLC DBA Federal Contracts Company	$21,205.00	Build	Options
Central	Primary	Federal Contracts LLC DBA Federal Contracts Company	$21,205.00	Build	Options
Southern	Primary	Federal Contracts LLC DBA Federal Contracts Company	$21,205.00	Build	Options

Bid Award

Contract: FSA26-EQU24.0, Equipment

Group: Roadway Advisory Board: Mobile Message Board

Item: 370, Wanco, Full Size 3-Line Message Board Trailer, WTLMB-A

Description: Refer FSA Base Specifications PDF document.

Model Upgrade/Downgrade:

Zone	Rank	Vendor	Price	Build File	Options File
Western	Primary	Aramsco Inc	$20,750.00	Build	Options
	Alternate	Vetted Security Solutions	$20,900.00	Build	Options
	Alternate	Croc Enterprises LLC	$22,338.00	Build	Options
Northern	Primary	Aramsco Inc	$20,750.00	Build	Options
	Alternate	Vetted Security Solutions	$20,900.00	Build	Options
	Alternate	Croc Enterprises LLC	$22,338.00	Build	Options
Central	Primary	Aramsco Inc	$20,750.00	Build	Options
	Alternate	Vetted Security Solutions	$20,900.00	Build	Options
	Alternate	Croc Enterprises LLC	$22,338.00	Build	Options
Southern	Primary	Aramsco Inc	$20,750.00	Build	Options
	Alternate	Vetted Security Solutions	$20,900.00	Build	Options
	Alternate	Croc Enterprises LLC	$22,750.00	Build	Options

Bid Award

Contract: FSA26-EQU24.0, Equipment

Group: Roadway Advisory Board: Mobile Message Board

Item: 371, Wanco, Full Size Full Matrix Message Board Trailer, WTMMB-A

Description: Refer FSA Base Specifications PDF document.

Model Upgrade/Downgrade:

Zone	Rank	Vendor	Price	Build File	Options File
Western	Primary	Aramsco Inc	$21,800.00	Build	Options
	Alternate	Vetted Security Solutions	$21,900.00	Build	Options
	Alternate	Croc Enterprises LLC	$23,238.00	Build	Options
Northern	Primary	Aramsco Inc	$21,800.00	Build	Options
	Alternate	Vetted Security Solutions	$21,900.00	Build	Options
	Alternate	Croc Enterprises LLC	$23,238.00	Build	Options
Central	Primary	Aramsco Inc	$21,800.00	Build	Options
	Alternate	Vetted Security Solutions	$21,900.00	Build	Options
	Alternate	Croc Enterprises LLC	$23,238.00	Build	Options
Southern	Primary	Aramsco Inc	$21,800.00	Build	Options
	Alternate	Vetted Security Solutions	$21,900.00	Build	Options
	Alternate	Croc Enterprises LLC	$23,750.00	Build	Options

Bid Award

Contract: FSA26-EQU24.0, Equipment

Group: Roadway Advisory Board: Mobile Speed Board

Item: 372, All Traffic Solutions, INC, Shield 12 - with ATS-3 Trailer - No Cloud, 4001809FSA

Description: Refer FSA Base Specifications PDF document.

Model Upgrade/Downgrade:

Zone	Rank	Vendor	Price	Build File	Options File
Western	Primary	All Traffic Solutions, LLC (A TAPCO Brand)	$9,563.00	Build	Options
Northern	Primary	All Traffic Solutions, LLC (A TAPCO Brand)	$9,563.00	Build	Options
Central	Primary	All Traffic Solutions, LLC (A TAPCO Brand)	$9,563.00	Build	Options
Southern	Primary	All Traffic Solutions, LLC (A TAPCO Brand)	$9,563.00	Build	Options

Bid Award

Contract: FSA26-EQU24.0, Equipment

Group: Roadway Advisory Board: Mobile Speed Board

Item: 373, All Traffic Solutions, INC, SpeedAlert 18 - With ATS-3 Trailer - No Cloud, 4001811FSA

Description: Refer FSA Base Specifications PDF document.

Model Upgrade/Downgrade:

Zone	Rank	Vendor	Price	Build File	Options File
Western	Primary	All Traffic Solutions, LLC (A TAPCO Brand)	$11,090.00	Build	Options
Northern	Primary	All Traffic Solutions, LLC (A TAPCO Brand)	$11,090.00	Build	Options
Central	Primary	All Traffic Solutions, LLC (A TAPCO Brand)	$11,090.00	Build	Options
Southern	Primary	All Traffic Solutions, LLC (A TAPCO Brand)	$11,090.00	Build	Options

Bid Award

Contract: FSA26-EQU24.0, Equipment

Group: Roadway Advisory Board: Mobile Speed Board

Item: 374, K&K Systems, LT-ER12, LT-ER12

Description: Refer FSA Base Specifications PDF document.

Model Upgrade/Downgrade:

Zone	Rank	Vendor	Price	Build File	Options File
Western	Primary	K&K Systems, Inc.	$5,628.00	Build	Options
Northern	Primary	K&K Systems, Inc.	$5,628.00	Build	Options
Central	Primary	K&K Systems, Inc.	$5,628.00	Build	Options
Southern	Primary	K&K Systems, Inc.	$5,628.00	Build	Options

Bid Award

Contract: FSA26-EQU24.0, Equipment

Group: Roadway Advisory Board: Mobile Speed Board

Item: 375, Kustom Signal, Smart, 12

Description: Refer FSA Base Specifications PDF document.

Model Upgrade/Downgrade:

Zone	Rank	Vendor	Price	Build File	Options File
Western	Primary	Kustom Signals, Inc.	$6,624.00	Build	Options
Northern	Primary	Kustom Signals, Inc.	$6,624.00	Build	Options
Central	Primary	Kustom Signals, Inc.	$6,624.00	Build	Options
Southern	Primary	Kustom Signals, Inc.	$6,624.00	Build	Options

Bid Award

Contract: FSA26-EQU24.0, Equipment

Group: Roadway Advisory Board: Mobile Speed Board

Item: 376, Ver-Mac, SP-710V, SP-710V

Description: Refer FSA Base Specifications PDF document.

Model Upgrade/Downgrade:

Zone	Rank	Vendor	Price	Build File	Options File
Western	Primary	Federal Contracts LLC DBA Federal Contracts Company	$10,449.00	Build	Options
Northern	Primary	Federal Contracts LLC DBA Federal Contracts Company	$10,449.00	Build	Options
Central	Primary	Federal Contracts LLC DBA Federal Contracts Company	$10,449.00	Build	Options
Southern	Primary	Federal Contracts LLC DBA Federal Contracts Company	$10,449.00	Build	Options

Bid Award

Contract: FSA26-EQU24.0, Equipment

Group: Roadway Advisory Board: Mobile Speed Board

Item: 377, Wanco, Compact Radar Speed Trailer, WSDT3-S

Description: Refer FSA Base Specifications PDF document.

Model Upgrade/Downgrade:

Zone	Rank	Vendor	Price	Build File	Options File
Western	Primary	Aramsco Inc	$10,250.00	Build	Options
	Alternate	Vetted Security Solutions	$13,250.00	Build	Options
	Alternate	Jet-Vac Equipment Company, LLC	$15,431.00	Build	Options
Northern	Primary	Aramsco Inc	$10,250.00	Build	Options
	Alternate	Vetted Security Solutions	$13,250.00	Build	Options
	Alternate	Jet-Vac Equipment Company, LLC	$15,431.00	Build	Options
Central	Primary	Aramsco Inc	$10,250.00	Build	Options
	Alternate	Vetted Security Solutions	$13,250.00	Build	Options
	Alternate	Jet-Vac Equipment Company, LLC	$15,431.00	Build	Options
Southern	Primary	Aramsco Inc	$10,250.00	Build	Options
	Alternate	Vetted Security Solutions	$13,250.00	Build	Options
	Alternate	Jet-Vac Equipment Company, LLC	$15,431.00	Build	Options

Bid Award

Contract: FSA26-EQU24.0, Equipment

Group: Roadway Advisory Board: Mobile Speed Board/Automatic License Plate Reader

Item: 378, Vetted Security Solutions, ALPR Speed Trailer-STANDARD, VH-SPD-STD

Description: Refer FSA Base Specifications PDF document.

Model Upgrade/Downgrade:

Zone	Rank	Vendor	Price	Build File	Options File
Western	Primary	Vetted Security Solutions	$34,757.00	Build	Options
Northern	Primary	Vetted Security Solutions	$34,757.00	Build	Options
Central	Primary	Vetted Security Solutions	$34,757.00	Build	Options
Southern	Primary	Vetted Security Solutions	$34,757.00	Build	Options

Bid Award

Contract: FSA26-EQU24.0, Equipment

Group: Roadway Advisory Board: Mobile Traffic Advisory/Directional Signal Board

Item: 379, K&K Systems, AT154896, AT154896

Description: Refer FSA Base Specifications PDF document.

Model Upgrade/Downgrade:

Zone	Rank	Vendor	Price	Build File	Options File
Western	Primary	K&K Systems, Inc.	$4,756.00	Build	Options
Northern	Primary	K&K Systems, Inc.	$4,756.00	Build	Options
Central	Primary	K&K Systems, Inc.	$4,756.00	Build	Options
Southern	Primary	K&K Systems, Inc.	$4,756.00	Build	Options

Bid Award

Contract: FSA26-EQU24.0, Equipment

Group: Roadway Advisory Board: Mobile Traffic Advisory/Directional Signal Board

Item: 380, Traffix Device, Scorpion II Trailer Attenuator with Mobile Traffic Advisory / Directional Signal Board, 10002-TL3M-12TA

Description: Refer FSA Base Specifications PDF document.

Model Upgrade/Downgrade:

Zone	Rank	Vendor	Price	Build File	Options File
Western	Primary	Aramsco Inc	$34,850.00	Build	Options
	Alternate	Croc Enterprises LLC	$43,413.00	Build	Options
Northern	Primary	Aramsco Inc	$34,850.00	Build	Options
	Alternate	Croc Enterprises LLC	$43,413.00	Build	Options
Central	Primary	Aramsco Inc	$34,850.00	Build	Options
	Alternate	Croc Enterprises LLC	$43,413.00	Build	Options
Southern	Primary	Aramsco Inc	$34,850.00	Build	Options
	Alternate	Croc Enterprises LLC	$44,000.00	Build	Options

Bid Award

Contract: FSA26-EQU24.0, Equipment

Group: Roadway Advisory Board: Mobile Traffic Advisory/Directional Signal Board

Item: 381, Ver-Mac, ST-4825, ST-4825

Description: Refer FSA Base Specifications PDF document.

Model Upgrade/Downgrade:

Zone	Rank	Vendor	Price	Build File	Options File
Western	Primary	Federal Contracts LLC DBA Federal Contracts Company	$7,106.00	Build	Options
Northern	Primary	Federal Contracts LLC DBA Federal Contracts Company	$7,106.00	Build	Options
Central	Primary	Federal Contracts LLC DBA Federal Contracts Company	$7,106.00	Build	Options
Southern	Primary	Federal Contracts LLC DBA Federal Contracts Company	$7,106.00	Build	Options

Bid Award

Contract: FSA26-EQU24.0, Equipment

Group: Roadway Advisory Board: Mobile Traffic Advisory/Directional Signal Board

Item: 382, Wanco, Metro Matrix Message Board Trailer, WVTMM-L

Description: Refer FSA Base Specifications PDF document.

Model Upgrade/Downgrade:

Zone	Rank	Vendor	Price	Build File	Options File
Western	Primary	Vetted Security Solutions	$18,000.00	Build	Options
	Alternate	Aramsco Inc	$18,250.00	Build	Options
	Alternate	Croc Enterprises LLC	$19,584.00	Build	Options
Northern	Primary	Vetted Security Solutions	$18,000.00	Build	Options
	Alternate	Aramsco Inc	$18,250.00	Build	Options
	Alternate	Croc Enterprises LLC	$19,584.00	Build	Options
Central	Primary	Vetted Security Solutions	$18,000.00	Build	Options
	Alternate	Aramsco Inc	$18,250.00	Build	Options
	Alternate	Croc Enterprises LLC	$19,584.00	Build	Options
Southern	Primary	Vetted Security Solutions	$18,000.00	Build	Options
	Alternate	Aramsco Inc	$18,250.00	Build	Options
	Alternate	Croc Enterprises LLC	$20,125.00	Build	Options

Bid Award

Contract: FSA26-EQU24.0, Equipment

Group: Roadway Advisory Board: Mobile Traffic Advisory/Directional Signal Board

Item: 383, Wanco, WECO Arrow Board Trailer, WTSP55-LSA

Description: Refer FSA Base Specifications PDF document.

Model Upgrade/Downgrade:

Zone	Rank	Vendor	Price	Build File	Options File
Western	Primary	Aramsco Inc	$5,950.00	Build	Options
	Alternate	Vetted Security Solutions	$6,350.00	Build	Options
	Alternate	Croc Enterprises LLC	$6,588.00	Build	Options
Northern	Primary	Aramsco Inc	$5,950.00	Build	Options
	Alternate	Vetted Security Solutions	$6,350.00	Build	Options
	Alternate	Croc Enterprises LLC	$6,588.00	Build	Options
Central	Primary	Aramsco Inc	$5,950.00	Build	Options
	Alternate	Vetted Security Solutions	$6,350.00	Build	Options
	Alternate	Croc Enterprises LLC	$6,588.00	Build	Options
Southern	Primary	Aramsco Inc	$5,950.00	Build	Options
	Alternate	Vetted Security Solutions	$6,350.00	Build	Options
	Alternate	Jet-Vac Equipment Company, LLC	$6,763.00	Build	Options

Bid Award

Contract: FSA26-EQU24.0, Equipment

Group: Roller: Compact 2,900 lbs. - Double Drum Roller - 38in. Width

Item: 384, BASIC Equipment, Split Drum Vibratory Roller, 120V

Description: Refer FSA Base Specifications PDF document.

Model Upgrade/Downgrade:

Zone	Rank	Vendor	Price	Build File	Options File
Western	Primary	BASIC Equipment	$48,100.00	Build	Options
Northern	Primary	BASIC Equipment	$48,100.00	Build	Options
Central	Primary	BASIC Equipment	$48,500.00	Build	Options
Southern	Primary	BASIC Equipment	$49,200.00	Build	Options

Bid Award

Contract: FSA26-EQU24.0, Equipment

Group: Roller: Compact 2,900 lbs. - Double Drum Roller - 38in. Width

Item: 660, Caterpillar, CB1.8, CB1.8

Description: Refer FSA Base Specifications PDF document.

Model Upgrade/Downgrade:

Zone	Rank	Vendor	Price	Build File	Options File
Western	Primary	Ring Power Corporation	$44,363.00	Build	Options
Northern	Primary	Ring Power Corporation	$44,363.00	Build	Options
Central	Primary	Ring Power Corporation	$44,363.00	Build	Options
Southern	Primary	Kelly Tractor Co	$40,795.00	Build	Options

Bid Award

Contract: FSA26-EQU24.0, Equipment

Group: Roller: Compact, Pneumatic Asphalt Roller

Item: 385, BASIC Equipment, Pneumatic Asphalt Roller, 700

Description: Refer FSA Base Specifications PDF document.

Model Upgrade/Downgrade:

Zone	Rank	Vendor	Price	Build File	Options File
Western	Primary	BASIC Equipment	$67,800.00	Build	
Northern	Primary	BASIC Equipment	$67,800.00	Build	
Central	Primary	BASIC Equipment	$68,000.00	Build	
Southern	Primary	BASIC Equipment	$68,300.00	Build	

Bid Award

Contract: FSA26-EQU24.0, Equipment

Group: Roller: Compact, Pneumatic Asphalt Roller

Item: 661, Weiler, CT3A, CT3A

Description: Refer FSA Base Specifications PDF document.

Model Upgrade/Downgrade:

Zone	Rank	Vendor	Price	Build File	Options File
Western	Primary	Ring Power Corporation	$86,011.00	Build	Options
Northern	Primary	Ring Power Corporation	$86,011.00	Build	Options
Central	Primary	Ring Power Corporation	$86,011.00	Build	Options
Southern	Primary	Kelly Tractor Co	$82,000.00	Build	Options

Bid Award

Contract: FSA26-EQU24.0, Equipment

Group: Roller: Compaction Roller 15,000 lbs. - Single Drum

Item: 388, Caterpillar, CS7, CS7

Description: Refer FSA Base Specifications PDF document.

Model Upgrade/Downgrade:

Zone	Rank	Vendor	Price	Build File	Options File
Western	Primary	Ring Power Corporation	$145,217.00	Build	Options
Northern	Primary	Ring Power Corporation	$145,217.00	Build	Options
Central	Primary	Ring Power Corporation	$145,217.00	Build	Options
Southern	Primary	Kelly Tractor Co	$139,880.00	Build	Options

Bid Award

Contract: FSA26-EQU24.0, Equipment

Group: Roller: Compaction Roller 15,000 lbs. - Single Drum

Item: 389, Hamm, HC70i Single Drum Vibratory Roller, HC70i

Description: Refer FSA Base Specifications PDF document.

Model Upgrade/Downgrade:

Zone	Rank	Vendor	Price	Build File	Options File
Western	Primary	Dobbs Equipment, LLC	$142,475.00	Build	Options
Northern	Primary	Dobbs Equipment, LLC	$142,475.00	Build	Options
Central	Primary	Dobbs Equipment, LLC	$142,475.00	Build	Options
Southern	Primary	Dobbs Equipment, LLC	$142,475.00	Build	Options

Bid Award

Contract: FSA26-EQU24.0, Equipment

Group: Roller: Compaction Roller 15,000 lbs. - Single Drum

Item: 391, Sakai, SV414D, SV414D

Description: Refer FSA Base Specifications PDF document.

Model Upgrade/Downgrade:

Zone	Rank	Vendor	Price	Build File	Options File
Western	Primary	GREAT SOUTHERN EQUIPMENT, LLC	$131,724.00	Build	Options
Northern	Primary	GREAT SOUTHERN EQUIPMENT, LLC	$131,724.00	Build	Options
Central	Primary	GREAT SOUTHERN EQUIPMENT, LLC	$131,724.00	Build	Options
Southern	Primary	GREAT SOUTHERN EQUIPMENT, LLC	$131,724.00	Build	Options

Bid Award

Contract: FSA26-EQU24.0, Equipment

Group: Roller: Compaction Roller 15,000 lbs. - Single Drum

Item: 393, Volvo, SD75, SD75

Description: Refer FSA Base Specifications PDF document.

Model Upgrade/Downgrade:

Zone	Rank	Vendor	Price	Build File	Options File
Western	Primary	Cowin Equipment Company	$116,563.00	Build	Options
Northern	Primary	Alta Construction Equipment Florida, LLC	$116,000.00	Build	Options
Central	Primary	Alta Construction Equipment Florida, LLC	$116,000.00	Build	Options
Southern	Primary	Alta Construction Equipment Florida, LLC	$116,000.00	Build	Options

Bid Award

Contract: FSA26-EQU24.0, Equipment

Group: Roller: Large 22,000 lbs. - Double Drum Roller - 70in. Width

Item: 396, Caterpillar, CB13, CB13

Description: Refer FSA Base Specifications PDF document.

Model Upgrade/Downgrade:

Zone	Rank	Vendor	Price	Build File	Options File
Western	Primary	Ring Power Corporation	$213,162.00	Build	Options
Northern	Primary	Ring Power Corporation	$213,162.00	Build	Options
Central	Primary	Ring Power Corporation	$213,162.00	Build	Options
Southern	Primary	Kelly Tractor Co	$198,540.00	Build	Options

Bid Award

Contract: FSA26-EQU24.0, Equipment

Group: Roller: Large 22,000 lbs. - Double Drum Roller - 70in. Width

Item: 398, Hamm, HD+90iVV, HD+90iVV

Description: Refer FSA Base Specifications PDF document.

Model Upgrade/Downgrade:

Zone	Rank	Vendor	Price	Build File	Options File
Western	Primary	Dobbs Equipment, LLC	$212,675.00	Build	Options
Northern	Primary	Dobbs Equipment, LLC	$212,675.00	Build	Options
Central	Primary	Dobbs Equipment, LLC	$212,675.00	Build	Options
Southern	Primary	Dobbs Equipment, LLC	$212,675.00	Build	Options

Bid Award

Contract: FSA26-EQU24.0, Equipment

Group: Roller: Large 22,000 lbs. - Double Drum Roller - 70in. Width

Item: 399, Sakai, SW884, SW884

Description: Refer FSA Base Specifications PDF document.

Model Upgrade/Downgrade:

Zone	Rank	Vendor	Price	Build File	Options File
Western	Primary	GREAT SOUTHERN EQUIPMENT, LLC	$212,415.00	Build	Options
Northern	Primary	GREAT SOUTHERN EQUIPMENT, LLC	$212,415.00	Build	Options
Central	Primary	GREAT SOUTHERN EQUIPMENT, LLC	$212,415.00	Build	Options
Southern	Primary	GREAT SOUTHERN EQUIPMENT, LLC	$212,415.00	Build	Options

Bid Award

Contract: FSA26-EQU24.0, Equipment

Group: Roller: Large 22,000 lbs. - Double Drum Roller - 70in. Width

Item: 400, Volvo, DD120, DD120

Description: Refer FSA Base Specifications PDF document.

Model Upgrade/Downgrade:

Zone	Rank	Vendor	Price	Build File	Options File
Western	Primary	Cowin Equipment Company	$177,402.00	Build	Options
Northern	Primary	Alta Construction Equipment Florida, LLC	$177,000.00	Build	Options
Central	Primary	Alta Construction Equipment Florida, LLC	$177,000.00	Build	Options
Southern	Primary	Alta Construction Equipment Florida, LLC	$177,000.00	Build	Options

Bid Award

Contract: FSA26-EQU24.0, Equipment

Group: Roller: Small 5,400 lbs. - Double Drum Roller - 47in. Width

Item: 403, Caterpillar, CB2.7, CB2.7

Description: Refer FSA Base Specifications PDF document.

Model Upgrade/Downgrade:

Zone	Rank	Vendor	Price	Build File	Options File
Western	Primary	Ring Power Corporation	$71,530.00	Build	Options
Northern	Primary	Ring Power Corporation	$71,530.00	Build	Options
Central	Primary	Ring Power Corporation	$71,530.00	Build	Options
Southern	Primary	Kelly Tractor Co	$63,980.00	Build	Options

Bid Award

Contract: FSA26-EQU24.0, Equipment

Group: Roller: Small 5,400 lbs. - Double Drum Roller - 47in. Width

Item: 405, Hamm, HD12-VV, HD12-VV

Description: Refer FSA Base Specifications PDF document.

Model Upgrade/Downgrade:

Zone	Rank	Vendor	Price	Build File	Options File
Western	Primary	Dobbs Equipment, LLC	$65,495.00	Build	Options
Northern	Primary	Dobbs Equipment, LLC	$65,495.00	Build	Options
Central	Primary	Dobbs Equipment, LLC	$65,495.00	Build	Options
Southern	Primary	Dobbs Equipment, LLC	$65,495.00	Build	Options

Bid Award

Contract: FSA26-EQU24.0, Equipment

Group: Roller: Small 5,400 lbs. - Double Drum Roller - 47in. Width

Item: 406, Volvo, DD25, DD25

Description: Refer FSA Base Specifications PDF document.

Model Upgrade/Downgrade:

Zone	Rank	Vendor	Price	Build File	Options File
Western	Primary	Cowin Equipment Company	$50,452.00	Build	Options
Northern	Primary	Alta Construction Equipment Florida, LLC	$52,000.00	Build	Options
Central	Primary	Alta Construction Equipment Florida, LLC	$52,000.00	Build	Options
Southern	Primary	Alta Construction Equipment Florida, LLC	$52,000.00	Build	Options

Bid Award

Contract: FSA26-EQU24.0, Equipment

Group: Security Camera: Security Camera Tower - Trailer Mounted

Item: 407, American Signal Company, Zone Watch - T15 Mobile CCTV Trailer, AMS40102157

Description: Refer FSA Base Specifications PDF document.

Model Upgrade/Downgrade:

Zone	Rank	Vendor	Price	Build File	Options File
Western	Primary	American Signal Company	$26,765.00	Build	Options
Northern	Primary	American Signal Company	$26,765.00	Build	Options
Central	Primary	American Signal Company	$26,967.00	Build	Options
Southern	Primary	American Signal Company	$27,119.00	Build	Options

Bid Award

Contract: FSA26-EQU24.0, Equipment

Group: Security Camera: Security Camera Tower - Trailer Mounted

Item: 408, OMJC Signal, Security Camera Trailer, OWL

Description: Refer FSA Base Specifications PDF document.

Model Upgrade/Downgrade:

Zone	Rank	Vendor	Price	Build File	Options File
Western	Primary	OMJC Signal Inc	$33,285.00	Build	Options
Northern	Primary	OMJC Signal Inc	$33,285.00	Build	Options
Central	Primary	OMJC Signal Inc	$33,285.00	Build	Options
Southern	Primary	OMJC Signal Inc	$33,285.00	Build	Options

Bid Award

Contract: FSA26-EQU24.0, Equipment

Group: Security Camera: Security Camera Tower - Trailer Mounted

Item: 409, Vetted Security Solutions, Vetted Long Run Surveillance Trailer, VH-SURV-LR-1600W

Description: Refer FSA Base Specifications PDF document.

Model Upgrade/Downgrade:

Zone	Rank	Vendor	Price	Build File	Options File
Western	Primary	Vetted Security Solutions	$53,928.00	Build	Options
Northern	Primary	Vetted Security Solutions	$53,928.00	Build	Options
Central	Primary	Vetted Security Solutions	$53,928.00	Build	Options
Southern	Primary	Vetted Security Solutions	$53,928.00	Build	Options

Bid Award

Contract: FSA26-EQU24.0, Equipment

Group: Security Camera: Security Camera Tower - Trailer Mounted

Item: 662, Ver-Mac, CT-2430, CT-2430

Description: Refer FSA Base Specifications PDF document.

Model Upgrade/Downgrade:

Zone	Rank	Vendor	Price	Build File	Options File
Western	Primary	Federal Contracts LLC DBA Federal Contracts Company	$23,287.00	Build	Options
Northern	Primary	Federal Contracts LLC DBA Federal Contracts Company	$23,287.00	Build	Options
Central	Primary	Federal Contracts LLC DBA Federal Contracts Company	$23,287.00	Build	Options
Southern	Primary	Federal Contracts LLC DBA Federal Contracts Company	$23,287.00	Build	Options

Bid Award

Contract: FSA26-EQU24.0, Equipment

Group: Sewer Cleaner: Combination Sewer Cleaning/Vacuum Machine Body - 10 cubic yd.

Item: 410, Aquatech, B-10, B-10

Description: Refer FSA Base Specifications PDF document.

Model Upgrade/Downgrade:

Zone	Rank	Vendor	Price	Build File	Options File
Western	Primary	Pat`s Pump & Blower	$389,000.00	Build	Options
Northern	Primary	Pat`s Pump & Blower	$389,000.00	Build	Options
Central	Primary	Pat`s Pump & Blower	$389,000.00	Build	Options
Southern	Primary	Pat`s Pump & Blower	$389,000.00	Build	Options

Bid Award

Contract: FSA26-EQU24.0, Equipment

Group: Sewer Cleaner: Combination Sewer Cleaning/Vacuum Machine Body - 10 cubic yd.

Item: 411, Gapvax, MC, 1510

Description: Refer FSA Base Specifications PDF document.

Model Upgrade/Downgrade:

Zone	Rank	Vendor	Price	Build File	Options File
Western	Primary	Evervac Equipment	$371,120.00	Build	Options
Northern	Primary	Evervac Equipment	$371,120.00	Build	Options
Central	Primary	Evervac Equipment	$371,120.00	Build	Options
Southern	Primary	Evervac Equipment	$371,120.00	Build	Options

Bid Award

Contract: FSA26-EQU24.0, Equipment

Group: Sewer Cleaner: Combination Sewer Cleaning/Vacuum Machine Body - 10 cubic yd.

Item: 412, PipeHunter, VacHunter Combo, 101035 PH8C

Description: Refer FSA Base Specifications PDF document.

Model Upgrade/Downgrade:

Zone	Rank	Vendor	Price	Build File	Options File
Western	Primary	Texas Underground	$355,000.00	Build	Options
Northern	Primary	Texas Underground	$355,000.00	Build	Options
Central	Primary	Texas Underground	$355,000.00	Build	Options
Southern	Primary	Texas Underground	$355,000.00	Build	Options

Bid Award

Contract: FSA26-EQU24.0, Equipment

Group: Sewer Cleaner: Combination Sewer Cleaning/Vacuum Machine Body - 10 cubic yd.

Item: 413, Sewer Equipment, 900 ECO-12YD, 900 ECO-12YD

Description: Refer FSA Base Specifications PDF document.

Model Upgrade/Downgrade:

Zone	Rank	Vendor	Price	Build File	Options File
Western	Primary	Jet-Vac Equipment Company, LLC	$390,132.00	Build	Options
Northern	Primary	Jet-Vac Equipment Company, LLC	$390,132.00	Build	Options
Central	Primary	Jet-Vac Equipment Company, LLC	$390,132.00	Build	Options
Southern	Primary	Jet-Vac Equipment Company, LLC	$390,132.00	Build	Options

Bid Award

Contract: FSA26-EQU24.0, Equipment

Group: Sewer Cleaner: Combination Sewer Cleaning/Vacuum Machine Body - 10 cubic yd.

Item: 414, Super Products, Camel Max, 1200

Description: Refer FSA Base Specifications PDF document.

Model Upgrade/Downgrade:

Zone	Rank	Vendor	Price	Build File	Options File
Western	Primary	Container Systems & Equipment Co., Inc.	$386,809.00	Build	Options
Northern	Primary	Container Systems & Equipment Co., Inc.	$386,809.00	Build	Options
Central	Primary	Container Systems & Equipment Co., Inc.	$386,809.00	Build	Options
Southern	Primary	Container Systems & Equipment Co., Inc.	$386,809.00	Build	Options

Bid Award

Contract: FSA26-EQU24.0, Equipment

Group: Sewer Cleaner: Combination Sewer Cleaning/Vacuum Machine Body - 10 cubic yd.

Item: 415, Vacall, AJV1010, AJV1010

Description: Refer FSA Base Specifications PDF document.

Model Upgrade/Downgrade:

Zone	Rank	Vendor	Price	Build File	Options File
Western	Primary	GREAT SOUTHERN EQUIPMENT, LLC	$357,269.00	Build	Options
Northern	Primary	GREAT SOUTHERN EQUIPMENT, LLC	$357,269.00	Build	Options
Central	Primary	GREAT SOUTHERN EQUIPMENT, LLC	$357,269.00	Build	Options
Southern	Primary	GREAT SOUTHERN EQUIPMENT, LLC	$357,269.00	Build	Options

Bid Award

Contract: FSA26-EQU24.0, Equipment

Group: Sewer Cleaner: Combination Sewer Cleaning/Vacuum Machine Body - 10 cubic yd.

Item: 416, Vac-Con, V310N/1000, V310N/1000

Description: Refer FSA Base Specifications PDF document.

Model Upgrade/Downgrade:

Zone	Rank	Vendor	Price	Build File	Options File
Western	Primary	Southern Sewer Equipment Sales	$323,092.00	Build	Options
Northern	Primary	Southern Sewer Equipment Sales	$323,092.00	Build	Options
Central	Primary	Southern Sewer Equipment Sales	$323,092.00	Build	Options
Southern	Primary	Southern Sewer Equipment Sales	$323,092.00	Build	Options

Bid Award

Contract: FSA26-EQU24.0, Equipment

Group: Sewer Cleaner: Combination Sewer Cleaning/Vacuum Machine Body - 10 cubic yd.

Item: 417, Vac-Con, VPD4210SA/1000, VPD4210SA/1000

Description: Refer FSA Base Specifications PDF document.

Model Upgrade/Downgrade:

Zone	Rank	Vendor	Price	Build File	Options File
Western	Primary	Southern Sewer Equipment Sales	$383,042.00	Build	Options
Northern	Primary	Southern Sewer Equipment Sales	$383,042.00	Build	Options
Central	Primary	Southern Sewer Equipment Sales	$383,042.00	Build	Options
Southern	Primary	Southern Sewer Equipment Sales	$383,042.00	Build	Options

Bid Award

Contract: FSA26-EQU24.0, Equipment

Group: Sewer Cleaner: Combination Sewer Cleaning/Vacuum Machine Body - 10 cubic yd.

Item: 418, Vactor, 2100l, 2100l

Description: Refer FSA Base Specifications PDF document.

Model Upgrade/Downgrade:

Zone	Rank	Vendor	Price	Build File	Options File
Western	Primary	Environmental Products Group	$360,314.00	Build	Options
Northern	Primary	Environmental Products Group	$360,314.00	Build	Options
Central	Primary	Environmental Products Group	$360,314.00	Build	Options
Southern	Primary	Environmental Products Group	$360,314.00	Build	Options

Bid Award

Contract: FSA26-EQU24.0, Equipment

Group: Sewer Cleaner: Easement Machine

Item: 419, Prowler Equipment, Extendable Track Easement Machine, PR-ET

Description: Refer FSA Base Specifications PDF document.

Model Upgrade/Downgrade:

Zone	Rank	Vendor	Price	Build File	Options File
Western	Primary	Evervac Equipment	$72,000.00	Build	Options
Northern	Primary	Evervac Equipment	$72,000.00	Build	Options
Central	Primary	Evervac Equipment	$72,000.00	Build	Options
Southern	Primary	Evervac Equipment	$72,000.00	Build	Options

Bid Award

Contract: FSA26-EQU24.0, Equipment

Group: Sewer Cleaner: Easement Machine

Item: 663, Vactor, Ace, Ace

Description: Refer FSA Base Specifications PDF document.

Model Upgrade/Downgrade:

Zone	Rank	Vendor	Price	Build File	Options File
Western	Primary	Environmental Products Group	$93,981.00	Build	Options
Northern	Primary	Environmental Products Group	$93,981.00	Build	Options
Central	Primary	Environmental Products Group	$93,981.00	Build	Options
Southern	Primary	Environmental Products Group	$93,981.00	Build	Options

Bid Award

Contract: FSA26-EQU24.0, Equipment

Group: Sewer Cleaner: Trailer Mounted Sewer Cleaner

Item: 423, PipeHunter, 700 Gallon Tandem Trailer Jetter, 3744

Description: Refer FSA Base Specifications PDF document.

Model Upgrade/Downgrade:

Zone	Rank	Vendor	Price	Build File	Options File
Western	Primary	Texas Underground	$85,000.00	Build	Options
Northern	Primary	Texas Underground	$85,000.00	Build	Options
Central	Primary	Texas Underground	$85,000.00	Build	Options
Southern	Primary	Texas Underground	$85,000.00	Build	Options

Bid Award

Contract: FSA26-EQU24.0, Equipment

Group: Sewer Cleaner: Trailer Mounted Sewer Cleaner

Item: 425, Vac-Con, VecJet, VJ750

Description: Refer FSA Base Specifications PDF document.

Model Upgrade/Downgrade:

Zone	Rank	Vendor	Price	Build File	Options File
Western	Primary	Southern Sewer Equipment Sales	$93,754.00	Build	Options
Northern	Primary	Southern Sewer Equipment Sales	$93,754.00	Build	Options
Central	Primary	Southern Sewer Equipment Sales	$93,754.00	Build	Options
Southern	Primary	Southern Sewer Equipment Sales	$93,754.00	Build	Options

Bid Award

Contract: FSA26-EQU24.0, Equipment

Group: Sewer Cleaner: Trailer Mounted Sewer Cleaner

Item: 426, Vactor, RamJet, 4018

Description: Refer FSA Base Specifications PDF document.

Model Upgrade/Downgrade:

Zone	Rank	Vendor	Price	Build File	Options File
Western	Primary	Environmental Products Group	$93,072.00	Build	Options
Northern	Primary	Environmental Products Group	$93,072.00	Build	Options
Central	Primary	Environmental Products Group	$93,072.00	Build	Options
Southern	Primary	Environmental Products Group	$93,072.00	Build	Options

Bid Award

Contract: FSA26-EQU24.0, Equipment

Group: Shop Tools & Equipment

Item: 432, ARI-HETRA, Brake Hub Removal Jack, WS-18-HR

Description: Refer FSA Base Specifications PDF document.

Model Upgrade/Downgrade:

Zone	Rank	Vendor	Price	Build File	Options File
Western	Primary	ARI Phoenix, Inc.	$6,286.00	Build	Options
Northern	Primary	ARI Phoenix, Inc.	$6,286.00	Build	Options
Central	Primary	ARI Phoenix, Inc.	$6,286.00	Build	Options
Southern	Primary	ARI Phoenix, Inc.	$6,286.00	Build	Options

Bid Award

Contract: FSA26-EQU24.0, Equipment

Group: Shop Tools & Equipment

Item: 433, ARI-HETRA, Floor Jack, WS-16124

Description: Refer FSA Base Specifications PDF document.

Model Upgrade/Downgrade:

Zone	Rank	Vendor	Price	Build File	Options File
Western	Primary	ARI Phoenix, Inc.	$4,743.00	Build	Options
Northern	Primary	ARI Phoenix, Inc.	$4,743.00	Build	Options
Central	Primary	ARI Phoenix, Inc.	$4,743.00	Build	Options
Southern	Primary	ARI Phoenix, Inc.	$4,743.00	Build	Options

Bid Award

Contract: FSA26-EQU24.0, Equipment

Group: Shop Tools & Equipment

Item: 434, ARI-HETRA, King Pin Press, WS-KPP143

Description: Refer FSA Base Specifications PDF document.

Model Upgrade/Downgrade:

Zone	Rank	Vendor	Price	Build File	Options File
Western	Primary	ARI Phoenix, Inc.	$10,172.00	Build	Options
Northern	Primary	ARI Phoenix, Inc.	$10,172.00	Build	Options
Central	Primary	ARI Phoenix, Inc.	$10,172.00	Build	Options
Southern	Primary	ARI Phoenix, Inc.	$10,172.00	Build	Options

Bid Award

Contract: FSA26-EQU24.0, Equipment

Group: Shop Tools & Equipment

Item: 435, ARI-HETRA, On Vehicle Brake Lathe, WS-BL44

Description: Refer FSA Base Specifications PDF document.

Model Upgrade/Downgrade:

Zone	Rank	Vendor	Price	Build File	Options File
Western	Primary	ARI Phoenix, Inc.	$25,051.00	Build	Options
Northern	Primary	ARI Phoenix, Inc.	$25,051.00	Build	Options
Central	Primary	ARI Phoenix, Inc.	$25,051.00	Build	Options
Southern	Primary	ARI Phoenix, Inc.	$25,051.00	Build	Options

Bid Award

Contract: FSA26-EQU24.0, Equipment

Group: Shop Tools & Equipment

Item: 436, ARI-HETRA, Tire Changer, WS-12645

Description: Refer FSA Base Specifications PDF document.

Model Upgrade/Downgrade:

Zone	Rank	Vendor	Price	Build File	Options File
Western	Primary	ARI Phoenix, Inc.	$23,257.00	Build	Options
Northern	Primary	ARI Phoenix, Inc.	$23,257.00	Build	Options
Central	Primary	ARI Phoenix, Inc.	$23,257.00	Build	Options
Southern	Primary	ARI Phoenix, Inc.	$23,257.00	Build	Options

Bid Award

Contract: FSA26-EQU24.0, Equipment

Group: Shop Tools & Equipment

Item: 437, ARI-HETRA, Tire Inflation Cage, WS-35026

Description: Refer FSA Base Specifications PDF document.

Model Upgrade/Downgrade:

Zone	Rank	Vendor	Price	Build File	Options File
Western	Primary	ARI Phoenix, Inc.	$8,850.00	Build	Options
Northern	Primary	ARI Phoenix, Inc.	$8,850.00	Build	Options
Central	Primary	ARI Phoenix, Inc.	$8,850.00	Build	Options
Southern	Primary	ARI Phoenix, Inc.	$8,850.00	Build	Options

Bid Award

Contract: FSA26-EQU24.0, Equipment

Group: Shop Tools & Equipment

Item: 438, ARI-HETRA, Wheel Balancer, WS-12890

Description: Refer FSA Base Specifications PDF document.

Model Upgrade/Downgrade:

Zone	Rank	Vendor	Price	Build File	Options File
Western	Primary	ARI Phoenix, Inc.	$14,784.00	Build	Options
Northern	Primary	ARI Phoenix, Inc.	$14,784.00	Build	Options
Central	Primary	ARI Phoenix, Inc.	$14,784.00	Build	Options
Southern	Primary	ARI Phoenix, Inc.	$14,784.00	Build	Options

Bid Award

Contract: FSA26-EQU24.0, Equipment

Group: Shop Tools & Equipment

Item: 439, ARI-HETRA, Wheel Dolly, WS-AH20440

Description: Refer FSA Base Specifications PDF document.

Model Upgrade/Downgrade:

Zone	Rank	Vendor	Price	Build File	Options File
Western	Primary	ARI Phoenix, Inc.	$5,131.00	Build	Options
Northern	Primary	ARI Phoenix, Inc.	$5,131.00	Build	Options
Central	Primary	ARI Phoenix, Inc.	$5,131.00	Build	Options
Southern	Primary	ARI Phoenix, Inc.	$5,131.00	Build	Options

Bid Award

Contract: FSA26-EQU24.0, Equipment

Group: Shop Tools & Equipment

Item: 440, Coats, Maxx 80, Maxx 80

Description: Refer FSA Base Specifications PDF document.

Model Upgrade/Downgrade:

Zone	Rank	Vendor	Price	Build File	Options File
Western	Primary	Federal Contracts LLC DBA Federal Contracts Company	$16,135.00	Build	Options
Northern	Primary	Federal Contracts LLC DBA Federal Contracts Company	$16,135.00	Build	Options
Central	Primary	Federal Contracts LLC DBA Federal Contracts Company	$16,135.00	Build	Options
Southern	Primary	Federal Contracts LLC DBA Federal Contracts Company	$16,135.00	Build	Options

Bid Award

Contract: FSA26-EQU24.0, Equipment

Group: Shop Tools & Equipment

Item: 450, Sullair, 3709B, 3709B

Description: Refer FSA Base Specifications PDF document.

Model Upgrade/Downgrade:

Zone	Rank	Vendor	Price	Build File	Options File
Western	Primary	Ring Power Corporation	$38,617.00	Build	Options
Northern	Primary	Ring Power Corporation	$38,617.00	Build	Options
Central	Primary	Ring Power Corporation	$38,617.00	Build	Options
Southern	Primary	Ring Power Corporation	$38,617.00	Build	Options

Bid Award

Contract: FSA26-EQU24.0, Equipment

Group: Shredder: Mobile Shredder/Grinder

Item: 452, Tana Shark, 440D, 440D

Description: Refer FSA Base Specifications PDF document.

Model Upgrade/Downgrade:

Zone	Rank	Vendor	Price	Build File	Options File
Western	Primary	Humdinger Equipment, Ltd.	$1,202,736.00	Build	Options
Northern	Primary	Humdinger Equipment, Ltd.	$1,202,736.00	Build	Options
Central	Primary	Humdinger Equipment, Ltd.	$1,202,736.00	Build	Options
Southern	Primary	Humdinger Equipment, Ltd.	$1,202,736.00	Build	Options

Bid Award

Contract: FSA26-EQU24.0, Equipment

Group: Simulator System: Equipment Operator Simulator

Item: 453, Caterpillar, Technology - Equipment Simulation, N/A

Description: Refer FSA Base Specifications PDF document.

Model Upgrade/Downgrade:

Zone	Rank	Vendor	Price	Build File	Options File
Western	Primary	Ring Power Corporation	$100,708.00	Build	Options
Northern	Primary	Ring Power Corporation	$100,708.00	Build	Options
Central	Primary	Ring Power Corporation	$100,708.00	Build	Options
Southern	Primary	Kelly Tractor Co	$125,000.00	Build	Options

Bid Award

Contract: FSA26-EQU24.0, Equipment

Group: Solid Waste Material Handler: Wheeled Type

Item: 454, Caterpillar, MH3022, MH3022

Description: Refer FSA Base Specifications PDF document.

Model Upgrade/Downgrade:

Zone	Rank	Vendor	Price	Build File	Options File
Western	Primary	Ring Power Corporation	$399,715.00	Build	Options
Northern	Primary	Ring Power Corporation	$399,715.00	Build	Options
Central	Primary	Ring Power Corporation	$399,715.00	Build	Options
Southern	Primary	Kelly Tractor Co	$349,900.00	Build	Options

Bid Award

Contract: FSA26-EQU24.0, Equipment

Group: Solid Waste Material Handler: Wheeled Type

Item: 455, Hyundai, HW250AMH, HW250AMH

Description: Refer FSA Base Specifications PDF document.

Model Upgrade/Downgrade:

Zone	Rank	Vendor	Price	Build File	Options File
Western	Primary	National Equipment Dealers, LLC	$419,000.00	Build	Options
Northern	Primary	National Equipment Dealers, LLC	$419,000.00	Build	Options
Central	Primary	National Equipment Dealers, LLC	$419,000.00	Build	Options
Southern	Primary	National Equipment Dealers, LLC	$419,000.00	Build	Options

Bid Award

Contract: FSA26-EQU24.0, Equipment

Group: Solid Waste Material Handler: Wheeled Type

Item: 456, Liebherr, LH26M, LH26M

Description: Refer FSA Base Specifications PDF document.

Model Upgrade/Downgrade:

Zone	Rank	Vendor	Price	Build File	Options File
Western	Primary	GREAT SOUTHERN EQUIPMENT, LLC	$505,674.00	Build	Options
Northern	Primary	GREAT SOUTHERN EQUIPMENT, LLC	$505,674.00	Build	Options
Central	Primary	GREAT SOUTHERN EQUIPMENT, LLC	$505,674.00	Build	Options
Southern	Primary	GREAT SOUTHERN EQUIPMENT, LLC	$505,674.00	Build	Options

Bid Award

Contract: FSA26-EQU24.0, Equipment

Group: Solid Waste Material Handler: Wheeled Type

Item: 457, Volvo, EW240, EW240

Description: Refer FSA Base Specifications PDF document.

Model Upgrade/Downgrade:

Zone	Rank	Vendor	Price	Build File	Options File
Western	Primary	Cowin Equipment Company	$484,041.00	Build	Options
Northern	Primary	Alta Construction Equipment Florida, LLC	$485,000.00	Build	Options
Central	Primary	Alta Construction Equipment Florida, LLC	$485,000.00	Build	Options
Southern	Primary	Alta Construction Equipment Florida, LLC	$485,000.00	Build	Options

Bid Award

Contract: FSA26-EQU24.0, Equipment

Group: Stump Cutter

Item: 458, Bandit, 2550, 2550

Description: Refer FSA Base Specifications PDF document.

Model Upgrade/Downgrade:

Zone	Rank	Vendor	Price	Build File	Options File
Western					
Northern					
Central					
Southern	Primary	Alta Construction Equipment Florida, LLC	$56,000.00	Build	Options

Bid Award

Contract: FSA26-EQU24.0, Equipment

Group: Stump Cutter

Item: 459, Toro, STX 38, STX 38

Description: Refer FSA Base Specifications PDF document.

Model Upgrade/Downgrade:

Zone	Rank	Vendor	Price	Build File	Options File
Western	Primary	Alta Construction Equipment Florida, LLC	$38,000.00	Build	Options
Northern	Primary	Alta Construction Equipment Florida, LLC	$38,000.00	Build	Options
Central	Primary	Alta Construction Equipment Florida, LLC	$38,000.00	Build	Options
Southern	Primary	Alta Construction Equipment Florida, LLC	$38,000.00	Build	Options

Bid Award

Contract: FSA26-EQU24.0, Equipment

Group: Stump Cutter

Item: 460, Vermeer, SC362, SC362

Description: Refer FSA Base Specifications PDF document.

Model Upgrade/Downgrade:

Zone	Rank	Vendor	Price	Build File	Options File
Western	Primary	Vermeer Southeast Sales	$32,136.00	Build	Options
Northern	Primary	Vermeer Southeast Sales	$32,136.00	Build	Options
Central	Primary	Vermeer Southeast Sales	$32,136.00	Build	Options
Southern	Primary	Vermeer Southeast Sales	$32,136.00	Build	Options

Bid Award

Contract: FSA26-EQU24.0, Equipment

Group: Sweeper: 3-Wheel Mechanical or Regenerative Air Sweeper

Item: 461, Elgin, Pelican NP, Pelican NP

Description: Refer FSA Base Specifications PDF document.

Model Upgrade/Downgrade:

Zone	Rank	Vendor	Price	Build File	Options File
Western	Primary	Environmental Products Group	$283,745.00	Build	Options
Northern	Primary	Environmental Products Group	$283,745.00	Build	Options
Central	Primary	Environmental Products Group	$283,745.00	Build	Options
Southern	Primary	Environmental Products Group	$283,745.00	Build	Options

Bid Award

Contract: FSA26-EQU24.0, Equipment

Group: Sweeper: 3-Wheel Mechanical or Regenerative Air Sweeper

Item: 462, Global, M3, M3

Description: Refer FSA Base Specifications PDF document.

Model Upgrade/Downgrade:

Zone	Rank	Vendor	Price	Build File	Options File
Western	Primary	Southern Sewer Equipment Sales	$267,518.00	Build	Options
Northern	Primary	Southern Sewer Equipment Sales	$267,518.00	Build	Options
Central	Primary	Southern Sewer Equipment Sales	$267,518.00	Build	Options
Southern	Primary	Southern Sewer Equipment Sales	$267,518.00	Build	Options

Bid Award

Contract: FSA26-EQU24.0, Equipment

Group: Sweeper: 3-Wheel Mechanical or Regenerative Air Sweeper

Item: 463, Global, R3, R3

Description: Refer FSA Base Specifications PDF document.

Model Upgrade/Downgrade:

Zone	Rank	Vendor	Price	Build File	Options File
Western	Primary	Southern Sewer Equipment Sales	$293,544.00	Build	Options
Northern	Primary	Southern Sewer Equipment Sales	$293,544.00	Build	Options
Central	Primary	Southern Sewer Equipment Sales	$293,544.00	Build	Options
Southern	Primary	Southern Sewer Equipment Sales	$293,544.00	Build	Options

Bid Award

Contract: FSA26-EQU24.0, Equipment

Group: Sweeper: Compact Air Sweeper - 2.3 cubic yd.

Item: 483, Ravo, R5, R5

Description: Refer FSA Base Specifications PDF document.

Model Upgrade/Downgrade:

Zone	Rank	Vendor	Price	Build File	Options File
Western	Primary	Sunbelt Waste Equipment LLC	$349,537.00	Build	Options
Northern	Primary	Sunbelt Waste Equipment LLC	$349,537.00	Build	Options
Central	Primary	Sunbelt Waste Equipment LLC	$349,537.00	Build	Options
Southern	Primary	Sunbelt Waste Equipment LLC	$349,537.00	Build	Options

Bid Award

Contract: FSA26-EQU24.0, Equipment

Group: Sweeper: Mechanical Broom Street Sweeper

Item: 466, Bucher Municipal, E35m, E35m

Description: Refer FSA Base Specifications PDF document.

Model Upgrade/Downgrade:

Zone	Rank	Vendor	Price	Build File	Options File
Western	Primary	Pat`s Pump & Blower	$445,000.00	Build	Options
Northern	Primary	Pat`s Pump & Blower	$445,000.00	Build	Options
Central	Primary	Pat`s Pump & Blower	$445,000.00	Build	Options
Southern	Primary	Pat`s Pump & Blower	$445,000.00	Build	Options

Bid Award

Contract: FSA26-EQU24.0, Equipment

Group: Sweeper: Mechanical Broom Street Sweeper

Item: 467, Elgin, Eagle, Eagle

Description: Refer FSA Base Specifications PDF document.

Model Upgrade/Downgrade:

Zone	Rank	Vendor	Price	Build File	Options File
Western	Primary	Environmental Products Group	$402,932.00	Build	Options
Northern	Primary	Environmental Products Group	$402,932.00	Build	Options
Central	Primary	Environmental Products Group	$402,932.00	Build	Options
Southern	Primary	Environmental Products Group	$402,932.00	Build	Options

Bid Award

Contract: FSA26-EQU24.0, Equipment

Group: Sweeper: Mechanical Broom Street Sweeper

Item: 470, Schwarze Industries, M6 Avalanche, M6 Avalanche

Description: Refer FSA Base Specifications PDF document.

Model Upgrade/Downgrade:

Zone	Rank	Vendor	Price	Build File	Options File
Western	Primary	Sunbelt Waste Equipment LLC	$433,896.00	Build	Options
Northern	Primary	Sunbelt Waste Equipment LLC	$433,896.00	Build	Options
Central	Primary	Sunbelt Waste Equipment LLC	$433,896.00	Build	Options
Southern	Primary	Sunbelt Waste Equipment LLC	$433,896.00	Build	Options

Bid Award

Contract: FSA26-EQU24.0, Equipment

Group: Sweeper: Regenerative Air Street Sweeper

Item: 471, Bucher Municipal, R65, R65

Description: Refer FSA Base Specifications PDF document.

Model Upgrade/Downgrade:

Zone	Rank	Vendor	Price	Build File	Options File
Western	Primary	Pat`s Pump & Blower	$410,000.00	Build	Options
Northern	Primary	Pat`s Pump & Blower	$410,000.00	Build	Options
Central	Primary	Pat`s Pump & Blower	$410,000.00	Build	Options
Southern	Primary	Pat`s Pump & Blower	$410,000.00	Build	Options

Bid Award

Contract: FSA26-EQU24.0, Equipment

Group: Sweeper: Regenerative Air Street Sweeper

Item: 472, Elgin, Regen X, Regen X

Description: Refer FSA Base Specifications PDF document.

Model Upgrade/Downgrade:

Zone	Rank	Vendor	Price	Build File	Options File
Western	Primary	Environmental Products Group	$315,932.00	Build	Options
Northern	Primary	Environmental Products Group	$315,932.00	Build	Options
Central	Primary	Environmental Products Group	$315,932.00	Build	Options
Southern	Primary	Environmental Products Group	$315,932.00	Build	Options

Bid Award

Contract: FSA26-EQU24.0, Equipment

Group: Sweeper: Regenerative Air Street Sweeper

Item: 473, Schwarze Industries, A7 Tornado, A7 Tornado

Description: Refer FSA Base Specifications PDF document.

Model Upgrade/Downgrade:

Zone	Rank	Vendor	Price	Build File	Options File
Western	Primary	Sunbelt Waste Equipment LLC	$353,514.00	Build	Options
Northern	Primary	Sunbelt Waste Equipment LLC	$353,514.00	Build	Options
Central	Primary	Sunbelt Waste Equipment LLC	$353,514.00	Build	Options
Southern	Primary	Sunbelt Waste Equipment LLC	$353,514.00	Build	Options

Bid Award

Contract: FSA26-EQU24.0, Equipment

Group: Sweeper: Regenerative Air Street Sweeper

Item: 474, Schwarze Industries, A8 Twister, A8 Twister

Description: Refer FSA Base Specifications PDF document.

Model Upgrade/Downgrade:

Zone	Rank	Vendor	Price	Build File	Options File
Western	Primary	Sunbelt Waste Equipment LLC	$447,457.00	Build	Options
Northern	Primary	Sunbelt Waste Equipment LLC	$447,457.00	Build	Options
Central	Primary	Sunbelt Waste Equipment LLC	$447,457.00	Build	Options
Southern	Primary	Sunbelt Waste Equipment LLC	$447,457.00	Build	Options

Bid Award

Contract: FSA26-EQU24.0, Equipment

Group: Sweeper: Regenerative Air Street Sweeper

Item: 475, Schwarze Industries, A9 Monsoon, A9 Monsoon

Description: Refer FSA Base Specifications PDF document.

Model Upgrade/Downgrade:

Zone	Rank	Vendor	Price	Build File	Options File
Western	Primary	Sunbelt Waste Equipment LLC	$383,501.00	Build	Options
Northern	Primary	Sunbelt Waste Equipment LLC	$383,501.00	Build	Options
Central	Primary	Sunbelt Waste Equipment LLC	$383,501.00	Build	Options
Southern	Primary	Sunbelt Waste Equipment LLC	$383,501.00	Build	Options

Bid Award

Contract: FSA26-EQU24.0, Equipment

Group: Sweeper: Regenerative Air Street Sweeper

Item: 476, Tymco, 600, 600

Description: Refer FSA Base Specifications PDF document.

Model Upgrade/Downgrade:

Zone	Rank	Vendor	Price	Build File	Options File
Western	Primary	Container Systems & Equipment Co., Inc.	$360,250.00	Build	Options
Northern	Primary	Container Systems & Equipment Co., Inc.	$360,250.00	Build	Options
Central	Primary	Container Systems & Equipment Co., Inc.	$360,250.00	Build	Options
Southern	Primary	Container Systems & Equipment Co., Inc.	$360,250.00	Build	Options

Bid Award

Contract: FSA26-EQU24.0, Equipment

Group: Sweeper: Self-Propelled Hydrostatic Broom

Item: 477, Broce, 350 Broom, 350 Broom

Description: Refer FSA Base Specifications PDF document.

Model Upgrade/Downgrade:

Zone	Rank	Vendor	Price	Build File	Options File
Western	Primary	Cowin Equipment Company	$81,628.00	Build	Options
Northern	Primary	Alta Construction Equipment Florida, LLC	$80,000.00	Build	
Central	Primary	Alta Construction Equipment Florida, LLC	$80,000.00	Build	
Southern	Primary	Alta Construction Equipment Florida, LLC	$80,000.00	Build	

Bid Award

Contract: FSA26-EQU24.0, Equipment

Group: Sweeper: Self-Propelled Hydrostatic Broom

Item: 478, LeeBoy, RB-50, RB-50

Description: Refer FSA Base Specifications PDF document.

Model Upgrade/Downgrade:

Zone	Rank	Vendor	Price	Build File	Options File
Western	Primary	Dobbs Equipment, LLC	$87,325.00	Build	Options
Northern	Primary	Dobbs Equipment, LLC	$87,325.00	Build	Options
Central	Primary	Dobbs Equipment, LLC	$87,325.00	Build	Options
Southern	Primary	Dobbs Equipment, LLC	$87,325.00	Build	Options

Bid Award

Contract: FSA26-EQU24.0, Equipment

Group: Sweeper: Self-Propelled Hydrostatic Broom

Item: 481, Weiler, B400, B400

Description: Refer FSA Base Specifications PDF document.

Model Upgrade/Downgrade:

Zone	Rank	Vendor	Price	Build File	Options File
Western					
Northern					
Central					
Southern	Primary	Kelly Tractor Co	$220,495.00	Build	Options

Bid Award

Contract: FSA26-EQU24.0, Equipment

Group: Sweeper: Vacuum Street Sweeper

Item: 484, Scarab, Magnum, U72

Description: Refer FSA Base Specifications PDF document.

Model Upgrade/Downgrade:

Zone	Rank	Vendor	Price	Build File	Options File
Western	Primary	Evervac Equipment	$274,825.00	Build	Options
Northern	Primary	Evervac Equipment	$274,825.00	Build	Options
Central	Primary	Evervac Equipment	$274,825.00	Build	Options
Southern	Primary	Evervac Equipment	$274,825.00	Build	Options

Bid Award

Contract: FSA26-EQU24.0, Equipment

Group: Sweeper: Vacuum Street Sweeper

Item: 664, Elgin, Whirlwind, Whirlwind

Description: Refer FSA Base Specifications PDF document.

Model Upgrade/Downgrade:

Zone	Rank	Vendor	Price	Build File	Options File
Western	Primary	Environmental Products Group	$405,364.00	Build	Options
Northern	Primary	Environmental Products Group	$405,364.00	Build	Options
Central	Primary	Environmental Products Group	$405,364.00	Build	Options
Southern	Primary	Environmental Products Group	$405,364.00	Build	Options

Bid Award

Contract: FSA26-EQU24.0, Equipment

Group: Sweeper: Walk Behind Floor Sweeper/Scrubber

Item: 485, PowerBoss, Phoenix, 26

Description: Refer FSA Base Specifications PDF document.

Model Upgrade/Downgrade:

Zone	Rank	Vendor	Price	Build File	Options File
Western	Primary	Southern States ToyotaLift	$12,195.00	Build	Options
Northern	Primary	Southern States ToyotaLift	$12,195.00	Build	Options
Central	Primary	Southern States ToyotaLift	$12,195.00	Build	Options
Southern	Primary	Southern States ToyotaLift	$12,195.00	Build	Options

Bid Award

Contract: FSA26-EQU24.0, Equipment

Group: Sweeper: Walk Behind Floor Sweeper/Scrubber

Item: 665, Advance by Nilfisk, SC750 26D, 56112395

Description: Refer FSA Base Specifications PDF document.

Model Upgrade/Downgrade:

Zone	Rank	Vendor	Price	Build File	Options File
Western	Primary	National Lift Truck Service	$12,142.00	Build	Options
	Alternate	Ring Power Corporation	$15,921.00	Build	Options
	Alternate	Federal Contracts LLC DBA Federal Contracts Company	$16,569.00	Build	Options
Northern	Primary	National Lift Truck Service	$12,142.00	Build	Options
	Alternate	Ring Power Corporation	$15,921.00	Build	Options
	Alternate	Federal Contracts LLC DBA Federal Contracts Company	$16,569.00	Build	Options
Central	Primary	National Lift Truck Service	$12,142.00	Build	Options
	Alternate	Ring Power Corporation	$15,921.00	Build	Options
	Alternate	Federal Contracts LLC DBA Federal Contracts Company	$16,569.00	Build	Options
Southern	Primary	National Lift Truck Service	$12,142.00	Build	Options
	Alternate	Federal Contracts LLC DBA Federal Contracts Company	$16,569.00	Build	Options

Bid Award

Contract: FSA26-EQU24.0, Equipment

Group: Sweeper: Walk Behind Floor Sweeper/Scrubber

Item: 666, Kärcher, BD 70/75 W BB Classic, BD 70/75 W BB Classic

Description: Refer FSA Base Specifications PDF document.

Model Upgrade/Downgrade:

Zone	Rank	Vendor	Price	Build File	Options File
Western	Primary	Federal Contracts LLC DBA Federal Contracts Company	$10,171.00	Build	Options
Northern	Primary	Federal Contracts LLC DBA Federal Contracts Company	$10,171.00	Build	Options
Central	Primary	Federal Contracts LLC DBA Federal Contracts Company	$10,171.00	Build	Options
Southern	Primary	Federal Contracts LLC DBA Federal Contracts Company	$10,171.00	Build	Options

Bid Award

Contract: FSA26-EQU24.0, Equipment

Group: Tactical Vehicle: Skid Steer Mounted (The Rook)

Item: 486, Caterpillar, 275 with Rook Option, 275 with Rook Option

Description: Refer FSA Base Specifications PDF document.

Model Upgrade/Downgrade:

Zone	Rank	Vendor	Price	Build File	Options File
Western	Primary	Ring Power Corporation	$475,000.00	Build	Options
Northern	Primary	Ring Power Corporation	$475,000.00	Build	Options
Central	Primary	Ring Power Corporation	$475,000.00	Build	Options
Southern	Primary	Ring Power Corporation	$475,000.00	Build	Options

Bid Award

Contract: FSA26-EQU24.0, Equipment

Group: Tool Carrier: Hydrostatic Drive

Item: 487, Alamo Industrial, Mantis, 155B

Description: Refer FSA Base Specifications PDF document.

Model Upgrade/Downgrade:

Zone	Rank	Vendor	Price	Build File	Options File
Western	Primary	Alamo Group Municipal Mowing Solutions LLC	$205,214.00	Build	Options
Northern	Primary	Alamo Group Municipal Mowing Solutions LLC	$205,214.00	Build	Options
Central	Primary	Alamo Group Municipal Mowing Solutions LLC	$205,214.00	Build	Options
Southern	Primary	Alamo Group Municipal Mowing Solutions LLC	$205,214.00	Build	Options

Bid Award

Contract: FSA26-EQU24.0, Equipment

Group: Tool Carrier: Hydrostatic Drive

Item: 488, Diamond Mowers, DM360, DM360

Description: Refer FSA Base Specifications PDF document.

Model Upgrade/Downgrade:

Zone	Rank	Vendor	Price	Build File	Options File
Western	Primary	Ring Power Corporation	$262,968.00	Build	Options
Northern	Primary	Ring Power Corporation	$262,968.00	Build	Options
Central	Primary Alternate	Kelly Tractor Co Ring Power Corporation	$241,500.00 $262,968.00	Build Build	Options Options
Southern	Primary	Kelly Tractor Co	$241,500.00	Build	Options

Bid Award

Contract: FSA26-EQU24.0, Equipment

Group: Tool Carrier: Hydrostatic Drive

Item: 489, Energreen America, Kommunal, Kommunal

Description: Refer FSA Base Specifications PDF document.

Model Upgrade/Downgrade:

Zone	Rank	Vendor	Price	Build File	Options File
Western	Primary	Everglades Equipment Group	$280,000.00	Build	Options
Northern	Primary	Everglades Equipment Group	$280,000.00	Build	Options
Central	Primary	Everglades Equipment Group	$280,000.00	Build	Options
Southern	Primary	Everglades Equipment Group	$280,000.00	Build	Options

Bid Award

Contract: FSA26-EQU24.0, Equipment

Group: Tool Carrier: Hydrostatic Drive

Item: 490, MowerMax, Tool Carrier, MMB22

Description: Refer FSA Base Specifications PDF document.

Model Upgrade/Downgrade:

Zone	Rank	Vendor	Price	Build File	Options File
Western	Primary	MowerMax Equipment Co.	$214,636.00	Build	
Northern	Primary	MowerMax Equipment Co.	$214,636.00	Build	
Central	Primary	MowerMax Equipment Co.	$214,636.00	Build	
Southern	Primary	MowerMax Equipment Co.	$214,636.00	Build	

Bid Award

Contract: FSA26-EQU24.0, Equipment

Group: Tractor: Agriculture Tractor - 4x2

Item: 492, John Deere, 5105M, 5105M

Description: Refer FSA Base Specifications PDF document.

Model Upgrade/Downgrade:

Zone	Rank	Vendor	Price	Build File	Options File
Western	Primary	Everglades Equipment Group	$73,600.00	Build	Options
Northern	Primary	Everglades Equipment Group	$73,600.00	Build	Options
Central	Primary	Everglades Equipment Group	$73,600.00	Build	Options
Southern	Primary	Everglades Equipment Group	$73,600.00	Build	Options

Bid Award

Contract: FSA26-EQU24.0, Equipment

Group: Tractor: Agriculture Tractor - 4x2

Item: 493, Kubota, M5-111HF-1, M5-111HF-1

Description: Refer FSA Base Specifications PDF document.

Model Upgrade/Downgrade:

Zone	Rank	Vendor	Price	Build File	Options File
Western	Primary	Creel Tractor Company	$50,380.00	Build	Options
Northern	Primary Alternate	Creel Tractor Company Florida Coast Equipment, Inc.	$50,130.00 $51,097.00	Build Build	Options Options
Central	Primary Alternate	Creel Tractor Company Florida Coast Equipment, Inc.	$49,880.00 $51,097.00	Build Build	Options Options
Southern	Primary Alternate	Creel Tractor Company Florida Coast Equipment, Inc.	$49,480.00 $51,097.00	Build Build	Options Options

Bid Award

Contract: FSA26-EQU24.0, Equipment

Group: Tractor: Agriculture Tractor - 4x2

Item: 494, Massey Ferguson, MF4709, MF4709

Description: Refer FSA Base Specifications PDF document.

Model Upgrade/Downgrade:

Zone	Rank	Vendor	Price	Build File	Options File
Western	Primary	OCALA TRACTOR, LCC	$44,400.00	Build	Options
	Alternate	Ring Power Corporation	$53,731.00	Build	Options
Northern	Primary	OCALA TRACTOR, LCC	$43,400.00	Build	Options
	Alternate	Ring Power Corporation	$53,731.00	Build	Options
Central	Primary	OCALA TRACTOR, LCC	$43,400.00	Build	Options
	Alternate	Ring Power Corporation	$53,731.00	Build	Options
	Alternate	Kelly Tractor Co	$53,850.00	Build	Options
Southern	Primary	OCALA TRACTOR, LCC	$44,400.00	Build	Options
	Alternate	Kelly Tractor Co	$53,850.00	Build	Options

Bid Award

Contract: FSA26-EQU24.0, Equipment

Group: Tractor: Agriculture Tractor - 4x2

Item: 495, New Holland, Powerstar, 100

Description: Refer FSA Base Specifications PDF document.

Model Upgrade/Downgrade:

Zone	Rank	Vendor	Price	Build File	Options File
Western	Primary Alternate	Love Power Equipment, Inc OCALA TRACTOR, LCC	$77,500.00 $89,490.00	Build Build	Options Options
Northern	Primary Alternate	Love Power Equipment, Inc OCALA TRACTOR, LCC	$75,500.00 $89,490.00	Build Build	Options Options
Central	Primary Alternate	Love Power Equipment, Inc OCALA TRACTOR, LCC	$75,500.00 $89,490.00	Build Build	Options Options
Southern	Primary Alternate	Love Power Equipment, Inc OCALA TRACTOR, LCC	$77,500.00 $89,490.00	Build Build	Options Options

Bid Award

Contract: FSA26-EQU24.0, Equipment

Group: Tractor: Agriculture Tractor - 4x2

Item: 496, New Holland, PowerStar Series, PowerStar 100

Description: Refer FSA Base Specifications PDF document.

Model Upgrade/Downgrade:

Zone	Rank	Vendor	Price	Build File	Options File
Western	Primary Alternate	Love Power Equipment, Inc OCALA TRACTOR, LCC	$77,500.00 $89,490.00	Build Build	Options Options
Northern	Primary Alternate	Love Power Equipment, Inc OCALA TRACTOR, LCC	$75,500.00 $89,490.00	Build Build	Options Options
Central	Primary Alternate	Love Power Equipment, Inc OCALA TRACTOR, LCC	$75,500.00 $89,490.00	Build Build	Options Options
Southern	Primary Alternate	Love Power Equipment, Inc OCALA TRACTOR, LCC	$77,500.00 $89,490.00	Build Build	Options Options

Bid Award

Contract: FSA26-EQU24.0, Equipment

Group: Tractor: Compact Articulating Tractor - AWD

Item: 497, Avant, 528, 528

Description: Refer FSA Base Specifications PDF document.

Model Upgrade/Downgrade:

Zone	Rank	Vendor	Price	Build File	Options File
Western	Primary	Alta Construction Equipment Florida, LLC	$50,000.00	Build	Options
Northern	Primary	Alta Construction Equipment Florida, LLC	$50,000.00	Build	Options
Central	Primary	Alta Construction Equipment Florida, LLC	$50,000.00	Build	Options
Southern	Primary	Alta Construction Equipment Florida, LLC	$50,000.00	Build	Options

Bid Award

Contract: FSA26-EQU24.0, Equipment

Group: Tractor: Small Agriculture Tractor - 4x4

Item: 498, Bad Boy, 40 Series, 4035

Description: Refer FSA Base Specifications PDF document.

Model Upgrade/Downgrade:

Zone	Rank	Vendor	Price	Build File	Options File
Western	Primary	Love Power Equipment, Inc	$26,900.00	Build	Options
Northern	Primary	Love Power Equipment, Inc	$26,500.00	Build	Options
Central	Primary	Love Power Equipment, Inc	$26,500.00	Build	Options
Southern	Primary	Love Power Equipment, Inc	$26,900.00	Build	Options

Bid Award

Contract: FSA26-EQU24.0, Equipment

Group: Tractor: Small Agriculture Tractor - 4x4

Item: 501, John Deere, 3035D, 3035D

Description: Refer FSA Base Specifications PDF document.

Model Upgrade/Downgrade:

Zone	Rank	Vendor	Price	Build File	Options File
Western	Primary	Everglades Equipment Group	$22,400.00	Build	Options
Northern	Primary	Everglades Equipment Group	$22,400.00	Build	Options
Central	Primary	Everglades Equipment Group	$22,400.00	Build	Options
Southern	Primary	Everglades Equipment Group	$22,400.00	Build	Options

Bid Award

Contract: FSA26-EQU24.0, Equipment

Group: Tractor: Small Agriculture Tractor - 4x4

Item: 502, Kioti, CK3520, CK3520

Description: Refer FSA Base Specifications PDF document.

Model Upgrade/Downgrade:

Zone	Rank	Vendor	Price	Build File	Options File
Western	Primary	OCALA TRACTOR, LCC	$19,900.00	Build	Options
Northern	Primary	OCALA TRACTOR, LCC	$19,500.00	Build	Options
Central	Primary	OCALA TRACTOR, LCC	$19,500.00	Build	Options
Southern	Primary	OCALA TRACTOR, LCC	$20,100.00	Build	Options

Bid Award

Contract: FSA26-EQU24.0, Equipment

Group: Tractor: Small Agriculture Tractor - 4x4

Item: 503, Kubota, L3902 DT, L3902 DT

Description: Refer FSA Base Specifications PDF document.

Model Upgrade/Downgrade:

Zone	Rank	Vendor	Price	Build File	Options File
Western	Primary	Creel Tractor Company	$22,980.00	Build	Options
Northern	Primary Alternate	Creel Tractor Company Florida Coast Equipment, Inc.	$22,780.00 $23,127.00	Build Build	Options Options
Central	Primary Alternate	Creel Tractor Company Florida Coast Equipment, Inc.	$22,530.00 $23,127.00	Build Build	Options Options
Southern	Primary Alternate	Creel Tractor Company Florida Coast Equipment, Inc.	$21,980.00 $23,127.00	Build Build	Options Options

Bid Award

Contract: FSA26-EQU24.0, Equipment

Group: Tractor: Small Agriculture Tractor - 4x4

Item: 504, Massey Ferguson, MF1E.35, MF1E.35

Description: Refer FSA Base Specifications PDF document.

Model Upgrade/Downgrade:

Zone	Rank	Vendor	Price	Build File	Options File
Western	Primary	OCALA TRACTOR, LCC	$19,500.00	Build	Options
	Alternate	Kelly Tractor Co	$25,450.00	Build	Options
Northern	Primary	OCALA TRACTOR, LCC	$19,200.00	Build	Options
	Alternate	Kelly Tractor Co	$25,450.00	Build	Options
Central	Primary	OCALA TRACTOR, LCC	$19,200.00	Build	Options
	Alternate	Kelly Tractor Co	$24,450.00	Build	Options
Southern	Primary	OCALA TRACTOR, LCC	$19,700.00	Build	Options
	Alternate	Kelly Tractor Co	$24,450.00	Build	Options

Bid Award

Contract: FSA26-EQU24.0, Equipment

Group: Tractor: Small Agriculture Tractor - 4x4

Item: 505, New Holland, Boomer, 35

Description: Refer FSA Base Specifications PDF document.

Model Upgrade/Downgrade:

Zone	Rank	Vendor	Price	Build File	Options File
Western	Primary Primary	Love Power Equipment, Inc OCALA TRACTOR, LCC	$29,900.00 $29,900.00	Build Build	Options Options
Northern	Primary Alternate	Love Power Equipment, Inc OCALA TRACTOR, LCC	$29,400.00 $29,500.00	Build Build	Options Options
Central	Primary Alternate	Love Power Equipment, Inc OCALA TRACTOR, LCC	$29,400.00 $29,500.00	Build Build	Options Options
Southern	Primary Primary	Love Power Equipment, Inc OCALA TRACTOR, LCC	$29,900.00 $29,900.00	Build Build	Options Options

Bid Award

Contract: FSA26-EQU24.0, Equipment

Group: Tractor: Small Agriculture Tractor - 4x4

Item: 506, New Holland, Boomer Compact, Boomer 35

Description: Refer FSA Base Specifications PDF document.

Model Upgrade/Downgrade:

Zone	Rank	Vendor	Price	Build File	Options File
Western	Primary	Love Power Equipment, Inc	$29,900.00	Build	Options
	Primary	OCALA TRACTOR, LCC	$29,900.00	Build	Options
Northern	Primary	Love Power Equipment, Inc	$29,400.00	Build	Options
	Alternate	OCALA TRACTOR, LCC	$29,500.00	Build	Options
Central	Primary	Love Power Equipment, Inc	$29,400.00	Build	Options
	Alternate	OCALA TRACTOR, LCC	$29,500.00	Build	Options
Southern	Primary	Love Power Equipment, Inc	$29,900.00	Build	Options
	Primary	OCALA TRACTOR, LCC	$29,900.00	Build	Options

Bid Award

Contract: FSA26-EQU24.0, Equipment

Group: Tractor: Tractor with Boom Mower - 4x4

Item: 508, John Deere, 6M125 Alamo Industrial Mower, 6M125

Description: Refer FSA Base Specifications PDF document.

Model Upgrade/Downgrade:

Zone	Rank	Vendor	Price	Build File	Options File
Western	Primary	Alamo Group Municipal Mowing Solutions LLC	$247,048.00	Build	Options
Northern	Primary	Alamo Group Municipal Mowing Solutions LLC	$247,048.00	Build	Options
Central	Primary	Alamo Group Municipal Mowing Solutions LLC	$247,048.00	Build	Options
Southern	Primary	Alamo Group Municipal Mowing Solutions LLC	$247,048.00	Build	Options

Bid Award

Contract: FSA26-EQU24.0, Equipment

Group: Tractor: Tractor with Boom Mower - 4x4

Item: 509, John Deere, 6M125 with Tiger Bengal Boom Mower, 6M125

Description: Refer FSA Base Specifications PDF document.

Model Upgrade/Downgrade:

Zone	Rank	Vendor	Price	Build File	Options File
Western	Primary	Alamo Group Municipal Mowing Solutions LLC	$248,294.00	Build	Options
Northern	Primary	Alamo Group Municipal Mowing Solutions LLC	$248,294.00	Build	Options
Central	Primary	Alamo Group Municipal Mowing Solutions LLC	$248,294.00	Build	Options
Southern	Primary	Alamo Group Municipal Mowing Solutions LLC	$248,294.00	Build	Options

Bid Award

Contract: FSA26-EQU24.0, Equipment

Group: Tractor: Tractor with Boom Mower - 4x4

Item: 510, Kubota, M6S-111 with Terrain King KB2300 Boom Mower, M6S-111

Description: Refer FSA Base Specifications PDF document.

Model Upgrade/Downgrade:

Zone	Rank	Vendor	Price	Build File	Options File
Western	Primary	Alamo Group Municipal Mowing Solutions LLC	$198,092.00	Build	Options
Northern	Primary	Alamo Group Municipal Mowing Solutions LLC	$198,092.00	Build	Options
Central	Primary	Alamo Group Municipal Mowing Solutions LLC	$198,092.00	Build	Options
Southern	Primary	Alamo Group Municipal Mowing Solutions LLC	$198,092.00	Build	Options

Bid Award

Contract: FSA26-EQU24.0, Equipment

Group: Tractor: Tractor with Boom Mower - 4x4

Item: 511, Massey Ferguson, 6S.145 with Diamond Boom Mower, 6S.145

Description: Refer FSA Base Specifications PDF document.

Model Upgrade/Downgrade:

Zone	Rank	Vendor	Price	Build File	Options File
Western	Primary	Ring Power Corporation	$252,207.00	Build	Options
Northern	Primary	Ring Power Corporation	$252,207.00	Build	Options
Central	Primary Alternate	Kelly Tractor Co Ring Power Corporation	$236,350.00 $252,207.00	Build Build	Options Options
Southern	Primary	Kelly Tractor Co	$236,350.00	Build	Options

Bid Award

Contract: FSA26-EQU24.0, Equipment

Group: Trailer: Container Chassis Trailer - 73,900 lbs. GVWR

Item: 512, Pitts Trailers, SC40P Chassis Trailer, SC40P

Description: Refer FSA Base Specifications PDF document.

Model Upgrade/Downgrade:

Zone	Rank	Vendor	Price	Build File	Options File
Western	Primary	Nationwide Haul LLC	$36,500.00	Build	Options
Northern	Primary	Nationwide Haul LLC	$36,500.00	Build	Options
Central	Primary	Nationwide Haul LLC	$36,500.00	Build	Options
Southern	Primary	Nationwide Haul LLC	$36,500.00	Build	Options

Bid Award

Contract: FSA26-EQU24.0, Equipment

Group: Trailer: Deck Over Equipment Trailer - 40,000 lbs. GVWR

Item: 513, Behnke, Super Duty Flatbed Trailer, FB8X25SDPT-40L

Description: Refer FSA Base Specifications PDF document.

Model Upgrade/Downgrade:

Zone	Rank	Vendor	Price	Build File	Options File
Western	Primary	RIGHT TRAILERS, INC.	$37,014.00	Build	Options
Northern	Primary	RIGHT TRAILERS, INC.	$36,614.00	Build	Options
Central	Primary	RIGHT TRAILERS, INC.	$36,314.00	Build	Options
Southern	Primary	RIGHT TRAILERS, INC.	$36,614.00	Build	Options

Bid Award

Contract: FSA26-EQU24.0, Equipment

Group: Trailer: Deck Over Equipment Trailer - 40,000 lbs. GVWR

Item: 514, Big Tex, 4XPH-20+5, 4XPH-20+5

Description: Refer FSA Base Specifications PDF document.

Model Upgrade/Downgrade:

Zone	Rank	Vendor	Price	Build File	Options File
Western	Primary	Texas Trailers Sales and Service	$39,273.00	Build	Options
Northern	Primary	Texas Trailers Sales and Service	$38,623.00	Build	Options
Central	Primary	Texas Trailers Sales and Service	$38,873.00	Build	Options
Southern	Primary	Texas Trailers Sales and Service	$39,373.00	Build	Options

Bid Award

Contract: FSA26-EQU24.0, Equipment

Group: Trailer: Deck Over Equipment Trailer - 40,000 lbs. GVWR

Item: 515, EAGER BEAVER, Eager Beaver 20-XPT Trailer, 20XPT

Description: Refer FSA Base Specifications PDF document.

Model Upgrade/Downgrade:

Zone	Rank	Vendor	Price	Build File	Options File
Western	Primary	Dobbs Equipment, LLC	$32,250.00	Build	Options
Northern	Primary	Dobbs Equipment, LLC	$32,250.00	Build	Options
Central	Primary	Dobbs Equipment, LLC	$32,250.00	Build	Options
Southern	Primary	Dobbs Equipment, LLC	$32,250.00	Build	Options

Bid Award

Contract: FSA26-EQU24.0, Equipment

Group: Trailer: Deck Over Equipment Trailer - 40,000 lbs. GVWR

Item: 516, Econoline, 24 Ton Deckover Dovetail, DP2425DA

Description: Refer FSA Base Specifications PDF document.

Model Upgrade/Downgrade:

Zone	Rank	Vendor	Price	Build File	Options File
Western	Primary	DeLand Truck Center, Inc.	$29,461.00	Build	Options
Northern	Primary	DeLand Truck Center, Inc.	$29,661.00	Build	Options
Central	Primary	DeLand Truck Center, Inc.	$29,461.00	Build	Options
Southern	Primary	DeLand Truck Center, Inc.	$29,561.00	Build	Options

Bid Award

Contract: FSA26-EQU24.0, Equipment

Group: Trailer: Deck Over Equipment Trailer - 40,000 lbs. GVWR

Item: 518, Interstate, 40DLA, 40DLA

Description: Refer FSA Base Specifications PDF document.

Model Upgrade/Downgrade:

Zone	Rank	Vendor	Price	Build File	Options File
Western	Primary	Dobbs Equipment, LLC	$27,975.00	Build	Options
Northern	Primary	Dobbs Equipment, LLC	$27,975.00	Build	Options
Central	Primary Alternate	Kelly Tractor Co Dobbs Equipment, LLC	$25,990.00 $27,975.00	Build Build	Options Options
Southern	Primary Alternate	Kelly Tractor Co Dobbs Equipment, LLC	$25,990.00 $27,975.00	Build Build	Options Options

Bid Award

Contract: FSA26-EQU24.0, Equipment

Group: Trailer: Deck Over Equipment Trailer - 40,000 lbs. GVWR

Item: 519, Pitts Trailers, TA-20, TA-20

Description: Refer FSA Base Specifications PDF document.

Model Upgrade/Downgrade:

Zone	Rank	Vendor	Price	Build File	Options File
Western	Primary	Nationwide Haul LLC	$31,995.00	Build	Options
Northern	Primary	Nationwide Haul LLC	$31,995.00	Build	Options
Central	Primary	Nationwide Haul LLC	$31,995.00	Build	Options
Southern	Primary	Nationwide Haul LLC	$31,995.00	Build	Options

Bid Award

Contract: FSA26-EQU24.0, Equipment

Group: Trailer: Deck Over Equipment Trailer - 40,000 lbs. GVWR

Item: 521, Texas Trailers, FB2540GVB, FB2540GVB

Description: Refer FSA Base Specifications PDF document.

Model Upgrade/Downgrade:

Zone	Rank	Vendor	Price	Build File	Options File
Western	Primary	Texas Trailers Sales and Service	$35,800.00	Build	Options
Northern	Primary	Texas Trailers Sales and Service	$34,800.00	Build	Options
Central	Primary	Texas Trailers Sales and Service	$35,300.00	Build	Options
Southern	Primary	Texas Trailers Sales and Service	$35,800.00	Build	Options

Bid Award

Contract: FSA26-EQU24.0, Equipment

Group: Trailer: Deck Over Equipment Trailer - 40,000 lbs. GVWR

Item: 522, Trail King, TK40LP, TK40LP

Description: Refer FSA Base Specifications PDF document.

Model Upgrade/Downgrade:

Zone	Rank	Vendor	Price	Build File	Options File
Western	Primary	Alta Construction Equipment Florida, LLC	$35,000.00	Build	Options
Northern	Primary	Alta Construction Equipment Florida, LLC	$35,000.00	Build	Options
Central	Primary	Alta Construction Equipment Florida, LLC	$35,000.00	Build	Options
Southern	Primary	Alta Construction Equipment Florida, LLC	$35,000.00	Build	Options

Bid Award

Contract: FSA26-EQU24.0, Equipment

Group: Trailer: Deck Over Equipment Trailer - 40,000 lbs. GVWR

Item: 667, Towmaster, T-40LP, T-40LP

Description: Refer FSA Base Specifications PDF document.

Model Upgrade/Downgrade:

Zone	Rank	Vendor	Price	Build File	Options File
Western	Primary	Ring Power Corporation	$38,859.00	Build	Options
Northern	Primary	Ring Power Corporation	$38,859.00	Build	Options
Central	Primary	Ring Power Corporation	$38,859.00	Build	Options
Southern					

Bid Award

Contract: FSA26-EQU24.0, Equipment

Group: Trailer: Deck Over Flatbed Trailer - 14,000 lbs. GVWR

Item: 523, Big Tex, 14PH-25BK+5, 14PH-25BK+5

Description: Refer FSA Base Specifications PDF document.

Model Upgrade/Downgrade:

Zone	Rank	Vendor	Price	Build File	Options File
Western	Primary	Texas Trailers Sales and Service	$10,133.00	Build	Options
Northern	Primary	Texas Trailers Sales and Service	$9,483.00	Build	Options
Central	Primary	Texas Trailers Sales and Service	$9,733.00	Build	Options
Southern	Primary	Texas Trailers Sales and Service	$10,233.00	Build	Options

Bid Award

Contract: FSA26-EQU24.0, Equipment

Group: Trailer: Deck Over Flatbed Trailer - 14,000 lbs. GVWR

Item: 524, Bigfoot Trailers, Super Monster 17.5K Deckover Trailer, Super Monster 17.5K

Description: Refer FSA Base Specifications PDF document.

Model Upgrade/Downgrade:

Zone	Rank	Vendor	Price	Build File	Options File
Western	Primary	RIGHT TRAILERS, INC.	$14,250.00	Build	Options
Northern	Primary	RIGHT TRAILERS, INC.	$13,950.00	Build	Options
Central	Primary	RIGHT TRAILERS, INC.	$13,650.00	Build	Options
Southern	Primary	RIGHT TRAILERS, INC.	$13,950.00	Build	Options

Bid Award

Contract: FSA26-EQU24.0, Equipment

Group: Trailer: Deck Over Flatbed Trailer - 14,000 lbs. GVWR

Item: 525, Down 2 Earth, 102” X 26′ Deckover 16k GVWR, DTE826DO8B

Description: Refer FSA Base Specifications PDF document.

Model Upgrade/Downgrade:

Zone	Rank	Vendor	Price	Build File	Options File
Western	Primary	Love Power Equipment, Inc	$12,565.00	Build	Options
Northern	Primary	Love Power Equipment, Inc	$12,265.00	Build	Options
Central	Primary	Love Power Equipment, Inc	$12,265.00	Build	Options
Southern	Primary	Love Power Equipment, Inc	$12,565.00	Build	Options

Bid Award

Contract: FSA26-EQU24.0, Equipment

Group: Trailer: Deck Over Flatbed Trailer - 14,000 lbs. GVWR

Item: 526, Econoline, BP0725DE, BP0725DE

Description: Refer FSA Base Specifications PDF document.

Model Upgrade/Downgrade:

Zone	Rank	Vendor	Price	Build File	Options File
Western	Primary	DeLand Truck Center, Inc.	$12,676.00	Build	Options
Northern	Primary	DeLand Truck Center, Inc.	$12,576.00	Build	Options
Central	Primary	DeLand Truck Center, Inc.	$12,476.00	Build	Options
Southern	Primary	DeLand Truck Center, Inc.	$12,676.00	Build	Options

Bid Award

Contract: FSA26-EQU24.0, Equipment

Group: Trailer: Deck Over Flatbed Trailer - 14,000 lbs. GVWR

Item: 527, Felling, FT-14-2, FT-14-2

Description: Refer FSA Base Specifications PDF document.

Model Upgrade/Downgrade:

Zone	Rank	Vendor	Price	Build File	Options File
Western	Primary	Federal Contracts LLC DBA Federal Contracts Company	$22,301.00	Build	Options
Northern	Primary	Federal Contracts LLC DBA Federal Contracts Company	$22,301.00	Build	Options
Central	Primary	Federal Contracts LLC DBA Federal Contracts Company	$22,301.00	Build	Options
Southern	Primary	Kelly Tractor Co	$21,945.00	Build	Options

Bid Award

Contract: FSA26-EQU24.0, Equipment

Group: Trailer: Deck Over Flatbed Trailer - 14,000 lbs. GVWR

Item: 528, Interstate, 14BST, 14BST

Description: Refer FSA Base Specifications PDF document.

Model Upgrade/Downgrade:

Zone	Rank	Vendor	Price	Build File	Options File
Western					
Northern					
Central	Primary	Kelly Tractor Co	$19,450.00	Build	Options
Southern	Primary	Kelly Tractor Co	$19,250.00	Build	Options

Bid Award

Contract: FSA26-EQU24.0, Equipment

Group: Trailer: Deck Over Flatbed Trailer - 14,000 lbs. GVWR

Item: 529, Maxx-D, I-Beam Deckover Trailer, DOX-16K

Description: Refer FSA Base Specifications PDF document.

Model Upgrade/Downgrade:

Zone	Rank	Vendor	Price	Build File	Options File
Western	Primary	RIGHT TRAILERS, INC.	$12,077.00	Build	Options
Northern	Primary	RIGHT TRAILERS, INC.	$11,777.00	Build	Options
Central	Primary	RIGHT TRAILERS, INC.	$11,477.00	Build	Options
Southern	Primary	RIGHT TRAILERS, INC.	$11,777.00	Build	Options

Bid Award

Contract: FSA26-EQU24.0, Equipment

Group: Trailer: Deck Over Flatbed Trailer - 14,000 lbs. GVWR

Item: 532, Texas Trailers, FB3014GVB, FB3014GVB

Description: Refer FSA Base Specifications PDF document.

Model Upgrade/Downgrade:

Zone	Rank	Vendor	Price	Build File	Options File
Western	Primary	Texas Trailers Sales and Service	$10,890.00	Build	Options
Northern	Primary	Texas Trailers Sales and Service	$10,240.00	Build	Options
Central	Primary	Texas Trailers Sales and Service	$10,490.00	Build	Options
Southern	Primary	Texas Trailers Sales and Service	$10,990.00	Build	Options

Bid Award

Contract: FSA26-EQU24.0, Equipment

Group: Trailer: Deck Over Flatbed Trailer - 14,000 lbs. GVWR

Item: 533, Towmaster, T-16LP, T-16LP

Description: Refer FSA Base Specifications PDF document.

Model Upgrade/Downgrade:

Zone	Rank	Vendor	Price	Build File	Options File
Western	Primary	Ring Power Corporation	$29,125.00	Build	Options
Northern	Primary	Ring Power Corporation	$29,125.00	Build	Options
Central	Primary	Ring Power Corporation	$29,125.00	Build	Options
Southern	Primary	Kelly Tractor Co	$28,300.00	Build	Options

Bid Award

Contract: FSA26-EQU24.0, Equipment

Group: Trailer: Deck Over Flatbed Trailer - 14,000 lbs. GVWR

Item: 534, Trail King, TK20LP, TK20LP

Description: Refer FSA Base Specifications PDF document.

Model Upgrade/Downgrade:

Zone	Rank	Vendor	Price	Build File	Options File
Western	Primary	Alta Construction Equipment Florida, LLC	$31,000.00	Build	Options
Northern	Primary	Alta Construction Equipment Florida, LLC	$31,000.00	Build	Options
Central	Primary	Alta Construction Equipment Florida, LLC	$31,000.00	Build	Options
Southern	Primary	Alta Construction Equipment Florida, LLC	$31,000.00	Build	Options

Bid Award

Contract: FSA26-EQU24.0, Equipment

Group: Trailer: Deck Over Flatbed Trailer - 14,000 lbs. GVWR

Item: 668, Kaufman, 17,000 GVWR Deluxe Flatbed Trailer – 22ft, FP-8K-22D

Description: Refer FSA Base Specifications PDF document.

Model Upgrade/Downgrade:

Zone	Rank	Vendor	Price	Build File	Options File
Western	Primary	National Equipment Dealers, LLC	$11,490.00	Build	Options
Northern	Primary	National Equipment Dealers, LLC	$11,490.00	Build	Options
Central	Primary	National Equipment Dealers, LLC	$11,490.00	Build	Options
Southern	Primary	National Equipment Dealers, LLC	$11,490.00	Build	Options

Bid Award

Contract: FSA26-EQU24.0, Equipment

Group: Trailer: Detachable Neck Lowboy Trailer - 100,000 lbs. GVWR

Item: 535, EAGER BEAVER, Eager Beaver 50-GSL-3 Lowboy, 50-GSL-3

Description: Refer FSA Base Specifications PDF document.

Model Upgrade/Downgrade:

Zone	Rank	Vendor	Price	Build File	Options File
Western	Primary	Dobbs Equipment, LLC	$76,855.00	Build	Options
Northern	Primary	Dobbs Equipment, LLC	$76,855.00	Build	Options
Central	Primary	Dobbs Equipment, LLC	$76,855.00	Build	Options
Southern	Primary	Dobbs Equipment, LLC	$76,855.00	Build	Options

Bid Award

Contract: FSA26-EQU24.0, Equipment

Group: Trailer: Detachable Neck Lowboy Trailer - 100,000 lbs. GVWR

Item: 536, Felling, XF-100-3 HDG, XF-100-3 HDG

Description: Refer FSA Base Specifications PDF document.

Model Upgrade/Downgrade:

Zone	Rank	Vendor	Price	Build File	Options File
Western	Primary	Federal Contracts LLC DBA Federal Contracts Company	$111,673.00	Build	Options
Northern	Primary	Federal Contracts LLC DBA Federal Contracts Company	$111,673.00	Build	Options
Central	Primary	Federal Contracts LLC DBA Federal Contracts Company	$111,673.00	Build	Options
Southern	Primary	Kelly Tractor Co	$95,300.00	Build	Options

Bid Award

Contract: FSA26-EQU24.0, Equipment

Group: Trailer: Detachable Neck Lowboy Trailer - 100,000 lbs. GVWR

Item: 537, Pitts Trailers, 50-Ton Detach with an 18 Inch Load Deck Height, LB50-18GT

Description: Refer FSA Base Specifications PDF document.

Model Upgrade/Downgrade:

Zone	Rank	Vendor	Price	Build File	Options File
Western	Primary Alternate	DeLand Truck Center, Inc. Nationwide Haul LLC	$85,859.00 $90,722.00	Build Build	Options Options
Northern	Primary Alternate	DeLand Truck Center, Inc. Nationwide Haul LLC	$85,859.00 $90,722.00	Build Build	Options Options
Central	Primary Alternate	DeLand Truck Center, Inc. Nationwide Haul LLC	$85,859.00 $90,722.00	Build Build	Options Options
Southern	Primary Alternate	DeLand Truck Center, Inc. Nationwide Haul LLC	$85,859.00 $91,722.00	Build Build	Options Options

Bid Award

Contract: FSA26-EQU24.0, Equipment

Group: Trailer: Detachable Neck Lowboy Trailer - 100,000 lbs. GVWR

Item: 538, Pitts Trailers, LB55-22GT, LB55-22GT

Description: Refer FSA Base Specifications PDF document.

Model Upgrade/Downgrade:

Zone	Rank	Vendor	Price	Build File	Options File
Western	Primary Alternate	DeLand Truck Center, Inc. Nationwide Haul LLC	$79,631.00 $90,722.00	Build Build	Options Options
Northern	Primary Alternate	DeLand Truck Center, Inc. Nationwide Haul LLC	$79,631.00 $90,722.00	Build Build	Options Options
Central	Primary Alternate	DeLand Truck Center, Inc. Nationwide Haul LLC	$79,631.00 $90,722.00	Build Build	Options Options
Southern	Primary Alternate	DeLand Truck Center, Inc. Nationwide Haul LLC	$79,631.00 $91,722.00	Build Build	Options Options

Bid Award

Contract: FSA26-EQU24.0, Equipment

Group: Trailer: Detachable Neck Lowboy Trailer - 100,000 lbs. GVWR

Item: 539, Pitts Trailers, Hydraulic Detachable Trailer, LB51-22DC

Description: Refer FSA Base Specifications PDF document.

Model Upgrade/Downgrade:

Zone	Rank	Vendor	Price	Build File	Options File
Western	Primary Alternate	DeLand Truck Center, Inc. Nationwide Haul LLC	$66,751.00 $70,405.00	Build Build	Options Options
Northern	Primary Alternate	DeLand Truck Center, Inc. Nationwide Haul LLC	$66,751.00 $70,405.00	Build Build	Options Options
Central	Primary Alternate	DeLand Truck Center, Inc. Nationwide Haul LLC	$66,751.00 $70,405.00	Build Build	Options Options
Southern	Primary Alternate	DeLand Truck Center, Inc. Nationwide Haul LLC	$66,751.00 $71,405.00	Build Build	Options Options

Bid Award

Contract: FSA26-EQU24.0, Equipment

Group: Trailer: Detachable Neck Lowboy Trailer - 100,000 lbs. GVWR

Item: 541, Trail King, TK102HDG, TK102HDG

Description: Refer FSA Base Specifications PDF document.

Model Upgrade/Downgrade:

Zone	Rank	Vendor	Price	Build File	Options File
Western	Primary	Alta Construction Equipment Florida, LLC	$105,000.00	Build	Options
Northern	Primary	Alta Construction Equipment Florida, LLC	$105,000.00	Build	Options
Central	Primary	Alta Construction Equipment Florida, LLC	$105,000.00	Build	Options
Southern	Primary	Alta Construction Equipment Florida, LLC	$105,000.00	Build	Options

Bid Award

Contract: FSA26-EQU24.0, Equipment

Group: Trailer: Detachable Neck Lowboy Trailer - 100,000 lbs. GVWR

Item: 669, Kaufman, 50 Ton Detachable Gooseneck Air Ride Trailer – Standard, FRDT50-24-24-A-54-00-N

Description: Refer FSA Base Specifications PDF document.

Model Upgrade/Downgrade:

Zone	Rank	Vendor	Price	Build File	Options File
Western	Primary	National Equipment Dealers, LLC	$74,875.00	Build	Options
Northern	Primary	National Equipment Dealers, LLC	$74,875.00	Build	Options
Central	Primary	National Equipment Dealers, LLC	$74,875.00	Build	Options
Southern	Primary	National Equipment Dealers, LLC	$74,875.00	Build	Options

Bid Award

Contract: FSA26-EQU24.0, Equipment

Group: Trailer: Detachable Neck Lowboy Trailer - 100,000 lbs. GVWR

Item: 670, Towmaster, T-100DTG, T-100DTG

Description: Refer FSA Base Specifications PDF document.

Model Upgrade/Downgrade:

Zone	Rank	Vendor	Price	Build File	Options File
Western	Primary	Ring Power Corporation	$133,751.00	Build	Options
Northern	Primary	Ring Power Corporation	$133,751.00	Build	Options
Central	Primary	Ring Power Corporation	$133,751.00	Build	Options
Southern					

Bid Award

Contract: FSA26-EQU24.0, Equipment

Group: Trailer: Enclosed Cargo Trailer - 7,000 lbs. GVWR

Item: 543, ATC, Stō 400, Stō 400

Description: Refer FSA Base Specifications PDF document.

Model Upgrade/Downgrade:

Zone	Rank	Vendor	Price	Build File	Options File
Western	Primary	RIGHT TRAILERS, INC.	$14,178.00	Build	Options
Northern	Primary	RIGHT TRAILERS, INC.	$13,878.00	Build	Options
Central	Primary	RIGHT TRAILERS, INC.	$13,578.00	Build	Options
Southern	Primary	RIGHT TRAILERS, INC.	$13,878.00	Build	Options

Bid Award

Contract: FSA26-EQU24.0, Equipment

Group: Trailer: Enclosed Cargo Trailer - 7,000 lbs. GVWR

Item: 544, Cargo Mate, Blazer, BL716TA2

Description: Refer FSA Base Specifications PDF document.

Model Upgrade/Downgrade:

Zone	Rank	Vendor	Price	Build File	Options File
Western	Primary	Texas Trailers Sales and Service	$9,531.00	Build	Options
Northern	Primary	Texas Trailers Sales and Service	$8,881.00	Build	Options
Central	Primary	Texas Trailers Sales and Service	$9,131.00	Build	Options
Southern	Primary	Texas Trailers Sales and Service	$9,631.00	Build	Options

Bid Award

Contract: FSA26-EQU24.0, Equipment

Group: Trailer: Enclosed Cargo Trailer - 7,000 lbs. GVWR

Item: 545, Express, ECT7X16TA Enclosed Cargo Trailer, ECT7X16TA

Description: Refer FSA Base Specifications PDF document.

Model Upgrade/Downgrade:

Zone	Rank	Vendor	Price	Build File	Options File
Western	Primary	Texas Trailers Sales and Service	$12,952.00	Build	Options
	Alternate	Federal Contracts LLC DBA Federal Contracts Company	$15,291.00	Build	Options
Northern	Primary	Texas Trailers Sales and Service	$12,302.00	Build	Options
	Alternate	Federal Contracts LLC DBA Federal Contracts Company	$15,291.00	Build	Options
Central	Primary	Texas Trailers Sales and Service	$12,552.00	Build	Options
	Alternate	Federal Contracts LLC DBA Federal Contracts Company	$15,291.00	Build	Options
Southern	Primary	Texas Trailers Sales and Service	$13,052.00	Build	Options
	Alternate	Federal Contracts LLC DBA Federal Contracts Company	$15,291.00	Build	Options

Bid Award

Contract: FSA26-EQU24.0, Equipment

Group: Trailer: Enclosed Cargo Trailer - 7,000 lbs. GVWR

Item: 547, Mission, EZEC7x16, EZEC7x16

Description: Refer FSA Base Specifications PDF document.

Model Upgrade/Downgrade:

Zone	Rank	Vendor	Price	Build File	Options File
Western	Primary	Texas Trailers Sales and Service	$10,863.00	Build	Options
Northern	Primary	Texas Trailers Sales and Service	$10,213.00	Build	Options
Central	Primary	Texas Trailers Sales and Service	$10,463.00	Build	Options
Southern	Primary	Texas Trailers Sales and Service	$10,963.00	Build	Options

Bid Award

Contract: FSA26-EQU24.0, Equipment

Group: Trailer: Enclosed Cargo Trailer - 7,000 lbs. GVWR

Item: 549, Texas Trailers, 7` X 16` Commercial Duty Cargo Trailer, TX7X16TA2

Description: Refer FSA Base Specifications PDF document.

Model Upgrade/Downgrade:

Zone	Rank	Vendor	Price	Build File	Options File
Western	Primary	Texas Trailers Sales and Service	$7,799.00	Build	Options
Northern	Primary	Texas Trailers Sales and Service	$7,149.00	Build	Options
Central	Primary	Texas Trailers Sales and Service	$7,399.00	Build	Options
Southern	Primary	Texas Trailers Sales and Service	$7,899.00	Build	Options

Bid Award

Contract: FSA26-EQU24.0, Equipment

Group: Trailer: Enclosed Cargo Trailer - 7,000 lbs. GVWR

Item: 550, Wells Cargo, HD Wagon, WHD716T2

Description: Refer FSA Base Specifications PDF document.

Model Upgrade/Downgrade:

Zone	Rank	Vendor	Price	Build File	Options File
Western	Primary	Texas Trailers Sales and Service	$15,070.00	Build	Options
Northern	Primary	Texas Trailers Sales and Service	$14,420.00	Build	Options
Central	Primary	Texas Trailers Sales and Service	$14,670.00	Build	Options
Southern	Primary	Texas Trailers Sales and Service	$15,170.00	Build	Options

Bid Award

Contract: FSA26-EQU24.0, Equipment

Group: Trailer: Enclosed Cargo Trailer - 7,000 lbs. GVWR

Item: 671, Kaufman, 7,000 GVWR – 7’ Wide Tandem Axle Cargo Trailer – Deluxe, FEN-2/3.5K-7X16D

Description: Refer FSA Base Specifications PDF document.

Model Upgrade/Downgrade:

Zone	Rank	Vendor	Price	Build File	Options File
Western	Primary	National Equipment Dealers, LLC	$8,488.00	Build	Options
Northern	Primary	National Equipment Dealers, LLC	$8,488.00	Build	Options
Central	Primary	National Equipment Dealers, LLC	$8,488.00	Build	Options
Southern	Primary	National Equipment Dealers, LLC	$8,488.00	Build	Options

Bid Award

Contract: FSA26-EQU24.0, Equipment

Group: Trailer: Fixed Neck Lowboy Trailer - 70,000 lbs. GVWR

Item: 551, Dorsey Trailers, Fixed Neck Lowboy, LB 35-33CS

Description: Refer FSA Base Specifications PDF document.

Model Upgrade/Downgrade:

Zone	Rank	Vendor	Price	Build File	Options File
Western	Primary	DeLand Truck Center, Inc.	$44,650.00	Build	Options
Northern	Primary	DeLand Truck Center, Inc.	$44,850.00	Build	Options
Central	Primary	DeLand Truck Center, Inc.	$44,900.00	Build	Options
Southern	Primary	DeLand Truck Center, Inc.	$44,900.00	Build	Options

Bid Award

Contract: FSA26-EQU24.0, Equipment

Group: Trailer: Fixed Neck Lowboy Trailer - 70,000 lbs. GVWR

Item: 552, Felling, FT-70-2 MX-L, FT-70-2 MX-L

Description: Refer FSA Base Specifications PDF document.

Model Upgrade/Downgrade:

Zone	Rank	Vendor	Price	Build File	Options File
Western	Primary	Federal Contracts LLC DBA Federal Contracts Company	$56,295.00	Build	Options
Northern	Primary	Federal Contracts LLC DBA Federal Contracts Company	$56,295.00	Build	Options
Central	Primary	Federal Contracts LLC DBA Federal Contracts Company	$56,295.00	Build	Options
Southern					

Bid Award

Contract: FSA26-EQU24.0, Equipment

Group: Trailer: Fixed Neck Lowboy Trailer - 70,000 lbs. GVWR

Item: 553, Pitts Trailers, 35-Ton Fixed Neck Lowboy, LB35-33CS

Description: Refer FSA Base Specifications PDF document.

Model Upgrade/Downgrade:

Zone	Rank	Vendor	Price	Build File	Options File
Western	Primary	DeLand Truck Center, Inc.	$44,948.00	Build	Options
Northern	Primary	DeLand Truck Center, Inc.	$44,948.00	Build	Options
Central	Primary	DeLand Truck Center, Inc.	$44,948.00	Build	Options
Southern	Primary	DeLand Truck Center, Inc.	$44,948.00	Build	Options

Bid Award

Contract: FSA26-EQU24.0, Equipment

Group: Trailer: Fixed Neck Lowboy Trailer - 70,000 lbs. GVWR

Item: 672, Towmaster, T-70RG, T-70RG

Description: Refer FSA Base Specifications PDF document.

Model Upgrade/Downgrade:

Zone	Rank	Vendor	Price	Build File	Options File
Western	Primary	Ring Power Corporation	$78,698.00	Build	Options
Northern	Primary	Ring Power Corporation	$78,698.00	Build	Options
Central	Primary	Ring Power Corporation	$78,698.00	Build	Options
Southern					

Bid Award

Contract: FSA26-EQU24.0, Equipment

Group: Trailer: Flatbed Tilt Trailer - 40,000 lbs. GVWR

Item: 555, Behnke, Tag-Style Flatbed Tilt Trailer, FB8X28TPT-40L

Description: Refer FSA Base Specifications PDF document.

Model Upgrade/Downgrade:

Zone	Rank	Vendor	Price	Build File	Options File
Western	Primary	RIGHT TRAILERS, INC.	$41,906.00	Build	Options
Northern	Primary	RIGHT TRAILERS, INC.	$41,506.00	Build	Options
Central	Primary	RIGHT TRAILERS, INC.	$41,206.00	Build	Options
Southern	Primary	RIGHT TRAILERS, INC.	$41,506.00	Build	Options

Bid Award

Contract: FSA26-EQU24.0, Equipment

Group: Trailer: Flatbed Tilt Trailer - 40,000 lbs. GVWR

Item: 673, Econoline, Dual Tandem 20-Ton Tilt, DP2029TA

Description: Refer FSA Base Specifications PDF document.

Model Upgrade/Downgrade:

Zone	Rank	Vendor	Price	Build File	Options File
Western	Primary	DeLand Truck Center, Inc.	$41,621.00	Build	Options
Northern	Primary	DeLand Truck Center, Inc.	$41,621.00	Build	Options
Central	Primary	DeLand Truck Center, Inc.	$41,621.00	Build	Options
Southern	Primary	DeLand Truck Center, Inc.	$41,621.00	Build	Options

Bid Award

Contract: FSA26-EQU24.0, Equipment

Group: Trailer: Flatbed Tilt Trailer - 40,000 lbs. GVWR

Item: 674, Interstate, 40TDL, 40TDL

Description: Refer FSA Base Specifications PDF document.

Model Upgrade/Downgrade:

Zone	Rank	Vendor	Price	Build File	Options File
Western					
Northern					
Central	Primary	Kelly Tractor Co	$35,750.00	Build	Options
Southern	Primary	Kelly Tractor Co	$35,750.00	Build	Options

Bid Award

Contract: FSA26-EQU24.0, Equipment

Group: Trailer: Flatbed Tilt Trailer - 40,000 lbs. GVWR

Item: 675, Towmaster, T-40 T, T-40 T

Description: Refer FSA Base Specifications PDF document.

Model Upgrade/Downgrade:

Zone	Rank	Vendor	Price	Build File	Options File
Western	Primary	Ring Power Corporation	$48,249.00	Build	Options
Northern	Primary	Ring Power Corporation	$48,249.00	Build	Options
Central	Primary	Ring Power Corporation	$48,249.00	Build	Options
Southern					

Bid Award

Contract: FSA26-EQU24.0, Equipment

Group: Trailer: Hydraulic Drop Deck Trailer - 13,500 lbs. GVWR

Item: 556, Air-tow Trailers, Flatbed Model, T14-10

Description: Refer FSA Base Specifications PDF document.

Model Upgrade/Downgrade:

Zone	Rank	Vendor	Price	Build File	Options File
Western	Primary	Texas Trailers Sales and Service	$19,300.00	Build	Options
Northern	Primary	Texas Trailers Sales and Service	$18,650.00	Build	Options
Central	Primary	Texas Trailers Sales and Service	$18,900.00	Build	Options
Southern	Primary	Texas Trailers Sales and Service	$19,400.00	Build	Options

Bid Award

Contract: FSA26-EQU24.0, Equipment

Group: Trailer: Hydraulic Drop Deck Trailer - 13,500 lbs. GVWR

Item: 557, Triple L Trailers, Hydraulic Drop Deck Flatbed Trailer, 1016

Description: Refer FSA Base Specifications PDF document.

Model Upgrade/Downgrade:

Zone	Rank	Vendor	Price	Build File	Options File
Western	Primary	Federal Contracts LLC DBA Federal Contracts Company	$28,124.00	Build	Options
Northern	Primary	Federal Contracts LLC DBA Federal Contracts Company	$28,124.00	Build	Options
Central	Primary	Federal Contracts LLC DBA Federal Contracts Company	$28,124.00	Build	Options
Southern	Primary	Federal Contracts LLC DBA Federal Contracts Company	$28,124.00	Build	Options

Bid Award

Contract: FSA26-EQU24.0, Equipment

Group: Trailer: Hydraulic Drop Deck Trailer - 13,500 lbs. GVWR

Item: 676, Felling, FT-12 EZ-T, FT-12 EZ-T

Description: Refer FSA Base Specifications PDF document.

Model Upgrade/Downgrade:

Zone	Rank	Vendor	Price	Build File	Options File
Western	Primary	Kelly Tractor Co	$24,995.00	Build	Options
Northern	Primary	Kelly Tractor Co	$24,995.00	Build	Options
Central	Primary	Kelly Tractor Co	$23,995.00	Build	Options
Southern	Primary	Kelly Tractor Co	$23,445.00	Build	Options

Bid Award

Contract: FSA26-EQU24.0, Equipment

Group: Trailer: Hydraulic Tail Trailer - 70,000 lbs. GVWR

Item: 561, Towmaster, T-70HT, T-70HT

Description: Refer FSA Base Specifications PDF document.

Model Upgrade/Downgrade:

Zone	Rank	Vendor	Price	Build File	Options File
Western	Primary	Ring Power Corporation	$115,339.00	Build	Options
Northern	Primary	Ring Power Corporation	$115,339.00	Build	Options
Central	Primary	Ring Power Corporation	$115,339.00	Build	Options
Southern	Primary	Kelly Tractor Co	$115,000.00	Build	Options

Bid Award

Contract: FSA26-EQU24.0, Equipment

Group: Trailer: Hydraulic Tail Trailer - 70,000 lbs. GVWR

Item: 562, Trail King, TK80HT, TK80HT

Description: Refer FSA Base Specifications PDF document.

Model Upgrade/Downgrade:

Zone	Rank	Vendor	Price	Build File	Options File
Western	Primary	Alta Construction Equipment Florida, LLC	$110,000.00	Build	Options
Northern	Primary	Alta Construction Equipment Florida, LLC	$110,000.00	Build	Options
Central	Primary	Alta Construction Equipment Florida, LLC	$110,000.00	Build	Options
Southern	Primary	Alta Construction Equipment Florida, LLC	$110,000.00	Build	Options

Bid Award

Contract: FSA26-EQU24.0, Equipment

Group: Trailer: Hydraulic Tail Trailer - 70,000 lbs. GVWR

Item: 563, XL Specialized Trailers, XL 80PT, XL 80PT

Description: Refer FSA Base Specifications PDF document.

Model Upgrade/Downgrade:

Zone	Rank	Vendor	Price	Build File	Options File
Western	Primary	Nationwide Haul LLC	$112,230.00	Build	Options
Northern	Primary	Nationwide Haul LLC	$112,230.00	Build	Options
Central	Primary Alternate	Nationwide Haul LLC Kelly Tractor Co	$112,230.00 $112,425.00	Build Build	Options Options
Southern	Primary Alternate	Kelly Tractor Co Nationwide Haul LLC	$111,425.00 $112,230.00	Build Build	Options Options

Bid Award

Contract: FSA26-EQU24.0, Equipment

Group: Trailer: Leachate Tanker - 6,500 gallons

Item: 564, MAC Trailer, Stainless Steel Leachate Tank, SRX-6500-1-2-NC

Description: Refer FSA Base Specifications PDF document.

Model Upgrade/Downgrade:

Zone	Rank	Vendor	Price	Build File	Options File
Western	Primary	Nationwide Haul LLC	$133,083.00	Build	Options
Northern	Primary	Nationwide Haul LLC	$133,083.00	Build	Options
Central	Primary	Nationwide Haul LLC	$133,083.00	Build	Options
Southern	Primary	Nationwide Haul LLC	$134,083.00	Build	Options

Bid Award

Contract: FSA26-EQU24.0, Equipment

Group: Trailer: Livestock Trailer - 7,000 lbs. GVWR

Item: 565, Delta Trailers, 500ES-16, 500ES-16

Description: Refer FSA Base Specifications PDF document.

Model Upgrade/Downgrade:

Zone	Rank	Vendor	Price	Build File	Options File
Western	Primary	Texas Trailers Sales and Service	$9,480.00	Build	Options
Northern	Primary	Texas Trailers Sales and Service	$8,830.00	Build	Options
Central	Primary	Texas Trailers Sales and Service	$9,080.00	Build	Options
Southern	Primary	Texas Trailers Sales and Service	$9,580.00	Build	Options

Bid Award

Contract: FSA26-EQU24.0, Equipment

Group: Trailer: Livestock Trailer - 7,000 lbs. GVWR

Item: 566, Frontier Trailers, LIV167LITE, LIV167LITE

Description: Refer FSA Base Specifications PDF document.

Model Upgrade/Downgrade:

Zone	Rank	Vendor	Price	Build File	Options File
Western	Primary	Texas Trailers Sales and Service	$16,865.00	Build	Options
	Alternate	RIGHT TRAILERS, INC.	$18,677.00	Build	Options
Northern	Primary	Texas Trailers Sales and Service	$16,215.00	Build	Options
	Alternate	RIGHT TRAILERS, INC.	$18,377.00	Build	Options
Central	Primary	Texas Trailers Sales and Service	$16,465.00	Build	Options
	Alternate	RIGHT TRAILERS, INC.	$18,077.00	Build	Options
Southern	Primary	Texas Trailers Sales and Service	$16,965.00	Build	Options
	Alternate	RIGHT TRAILERS, INC.	$18,377.00	Build	Options

Bid Award

Contract: FSA26-EQU24.0, Equipment

Group: Trailer: Mobile Fuel Trailer - 460 gallons

Item: 568, Boss Trailers, 590 Gallon Fuel Trailer, FT590052

Description: Refer FSA Base Specifications PDF document.

Model Upgrade/Downgrade:

Zone	Rank	Vendor	Price	Build File	Options File
Western	Primary	Texas Trailers Sales and Service	$13,443.00	Build	Options
Northern	Primary	Texas Trailers Sales and Service	$12,793.00	Build	Options
Central	Primary	Texas Trailers Sales and Service	$13,043.00	Build	Options
Southern	Primary	Texas Trailers Sales and Service	$13,543.00	Build	Options

Bid Award

Contract: FSA26-EQU24.0, Equipment

Group: Trailer: Mobile Fuel Trailer - 460 gallons

Item: 569, Thunder Creek, EV500 Fuel Trailer, EV500

Description: Refer FSA Base Specifications PDF document.

Model Upgrade/Downgrade:

Zone	Rank	Vendor	Price	Build File	Options File
Western					
Northern					
Central					
Southern	Primary	Kelly Tractor Co	$15,950.00	Build	Options

Bid Award

Contract: FSA26-EQU24.0, Equipment

Group: Trailer: Multi Tank Fuel/Service 880 gallons Non-Hazmat - 14,000 lbs. GVWR

Item: 570, Thunder Creek, MTT920 Fuel Trailer, MTT920

Description: Refer FSA Base Specifications PDF document.

Model Upgrade/Downgrade:

Zone	Rank	Vendor	Price	Build File	Options File
Western					
Northern					
Central					
Southern	Primary	Kelly Tractor Co	$31,800.00	Build	Options

Bid Award

Contract: FSA26-EQU24.0, Equipment

Group: Trailer: Multi Tank Fuel/Service 880 gallons Non-Hazmat - 14,000 lbs. GVWR

Item: 677, Boss Trailers, Non-Hazmat 880 Gallon Multi Tank Fuel Trailer, MT880072

Description: Refer FSA Base Specifications PDF document.

Model Upgrade/Downgrade:

Zone	Rank	Vendor	Price	Build File	Options File
Western	Primary	Texas Trailers Sales and Service	$28,227.00	Build	Options
Northern	Primary	Texas Trailers Sales and Service	$27,577.00	Build	Options
Central	Primary	Texas Trailers Sales and Service	$27,827.00	Build	Options
Southern	Primary	Texas Trailers Sales and Service	$28,327.00	Build	Options

Bid Award

Contract: FSA26-EQU24.0, Equipment

Group: Trailer: Pothole Patch Unit - 12,000 lbs. GVWR

Item: 571, Falcon, 4-Ton Transporter, 4T1B-D

Description: Refer FSA Base Specifications PDF document.

Model Upgrade/Downgrade:

Zone	Rank	Vendor	Price	Build File	Options File
Western	Primary	Jet-Vac Equipment Company, LLC	$51,600.00	Build	Options
Northern	Primary	Jet-Vac Equipment Company, LLC	$51,600.00	Build	Options
Central	Primary	Jet-Vac Equipment Company, LLC	$51,600.00	Build	Options
Southern	Primary	Jet-Vac Equipment Company, LLC	$51,600.00	Build	Options

Bid Award

Contract: FSA26-EQU24.0, Equipment

Group: Trailer: Pothole Patch Unit - 12,000 lbs. GVWR

Item: 572, Stepp Manufacturing, SPHD, SPHD 2.0

Description: Refer FSA Base Specifications PDF document.

Model Upgrade/Downgrade:

Zone	Rank	Vendor	Price	Build File	Options File
Western	Primary	Southern Sewer Equipment Sales	$57,578.00	Build	Options
Northern	Primary	Southern Sewer Equipment Sales	$57,578.00	Build	Options
Central	Primary	Southern Sewer Equipment Sales	$57,578.00	Build	Options
Southern	Primary	Southern Sewer Equipment Sales	$57,578.00	Build	Options

Bid Award

Contract: FSA26-EQU24.0, Equipment

Group: Trailer: Pressure/Vacuum Trailer - 6,000 gallons

Item: 573, MAC Trailer, Stainless Steel Vac Trailer, SRX-6000-1-NC

Description: Refer FSA Base Specifications PDF document.

Model Upgrade/Downgrade:

Zone	Rank	Vendor	Price	Build File	Options File
Western	Primary	Nationwide Haul LLC	$167,365.00	Build	Options
Northern	Primary	Nationwide Haul LLC	$167,365.00	Build	Options
Central	Primary	Nationwide Haul LLC	$167,365.00	Build	Options
Southern	Primary	Nationwide Haul LLC	$168,365.00	Build	Options

Bid Award

Contract: FSA26-EQU24.0, Equipment

Group: Trailer: Pull Behind Dump Trailer - 14,000 lbs. GVWR

Item: 574, American Made Products, Inc., Dump Trailer, AMP14DP-7T

Description: Refer FSA Base Specifications PDF document.

Model Upgrade/Downgrade:

Zone	Rank	Vendor	Price	Build File	Options File
Western	Primary	DeLand Truck Center, Inc.	$13,600.00	Build	Options
Northern	Primary	DeLand Truck Center, Inc.	$13,300.00	Build	Options
Central	Primary	DeLand Truck Center, Inc.	$13,300.00	Build	Options
Southern	Primary	DeLand Truck Center, Inc.	$13,600.00	Build	Options

Bid Award

Contract: FSA26-EQU24.0, Equipment

Group: Trailer: Pull Behind Dump Trailer - 14,000 lbs. GVWR

Item: 575, Big Tex, 14LP-14, 14LP-14

Description: Refer FSA Base Specifications PDF document.

Model Upgrade/Downgrade:

Zone	Rank	Vendor	Price	Build File	Options File
Western	Primary	Texas Trailers Sales and Service	$10,243.00	Build	Options
Northern	Primary	Texas Trailers Sales and Service	$9,593.00	Build	Options
Central	Primary	Texas Trailers Sales and Service	$9,843.00	Build	Options
Southern	Primary	Texas Trailers Sales and Service	$10,343.00	Build	Options

Bid Award

Contract: FSA26-EQU24.0, Equipment

Group: Trailer: Pull Behind Dump Trailer - 14,000 lbs. GVWR

Item: 576, Down 2 Earth, 7` X 14` Dump 14k GVWR, DTE714DT7B

Description: Refer FSA Base Specifications PDF document.

Model Upgrade/Downgrade:

Zone	Rank	Vendor	Price	Build File	Options File
Western	Primary	Love Power Equipment, Inc	$12,565.00	Build	Options
Northern	Primary	Love Power Equipment, Inc	$12,265.00	Build	Options
Central	Primary	Love Power Equipment, Inc	$12,265.00	Build	Options
Southern	Primary	Love Power Equipment, Inc	$12,265.00	Build	Options

Bid Award

Contract: FSA26-EQU24.0, Equipment

Group: Trailer: Pull Behind Dump Trailer - 14,000 lbs. GVWR

Item: 578, Felling, FT-14 DT HD, FT-14 DT HD

Description: Refer FSA Base Specifications PDF document.

Model Upgrade/Downgrade:

Zone	Rank	Vendor	Price	Build File	Options File
Western	Primary	Federal Contracts LLC DBA Federal Contracts Company	$23,744.00	Build	Options
Northern	Primary	Federal Contracts LLC DBA Federal Contracts Company	$23,744.00	Build	Options
Central	Primary	Federal Contracts LLC DBA Federal Contracts Company	$23,744.00	Build	Options
Southern	Primary	Kelly Tractor Co	$22,425.00	Build	Options

Bid Award

Contract: FSA26-EQU24.0, Equipment

Group: Trailer: Pull Behind Dump Trailer - 14,000 lbs. GVWR

Item: 579, Maxx-D, I-Beam Dump Trailer, DKX-14K 83"

Description: Refer FSA Base Specifications PDF document.

Model Upgrade/Downgrade:

Zone	Rank	Vendor	Price	Build File	Options File
Western	Primary	RIGHT TRAILERS, INC.	$13,379.00	Build	Options
Northern	Primary	RIGHT TRAILERS, INC.	$13,079.00	Build	Options
Central	Primary	RIGHT TRAILERS, INC.	$12,779.00	Build	Options
Southern	Primary	RIGHT TRAILERS, INC.	$13,079.00	Build	Options

Bid Award

Contract: FSA26-EQU24.0, Equipment

Group: Trailer: Pull Behind Dump Trailer - 14,000 lbs. GVWR

Item: 580, Pitts Trailers, 7-Ton High Wall Equipment Trailer, TDH7

Description: Refer FSA Base Specifications PDF document.

Model Upgrade/Downgrade:

Zone	Rank	Vendor	Price	Build File	Options File
Western	Primary	Nationwide Haul LLC	$19,995.00	Build	Options
Northern	Primary	Nationwide Haul LLC	$19,995.00	Build	Options
Central	Primary	Nationwide Haul LLC	$19,995.00	Build	Options
Southern	Primary	Nationwide Haul LLC	$20,995.00	Build	Options

Bid Award

Contract: FSA26-EQU24.0, Equipment

Group: Trailer: Pull Behind Dump Trailer - 14,000 lbs. GVWR

Item: 582, Towmaster, T-12HD, T-12HD

Description: Refer FSA Base Specifications PDF document.

Model Upgrade/Downgrade:

Zone	Rank	Vendor	Price	Build File	Options File
Western					
Northern					
Central					
Southern	Primary	Kelly Tractor Co	$20,150.00	Build	Options

Bid Award

Contract: FSA26-EQU24.0, Equipment

Group: Trailer: Pull Behind Dump Trailer - 14,000 lbs. GVWR

Item: 583, U-Dump, Pro Series, 831414LP

Description: Refer FSA Base Specifications PDF document.

Model Upgrade/Downgrade:

Zone	Rank	Vendor	Price	Build File	Options File
Western	Primary	RIGHT TRAILERS, INC.	$11,263.00	Build	Options
Northern	Primary	RIGHT TRAILERS, INC.	$10,963.00	Build	Options
Central	Primary	RIGHT TRAILERS, INC.	$10,663.00	Build	Options
Southern	Primary	RIGHT TRAILERS, INC.	$10,963.00	Build	Options

Bid Award

Contract: FSA26-EQU24.0, Equipment

Group: Trailer: Pull Behind Dump Trailer - 14,000 lbs. GVWR

Item: 678, Kaufman, 14,000 GVWR Standard Medium Duty Dump Trailer – 14ft x 80in, FXHLP-7K-14S

Description: Refer FSA Base Specifications PDF document.

Model Upgrade/Downgrade:

Zone	Rank	Vendor	Price	Build File	Options File
Western	Primary	National Equipment Dealers, LLC	$11,238.00	Build	Options
Northern	Primary	National Equipment Dealers, LLC	$11,238.00	Build	Options
Central	Primary	National Equipment Dealers, LLC	$11,238.00	Build	Options
Southern	Primary	National Equipment Dealers, LLC	$11,238.00	Build	Options

Bid Award

Contract: FSA26-EQU24.0, Equipment

Group: Trailer: Refrigeration/Freezer Trailer - 7,000 lbs. GVWR

Item: 585, American Made Products, Inc., Cooler Trailer, AMP12CT-3T

Description: Refer FSA Base Specifications PDF document.

Model Upgrade/Downgrade:

Zone	Rank	Vendor	Price	Build File	Options File
Western	Primary	DeLand Truck Center, Inc.	$26,500.00	Build	
Northern	Primary	DeLand Truck Center, Inc.	$26,500.00	Build	
Central	Primary	DeLand Truck Center, Inc.	$26,500.00	Build	
Southern	Primary	DeLand Truck Center, Inc.	$26,500.00	Build	

Bid Award

Contract: FSA26-EQU24.0, Equipment

Group: Trailer: Refrigeration/Freezer Trailer - 7,000 lbs. GVWR

Item: 586, Polar King Mobile Trailers, PKM612, PKM612

Description: Refer FSA Base Specifications PDF document.

Model Upgrade/Downgrade:

Zone	Rank	Vendor	Price	Build File	Options File
Western	Primary	Texas Trailers Sales and Service	$41,181.00	Build	Options
Northern	Primary	Texas Trailers Sales and Service	$40,531.00	Build	Options
Central	Primary	Texas Trailers Sales and Service	$40,781.00	Build	Options
Southern	Primary	Texas Trailers Sales and Service	$41,281.00	Build	Options

Bid Award

Contract: FSA26-EQU24.0, Equipment

Group: Trailer: Restroom Trailer ADA Compliant

Item: 587, Comforts of Home Services, Inc., 3 Station Restroom Trailer, 4303NBCA

Description: Refer FSA Base Specifications PDF document.

Model Upgrade/Downgrade:

Zone	Rank	Vendor	Price	Build File	Options File
Western	Primary	RIGHT TRAILERS, INC.	$77,222.00	Build	Options
Northern	Primary	RIGHT TRAILERS, INC.	$76,922.00	Build	Options
Central	Primary	RIGHT TRAILERS, INC.	$76,622.00	Build	Options
Southern	Primary	RIGHT TRAILERS, INC.	$76,922.00	Build	Options

Bid Award

Contract: FSA26-EQU24.0, Equipment

Group: Trailer: Restroom Trailer ADA Compliant

Item: 588, UltraLav Trailers, ADA+2 Restroom Trailer, WC20-ADA2

Description: Refer FSA Base Specifications PDF document.

Model Upgrade/Downgrade:

Zone	Rank	Vendor	Price	Build File	Options File
Western	Primary	Texas Trailers Sales and Service	$69,400.00	Build	Options
Northern	Primary	Texas Trailers Sales and Service	$68,750.00	Build	Options
Central	Primary	Texas Trailers Sales and Service	$69,000.00	Build	Options
Southern	Primary	Texas Trailers Sales and Service	$69,500.00	Build	Options

Bid Award

Contract: FSA26-EQU24.0, Equipment

Group: Trailer: Sludge Trailer - 80,000 lbs. GVWR

Item: 589, East Manufacturing, Genesis, Frame Dump Trailer

Description: Refer FSA Base Specifications PDF document.

Model Upgrade/Downgrade:

Zone	Rank	Vendor	Price	Build File	Options File
Western	Primary	Rechtien International Trucks	$74,962.00	Build	Options
Northern	Primary	Rechtien International Trucks	$74,962.00	Build	Options
Central	Primary	Rechtien International Trucks	$74,962.00	Build	Options
Southern	Primary	Rechtien International Trucks	$74,962.00	Build	Options

Bid Award

Contract: FSA26-EQU24.0, Equipment

Group: Trailer: Sludge Trailer - 80,000 lbs. GVWR

Item: 590, MAC Trailer, Sludge Trailer, FTEDSP30

Description: Refer FSA Base Specifications PDF document.

Model Upgrade/Downgrade:

Zone	Rank	Vendor	Price	Build File	Options File
Western	Primary	Nationwide Haul LLC	$71,853.00	Build	Options
Northern	Primary	Nationwide Haul LLC	$71,853.00	Build	Options
Central	Primary	Nationwide Haul LLC	$71,853.00	Build	Options
Southern	Primary	Nationwide Haul LLC	$72,853.00	Build	Options

Bid Award

Contract: FSA26-EQU24.0, Equipment

Group: Trailer: Sludge Trailer - 80,000 lbs. GVWR

Item: 679, Ravens by Kruz Inc., Aluminum S&P Dump Trailer, RFA-30-SF

Description: Refer FSA Base Specifications PDF document.

Model Upgrade/Downgrade:

Zone	Rank	Vendor	Price	Build File	Options File
Western	Primary	DeLand Truck Center, Inc.	$74,926.00	Build	Options
Northern	Primary	DeLand Truck Center, Inc.	$74,926.00	Build	Options
Central	Primary	DeLand Truck Center, Inc.	$74,926.00	Build	Options
Southern	Primary	DeLand Truck Center, Inc.	$74,926.00	Build	Options

Bid Award

Contract: FSA26-EQU24.0, Equipment

Group: Trailer: Sludge Trailer - 80,000 lbs. GVWR

Item: 680, Warren Equipment Inc., WRDT-AS, WRDT-AS

Description: Refer FSA Base Specifications PDF document.

Model Upgrade/Downgrade:

Zone	Rank	Vendor	Price	Build File	Options File
Western	Primary	WARREN EQUIPMENT, INC	$63,000.00	Build	
Northern	Primary	WARREN EQUIPMENT, INC	$63,000.00	Build	
Central	Primary	WARREN EQUIPMENT, INC	$63,000.00	Build	
Southern	Primary	WARREN EQUIPMENT, INC	$63,000.00	Build	

Bid Award

Contract: FSA26-EQU24.0, Equipment

Group: Trailer: Sludge Trailer - 80,000 lbs. GVWR

Item: 681, Travis Trailer, Sludge 30ft. Classic S-96, Sludge 30ft. Classic S-96

Description: Refer FSA Base Specifications PDF document.

Model Upgrade/Downgrade:

Zone	Rank	Vendor	Price	Build File	Options File
Western	Primary	TRAVIS BODY & TRAILER INC	$72,095.00	Build	Options
Northern	Primary	TRAVIS BODY & TRAILER INC	$72,695.00	Build	Options
Central	Primary	TRAVIS BODY & TRAILER INC	$73,195.00	Build	Options
Southern	Primary	TRAVIS BODY & TRAILER INC	$73,395.00	Build	Options

Bid Award

Contract: FSA26-EQU24.0, Equipment

Group: Trailer: Utility/Equipment Trailer - 7,000 lbs. GVWR

Item: 591, Big Tex, 70PI-16, 70PI-16

Description: Refer FSA Base Specifications PDF document.

Model Upgrade/Downgrade:

Zone	Rank	Vendor	Price	Build File	Options File
Western	Primary	Texas Trailers Sales and Service	$4,757.00	Build	Options
Northern	Primary	Texas Trailers Sales and Service	$4,107.00	Build	Options
Central	Primary	Texas Trailers Sales and Service	$4,357.00	Build	Options
Southern	Primary	Texas Trailers Sales and Service	$4,857.00	Build	Options

Bid Award

Contract: FSA26-EQU24.0, Equipment

Group: Trailer: Utility/Equipment Trailer - 7,000 lbs. GVWR

Item: 592, Blue Collar Trailers, Utility Trailer, 7x16TA2

Description: Refer FSA Base Specifications PDF document.

Model Upgrade/Downgrade:

Zone	Rank	Vendor	Price	Build File	Options File
Western	Primary	RIGHT TRAILERS, INC.	$5,280.00	Build	Options
Northern	Primary	RIGHT TRAILERS, INC.	$4,980.00	Build	Options
Central	Primary	RIGHT TRAILERS, INC.	$4,680.00	Build	Options
Southern	Primary	RIGHT TRAILERS, INC.	$4,980.00	Build	Options

Bid Award

Contract: FSA26-EQU24.0, Equipment

Group: Trailer: Utility/Equipment Trailer - 7,000 lbs. GVWR

Item: 593, Down 2 Earth, 76" X 16` Landscape/Utility Tandem, DTE7616UT3.5B

Description: Refer FSA Base Specifications PDF document.

Model Upgrade/Downgrade:

Zone	Rank	Vendor	Price	Build File	Options File
Western	Primary	Love Power Equipment, Inc	$4,100.00	Build	Options
	Alternate	Ameri-Recreational Sports, LLC	$5,000.00	Build	Options
Northern	Primary	Love Power Equipment, Inc	$3,900.00	Build	Options
	Alternate	Ameri-Recreational Sports, LLC	$4,600.00	Build	Options
Central	Primary	Love Power Equipment, Inc	$3,900.00	Build	Options
	Alternate	Ameri-Recreational Sports, LLC	$4,300.00	Build	Options
Southern	Primary	Love Power Equipment, Inc	$4,100.00	Build	Options
	Alternate	Ameri-Recreational Sports, LLC	$4,400.00	Build	Options

Bid Award

Contract: FSA26-EQU24.0, Equipment

Group: Trailer: Utility/Equipment Trailer - 7,000 lbs. GVWR

Item: 596, Maxx-D, Tandem Axle Utility Trailer, U3X-7K

Description: Refer FSA Base Specifications PDF document.

Model Upgrade/Downgrade:

Zone	Rank	Vendor	Price	Build File	Options File
Western	Primary	RIGHT TRAILERS, INC.	$6,617.00	Build	Options
Northern	Primary	RIGHT TRAILERS, INC.	$6,317.00	Build	Options
Central	Primary	RIGHT TRAILERS, INC.	$6,017.00	Build	Options
Southern	Primary	RIGHT TRAILERS, INC.	$6,317.00	Build	Options

Bid Award

Contract: FSA26-EQU24.0, Equipment

Group: Trailer: Utility/Equipment Trailer - 7,000 lbs. GVWR

Item: 597, Mission, MLS6.5X16 2.0, MLS6.5X16 2.0

Description: Refer FSA Base Specifications PDF document.

Model Upgrade/Downgrade:

Zone	Rank	Vendor	Price	Build File	Options File
Western	Primary Alternate	Texas Trailers Sales and Service RIGHT TRAILERS, INC.	$6,335.00 $7,058.00	Build Build	Options Options
Northern	Primary Alternate	Texas Trailers Sales and Service RIGHT TRAILERS, INC.	$5,685.00 $6,758.00	Build Build	Options Options
Central	Primary Alternate	Texas Trailers Sales and Service RIGHT TRAILERS, INC.	$5,935.00 $6,458.00	Build Build	Options Options
Southern	Primary Alternate	Texas Trailers Sales and Service RIGHT TRAILERS, INC.	$6,435.00 $6,758.00	Build Build	Options Options

Bid Award

Contract: FSA26-EQU24.0, Equipment

Group: Trailer: Utility/Equipment Trailer - 7,000 lbs. GVWR

Item: 599, Texas Trailers, UT61670GV, UT61670GV

Description: Refer FSA Base Specifications PDF document.

Model Upgrade/Downgrade:

Zone	Rank	Vendor	Price	Build File	Options File
Western	Primary	Texas Trailers Sales and Service	$4,800.00	Build	Options
Northern	Primary	Texas Trailers Sales and Service	$4,150.00	Build	Options
Central	Primary	Texas Trailers Sales and Service	$4,400.00	Build	Options
Southern	Primary	Texas Trailers Sales and Service	$4,900.00	Build	Options

Bid Award

Contract: FSA26-EQU24.0, Equipment

Group: Trailer: Utility/Equipment Trailer - 7,000 lbs. GVWR

Item: 600, Trail King, TK12U, TK12U

Description: Refer FSA Base Specifications PDF document.

Model Upgrade/Downgrade:

Zone	Rank	Vendor	Price	Build File	Options File
Western	Primary	Alta Construction Equipment Florida, LLC	$17,500.00	Build	Options
Northern	Primary	Alta Construction Equipment Florida, LLC	$17,500.00	Build	Options
Central	Primary	Alta Construction Equipment Florida, LLC	$17,500.00	Build	Options
Southern	Primary	Alta Construction Equipment Florida, LLC	$17,500.00	Build	Options

Bid Award

Contract: FSA26-EQU24.0, Equipment

Group: Trailer: Utility/Equipment Trailer - 7,000 lbs. GVWR

Item: 682, Kaufman, Standard Landscape Utility Trailer 7,000 GVWR – 16ft, FB-3.5K-16S

Description: Refer FSA Base Specifications PDF document.

Model Upgrade/Downgrade:

Zone	Rank	Vendor	Price	Build File	Options File
Western	Primary	National Equipment Dealers, LLC	$5,862.00	Build	Options
Northern	Primary	National Equipment Dealers, LLC	$5,862.00	Build	Options
Central	Primary	National Equipment Dealers, LLC	$5,862.00	Build	Options
Southern	Primary	National Equipment Dealers, LLC	$5,862.00	Build	Options

Bid Award

Contract: FSA26-EQU24.0, Equipment

Group: Trailer: Waste Trailer with Walking Floor

Item: 602, MAC Trailer, TNSP48MF, TNSP48MF

Description: Refer FSA Base Specifications PDF document.

Model Upgrade/Downgrade:

Zone	Rank	Vendor	Price	Build File	Options File
Western	Primary	Nationwide Haul LLC	$107,875.00	Build	Options
Northern	Primary	Nationwide Haul LLC	$107,875.00	Build	Options
Central	Primary	Nationwide Haul LLC	$107,875.00	Build	Options
Southern	Primary	Nationwide Haul LLC	$108,875.00	Build	Options

Bid Award

Contract: FSA26-EQU24.0, Equipment

Group: Trailer: Waste Trailer with Walking Floor

Item: 603, Ravens by Kruz Inc., Ravens Live Floor Aluminum S&P Trailer, RALF-48

Description: Refer FSA Base Specifications PDF document.

Model Upgrade/Downgrade:

Zone	Rank	Vendor	Price	Build File	Options File
Western	Primary	DeLand Truck Center, Inc.	$116,614.00	Build	Options
Northern	Primary	DeLand Truck Center, Inc.	$116,614.00	Build	Options
Central	Primary	DeLand Truck Center, Inc.	$116,614.00	Build	Options
Southern	Primary	DeLand Truck Center, Inc.	$116,614.00	Build	Options

Bid Award

Contract: FSA26-EQU24.0, Equipment

Group: Trailer: Waste Trailer with Walking Floor

Item: 604, Steco, AW048102, AW048102

Description: Refer FSA Base Specifications PDF document.

Model Upgrade/Downgrade:

Zone	Rank	Vendor	Price	Build File	Options File
Western	Primary	DeLand Truck Center, Inc.	$119,761.00	Build	Options
Northern	Primary	DeLand Truck Center, Inc.	$119,761.00	Build	Options
Central	Primary	DeLand Truck Center, Inc.	$119,761.00	Build	Options
Southern	Primary	DeLand Truck Center, Inc.	$119,761.00	Build	Options

Bid Award

Contract: FSA26-EQU24.0, Equipment

Group: Trailer: Waste Trailer with Walking Floor

Item: 605, Travis Trailer, TT/WF Classic, TT/WF Classic 48x102

Description: Refer FSA Base Specifications PDF document.

Model Upgrade/Downgrade:

Zone	Rank	Vendor	Price	Build File	Options File
Western	Primary	TRAVIS BODY & TRAILER INC	$105,498.00	Build	Options
Northern	Primary	TRAVIS BODY & TRAILER INC	$106,098.00	Build	Options
Central	Primary	TRAVIS BODY & TRAILER INC	$106,598.00	Build	Options
Southern	Primary	TRAVIS BODY & TRAILER INC	$106,798.00	Build	Options

Bid Award

Contract: FSA26-EQU24.0, Equipment

Group: Trailer: Waste Trailer with Walking Floor

Item: 606, Warren Equipment Inc., WMFT-AS, WMFT-AS-48102

Description: Refer FSA Base Specifications PDF document.

Model Upgrade/Downgrade:

Zone	Rank	Vendor	Price	Build File	Options File
Western	Primary	WARREN EQUIPMENT, INC	$110,000.00	Build	Options
Northern	Primary	WARREN EQUIPMENT, INC	$110,000.00	Build	Options
Central	Primary	WARREN EQUIPMENT, INC	$110,000.00	Build	Options
Southern	Primary	WARREN EQUIPMENT, INC	$110,000.00	Build	Options

Bid Award

Contract: FSA26-EQU24.0, Equipment

Group: Transfer Switch: 600 Amp Automatic Transfer Switch

Item: 607, ABB, ATS 600A 480V N3R Delayed Transition, TAB600-FS

Description: Refer FSA Base Specifications PDF document.

Model Upgrade/Downgrade:

Zone	Rank	Vendor	Price	Build File	Options File
Western	Primary	Tradewinds Power Corp.	$20,497.00	Build	Options
Northern	Primary	Tradewinds Power Corp.	$20,497.00	Build	Options
Central	Primary	Tradewinds Power Corp.	$20,497.00	Build	Options
Southern	Primary	Tradewinds Power Corp.	$20,497.00	Build	Options

Bid Award

Contract: FSA26-EQU24.0, Equipment

Group: Transfer Switch: 600 Amp Automatic Transfer Switch

Item: 608, ASCO, Series 300, Series 300

Description: Refer FSA Base Specifications PDF document.

Model Upgrade/Downgrade:

Zone	Rank	Vendor	Price	Build File	Options File
Western	Primary	MID-FLORIDA DIESEL INC	$6,190.00	Build	Options
	Alternate	ACF Industrial Energy	$7,040.00	Build	Options
	Alternate	Ring Power Corporation	$11,500.00	Build	Options
Northern	Primary	MID-FLORIDA DIESEL INC	$6,190.00	Build	Options
	Alternate	ACF Industrial Energy	$7,040.00	Build	Options
	Alternate	Ring Power Corporation	$11,500.00	Build	Options
Central	Primary	MID-FLORIDA DIESEL INC	$6,190.00	Build	Options
	Alternate	ACF Industrial Energy	$7,040.00	Build	Options
	Alternate	Ring Power Corporation	$11,500.00	Build	Options
Southern	Primary	MID-FLORIDA DIESEL INC	$6,190.00	Build	Options
	Alternate	ACF Industrial Energy	$7,040.00	Build	Options
	Alternate	Tradewinds Power Corp.	$15,628.00	Build	Options

Bid Award

Contract: FSA26-EQU24.0, Equipment

Group: Transfer Switch: 600 Amp Automatic Transfer Switch

Item: 609, Caterpillar, CG, CG

Description: Refer FSA Base Specifications PDF document.

Model Upgrade/Downgrade:

Zone	Rank	Vendor	Price	Build File	Options File
Western	Primary	Ring Power Corporation	$11,800.00	Build	Options
Northern	Primary	Ring Power Corporation	$11,800.00	Build	Options
Central	Primary	Ring Power Corporation	$11,800.00	Build	Options
Southern					

Bid Award

Contract: FSA26-EQU24.0, Equipment

Group: Transfer Switch: 600 Amp Automatic Transfer Switch

Item: 610, EATON, ATS 600A 480V N3R Delayed Transition, TCH600-FS

Description: Refer FSA Base Specifications PDF document.

Model Upgrade/Downgrade:

Zone	Rank	Vendor	Price	Build File	Options File
Western	Primary	Tradewinds Power Corp.	$17,273.00	Build	Options
Northern	Primary	Tradewinds Power Corp.	$17,273.00	Build	Options
Central	Primary	Tradewinds Power Corp.	$17,273.00	Build	Options
Southern	Primary	Tradewinds Power Corp.	$17,273.00	Build	Options

Bid Award

Contract: FSA26-EQU24.0, Equipment

Group: Transfer Switch: 600 Amp Automatic Transfer Switch

Item: 611, Generac, TX/PSTS-600, TX/PSTS-600

Description: Refer FSA Base Specifications PDF document.

Model Upgrade/Downgrade:

Zone	Rank	Vendor	Price	Build File	Options File
Western	Primary	ACF Industrial Energy	$8,675.00	Build	Options
Northern	Primary	ACF Industrial Energy	$8,675.00	Build	Options
Central	Primary	ACF Industrial Energy	$8,675.00	Build	Options
Southern					

Bid Award

Contract: FSA26-EQU24.0, Equipment

Group: Transfer Switch: 600 Amp Automatic Transfer Switch

Item: 612, Thomson, Auto Transfer Switch, TS 870

Description: Refer FSA Base Specifications PDF document.

Model Upgrade/Downgrade:

Zone	Rank	Vendor	Price	Build File	Options File
Western	Primary	Tradewinds Power Corp.	$13,085.00	Build	Options
Northern	Primary	Tradewinds Power Corp.	$13,085.00	Build	Options
Central	Primary	Tradewinds Power Corp.	$13,085.00	Build	Options
Southern	Primary	Tradewinds Power Corp.	$13,058.00	Build	Options

Bid Award

Contract: FSA26-EQU24.0, Equipment

Group: Trencher: Tractor Type

Item: 613, Vermeer, Ride-On Trencher, RTX750

Description: Refer FSA Base Specifications PDF document.

Model Upgrade/Downgrade:

Zone	Rank	Vendor	Price	Build File	Options File
Western	Primary	Vermeer Southeast Sales	$142,404.00	Build	Options
Northern	Primary	Vermeer Southeast Sales	$142,404.00	Build	Options
Central	Primary	Vermeer Southeast Sales	$142,404.00	Build	Options
Southern	Primary	Vermeer Southeast Sales	$142,404.00	Build	Options

Bid Award

Contract: FSA26-EQU24.0, Equipment

Group: Trencher: Walk Behind Trencher

Item: 614, Vermeer, RTX250, RTX250

Description: Refer FSA Base Specifications PDF document.

Model Upgrade/Downgrade:

Zone	Rank	Vendor	Price	Build File	Options File
Western	Primary	Vermeer Southeast Sales	$25,324.00	Build	Options
Northern	Primary	Vermeer Southeast Sales	$25,324.00	Build	Options
Central	Primary	Vermeer Southeast Sales	$25,324.00	Build	Options
Southern	Primary	Vermeer Southeast Sales	$25,324.00	Build	Options

Bid Award

Contract: FSA26-EQU24.0, Equipment

Group: Underground Locating Equipment: Ground Penetrating Radar

Item: 616, US Radar, Quantaum Imager, Q4300

Description: Refer FSA Base Specifications PDF document.

Model Upgrade/Downgrade:

Zone	Rank	Vendor	Price	Build File	Options File
Western	Primary	Vermeer Southeast Sales	$24,615.00	Build	Options
Northern	Primary	Vermeer Southeast Sales	$24,615.00	Build	Options
Central	Primary	Vermeer Southeast Sales	$24,615.00	Build	Options
Southern	Primary	Vermeer Southeast Sales	$24,615.00	Build	Options

Bid Award

Contract: FSA26-EQU24.0, Equipment

Group: Underground Locating Equipment: Utility Locator

Item: 617, Vermeer, Verifier G-3, G-3

Description: Refer FSA Base Specifications PDF document.

Model Upgrade/Downgrade:

Zone	Rank	Vendor	Price	Build File	Options File
Western	Primary	Vermeer Southeast Sales	$6,222.00	Build	Options
Northern	Primary	Vermeer Southeast Sales	$6,222.00	Build	Options
Central	Primary	Vermeer Southeast Sales	$6,222.00	Build	Options
Southern	Primary	Vermeer Southeast Sales	$6,222.00	Build	Options

Bid Award

Contract: FSA26-EQU24.0, Equipment

Group: Vehicle Lift: Above Ground - 2 Post Asymmetric Stationary Vehicle Lift 10k

Item: 619, Challenger, SA10, SA10

Description: Refer FSA Base Specifications PDF document.

Model Upgrade/Downgrade:

Zone	Rank	Vendor	Price	Build File	Options File
Western	Primary	JOBBERS EQUIPMENT WAREHOUSE INC	$6,879.00	Build	Options
Northern	Primary	JOBBERS EQUIPMENT WAREHOUSE INC	$6,879.00	Build	Options
Central	Primary	JOBBERS EQUIPMENT WAREHOUSE INC	$6,879.00	Build	Options
Southern	Primary	JOBBERS EQUIPMENT WAREHOUSE INC	$6,879.00	Build	Options

Bid Award

Contract: FSA26-EQU24.0, Equipment

Group: Vehicle Lift: Above Ground - 2 Post Symmetric Stationary Vehicle Lift 12k

Item: 621, Challenger, CL12A-LC, CL12A-LC

Description: Refer FSA Base Specifications PDF document.

Model Upgrade/Downgrade:

Zone	Rank	Vendor	Price	Build File	Options File
Western	Primary	JOBBERS EQUIPMENT WAREHOUSE INC	$14,054.00	Build	Options
Northern	Primary	JOBBERS EQUIPMENT WAREHOUSE INC	$14,054.00	Build	Options
Central	Primary	JOBBERS EQUIPMENT WAREHOUSE INC	$14,054.00	Build	Options
Southern	Primary	JOBBERS EQUIPMENT WAREHOUSE INC	$14,054.00	Build	Options

Bid Award

Contract: FSA26-EQU24.0, Equipment

Group: Vehicle Lift: Above Ground - 2 Post Symmetric Stationary Vehicle Lift 15k

Item: 622, Challenger, CL16-3S, CL16-3S

Description: Refer FSA Base Specifications PDF document.

Model Upgrade/Downgrade:

Zone	Rank	Vendor	Price	Build File	Options File
Western	Primary	JOBBERS EQUIPMENT WAREHOUSE INC	$29,465.00	Build	Options
Northern	Primary	JOBBERS EQUIPMENT WAREHOUSE INC	$29,465.00	Build	Options
Central	Primary	JOBBERS EQUIPMENT WAREHOUSE INC	$29,465.00	Build	Options
Southern	Primary	JOBBERS EQUIPMENT WAREHOUSE INC	$29,465.00	Build	Options

Bid Award

Contract: FSA26-EQU24.0, Equipment

Group: Vehicle Lift: Above Ground - 2 Post Symmetric Stationary Vehicle Lift 18k

Item: 625, Challenger, CL20, CL20

Description: Refer FSA Base Specifications PDF document.

Model Upgrade/Downgrade:

Zone	Rank	Vendor	Price	Build File	Options File
Western	Primary	JOBBERS EQUIPMENT WAREHOUSE INC	$35,699.00	Build	Options
Northern	Primary	JOBBERS EQUIPMENT WAREHOUSE INC	$35,699.00	Build	Options
Central	Primary	JOBBERS EQUIPMENT WAREHOUSE INC	$35,699.00	Build	Options
Southern	Primary	JOBBERS EQUIPMENT WAREHOUSE INC	$35,699.00	Build	Options

Bid Award

Contract: FSA26-EQU24.0, Equipment

Group: Vehicle Lift: Above Ground - 2 Post Versymmetric Stationary Vehicle Lift 10k

Item: 628, Challenger, CL10V3, CL10V3

Description: Refer FSA Base Specifications PDF document.

Model Upgrade/Downgrade:

Zone	Rank	Vendor	Price	Build File	Options File
Western	Primary	JOBBERS EQUIPMENT WAREHOUSE INC	$9,124.00	Build	Options
Northern	Primary	JOBBERS EQUIPMENT WAREHOUSE INC	$9,124.00	Build	Options
Central	Primary	JOBBERS EQUIPMENT WAREHOUSE INC	$9,124.00	Build	Options
Southern	Primary	JOBBERS EQUIPMENT WAREHOUSE INC	$9,124.00	Build	Options

Bid Award

Contract: FSA26-EQU24.0, Equipment

Group: Vehicle Lift: Above Ground - 4 Column, Alignment Lift with Front/Rear Jacks and Integrated Turntables and Slip Plates 14k

Item: 629, Challenger, AR4115XAO, AR4115XAO

Description: Refer FSA Base Specifications PDF document.

Model Upgrade/Downgrade:

Zone	Rank	Vendor	Price	Build File	Options File
Western	Primary	JOBBERS EQUIPMENT WAREHOUSE INC	$37,771.00	Build	Options
Northern	Primary	JOBBERS EQUIPMENT WAREHOUSE INC	$37,771.00	Build	Options
Central	Primary	JOBBERS EQUIPMENT WAREHOUSE INC	$37,771.00	Build	Options
Southern	Primary	JOBBERS EQUIPMENT WAREHOUSE INC	$37,771.00	Build	Options

Bid Award

Contract: FSA26-EQU24.0, Equipment

Group: Vehicle Lift: Above Ground - 4 Post Alignment Lift with Turnplates and Rolling Jack 30k

Item: 631, Challenger, 4030 Series, 4030EFX

Description: Refer FSA Base Specifications PDF document.

Model Upgrade/Downgrade:

Zone	Rank	Vendor	Price	Build File	Options File
Western	Primary	JOBBERS EQUIPMENT WAREHOUSE INC	$77,076.00	Build	Options
Northern	Primary	JOBBERS EQUIPMENT WAREHOUSE INC	$77,076.00	Build	Options
Central	Primary	JOBBERS EQUIPMENT WAREHOUSE INC	$77,076.00	Build	Options
Southern	Primary	JOBBERS EQUIPMENT WAREHOUSE INC	$77,076.00	Build	Options

Bid Award

Contract: FSA26-EQU24.0, Equipment

Group: Vehicle Lift: Above Ground Drive On Platform Lift, Pantograph Type

Item: 633, ARI-HETRA, HDPL Drive-On Platform Lift, HDPL-77-30

Description: Refer FSA Base Specifications PDF document.

Model Upgrade/Downgrade:

Zone	Rank	Vendor	Price	Build File	Options File
Western	Primary	ARI Phoenix, Inc.	$153,668.00	Build	Options
Northern	Primary	ARI Phoenix, Inc.	$153,668.00	Build	Options
Central	Primary	ARI Phoenix, Inc.	$153,668.00	Build	Options
Southern	Primary	ARI Phoenix, Inc.	$153,668.00	Build	Options

Bid Award

Contract: FSA26-EQU24.0, Equipment

Group: Vehicle Lift: In Ground Drive On Platform Lift, Scissor Type

Item: 634, ARI-HETRA, HDXL Drive-On Scissor Lift, HDXL-912

Description: Refer FSA Base Specifications PDF document.

Model Upgrade/Downgrade:

Zone	Rank	Vendor	Price	Build File	Options File
Western	Primary	ARI Phoenix, Inc.	$123,790.00	Build	Options
Northern	Primary	ARI Phoenix, Inc.	$123,790.00	Build	Options
Central	Primary	ARI Phoenix, Inc.	$123,790.00	Build	Options
Southern	Primary	ARI Phoenix, Inc.	$123,790.00	Build	Options

Bid Award

Contract: FSA26-EQU24.0, Equipment

Group: Vehicle Lift: Mobile - 2 Column, Cabled

Item: 635, ARI-HETRA, LP-10-2-AJ, LP-10-2-AJ

Description: Refer FSA Base Specifications PDF document.

Model Upgrade/Downgrade:

Zone	Rank	Vendor	Price	Build File	Options File
Western	Primary	ARI Phoenix, Inc.	$29,115.00	Build	Options
Northern	Primary	ARI Phoenix, Inc.	$29,115.00	Build	Options
Central	Primary	ARI Phoenix, Inc.	$29,115.00	Build	Options
Southern	Primary	ARI Phoenix, Inc.	$29,115.00	Build	Options

Bid Award

Contract: FSA26-EQU24.0, Equipment

Group: Vehicle Lift: Mobile - 2 Column, Cabled

Item: 636, Stertil-Koni, ST-1085-1FSA, ST-1085-1FSA

Description: Refer FSA Base Specifications PDF document.

Model Upgrade/Downgrade:

Zone	Rank	Vendor	Price	Build File	Options File
Western	Primary	Federal Contracts LLC DBA Federal Contracts Company	$39,140.00	Build	Options
Northern	Primary	Federal Contracts LLC DBA Federal Contracts Company	$39,140.00	Build	Options
Central	Primary	Federal Contracts LLC DBA Federal Contracts Company	$39,140.00	Build	Options
Southern	Primary	Federal Contracts LLC DBA Federal Contracts Company	$39,140.00	Build	Options

Bid Award

Contract: FSA26-EQU24.0, Equipment

Group: Vehicle Lift: Mobile - 2 Column, Wireless

Item: 637, ARI-HETRA, BPW-10-2-AJ, BPW-10-2-AJ

Description: Refer FSA Base Specifications PDF document.

Model Upgrade/Downgrade:

Zone	Rank	Vendor	Price	Build File	Options File
Western	Primary	ARI Phoenix, Inc.	$29,948.00	Build	Options
Northern	Primary	ARI Phoenix, Inc.	$29,948.00	Build	Options
Central	Primary	ARI Phoenix, Inc.	$29,948.00	Build	Options
Southern	Primary	ARI Phoenix, Inc.	$29,948.00	Build	Options

Bid Award

Contract: FSA26-EQU24.0, Equipment

Group: Vehicle Lift: Mobile - 2 Column, Wireless

Item: 638, Challenger, CLHM-190-2, CLHM-190-2

Description: Refer FSA Base Specifications PDF document.

Model Upgrade/Downgrade:

Zone	Rank	Vendor	Price	Build File	Options File
Western	Primary	JOBBERS EQUIPMENT WAREHOUSE INC	$30,441.00	Build	Options
Northern	Primary	JOBBERS EQUIPMENT WAREHOUSE INC	$30,441.00	Build	Options
Central	Primary	JOBBERS EQUIPMENT WAREHOUSE INC	$30,441.00	Build	Options
Southern	Primary	JOBBERS EQUIPMENT WAREHOUSE INC	$30,441.00	Build	Options

Bid Award

Contract: FSA26-EQU24.0, Equipment

Group: Vehicle Lift: Mobile - 2 Column, Wireless

Item: 639, Stertil-Koni, ST-1085-1FWA, ST-1085-1FWA

Description: Refer FSA Base Specifications PDF document.

Model Upgrade/Downgrade:

Zone	Rank	Vendor	Price	Build File	Options File
Western	Primary	Federal Contracts LLC DBA Federal Contracts Company	$44,317.00	Build	Options
Northern	Primary	Federal Contracts LLC DBA Federal Contracts Company	$44,317.00	Build	Options
Central	Primary	Federal Contracts LLC DBA Federal Contracts Company	$44,317.00	Build	Options
Southern	Primary	Federal Contracts LLC DBA Federal Contracts Company	$44,317.00	Build	Options

Bid Award

Contract: FSA26-EQU24.0, Equipment

Group: Vehicle Lift: Mobile - 4 Column, Cabled

Item: 640, ARI-HETRA, LP-10-4-AJ, LP-10-4-AJ

Description: Refer FSA Base Specifications PDF document.

Model Upgrade/Downgrade:

Zone	Rank	Vendor	Price	Build File	Options File
Western	Primary	ARI Phoenix, Inc.	$57,329.00	Build	Options
Northern	Primary	ARI Phoenix, Inc.	$57,329.00	Build	Options
Central	Primary	ARI Phoenix, Inc.	$57,329.00	Build	Options
Southern	Primary	ARI Phoenix, Inc.	$57,329.00	Build	Options

Bid Award

Contract: FSA26-EQU24.0, Equipment

Group: Vehicle Lift: Mobile - 4 Column, Cabled

Item: 641, Stertil-Koni, ST-1085-2FSA, ST-1085-2FSA

Description: Refer FSA Base Specifications PDF document.

Model Upgrade/Downgrade:

Zone	Rank	Vendor	Price	Build File	Options File
Western	Primary	Federal Contracts LLC DBA Federal Contracts Company	$73,217.00	Build	Options
Northern	Primary	Federal Contracts LLC DBA Federal Contracts Company	$73,217.00	Build	Options
Central	Primary	Federal Contracts LLC DBA Federal Contracts Company	$73,217.00	Build	Options
Southern	Primary	Federal Contracts LLC DBA Federal Contracts Company	$73,217.00	Build	Options

Bid Award

Contract: FSA26-EQU24.0, Equipment

Group: Vehicle Lift: Mobile - 4 Column, Wireless

Item: 642, ARI-HETRA, BPW-10-4-AJ, BPW-10-4-AJ

Description: Refer FSA Base Specifications PDF document.

Model Upgrade/Downgrade:

Zone	Rank	Vendor	Price	Build File	Options File
Western	Primary	ARI Phoenix, Inc.	$60,570.00	Build	Options
Northern	Primary	ARI Phoenix, Inc.	$60,570.00	Build	Options
Central	Primary	ARI Phoenix, Inc.	$60,570.00	Build	Options
Southern	Primary	ARI Phoenix, Inc.	$60,570.00	Build	Options

Bid Award

Contract: FSA26-EQU24.0, Equipment

Group: Vehicle Lift: Mobile - 4 Column, Wireless

Item: 643, Challenger, CLHM-190-4, CLHM-190-4

Description: Refer FSA Base Specifications PDF document.

Model Upgrade/Downgrade:

Zone	Rank	Vendor	Price	Build File	Options File
Western	Primary	JOBBERS EQUIPMENT WAREHOUSE INC	$60,882.00	Build	Options
Northern	Primary	JOBBERS EQUIPMENT WAREHOUSE INC	$60,882.00	Build	Options
Central	Primary	JOBBERS EQUIPMENT WAREHOUSE INC	$60,882.00	Build	Options
Southern	Primary	JOBBERS EQUIPMENT WAREHOUSE INC	$60,882.00	Build	Options

Bid Award

Contract: FSA26-EQU24.0, Equipment

Group: Vehicle Lift: Mobile - 4 Column, Wireless

Item: 644, Stertil-Koni, ST-1085-2FWA, ST-1085-2FWA

Description: Refer FSA Base Specifications PDF document.

Model Upgrade/Downgrade:

Zone	Rank	Vendor	Price	Build File	Options File
Western	Primary	Federal Contracts LLC DBA Federal Contracts Company	$85,610.00	Build	Options
Northern	Primary	Federal Contracts LLC DBA Federal Contracts Company	$85,610.00	Build	Options
Central	Primary	Federal Contracts LLC DBA Federal Contracts Company	$85,610.00	Build	Options
Southern	Primary	Federal Contracts LLC DBA Federal Contracts Company	$85,610.00	Build	Options

Bid Award

Contract: FSA26-EQU24.0, Equipment

Group: Vehicle Lift: Mobile - 6 Column, Cabled

Item: 645, ARI-HETRA, LP-10-6-AJ, LP-10-6-AJ

Description: Refer FSA Base Specifications PDF document.

Model Upgrade/Downgrade:

Zone	Rank	Vendor	Price	Build File	Options File
Western	Primary	ARI Phoenix, Inc.	$85,544.00	Build	Options
Northern	Primary	ARI Phoenix, Inc.	$85,544.00	Build	Options
Central	Primary	ARI Phoenix, Inc.	$85,544.00	Build	Options
Southern	Primary	ARI Phoenix, Inc.	$85,544.00	Build	Options

Bid Award

Contract: FSA26-EQU24.0, Equipment

Group: Vehicle Lift: Mobile - 6 Column, Cabled

Item: 646, Stertil-Koni, ST-1085-3FSA, ST-1085-3FSA

Description: Refer FSA Base Specifications PDF document.

Model Upgrade/Downgrade:

Zone	Rank	Vendor	Price	Build File	Options File
Western	Primary	Federal Contracts LLC DBA Federal Contracts Company	$107,287.00	Build	Options
Northern	Primary	Federal Contracts LLC DBA Federal Contracts Company	$107,287.00	Build	Options
Central	Primary	Federal Contracts LLC DBA Federal Contracts Company	$107,287.00	Build	Options
Southern	Primary	Federal Contracts LLC DBA Federal Contracts Company	$107,287.00	Build	Options

Bid Award

Contract: FSA26-EQU24.0, Equipment

Group: Vehicle Lift: Mobile - 6 Column, Wireless

Item: 647, ARI-HETRA, BPW-10-6-AJ, BPW-10-6-AJ

Description: Refer FSA Base Specifications PDF document.

Model Upgrade/Downgrade:

Zone	Rank	Vendor	Price	Build File	Options File
Western	Primary	ARI Phoenix, Inc.	$90,861.00	Build	Options
Northern	Primary	ARI Phoenix, Inc.	$90,861.00	Build	Options
Central	Primary	ARI Phoenix, Inc.	$90,861.00	Build	Options
Southern	Primary	ARI Phoenix, Inc.	$90,861.00	Build	Options

Bid Award

Contract: FSA26-EQU24.0, Equipment

Group: Vehicle Lift: Mobile - 6 Column, Wireless

Item: 648, Challenger, CLHM-190-6, CLHM-190-6

Description: Refer FSA Base Specifications PDF document.

Model Upgrade/Downgrade:

Zone	Rank	Vendor	Price	Build File	Options File
Western	Primary	JOBBERS EQUIPMENT WAREHOUSE INC	$91,323.00	Build	Options
Northern	Primary	JOBBERS EQUIPMENT WAREHOUSE INC	$91,323.00	Build	Options
Central	Primary	JOBBERS EQUIPMENT WAREHOUSE INC	$91,323.00	Build	Options
Southern	Primary	JOBBERS EQUIPMENT WAREHOUSE INC	$91,323.00	Build	Options

Bid Award

Contract: FSA26-EQU24.0, Equipment

Group: Vehicle Lift: Mobile - 6 Column, Wireless

Item: 649, Stertil-Koni, ST-1085-3FWA, ST-1085-3FWA

Description: Refer FSA Base Specifications PDF document.

Model Upgrade/Downgrade:

Zone	Rank	Vendor	Price	Build File	Options File
Western	Primary	Federal Contracts LLC DBA Federal Contracts Company	$126,904.00	Build	Options
Northern	Primary	Federal Contracts LLC DBA Federal Contracts Company	$126,904.00	Build	Options
Central	Primary	Federal Contracts LLC DBA Federal Contracts Company	$126,904.00	Build	Options
Southern	Primary	Federal Contracts LLC DBA Federal Contracts Company	$126,904.00	Build	Options

Bid Award

Contract: FSA26-EQU24.0, Equipment

Group: Vehicle Lift: Mobile - 8 Column, Wireless

Item: 650, ARI-HETRA, BPW-10-8-AJ, BPW-10-8-AJ

Description: Refer FSA Base Specifications PDF document.

Model Upgrade/Downgrade:

Zone	Rank	Vendor	Price	Build File	Options File
Western	Primary	ARI Phoenix, Inc.	$121,139.00	Build	Options
Northern	Primary	ARI Phoenix, Inc.	$121,139.00	Build	Options
Central	Primary	ARI Phoenix, Inc.	$121,139.00	Build	Options
Southern	Primary	ARI Phoenix, Inc.	$121,139.00	Build	Options

Bid Award

Contract: FSA26-EQU24.0, Equipment

Group: Vehicle Lift: Mobile - 8 Column, Wireless

Item: 651, Challenger, CLHM-190-8, CLHM-190-8

Description: Refer FSA Base Specifications PDF document.

Model Upgrade/Downgrade:

Zone	Rank	Vendor	Price	Build File	Options File
Western	Primary	JOBBERS EQUIPMENT WAREHOUSE INC	$121,764.00	Build	Options
Northern	Primary	JOBBERS EQUIPMENT WAREHOUSE INC	$121,764.00	Build	Options
Central	Primary	JOBBERS EQUIPMENT WAREHOUSE INC	$121,764.00	Build	Options
Southern	Primary	JOBBERS EQUIPMENT WAREHOUSE INC	$121,764.00	Build	Options

FSA Cooperative Purchasing Program



FSA26-EQU24.0: Equipment Terms and Conditions

Contents

1.0 GENERAL CONDITIONS 5
1.01 BID CORRESPONDENCE 5
1.02 PURPOSE 5
1.03 TERM OF CONTRACT 5
1.04 JURISDICTION 5
1.05 SHERIFF AS COUNTY CONSTITUTIONAL OFFICER 6
1.06 FUNDING 6
1.07 CURRENCY 6
1.08 GENERAL DEFINITION 6
1.09 ELIGIBLE PURCHASERS OF CONTRACT 8
1.10 LEGAL REQUIREMENTS 8
1.11 PATENTS & ROYALTIES 9
1.12 FEDERAL AND STATE STANDARDS 9
1.13 UNDERWRITERS' LABORATORIES 9
1.14 AMERICANS WITH DISABILITIES ACT 10
1.15 REASONABLE ACCOMMODATION 10
1.16 DISADVANTAGED BUSINESSES 10
1.17 ANTI-DISCRIMINATION, E-VERIFY, AND ANTI-HUMAN TRAFFICKING REQUIREMENTS 10
1.18 BEST COMMERCIAL PRACTICES 11
1.19 PUBLIC ENTITY CRIMES ("PEC") AND SCRUTINIZED COMPANIES STATEMENTS 11
1.20 TAX EXEMPTION 12
1.21 ORDER OF PRECEDENCE IN THE EVENT OF CONFLICT 12
1.22 COMMUNICATIONS 12
1.23 CLARIFICATION AND ADDENDA 13
1.24 SIGNED BID CONSIDERED AN OFFER 13
1.25 ASSIGNMENT OF CONTRACT 13
1.26 TERMINATION OF PRODUCT LINE 14
1.27 DEMONSTRATION OF COMPETENCY 14
1.28 VENDOR ABILITY TO PERFORM 14
1.29 FINANCIAL RESPONSIBILITY 15
1.30 QUALITY AND SAFETY 15
1.31 NONCONFORMANCE 16
1.32 GRATUITIES 16
1.33 NEUTRALITY 16

1.34 TIE BIDS 16
1.35 RIGHT TO AUDIT 17
1.37 PERFORMANCE BONDS 18
1.38 ELIMINATION FROM CONSIDERATION 18
1.39 INDEPENDENT PREPARATION 18
1.40 DEFAULT 19
1.41 PROTESTS AND ARBITRATION 19
1.42 NONPERFORMANCE 20
1.43 SEVERABILITY 21
1.44 TERMINATION FOR CAUSE 21
1.45 TERMINATION WITHOUT CAUSE 22
1.46 CONTRACT ADVERTISEMENT AND USE OF THE FSA CPP LOGO 22
2.0 BIDDER INSTRUCTIONS 23
2.01 QUALIFICATION 23
2.02 LICENSING AND FACILITIES 23
2.03 INSURANCE AND INDEMNIFICATION 24
2.04 SPECIFICATIONS 26
2.05 SEALED BIDS 26
2.06 MISTAKES 27
2.07 EXCEPTIONS 27
2.08 EQUIVALENTS 27
2.09 MANDATORY PRE-BID MEETING 27
2.10 PRICES QUOTED 27
2.11 OPTION PRICING 28
2.12 BID SUBMISSION 29
2.13 ZONE BIDDING 30
2.14 EXECUTION OF BID 30
2.15 MODIFICATION OR WITHDRAWALS OF BIDS 30
2.16 LATE BIDS 31
2.17 BID OPENING 31
2.18 DETERMINATION OF RESPONSIVENESS 31
2.19 RESPONSIBLE BIDDER CRITERIA 31
2.20 BASIS FOR AWARD 32
2.21 BID TABULATIONS 32
2.22 MINOR IRREGULARITIES/RIGHT TO REJECT 32

2.23 CONE OF SILENCE 33
3.0 CONTRACT CONDITIONS 33
3.01 GENERAL REQUIREMENTS 33
3.02 STATEMENT OF AUTHORITY 33
3.03 VENDOR CONTACT INFORMATION 33
3.04 ADDITIONS OR DELETIONS 33
3.05 CONTRACT EXTENSION 34
3.06 PRICE ADJUSTMENT 34
3.07 CONDITIONS 35
3.08 PRODUCTION CUTOFF 35
3.09 FACILITIES 36
3.10 FACTORY-INSTALLED OPTIONS 36
3.11 VENDOR-INSTALLED OPTIONS 36
3.12 NON-SCHEDULED OPTIONS 36
3.13 FORCE MAJEURE 36
3.14 PARTS 37
3.15 PURCHASE ORDERS 37
3.16 DELIVERY 38
3.17 INSPECTION AND ACCEPTANCE 39
3.18 INVOICING AND PAYMENTS 39
3.19 WARRANTY 39
3.20 QUARTERLY REPORTS 40
3.21 ADMINISTRATIVE FEE 41
3.22 LIQUIDATED DAMAGES 41
Appendix A: Zone Map 43
Appendix B: Bid Calendar 44
Appendix C: ACH Payments 45
Appendix D: Federal Clause 46

1.0 GENERAL CONDITIONS

1.01 BID CORRESPONDENCE

All correspondence regarding this bid should be directed to the Florida Sheriffs Association ("FSA"). Please be sure to reference the bid number and title and provide your contact information. Communication for this Invitation to Bid should be identified by Contract number and title and directed to:

Florida Sheriffs Association
Attn: Cooperative Purchasing Program Coordinator
2617 Mahan Drive
Tallahassee, FL 32308
E-mail: CPP@flsheriffs.org

1.02 PURPOSE

The Florida Sheriffs Association invites interested bidders, including Manufacturers and Dealers or authorized representatives (each a "Bidder" and together, "Bidders"), to submit responses in accordance with these solicitation documents for Bid FSA26-EQU24.0 Equipment. The FSA Cooperative Purchasing Program will conduct the solicitation process and administer the resulting Contract. The purpose of this bid is to establish Contracts with Manufacturers and Manufacturer's authorized Dealers for Contract terms specified under Section 1.03 for the purchase of items on a "no trade-in basis."

1.03 TERM OF CONTRACT

The term for Contract FSA26-EQU24.0 Equipment ("Contract" or "Agreement") shall remain in effect for two years from date of Contract execution by the FSA, and may be extended by mutual agreement, at the sole option and discretion of the FSA. The initial term of this Contract begins October 1, 2026, and ends September 30, 2028.

Contract extensions will only be executed when the FSA determines, based on then-existing conditions, that it is in the best interest of the FSA and the Purchasers to do so.

1.04 JURISDICTION

This Agreement and the provisions contained herein shall be governed by and interpreted and construed in accordance with the laws of the State of Florida. Each party consents that the venue for any litigation arising out of or related to this Agreement shall lie in the appropriate court in and for Leon County, Florida.

1.05 SHERIFF AS COUNTY CONSTITUTIONAL OFFICER

The Offices of the Sheriff in the State of Florida are constitutional offices of the State of Florida. Each has the authority either individually or collectively to execute Contracts for all goods and services for the proper conduct of that office. Section 30.53, Florida Statutes, exempts the sheriffs' offices from the provisions of the Florida Statutes that would otherwise require sealed and competitive bidding procedures "concerning the purchase and procurement of supplies and equipment, selection of personnel, and the hiring, firing, and setting of salaries of such personnel."
The Office of the Sheriff is not required by law to accept the lowest priced proposal and may reject any or all of the proposals without recourse. Bidders are solely responsible for their own bid preparation costs and nothing in this solicitation in any way obligates the participating sheriffs' offices for any payment for any activity or costs incurred by any Bidder in responding to this solicitation.

1.06 FUNDING

In the case of certain Purchasers, including state agencies, funds expended for the purposes of a contract must be appropriated by the Florida Legislature, the individual Purchaser or the Purchaser's appropriating authority for each fiscal year included within the Contract period. For such Purchasers, their performances, and obligations to pay for products or services under any resulting contract or Purchase Order, including this Contract, are contingent upon such an annual appropriation by the Legislature, individual Purchaser or by the appropriating authority. Therefore, any Contract or Purchase Order, including this Contract, with such a Purchaser shall automatically terminate without penalty or termination costs in the event of non-appropriation.

1.07 CURRENCY

All transaction amounts, bids, quotes, provisions, payments, or any part of this Contract relating to currency are to be made in United States Dollars.

1.08 GENERAL DEFINITION

The terms used in this Contract are defined as the following:

A. Bidder: A business or enterprise that submits a formal bid to the Florida Sheriffs Association Cooperative Purchasing Program in accordance with these Terms and Conditions. A bidder, which is not the Manufacturer, must be authorized by the Manufacturer to market and sell an item for which they are bidding.
B. Bid System: The online forum used for the submission of bids and review of bid results for the specifications connected to this Invitation to Bid. VendorLink is the software used for this bid.
C. Build Sheet: A document from the Bidder that confirms that the item submitted meets or exceeds the FSA Base Specifications. Build Sheets include, but are not limited to, the factory options list and door data plate information which may include details such as engine size and transmission, paint codes, production date, axle code, etc.

D. Dealer: An enterprise authorized by the Manufacturer to market, sell, provide, and service the items for the Florida Sheriffs Association Cooperative Purchasing Program. Dealers may be Vendor-owned and controlled, in whole or in part, or independently owned and controlled.
E. End User: A term used to distinguish the person who ultimately uses or is intended to use a product or for whom a product is designed for use.
F. Factory: Refers to the Manufacturer produced products.
G. Fleet Advisory Committee ("Committee"): An employee of a sheriff's office or other local governmental agency, or person who the FSA CPP identifies as a subject matter expert who assists with the development of bid specifications and evaluation of bid responses. The Committee makes recommendations to the FSA CPP but is not responsible for final awards.
H. Florida Sheriffs Association ("FSA"): A Florida not-for-profit corporation that is tax-exempt under Section 501(c)(3) of the Internal Revenue Code, with its principal office in Tallahassee, Florida.
I. Florida Sheriffs Association Cooperative Purchasing Program ("FSA CPP"): The entity that administers the Invitation to Bid and contract administration functions for the resulting Contract(s).
J. FSA Base Specifications: Written descriptions of the minimum requirements for each item or item group developed by the FSA CPP for Bidders to bid on. These item requirements may be unique to the FSA CPP and require additional components to the Manufacturer's standard item.
K. Invitation to Bid: A competitive solicitation and award process established through the issuance of an invitation to Bidders, Vendors, Dealers and Manufacturers to submit a price offer on a specific product to be provided. This term shall include the FSA Base Specifications available to Bidders on the Bid System and references to solicitation documents. The term shall not include requests for proposals, requests for quotes, requests for letters of interest, or purchase orders based on oral or written quotations.
L. Manufacturer: The original producer or provider of items offered on this Contract.
M. Manufacturer's Suggested Retail Price ("MSRP"): The Manufacturer's recommended retail selling price, list price, published list price, or other usual and customary price that would be paid by the Purchaser. The following are acceptable sources of current MSRPs and MSRP Lists for use in submission of the bid solicitation and the resulting Contract:
    a. Manufacturer's Computer Printouts
    b. Manufacturer's Annual U.S. Price Book
    c. Manufacturer's official website
N. Non-Scheduled Option: Any optional new or unused component, feature or configuration that is not included or listed in the FSA Base Specifications or options provided by the Vendor.
O. Production Cutoff: A date used by Manufacturers to notify Vendors and Dealers that the Manufacturer has reached maximum capacity for orders or is discontinuing the production of an item. Manufacturers use this term when referring to any given model year for production.
P. Published List Price: A standard "quantity of one" price currently available to government and educational Purchasers, excluding cooperative or volume discounts.
Q. Purchase Order: An official request for order from a Purchaser to an awarded Vendor for an item that has been awarded on this Contract. Purchase Orders placed using this Contract formalize the Terms and Conditions of this Contract under which a Vendor furnishes items to a Purchaser.
R. Purchaser: An entity that seeks to obtain items awarded on this Contract by meeting the eligible user criteria.
S. Qualifications Packet: This packet contains the required forms, attestations, authorizations, and organizational information needed by Bidders to qualify.
T. Terms and Conditions: This document, which serves as the governing Invitation to Bid and

Contract for the identified FSA CPP Invitation to Bid and resulting contract(s). Standard regulations, processes, procedures, and compliance requirements are identified herein. Bidders complete a Qualifications Packet during the bid process indicating they agree to comply with the Terms and Conditions, and that this will serve as the Contract for both parties, should the Bidder(s) receive award. Bidder must respond to the Contract Signature Form affirming acceptance of the Terms and Conditions, which will serve as the Contract for both parties, should the Bidder receive an award.

U. Third Party Supplier: Businesses external to a Bidder or Vendor that provide products and services which contribute to the overall finished item in this Contract. Third Party Suppliers are contractors and/or Subcontractors under the direction and responsibility of the Bidder or Vendor.
V. Vendor: The Bidder(s) that receive award, who agree to provide the Contract items that meet the requirements and FSA Base Specifications of the Contract. The Vendor must agree to the Terms and Conditions, which will serve as the governing Contract. If the Vendor is not the Manufacturer, the Vendor must be authorized by the Manufacturer to market, sell, provide, and service all awarded items.
W. Vendor Installed: A product or service provided by the Vendor or other third party; not the factory.

1.09 ELIGIBLE PURCHASERS OF CONTRACT

Awarded bid Contract pricing, will be extended and guaranteed to the Florida Sheriffs Association, any unit of local government, political subdivision, or agency of the State of Florida("State"). This includes, but is not limited to counties, municipalities, sheriffs' offices, clerks, property appraisers, tax collectors, supervisors of elections, school boards or districts, water management districts, other special districts, police and fire departments, emergency response units, state universities and colleges, or other state, local or regional government entities within the State of Florida. Eligible Purchaser also includes all Eligible Users as defined in Rule 60A-1.001(4) Florida Administrative Code ("F.A.C.").

All Purchasers are bound by applicable Federal and State law, local ordinances, rules, and regulations for purchases made under this Contract. Participating agencies cannot guarantee any order other than those ordered by the individual agency.

In addition, awarded bids can be extended and guaranteed to other entities, which can include out-of-state sales, in accordance with Vendors' individual Manufacturers' agreements. Vendors that wish to extend the Contract pricing to entities other than those defined here are governed by their Manufacturers' agreements and must agree to the Terms and Conditions.

1.10 LEGAL REQUIREMENTS

Federal, State, and local laws, ordinances, rules, and regulations, including any applicable motor vehicle dealer laws, that in any manner affect the items covered herein apply to this Contract and all services, work, materials, and supplies provided by Vendor in order to fulfill its obligations under this Contract. Lack of knowledge by the Bidder of applicable legal requirements will in no way be a cause for relief from responsibility.

Bidders have the option to certify that they are willing to accept Purchase Orders funded in whole or in part with Federal funds. By opting in, Bidders certify that they are willing to comply with the requirements outlined in Appendix D upon receipt of a federally funded Purchase Order. This is not a requirement of the Invitation to Bid or Contract. Bidders are not required to opt-in; however, they are required to indicate whether they will opt-in or opt-out of receiving Federally funded Purchase Orders. The FSA CPP has taken actions to provide and develop information, materials, and resources for Bidders, Vendors and Purchasers that will assist in the use of Federal funding with this Contract for Purchasers that use Federal funds for purchase or intend to request reimbursements using Federal funds.

1.11 PATENTS & ROYALTIES

The Vendor, without exception, shall indemnify and hold harmless the Florida Sheriffs Association ("FSA") and its employees from liability of any nature or kind, including costs and expenses for, or on account of, any copyrighted, patented, or unpatented invention, process, or article manufactured or used in the performance of the Contract, including its use by the FSA or a Purchaser or an End User.

If the Bidder uses any design, device or materials covered by letters, patent, or copyright, it is mutually understood and agreed, without exception, that the bid prices shall include all royalties or costs in any way arising, directly or indirectly, from the use of such design, device, or materials in any way involved in the work.

1.12 FEDERAL AND STATE STANDARDS

It is the intent of the FSA CPP that all specifications herein are in full and complete compliance with all Federal and State of Florida laws, requirements, and regulations applicable to the type and class of commodities and contractual services being provided.

In addition, any applicable Federal or State legal or regulatory requirements that become effective during the term of the Terms and Conditions, regarding the items and services specifications, safety, and environmental requirements shall immediately become a part of the Terms and Conditions. The Vendor shall meet or exceed any such requirements of the laws and regulations. If an apparent conflict exists, the Vendor shall contact the FSA CPP immediately.

1.13 UNDERWRITERS' LABORATORIES

Unless otherwise stipulated in the bid, all manufactured items and fabricated assemblies shall be Underwriters' Laboratories, or U.L., listed or re-examination listing where such has been established by U.L. for the item(s) offered and furnished.

1.14 AMERICANS WITH DISABILITIES ACT

To request this material in accessible format, sign language interpreters, information on access for persons with disabilities, or any accommodation to review any document or participate in any FSA sponsored proceeding, please contact FSA Human Resources at (850) 877-2165 five (5) business days in advance to initiate your request. TTY users may also call the Florida Relay Service at 711.

1.15 REASONABLE ACCOMMODATION

In accordance with the Title II of the Americans with Disabilities Act, any person requiring an accommodation because of a disability at the bid opening must contact the FSA Human Resources at (850) 877-2165.

1.16 DISADVANTAGED BUSINESSES

As part of the solicitation process the FSA CPP makes information publicly available to potentially qualified entities, and conducts additional outreach to qualified:

- Small businesses,
- Minority-owned small businesses,
- Women-owned small business enterprises, and
- Disadvantaged business enterprises.

The FSA CPP takes necessary affirmative steps to ensure that small businesses, minority businesses, women's business enterprises, veteran-owned businesses and labor surplus area firms are used, when possible, as recommended by 2 C.F.R. § 200.321. The FSA CPP will:

- Evaluate whether above-listed types of businesses are potential sources,
- Place those qualified businesses enterprises on solicitation lists, and
- Search the Small Business Administration, Minority Business Development Agency, and Labor Surplus Area reports for additional potential sources.

Bidders self-certify in the qualification packet whether they meet the state and federal definitions of a small business, minority-owned small business, women-owned small business enterprise, and disadvantaged business enterprise.

1.17 ANTI-DISCRIMINATION, E-VERIFY, AND ANTI-HUMAN TRAFFICKING REQUIREMENTS

The Bidder certifies that they are in compliance as applicable by Federal or State law.
The Vendor shall comply with and perform all applicable provisions of Section 448.095, Florida Statutes. The Vendor shall register with and use the United States Department of Homeland Security's E-Verify system to verify the work authorization status of all newly hired employees. The FSA, the FSA CPP, or Purchaser, may terminate this Contract immediately for cause if there is a good faith belief that the Vendor has knowingly violated Section 448.09(1), Florida Statutes.

If the Vendor anticipates entering into agreements with a Subcontractor for the services and/or work contemplated under this Agreement, the Vendor will not enter into the Subcontractor agreement without first receiving an affidavit from the Subcontractor regarding compliance with Section 448.095, Florida Statutes, and stating that the Subcontractor does not employ, contract with, or subcontract with an unauthorized alien. The Vendor shall maintain a copy of such affidavit for the duration of the agreement and provide a copy to the FSA, the FSA CPP, or Purchaser, upon request.

In the event that the FSA, the FSA CPP, or Purchaser, has a good faith belief that a Subcontractor has knowingly violated Section 448.095, Florida Statutes, but the Vendor has otherwise complied with its obligations hereunder, the FSA, the FSA CPP, or Purchaser, shall promptly notify the Vendor. The Vendor agrees to immediately terminate the agreement with the Subcontractor upon notice from the FSA, the FSA CPP or Purchaser. Further, absent such notification from the FSA, the FSA CPP or Purchaser, the Vendor or any Subcontractor who has a good faith belief that a person or entity with which it is contracting has knowingly violated Section 448.09(1), Florida Statutes, shall promptly terminate its agreement with such person or entity.

By entering into this Contract, the Vendor represents that no public employer has terminated a contract with the Vendor under Section 448.095(5)(c), Florida Statutes, within the year immediately preceding the date of this Contract.

The Vendor certifies, by acceptance of this Contract, that neither it nor its principals utilize coercion for labor or services as defined in Section 787.06, Florida Statutes. The Vendor agrees to execute an affidavit in a form satisfactory to the FSA, the FSA CPP or the Purchaser in compliance with Section 787.06(14), Florida Statutes.

1.18 BEST COMMERCIAL PRACTICES

The apparent silence or omission of any description from the specifications shall be regarded as meaning that only the best commercial practices, size, and design are to be used. All workmanship is to be first quality. All interpretations of the FSA Base Specifications shall be upon the basis of this statement.

1.19 PUBLIC ENTITY CRIMES (“PEC”) AND SCRUTINIZED COMPANIES STATEMENTS

In accordance with the Public Entity Crimes Act, Section 287.133, Florida Statutes, a person or affiliate who has been placed on the convicted vendor list, maintained by the State of Florida Department of Management Services following a conviction for public entity crimes, may not submit a bid on a contract to provide any goods or services to a public entity, may not submit a bid on a contract with a public entity for the construction or repair of a public building or public work, may not submit bids on leases of real property to a public entity, may not be awarded or perform work as a vendor, supplier, sub-vendor, or consultant under a contract with a public entity, and may not transact business with any public entity in excess of the threshold amount provided in Section 287.017, Florida Statutes, for CATEGORY TWO for a period of 36 months from the date of being placed on the convicted vendor list.

In accordance with Section 287.135, Florida Statutes, Bidder certifies that neither it nor any of its officers, directors, executives, partners, shareholders, members, or agents is on the Scrutinized Companies with Activities in Sudan List, the Scrutinized Companies with Activities in the Iran Terrorism Sectors List, or the Scrutinized Companies that Boycott Israel List created pursuant to Sections 215.4725 and 215.473, Florida Statutes, and in the event such status changes, Bidder and/or Vendor, if status changes after award, shall immediately notify FSA, the FSA CPP and/or the Purchaser. If Bidder and/or Vendor, if applicable after award, is found to have submitted a false statement, has been placed on the Scrutinized Companies with Activities in Sudan List, the Scrutinized Companies with Activities in the Iran Terrorism Sectors List, or has been engaged in business operations in Cuba or Syria, or is now or in the future on the Scrutinized Companies that Boycott Israel List, or engaged in a boycott of Israel, the FSA and/or the FSA CPP may immediately terminate this Contract.

1.20 TAX EXEMPTION

Purchasers making a purchase pursuant to the awarded bid are generally exempt from Federal Excise and State Sales Tax. It is the responsibility of the Vendor to verify that the Purchaser is exempt by obtaining the Purchaser's Federal Excise and State Taxes and Use Certificate Number.

The Florida Sheriffs Association is a 501(c)3 organization and is exempt from all Federal Excise and State Taxes. The FSA State Sales Tax and Use Certificate Number is 85-8012646919C-3.

1.21 ORDER OF PRECEDENCE IN THE EVENT OF CONFLICT

In the event of conflict, the conflict may be resolved in the following order of priority (highest to lowest):

- Addenda to Contract Terms and Conditions, if issued
- Contract Conditions
- General Conditions
- Addenda to Bid Specifications, if issued
- The FSA Base Specifications
- Bidder Instructions

1.22 COMMUNICATIONS

Communications between a Bidder, lobbyist or consultant and the FSA are limited to matters of process or procedure and shall be made in writing to the FSA CPP Staff.

Bidders should not rely on representations, statements, or explanations other than those made in this Invitation to Bid or in any written addendum to this Invitation to Bid, and no oral representations, statements, or explanations shall be deemed to bind the FSA or Eligible Users.

1.23 CLARIFICATION AND ADDENDA

Any questions or clarifications concerning the Invitation to Bid shall be submitted to the FSA CPP by e-mail to CPP@flsheriffs.org with the bid title and number referenced on all correspondence. Final questions must be received by the date for Request for Clarification stated on the Bid Calendar. Questions and answers will be posted to the FSA CPP Bid System on the date indicated in the Bid Calendar. Questions received during the cone of silence dates listed on the Bid Calendar will not be addressed, except as provided herein.

Interpretation of the specifications or any solicitation documents will not be made to the Bidder verbally, and if any verbal clarifications are provided, they are without legal effect. The FSA CPP will make every attempt to e-mail updates to registered Bidders. However, posting to the FSA CPP website or the Bid System constitutes proper notice of addenda.

The FSA CPP shall issue a formal addendum if substantial changes that impact the submission of bids are required. Any such addenda shall be binding on the Bidder and shall become a part of the solicitation document. In the event of conflict with the original specifications, addenda shall govern to the extent specified. Subsequent formal addenda, if any, shall govern over prior formal addenda only to the extent specified. The FSA will not be responsible for any explanation or interpretation made verbally or in writing except those made through the posting of a formal addendum.

The bid submission constitutes acknowledgment of addenda to the FSA Base Specifications. Bids that fail to account for the specification addenda shall be determined to be nonresponsive; however, the FSA CPP may waive this requirement when in its best interest.

After the start of the Contract term, the FSA CPP will notify all Vendors of any addenda and will require acknowledgement of the new terms and conditions. If the Vendor does not agree to the new terms and conditions, the Vendor's award can be removed or replaced by another Vendor or qualified responsive Bidder.

1.24 SIGNED BID CONSIDERED AN OFFER

The signed bid shall be considered an offer on the part of the Bidder, which offer shall be deemed accepted upon approval by the FSA CPP. The bid submission must be signed by an authorized representative. Submission of a bid in the FSA CPP Bid System constitutes a signed bid for purposes of bid evaluation. An electronic signature may be used and shall have the same force and effect as a written signature.

1.25 ASSIGNMENT OF CONTRACT

No right or interest in this Contract may be assigned, transferred, conveyed, sublet, or otherwise disposed of, without prior written consent of the FSA CPP.

If the original Vendor sells or transfers all assets or the entire portion of the assets used to perform this

Contract, a successor-in-interest must perform all obligations under this Contract. The FSA CPP reserves the right to reject the acquiring entity as Vendor. A change of name agreement will not change the contractual obligations of the Vendor.

In the event a Manufacturer reassigns the product line to an alternate company, the Vendor is required to notify the FSA CPP in writing of the change within ten (10) business days of the reassignment. If the Vendor is not already an approved FSA CPP Vendor, the alternate company is required to submit a Qualifications Packet to the FSA CPP to become an approved Vendor prior to conducting any qualified sales. The FSA CPP may approve such assignments of existing or new vendors at its discretion. The Vendor is required to honor the Contract pricing and all of the applicable Terms and Conditions throughout the remaining term of the Contract.

1.26 TERMINATION OF PRODUCT LINE

If a Vendor terminates a product line (Manufacturer or model), the Vendor is required to notify the FSA CPP within ten (10) business days of the decision not to retain the product line. The FSA CPP may remove the terminated products from the Contract. In the event of the termination of a product line (Manufacturer or brand), the Purchaser shall compensate the Vendor in accordance with the Contract for all goods delivered by the Vendor prior to termination, net of any costs incurred by the Purchaser and the FSA as a consequence of the termination.

1.27 DEMONSTRATION OF COMPETENCY

Bidders must be able to demonstrate a good record of performance for a reasonable period of time, and have sufficient financial support, equipment and organization to ensure they can satisfactorily execute the services if awarded a Contract under the Terms and Conditions herein stated.

The terms "equipment" and "organization" as used herein shall be construed to mean a fully equipped and well-established company in line with the best business practices in the industry and as determined by the FSA CPP.

The FSA CPP may consider any evidence available and may require submission of supporting documentation regarding the financial, technical, and other qualifications and abilities of a Bidder, including past performance with the FSA CPP, in making the award.

The FSA CPP may inspect the Bidder's facility prior to the award of Contract. Bids will only be considered from firms which are regularly engaged in the business of providing the goods or services described in this Invitation to Bid.

1.28 VENDOR ABILITY TO PERFORM

The FSA CPP may require Bidders to show proof that they have been designated as authorized representatives of a Manufacturer or supplier, which is the actual source of supply. In these instances, the FSA CPP may also require information from the source of supply regarding the quality, packaging,

and characteristics of the products. Any conflicts between this material information provided by the source of supply and the information contained in the bid submission may render the bid nonresponsive.

During the Contract term, the FSA CPP may review the Vendor's record of performance and may require submission of supporting documentation to ensure that the Vendor is providing sufficient financial support, equipment and organization.

If the FSA CPP determines that the Vendor no longer possesses the financial support, equipment and organization in order to comply with this section, the FSA has the authority to immediately terminate the Contract.

By responding to this Invitation to Bid, the Bidder warrants that, to the best of his or her knowledge, there is no pending or threatened action, proceeding, or investigation, or any other legal or financial condition, that would in any way prohibit, restrain, or diminish the Bidder's ability to satisfy the obligations of a resulting contract. The Bidder warrants that neither it nor any affiliate is currently on the convicted vendor list maintained pursuant to Section 287.133, of the Florida Statutes, or on any similar list maintained by any other state or the Federal government.

The Bidder, by responding to this Invitation to Bid, acknowledges and warrants that, if selected, Bidder (being then considered a "Vendor") shall immediately notify the FSA, the FSA CPP and Purchaser in writing if its ability to perform is compromised in any manner during the term of the Contract.

1.29 FINANCIAL RESPONSIBILITY

Bidder affirms by the submission of the bid and by signature on the Contract Signature Form that the Bidder:

- Has fully read and understands the scope, nature, and quality of work to be performed or the services to be rendered under this Invitation to Bid and has adequate facilities and personnel to fulfill such requirements.
- Accepts the financial responsibility associated with this bid and declares that they have access to capital (in the form of liquidity or credit lines) in order to meet the financial demands of such award.
- Has assessed the financial responsibility required to serve the Contract as bid, including such details as the obligations to perform all items bid, zones bid, and quantities that could be ordered, as well as timing of payment from Purchasers, which can be forty-five (45) calendar days from receipt of invoice.

1.30 QUALITY AND SAFETY

All materials used for the manufacture or construction of any supplies, materials or equipment covered by this bid shall be new. The items bid must be new, the latest model, of the best quality, and highest-grade workmanship that meet or exceed Federal safety standards.

Items requiring certification should require certification of options in cases where non-certified options could result in the decertification of the original product or warranty. In all cases where options are not certified, the Bidder (or, if after award, the Vendor) must disclose to the End User that the non-certified options are not required to be certified. All options must meet or exceed Federal safety standards.

1.31 NONCONFORMANCE

Items may be tested for conformance with specifications. Items delivered that do not conform to specifications may be rejected and returned at the Vendor's expense.

Any violation of these stipulations may also result in:

- Vendor's name being removed from the Awarded Vendor List.
- The FSA and Purchasers being advised not to do business with Vendor.

1.32 GRATUITIES

Bidders shall not offer any gratuities, favors, or anything of monetary value to any official, employee, or agent of the FSA, for the purpose of influencing consideration of this bid. Bidders shall disclose in writing any conflicts of interest to the FSA prior to any award, or as soon as practicable after learning of any such conflict, including any contractual or employment relationships with the FSA or potential Purchasers of Bidders' products or services.

1.33 NEUTRALITY

The Cooperative Purchasing Program maintains a neutral role in the administration of its contracts and does not endorse, recommend, or promote individual vendors. All awarded vendors are responsible for their own marketing and outreach to participating agencies.

1.34 TIE BIDS

The FSA CPP has the right to award multiple Bidders the primary or alternate award in the event of a tie. In the event the FSA CPP desires to break tie bids, and businesses have qualifying drug-free work programs, the award will be made using the following criteria:

- Bidder within the State of Florida; and of none, then
- Vendors' performance record with Purchasers; and of none, then
- Coin Toss.

1.35 RIGHT TO AUDIT

Vendor shall establish and maintain a reasonable accounting system that enables the FSA CPP to readily identify Vendor's sales. The FSA CPP and its authorized representatives shall have the right to audit and to make copies of all related records pertaining to this Contract, including all government sales and Eligible User information, whether kept by or under the control of the Vendor, including, but not limited to those kept by its employees, agents, assignees, successors, sub-vendors, or Third Party Suppliers in whatever form they may be kept – written or electronic. Such records shall include, but not be limited to:

- Accounting records, including but not limited to Purchase Orders, confirmation of orders or invoices, paid vouchers, cancelled checks, deposit slips, ledgers, and bank statements;
- Written policies and procedures;
- Subcontract files (including proposals of successful and unsuccessful Bidders, bid recaps, etc.);
- Original estimates, quotes, or work sheets;
- Contract amendments and change order files;
- Insurance documents; or
- Memoranda or correspondence.

Vendor shall maintain such records during the term of this Contract and for a period of three (3) years after the completion of this Contract. At the Vendor's expense and upon written notice from the FSA and/or the FSA CPP, the Vendor shall provide such records for inspection and audit by the FSA and/or the FSA CPP or its authorized representatives. Such records shall be made available to the FSA and/or the FSA CPP during normal business hours within three (3) business days of receipt of the written notice. The FSA and/or the FSA CPP may select the Vendor's place of business or offsite location for the audit. The FSA and/or the FSA CPP may also request the Vendor provide requested records via e-mail.

Vendor shall ensure the FSA and the FSA CPP have these rights with Vendor's employees, agents, assigns, successors, and Third Party Suppliers, and the obligations of these rights shall be explicitly included in any subcontracts or agreements formed between the Vendor and any sub-vendors to the extent that those subcontracts or agreements relate to fulfillment of the Vendor's obligations to the FSA, the FSA CPP, or Purchaser(s).

Professional fees, personnel costs, and travel costs incurred by the FSA and/or the FSA CPP, under its authority to audit and not addressed elsewhere will be the responsibility of the FSA and/or the FSA CPP, as applicable. However, if the audit identifies underreporting, overpricing or overcharges (of any nature) by the Vendor to the FSA, the FSA CPP, or a Purchaser in excess of three percent (3%) of the total Contract billings, the Vendor shall reimburse the FSA and/or the FSA CPP for the total costs of the audit not to exceed $5,000. If the audit discovers substantive findings related to fraud, misrepresentation, or non-performance, the FSA may recoup all the costs of the audit work from the Vendor.

Any adjustments or payments that must be made as a result of any such audit or inspection of the Vendor's invoices or records shall be made within a reasonable amount of time, not to exceed sixty (60) calendar days, from presentation of the FSA's and/or the FSA CPP's findings to Vendor.
The FSA, the FSA CPP, and the Purchaser(s), as applicable have the right to assess damages or seek

reimbursements or refunds based on audit results.

1.36 LICENSES AND PERMITS

The Bidder shall obtain and pay for all licenses, permits and inspection fees for this bid submission and any resulting Contract. Where Vendors are required to enter or go onto the FSA or Purchaser property to deliver materials or perform
work or services as a result of a bid award, the Vendor will assume the full duty, obligation and expense of obtaining all necessary licenses, permits and insurance.

The Bidder must, by the time of award, be actively registered to do business in the State of Florida on Su nBiz.gov.

1.37 PERFORMANCE BONDS

Purchasers may request a performance bond from a Vendor. Performance bonds are recommended with pre-payment and will be at the expense of the requesting agency. Purchasers should determine the best practice in comparing performance bond expense against any prior discounts that may be available.

1.38 ELIMINATION FROM CONSIDERATION

This Invitation to Bid shall not be awarded to any person or Bidder who has outstanding debts to the FSA, whether in relation to current or previous bid awards or for other business purposes.

1.39 INDEPENDENT PREPARATION

A Bidder shall not, directly, or indirectly, collude, consult, communicate, or agree with any other Bidder as to any matter related to the bid each is submitting. Additionally, a Bidder shall not induce any other Bidder to modify, withdraw, submit, or not submit a bid.

Bidders or Vendors who are found to have engaged in these acts will be considered nonresponsive and will be suspended or barred from bid participation. Contract awards resulting from these acts may be terminated for default. Further, any such acts detected by the FSA may be reported to relevant law enforcement and/or prosecutorial agencies.

Bidders may submit multiple bids without violating this provision if the bid submitted is not from the same Manufacturer and product line. Dealers that share the same ownership may submit multiple bids without violating this provision if the Bidders are not in the same region featuring the same Manufacturer and product line.

1.40 DEFAULT

In case of default on the part of Vendor, the FSA and/or the FSA CPP may take necessary steps to otherwise procure the products sought, including but not limited to procuring the products or services from the next highest ranked Bidder or from other sources. A defaulting Vendor may be held liable for costs incurred by the FSA and/or the FSA CPP in procuring replacement products.

1.41 PROTESTS AND ARBITRATION

Any person who is adversely affected by the decision or intended decision to award shall file a "Notice of Protest" in writing to the FSA CPP within three (3) business days after the posting of the Intent to Award and shall file a formal written protest within five (5) business days after filing the Notice of Protest. Failure to file both a notice of protest and a formal written protest within the above referenced timelines shall constitute a waiver of proceedings.

The burden is on the party protesting the award of the bid to establish grounds for invalidating the award(s). The formal written protest must state with particularity the facts and law upon which the protest is based. Options are for informational purposes only and will not serve as a basis for protest. Failure to do so will result in a denial of protest. Formal written protest which states with particularity the facts and law upon which the protest is based will be reviewed by the FSA legal counsel for legal soundness and validity, and corrective action will be taken as needed contingent upon the validity of such claims. However, any additional time required and cost incurred by the FSA to substantiate a protesting party's claim(s) beyond the normal scope of its legal review due to the vague or inconclusive nature of the protesting party's filing will be reimbursable to the FSA and deducted from the protesting party's bond or security which must accompany their filing.

Any Bidder who files an action protesting a decision or intended decision pertaining to this Contract shall post a bond, cashier's check or money order payable to the Florida Sheriffs Association in the amount equal to ten percent (10%) of the item being protested. The bond, cashier's check or money order must be filed at the time of filing the formal written protest or within the five (5) business day period allowed for filing the formal written protest. The FSA CPP will provide the amount required within two (2) business days of the notice of protest received. This bond or security will be conditioned upon the payment of all costs which may be adjudged against the protesting party in a court of law and/or to reimburse the FSA for additional legal expenses incurred and required to substantiate the protesting party's claim(s). Failure to post the bond or security requirement within the time allowed for filing will result in a denial of protest. The filing of the protest shall not stay the implementation of the bid award by the Florida Sheriffs Association.

Should the unsuccessful Bidder(s) decide to appeal the decision of the FSA, they shall file a notice to the FSA CPP within three (3) business days of the FSA bid protest decision regarding their intent to request arbitration. A demand for arbitration with the American Arbitration Association's ("AAA") commercial panel under its rules and regulations must be made within ten (10) business days of the FSA bid protest decision. Any person who files for an arbitration with the AAA shall post with the Florida Sheriffs Association at the time of filing the formal written arbitration request, a bond, cashier's check, or money order payable to the Florida Sheriffs Association in the amount equal to ten percent (10%) of the product line being protested. This amount will be the same amount as the FSA CPP provided at the time

of filing the initial protest. Failure to provide written notice to the FSA CPP, file a demand for arbitration with the AAA, or failure to post the required bond and security requirement within the specified timelines shall constitute a waiver of arbitration proceedings. By responding to this procurement, the Bidder expressly agrees to the use of mandatory binding arbitration to resolve any appeals of the decision of the FSA, and any claims arising from or in any way relating to the procurement process, and expressly waives any and all rights that it may otherwise have to pursue such claims in any other forum, judicial or otherwise.

If the party filing for arbitration does not prevail, it shall pay all costs, legal expenses and attorney fees of the prevailing party incurred in connection with the arbitration. However, if the filing party prevails, the parties shall share equally the fees and expenses of the arbitration and AAA, and each shall bear the cost of their own attorneys' fees. The filing for arbitration shall not stay the implementation of the bid award by the Florida Sheriffs Association.

1.42 NONPERFORMANCE

By virtue of the bid submission, Bidder acknowledges its obligation to sell items in all zones for which it is awarded. Upon award, failure of the Vendor to comply with these requirements may result in the imposition of liquidated damages of up to $1,000 per item, which amount the Vendor agrees is reasonable, or probation, suspension, termination or a combination thereof from current and future bids at the FSA CPP's discretion.

The Vendor shall at all times during the Contract term remain responsive and responsible. In determining Vendor's responsibility, the FSA CPP shall consider all information or evidence that demonstrates the Vendor's ability or willingness to fully satisfy the requirements of the Terms and Conditions.

Vendors that are not in compliance with any of the provisions of this Contract can be assessed liquidated damages, suspended or terminated from the Contract. The FSA CPP at its sole discretion may remove a noncompliant Vendor from future competitive bid solicitations; or take other actions including suspension from the Contract until compliance issues are resolved, limit current or future Vendor participation by items or zones, or other actions as determined by the FSA CPP at its sole discretion.

At the FSA CPP's discretion, Vendors may be required to develop corrective action plans to address contract compliance. Failure to abide by corrective action plans will result in termination from the existing Contract and future competitive bid solicitations at the discretion of the FSA CPP.

In situations where there is evidence that the Vendor has engaged in egregious breaches of the Contract with respect to either the FSA CPP and/or the Purchaser, the Contract can be terminated immediately and the Vendor will be removed from future solicitations for a period of up to three (3) years, or a permanent ban from the bid process at the sole discretion of the FSA CPP.

Specific conditions for termination include, but are not limited to; failure to perform, refusal to accept orders during the Contract term while Manufacturer orders are still being accepted for current model year or the new year if the item is price protected by the factory, charging amounts exceeding MSRP on factory or Vendor installed items and packages, requiring the purchase of additional options over and

above the base item as a condition of acceptance of order, providing aftermarket options where factory options are available without the consent of the Purchaser, any misrepresentation of optional equipment or service as being factory that fails to meet the definition as described in this document, and any other practice deemed to be inconsistent with the intent of the Contract.

Any Vendor presented with a valid Purchase Order consistent with Vendor bid quotes or other agreed upon terms and pricing is required by this Contract to accept such Purchase Order and deliver the product. Purchase Orders must be fulfilled whether or not the Purchase Order includes options. The Vendor must deliver this product in accordance with the Terms and Conditions – regardless of whether doing so will provide the Vendor with a profit or loss.

Failure to deliver the item may result in the Purchaser seeking damages for the difference of cost to issue a new Purchase Order with another Vendor, plus any legal fees and damages that may be incurred in the process to facilitate a completed order. Additionally, the FSA and/or the FSA CPP may seek damages for nonpayment of administrative fees, to which the FSA and/or the FSA CPP is entitled, according to Section 3.21, and any attorneys' fees incurred in the recovery of these damages.

1.43 SEVERABILITY

In the event any provision of this Contract is held to be unenforceable for any reason, the unenforceability thereof shall not affect the remainder of the Contract, which shall remain in full force and effect and enforceable in accordance with its terms.

1.44 TERMINATION FOR CAUSE

If, through any cause within the reasonable control of the Vendor, it shall fail to fulfill in a timely manner or otherwise violate any of the terms of this Contract, the FSA shall have the right to terminate the services remaining to be performed. Written notice of the deficiencies shall be given to the Vendor and unless the deficiencies are corrected within ten (10) business days, the Contract may be terminated for cause immediately. The right to exercise the option to terminate for cause shall be in the sole discretion of the FSA, and the failure to exercise such right shall not be deemed to constitute a waiver of this right.

In the event of a termination for cause, the Purchaser shall compensate the successful Vendor in accordance with the Contract for all services performed by the successful Bidder prior to termination, net of any costs incurred by the Purchaser and the FSA as a consequence of the default.

Notwithstanding the above, the Vendor shall not be relieved of liability to the FSA for damages sustained by the FSA by virtue of any breach of the Contract by the Vendor, and the FSA may reasonably withhold payments to the Vendor for the purposes of offset until such time as the exact amount of damages due the FSA from the Vendor is determined.

1.45 TERMINATION WITHOUT CAUSE

The FSA and/or the FSA CPP can terminate this Contract in whole or part without cause by giving written notice to the Vendor of such termination, which shall become effective thirty (30) calendar days following receipt by Vendor of such notice.

In the event of a termination without cause, all finished or unfinished documents and other materials shall be properly delivered to the FSA.

The Vendor shall not furnish any product after it receives the notice of termination, except as necessary to complete the continued portion of the Contract, if any. The Vendor shall not be entitled to recover any lost profits that the Vendor expected to earn on the balance of the Contract or cancellation charges.

Any payments to the Vendor shall be only to the total extent of the Purchaser's liability for goods or services delivered prior to the date of notice to terminate the Contract.

1.46 CONTRACT ADVERTISEMENT AND USE OF THE FSA CPP LOGO

The FSA CPP logo is an official logo of the Florida Sheriffs Association designed to promote the program. The FSA CPP logo may be used by Vendors in accordance with the policy contained in this Section 1.46. Use of the FSA CPP logo is limited to the original version received from the FSA. Modifications are not permitted.

Methods of use include, but are not limited to:

- Electronic mediums such as websites, digital marketing campaigns, social media and e-mail; or
- Print media such as forms, marketing campaigns, business cards, posters, banners, brochures, flyers and postcards.

Vendors may request use of the FSA CPP logo by contacting cpp@flsheriffs.org and should include a brief description of how the Vendor intends to use it. The official FSA sheriff's star and wreath logo may not be used without prior written permission.

2.0 BIDDER INSTRUCTIONS

2.01 QUALIFICATION

Bidders are required to complete the qualification packet as part of the bid submission. A Bidder becomes a qualified Bidder if they comply with this section and Section 2.09, Mandatory Pre-Bid Meeting.

Qualification Packet information required for bid submission includes:

- Qualifications Form
    - Contact Information
    - Business Profile
    - References
    - Disqualifications & Defaults
    - Bidder's Authorized Dealer Listing
- Florida Statute Compliance Attestations
    - SunBiz
    - E-Verify
    - Anti-Human Trafficking
    - Workers' Compensation
    - Drug-Free Workplace
    - Compliance with Applicable Federal, State, and Local Laws and Ordinances
- Federal Compliance
    - Federal Compliance Certifications
    - Debarment and Suspension
    - Lobbying Certification for Contracts, Grants, Loans and Cooperative Agreements

The Qualification Packet is located on the Bid System.

2.02 LICENSING AND FACILITIES

Bidders are required to obtain all required licenses, including any applicable motor vehicle dealer licenses, and registrations, and comply with all applicable Federal, State, and local laws and ordinances, including any applicable motor vehicle dealer laws, in order to bid on any motor vehicle.

Bidders must maintain a repair facility within the State of Florida to provide warranty service for the items bid. If Bidders do not have a facility, the Bidder must be able to assist Purchasers in obtaining warranty work as authorized by the Manufacturer.

2.03 INSURANCE AND INDEMNIFICATION

Vendor shall maintain, at its sole cost and expense, the insurance coverages required by the FSA and Purchasers through the duration of this Contract, with limits of liability not less than the following:

- Workers' Compensation Insurance in accordance with the laws of the State of Florida.
- Comprehensive General Liability Insurance covering the Vendor's legal liability for bodily injury and property damage, contractual liability and completed products and operation, with limits of not less than $1,000,000 per occurrence and $2,000,000 aggregate, and covering at least the following hazards:
    - Independent Contractors Coverage for bodily injury and property damage in connection with any subcontractors' operation.
- Automobile Liability Insurance covering the Vendor's legal liability for bodily injury and property damage in limits of not less than $1,000,000 per occurrence, providing coverage for any accident arising out of or resulting from the operation, maintenance, or use by the Vendor of any owned, non-owned, or hired automobiles, trailers, or other equipment required to be licensed.

It is understood and agreed that all insurance policies provided by the Vendor are primary coverage and non-contributory with respect to any insurance or self-insurance the FSA or Purchasers possess that may apply to a loss resulting from the work performed pursuant to this Contract. All insurance policies issued to cover the insurance requirements herein shall provide full coverage from the first dollar of exposure.

Vendor shall be fully liable for the actions of its agents, officers, employees, contractors, partners, subcontractors, and Third Party Suppliers, performing work under this Contract, and shall fully indemnify and hold harmless the Florida Sheriffs Association ("FSA"), the Purchasers, and each of their officers, agents, and employees from suits, actions, damages, and costs of every name and description, including legal counsels' fees and court costs, arising from or relating to negligence, omissions, personal injury or damage to real or personal tangible property alleged to be caused in whole or in part by Vendor, its agents, officers, employees, contractors, partners, subcontractors, and Third Party Suppliers; provided, however, that the Vendor shall not indemnify for that portion of any loss or damages resulting directly from the grossly negligent acts or omissions of the FSA or Purchasers or for that portion of any loss or damages proximately caused by intentional wrongful acts or omissions of the FSA or Purchasers.

All insurance policies shall be issued by companies authorized to do business under the laws of the State of Florida and these companies must have a rating of B+ or better per the AM Best Rating. At no time shall the Vendor be without insurance in the required amounts. No policy may be changed to provide for less coverage than is required or canceled during the term of this Contract without at least thirty (30) days' written notice to the FSA and/or Purchasers, as applicable.

The Vendor must specifically and distinctly assume, and does so assume, all risks of damage or injury to property or persons used or employed on or in connection with the work to be performed by Vendor pursuant to this Contract and of all damage or injury to any person or property wherever located, resulting from any action, omission or operation by the Vendor, its agents, officers, employees, contractors, partners, subcontractors, and Third Party Suppliers, under this Contract or in connection with the work contemplated herein. It is understood and agreed that at all times the Vendor, its agents,

officers, employees, contractors, partners, subcontractors, and Third Party Suppliers, are acting as independent contractors to the FSA and/or Purchasers, as applicable. Nothing in this Contract shall be interpreted or construed as creating or establishing the relationship of employer and employee between the FSA and/or Purchasers and the Vendor or any of its agents, officers, employees, contractors, partners, subcontractors, and Third Party Suppliers, or anyone directly or indirectly employed by the Vendor. The parties acknowledge that the Vendor is not an employee for State or Federal tax purposes. The Vendor shall hire and pay all of Vendor's employees, agents, subcontractors or anyone directly or indirectly employed by the Vendor, all of whom at all times being entirely under the Vendor's supervision, direction and control. The Vendor shall be responsible for the means, manner, and methods by which its duties, obligations, and responsibilities under this Contract are met to the satisfaction of the FSA and/or Purchasers, as applicable. The Vendor shall be responsible for every part of the work contemplated herein, and for all labor, expertise, materials, tools, appliances, and property of every description, used in connection with this Contract.

The Vendor will secure and maintain policies of Third Party Suppliers performing work or providing services and/or materials to or for Vendor in furtherance of Vendor's performance under this Contract. All Third Party Supplier insurance policies must be made available to the FSA and/or Purchasers upon written request. Compliance by the Vendor and all Third Party Suppliers with the foregoing requirements as to carrying insurance and furnishing copies of the insurance policies will not relieve the Vendor or any of its Third Party Suppliers of each of their liabilities and Purchasers for the acts and omissions of the Third Party Suppliers and of persons employed by the Third Party Suppliers as Vendor is for acts and omissions of persons directly employed by the Vendor.

The FSA and/or Purchasers may request, and upon such request the Vendor must furnish, proof of insurance, within seven (7) calendar days of receipt of the written request once the Contract times have commenced. Should the Vendor fail to provide acceptable evidence of current insurance during the Contract term, the FSA and/or Purchasers, as applicable, have the right, but not obligation, to consider the Contract breached and terminate the Contract effective immediately, in the sole discretion of the FSA and/or Purchasers, as applicable. If Vendor fails to have secured and maintained the required insurance, the FSA and/or Purchasers have the right to consider alternate insurance coverage proffered by the Vendor but has no obligation to do so.

The FSA and/or Purchasers will give the Vendor the opportunity to take over and settle or defend any such action at Vendor's sole expense. As permitted by law and within a reasonable time period, the FSA and/or Purchasers will give the Vendor written notice of an action or threatened action. Vendor will not be liable for commercially unreasonable costs, expenses or compromises incurred solely by the FSA, or Purchasers, in any legal action without Vendor's prior written consent, which consent shall not be unreasonably withheld, conditioned, or delayed.

The Comprehensive General liability insurance coverage and Automobile liability insurance coverage must extend to and include the following contractual indemnity and hold harmless agreement:

The Vendor hereby agrees to indemnify and hold harmless the FSA, a 501(c)3, its officers, agents, and employees from all claims for bodily injuries and for all damages to property, including tangible and intangible, per the insurance requirement under the specifications including costs of investigation, all expenses of litigation, including reasonable legal counsel fees (including paralegal and other expert and support service fees) and the cost of appeals arising out of any such claims or suits because of any and all acts, omissions or commissions by the Vendor, its agents, officers, employees, contractors, partners,

subcontractors, and Third Party Suppliers under the Contract FSA26-EQU24.0 Equipment.

The foregoing indemnity agreement must apply to any and all claims and suits other than claims and suits arising out of the sole and exclusive gross negligence of the FSA, its officers, agents, and employees, as determined by a court of competent jurisdiction.

The Vendor will notify the insurance agent without delay of the existence of the Hold Harmless Agreement contained within this Contract and furnish a copy of the Hold Harmless Agreement to the insurance agent and carrier.

The Vendor, at all times during the full duration of work under this Contract, including any extra or additional work approved by and consented to in writing by the parties in connection with this Contract, shall meet the requirements of the foregoing provisions.

2.04 SPECIFICATIONS

All items covered by this Invitation to Bid and the resulting Contract, and the specifications shall be the Manufacturer's current basic production model, and shall, as a minimum, be equipped with all standard factory equipment in accordance with the manufacturer's latest literature unless otherwise noted in the Bid System or FSA Base Specifications.

The FSA Base Specifications are contained in the FSA CPP Bid System, may be requested from the FSA CPP, and are retained within the FSA CPP's archive. As part of the bid submission, Bidders will be required to provide confirmation that the item bid meets the FSA Base Specification. The FSA CPP may reject bids that fail to provide confirmation that the item(s) bid meet the FSA Base Specifications.

The FSA CPP develops the specifications with subject matter experts and publicly available information. However, the FSA CPP does not have access to full details from the Manufacturer and relies on Bidders to assist in this process. Bidders should immediately notify the FSA CPP of any inaccuracies in the specifications. All notifications of inaccuracies must be in writing.

If awarded a Contract, Vendor(s) must offer and supply an item that either meets or exceeds all the requirements included in the applicable FSA Base Specifications, unless a Purchaser specifically issues a Purchase Order for a base item and option that differs from the FSA Base Specifications. Failure of a Vendor to comply with these provisions will result in Vendors being held responsible for all costs required to bring the item into compliance with the Contract specifications.

2.05 SEALED BIDS

For purposes of this solicitation, a sealed bid is considered a bid submitted using the FSA CPP Bid System.

2.06 MISTAKES

Bidders are expected to examine the FSA Base Specifications, delivery schedules, bid prices and all information pertaining to servicing this Contract before submitting a bid. Failure to do so will be at the Bidder's risk.

2.07 EXCEPTIONS

Any requested exceptions, deviations, or contingencies a Bidder may have to the Terms and Conditions must be documented in Bidder's submission. Exceptions to the FSA Base Specifications at the time of the bid submission shall reference the item number, make and model. The FSA CPP has the discretion to grant or deny, in whole or in part, the Bidder's requested exception, deviation or contingency to the specifications or Terms and Conditions. Bidder acknowledges that the bid may be disqualified if the FSA CPP rejects the proposed exceptions.

2.08 EQUIVALENTS

Prior to the opening of the Bid System, Bidders may request item equivalents. The Bidder must submit the Manufacturer name and model number (or product identifier) of each equivalent requested to the FSA CPP. Complete, descriptive, technical literature should demonstrate that the equivalent conforms with the FSA Base Specifications. If a bid uses equivalents without prior approval, the bid may be disqualified.

2.09 MANDATORY PRE-BID MEETING

Bidders are required to attend or participate in the mandatory Pre-Bid Meeting. The Pre-Bid Meeting is designed for Bidders, the Fleet Advisory Committee, and the FSA CPP to clarify questions on the Terms and Conditions and to confirm all FSA Base Specifications. Questions relating to the items, specifications, the bid process, or award can be asked at the Pre-Bid Meeting. Bidders have the opportunity to suggest technical modifications or corrections before the FSA Base Specifications are finalized.

The FSA CPP reserves the right to grant attendance exceptions to the mandatory Pre-Bid Meeting if the Bidder has requested authorization, agrees in writing to meet all the Terms and Conditions without exception and further waives their right to protest the bid process in its entirety or any portion thereof.

2.10 PRICES QUOTED

Items and options should reflect the most complete price and be below MSRP and at a minimum should cover the cost of the item or option bid.

Prices quoted in the bid submission should reflect the final amount the Bidder can expect to receive for payment for the items bid for the duration of the Contract, unless otherwise provided in the Contract.

Prices submitted as indicated in the sealed bid are final. Bidders acknowledge that prices quoted will be valid for a period of sixty (60) calendar days from the date of bid opening.

Each item, make, and model must be priced and bid separately. Prices must be inclusive of all the components included in the FSA Base Specification.

Prices bid must include the administrative fee the FSA CPP charges to administer the Contract, as outlined in these Terms and Conditions. The administrative fee is three quarters of one percent (.75%).

Prices bid must be at least cost, be Free on Board ("FOB") destination, and must include delivery to the Purchaser.

Upon award, the Vendor has the authority to offer additional discounts based on prompt payment, quantity, as well as additional Manufacturer or Vendor discounts.

2.11 OPTION PRICING

Option pricing must include the administrative fee. Bidders must provide a price for each option in addition to a percent below MSRP for factory-installed options or a percent above cost for other options.

The FSA CPP has the discretion to disqualify Bidders if the option pricing is excessive. In order to determine if pricing is excessive, Bidders and, if awarded a contract, Vendors agree to provide documentation to the FSA CPP to verify cost at any time during the solicitation process or during the Contract term. This information is for comparison purposes and will not be published.

Options are intended to add or delete equipment or features from the FSA Base Specifications. Options can provide an upgrade or downgrade to a Manufacturer's model and should not be made available for purchase separate from the base item. Options may only provide a downgrade to a Manufacturer's model when specifically requested in a Purchase Order issued in accordance with the Terms and Conditions by a Purchaser. Bidders shall NOT use options to create an item that is available as another item bid on this Invitation to Bid.

Example: A Vendor who is awarded the bid for a 150 kW Generator cannot offer an Automatic Transfer Switch as an option in order to circumvent the bid award for the Automatic Transfer Switches.

The use of options to facilitate the sale of an alternate Manufacturer's product which is outside the scope of the FSA Base Specifications will be determined non-responsive and the bid will be rejected in whole or part by the FSA CPP. Bidders must disclose which options require the purchase of other options or are dependent on another option in their bid submission.

Bidder must use proper Manufacturer codes for factory options. Options available through the factory should be bid as and supplied to Purchaser as factory options, unless otherwise requested in writing by the Purchaser. Factory package options are permitted under this Contract. Factory package options included in the bid submission must detail what components the package includes.

If the Bidder wishes to offer credit to the Purchaser for an option that is standard on the FSA Base Specifications, the Bidder should include the word “Credit” at the beginning of the description field and continue to describe the option being credited.
Loose Equipment can be bid as an option and made available to Purchasers for items originally purchased from this Contract. For purposes of this provision, “Loose Equipment” is any item of equipment that attaches to the heavy equipment item(s) included in the awarded bid, such as different sized blades. Loose Equipment does not include accessories, such as additional keys.

2.12 BID SUBMISSION

Bidders must submit a bid electronically using the Bid System. Bid submissions include a price for each item and option bid in accordance with Section 2.10, 2.11, 2.13. Each Bidder must submit a qualifications package for each bid. The bid must be received by the date and time specified on the Bid Calendar in Appendix B. Failure to meet all submission requirements by the date indicated on the Bid Calendar will result in rejection of the bid.

Bid System: VendorLink
The Bid System is located at https://www.myvendorlink.com. Bidders are encouraged to participate in training provided. Usernames and passwords will be issued to Bidders after registering in the Bid System. Contact VendorLink at support@evendorlink.com if technical issues arise during bid submission. Prices are to be rounded to the nearest whole dollar. If a Bidder submits bid pricing using cents, the following formula will be applied to round the bid pricing to the nearest whole dollar: $.01-.49 will be rounded down to the dollar bid (e.g., $50.49 = $50) and $.50-.99 will be rounded to the next dollar (e.g., $50.50 =$51).

Bid Submission
To ensure correct bid submittal and formatting, Bidders shall provide:

- Price for each item by zone.
- Upload files as instructed in the Bid System; files requested will be in .pdf format.
- Follow all instructions outlined in this Invitation to Bid and provide all requested information.

The bid shall include the following documents:

- Executed Qualifications Packet.
- Build sheet for each item bid as a single .pdf.
- Any requested exceptions or equivalents.

Option Upload

An option sheet should be submitted for each item bid. The Bid System will accept option information for each item through a .pdf file upload. Each option sheet should include a header to identify the FSA CPP Contract title and number, the Bidder name, item number, make and model. Each option sheet should include:

- Option
- Description
- Manufacturer order code or identifying code
- Price
- Percent discount from MSRP or list price

The FSA CPP may ask awarded Vendors to supply one (1) hard copy set with digital signatures and original compliance forms, prior to the Contract execution. Hard copy bids should not be submitted unless specifically requested by the FSA CPP. The FSA is not responsible for Bidder's improper use of the Bid System. Exceptions may be granted to Bidders by the FSA CPP pursuant this section should any Bid System malfunctions occur.

2.13 ZONE BIDDING

Bidders may bid in one or more geographic zones. Bidders must submit pricing for each zone they wish to be evaluated. The zone map is included in Appendix A. The geographic zones are in place to assist Bidders in estimating costs of delivery, which must be included in the price bid and quoted to the Purchaser.

2.14 EXECUTION OF BID

By submitting a response to this Invitation to Bid, the Bidder agrees to the Terms and Conditions and to be bound by such Terms and Conditions if selected for award. The Bidder must submit the Contract Signature Form with the signature of an authorized representative five (5) days prior to award. All Terms and Conditions are applicable throughout the term of the awarded Contract and are not specific to any given year, make or model.

2.15 MODIFICATION OR WITHDRAWALS OF BIDS

A Bidder may submit a modified bid to replace all or any portion of a previously submitted bid until the due date and time of the bid submission listed in the Bid Calendar. Modifications received after the bid due date and time will not be considered.

Bids can be withdrawn in writing prior to the Contract award. If a Bidder must withdraw the bid, the Bidder must contact the FSA CPP immediately. Bid withdrawals are handled on a case-by-case basis and can result in a limitation of participation in future bids.

2.16 LATE BIDS

The responsibility for submitting a bid before the due date and time on the Bid Calendar is solely and strictly the responsibility of the Bidder. The FSA is not responsible for delays caused by technical problems, any internet outages or delays incurred by electronic delivery, or any other occurrence. Any reference to time will be based on Eastern Time.

2.17 BID OPENING

Bids shall be opened on the date and time specified on the Bid Calendar. The bid opening may occur at the Florida Sheriffs Association, 2617 Mahan Drive, Tallahassee, Florida, or may be offered online.

The FSA CPP will provide a bid inspection period for Bidders following the bid opening. The date, time and duration will be announced prior to the bid opening.

2.18 DETERMINATION OF RESPONSIVENESS

Determination of responsiveness will take place at the time of bid opening and evaluation. In order to b e deemed a responsive Bidder, the bid must conform in all material respects to the requirements stated in the Invitation to Bid. As set forth in Section 2.22, the FSA CPP reserves the right to waive or allow a Bidder to correct minor irregularities.

2.19 RESPONSIBLE BIDDER CRITERIA

Bids will be evaluated to determine if qualifications and Contract requirements are met. Responses that do not meet all requirements of this Invitation to Bid or fail to provide all required information, documents or materials may be rejected as nonresponsive. The FSA CPP will not request documentation or consider a Bidder's social, political, or ideological interests in determining if the Bidder is a responsible Bidder. The FSA CPP will not give preference to a Bidder based on the Bidder's social, political, or ideological interests.

Bidders whose responses, past performance, or current status do not reflect the capability, integrity, or reliability to fully and in good faith perform the requirements of the Contract may be rejected as non-responsible. In determining a responsible Bidder, the following factors may be considered:

- Adequacy of facilities, staffing, and financial resources;
- Previous experience with the FSA Contract or other similar government contracts;
- Ability to provide excellent customer service, including on previous FSA contracts; and
- Any other information relevant to the responsibility of a Bidder of which the FSA CPP is aware.

In addition to the requirements set forth by these Terms and Conditions, the FSA CPP reserves the right

to request staffing, performance, and financial information from any Bidder during the evaluation process.

The FSA CPP reserves the right to determine which responses meet the requirements, specifications, Terms and Conditions of the solicitation, and which Bidders are responsive and responsible.

The FSA CPP further reserves the right to limit participation of Bidders who, in the FSA CPP's sole discretion, are determined to present responsibility concerns that call into question the Bidder's ability to perform but do not rise to the level of requiring rejection of the Bidder as non-responsible.

2.20 BASIS FOR AWARD

The FSA CPP shall make awards to the qualified, responsive, and responsible Bidder(s) who submitted the lowest price by item, Manufacturer, and zone. Awards may also be made to subsequent lowest responsive and responsible Bidders by item, Manufacturer, and zone, when determined to be in the best interest of the FSA and the Purchaser(s). The FSA CPP has the discretion to consider option pricing in making the award and to disqualify Bidders for proposing excessive option pricing.

Awards will not be given to any parties listed on the government wide exclusion in the System for Award Management.

The FSA CPP reserves the right to accept or reject any and all bids, and to waive any minor irregularity, technicality, or omission if it determines that doing so will serve the Purchaser's best interest. The FSA CPP reserves the right to make multiple awards for each item, if determined to be in the best interest of the FSA and the Purchasers.

Awards will be posted on the FSA CPP website according to the date posted in the Bid Calendar.

2.21 BID TABULATIONS

The Bid Tabulation report will be posted in the FSA CPP Bid System after the bid submission closes.
If there is a delay in posting the bid tabulation results, the FSA CPP will post a notice of the delay and a revised date for posting of results.

2.22 MINOR IRREGULARITIES/RIGHT TO REJECT

The FSA CPP has the right to accept or reject any and all bids, or separate portions thereof, and to waive any minor irregularity, technicality or omission if the FSA CPP determines that doing so will serve its best interest or the best interest of the Purchasers. A minor irregularity is a variation from the Terms and Conditions of this procurement that does not affect the price of the bid or give the Bidder a substantial advantage over other Bidders and thereby restrict or stifle competition and does not adversely impact the interests of the FSA or the Purchasers. At its option, the FSA CPP may allow a Bidder to correct minor irregularities but is under no obligation to do so. In doing so, the FSA CPP may request a Bidder to provide clarifying information or additional materials to correct the irregularity. However, the FSA CPP

will not request, and a Bidder may not provide the FSA CPP with additional materials that affect the price of the bid or give the Bidder an advantage or benefit not enjoyed by other Bidders.

The FSA CPP may also reject any bids not submitted in the manner specified in the Invitation to Bid.

2.23 CONE OF SILENCE

This Invitation to Bid is subject to the Cone of Silence that begins the date the bid submission opens through the intent to award date as indicated in the Bid Calendar. During this period, all communications regarding this solicitation between the FSA and Bidder will cease, except for procedural questions, questions regarding problems incurred in the use of the Bid System, or communications initiated by the FSA CPP. All permitted communications during this period shall be made in writing to the contacts identified in Section 1.01 of this Invitation to Bid.

3.0 CONTRACT CONDITIONS

3.01 GENERAL REQUIREMENTS

Once the bid has been awarded, the Terms and Conditions of this document become the Contract between the FSA and the awarded Vendor. The Terms and Conditions apply to all items purchased from this Contract.

3.02 STATEMENT OF AUTHORITY

Each person signing the Contract warrants that they are duly authorized to do so and binds the respective party to the Contract.

3.03 VENDOR CONTACT INFORMATION

The Vendor shall maintain current contact information with the FSA CPP at all times for sales and submission of Purchase Orders, quarterly reports, and administrative fee payments. If a change occurs during the term of this Contract, the Vendor must notify the FSA CPP immediately, and in all cases, no later than two (2) business days after Vendor becomes aware of the change.

3.04 ADDITIONS OR DELETIONS

The FSA CPP reserves the right to add or delete any items from the Vendor's bid or this Contract when deemed to be in the best interest of the FSA and Purchasers, at its discretion. This decision to take action may be based upon and not limited to few or no sales, product recalls and other safety issues, Vendor or Manufacturer performance, or the product's lack of relevance.

For items that come to market during the Contract term, the FSA CPP may authorize qualified and awarded Vendors to offer the new item under the existing Contract Terms and Conditions, if the Manufacturer authorizes a Vendor to sell the item. The FSA CPP will request awarded Vendors submit pricing and will evaluate the responses prior to authorizing awarded Vendors to offer the new item.

3.05 CONTRACT EXTENSION

Contract Extension

The Contract may be extended by mutual agreement for up to two (2) additional years, on a year-to-year basis. The FSA reserves the right to execute a contract extension or to allow the Contract to fully or partially terminate and readvertise for bids, whichever is in the best interest of the FSA.

The Vendor may request price adjustments for contract extensions as provided for herein. If no request is received from the Vendor, the FSA will assume that the Vendor has agreed that the optional term may be exercised without a price adjustment. Any adjustment request received after the execution of an extension may not be considered unless otherwise provided for in this Contract.

Month-to-Month Continuation

In the event a new contract is not active at the time of this Contract's expiration, this Contract's Terms and Conditions shall extend on a month-to-month basis and shall not constitute an implied extension of the Contract. Such a month-to-month continuation shall be upon the compensation and payment provided herein.

3.06 PRICE ADJUSTMENT

The Terms and Conditions provide the following options for price adjustments:

- Annual Price Adjustments
- Changes to Manufacturer Production or Design
- Manufacturer Certified Adjustments
- Equitable Adjustments

Price adjustment requests must clearly substantiate the need to increase or decrease the price. Price adjustments will not be considered if Vendors are delinquent on administrative fee payments or have outstanding quarterly reports.

Annual Price Adjustment

The FSA CPP may consider annual price adjustments due to:

- Changes in the Producer Price Index ("PPI") as published by the U.S. Department of Labor, Bureau of Labor Statistics ("BLS"); or
- As a result of changes to national or state standards that require substantial price adjustments.

The FSA CPP may consider other documentation related to the change to national or state standards but is not obligated to grant price changes without literature from the Manufacturer. The FSA CPP will consider the request and will make a final determination on the change in price.

Changes to Manufacturer Production or Design

Significant changes by the manufacturer to the production of and specification design may initiate a price adjustment request. The FSA CPP will consider order dates, production factors, model year, or other conditions, as well as the replacement or complete redesign of items. Vendors must provide documentation from the Manufacturer.

Manufacturer Certified Adjustments

Vendors must provide documentation from the Manufacturer to the FSA CPP that shows the additional costs or price adjustments imposed by the Manufacturer and substantiate the need for a related price adjustment for this Contract.

Equitable Adjustments
The FSA CPP, on behalf of the FSA, may make an equitable adjustment to the Contract terms or pricing at its discretion.

3.07 CONDITIONS

It is understood and agreed that any item offered or shipped as a result of this Contract shall be the most current model offered.

3.08 PRODUCTION CUTOFF

Vendors shall notify the FSA CPP in writing no less than sixty (60) calendar days prior to the close of final order date by the Manufacturer when the final order date is during the term of the Contract. Purchase Orders received by the Vendor ten (10) business days prior to the final order date must be accepted and entered the order system with the Manufacturer. Purchase Orders issued and received after the production cutoff date will be subject to availability. In this case, the Vendor and Manufacturer have the discretion whether to choose to provide next year's model at current year's prices until the end of the Contract term. If the Manufacturer cutoff date is during the term of the Contract and will affect the Purchaser's ability to obtain the items, the FSA CPP may consider substitutions from the same Manufacturer.

3.09 FACILITIES

The FSA CPP reserves the right to inspect the Vendor's facilities at any time with prior notice.

3.10 FACTORY-INSTALLED OPTIONS

All options specified as factory-installed are to be installed on the item at the primary site of assembly and are the Manufacturer's standard assembly-line product. Aftermarket and vendor-installed equipment will not be accepted as factory-installed. Vendors found supplying aftermarket or vendor-installed equipment where factory-installed are specified shall be required to retrieve all delivered items and supply new items meeting the specifications.

All factory-ordered options are to be OEM and installed at the primary site of assembly unless otherwise noted by the Vendor and acknowledged in writing by the Purchaser. Verbal agreements will not be recognized.

3.11 VENDOR-INSTALLED OPTIONS

All Vendor-installed accessories, equipment, or options shall be installed according to the Manufacturer's specifications. All Vendor-installed options must be manufactured by an established Manufacturer of the product provided. Vendors are required to disclose make and model of product being offered, the design and model must be approved by the Purchaser prior to installation. Prior to any purchase, the Vendor must also disclose the warranty of any accessory, equipment or option that is less than or exceeds the factory or equipment warranty coverage. Any Vendor that violates this provision will be considered in default of the Contract. The FSA CPP may terminate the Contract in accordance with these Terms and Conditions.

3.12 NON-SCHEDULED OPTIONS

A non-scheduled option is an option not listed on the FSA CPP published award. Vendors may provide non-scheduled options at less than MSRP or the Published List Price. Non-scheduled options should be identified and listed as a separate line item with the price and discount on the Purchase Order. Non-scheduled options are covered under these Terms and Conditions.

3.13 FORCE MAJEURE

A Vendor shall not be penalized for a delay resulting from the Vendor's failure to comply with delivery requirements if neither the fault nor the negligence of the Vendor or its employees contributed to the delay and the delay is due directly to acts of God, wars, acts of public enemies, strikes, fires, floods, or other similar cause wholly beyond the Vendor's control, or for any of the foregoing affecting the Vendor's Third Party Suppliers if no alternate source of supply is available to the Vendor.

3.14 PARTS

Vendors may sell repair and replacement parts. Parts pricing must include the administrative fee. If a Vendor wishes to offer parts under this Contract, the Vendor must provide a price list to the FSA and

offer a discount below MSRP or Published List Price. Bidders and/or Vendors, as applicable, may include parts pricing sheet with the bid submission or following award. Parts are listed as a separate item group and will be listed by Vendor. Bidders and/or Vendors, as applicable, may use the template offered in the bid system. Items listed below are required for the pricing sheet:

- Category
- Description
- MSRP or List Price discount percentage
- Exceptions to discount provided
- Quantity discounts

3.15 PURCHASE ORDERS

To initiate a purchase, a Purchase Order must be issued to the Vendor, which includes:

- The FSA CPP contract title and number;
- The FSA CPP item number;
- The make and model or item description; and
- Purchaser name, phone number and email address.

The Vendor's acceptance of a Purchaser's order will indicate that the Vendor agrees to deliver an awarded item that will be fully compatible with all of its options. Production schedules and delivery dates should be discussed at the time the quote is provided to the Purchaser, or if no quote is provided, when the Purchase Order is delivered to the Vendor. Vendor shall place the order with the Manufacturer within ten (10) business days of receipt of the Purchase Order. The Vendor shall ensure that all orders are placed in full compliance with the specifications and the Terms and Conditions of the Contract and the Purchase Order. Any changes that are required to bring an item into compliance with the various options due to an incorrect order will be accomplished at the Vendor's expense.

The Vendor should supply a Confirmation of Order to the Purchaser and the FSA CPP fifteen (15) calendar days from receipt of Purchase Order without request by the Purchaser. Any additional information needed to complete this form should be obtained by the Vendor from the Purchaser.

While it is recommended that a Purchaser purchase from the zone which is closest to their location, it is not mandatory to do so. If the Purchaser determines that a Vendor in another zone can better serve the Purchaser's needs, the Purchaser may order from a Vendor in another zone. Vendors that provide awarded items outside of an awarded zone may upon mutual agreement between the Vendor and the Purchaser charge a delivery fee.

If a Vendor receives a Purchase Order for an item for which they were not awarded, the Vendor must notify the Purchaser and return the Purchase Order to the Purchaser within three (3) business days.

The Vendor must submit electronic copies of Purchase Orders within fifteen (15) calendar days of the Purchase Order issue date. Purchase Orders should be submitted through the reporting tool provided by the FSA CPP. Purchase Orders received by the Vendor after this deadline must be submitted to the FSA

CPP as soon as possible with the date received by the Vendor and cause of the delay. Purchase Orders should contain the following required information:

- Purchaser name,
- Purchase Order number,
- Purchase Order issue date,
- The FSA CPP contract title and number,
- Item number,
- Item make and model, or item description,
- Item price,
- Options by item, and
- Estimated delivery date.

Purchase Orders vary in format and information provided. If a Purchase Order does not include the required information, the Vendor must submit supplemental documentation to the FSA CPP at the same time the Purchase Order is due. Such information may be in bid quotes, equipment proposals, confirmation of orders, or other documents. If a Purchaser does not use Purchase Orders, written communication from the Purchaser to the Vendor will be provided to the FSA CPP.

3.16 DELIVERY

Vendors are to inspect the item to confirm whether the item meets or exceeds the FSA Base Specification, Manufacturer specification, and Purchase Order. Deliveries not complying with these requirements may be rejected and will have to be redelivered at Vendor's expense.

Delivery shall be within the normal working hours of the user, Monday through Friday, excluding holidays. Delivery schedules shall be agreed to by the Purchaser and the Vendor. Vendor shall notify the Purchaser no less than twenty-four (24) hours prior to delivery of the time and location, which shall reflect the mutually agreed upon delivery details. The Vendor shall be responsible for delivering items that are properly serviced, clean and in first class operating condition. Items shall be delivered with each of the following documents completed or included:

1. Copy of the Purchase Order.
2. Copy of the FSA Base Specification.
3. Copy of Manufacturer's invoice, price sheet, build sheet or other documentation that verifies what components are included on the item being delivered
4. Copy of the pre-delivery service report
5. Registration warranty certification
6. Owner's manual
7. Registration, tag and title or an application for the registration, as applicable

All items with fuel tanks of thirty-five (35) gallons or less must contain no less than one quarter (1/4) tank of fuel as indicated by the fuel gauge at the time of delivery. For items that have more than thirty-five (35) gallons, a minimum of one eighth (1/8) of a tank of fuel must be provided. All electric utility vehicles and battery powered items must be delivered with a minimum charge level of ten percent

(10%).

Items with hour meters must be delivered with fewer than five (5) hours on the hour meter or may be rejected by the Purchaser. The Purchaser may choose to negotiate a lower purchase price when the item exceeds five (5) hours.

When items require service or adjustments upon delivery, the Vendor shall either remedy the defect or be responsible for reimbursing the Manufacturer's local authorized representative or other service provider to remedy the defect. Such service or adjustments shall be initiated by the Vendor within forty-eight (48) hours after notification by a Purchaser, not to include weekends and holidays. Delivery will not be considered complete until all services or adjustments are satisfactory, and the item is redelivered or repaired. The cost of any transportation required to address the defect shall be the responsibility of the Vendor until the items are satisfactory and accepted by the Purchaser.

3.17 INSPECTION AND ACCEPTANCE

Final acceptance shall be given only after the Purchaser inspects or confirms the item meets Contract specifications. Delivery of an item to a Purchaser does not constitute acceptance for the purpose of payment. Inspection and acceptance will be at the Purchaser's destination unless otherwise previously agreed upon location was provided in the Purchase Order. Should the delivered items differ in any respect from the FSA Base Specifications, payment can be withheld until such time as the Vendor completes the necessary corrective action.

3.18 INVOICING AND PAYMENTS

Invoicing and payments shall be the responsibility of the Vendor and Purchaser placing orders using this Contract. Vendors must invoice each Purchaser independently. The Vendor shall be paid upon submission of invoices to the Purchaser after satisfactory delivery and acceptance of the items. While the Local Government Prompt Payment Act applies to ensure timely payment of Vendor invoices, the FSA CPP encourages Purchasers to make payment within thirty (30) days of acceptance of the item. The Local Government Prompt Payment Act is defined in Sections 218.70–218.79, *Florida Statutes*.

3.19 WARRANTY

All warranties shall begin at the time of commission and final acceptance by the Purchaser. The Purchaser's warranty should not be active for incomplete items and items delivered to a Third Party Supplier before final delivery.

Vendors should communicate with Purchasers on the required process for the registration of the warranty. Registration of the items may be required by the Manufacturer to activate the warranty. Warranty registration may vary based on the commissioning of the items. Vendors and Purchasers should follow any activation process outlined by the Manufacturer. Exceptions may exist for non-networked items.

3.20 QUARTERLY REPORTS

Quarterly reports are the contractual responsibility of each Vendor. Quarterly reports must be completed and submitted electronically. The quarterly report template shall be submitted using the tool provided by the FSA CPP. Quarterly reports which do not adhere to the required format or are not complete with all Purchase Orders received and/or deliveries made during the quarter will be returned to the reporting Vendor for correction.

Quarterly reports are due no later than the 15th day of the month following the end of the quarter. Quarterly reports shall follow the schedule below for the duration of the Contract. If a Contract extension is executed, the quarterly reports will maintain the same schedule for future reporting periods.

Contract Year 1: October 1, 2026 – September 30, 2027

Year 1 Quarter 1:	October 1 – December 31	Q1 Report Due:	January 15
Year 1 Quarter 2:	January 1 – March 31	Q2 Report Due:	April 15
Year 1 Quarter 3:	April 1 – June 30	Q3 Report Due:	July 15
Year 1 Quarter 4:	July 1 – September 30	Q4 Report Due:	October 15

Contract Year 2: October 1, 2027 – September 30, 2028

Year 2 Quarter 1:	October 1 – December 31	Q1 Report Due:	January 15
Year 2 Quarter 2:	January 1 – March 31	Q2 Report Due:	April 15
Year 2 Quarter 3:	April 1 – June 30	Q3 Report Due:	July 15
Year 2 Quarter 4:	July 1 – September 30	Q4 Report Due:	October 15

Quarterly reports must be submitted even if there are no sales or no deliveries in a quarter. If a Vendor has no sales within a quarter, the Vendor shall indicate “No sales this quarter” or “No deliveries this quarter” to the FSA CPP by e-mail to Reports@flsheriffs.org.

The FSA CPP reserves the right to modify the procedure for submitting quarterly reports during the term of the Contract.

Such a change shall not materially modify the substance of the information to be reported but may change the method by which future quarterly reports are to be submitted. In the event of such a change, the FSA CPP will provide written notice to all Vendors of the method by which future quarterly reports are to be submitted.

3.21 ADMINISTRATIVE FEE

The FSA CPP charges three quarters of one percent (.75%) to procure, process and administer the Contract. Payment of the administrative fees to the FSA CPP is the contractual responsibility of each awarded Vendor.

After receipt of payment from Contract purchases, the Vendor shall remit all administrative fees to the FSA CPP no later than fifteen (15) calendar days after the end of each quarter. All fees payable to the FSA CPP during any given quarter will be accompanied and supported by a quarterly report.

The administrative fee will remain payable to the FSA CPP and no relief from payment of the administrative fee, nor any additional charge to recoup the administrative fee will be permitted if a Vendor fails to incorporate the administrative fee in its bid pricing. The administrative fee should never be listed as a separate line item on any Purchase Order or invoice.

The administrative fee is based on the total Purchase Order amount of new items. This fee excludes any value given to Purchasers for trade-ins. Trade-ins, extended warranties and other exchanges will not reduce or impact the fee calculation.

The ACH form for electronic payment or wiring of funds is included in Appendix C. It is the preference of the FSA CPP that all payments be electronically paid and submitted. If ACH is not available, checks for the administrative fee can be sent to:

Florida Sheriffs Association
Cooperative Purchasing Program
2617 Mahan Drive
Tallahassee, FL 32308

3.22 LIQUIDATED DAMAGES

The Vendor warrants that the item supplied to the Purchaser shall conform in all respects to the standards set forth in the applicable FSA Base Specifications and the failure to comply with this condition will be considered as a breach of Contract. Any liquidated damages levied because of inadequacies or failures to comply with these requirements shall be borne solely by the Vendor responsible for same.

Failure to submit the administrative fee with accompanying quarterly reports to the FSA CPP within fifteen (15) calendar days following the end of each quarter may result in the imposition of liquidated damages. Vendors failing to submit administrative fees and/or quarterly reports will incur liquidated damages in the amount of $25.00 for each calendar day that fees and reports are past due, beginning on the 16th day following the end of the quarter.

If a civil action is initiated by the FSA to recover administrative fees or liquidated damages as set forth in this section, the prevailing party shall be entitled to its reasonable attorneys' fees and costs incurred in the litigation. The venue shall lie in the Circuit Court for the Second Judicial Circuit in and for Leon County, Florida.

When quarterly reports are late, liquidated damages are to be included in Vendor's Quarterly Report and administrative fee submission. Liquidated damages that remain unpaid beyond forty-five (45) calendar days can result in the FSA CPP, on behalf of the FSA, at its sole discretion, implementing contract compliance actions, including but not limited to, suspension, limited participation by items or

zones, disqualification from future solicitations, or termination of this Contract for cause pursuant to the Terms and Conditions.

Schedule of Liquidated Damages

Failure to communicate change of contact	$250.00 per infraction
Failure to communicate terminations of a product line	$25.00 per calendar day
Failure to communicate changes in assignment of contract	$25.00 per calendar day
Failure to submit quarterly report on time	$25.00 per calendar day
Failure to submit administrative fee on time	$25.00 per calendar day
Failure to report a Purchase Order to the FSA CPP within fifteen (15) calendar days of the Purchase Order issue date	$100.00 per Purchase Order
Failure to Report Sales	.0075 of the sales price plus 1.5% each month following the delivery date.

Vendor agrees and acknowledges that its failure to take any of the actions specified in the above schedule will result in liquidated damages to this Contract. Vendor agrees and acknowledges that these liquidated damages are not intended to be and do not constitute a penalty and that these amounts are reasonably calculated to compensate the FSA CPP for the damages that it will incur as a result of the Vendor's failure to take the specified actions.

Appendix A: Zone Map



WESTERN
BAY
CALHOUN
DIXIE
ESCAMBIA
FRANKLIN
GADSDEN
GULF
HOLMES
JACKSON
JEFFERSON
LAFAYETTE
LEON
LIBERTY
MADISON
OKALOOSA
SANTA ROSA
TAYLOR
WALTON
WAKULLA
WASHINGTON

NORTHERN
ALACHUA
BAKER
BRADFORD
CLAY
COLUMBIA
DUVAL
FLAGLER
GILCHRIST
HAMILTON
LEVY
MARION
NASSAU
PUTNAM
ST. JOHNS
SUWANEE
UNION
VOLUSIA

CENTRAL
BREVARD
CITRUS
DESOTO
HARDEE
HERNANDO
HIGHLANDS
HILLSBOROUGH
INDIAN RIVER
LAKE
MANATEE
OKEECHOBEE
ORANGE
OSCEOLA
PASCO
PINELLAS
POLK
ST. LUCIE
SARASOTA
SEMINOLE
SUMTER

SOUTHERN
BROWARD
CHARLOTTE
COLLIER
GLADES
HENDRY
LEE
MARTIN
MIAMI-DADE
MONROE
PALM BEACH

Appendix B: Bid Calendar

FSA26-EQU24.0 Bid Calendar	Date
Bid Announcement	3/30/2026
Voluntary Interested Bidder Workshop FSA26-EQU24.0	6/3/2026
New Items & Specifications Submissions Due	6/12/2026
Mandatory Pre-Bid Meeting FSA26-EQU24.0 and VendorLink Training	7/14/2026
Requests for Clarifications Due to the FSA	7/24/2026
The FSA Response to Requests for Clarifications	7/29/2026
Bid System Opens	7/31/2026
Cone of Silence	7/31/2026 - 9/23/2026
Bid Submissions Due	9/01/2026
Bid Tabulations Posted	9/02/2026
Public Bid Opening	9/02/2026
Bid Evaluations	9/8/2026 - 9/11/2026
Intent To Award	9/23/2026
Final Award	10/1/2026

Appendix C: ACH Payments

PROTECTING, LEADING & UNITING SINCE 1893
FLORIDA SHERIFFS ASSOCIATION

2617 Mahan Drive
Tallahassee, Florida 32308

p: (850) 877-2165 f: (850) 878-8665
flsheriffs.org

TO: All Customers of the Florida Sheriffs Association

SUBJECT: Automated Payments through ACH

The Florida Sheriffs Association values the integrity of our business operations and knows that our partners do as well. As we continue to strengthen this partnership, FSA invites each company to offer payments to FSA via ACH. It is our goal to secure payments and reduce fraudulent transactions and this will be our primary method of accepting payments due to recent efforts to defraud FSA. Florida Sheriffs Association can be added to your company's list of vendors authorized to be paid via electronic payment for no additional fee.

Florida Sheriffs Association's Banking Information is as follows:

Checking Account
Capital City Bank
Routing Number: 063100688
Account Number: 0010867001

Please email any payment remittance information to accounting@flsheriffs.org.

If you choose to make ACH payments to the association, there is no additional charge. The information above can be used to pay with a wire transfer as well, but if you choose to pay via wire, there is a charge of $25 per wire that you will need to add to your payment.

If you have any questions at all, please contact FSA Accounting at accounting@flsheriffs.org or 850-877-2165.

Sincerely,

Trish Eldridge

Director of Accounting and Finance
Florida Sheriffs Association

Appendix D: Federal Clause

Applicability of Third-Party Contract Provisions*

(Excluding micro-purchases, as defined in 48 C.F.R. Subpart 2.1, except Davis-Bacon requirements apply to construction contracts exceeding $2,000.) In addition to other provisions negotiated with Purchasers placing federally funded purchase orders, Vendors must comply with the following provisions upon award of a federally funded purchase order:

PROVISION	Professional Services/A&E	Operations/ Management	Construction	Materials & Supplies
Equal Employment Opportunity			All	
Davis-Bacon Act			>$2,000	
Copeland "Anti-Kickback" Act			>$2,000	
Contract Work Hours and Safety Standards Act	>$100,000	>$100,000	>$100,000	>$100,000
Rights to Inventions Made Under a Contract or Agreement	If the purchase order involves performance of experimental, developmental or research work	If the purchase order involves performance of experimental, developmental or research work	If the purchase order involves performance of experimental, developmental or research work	If the purchase order involves performance of experimental, developmental or research work
Clean Air Act	>$150,000	>$150,000	>$150,000	>$150,000
Federal Water Pollution Control Act	>$150,000	>$150,000	>$150,000	>$150,000
Debarment and Suspension	All	All	All	All
Byrd Anti-Lobbying Amendment	>$100,000	>$100,000	>$100,000	>$100,000
Procurement of Recovered Materials	All	All	All	All
Prohibition on Certain Telecommunications and Video Surveillance Services or Equipment	All	All	All	All
Domestic Preferences for Procurements	All	All	All	All

*References to the Code of Federal Regulations ("C.F.R.") or United States Code ("U.S.C.") were accurate

at the time of publication. It is the responsibility of the Bidder to ensure compliance is met of the referenced state and federal laws within the published rules.

EQUAL EMPLOYMENT OPPORTUNITY: Except as otherwise provided under 41 C.F.R. Part 60, all contracts that meet the definition of "federally assisted construction contract" in 41 C.F.R. Part 60-1.3 must include the equal opportunity clause provided under 41 C.F.R. 60-1.4(b), in accordance with Executive Order 11246, "Equal Employment Opportunity" (30 FR 12319, 12935, 3 C.F.R. Part, 1964-1965 Comp., p. 339), as amended by Executive Order 11375, "Amending Executive Order 11246 Relating to Equal Employment Opportunity," and implementing regulations at 41 C.F.R. part 60, "Office of Federal Contract Compliance Programs, Equal Employment Opportunity, Department of Labor." The clause set forth in 41 C.F.R. 60-1.4(b) is incorporated herein by reference. Vendor must comply with this clause and include this clause in all lower-tier federal assisted construction contracts.

DAVIS-BACON ACT, as amended (40 U.S.C. 3141-3148): When required by Federal program legislation, all prime construction contracts in excess of $2,000 awarded by non-Federal entities must include a provision for compliance with the Davis-Bacon Act (40 U.S.C. 3141-3144, and 3146-3148) as supplemented by Department of Labor regulations (29 C.F.R. Part 5, "Labor Standards Provisions Applicable to Contracts Covering Federally Financed and Assisted Construction"). In accordance with the statute, contractors must be required to pay wages to laborers and mechanics at a rate not less than the prevailing wages specified in a wage determination made by the Secretary of Labor. In addition, contractors must be required to pay wages not less than once a week. The non-Federal entity must place a copy of the current prevailing wage determination issued by the Department of Labor in each solicitation. The decision to award a contract or subcontract must be conditioned upon the acceptance of the wage determination. The non-Federal entity must report all suspected or reported violations to the Federal awarding agency. The contracts must also include a provision for compliance with the Copeland "Anti-Kickback" Act (40 U.S.C. 3145), as supplemented by Department of Labor regulations (29 C.F.R. Part 3, "Contractors and Subcontractors on Public Building or Public Work Financed in Whole or in Part by Loans or Grants from the United States"). The Act provides that each contractor or subrecipient must be prohibited from inducing, by any means, any person employed in the construction, completion, or repair of public work, to give up any part of the compensation to which he or she is otherwise entitled. The non-Federal entity must report all suspected or reported violations to the Federal awarding agency. Vendors performing construction must comply with all applicable provisions of the Davis-Bacon Act and include this clause in all lower-tier subcontracts for construction.

CONTRACT WORK HOURS AND SAFETY STANDARDS ACT (40 U.S.C., chapter 37): Vendor shall comply with Sections 102 and 107 of the Contract Work Hours and Safety Standards Act (40 U.S.C., chapter 37), as supplemented by Department of Labor regulations (29 C.F.R. part 5).

a. Overtime requirements. Neither Vendor nor any contractor or subcontractor contracting for any part of the purchase order work which may require or involve the employment of laborers or mechanics shall require or permit any such laborer or mechanic in any workweek in which he or she is employed on such work to work in excess of forty hours in such workweek unless such laborer or mechanic receives compensation at a rate not less than one and one-half times the basic rate of pay for all hours worked in excess of forty hours in such workweek.

b. Violation; liability for unpaid wages; liquidated damages. In the event of any violation of the clause set forth in Paragraph (a), Vendor and any subcontractor responsible therefore shall be liable for the unpaid wages. In addition, Vendor or such subcontractor shall be liable to the United States (in the case of work done under the Contract for the District of Columbia or a

territory, to such District or to such territory), for liquidated damages. Such liquidated damages shall be computed with respect to each individual laborer or mechanic, including watchmen and guards, employed in violation of the clause set forth in Paragraph (a), in the amount set forth in 29 C.F.R. § 5.5(b)(2), as adjusted annually for inflation, for each calendar day on which such individual was required or permitted to work in excess of the standard workweek of forty hours without payment of the overtime wages required by the clause set forth in Paragraph (a) of this section.

c. Withholding for unpaid wages and liquidated damages. Purchaser shall upon its own action or upon written request of an authorized representative of the Department of Labor withhold or cause to be withheld, from any moneys payable on account of work performed by Vendor or a subcontractor under the purchase order or any other Federal contract with Purchaser, or any other federally-assisted contract subject to the Contract Work Hours and Safety Standards Act, which is held by Purchaser, such sums as may be determined to be necessary to satisfy any liabilities of Vendor or its subcontractor for unpaid wages and liquidated damages as provided in the clause set forth in Paragraph (a).

d. Subcontracts. Vendor shall insert in any subcontracts over $100,000 for construction and other purposes that involve the employment of mechanics or laborers, the clauses set forth in Paragraphs (a) through (d) and also a clause requiring the subcontractors to include these clauses in any lower-tier subcontracts.

RIGHTS TO INVENTIONS MADE UNDER A CONTRACT OR AGREEMENT: If the Federal award meets the definition of "funding agreement" under 37 C.F.R. § 401.2 (a) and the recipient or subrecipient wishes to enter into a contract with a small business firm or nonprofit organization regarding the substitution of parties, assignment or performance of experimental, developmental, or research work under that "funding agreement," the recipient or subrecipient must comply with the requirements of 37 C.F.R. Part 401, "Rights to Inventions Made by Nonprofit Organizations and Small Business Firms Under Government Grants, Contracts and Cooperative Agreements," and any implementing regulations issued by the awarding agency. Vendor shall comply with these requirements when performing a purchase order involving experimental, developmental or research work and flow down this clause to lower-tier subcontractors performing such work.

CLEAN AIR ACT (42 U.S.C. 7401 et seq.) and the FEDERAL WATER POLLUTION CONTROL ACT (33 U.S.C. 1251 et seq.), as amended: Vendor agrees to comply with all applicable standards, orders or regulations issued pursuant to the Clean Air Act (42 U.S.C. 7401 et seq.) and the Federal Water Pollution Control Act as amended (33 U.S.C. 1251 et seq.). Violations shall be reported to the Federal awarding agency and the Regional Office of the Environmental Protection Agency (EPA). Vendor shall comply with the requirements of Clean Air Act and the Federal Water Pollution Control Act and include this clause in all lower-tier subcontracts with a value over $150,000.

DEBARMENT AND SUSPENSION (E.O.s 12549 and 12689): By accepting or performing this purchase order, Vendor certifies that it is not identified in the Exclusions area of the System for Award Management as being currently debarred, suspended, proposed for debarment, or otherwise excluded ("SAM Exclusion"). Vendor shall obtain similar certifications from its lower-tier subcontractors for each subcontract in excess of $25,000 and Vendor shall not award lower-tier subcontracts in excess of $25,000 to an entity subject to a SAM Exclusion.

LOBBYING RESTRICTIONS (31 U.S.C. 1352): By accepting or performing this purchase order, Vendor certifies that it will not and has not used Federal appropriated funds to pay any person or organization

for influencing or attempting to influence an officer or employee of any agency, a member of Congress, officer or employee of Congress, or an employee of a member of Congress in connection with obtaining any Federal contract, grant or any other award covered by 31 U.S.C. 1352. Vendor shall also disclose to Purchaser any lobbying with non-Federal funds that takes place in connection with obtaining any Federal award or contract. Vendor shall flow down this clause and require this certification for lower-tier subcontractors with a subcontract of $100,000 or more. Vendor shall provide its disclosure and all disclosures received from lower-tier subcontractors to Purchaser.

PROCUREMENT OF RECOVERED MATERIALS: A Non-Federal entity that is a state agency or agency of a political subdivision of a state and its contractors must comply with section 6002 of the Solid Waste Disposal Act, as amended by the Resource Conservation and Recovery Act. The requirements of Section 6002 include procuring only items designated in guidelines of the Environmental Protection Agency ("EPA") at 40 C.F.R. part 247 that contain the highest percentage of recovered materials practicable, consistent with maintaining a satisfactory level of competition, where the purchase price of the item exceeds $10,000 or the value of the quantity acquired during the preceding fiscal year exceeded $10,000; procuring solid waste management services in a manner that maximizes energy and resource recovery; and establishing an affirmative procurement program for procurement of recovered materials identified in the EPA guidelines. Vendors shall comply with this clause and include this clause in all lower-tier subcontracts.

PROHIBITION ON CERTAIN TELECOMMUNICATIONS AND VIDEO SURVEILLANCE SERVICES OR EQUIPMENT:

a. Recipients and subrecipients are prohibited from obligating or expending loans or grant funds to:

1. Procure or obtain;
2. Extend or renew a contract to procure or obtain; or
3. Enter into a contract (or extend or renew a contract) to procure or obtain equipment, services, or systems that uses covered telecommunications equipment or services as a substantial or essential component of any system, or as critical technology as part of any system. As described in Public Law 115-232, section 889, covered telecommunications equipment is telecommunications equipment produced by Huawei Technologies Company or ZTE Corporation (or any subsidiary or affiliate of such entities).

   i. For the purpose of public safety, security of government facilities, physical security surveillance of critical infrastructure, and other national security purposes, video surveillance and telecommunications equipment produced by Hytera Communications Corporation, Hangzhou Hikvision Digital Technology Company, or Dahua Technology Company (or any subsidiary or affiliate of such entities).

   ii. Telecommunications or video surveillance services provided by such entities or using such equipment.

   iii. Telecommunications or video surveillance equipment or services produced or provided by an entity that the Secretary of Defense, in consultation with the Director of the National Intelligence or the Director of the Federal Bureau of Investigation, reasonably believes to be an entity owned or controlled by, or otherwise connected to, the government of a covered foreign country.

b. In implementing the prohibition under Public Law 115-232, section 889, subsection (f), paragraph (1), heads of executive agencies administering loan, grant, or subsidy programs shall

prioritize available funding and technical support to assist affected businesses, institutions and organizations as is reasonably necessary for those affected entities to transition from covered communications equipment and services, to procure replacement equipment and services, and to ensure that communications service to users and customers is sustained.

c. See Public Law 115-232, section 889, for additional information.

DOMESTIC PREFERENCES FOR PROCUREMENTS:

a. As appropriate and to the extent consistent with law, the non-Federal entity should, to the greatest extent practicable under a Federal award, provide a preference for the purchase, acquisition, or use of goods, products, or materials produced in the United States (including but not limited to iron, aluminum, steel, cement, and other manufactured products). Vendor agrees to comply with the requirements of this clause and includes the requirements of this clause in all subawards including all contracts and purchase orders for work or products under this award.

b. For purposes of this section:

1. "Produced in the United States" means, for iron and steel products, that all manufacturing processes, from the initial melting stage through the application of coatings, occurred in the United States.
2. "Manufactured products" means items and construction materials composed in whole or in part of non-ferrous metals such as aluminum; plastics and polymer-based products such as polyvinyl chloride pipe; aggregates such as concrete; glass, including optical fiber; and lumber.

FSA Cooperative Purchasing Program



FSA26-EQU24.0: Equipment
Base Specifications

FSA26-EQU24.0: Equipment
Item Group Specifications

Item Groups Summary

All bid items shall be built to meet or exceed FSA Cooperative Purchasing Program base specifications and shall include all standard manufacturer equipment unless otherwise specified. When requested by the purchaser, vendors must submit detailed specifications for the item and options offered.

- All Terrain & Utility Vehicles: All Terrain Vehicles (Quad)
- All Terrain & Utility Vehicles: Utility Vehicles (Side-by-Side)
- All Terrain & Utility Vehicles: Electric Utility Vehicles (Side-by-Side)
- Blower: Ride On Blower*
- Boat: Aquatic Weed Cutter Workboat
- Bulldozer: 70hp
- Bulldozer: 90hp
- Bulldozer: 180hp
- Chipper: Brush Chipper
- Compactor: 80,000 lbs. Landfill Compactor
- Compressor: Air Compressor - Trailer Mounted
- Dump Truck: Articulating Off Road Dump Truck - 50,000 lbs. Payload
- Excavator: All Terrain Walking Excavator
- Excavator: Hydraulic Excavator - 15,590 lbs. Operating Weight
- Excavator: Hydraulic Excavator - 38,000 lbs. Operating Weight
- Excavator: Hydraulic Excavator - 76,550 lbs. Operating Weight
- Excavator: Mini Hydraulic Excavator - 7,105 lbs. Operating Weight
- Excavator: Telescopic Excavator - 45,000 lbs. Operating Weight - Tracked Type
- Excavator: Telescopic Excavator - 47,000 lbs. Operating Weight - 6x6 Wheeled Type
- Excavator: Vacuum Excavator - Trailer Mounted
- Excavator: Vacuum Excavator Body, Truck Mounted - 12 cubic yd.*
- Excavator: Wheeled Hydraulic Excavator - 42,000 lbs. Operating Weight
- Forklift: Cushion Tire - 4,000 lbs. Capacity
- Forklift: Rough Terrain Forklift - 5,000 lbs. Capacity
- Forklift: Telescopic Tool Carrier/Telehandler

- Generator: 60kW Stationary
- Generator: 125kW Stationary
- Generator: 150kW Mobile
- Generator: 500kW Mobile
- Generator: 500kW Stationary
- Horizontal Directional Drill
- Leaf Collector: Trailer Mounted
- Lift: Articulated Boom Lift - Self Propelled Tracked*
- Lift: Scissor Lift - Self Propelled
- Light Tower: Hybrid Light Tower
- Light Tower: Light Tower - Trailer Mounted
- Loader: Loader Backhoe - 4x4
- Loader: Mini Skid Steer - 1,000 lbs. Operating Capacity - Tracked Type, Stand Up Operator*
- Loader: Skid Steer - 1,850 lbs. Operating Capacity - Wheeled Type
- Loader: Skid Steer - 2,800 lbs. Operating Capacity - Wheeled Type
- Loader: Skid Steer - 3,100 lbs. Operating Capacity - Tracked Type
- Loader: Wheel Loader - 1.5 cubic yd.
- Loader: Wheel Loader - 3.0 cubic yd.
- Loader: Wheel Loader - 5.75 cubic yd.
- Low Speed Vehicle: Electric Type
- Motor Grader: Large
- Motor Grader: Small
- Mower: 15ft. Flex Wing Rotary Mower
- Mower: Remote Controlled Brush Mower
- Mower: Electric Zero Turn Radius Mower
- Mower: Zero Turn Radius Mower
- Pallet Jack: Electric 4,500 lbs. Capacity
- Pipe Inspection: Battery Operated Pipe Crawler Inspection System
- Pipe Inspection: External Power Pipe Crawler Inspection System*
- Portable Signal: Portable Signal - Trailer Mounted*

FSA26-EQU24.0: Equipment
Item Group Specifications

- Pump: Mobile Pump
- Roadway Advisory Board: Message Board/Automatic License Plate Reader*
- Roadway Advisory Board: Mobile Message Board
- Roadway Advisory Board: Mobile Speed Board
- Roadway Advisory Board: Mobile Speed Board/Automatic License Plate Reader
- Roadway Advisory Board: Mobile Traffic Advisory/Direction Signal Board
- Roller: Compact 2,900 lbs. - Double Drum Roller - 38in. Width*
- Roller: Compact, Pneumatic Asphalt Roller*
- Roller: Compaction Roller 15,000 lbs. - Single Drum
- Roller: Large 22,000 lbs. - Double Drum Roller - 70in. Width
- Roller: Small 5,400 lbs. - Double Drum Roller - 47in. Width
- Security Camera: Security Camera Tower - Trailer Mounted*
- Sewer Cleaner: Combination Sewer Cleaning/Vacuum Machine Body - 10 cubic yd.
- Sewer Cleaner: Easement Machine*
- Sewer Cleaner: Trailer Mounted Sewer Cleaner
- Shop Tools & Equipment
- Shredder: Mobile Shredder/Grinder
- Simulator System: Equipment Operator Simulator*
- Solid Waste Material Handler: Wheeled Type
- Stump Cutter
- Sweeper: 3-Wheel Mechanical or Regenerative Air Sweeper
- Sweeper: Mechanical Broom Street Sweeper
- Sweeper: Compact Air Sweeper - 2.3 cubic yd.
- Sweeper: Regenerative Air Street Sweeper
- Sweeper: Self-Propelled Hydrostatic Broom
- Sweeper: Tow Behind Beach Sweeper*
- Sweeper: Vacuum Street Sweeper*
- Sweeper: Walk Behind Floor Sweeper/Scrubber*
- Tactical Vehicle: Skid Steer Mounted (The Rook)
- Tool Carrier: Hydrostatic Drive
- Tractor: Agriculture Tractor - 4x2

FSA26-EQU24.0: Equipment
Item Group Specifications

- Tractor: Compact Articulating Tractor - AWD
- Tractor: Small Agriculture Tractor - 4x4
- Tractor: Tractor with Boom Mower - 4x4
- Trailer: Container Chassis Trailer - 73,900 lbs. GVWR*
- Trailer: Deck Over Flatbed Trailer - 14,000 lbs. GVWR
- Trailer: Deck Over Equipment Trailer - 40,000 lbs. GVWR
- Trailer: Detachable Neck Lowboy Trailer - 100,000 lbs. GVWR
- Trailer: Enclosed Cargo Trailer - 7,000 lbs. GVWR
- Trailer: Flatbed Tilt Trailer - 40,000 lbs. GVWR*
- Trailer: Fixed Neck Lowboy Trailer - 70,000 lbs. GVWR
- Trailer: Hydraulic Drop Deck Trailer - 13,500 lbs. GVWR
- Trailer: Hydraulic Tail Trailer - 70,000 lbs. GVWR
- Trailer: Leachate Tanker - 6,500 gallons
- Trailer: Livestock Trailer - 7,000 lbs. GVWR
- Trailer: Mobile Fuel Trailer - 460 gallons*
- Trailer: Multi Tank Fuel/Service 880 gallons Non-Hazmat - 14,000 lbs. GVWR*
- Trailer: Pothole Patch Unit - 12,000 lbs. GVWR*
- Trailer: Pressure/Vacuum Trailer - 6,000 gallons*
- Trailer: Pull Behind Dump Trailer - 14,000 lbs. GVWR
- Trailer: Refrigeration/Freezer Trailer - 7,000 lbs. GVWR
- Trailer: Restroom Trailer ADA Compliant*
- Trailer: Sludge Trailer - 80,000 lbs. GVWR*
- Trailer: Utility/Equipment Trailer - 7,000 lbs. GVWR
- Trailer: Waste Trailer with Walking Floor
- Transfer Switch: 600 Amp Automatic Transfer Switch
- Trencher: Tractor Type*
- Trencher: Walk Behind Trencher
- Underground Locating Equipment: Ground Penetrating Radar
- Underground Locating Equipment: Utility Locator
- Vehicle Barrier: Road Closure Barrier System*
- Vehicle Lift: Above Ground Drive On Platform Lift, Pantograph Type*

- Vehicle Lift: In Ground Drive On Platform Lift, Scissor Type*
- Vehicle Lift: Mobile - 2 Column, Cabled
- Vehicle Lift: Mobile - 2 Column, Wireless
- Vehicle Lift: Mobile - 4 Column, Cabled
- Vehicle Lift: Mobile - 4 Column, Wireless
- Vehicle Lift: Mobile - 6 Column, Cabled
- Vehicle Lift: Mobile - 6 Column, Wireless
- Vehicle Lift: Mobile - 8 Column, Cabled
- Vehicle Lift: Mobile - 8 Column, Wireless
- Vehicle Lift: Above Ground - 2 Post Asymmetric Stationary Vehicle Lift 10k
- Vehicle Lift: Above Ground - 2 Post Symmetric Stationary Vehicle Lift 12k
- Vehicle Lift: Above Ground - 2 Post Symmetric Stationary Vehicle Lift 15k
- Vehicle Lift: Above Ground - 2 Post Symmetric Stationary Vehicle Lift 18k
- Vehicle Lift: Above Ground - 2 Post Versymmetric Stationary Vehicle Lift 10k
- Vehicle Lift: Above Ground - 4 Column, Alignment Lift with Front/Rear Jacks and Integrated Turntables and Slip Plates 14k
- Vehicle Lift: Above Ground - 4 Post Alignment Lift with Turnplates and Rolling Jack 30k*
- Vehicle Lift: Above Ground - 4 Posts, Lift 14k*
- Vehicle Lift: Above Ground - 4 Posts, Lift 30k*

**New Item Group*

FSA26-EQU24.0: Equipment
Item Group Specifications

All Terrain & Utility Vehicles: All Terrain Vehicles (Quad)

The unit in this group must meet or exceed the following FSA Cooperative Purchasing Program specifications.

FSA Base Specifications

- Engine: Manufacturer's gas or diesel engine, 30 hp
- Transmission: Manufacturer's standard automatic transmission
- Chassis: 2- or 4-wheel drive
- Tires and Wheels: Front and rear all-terrain tires
- Weight: 580 lbs.

FSA26-EQU24.0: Equipment
Item Group Specifications

All Terrain & Utility Vehicles: Utility Vehicles (Side-by-Side)

The unit in this group must meet or exceed the following FSA Cooperative Purchasing Program specifications.

FSA Base Specification

- Engine: Manufacturer's gas or diesel engine, 20 hp
- Transmission: Manufacturer's standard automatic transmission
- Drivetrain: 2- or 4-wheel drive
- Tires and Wheels: Front and rear all terrain tires
- Weight: 900 lbs.
- ROPS: ROPS protection

FSA26-EQU24.0: Equipment
Item Group Specifications

All Terrain & Utility Vehicles: Electric Utility Vehicles (Side-by-Side)

The unit in this group must meet or exceed the following FSA Cooperative Purchasing Program specifications.

FSA Base Specification

- Dimensions (Approximate): Length- 113", height- 51", width- 56", wheelbase- 74", curb weight- 1,000 lbs., GVW- 2,900 lbs., 1,200 lbs. towing capacity
- Power: heavy duty batteries, 48-volt, charger included
- Transmission/Axle: Transaxle, 2-wheel drive
- Chassis/Steering/Suspension: frame type chassis, suspension matched for GVW of vehicle
- Tires And Wheels: Off/on road type tires, wheels rated for GVW of vehicle, tires to be traction type
- Performance: 40-mile range, 15 mph
- Brakes: Manual parking brake, disc or drum type, 2- or 4-wheel brakes
- Body: Rear mounted hitch for towing, pick-up type box with sides and tailgate, 2 passenger seating
- ROPS: ROPS protection

FSA26-EQU24.0: Equipment
Item Group Specifications

Blower: Ride On Blower

The unit in this group must meet or exceed the following FSA Cooperative Purchasing Program specifications.

FSA Base Specification

- Engine: 35 hp gas engine, positive feed oil system
- Drive Train/Axles: Zero turn type, spin on hydraulic filters
- Blower: 6,000 cfm output ,23” diameter, steel, balanced, steel blower housing, electric clutch
- Blower Discharge: 180 degrees of nozzle rotation, 16 degrees vertical tilt
- Wheels: Front wheels- 13x5-6 ribbed, flat free, Rear wheels- 24x 12-12 turf
- Comfort & Convenience: Stand up operator type

FSA26-EQU24.0: Equipment
Item Group Specifications

Boat: Aquatic Weed Cutter Workboat

The unit in this group must meet or exceed the following FSA Cooperative Purchasing Program specifications.

FSA Base Specification

- General Dimensions: Height- 8', width- 7'3", length- 15', height from waterline- 48", boat draft- 4" to 6", weight- 2,285 lbs.
- Engine: 3-cylinder diesel engine, liquid cooled electric start, and charging system
- Hydraulics: Triple pump design, 27 GPM, eco-friendly hydraulic fluid
- Propulsion: Twin hydraulic outdrives, weed and mud design propellers
- Vessel Hull: Fiberglass/Kevlar design, deck mounted cutter and loader
- Boom Cutter: Hydraulic drive, full articulation to cut 5' below waterline
- Front End Loader: Marine-type vegetation bucket
- Operator Station: All hydraulic function/propulsion function controls
- Trailer: Trailer to be designed specifically for this workboat. Must meet all federal, state, and local laws for a trailer operated on the highway.

FSA26-EQU24.0: Equipment
Item Group Specifications

Bulldozer: 70hp

The unit in this group must meet or exceed the following FSA Cooperative Purchasing Program specifications.

FSA Base Specification

- Weight: Operating weight- 15,800 lbs.
- Engine: 70 hp diesel
- Transmission: Hydrostatic, variable speed
- Undercarriage: 5 rollers each side, 16” grouser width
- Dozer Blade: Width- 96”, height- 32”, PAT type blade, hydraulically controlled
- Operator Station: Enclosed ROPS cab, A/C and heat, suspension seat, work lights

FSA26-EQU24.0: Equipment
Item Group Specifications

Bulldozer: 90hp

The unit in this group must meet or exceed the following FSA Cooperative Purchasing Program specifications.

FSA Base Specification

- Weight: Operating weight- 18,300 lbs.
- Engine: 90 hp diesel
- Transmission: Hydrostatic, variable speed
- Undercarriage: 6 rollers each side, 18” grouser width
- Dozer Blade: Width- 104”, height- 36”, PAT type blade, hydraulically controlled
- Operator Station: Enclosed ROPS cab, A/C and heat, suspension seat, work lights

FSA26-EQU24.0: Equipment
Item Group Specifications

Bulldozer: 180hp

The unit in this group must meet or exceed the following FSA Cooperative Purchasing Program specifications.

FSA Base Specification

- Weight: Operating weight- 45,000 lbs.
- Engine: 180 hp diesel engine
- Transmission: Power shift (3 forward, 1 reverse minimum) or hydrostatic drive (variable)
- Undercarriage: 7 rollers each side, 24" grouser width
- Dozer Blade: Width- 128", height- 48”, PAT type blade, hydraulically controlled
- Operator Station: Enclosed ROPS cab, A/C and heat, suspension seat, work lights

FSA26-EQU24.0: Equipment
Item Group Specifications

Chipper: Brush Chipper

The unit in this group must meet or exceed the following FSA Cooperative Purchasing Program specifications.

FSA Base Specification

- Weight: 6,800 lbs.
- Engine: 122 hp diesel engine
- Trailer: Surge or electric brakes, and trailer sized for GVW of machine, and DOT compliant
- Feed System: 15” chipping capacity, infeed throat opening- 20” x 15”, serrated infeed rollers, hydraulically driven, safety control bar around infeed opening for emergency stop
- Chipper Drum or Disc: Drum type- 22” diameter x 22” width, 2 knife pockets 180 degrees apart, dual edge reversible knives, extreme duty bearings, adjustable bedknife (reversible), disc type- 37” x 2” diameter disc, 4 knives reversible
- Chipper Housing: Easy access door for knife changes, drop down door for anvil adjustment or clean out
- Discharge Chute: Rotation of 270 degrees, adjustable chip deflector locking pin for chute rotation
- Miscellaneous: engine shutdown system, locking toolbox, vandalism protection

FSA26-EQU24.0: Equipment
Item Group Specifications

Compactor: 80,000 lbs. Landfill Compactor

The unit in this group must meet or exceed the following FSA Cooperative Purchasing Program specifications.

FSA Base Specification

- Weight: Operating weight- 80,000 lbs.
- Engine: Turbocharged diesel engine 400 hp
- Transmission: Mechanical or hydrostatic drive will be acceptable, 2 speeds forward and 2 speeds reverse
- Operating Station: Enclosed sound suppressed cab, air filtration system, air conditioned, heater and defroster, gauges and engine monitoring shutdown system, adjustable suspension seat, outside mirrors, work lights, windshield wipers and washer
- Wheels: Compaction wheels- 48” width minimum, wheel diameter- 58”, chevron chopper blades, or weld-on/pin-on teeth type wheels acceptable, anti-wire wrapping device and cleaner bar if applicable
- Blade: Straight or U-type trash blade acceptable, 14’ blade width, 6’ blade height, full width trash screen on top of blade, bolt on cutting edges
- Miscellaneous: Fully shielded engine compartment, removable belly pan, landfill shielding package

FSA26-EQU24.0: Equipment
Item Group Specifications

Compressor: Air Compressor - Trailer Mounted

The unit in this group must meet or exceed the following FSA Cooperative Purchasing Program specifications.

FSA Base Specification

- Weight: 1,950 lbs.
- Engine: 49 hp diesel engine, engine protection system
- Compressor: 185 cfm at 100 psi, rotary or reciprocating style compressor, 2 service valves
- Trailer: Sized for GVW of machine, DOT compliant
- Enclosure: Fixed weather enclosure over entire engine/compressor, 1 full size toolbox

FSA26-EQU24.0: Equipment
Item Group Specifications

Dump Truck: Articulating Off Road Dump Truck - 50,000 lbs. Payload

The unit in this group must meet or exceed the following FSA Cooperative Purchasing Program specifications.

FSA Base Specification

- Weight: Operating weight 40,000 lbs.
- Engine: Turbocharged diesel engine 265 hp
- Transmission: 6 speeds forward, 1 speed reverse, hydraulic retarder
- Brakes: Disc type service brakes, disc type parking brake
- Axles & Differentials: Differential locks, inter axle differential lock
- Tires: Radial off road hauler tires, sized for GVW of machine
- Steering: 45-degree left or right articulation angle, secondary electric steering system for emergency steering
- Operating Station: Enclosed cab to be pressurized, heated, air conditioned and filtered, built in ROPS/FOPS protection, suspension type operators seat with seat belt, cab instrumentation or engine monitoring system with audible alarms, tinted glass windows, sun visor, front and rear intermittent windshield wipers, work lights, headlights, stop, tail and turn signal lights, left and right mirrors
- Body: Dump body tipping angle 70 degrees, mud flaps, two single stage double acting body hoist cylinders, 18 yd. heaped capacity
- Miscellaneous: 95-gallon fuel tank, guard or shielding package

FSA26-EQU24.0: Equipment
Item Group Specifications

Excavator: All Terrain Walking Excavator

The unit in this group must meet or exceed the following FSA Cooperative Purchasing Program specifications.

FSA Base Specification

- Weight: 15,873 lbs. 2x4, 17,196 lbs. with 4x4 option
- Engine/Cab: 95 hp diesel engine, air conditioned and heated, enclosed ROPS cab equipped with manufacturer-provided emergency egress that remains functional regardless of boom position, gauges or warning indicators, mirrors, air suspension seat, full size cab, working lights
- Travel System: High-speed travel- 5 mph, grade-ability 70%, four tires
- Hydraulic System: Digging depth- 15’4”, auxiliary hydraulic circuit and controls plumbed to the end of stick with disconnect, stabilizers to be individually controlled in the vertical and horizontal positions
- Bucket: 4’ wide grading bucket, supplied with machine

FSA26-EQU24.0: Equipment
Item Group Specifications

Excavator: Hydraulic Excavator - 15,590 lbs. Operating Weight

The unit in this group must meet or exceed the following FSA Cooperative Purchasing Program specifications.

FSA Base Specification

- Weight: Operating weight- 15,590 lbs.
- Engine: 53 hp diesel engine
- Undercarriage: Overall track length 9’ 1”, overall track width 7’ 5” shoe width 17”
- Operating Station: ROPS enclosed cab to be air conditioned, heated and pressurized filtration system, opening front windshield, adjustable suspension type seat with safety belt, tinted safety glass, engine monitoring system with audible alarms, work lights
- Stick, Boom, Bucket: Boom and stick combination to allow minimum reach at ground level of 20’ 11”, bucket to be general purpose bucket, appropriately sized for machine and included

FSA26-EQU24.0: Equipment
Item Group Specifications

Excavator: Hydraulic Excavator - 38,000 lbs. Operating Weight

The unit in this group must meet or exceed the following FSA Cooperative Purchasing Program specifications.

FSA Base Specification

- Weight: Operating weight- 38,000 lbs.
- Engine: Turbocharged diesel engine 113 hp
- Undercarriage: Overall track length 12’ 10”, overall track width 6’ 6” shoe width 24”
- Operating Station: ROPS enclosed cab to be air conditioned, heated and pressurized filtration system, intermittent windshield wipers, opening front windshield, adjustable suspension type operator seat with safety belt, work lights
- Stick, Boom, Bucket: Boom and stick combination to allow minimum reach at ground level of 28’ 7”, bucket to be general purpose bucket, appropriately sized for machine and included

FSA26-EQU24.0: Equipment
Item Group Specifications

Excavator: Hydraulic Excavator - 76,550 lbs. Operating Weight

The unit in this group must meet or exceed the following FSA Cooperative Purchasing Program specifications.

FSA Base Specification

- Weight: Operating weight- 76,550 lbs.
- Engine: Turbocharged diesel engine 257 hp,
- Undercarriage: Overall track length 16’ 2”, overall track width 10’ 6”, shoe width 24”
- Operating Station: ROPS enclosed cab to be air conditioned, heated and pressurized filtration system, intermittent windshield wipers, opening front windshield, adjustable suspension type operator seat with safety belt, tinted safety glass, engine monitoring system with audible alarm, work lights
- Stick, Boom, Bucket: Boom and stick combination to allow minimum reach at ground level of 35’ 6”, bucket to be a general-purpose bucket, appropriately sized for machine and included

FSA26-EQU24.0: Equipment
Item Group Specifications

Excavator: Mini Hydraulic Excavator - 7,105 lbs. Operating Weight

The unit in this group must meet or exceed the following FSA Cooperative Purchasing Program specifications.

FSA Base Specification

- Weight: 7,105 lbs.
- Engine: Diesel engine, 23 hp
- Cab: ROPS open canopy, gauges or warning indicators for engine, work lights
- Tracks: 11” wide rubber belt tracks
- Stick, Boom, Bucket: Ground level reach of 15’ 8” minimum, auxiliary hydraulic circuit plumbed to the end of stick with disconnect, backfill blade, and general-purpose bucket sized appropriately for machine and included

FSA26-EQU24.0: Equipment
Item Group Specifications

Excavator: Telescopic Excavator - 45,000 lbs. Operating Weight - Tracked Type

The unit in this group must meet or exceed the following FSA Cooperative Purchasing Program specifications.

FSA Base Specification

- Weight: Operating weight 45,000 lbs.
- Engine: Turbocharged diesel, 170 hp
- Track Drive: 2-speed automatic with manual override, motors each track, planetary drives, travel speed high 3.4 mph, low 1.9 mph, automatic parking brake, individual track control
- Tracks: 23” pad size
- Operator Station: Enclosed cab, acoustical lined, adjustable seat, tinted safety glass, filtered fresh air, heater, air conditioned, and defroster, wipers and washers, skylight, work lights
- Safety Items: Electric horn, movement alarm, fire extinguisher, mirrors
- Hydraulic System: Hydraulic oil cooler, electronic hydraulic system monitor, automatic swing brake
- Boom: Telescopic boom, 180-degree boom rotation, 30’ reach at ground level
- Bucket: 60” ditching bucket provided with machine, quick attach type

FSA26-EQU24.0: Equipment
Item Group Specifications

Excavator: Telescopic Excavator - 47,000 lbs. Operating Weight - 6x6 Wheeled Type

The unit in this group must meet or exceed the following FSA Cooperative Purchasing Program specifications.

FSA Base Specification

- Weight: Operating weight 47,000 lbs.
- Carrier: Diesel engine, 250 hp, 6-speed automatic transmission, transfer case with front axle disconnect, one person carrier cab, air ride seat, heater, air conditioning, and defroster, windshield wipers, tinted glass, isolated and acoustic lined, gauges to monitor engine functions, frame sized for GVW and stress of mounted upper structure
- Safety: Electric horn, west coast mirrors with convex spot mirrors, tow hooks, fire extinguisher, backup alarm
- Front Axle: 16,000 lbs. front drive axle, leaf spring suspension, air brakes, automatic slack adjuster, integral power steering, hydraulic axle lockouts, 425/65R22.5 on/off road tires
- Rear Axle: Tandem axles 40,000 lbs., Hendrickson rear suspension, air brakes, automatic slack adjusters, 11R24.5 traction type tires
- Upper Structure: Hydraulic system- 80 hp drive motor, 44 hp swing motor, automatic swing park brake, hydraulic remote control- travel and steering controls in upper structure cab, automatic brakes and axle lockouts, movement alarm, upper structure cab- isolated and acoustic lined, tinted safety glass, adjustable operators seat, heater, air conditioning, and defroster, work lights, wipers and washers, mirrors on left and right, skylight upper structure control- electronic joysticks on adjustable pedestals, engine monitoring lights or gauge with audible warning or automatic shutdown low/high travel switch, electric horn, engine speed control.
- Boom, Stick, Bucket: Quick attach type, 60” ditching bucket provided with machine, telescopic type boom, 180-degree boom rotation, 30’ reach at ground level

FSA26-EQU24.0: Equipment
Item Group Specifications

Excavator: Vacuum Excavator - Trailer Mounted

The unit in this group must meet or exceed the following FSA Cooperative Purchasing Program specifications.

FSA Base Specification

- Weight: 14,000 lbs. GVWR
- Engine: 36 hp diesel engine, fully enclosed sound attenuated engine enclosure (including vacuum pump and high-pressure water pump)
- Vacuum Pump: 580 cfm at 15” of mercury, washable filtration cylinders, reverse pressure (to clear hose and offload liquids)
- High Pressure Water System: Minimum 2,000 psi at 4+ GPM water pump, low water automatic shutdown, two 100-gallon poly water tanks, 50’ high pressure water hose on hose reel, 5’ and 3’ wand and control handle
- Controls: Lockable and waterproof, curbside located, oil pressure, water temperature, fuel and vacuum gauge, electronic throttle
- Tank: Full open rear door, hydraulically opened, twin dump cylinders, 6” stainless steel portal shutoff, 800-gallon debris tank capacity
- Boom: 4” pickup hose, hydraulically powered in/out and up/down, boom cradle, 360-degree movement, 2 dielectric 3” suction wands, 33’ rubber suction hose
- Trailer: Sized for GVW of machine and DOT compliant

FSA26-EQU24.0: Equipment
Item Group Specifications

Excavator: Vacuum Excavator Body, Truck Mounted - 12 cubic yd.

The unit in this group must meet or exceed the following FSA Cooperative Purchasing Program specifications.

Note: Incomplete unit. This is a specification for a vacuum excavator unit to be mounted on an appropriately sized cab / chassis truck, provided by the purchaser. Agencies purchasing this unit will provide a cab / chassis truck of appropriate size, GVWR, and options necessary to have the selected vacuum unit mounted on. It is recommended the vendor of the vacuum unit and cab/chassis manufacturer be contacted to assist with determining performance and compatibility needs prior to purchase.

FSA Base Specification

- Air/Vacuum System: Positive displacement vacuum pump or centrifugal compressor, 3600 CFM @18 hg, muffler, vacuum relief valves, centrifugal separator with clean out
- Debris Tank: 12 cubic yd. capacity, 45-degree hydraulic dump, top hinged, hydraulic door locks, sight glass or indicator, drain valve with hose, check ball system or vacuum breaker
- Boom Assembly: 180-degree boom working area, hydraulic up/down, clean out port, transport cradle, 8” boom hose, boom control
- Water Pump: 2,200 psi, 10 gpm, pressure relief valve, wash down gun with relief valve, hose reel
- Water Tank: 1,000-gal capacity, curb side fill, level indicators
- Drive System: Hydrostatic, PTO, or transfer case type
- Miscellaneous: Work lights, warning lights

FSA26-EQU24.0: Equipment
Item Group Specifications

Excavator: Wheeled Hydraulic Excavator - 42,000 lbs. Operating Weight

The unit in this group must meet or exceed the following FSA Cooperative Purchasing Program specifications.

FSA Base Specification

- Weight: Operating weight- 42,000 lbs.
- Engine: Turbocharged diesel engine 140 hp
- Travel System: Travel speed of 21 mph
- Carrier: Traction type tires sized for GVW of machine
- Operating Station: Enclosed cab to be air conditioned, heated, and pressurized filtration system, intermittent windshield wipers, opening front windshield, vibration dampening cab mounts, adjustable suspension type operator seat with safety belt, tinted safety glass, engine monitoring system with audible alarms, work lights, stop/tail/turn and emergency flashers
- Stick, Boom, Bucket: Boom and stick combination to allow reach at ground level of 30', front blade, digging bucket to be a general-purpose bucket, appropriately sized for machine and included
- Outriggers: Rear outriggers

FSA26-EQU24.0: Equipment
Item Group Specifications

Forklift: Cushion Tire - 4,000 lbs. Lift Capacity

The unit in this group must meet or exceed the following FSA Cooperative Purchasing Program specifications.

FSA Base Specification

- Weight: 6,900 lbs.
- Lift Height: 130”
- Lift Capacity: 4,000 lbs.
- Engine: 50 hp, LP gas engine
- Transmission: Powershift type, inching pedal, 1 speed forward, 1 speed reverse
- Chassis: Wheelbase- 46", tread width- 33" (with standard tires), ground clearance at lowest point- 3"
- Tire size: Front- 18.0 x 7 x 12 cushion tire, rear- 14.0 x 5 x 10 cushion tire, steering radius- 72"
- Brakes: Hydraulic service brakes, mechanical parking brake
- Lift: Two stage lift mast, adjustable fork spacing, forward/backward tilt
- Operator Station: FOPS/ROPS protection, open canopy, work lights, seat belts, ANSI compliant

FSA26-EQU24.0: Equipment
Item Group Specifications

Forklift: Rough Terrain Forklift - 5,000 lbs. Lift Capacity

The unit in this group must meet or exceed the following FSA Cooperative Purchasing Program specifications.

FSA Base Specification

- Weight: 12,800 lbs.
- Lift Height: 14’
- Lift Capacity: 5,000 lbs.
- Engine: 70 hp diesel
- Transmission: FWD/rev shuttle shift, 4WD
- Chassis: Front track width 80”, turning radius 13’
- Tires: Front 16.9-24, rear 12-16.5 lug type tires
- Lift: 3 stage, side shift, adjustable fork spacing, FWD/backward tilt, load cushioning
- Operator Station: FOP/ROP protection, open canopy, work lights, seat belt, ANSI compliant

FSA26-EQU24.0: Equipment
Item Group Specifications

Forklift: Telescopic Tool Carrier/Telehandler

The unit in this group must meet or exceed the following FSA Cooperative Purchasing Program specifications.

FSA Base Specifications

- Weight: 17,155 lbs.
- Lift Height: 42’
- Lift Capacity: 7,700 lbs.
- Forward Reach: 26’
- Engine: 100 hp, diesel turbocharged
- Transmission: Hydrostatic drive, 2 travel speeds, low speed 3 mph, high speed 18 mph, AWD
- Chassis: 15.5 x 25 traction type tires, foam filled, 12’ turning radius, 3 steering modes- all wheel, crab, and front wheel
- Operator Station: ROPS/FOPS enclosed cab with air conditioning and heat, suspension seat, seat belt, work lights, safety lights, warning beacon, engine instrumentation or monitoring system

FSA26-EQU24.0: Equipment
Item Group Specifications

Generator: 60kW Stationary

The unit in this group must meet or exceed the following FSA Cooperative Purchasing Program specifications.

FSA Base Specification

- Generator Requirements: Standby rated 60 kW, 75 kVA, 0.8 power factor, 480V, 3-phase, 60 Hz, 1,800 RPM. Generator shall be directly coupled to the engine and meet IEC G3 performance requirements and UL 2200 certification.
- Engine: Water-cooled diesel engine sized for generator output and compliant with applicable emissions requirements.
- Controls: Microprocessor-based control system providing generator operating, monitoring, protection, and control functions.
- Enclosure/Silencer: Factory-assembled weather-protective, sound-attenuated enclosure including control panel, starting batteries, critical grade silencer, companion flanges, and flexible stainless-steel exhaust connection, sound attenuated enclosures noise level not to exceed 75 dBA measured at 23 ft.
- Fuel Tank: Integral double-wall sub-base fuel tank meeting UL 142 and applicable FDEP requirements with minimum 24-hour runtime at full rated load, 110% secondary containment, mechanical fuel gauge, lockable fuel fill, low fuel level alarm, and fuel tank rupture alarm.
- Battery Charger: Integral automatic battery charger with boost and float charging modes.
- Startup & Commissioning: Vendor shall coordinate startup and commissioning activities following installation by others. A factory-trained technician shall perform one (1) day of startup and operational testing and provide operator training.
- Warranty & Documentation: Generator shall include all standard manufacturer equipment and accessories. Initial fill of oil and coolant shall be included (fuel provided by others). One complete set of operation and maintenance manuals shall be provided. Warranty minimum two (2) years or 1,500 hours.

FSA26-EQU24.0: Equipment
Item Group Specifications

Generator: 125kW Stationary

The unit in this group must meet or exceed the following FSA Cooperative Purchasing Program specifications.

FSA Base Specification

- Generator Requirements: Standby rated 125 kW, 156.3 kVA, 0.8 power factor, 480V, 3-phase, 60 Hz, 1,800 RPM. Generator shall be directly coupled to the engine and meet IEC G3 performance requirements and UL 2200 certification.
- Engine: Water-cooled diesel engine sized for generator output and compliant with applicable emissions requirements.
- Controls: Microprocessor-based control system providing generator operating, monitoring, protection, and control functions.
- Enclosure/Silencer: Factory-assembled weather-protective, sound-attenuated enclosure including control panel, starting batteries, critical grade silencer, companion flanges, and flexible stainless-steel exhaust connection, sound attenuated enclosures noise level not to exceed 75 dBA measured at 23 ft.
- Fuel Tank: Integral double-wall sub-base fuel tank meeting UL 142 and applicable FDEP requirements with minimum 24-hour runtime at full rated load, 110% secondary containment, mechanical fuel gauge, lockable fuel fill, low fuel level alarm, and fuel tank rupture alarm.
- Battery Charger: Integral automatic battery charger with boost and float charging modes.
- Startup & Commissioning: Vendor shall coordinate startup and commissioning activities following installation by others. A factory-trained technician shall perform one (1) day of startup and operational testing and provide operator training.
- Warranty & Documentation: Generator shall include all standard manufacturer equipment and accessories. Initial fill of oil and coolant shall be included (fuel provided by others). One complete set of operation and maintenance manuals shall be provided. Warranty minimum two (2) years or 1,500 hours.

FSA26-EQU24.0: Equipment
Item Group Specifications

Generator: 150kW Mobile

The unit in this group must meet or exceed the following FSA Cooperative Purchasing Program specifications.

FSA Base Specification

- Generator Requirements: Standby rated 150 kWe, 187 kVA, 0.8 power factor; prime rated 135 kWe, 168 kVA, 0.8 power factor. Generator shall be directly coupled to the engine and equipped with a shunt-trip main breaker, jacket water heater, and IEC G3 compliance.
- Engine: Emission-compliant diesel engine sized for generator output.
- Controls: Microprocessor-based control system providing operating, monitoring, protection, and automatic start/stop functions.
- Distribution & Receptacles: Voltage selection for 120/240V single-phase, 120/240V three-phase, 120/208V three-phase, and 277/480V three-phase. Unit shall include load connection points, 50A twist-lock receptacle, 30A RV receptacle, duplex receptacles, GFCI receptacles, and remote start connections.
- Enclosure: Factory weather-protective sound-attenuated enclosure with lockable doors, critical-grade silencer, flexible exhaust connection, and service drain connections, sound attenuated enclosures noise not to exceed 75 dBA measured at 23 ft.
- Trailer/Fuel Tank: DOT-compliant trailer sized for generator package. Fuel system shall provide minimum eight (8) hour runtime at 75% load with fuel gauge, locking fuel fill, low fuel alarm, and required vents and connections.
- Battery Charger: Integral automatic battery charger with boost and float charging modes.
- Startup & Commissioning: Factory-trained technician shall perform one (1) day of startup, testing, and operator training.
- Warranty & Documentation: All equipment shall be new and current production. Operation and maintenance manuals included. Warranty minimum two (2) years or 1,500 hours.

FSA26-EQU24.0: Equipment
Item Group Specifications

Generator: 500kW Mobile

The unit in this group must meet or exceed the following FSA Cooperative Purchasing Program specifications.

FSA Base Specification

- Generator Requirements: Standby rated 500 kWe, 625 kVA, 0.8 power factor; prime rated 450 kWe, 563 kVA, 0.8 power factor. Generator shall be directly coupled to the engine and equipped with shunt-trip breaker, jacket water heater with isolation valves, and IEC G3 compliance.
- Engine: Water-cooled emission-compliant diesel engine sized for generator output.
- Controls: Microprocessor-based control system providing operating, monitoring, protection, and automatic start/stop functions.
- Distribution & Receptacles: Voltage selection for 120/208V and 277/480V three-phase operation. Load connection points rated for 2,000 amps with remote start provisions and dedicated charger/heater receptacles.
- Enclosure: Factory weather-protective sound-attenuated enclosure with lockable doors, critical-grade silencer or equivalent attenuation, flexible exhaust connection, and service drain connections, sound attenuated enclosures noise levels not to exceed 80 dBA measured at 23 ft.
- Trailer/Fuel Tank: DOT-compliant trailer with VIN, leveling jacks, hydraulic brakes, and adjustable/removable pintle hitch. Fuel system shall provide minimum eight (8) hour runtime at 75% load.
- Battery Charger: Integral automatic battery charger with boost and float charging modes.
- Startup & Commissioning: Factory-trained technician shall perform one (1) day of startup, testing, and operator training.
- Warranty & Documentation: All equipment shall be new and current production. Operation and maintenance manuals included. Warranty minimum two (2) years or 1,000 hours.

FSA26-EQU24.0: Equipment
Item Group Specifications

Generator: 500kW Stationary

The unit in this group must meet or exceed the following FSA Cooperative Purchasing Program specifications.

FSA Base Specification

- Generator Requirements: Standby rated 500 kW, 625 kVA, 0.8 power factor. Available in 120/240V, 120/208V, or 277/480V three-phase configurations. Generator shall meet IEC G3 performance requirements and UL 2200 certification.
- Engine: Water-cooled, 1,800 RPM diesel engine compliant with applicable stationary standby emissions requirements.
- Controls: Microprocessor-based control system providing generator operating, monitoring, protection, and control functions. Control panel shall comply with NFPA 110.
- Enclosure/Silencer: Factory-assembled weather-protective, sound-attenuated enclosure constructed of corrosion-resistant materials with critical-grade silencer, flexible exhaust connection, and service drain connections, sound attenuated enclosures noise level not to exceed 80 dBA measured at 23 ft.
- Fuel Tank: Integral double-wall sub-base fuel tank meeting UL 142 and applicable FDEP requirements with minimum 24-hour runtime at 75% load, 110% secondary containment, mechanical fuel gauge, lockable fuel fill, low fuel level alarm, and rupture alarm.
- Battery Charger: Integral automatic battery charger with boost and float charging modes.
- Startup & Commissioning: Vendor shall coordinate startup and commissioning activities following installation by others. A factory-trained technician shall perform one (1) day of startup and operational testing and provide operator training.
- Warranty & Documentation: Generator shall include all standard manufacturer equipment and accessories. Initial fill of oil and coolant shall be included. One complete set of operation and maintenance manuals shall be provided. Warranty minimum two (2) years or 1,500 hours.

FSA26-EQU24.0: Equipment
Item Group Specifications

Horizontal Directional Drill

The unit in this group must meet or exceed the following FSA Cooperative Purchasing Program specifications.

FSA Base Specification

- Weight: 20,700 lbs.
- Engine: 125 hp, liquid cooled diesel
- Operational: Thrust/pullback 28,000 lbs., carriage speed 240 fpm, spindle torque 4,200 lbs., rotational speed 270 rpm, bore diameter 4”, ground speed 3 mph, drill rack angle 14-21 degrees
- Controls: Touchscreen guidance display
- Drill System: Hydraulic vise, stakedown system, strike alert, remote lockout, work lights
- Drill Pipe: Rod diameter- 2.38”, length- 10’, weight- 73 lbs., bend radius- 108’
- Color: Manufacturers’ standard color
- Fluid System: Mixing type

FSA26-EQU24.0: Equipment
Item Group Specifications

Leaf Collector: Trailer Mounted

The unit in this group must meet or exceed the following FSA Cooperative Purchasing Program specifications.

FSA Base Specification

- Motor: 74 hp diesel engine, liquid cooled
- Fan: 27” fan, direct drive
- Pickup Hose: 16” diameter, 3 function hydraulically controlled arm, safety interlock
- Collection Body: 30 cubic yd. capacity w/ tailgate, scissor hoist, hydraulic dump
- Ride On Operator Station: All machine controls to be located at operator station, seat belt, emergency shutdown
- Dust Control: Dust control system, water pump, 3 nozzles, 90-gallon water tank
- Trailer: Frame, axles, tires, electric brakes will be sized for GVW of unit, DOT compliant, pintle hitch, yellow flashers, tongue jack
- Color: Manufacturers’ standard color

FSA26-EQU24.0: Equipment
Item Group Specifications

Lift: Articulated Boom Lift - Self Propelled Tracked

The unit in this group must meet or exceed the following FSA Cooperative Purchasing Program specifications.

FSA Base Specification

- Performance Standards: 55’ working height, 23’ horizontal reach, lift capacity 440 lbs.
- Boom: Telescoping upper boom, articulating jib, rotating basket, 360-degree boom rotation
- Outriggers: 4 corner hydraulic outriggers, w/ground pressure sensors
- Power: Gas or diesel engine, and 120v electric power for indoor operation
- Tracks: Rubber tracks
- Platform: Aluminum basket, hydraulic leveling system, w/load cell, controls

FSA26-EQU24.0: Equipment
Item Group Specifications

Lift: Scissor Lift - Self Propelled

The unit in this group must meet or exceed the following FSA Cooperative Purchasing Program specifications.

FSA Base Specification

- Performance Standards: 25’ working height (raised), 18’ platform height (raised), lift capacity 500 lbs.
- Power: 24-volt, 4–6-volt batteries, on board charging system, dual front wheel drive
- Brakes: 2- or 4-wheel brakes
- Platform: 64" x 29" platform, 36" extension deck fixed rails, AC power to platform, lanyard attachment points
- Safety: Manual platform lowering, emergency stop on platform and ground control, descent alarm, hour meter, horn, pothole guards, on board diagnostic system, tilt lever sensor with alarm, scissor maintenance prop

FSA26-EQU24.0: Equipment
Item Group Specifications

Light Tower: Hybrid Light Tower

The unit in this group must meet or exceed the following FSA Cooperative Purchasing Program specifications.

FSA Base Specification

- Performance Standards: deployed height- 30', weight- 1,850 lbs.
- Generator: Diesel engine, water cooled, emission compliant, 2 20A/120v receptacles, auto mode- automatic start for low battery hybrid systems automatically switches between solar battery, generator, or standard household current
- Trailer: 2 extendable outriggers, top mounted fork pockets and single lifting eye, powder coated DOT compliant trailer with lights
- Mast: 30' extendable mast in 3 stages, wind stability to 40 mph, rotates 90 degrees
- Lights: 4 quick connect 320 watt each, LED lights, dimmer control, instant on/off, 365-day programmable timer for lights, on/off, lens pattern spread of 150 degrees, meets DOT anti-glare regulations
- Solar Panels: 5 100-watt panels, operating temperature- 40°C to 46°C
- Batteries: 4 deep cycle batteries, optional lithium cells, 12-volt, 220 amp hours

FSA26-EQU24.0: Equipment
Item Group Specifications

Light Tower: Light Tower - Trailer Mounted

The unit in this group must meet or exceed the following FSA Cooperative Purchasing Program specifications.

FSA Base Specification

- Performance Standards: Mast deployed height- 23', weight- 1,610 lbs.
- Engine: Diesel engine, engine protection shutdown system
- Generator: Wattage output 7,000-watt max, 6,000-watt continuous, brushless type, 120/240v at 60 Hz, 6% regulated, amps at 120/240v 50/25, insulation class
- Fuel Tank: Sized for run time of 64 hrs.
- Trailer: 4 outrigger jacks, ball type hitch, DOT compliant
- Control Panel: Individual breakers for lights, hour meter, cabinet lights, external receptacles- One 30-amp 120/240-volt, twist lock, 1 GFC1, 15-amp 120 volt
- Mast: 30' extendable mast, 4 LED light heads, 320,000 lumens, 360-degree mast rotation, fold down for transport, winch for mast extension

FSA26-EQU24.0: Equipment
Item Group Specifications

Loader: Loader Backhoe - 4x4

The unit in this group must meet or exceed the following FSA Cooperative Purchasing Program specifications.

FSA Base Specification

- Weight: 15,221 lbs.
- Engine: 87 hp diesel engine
- Transmission: 4-speed power shift or power shuttle transmission
- Drivetrain: 4-wheel drive, with differential lock
- Operator Environment: ROPS enclosed cab, A/C and heat, work and driving lights, Stop and turn signals with flashing hazard lamps gauges or an electronic monitoring device standard horn and audible back-up alarm
- Brakes: enclosed and sealed, fully self-adjusting
- Tires: Lug type tires
- Loader (Single Tilt Cylinder): Loader shall be equipped with a return to dig mechanism, loader bucket 1.3 yd. with replaceable bolt on edge, furnished with machine
- Backhoe: Fixed length dipper stick reach approximately 17’ from swing center at ground level 24” general purpose bucket with replaceable teeth, furnished with machine

FSA26-EQU24.0: Equipment
Item Group Specifications

Loader: Mini Skid Steer - 1,000 lbs. Operating Capacity - Tracked Type, Stand Up Operator

The unit in this group must meet or exceed the following FSA Cooperative Purchasing Program specifications.

FSA Base Specification

- Engine: Minimum 24 hp diesel
- Transmission: Hydrostatic drive
- Operator Environment: Stand up type, engine monitoring system or gaugesBrakes: Hydrostatic main braking
- Tracks: Rubber tracks
- Loader: Front auxiliary hydraulics, 36” wide general purpose construction bucket (supplied with machine)
- Operating Capacity 1,000 lbs.

FSA26-EQU24.0: Equipment
Item Group Specifications

Loader: Skid Steer - 1,850 lbs. Operating Capacity - Wheeled Type

The unit in this group must meet or exceed the following FSA Cooperative Purchasing Program specifications.

FSA Base Specification

- Engine: 56 hp diesel
- Transmission: Hydrostatic drive
- Operator Environment: ROPS canopy shall be integral, front and rear work lights, hazard lights, engine monitoring system or gauges, with audible alarm, horn and backup alarm
- Brakes: Parking brake, hydrostatic main braking
- Tires: Lug type tires
- Loader: Front auxiliary hydraulics, foot or hand controls for bucket, 62” wide construction bucket, supplied with machine
- Operating Capacity: 1,850 lbs.

FSA26-EQU24.0: Equipment
Item Group Specifications

Loader: Skid Steer - 2,800 lbs. Operating Capacity - Wheeled Type

The unit in this group must meet or exceed the following FSA Cooperative Purchasing Program specifications.

FSA Base Specification

- Engine: 83 hp diesel
- Transmission: Hydrostatic drive
- Operator Environment: ROPS canopy shall be integral, front and rear work lights, hazard lights, engine monitoring system or gauges, with audible alarm, horn and backup alarm,
- Brakes: Parking brake, hydrostatic braking
- Tires: Lug type tires
- Loader: Front auxiliary hydraulics, foot or hand controls for bucket, 84” wide construction bucket supplied with machine
- Operating Capacity: 2,800 lbs.

FSA26-EQU24.0: Equipment
Item Group Specifications

Loader: Skid Steer - 3,100 lbs. Operating Capacity - Tracked Type

The unit in this group must meet or exceed the following FSA Cooperative Purchasing Program specifications.

FSA Base Specification

- Engine: 74 hp diesel,
- Transmission: Hydrostatic drive
- Operator Environment: ROPS canopy shall be integral, front and rear work lights, hazard lights, engine monitoring system or gauges, with audible alarm, horn and backup alarm
- Brakes: Parking brake, hydrostatic braking
- Tracks: Rubber tracks
- Bucket: 75” construction bucket, supplied with machine
- Operating Capacity: 3,100 lbs.

FSA26-EQU24.0: Equipment
Item Group Specifications

Loader: Wheel Loader - 1.5 cubic yd.

The unit in this group must meet or exceed the following FSA Cooperative Purchasing Program specifications.

FSA Base Specification

- Operating Weight: 14,100 lbs.
- Engine: minimum 74 hp, diesel engine
- Operator Station: Enclosed ROP cab with air conditioning and heat, suspension seat, work lights, driving lights, tinted glass, sound suppressed, mirrors
- Transmission: Power shift transmission or hydrostatic drive, minimum of 4 forward and 3 reverse speeds
- Drivetrain: AWD
- Tires: 15.5-25 radial, lug type tires
- Loader: 1.5 cubic yd. general purpose bucket with bolt on cutting edge supplied with machine, bucket position indicator, automatic return to dig

FSA26-EQU24.0: Equipment
Item Group Specifications

Loader: Wheel Loader - 3.0 cubic yd.

The unit in this group must meet or exceed the following FSA Cooperative Purchasing Program specifications.

FSA Base Specification

- Operating Weight: 27,200 lbs.
- Engine: Diesel engine, 140 hp
- Operators Station: ROPS enclosed cab with air conditioning and heat, suspension seat, work lights, driving lights, tinted glass, sound suppressed, mirrors
- Transmission: Power shift transmission or hydrostatic drive, minimum of 4 forward and 3 reverse speeds
- Drivetrain: AWD
- Tires: 20.5-25 radial tires, lug type
- Loader: 3.0 cubic yd. general purpose bucket with bolt on cutting edge furnished with machine, bucket position indicator, automatic return to dig

FSA26-EQU24.0: Equipment
Item Group Specifications

Loader: Wheel Loader - 5.75 cubic yd.

The unit in this group must meet or exceed the following FSA Cooperative Purchasing Program specifications.

FSA Base Specification

- Operating Weight: 53,674 lbs.
- Engine: Diesel engine, 280 hp
- Operators Station: ROPS enclosed cab with air conditioning and heat, suspension seat, work lights, driving lights, tinted glass, sound suppressed, mirrors
- Transmission: Power shift transmission or hydrostatic drive, 4 forward and 3 reverse speeds
- Drivetrain: AWD
- Tires: 26.5-R25 radial tires, lug type
- Loader: 5.75 cubic yd. general purpose bucket with bolt on cutting edge furnished with machine, bucket position indicator, automatic return to dig

FSA26-EQU24.0: Equipment
Item Group Specifications

Low Speed Vehicle: Electric Type

The unit in this group must meet or exceed the following FSA Cooperative Purchasing Program specifications.

FSA Base Specification

- Classification: These vehicles are primarily used to transport people and limited cargo in the State of Florida on typical county and city highways and roads that are posted for 35 mph or less and shall be designed to operate under typical environmental conditions, vehicles must conform to Federal Motor Vehicle Safety Standards, State of Florida Vehicle Safety Laws, regulations, specifications, standards, and requirements in effect as of the date of manufacture
- Engine: Electric motor, 48-volt lead acid batteries (8 batteries x 6v), 110v on board charger, 50 miles per charge, max forward speed 25mph, digital speedometer and dashboard
- Body: Plastic body and fiberglass roof, windshield with wiper
- Comfort Items: 4-person seating with flip rear seat for cargo
- Chassis/Steering/Suspension: steel frame type chassis, 500lbs. GVW capacity
- Tires and Wheels: 205/50-10 tires, 10" aluminum rims
- Brakes: 4 wheel hydraulic, hand brake
- Safety Items: 100% Electric with zero emissions, headlights, brake indicators, voltmeter, turn signals, side and rear-view mirrors, reverse alarm, non-slip flooring, neutral switch when vehicle is standing still, horn

FSA26-EQU24.0: Equipment
Item Group Specifications

Motor Grader: Large

The unit in this group must meet or exceed the following FSA Cooperative Purchasing Program specifications.

FSA Base Specification

- Weight: 33,900 lbs.
- Engine: Diesel 140 hp
- Transmission: Power shift with direct drive, 8 forward and 4 reverse speeds
- Brakes: Wet multiple disc
- Steering & Articulation: Front steer plus articulation, minimum articulation 20 degrees
- Blade: 12’ long, with bolt on cutting edge, scarifier with replaceable teeth
- Operator Environment: Low profile enclosed cab, sound suppressed, filtered, tinted glass, A/C and heat, adjustable suspension seat, gauges or engine monitoring system, work lights
- Tires: 13-24 10 PR, radial lug type tires

FSA26-EQU24.0: Equipment
Item Group Specifications

Motor Grader: Small

The unit in this group must meet or exceed the following FSA Cooperative Purchasing Program specifications.

FSA Base Specification

- Weight: 15,200 lbs.
- Engine: Diesel, 110 hp
- Transmission: Hydrostatic drive or power shift
- Brakes: Wet multiple disc
- Steering/Articulation: 18-degree articulation,
- Blade: 10’ blade, replaceable bolt on cutting edge, scarifier with replaceable teeth
- Operator Environment: Low profile enclosed cab, sound suppressed, filtered, tinted glass, A/C and heat, adjustable suspension seat, gauges or engine monitoring system, work lights
- Tires: 15x19.5, lug type tires

FSA26-EQU24.0: Equipment
Item Group Specifications

Mower: 15ft. Flex Wing Rotary Mower

The unit in this group must meet or exceed the following FSA Cooperative Purchasing Program specifications.

FSA Base Specification

- Deck: Mower shall be rotary, flex wing style, 10-gauge steel, replaceable full-length skid shoes
- Blade Carrier & Blades: 7-gauge steel, 1" thick cross bar weldment, "Stump Jumper" pan design, 2 free swinging updraft cutting blades, blade spindles shall be 1 ¼" diameter
- Wheels/Tires: 6 replaceable puncture resistant foam filled airplane tailwheels
- Power Distribution: Main driveline shall be CAT 5, slip clutch protection, a power divider shall have a rating of 190 hp, center and wing gearboxes shall have a rating of 190 hp
- General Features: Mower shall attach to the rear of the tractor using a self-level-lift hitch, front and rear chain deflectors, tongue shall have a jack stand

FSA26-EQU24.0: Equipment
Item Group Specifications

Mower: Remote Controlled Brush Mower

The unit in this group must meet or exceed the following FSA Cooperative Purchasing Program specifications.

FSA Base Specification

- Approximate Dimensions: Length- 57”, width- 59”, height- 33”, weight- 990 lbs.
- Engine: 24 hp gas, pressurized oiling system, electric start
- Track Drive System: Two 48v electric motors, infinitely variable gear reduction transmissions, multi lug type tracks, neoprene rollers
- Mower Deck: Twin spindle deck, 10-gauge mower deck, blade bar 2x22” with 4 free swinging blades, electric clutch assembly w/ integral safety brake, mowing height range- 2 to 7”
- Remote Control: Remote control to control mower functions- travel speed, cutting height, hours, radio signal strength, state of charge of remote-control battery, and mower on/off, remote control working range 328’, max range 984’, auto stop feature for loss of radio signal, rechargeable lithium ion batteries
- Safety: One touch emergency shut off switch

FSA26-EQU24.0: Equipment
Item Group Specifications

Mower: Electric Zero Turn Radius Mower

The unit in this group must meet or exceed the following FSA Cooperative Purchasing Program specifications.

FSA Base Specification

- Electric Power: 36 hp gas equivalent, electric power
- Battery: Battery system with charger to allow 7 hours of mowing time
- Deck: 60” deck, 1.5-5.5” height adjustment, side discharge
- Wheels: 24x12 drive wheels, solid deck wheels
- Operator Station: Suspension seat, ROPS bar
- Mowing Speed: 11 mph (approximate)

FSA26-EQU24.0: Equipment
Item Group Specifications

Mower: Zero Turn Radius Mower

The unit in this group must meet or exceed the following FSA Cooperative Purchasing Program specifications.

FSA Base Specification

- Engine: 25 hp gas engine, positive feed oil system
- Drive Train/Axles: Spin on hydraulic filters
- Deck: 60” heavy duty mower deck, manual deck lift, 1” to 5” cutting height, deck engagement electric clutch
- Wheels: Front wheels- 13x6-6, rear wheels- 24x11.5-12 turf
- Comfort & Convenience: High back full suspension seat, ROPS bar

FSA26-EQU24.0: Equipment
Item Group Specifications

Pallet Jack: Electric 4,500 lbs. Capacity

The unit in this group must meet or exceed the following FSA Cooperative Purchasing Program specifications.

FSA Base Specification

- Weight: 900 lbs.
- Wheelbase: 51”
- Turning Radius: 58”
- Lift Capacity: 4,500 lbs.
- Travel Speed: 3.7 mph
- Gradeability: 8% (loaded)
- Drive: 1.3 kW drive AC motor, polyurethane drive wheels, electric brake, lift motor 1.2 kW
- Battery System: 150 Ah battery, integrated on board charger
- Controls: Tiller type control, multi-function control on tiller handle

FSA26-EQU24.0: Equipment
Item Group Specifications

Pipe Inspection: Battery Operated Pipe Crawler Inspection System

The unit in this group must meet or exceed the following FSA Cooperative Purchasing Program specifications.

Note: Due to the complexity of this type of equipment, it is suggested that the purchaser contact the vendor to ensure the item ordered is a complete, ready-to-work unit and is compatible with the end user's software/hardware requirements and performance expectations.

FSA Base Specification

- Width: 6"
- Height: 5.5"
- Length: 28"
- Weight: 65 lbs.
- Depth Rating: 160'
- Pipe Range: 8" to 12"
- Speed: 12m/min
- Pull Force: 130 lbs.
- Sensors: Incline, roll, leak, pan/tilt, distance
- Tether Reel: Motorized reel, 1,000' tether capacity, 1,600 lbs. break strength
- Battery Power: 19.2 VDC, 5-hour battery life, capable of optional hybrid power
- Lighting: 900 LM
- Controller: Weatherproof, splashproof, joystick type controls, battery powered
- Camera: 360-degree pan, 1080p/2mp resolution, tilt 280 degrees, zoom 10x optical 120x digital, focus auto or manual, exposure auto or manual

FSA26-EQU24.0: Equipment
Item Group Specifications

Pipe Inspection: External Power Pipe Crawler Inspection System

The unit in this group must meet or exceed the following FSA Cooperative Purchasing Program specifications.

Note: Due to the complexity of this type of equipment, it is suggested that the purchaser contact the vendor to ensure the item ordered is a complete, ready-to-work unit and is compatible with the end user's software/hardware requirements and performance expectations. This unit will require an external power supply.

FSA Base Specification

- Width: 6" approximate
- Height: 5.5" approximate
- Length: 28" approximate
- Weight: 65 lbs. approximate
- Pipe Range: 6" to 48"
- Speed: manufacturers' standard speed
- Pull Force: 130 lbs. approximate
- Sensors: Incline, roll, leak, pan/tilt, distance
- Tether Reel: Motorized reel, level wind 1,000' tether capacity, 1,200 lbs. pull strength
- External Power: Power to unit from truck, or generator (not included)
- Lighting: 900 LM
- Controller: Weatherproof, splashproof, joystick type controls
- Camera: 360-degree camera rotation, 1080p x 1920p resolution, tilt, zoom 120x digital, focus auto or manual, exposure auto or manual, lens wiper (if available)

FSA26-EQU24.0: Equipment
Item Group Specifications

Portable Signal: Portable Signal - Trailer Mounted

The unit in this group must meet or exceed the following FSA Cooperative Purchasing Program specifications.

FSA Base Specification

- Performance Standards: Mast deployed height- 15', weight- 2700 lbs.
- Power: AGM Batteries, adjustable solar panel, on board 120v charger
- Mast: 17' hydraulically extendable mast, 9' manual arm extension
- RYG Light Heads: 2 each LED 12" light heads [red, yellow, green], 180-degree rotation, 3 section overhead, 3 section side of mast, ITE compliant
- Controls: Manufacturer's standard controls, any software needed for operation to be included
- Trailer: 4 outrigger jacks, ball type hitch, DOT compliant, vandalism protection (if available)

FSA26-EQU24.0: Equipment
Item Group Specifications

Pump: Mobile Pump

The unit in this group must meet or exceed the following FSA Cooperative Purchasing Program specifications.

FSA Base Specification

- Design Requirements: Discharge size- 6", suction size- 6", capable of 1,750 GPM, capable of 160' Total Dynamic Head (TDH), Duty Point, - 1,000 GPM at 120' Total Dynamic Head (TDH), solids handling capability size- 3"
- Engine: Diesel engine, appropriate to pump size at continuous duty, emission compliant engine, industrial grade exhaust muffler and rain cap, oil and coolant drain lines with ball valves, low water level shutdown switch, 12 VDC system with battery rack and cables, 50-gallon fuel tank with low fuel level alarm and shutdown
- Pump: Check valve, self-priming system
- Controls: Solid state, microprocessor-based pump controls, controls shall provide all operating, monitoring and control functions for the pump set, controller will also provide 2 fully programmable contacts for input and output signals accordingly, controller will provide remote start stop control with adjustable ramp (speed) time control, UL 508 R and CSA C22.2 No. 14 approved
- Trailer: The manufacturer shall mount the diesel engine and pump unit with the above 50 gallon subbase tank on a street legal DOT approved trailer, this trailer will be able to be rated for a safe travel at speeds of 60 mph and not be limited to the following specifications- trailer design shall be such that the county/city may easily remove the entire engine, fuel tank and pump from the trailer, 12 VDC electric system, lunette or military type towing ring with safety chains, single point lifting bar, license plate bracket, sand shoe type support stands front and rear, torque spring axles to meet load of trailer, the trailer must have a VIN and a certificate of origin
- Startup and Commissioning: Vendor must coordinate all startup and testing activities with the engineer/owner, after field delivery of the pump and trailer, an authorized factory representative shall perform the initial startup and field testing of the pump and trailer, if conditions permit, a site will be determined where connection will be made by the county/city to test the pump package, if a site cannot be prepared a standard

operational test will be performed, at the same time the startup test is performed, the factory representative will provide all necessary operation, field maintenance and minor repair training as necessary, this will also include safety procedures and hazard assessment

FSA26-EQU24.0: Equipment
Item Group Specifications

Roadway Advisory Board: Message Board/Automatic License Plate Reader

The unit in this group must meet or exceed the following FSA Cooperative Purchasing Program specifications.

Note: Due to the complexity of this type of equipment, purchaser should research and verify the unit bid will meet their desired performance expectations and is compatible with their hardware/software requirements. It is recommended the vendor be contacted to assist with determining these factors prior to purchase.

Unit bid will be ready to work with batteries, carrying cases, technical manuals, etc.

FSA Base Specification

- Power System: AGM type batteries, integral 120v charger, tilting solar panel
- Message Board: 96”x 55” message display board, touchscreen controller
- License Plate Reader: 2 LPR cameras, tablet processer, software, PC processor, Tech Alert
- Connectivity: Cellular connectivity
- Trailer: DOT approved trailer, all weather protection, maximum vandal protection

FSA26-EQU24.0: Equipment
Item Group Specifications

Roadway Advisory Board: Mobile Message Board

The unit in this group must meet or exceed the following FSA Cooperative Purchasing Program specifications.

FSA Base Specification

- Display Panel: Minimum panel size 71”x48”
- Power: Solar and battery with battery charger that meets manufacturer requirements
- Trailer: 2” minimum ball coupler, meets manufacturer and highway safety requirements, vandalism protected, DOT compliant

FSA26-EQU24.0: Equipment
Item Group Specifications

Roadway Advisory Board: Mobile Speed Board

The unit in this group must meet or exceed the following FSA Cooperative Purchasing Program specifications.

FSA Base Specification

- Display Panel: Amber or red LED, 12” speed limit sign
- Radar Speed Unit: Miles per hour, directional radar
- Data Collection: Data and analysis software included
- Power: Solar and battery with battery charger that meets manufacturer requirements
- Trailer: 2” ball coupler, meets manufacturer and highway safety requirements, vandal protected, DOT compliant trailer

FSA26-EQU24.0: Equipment
Item Group Specifications

Roadway Advisory Board: Mobile Speed Board/Automatic License Plate Reader

The unit in this group must meet or exceed the following FSA Cooperative Purchasing Program specifications.

Note: Due to the complexity of this type of equipment, purchasers should research and verify the unit bid will meet their desired performance expectations and is compatible with their hardware/software requirements. It is recommended that the vendor be contacted to assist with determining these factors prior to purchase.

Unit bid will be ready to work with batteries, carrying cases, technical manuals, etc.

FSA Base Specification

- Power System: 3 AGM type batteries, integral 120v charger, 5-to-7-day runtime, solar panel
- License Plate Reader: 2 cameras, tablet processer, software, automated hotlist alerting, plate search and vehicle filtering
- Digital Speed Display: 12” digital display, configurable, flashing excessive speed message capability
- Radar: Radar included
- Posted Speed Limit Sign: Metal sign included
- Connectivity: Cellular connectivity
- Trailer: DOT approved trailer, all weather protection, maximum vandal protection

FSA26-EQU24.0: Equipment
Item Group Specifications

Roadway Advisory Board: Mobile Traffic Advisory/Directional Signal Board

The unit in this group must meet or exceed the following FSA Cooperative Purchasing Program specifications.

FSA Base Specification

- Display: 15 lamps minimum, 48”x96” panel size
- Power: Solar and battery with battery charger that meets manufacturer requirements
- Trailer: 2” ball coupler, meets manufacturer and highway safety requirements, vandal protected, DOT compliant trailer

FSA26-EQU24.0: Equipment
Item Group Specifications

Roller: Compact 2,900 lbs. - Double Drum Roller - 38 in. Width

The unit in this group must meet or exceed the following FSA Cooperative Purchasing Program specifications.

FSA Base Specification

- Weight: 2,900 lbs.
- Engine: Diesel engine 20 hp, water cooled
- Travel System: Hydrostatic drive
- Steering: Front steering or center articulated acceptable
- Drum/Vibratory System: Front split drums 30” width total, 20” diameter , rear drum width 38”, 24” diameter, or same size front and rear drum width of 38” are acceptable, 3,000 lbs. vibratory compaction weight, scrapers/cleaners on all drums
- Travel System: Hydrostatic drive, and braking
- Water System: Shall be equipped with a pressurized water system for both drums, 38 gal plastic tank
- Operator station: Open type, w/ROPS, gauges or warning indicators, backup alarm, work lights, safety beacon

FSA26-EQU24.0: Equipment
Item Group Specifications

Roller: Compact, Pneumatic Asphalt Roller

The unit in this group must meet or exceed the following FSA Cooperative Purchasing Program specifications.

FSA Base Specification

- Weight: 1.5 to 3 tons fully ballasted
- Engine: Diesel engine 24 hp, water cooled
- Travel System: Hydrostatic drive
- Steering: Front steering, hydraulic
- Wheels: 7-wheel design, 3 front, 4 rear, 8.5x15 6 ply tire size, cleaners on all wheels
- Water System: Pressurized water system, 52-gal water tank
- Ballast Tank: 180 gal or wheel weights for ballast
- Operator station: Open type canopy ROPS, gauges or warning indicators, backup alarm, work lights, safety beacon

FSA26-EQU24.0: Equipment
Item Group Specifications

Roller: Compaction Roller 15,000 lbs. - Single Drum

The unit in this group must meet or exceed the following FSA Cooperative Purchasing Program specifications.

FSA Base Specification

- Weight: 15,000 lbs.
- Engine: Diesel engine, 74 hp
- Travel System: Hydrostatic drive
- Drum/Vibratory System: Compaction shall be 24,000 lbs., drum shall have a compaction width of 66", drum shall be smooth and not be less than 48" in diameter, vibratory system shall be hydraulically driven and have two amplitude settings, drum shall be equipped with an adjustable cleaning device, drum and vibratory pack shall be isolated
- Tires: 14.9x24
- Operator station: Open canopy type ROPS, mounted to the frame with rubber mounts to further isolate the operation and controls from machine vibration during operation, gauges or warning indicators, alert sounding device activated whenever a warning indicator is illuminated, backup alarm, work lights

FSA26-EQU24.0: Equipment
Item Group Specifications

Roller: Large 22,000 lbs. - Double Drum Roller - 70in. Width

The unit in this group must meet or exceed the following FSA Cooperative Purchasing Program specifications.

FSA Base Specification

- Weight: 22,000 lbs.
- Engine: Diesel engine, 100 hp
- Travel System: Hydrostatic drive
- Drum/Vibratory System: Drum compaction width on both drums no less than 70", drum shall be smooth and not less than 48" in diameter, vibratory system shall be hydraulically driven, drum shall be equipped with scrapers both front and rear of both drums, and have two (2) vibratory amplitude settings
- Steering: Center articulated
- Water System: Unit shall be equipped with pressurized water for both drums
- Operator Station: Open canopy type ROPS mounted to the frame with rubber mounts to further isolate the operation and controls from machine vibration during operation, gauges or warning indicators, alert sounding device activated whenever a warning indicator is illuminated, backup alarm, work lights

FSA26-EQU24.0: Equipment
Item Group Specifications

Roller: Small 5,400 lbs. - Double Drum Roller - 47in. Width

The unit in this group must meet or exceed the following FSA Cooperative Purchasing Program specifications.

FSA Base Specification

- Weight: 5,400 lbs.
- Engine: Diesel engine 25 hp
- Travel System: Hydrostatic drive
- Drum/Vibratory System: Drum compactor width on both drums no less than 47", drum shall be smooth and not less than 27.5" in diameter, vibratory system shall be hydraulically driven, drum shall be equipped with scrapers both front and rear of both drums, drum shall be hydraulically driven and have two amplitude settings
- Travel System: The machine shall be hydrostatically driven, steering shall be centered articulated, backup alarm
- Water System: shall be equipped with a pressurized water system for both drums,
- Operator Station: Open type canopy ROPS mounted to the frame with rubber mounts to further isolate the operation and controls from machine vibration during operation, gauges or warning indicators, alert sounding device activated whenever a warning indicator is illuminated, backup alarm, work lights

FSA26-EQU24.0: Equipment
Item Group Specifications

Security Camera: Security Camera Tower - Trailer Mounted

The unit in this group must meet or exceed the following FSA Cooperative Purchasing Program specifications.

FSA Base Specification

- Performance Standards: Mast deployed height- 20', weight- 1,225 lbs.
- Power: Battery power, w/solar panel, on board charger (if available)
- Camera: PTZ type, 360 degree, pan, tilt, zoom, or IR type (if available)
- Trailer: 4 outrigger jacks, ball type hitch, DOT compliant, vandalism protection
- Mast: 20' extendable mast, fold down type or telescoping for transport, winch for mast extension
- Software: Any required software for operation to be provided

FSA26-EQU24.0: Equipment
Item Group Specifications

Sewer Cleaner: Combination Sewer Cleaning/Vacuum Machine Body - 10 cubic yd.

The unit in this group must meet or exceed the following FSA Cooperative Purchasing Program specifications.

Note: Incomplete unit. This is a bid specification for a combination sewer cleaning/vacuum unit to be mounted on an appropriately sized cab & chassis truck. Agencies purchasing this unit will need to provide a cab & chassis truck of appropriate size, GVW, and options necessary to have the selected combination sewer cleaner/vacuuming unit mounted on or have the truck provider assist in ordering the correctly outfitted truck. All items factory installed unless otherwise noted.

FSA Base Specification

- Air/Vacuum System: Positive displacement vacuum pump or centrifugal compressor, 3,500 CFM @ 14.5" of mercury minimum, muffler, vacuum relief valves, centrifugal separator with clean out, PTO or hydrostatic drive
- Debris Tank: 10 cubic yd. capacity, 45-degree hydraulic dump, top hinged, hydraulic door locks, sight glass or indicator, drain valve with hose, check ball system or vacuum breaker
- Boom Assembly: 270-degree boom working area, hydraulic up/down, clean out port, transport cradle, 8" boom hose, pendant control
- Water Pump: 2,500 psi, 80 GPM, pressure relief valve, wash down gun with relief valve
- Water Tank: 1,000-gallon capacity, curb side fill, level indicators
- Hose Reel: 800' of 1" hose capacity, 400' of 1", 2,500 psi hose supplied, power in/out, reel speed control system, position lock system, engine and hose reel controls, level wind
- Drive System: Hydrostatic transfer case, split PTO, or auxiliary engine or transfer case

FSA26-EQU24.0: Equipment
Item Group Specifications

Sewer Cleaner: Easement Machine

The unit in this group must meet or exceed the following FSA Cooperative Purchasing Program specifications.

Note: This unit is not a self-contained machine. It is linked to a Sewer Cleaning truck, to enable working on a sewer system in small areas and easements not accessible by the sewer truck.

FSA Base Specification

- Engine: 20 hp gas or diesel engine, positive feed oil system
- Drive Train: Direct drive rubber track system, extendable tracks, spin on hydraulic filters
- Outriggers: 4 outriggers
- Hose Reel: 180-degree hose reel, 600’ of 1” hose (supplied), level wind, footage counter, variable hose reel speed control, power wind
- Lighting: Work lights

FSA26-EQU24.0: Equipment
Item Group Specifications

Sewer Cleaner: Trailer Mounted Sewer Cleaner

The unit in this group must meet or exceed the following FSA Cooperative Purchasing Program specifications.

FSA Base Specification

- Engine: 60 hp diesel engine
- High Pressure Water Pump: 4,000 psi at 18 GPM, pressure relief valve, triplex type pump, low water shutdown, multi-flow type system (pressure change without changes to engine rpm)
- Controls: Located next to hose reel, ignition, throttle, gauge package (tachometer, hour meter, oil pressure, volts, and low oil/high temp shutdown), water control valve
- Water Tank: 700-gallon capacity, high density polyethylene with baffles, sight gauge 2 ½" overhead tank fill, anti-siphon, air gap type, strainer, tank drain
- Hose Reel: 800' capacity of ½" high pressure sewer hose, hydraulic power in and out
- Hose Reel Drive Hydraulic System: Hydraulic pump 8 GPM, 15-gallon hydraulic reservoir, spin on type hydraulic filter
- Trailer: DOT compliant 12,000 lbs. GVW, tandem axle 2 5/16" hitch, tongue jack, 235/80 r 16" tires, fenders, breakaway switch, lighting as required by Federal and State laws, reflective striping, toolbox with locking system, engine enclosure, LED directional arrow stick, warning beacon (tank mounted)
- Equipment Furnished: 500' of ½" high pressure sewer hose, 100' of ¼" hose and nozzle for small pipe, washdown gun and 25' of hose with quick disconnects, tiger tail hose protector, nozzles to be furnished, 15-degree, 35-degree, chisel point, grenade flushing type, skid assembly, and rotator nozzle

FSA26-EQU24.0: Equipment
Item Group Specifications

Shop Tools & Equipment

Due to the complexity of this type of equipment, there are no base unit specifications. Purchaser should research and verify the model offered will meet their desired performance expectations. It is recommended the vendor be contacted to assist with determining needs, prior to purchase.

Units bid must be ready to work, with all necessary components and user manuals.

FSA26-EQU24.0: Equipment
Item Group Specifications

Simulator System: Equipment Operator Simulator

Due to the complexity of this type of equipment, there are no base unit specifications. Purchasers should research and verify the system bid will meet their desired training expectations. It is recommended the vendor be contacted to assist with determining these needs prior to purchase.

Unit bid must be ready to work, and include all hardware and software required, as well as any necessary training or instruction in the use of the system.

Due to the many different types of equipment training available, vendor will provide a minimum of one type (purchaser will designate type) initially in the software, with other types available to the purchaser.

Simulator must include authentic original machine controls and a supporting, companion curriculum that has been approved and industry recognized.

FSA26-EQU24.0: Equipment
Item Group Specifications

Shredder: Mobile Shredder/Grinder

Note: Due to the many different machine configurations and the types of materials they process, these specifications are written to describe a general size machine and function. Purchasers should contact the vendor to verify the desired equipment is configured and capable of processing their designated type of material stream.

The unit in this group must meet or exceed the following FSA Cooperative Purchasing Program specifications.

FSA Base Specification Range

- Weight Range: 52,000-68,000 lbs.
- Approximate Transport Dimensions: length- 31-38', width- 8', height- 10-13'
- Engine: Diesel, 550-750 hp
- Powertrain: Hydraulic drive or wet clutch acceptable with overload protection
- Rotor: Rotor or grinding drum acceptable, replaceable tips or rotors
- Controls: Gauge package, w/ engine protection shutdown, shredder/grinder control unit to protect from overloading or overheating
- Conveyor: Hydraulic driven conveyor, raised and lowered by hydraulics
- Trailer: Trailer to be constructed and sized for the GVW of the installed unit, and will meet all local, state, and federal laws for use on highway, (may require special permitting for transporting on road)

FSA26-EQU24.0: Equipment
Item Group Specifications

Solid Waste Material Handler: Wheeled Type

The unit in this group must meet or exceed the following FSA Cooperative Purchasing Program specifications.

FSA Base Specification

- Weight: Operating weight 48,000 lbs.
- Engine: Diesel engine, 132 hp
- Travel System: 2 speeds- 0-3.0 mph/0-12.0 mph
- Undercarriage: Two axles with all wheel drive
- Tires: 8- 10:00x20 solid tires
- Operating Station: Enclosed cab to have A/C and heat with pressurized filtration, hydraulic elevating cab, sliding door window and tilt out front window, tinted windows with safety glass, adjustable suspension seat with safety belt and seat heater, catwalk with handrail, fire extinguisher, rear view and right view camera system, halogen work lights on roof cap
- Working Equipment: Purpose built material handling boom and stick, safety check valves on boom and stick cylinders

FSA26-EQU24.0: Equipment
Item Group Specifications

Stump Cutter

The unit in this group must meet or exceed the following FSA Cooperative Purchasing Program specifications.

FSA Base Specification

- Weight: 1,320 lbs.
- Engine: 35 hp gasoline engine, positive feed oil system
- Ground Drive: Hydraulic ground drive, 2-speed travel, hydraulic brake system, hydraulic steering system, hydraulic system spin on filter, 4-gallon hydraulic reservoir
- Cutter Drive: Electric drive clutch, adjustable V belt drive
- Cutter Wheel: 17” diameter, 16 dual cutting-edge teeth, teeth pocket mounted, cutter wheel guard
- Controls: Hour meter, low-oil shutdown, boom swing left and right, boom up and down, travel forward and reverse, steering, operator presence shutdown
- Cutting Dimensions: Above ground- 24”, below ground- 15”

FSA26-EQU24.0: Equipment
Item Group Specifications

Sweeper: 3-Wheel Mechanical or Regenerative Air Sweeper

The unit in this group must meet or exceed the following FSA Cooperative Purchasing Program specifications.

FSA Base Specification

- Engine: Diesel engine, 74 hp
- Transmission: Hydrostatic drive type, capable of 20 mph
- Cab: Sealed type cab with filtered intake, tilt and telescoping steering column, tinted glass, sound suppressed, intermittent windshield wipers with washer, full gauge and warning lights for engine monitoring, climate controlled cab, heater, defroster and air conditioned, if cab is not center mounted, it must have dual controls for operating on either right or left hand side
- Safety Items: Dual west coast mirrors with spot mirrors, headlights, turn, brake and hazard lights, work lights for gutter brooms, cab mounted warning strobe light with protective cage, backup alarm, rearview backup camera
- Brakes/Steering: Hydraulic power assisted service bakes, parking brake, turning radius 15’ maximum
- Debris Hopper: 3.5 yd. capacity, 9’ 6” minimum dump height
- Conveyor: Rubber belt type with flights, hydraulic drive
- Main Broom: 32” diameter minimum, 56” width tube type, hydraulic drive
- Gutter Brooms: Right & left side brooms to have adjustable down pressure located in cab, 36” diameter minimum, segmented type broom, hydraulic drive
- Water Spray System: 220-gallon water tank, run dry type water pump, 15’ hydrant fill hose, water spray jets adjacent to all brooms, water filter
- Pick Up Head: The following requirements are for the regenerative air system type sweeper, all other requirements are the same for either machine, 72” outside dimension, 12” pressure hose, 12” suction hose, spring type suspension
- Blower: The following requirements are for the regenerative air system type sweeper, all other requirements are the same for either machine, direct hydraulic drive, cast aluminum with abrasion resistant coating, blower housing rubber lined

FSA26-EQU24.0: Equipment
Item Group Specifications

Sweeper: Mechanical Broom Street Sweeper

The unit in this group must meet or exceed the following FSA Cooperative Purchasing Program specifications.

FSA Base Specification

- Cab Chassis: Engine- 6-cylinder diesel, 200 hp, transmission- automatic transmission to meet the correct engine size and GVW of vehicle, hydrostatic drive is acceptable, engine equipment, cab- dual operating position type cab to include- steering, controls, etc. for sweeping from either side, rubber floor mats, air ride seating, pressurized with heat and air conditioning, instrumentation for truck- oil pressure, water temperatures, voltmeter gauges, instrumentation for sweeper-tachometer, hour meter, oil pressure, coolant temperature gauges, wheelbase 130" minimum, front steel bumper, safety- Dual West Coast bright finish heated mirrors with LH & RH remote, intermittent windshield wipers, daytime running lights, backup alarm, auto shutdown, axles- front axle- 11,900 lbs. GVW, rear axle- 21,000 lbs. GVW, single speed rear axle, 22.5 x 8.25 steel wheels- disc type, 11R x 22.5 14-ply radial tires, brakes- antilock brakes, air brakes, automatic slack adjusters- front and rear, air dryer- frame mounted
- Mounted Sweeper Body (Standard Equipment): Engine- 4 cylinder diesel, 47 hp, governed at 2,800 rpm, side brooms- right & left side gutter brooms (tilt control in cab), hydraulically raised & lowered , 42" diameter- segment type adjustable down pressure, main broom: length- 58", diameter- 35", hydraulic motor- direct or chain drive and reversible, full floating trailing arms w/shocks, lift control inside cab, sweeper body- overall height- 10', lift capacity- 11,000 lbs. minimum, 4.5 cubic yd. hopper, dump height- 10' minimum. lift design- hydraulic 2-stage scissors, hopper inspection door, work lights- 1 on each gutter broom and one in rear, hydraulic system- hydraulic pump capacity minimum- 24 GPM @ 2,600 rpm, pump- dual tandem gear, reservoir - 21 gallon, spin-on 10 micron hydraulic pump, externally mounted reservoir level indicator, water spray system- water tank construction- polyethylene and removable, water tank capacity- 280 gallon, fill hose 2 ½" x 16' with NST coupler, diaphragm pump type with run dry capability, pump capacity- 3.0 GPM, 9 spray nozzles- 2 min per gutter broom, 3 min for main broom, water filter- 80 micron mesh cleanable, conveyor/elevator system- minimum of 9 flights- replaceable, belt material- rubber reinforced fabric, belt speed-

variable with auxiliary engine rpm, drive- reversible with direct drive, elevator jam warning light & buzzer in cab, conveyer flush- built in

FSA26-EQU24.0: Equipment
Item Group Specifications

Sweeper: Compact Air Sweeper - 2.3 cubic yd.

The unit in this group must meet or exceed the following FSA Cooperative Purchasing Program specifications.

FSA Base Specification

- Weight: 5,900 lbs.
- Engine/Transmission: 78 hp, hydrostatic drive
- Brakes/Tires: Drum type brakes (power assist), front tire size 6.50 R10, Radial, rear tire size 225/75 R10 Radial
- Sweeper Dimensions: Height- 72”, width- 52”, length- 162”
- Hopper: 2.3 cubic yd. capacity
- Gutter Brooms: Equipped with left and right-side gutter brooms, front mounted 33.5” diameter, overall sweeping width 122”
- Water System: 66-gallon recirculation system capacity, 40-gallon clean water system capacity
- Lighting/Safety: Lighting package to enable vehicle to operate on the road, work lights for vehicle operation at night, amber warning beacon, intermittent wipers
- Comfort Items: ROPS type enclosed cab to be air conditioned and heated, suspension type operator seat
- Instrumentation: Full instrumentation to monitor operation of vehicle
- Fan Unit: Centrifugal type fan, wear resistant blades

FSA26-EQU24.0: Equipment
Item Group Specifications

Sweeper: Regenerative Air Street Sweeper

The unit in this group must meet or exceed the following FSA Cooperative Purchasing Program specifications.

FSA Base Specification

- Cab & Chassis: Engine- 6-cylinder diesel, 200 hp, transmission-, 5-speed automatic, engine equipment-, with rust preventative coating, dual operating position type cab to include- steering, controls, etc., for sweeping from either side, rubber floor mats, air ride suspension seats, both sides, pressurized cab with heat and air conditioning, instrumentation for truck- oil pressure, water temperature, voltmeter gauges, instrumentation for sweeper- tachometer, hour meter, oil pressure, coolant temperature gauges, wheelbase- 152” minimum, front steel bumper, safety- west coast mirrors with lower mounted convex mirrors, intermittent windshield wipers, daytime running lights, backup alarm, auto shutdown system for sweeper power plant, axles- front axle- 11,900 lbs. GVW, rear axle- 21,000 lbs. GVW, single- speed rear axle, 22.5 x 8.25 steel wheels, disc type, air brakes, air dryer
- Mounted Sweeper Body: Engine- 4-cylinder turbocharged diesel, 74 hp blower- direct belt drive, blower rating- 20,000 cfm, blower housing, pickup head- 90” OD, hose size- 14” pressure, 12” suction, hydraulically raised and lowered, side brooms- right and left side gutter brooms, hydraulically raised and lowered, 42” diameter- segment type, adjustable downward pressure, sweeper body- 7 yd. volume metric capacity, 50 degree dump angle or raker bar, centrifugal dust separator, hopper dump door to hydraulically open/close, lock and unlock, hopper screen- hinged, quick release, hydraulic system- direct drive hydraulic pump, water spray dust control system- water tank construction- polyethylene, 220 gallon capacity, fill hose- 16’ long, diaphragm pump type with run dry capability, pump capacity- 5 GPM pump pressure- 25 psi, 7 spray nozzles, 4” pickup head, 1” suction tube- 2 on each side of broom, filter- 80 mesh cleanable

FSA26-EQU24.0: Equipment
Item Group Specifications

Sweeper: Self-Propelled Hydrostatic Broom

The unit in this group must meet or exceed the following FSA Cooperative Purchasing Program specifications.

FSA Base Specification

- Weight: 5,500 lbs.
- Engine: Diesel engine 74 hp, air intake pre-cleaner, 27-gallon fuel tank
- Travel System: 2-speed hydrostatic drive, high speed travel, 20 mph, 225/75R15 tire size, joystick direction controls, or foot pedal, front or rear wheel steering
- Cab: ROPS, enclosed cab with air conditioner, heater, front windshield wiper, gauges or warning indicators for fuel level, engine oil, hydraulic oil and coolant, right and left side doors, right and left side mirrors, shall have safety lighting package and night operating lighting package
- Broom: 7’ 6” poly or poly-steel brush, brush shall have quick charge core system, variable brush down-pressure control, brush shall be hydraulically driven
- Water System: 150-gallon

FSA26-EQU24.0: Equipment
Item Group Specifications

Sweeper: Tow Behind Beach Sweeper

Note: This is a towed unit requiring a 60 hp, 4WD tractor, 3 pt hitch, 540 PTO rpm, w/ remote hydraulics, 30" rear wheels, minimum.

The unit in this group must meet or exceed the following FSA Cooperative Purchasing Program specifications.

FSA Base Specification

- Weight: 3,800 lbs.
- Frame: Galvanized frame
- Hydraulic System: PTO pump, flow control, spin on filter, overflow protected
- Conveyor: Bar flight type, 6' wide belt, chain drive
- Tines: Approximately 700 stainless steel tines
- Hopper: 3 yd, galvanized hopper, 4,500 lbs. capacity, 9' dump height
- Tires: Flotation type tires, sized for GVWR of machine
- Moldboard: Front of machine for leveling beach before cleaning
- Cleaning Dimensions: 7' cleaning width, 6" cleaning depth

FSA26-EQU24.0: Equipment
Item Group Specifications

Sweeper: Vacuum Street Sweeper

The unit in this group must meet or exceed the following FSA Cooperative Purchasing Program specifications.

FSA Base Specification

- Cab & Chassis: GVWR 33,000 lbs.
  - Wheelbase: As required by body manufacturer
  - Engine: Diesel, 200 hp
  - Transmission: Manufacturers automatic transmission
  - Brakes: Air brakes, air dryer, ABS system
  - Front Axle: 12,000 lbs. manufacturer standard suspension
  - Rear Axle: 22,000 lbs. rear manufacturer standard suspension
  - Wheels/Tires: 22.5 x 8.25 steel, radial tires
  - Cab: Conventional or Cabover type cab acceptable (verify type)
  - Dual Operating Position: Dual steering, and controls, if available)
  - Cab Convenience: A/C, and heat, Dual remote/heated mirrors w/convex, gauge package, power windows, power door locks, suspension seat both positions,
  - Miscellaneous: Steel front bumper, backup alarm
- Mounted Sweeper Body
- Fan Drive: Diesel, 110 hp (approximately) for twin engine design or hydraulic drive PTO system for single engine design
  - Vacuum Fan: Direct belt drive, or fluid drive, or hydraulically driven
  - Pickup head: Dual pickup heads size 29”, right and left side, hydraulically raised and lowered,
  - Brooms: Tilting, right and left side gutter brooms, center mount broom, all brooms hydraulically raised and lowered, adjustable downward pressure, easy change type
  - Sweep Width: 142” [approximately]
  - Sweeper body: 8.5 yd. capacity, 45-degree dump angle, dust separator system, hopper hydraulic dump
  - Water spray dust control system: Water tank construction polyethylene, 330-gal capacity [approximately], fill hose, water pump with run dry capability, water nozzles located on sweeper to minimize dust

- Sweeper controls: All sweeper controls, gauges, and warnings to be mounted in cab of truck
- Lighting: Work lights, warning lights

FSA26-EQU24.0: Equipment
Item Group Specifications

Sweeper: Walk Behind Floor Sweeper/Scrubber

The unit in this group must meet or exceed the following FSA Cooperative Purchasing Program specifications.

FSA Base Specification

- Power System: Electric 24v, on board charger
- Wet Sweep/Scrub: 26” cleaning path
- Brush Head: 26” disc or cylindrical brush system, brush head w/ squeegee, brush quick change type, single down-pressure, motor driven
- Vacuum System: 19-gal recovery tank, easy drain
- Solution System: 19-gal tank

FSA26-EQU24.0: Equipment
Item Group Specifications

Tactical Vehicle: Skid Steer Mounted (The Rook)

The unit in this group must meet or exceed the following FSA Cooperative Purchasing Program specifications.

FSA Base Specification

- Vehicle Platform: CAT multi-terrain loader, 111 hp diesel engine, 2-speed powertrain, operating weight 16,500 lbs., fuel tank 36-gallon, hydraulic quick coupler, enclosed ROPS cab with air conditioner and heater, dual level suspension undercarriage with self-level, advanced machine information and control system
- Cab Armored Protection: Bullet proof glass, NIJ Level IV armor cab reinforcement fabrication
- Armored Deployment Platform: integrated video system, breaching ram, vehicle extraction tool, grapple claw

FSA26-EQU24.0: Equipment
Item Group Specifications

Tool Carrier: Hydrostatic Drive

The unit in this group must meet or exceed the following FSA Cooperative Purchasing Program specifications.

Note: Incomplete equipment. Unit bid is for the prime mover only, without attachments. Purchasers should select attachments needed from the option list to complete the machine. This will affect the final price.

FSA Base Specification

- Weight: 9,000 lbs., without attachments
- Engine: 90 hp turbo diesel valve, canister style air cleaner with pre-cleaner
- Power Train: Hydrostatic, 4-wheel drive, 3 steering modes- 4-wheel, front wheel and 4-wheel crab
- Travel Speed: Work mode- variable 0-5 mph, travel mode- variable 0-20 mph
- Operators Station: air ride, suspension seat, enclosed ROPS cab with AC, heat, tilt steering column with horn, seat belt with safety switch, turn signals and brake lights, flashing safety lights, work lights
- Available Attachment Options: Available from options list, purchased separately, front lift arms with universal mounting plate, and quick connect hydraulics for 10 possible attachments- broom/sweeper, 90” rotary mower, 88” flail mower, dozier blade, stump grinder, pallet forks, cold planer, big roll sod installer, landscape rake, rotary tiller, right side rotary mower, right side flail mower, right side boom/reach mower, 15’ belly mower

FSA26-EQU24.0: Equipment
Item Group Specifications

Tractor: Agriculture Tractor - 4x2

The unit in this group must meet or exceed the following FSA Cooperative Purchasing Program specifications.

FSA Base Specification

- Engine: Diesel 75 PTO hp
- Transmission: Synchro shuttle type with a minimum of 8 forward and 3 reverse speeds
- Fuel Tank: 23-gallon capacity
- Brakes: Oil cooled hydraulic
- Power Take Off: Speeds rpm- 540/1,000
- Hydraulic System: Hydraulic system with standard remotes,
- 3-Point Hitch: Electronic or mechanical 3-point hitch control, Category II, telescopic stabilizers, SAE lift capacity @ 24” standard lbs.- 3,600, lower draft arm link ends- extendable
- Tires: Rear tires 18.4R-28 R1 radials, front tires 7.5L-15, 6-Ply F2 minimum
- Operator Station: ROPS canopy, with roof suspension seat, work lights, travel lights

FSA26-EQU24.0: Equipment
Item Group Specifications

Tractor: Compact Articulating Tractor - AWD

Note: Incomplete equipment. Unit bid is for the prime mover only, without attachments. Purchasers should select attachments needed from the option list to complete the machine. This will affect the final price.

The unit in this group must meet or exceed the following FSA Cooperative Purchasing Program specifications.

FSA Base Specification

- Weight: 1,860 lbs.
- Engine: 31 hp gas, or 25 hp diesel
- Transmission: Hydrostatic, AWD
- Performance Items: Weight transfer which transfers weight to front axle for added stability
- Safety Items: Automatic PTO shut off when weight is removed from seat, standard seatbelt, standard ROPS system, neutral assist
- Tires and Wheels: Manufacturer's standard tires and wheels (optional turf or bar tires)
- Attachment and Accessories: 30 commercial grade attachments for a variety of applications (sold individually, not factory installed see options list), uses quick hitch system for quick transition between attachments

FSA26-EQU24.0: Equipment
Item Group Specifications

Tractor: Small Agriculture Tractor - 4x4

The unit in this group must meet or exceed the following FSA Cooperative Purchasing Program specifications.

FSA Base Specification

- Engine: Diesel 29 PTO hp
- Transmission: Hydrostatic drive or mechanical type transmission,
- Fuel Tank: 7-gallon capacity
- Brakes: Oil cooled hydraulic wet disc
- Power Take Off: Speeds rpm- 540
- Hydraulic System: Hydraulic system with standard remotes,
- 3-Point Hitch: Category I, SAE lift capacity @ 24” standard lbs.- 1,435
- Tires: Not less than 11.2 x 24 rear, not less than 5-15 6-ply front
- Operator Station: ROPS canopy with roof, suspension seat, work lights, travel lights

FSA26-EQU24.0: Equipment
Item Group Specifications

Tractor: Tractor with Boom Mower - 4x4

The unit in this group must meet or exceed the following FSA Cooperative Purchasing Program specifications.

FSA Base Specification

- Engine: Diesel 95 PTO hp
- Transmission: Synchro shuttle type 16 forward and 16 reverse speeds, 4WD front axle
- Fuel Tank: 38-gallon capacity
- Brakes: Oil cooled hydraulic
- Power Take Off: Speeds rpm- 540/1000
- Hydraulic System: Closed center system with standard remotes, maximum pressure psi-2,900, standard output at remote 17 GPM, total of 29 GPM combined flow
- Point Hitch: Category II, telescopic stabilizers, SAE lift capacity @ 24" standard lbs.-5,000, lower draft arm link ends- extendable
- Tires: Front 13.6R24 R1, rear 18.4R30 6-Ply F2
- Mounted Boom Mower: 23' boom reach, forward and reverse swing break away, integral frame, separate hydraulic circuit for mower head, 5' rotary cutter head, disc or bar type blade holder
- Operator Station: Enclosed cab, ROPS/FOPS, suspension seat, lockable doors, A/C and heated, tinted glass, work lights, travel lights

FSA26-EQU24.0: Equipment
Item Group Specifications

Trailer: Container Chassis Trailer - 73,900 lbs. GVWR

Note: This is a chassis trailer only. It is designed for transporting a 40’ ISO container, not included.

The unit in this group must meet or exceed the following FSA Cooperative Purchasing Program specifications.

FSA Base Specification

- GVWR: 73,900 lbs.
- Length: 40’8”
- Width: 96”
- Weight: 6,500 lbs.
- Kingpin Setting: 30” from rear face of front bolster
- Coupler Height: 48”
- Container Locks: Front pin locks and rear twist locks, rear TOCA 908-123.00.90 or buffers equivalent
- Axles: 2 sized to meet GVWR of unit, oil lubricated hubs
- Brakes: Air brakes, w/ ABS, automatic slack adjusters
- Suspension: Spring type, sized for GVWR of unit
- Tires: 11R 22.5 Radial tires
- Lighting: LED DOT compliant stop/tail/turn, clearance, and mid turn
- Landing Gear: 2 speed, 55,000 lbs. capacity

FSA26-EQU24.0: Equipment
Item Group Specifications

Trailer: Deck Over Flatbed Trailer - 14,000 lbs. GVWR

The unit in this group must meet or exceed the following FSA Cooperative Purchasing Program specifications.

FSA Base Specification

- Dimensions: Deck width- 8’ 6”, overall deck length- 25’, dovetail length- 5’, GVWR- 14,000 lbs.
- Frame: 5” channel side rails, 3” channel cross members on 16” centers, channel undercarriage, 2” x 3/8” rub rail with stake pockets, pintle hitch or 2 5/16” ball coupler
- Deck: 2 x 8 pressure treated deck, Galvanized deck screws, 5’ dovetail, spring assist stand up ramps
- Axles: Tandem 7,000 lbs., electric brakes, breakaway brake system with wet cell battery
- Lighting System: Protected turn/stop/taillights, wiring run in conduit, heavy duty trailer plug
- Miscellaneous: Spare tire and rack, lockable toolbox, primed and painted- choice of color, tongue jack rated for GVWR of trailer

FSA26-EQU24.0: Equipment
Item Group Specifications

Trailer: Deck Over Equipment - 40,000 lbs. GVWR

The unit in this group must meet or exceed the following FSA Cooperative Purchasing Program specifications.

FSA Base Specification

- Deck: 24’ overall, 19’ w/ 60” dovetail, 96” width, 40,000 lbs. GVWR
- Decking: 2” hardwood
- Ramps: 60” fold up ramps, 22” width, spring assisted
- Tiedowns: Heavy duty tiedowns
- Axles: (2) 22,500 lbs. axles, oil lubricated
- Brakes: Air brakes, w/ ABS
- Suspension: Multi-leaf, sized for GVW of unit
- Tires: (8) 215/75R x 17.5 16 ply Radial
- Lighting: LED, DOT compliant stop, tail, turn and clearance
- Coupler: Adjustable pintle eye
- Jack: 2-speed jack, sized for trailer

FSA26-EQU24.0: Equipment
Item Group Specifications

Trailer: Detachable Neck Lowboy Trailer 100,000 lbs. GVWR

The unit in this group must meet or exceed the following FSA Cooperative Purchasing Program specifications.

FSA Base Specification

- Deck: 50’ overall, 24’ clear deck length, 14’ rear over axles, 8’6” deck width, swing out outriggers, 100,000 lbs. GVWR
- Decking: 1 ½” hardwood decking
- Ramps: Front folding ramps
- Tiedowns: 5 pair heavy duty tiedowns
- Flag holders: 2 pairs
- Axles: 3, sized to meet GVWR of unit, oil lubricated
- Brakes: Air brakes, w/ ABS, automatic slack adjusters
- Suspension: Air ride type, sized for GVWR of unit
- Tires: 235/70R 22.5 Radial tires
- Lighting: LED DOT compliant stop/tail/turn, clearance, and mid turn
- Detachable Gooseneck: 48” kingpin height, fixed neck, 96” swing radius, hydraulic lift, hydraulic support, toolbox on neck

FSA26-EQU24.0: Equipment
Item Group Specifications

Trailer: Enclosed Cargo Trailer - 7,000 lbs. GVWR

The unit in this group must meet or exceed the following FSA Cooperative Purchasing Program specifications.

FSA Base Specification

- Dimensions: Width- 7', length- 16', 7,000 lbs. GVWR
- Frame: Formed angle top and bottom sills, all exposed steel primed and painted, positive lock ball coupler, tongue jack, safety chains- DOT rated
- Floor/Walls/Roof: ¾" exterior grade plywood floor, ¼" plywood interior liner, .030" prefinished aluminum exterior, state colors, smooth galvanized steel or one-piece aluminum roof, extruded aluminum bottom trim, extruded aluminum roof cove with drip rail, double locking door on rear
- Axles: Axles and suspension rated for GVWR of trailer, 15" wheels, 205 x 15 trailer rated tires, electric brakes with breakaway switch
- Lighting System: Protected turn/stop/taillights, clearance lights, wiring run in conduit, heavy duty trailer plug
- Miscellaneous: Spare wheel and tire

FSA26-EQU24.0: Equipment
Item Group Specifications

Trailer: Flatbed Tilt Trailer - 40,000 lbs. GVWR

The unit in this group must meet or exceed the following FSA Cooperative Purchasing Program specifications.

FSA Base Specification

- Deck: 24’ knife edge tilt deck, 4’ stationary, 102” width, 40,000 lbs. GVWR
- Decking: Hardwood
- Tilt Cylinders: Dual cushioning hydraulic tilt cylinders
- Latch: Tilt deck locking system w/ safety pin
- Tiedowns: Heavy duty tiedowns
- Axles: (2) 20,000 lbs. axles, oil lubricated
- Brakes: Brakes, w/ ABS
- Suspension: Multi-leaf, sized for GVWR of unit
- Tires: (8) 235/75R x 17.5 16 ply radial
- Lighting: LED rubber mounted, DOT compliant stop, tail, turn and clearance
- Coupler: Adjustable pintle eye, rated for GVWR of trailer
- Toolbox: Located in tongue, lockable
- Jack: 2-speed jack, sized for GVWR of trailer

FSA26-EQU24.0: Equipment
Item Group Specifications

Trailer: Fixed Neck Lowboy Trailer - 70,000 lbs. GVWR

The unit in this group must meet or exceed the following FSA Cooperative Purchasing Program specifications.

FSA Base Specification

- Deck: 43’ overall, 27’ clear deck length, 4’ dovetail, 70,000 lbs. GVWR
- Decking: 1 ½” hardwood decking
- Ramps: 8’ x 3’, fold up ramps, hydraulically raised
- Tiedowns: 8 pair heavy duty tiedowns
- Flag holders: 2 pairs
- Axles: 2 sized to meet GVWR of unit, oil lubricated hubs
- Brakes: Air brakes, w/ ABS, automatic slack adjusters
- Suspension: Spring type, sized for GVWR of unit
- Tires: 235/75R 17.5 Radial tires
- Lighting: LED DOT compliant stop/tail/turn, clearance, and mid turn
- Gooseneck: 48” kingpin height, fixed neck, 84” swing radius, toolbox on neck
- Landing Gear: 2 speed, 50,000 lbs. capacity

FSA26-EQU24.0: Equipment
Item Group Specifications

Trailer: Hydraulic Drop Deck Trailer - 13,500 lbs. GVWR

The unit in this group must meet or exceed the following FSA Cooperative Purchasing Program specifications.

FSA Base Specification

- GVWR: 13,500 lbs.
- Deck: 75” x 14’, ground flat loading
- Lift Mechanism: Hydraulic
- Suspension: Rubber or air
- Deck: Steel treadplate
- Brakes: Electric on all axles
- Tires: 235/80R16 LRE Radial
- Lighting: All LED DOT compliant, stop/tail/turn, clearance
- Coupler: A-frame adjustable
- Tie Downs: Heavy duty D-Ring

FSA26-EQU24.0: Equipment
Item Group Specifications

Trailer: Hydraulic Tail Trailer - 70,000 lbs. GVWR

The unit in this group must meet or exceed the following FSA Cooperative Purchasing Program specifications.

FSA Base Specification

- Dimensions: Deck width- 8’ 6”, overall length- 48’, deck length- 25’, hydraulic tail- 12’ (8’ with 4’ fold under), 70,000 lbs. GVWR
- Frame: Cambered “I” beam main frame, 49” kingpin height, 16” kingpin setting, 82” swing clearance, 8’ upper deck length
- Deck: 1 ½” decking, 1 ½”, floor plate over wheels, traction plate on hydraulic tail
- Hydraulic Tail: 8’ main tail, 4’ fold under tail, hydraulic actuated with tail lock, 14-degree load angle
- Landing Gear: Pin drop type or 2 speed type
- Axles/Suspension/Tires: 2- 22,500 lbs. axles, oil seal hubs, 6.5 x 17.5 steel wheels, 235/75R x 17.5 radial tires, air brakes with automatic slack adjustors, ABS brake system, air ride suspension with auto and manual controls
- Lighting: LED lighting, wiring in conduit, mid turn signals, lighting as per DOT regulations
- Miscellaneous Equipment: 12,000 lbs. hydraulic winch mounted on upper deck over kingpin, wireless control, toolbox on upper deck, hydraulic tail controls both sides, air ride controls with dump valve

FSA26-EQU24.0: Equipment
Item Group Specifications

Trailer: Leachate Tanker - 6,500 gallons

The unit in this group must meet or exceed the following FSA Cooperative Purchasing Program specifications.

FSA Base Specification

- Approximate Dimensions: Length: 42', fifth wheel height- 49", capacity- 6,500 gallon,
- Tank Construction: Stainless steel, external ring, one compartment, 6,500 gallon, straight round w/ slope to rear, two baffles, three manways (lug) one located center and one in each baffled section, two manway cleanouts (4 lug) located in front head and rear head at bottom
- Top Walkway: Grip strut 12" width, extending from rear to front manway, with handrail, and ladder to access walkway
- Discharges, Valves, and Plumbing: Pressure/vacuum relief valve 15 psi in manhole cover, 6" discharge with sliding gate valve at rear of tank to allow gravity discharge, cam lock fitting type
- Hose Carriers: Located on fenders
- Cabinets: Two cabinets mounted curbside and roadside ahead of suspension
- Trailer Construction: Stainless steel frame
- Axles: Two axles sized for GVWR of unit, oil lubricated hubs
- Brakes: Air brakes w/ ABS and rollover protection, aluminum air tanks, automatic slack adjusters
- Tires: Radial tires sized for GVWR of unit
- Landing Gear: Sized for GVWR of unit
- Lights: LED clearance, stop/turn/tail, all wiring run in protective conduit, work light, w/ switch at rear, all wiring run to junction box at front of trailer
- Color: Stainless Steel

FSA26-EQU24.0: Equipment
Item Group Specifications

Trailer: Livestock Trailer - 7,000 lbs. GVWR

The unit in this group must meet or exceed the following FSA Cooperative Purchasing Program specifications.

FSA Base Specification

- GVWR: 7,000 lbs.
- Stall Size: 76” x 16’
- Interior Height: 6’ 6”
- Doors: Side escape door and full swing rear, center cut gate
- Deck: Treated pine
- Axles: (2) 3,500 lbs., quick lubricating
- Brakes: Electric on all axles
- Suspension: Multi-leaf
- Tires: 205/75R15 Radial
- Lighting: All LED DOT compliant, stop/tail/turn, clearance
- Coupler: A-frame ball style
- Jack: 2,000 lbs. heavy duty

FSA26-EQU24.0: Equipment
Item Group Specifications

Trailer: Mobile Fuel Trailer - 460 gallons

The unit in this group must meet or exceed the following FSA Cooperative Purchasing Program specifications.

Note: This is for Diesel Fuel Only.

FSA Base Specification

- Fuel Tank: 460-gallon capacity, pressure tested, internal baffles, fuel gauge, drain, 2 fill ports, vented cap, lockable cap
- Fuel Pump System: Electric fuel pump, spin on filter, fill hose w/ rack, fill nozzle, on board battery, protected wiring to fuel pump
- Frame: 5” channel frame
- Axles: Tandem axles rated for GVWR of trailer, electric brakes, breakaway brake system with well cell battery
- Wheels and Tires: Steel wheels, and radial tires rated for GVWR of trailer
- Lighting System: DOT compliant marking and LED turn/stop/taillights, wiring run in conduit, heavy duty trailer plug
- Hitch: Ball type or pintle hitch (customer will designate)
- Miscellaneous: Lockable toolbox, tongue jack rated for GVWR of trailer, fenders

FSA26-EQU24.0: Equipment
Item Group Specifications

Trailer: Multi Tank Fuel/Service 880 gallons Non-Hazmat - 14,000 lbs. GVWR

The unit in this group must meet or exceed the following FSA Cooperative Purchasing Program specifications.

Note: This is for Diesel Fuel Only.

FSA Base Specification

- GVWR: 14,000 lbs.
- Frame: Sized for GVWR of trailer mounted multi tanks, and equipment
- Axles: Tandem 7,000 lbs., axles, electric brakes, breakaway brake system
- Tires: ST 235/80R16, steel wheels
- Lighting System: DOT compliant lighting and marking, protected wiring run in conduit
- Multi Tank Unit: 8 Tanks, 110 gal each tank, 880-gal total storage, lockable fill caps, sight fuel level gauge
- Pump System: 12volt 25 GPM pump, pump manifold, 35’ x 1” retracting hose reel, auto trip nozzle, filter, battery, power cables, pump system enclosed w /locks
- Miscellaneous: Tongue jack rated for GVWR of trailer, adjustable hitch, fire extinguisher

FSA26-EQU24.0: Equipment
Item Group Specifications

Trailer: Pothole Patch Unit - 12,000 lbs. GVWR

The unit in this group must meet or exceed the following FSA Cooperative Purchasing Program specifications.

FSA Base Specification

- Dimensions: Length- 200”, width- 90”, height-75” (approximate)
- Weight: 3,300 lbs., (empty)
- Capacity: 2.0 cubic yds., 3 ton
- Trailer Frame: Frame constructed for GVWR of unit, adjustable pintle hitch
- Axles: Tandem axles sized for GVWR of unit, electric brakes, breakaway brake system
- Tires: Rated for GVWR of unit, steel wheels
- Lighting System: DOT compliant lighting and marking
- Power: Battery powered, w/ on board charger
- Asphalt Hopper: 2.0 cubic yds. capacity, hydraulic dump (scissor hoist type), hydraulic top door lift, auger discharge w/folding platform, or gravity discharge
- Heating System: Oil jacketed, or double wall insulated, diesel burner type, w/ temperature control
- Miscellaneous: Toolbox, tongue jack rated for GVWR of trailer

FSA26-EQU24.0: Equipment
Item Group Specifications

Trailer: Pressure/Vacuum Trailer - 6,000 gallons

The unit in this group must meet or exceed the following FSA Cooperative Purchasing Program specifications.

FSA Base Specification

- Approximate Dimensions: Length: 42', fifth wheel height- 49", capacity- 6,000-gal, operating pressure- 22 "hg w/ vacuum relief, 22 PSI pressure
- Tank Construction: Stainless steel, external ring, one compartment, 6,000 gal, straight round w/ slope to rear, baffles, three manways (lug) one located center and one in each baffled section, manway cleanouts located in rear head at bottom
- Top Walkway: Grip strut 12" width, extending from rear to front manway, with handrail, and ladder to access walkway
- Discharges, Valves, and Plumbing: Manufacturers standard plumbing, camlock fittings, drains, suitable for a vacuum / pressure trailer loading system
- Pump: Hydraulically driven, bi-directional pump, muffler w/ oil reservoir, directional flow control valve, stainless piping for pump hydraulics from pump to front curbside for truck attachment
- Hose Carriers: Located on fenders
- Cabinets: Tool cabinet mounted roadside ahead of suspension
- Trailer Construction: Stainless steel frame
- Suspension: Manufacturers standard suspension to meet GVWR of trailer
- Axles: Two axles sized for GVWR of unit, oil lubricated hubs
- Brakes: Air brakes w/ ABS and rollover protection, aluminum air tanks, automatic slack adjusters
- Tires: Radial tires sized for GVWR of unit, aluminum wheels w/ mudflaps
- Landing Gear: Sized for GVWR of unit
- Lights: LED clearance, stop/turn/tail, all wiring run in protective conduit, work light, w/ switch in cabinet, all wiring run to junction box at front of trailer
- Color: Stainless Steel

FSA26-EQU24.0: Equipment
Item Group Specifications

Trailer: Pull Behind Dump Trailer - 14,000 lbs. GVWR

The unit in this group must meet or exceed the following FSA Cooperative Purchasing Program specifications.

FSA Base Specification

- GVWR: 14,000 lbs.
- Bed: Grease fittings on all hinges, D-ring tie downs
- Bed Size & Frame: Width- 6’ 8”, length- 14’, deck height- 24”, tube steel box, 10GA bed floor, rear stabilizers, 12,000 lbs. tongue jack, 20” high sides and tailgate minimum
- Bed Lift: Scissor type hydraulic lift or telescoping cylinder, 12-volt power unit with battery, 15’ pendant control
- Axles: Tandem 7,000 lbs., sized for GVWR of trailer, 4-wheel electric brakes with breakaway
- Miscellaneous: Conspicuity tape on sides, tail/stop/turn lights, 7-way trailer plug, tarp system, spare tire, pintle type hitch or ball (customer selected)

FSA26-EQU24.0: Equipment
Item Group Specifications

Trailer: Refrigeration/Freezer Trailer - 7,000 lbs. GVWR

The unit in this group must meet or exceed the following FSA Cooperative Purchasing Program specifications.

FSA Base Specification

- GVWR: 7,000 lbs.
- Cooler Box Size: 72” x 12’
- Interior Height: 6’ 5”
- Temperature Range: 0°F to 50°F
- Input Voltage: 120V 15A
- Insulation: R-25
- Food Safety: Anti-microbial gel or stainless interior coating
- Doors: 48” rear door with freezer strips
- Floor: ¾” keg duty floor
- Axles: (2) 3,500 lbs., quick lubricating
- Brakes: electric on all axles
- Tires: 205/75R15 Radial tires
- Lighting: All LED DOT compliant, stop/tail/turn, clearance
- Jack: 2,000 lbs. heavy duty
- Coupler: A frame ball type

FSA26-EQU24.0: Equipment
Item Group Specifications

Trailer: Restroom Trailer ADA Compliant

The unit in this group must meet or exceed the following FSA Cooperative Purchasing Program specifications.

FSA Base Specification

- Trailer Construction:
  - Sized for 1 women's, 1 men's, and an ADA wheelchair accessible restroom
  - Frame: Steel frame
  - Axles: Sized for GVWR of trailer, electric brakes
  - Suspension: Hydraulically lowering and raising type suspension
  - Tires and Wheels: Sized for GVWR of trailer
  - Lights: LED turn, stop, and clearance lights DOT compliant
  - Exterior: Aluminum exterior skin, color white
- Trailer Interior Construction:
  - Interior Walls and Ceiling: Smooth aluminum skin, color White, fresh air supply and return
  - Floor: Heavy duty flooring
  - Lighting: LED lighting throughout interior, and porch
  - Mechanical Closet: Fresh water tank system and pump w/ level indicator, electric water heater, waste tank with level indicator, water distribution system, electrical system
  - HVAC System: Roof mount A/C with heat, wall mount thermostat
- Standard Restroom Construction (Women's and Men's Restroom)
  - Doors: Lockable entry doors
  - Trim Level: Soap dispenser, shatterproof mirror ,toilet paper holder, waste basket, paper towel dispenser, self-closing faucet, sink , toilet
- ADA Accessible Restroom Construction:
  - Note: Construction and trim must meet or exceed all current ADA compliance regulations
  - Door: Large wheelchair type entry door , lockable
  - Ramp: Ramp/landing system, with railings, aluminum , portable and easy setup
  - Sink: High clearance sink
  - Toilet: ADA Compliant toilet

  - Handrails and Grab bars: Stainless steel
  - Trim Level: Soap dispenser, shatterproof mirror, toilet paper holder, waste basket, paper towel dispenser, self-closing faucet
- Hook Ups:
  - 120v, 30 amp twist lock w/ 25’ shoreline
  - Fresh water hookup
  - 3” waste quick connect

FSA26-EQU24.0: Equipment
Item Group Specifications

Trailer: Sludge Trailer - 80,000 lbs. GVWR

The unit in this group must meet or exceed the following FSA Cooperative Purchasing Program specifications.

FSA Base Specification

- Dimensions: Length- 30', width- 96", side height- 54"
- Body Construction: ¼ "floor, 0.175 wall, 3/16" tailgate, aluminum
- Crossmembers: 12" spacing
- Top rail: Pockets for 6" wood
- Front and rear tarp caps: Aluminum
- Hoist System: Manufacturers standard hydraulic dump system, plumbed to front of trailer for truck hookups
- Lights: LED lights, mid turn lights, marking DOT compliant
- Tarp: Manual roll type, mesh type tarp
- Tailgate: Over slung type, extreme duty hinges
- Landing Gear: Sized for GVWR of unit
- Axles: Sized for GVWR of unit, oil type hubs
- Suspension: Sized for GVWR of unit, leaf spring type
- Brakes: ABS brake system, outboard mounted drums, automatic slack adjusters, aluminum air tanks
- Tires and Wheels: Steel disc 22.5 x 8.25, 11R22.5 Radial tires
- Miscellaneous: Tow hooks on rear

FSA26-EQU24.0: Equipment
Item Group Specifications

Trailer: Utility/Equipment Trailer - 7,000 lbs. GVWR

The unit in this group must meet or exceed the following FSA Cooperative Purchasing Program specifications.

FSA Base Specification

- Deck Size: 77” x 16’, 7,000 lbs. GVWR
- Sidewall Frame Height: 15” minimum
- Ramps: 48” rear folding tailgate
- Tie Downs: Heavy duty tie rings
- Deck: Treated pine
- Axles: (2) 3,500 lbs.
- Brakes: Electric on all axles
- Suspension: Multi-leaf
- Tires: 205/75R15 Radial tires
- Lighting: All LED DOT compliant, stop/tail/turn, clearance
- Coupler: A-frame 2 5/16” ball adjustable 4 hole
- Jack: 2,000 lbs. heavy duty

FSA26-EQU24.0: Equipment
Item Group Specifications

Trailer: Waste Trailer with Walking Floor

The unit in this group must meet or exceed the following FSA Cooperative Purchasing Program specifications.

FSA Base Specification

- Dimensions: Length- 48’, aluminum width- 102", side height- 100"
- Floor: Keith or Hallco running floor, extreme duty slats with center rib
- Crossmembers: 14" spacing
- Cross tubes: Center and rear cross tubes, bolt in style
- Lights: LED lights, mid-term lights.
- Tarp: Manual roll type- side to side, mesh type tarp
- Tailgate: Side swing- left or right, CAM locking system with safety chain, extreme duty hinges
- Landing Gear: Sized for GVWR of trailer
- Axles: TP axles or equivalent, same inner and outer bearings, outboard mount hubs
- Suspension: Cast hangers, leaf springs
- Tires and Wheels: Steel disc 22.5 x 8.25, 11R22.5 Radial tires
- Miscellaneous: Tow hooks on rear, air deflector in front

FSA26-EQU24.0: Equipment
Item Group Specifications

Transfer Switch: 600 Amp Automatic Transfer Switch

The unit in this group must meet or exceed the following FSA Cooperative Purchasing Program specifications.

FSA Base Specification

- Automatic Transfer Switch: Maximum voltage rating of 600 VAC, 60 Hz, 1Ph or 3Ph, open transition (break-before-make) transfer logic, transfer switch must meet the related industry standards: UL 1008- automatic transfer switches for use in emergency systems, CSA- automatic transfer switches, NEMA- industrial control and systems AC transfer switch equipment, IEC- automatic transfer switching equipment
- Rating: 600-amp, 3 pole, 277/480 VAC, 60Hz, enclosure type- NEMA 3r
- Functional: The automatic transfer switch shall automatically transfer the load to the generator supply in the event of a utility supply failure and return the load to the utility supply upon restoration. The automatic transfer switch power switching devices shall be mechanically and electrically interlocked to prevent the utility and generator supplies from being interconnected. All timers should be field adjustable to ensure proper field site compatibility.
- Automatic Sequence of Operation: When the voltage on any phase of the utility supply is below present levels of rated voltage for a preset time delay, a contact shall close to initiate start of the standby generator. The load shall transfer to the generator supply when the generator voltage and frequency have reached acceptable present levels, and the warmup time delay has expired. When the utility supply is restored to the above present levels of rated voltage on all phases, load transfer from generator to utility supply shall be initiated following expiry of the utility return timer. Once the transfer mechanism operates and opens the generator power switching device, the transfer mechanism shall stop in the neutral position (with both power switching devices open) for the duration of the neutral delay timer setting to allow load voltage to decay prior to reconnecting the utility supply. The load shall be re-connected to the utility supply once the neutral delay timer expires and the transfer mechanism continues operation and closes the utility power switching device. The load shall immediately re-transfer to the utility supply (if within acceptable limits) should the generator supply fail prior to the expiry of the utility transfer delay. The generator set shall continue to operate following

a load transfer for a cool down delay period, and then a contact shall open to stop the generator set. An “on load” test mode may be initiated which shall cause a simulated utility failure condition and transfer the load to the generator set. The transfer sequence shall be the same as for a utility power failure except a neutral delay sequence shall occur when transferring from utility to a generator source. The load shall immediately retransfer to the utility supply (if within acceptable limits) should the generator supply fail during an “on load” test mode.

- Factory Testing: A certified factory test report shall be shipped with each switch at time of shipment. The automatic transfer switch shall be factory tested prior to delivery to the purchaser. The following test shall be conducted by qualified factory personnel: visual inspection, mechanical tests, electrical tests, final inspection.
- Field Testing and Commissioning: The automatic transfer switch shall be field tested once installed at the project site to confirm proper operation of the system. Schedule and witness testing activities shall be coordinated with the project engineer, site contractor, and owner as required in advance of the testing date. A qualified local factory-trained field representative shall conduct the necessary test to ensure proper operation of the switch. Visual inspection- electrical and mechanical inspection to verify the installation is correct as recommended by the transfer switch manufacturer and as per National Electric Code (NEC) requirements. Mechanical tests- as a minimum, the following mechanical tests shall be performed on the transfer switch: power conductor torque verification, verification of mechanical interlock, manual ATS mechanism operation, all mechanical fasteners/wire connections tight, confirmations of correct transfer switch voltage, current and withstand ratings as is required for the application, Meggar testing the power cabling to the transfer switch, verification of correct power cabling phasing and phase rotation prior to energization, confirmation of settings for all timers & voltages sensors, full function test-normal operation- 3 complete cycles of failing the utility supply and transfer load to/from the generator set, verification of all test modes operates correctly.
- Conditions: In addition to equipment specified, each automatic transfer switch shall be equipped with all necessary equipment as specified by the manufacturer for this model and shall include but not be limited to the following necessary items: shrink wrap applied to the product to ensure a clean finish, one complete set of operation and

maintenance manuals, a two (2) year or 1,500 hour from date of standard standby warranty will apply from date of successful startup, labor, materials, and travel for the warranty period repair will be paid by manufacturer during normal business hours.

FSA26-EQU24.0: Equipment
Item Group Specifications

Trencher: Tractor Type

The unit in this group must meet or exceed the following FSA Cooperative Purchasing Program specifications.

Note: Unit bid is for the tractor equipped with a trencher. There are multiple other attachments available which can be purchased from the options page.

FSA Base Specification

- Weight: 9,000 lbs., w/ tracks, 5,900 lbs. w/optional tires
- Engine: 74hp diesel, liquid cooled
- Power Train: Hydrostatic, 4-wheel drive, front and rear wheel steer axles
- Travel Speed: Work mode- variable 0-2 mph, travel mode- variable 0-4 mph
- Tracks: Front and rear rubber tracks, or tires [optional]
- Hydraulics: Auxiliary hydraulics capable of accommodating different attachments, w/ quick disconnects
- Operators Station: ROPS, horn, seat belt, work lights, controls, engine monitoring system
- Trencher: Center mount, 60” trenching depth, 6”- 12” trenching width, hydraulic drive, auger
- Available Attachment Options: Available from options list, purchased separately) side shift trencher, plow, backhoe, backfill blade

FSA26-EQU24.0: Equipment
Item Group Specifications

Trencher: Walk Behind Trencher

The unit in this group must meet or exceed the following FSA Cooperative Purchasing Program specifications.

FSA Base Specification

- Weight: 1,550 lbs.
- Engine: 25 hp gasoline engine, 7-gallon fuel tank, positive feed oil system, starting/charging system
- Ground Drive: Hydrostatic, rubber ground tracks, 7" track width, 31" track length on ground
- Trencher Drive: Hydraulic drive, 8-gallon hydraulic reservoir, hydraulic system spin on filter
- Trencher Boom: Digging depth- 48", Auger diameter- 18", cutting width - 4"
- Controls: Operator presence safety system, low-oil shutdown system, steering control, trencher controls, travel control, boom controls

FSA26-EQU24.0: Equipment
Item Group Specifications

Underground Locating Equipment: Ground Penetrating Radar

Due to the complexity of this type of equipment, there are no base unit specifications.

Purchasers should research and verify the unit bid will meet their desired performance expectations and is compatible with their hardware/software, if required. It is recommended the vendor be contacted to assist with determining performance and compatibility needs prior to purchase.

Unit bid must be ready to work with batteries, carrying cases, and technical manuals.

FSA26-EQU24.0: Equipment
Item Group Specifications

Underground Locating Equipment: Utility Locator

Due to the complexity of this type of equipment, there are no base unit specifications.

Purchasers should research and verify the unit bid will meet their desired performance expectations and is compatible with their hardware/software, if required. It is recommended the vendor be contacted to assist with determining performance and compatibility needs prior to purchase.

Unit bid must be ready to work with batteries, carrying cases, and technical manuals.

FSA26-EQU24.0: Equipment
Item Group Specifications

Vehicle Barrier: Road Closure Barrier System

The unit in this group must meet or exceed the following FSA Cooperative Purchasing Program specifications.

FSA Base Specification

- Road Closure Modular Barrier system: Consisting of 48 portable barriers to close 6 lanes and a specifically built trailer to store and transport the barrier system (all included)
- Individual Modular Barrier: Weight 53 lbs., length 3.87 ‘, width 1.67’, height 2.7’, one person setup w/no tools, linkable, fold up for storage, certifications ASTM-F656-15, IWA 14-1:2013, PAS 68:2013, 667 KJ Energy Absorption, capable of stopping 7 tons of truck
- Transport Trailer: Purpose built for locker storage and transport of 48 barriers, DOT compliant

FSA26-EQU24.0: Equipment
Item Group Specifications

Vehicle Lift: Above Ground Drive On Platform Lift, Pantograph Type

The unit in this group must meet or exceed the following FSA Cooperative Purchasing Program specifications.

FSA Base Specification

- Lifting Capacity: 77,000 lbs.
- Platform Dimensions: Platform length 360” (not including ramps), platform width 30”, spacing between platforms 41”-46”, overall width 104”, collapsed height 17”, lift height 72”
- Lifting Mechanism: Pantograph type, electro/ hydraulic operated lift, automatic safety locks w/ multiple locking positions, automatic wheel chocks, emergency manual lowering system
- Controls: Manufacturer standard controls, console mounted
- Electrical: 208/220/440/480 3 phase 60 hz, sealed electrical system
- Certification: ANSI/ETL Certification

FSA26-EQU24.0: Equipment
Item Group Specifications

Vehicle Lift: In Ground Drive On Platform Lift, Scissor Type

The unit in this group must meet or exceed the following FSA Cooperative Purchasing Program specifications.

Note: This unit will require modification to the facility floor for installation.

FSA Base Specification

- Lifting Capacity: 50,000 lbs.
- Platform Dimensions: Platform length 341”, platform width 31”, spacing between platforms 43”, overall width 104”, collapsed height 15”, lift height 75”
- Lifting Mechanism: Scissor type, electro/ hydraulic operated lift, automatic safety locks w/ multiple locking positions, automatic wheel chocks,
- Controls: Manufacturer standard controls, console mounted
- Electrical: 220/440 3 phase 60 hz, sealed electrical system
- Certification: ANSI/ETL Certification

FSA26-EQU24.0: Equipment
Item Group Specifications

Vehicle Lift: Mobile - 2 Column, Cabled

The unit in this group must meet or exceed the following FSA Cooperative Purchasing Program specifications.

FSA Base Specification

- Lift Capacity: Combined lift capacity of 36,000 lbs., 18,000 lbs. per column
- Carriage: Rise 67", carriage fork to fit rim sizes 13" to 24", adjustable or reduction sleeve type
- Controls: Manufacturers standard controls
- Safety: Mechanical safety locks, override to manual operation in the event of power loss, meets all applicable safety standards
- Power: Cabled base, voltage 208-230 3-phase
- Equipment must comply with all applicable federal, state, and local regulations and meet OSHA, UL-201, NEC, and the latest ANSI standard, ANSI/ALI -ALCTV 2006 and IBC 2003, IBC 2006 Chapter 30 section 3001.2. Equipment must be structurally and safety tested and certified to ANSI/ALI -ALCTV 2006 automotive lift standard. A copy of listing certification shall be supplied as part of the acceptance of the bid. Equipment must be supplied with all ANSI, ALI/ETL safety booklet, ANSI operations, installation, and maintenance booklets, ANSI/ALI aloim-2008 standard and lifting point guides. Equipment must be supplied with all ANSI, ALI/ETL safety decals. Decals must be permanently placed on the lift in clear view for the operator.

FSA26-EQU24.0: Equipment
Item Group Specifications

Vehicle Lift: Mobile - 2 Column, Wireless

The unit in this group must meet or exceed the following FSA Cooperative Purchasing Program specifications.

FSA Base Specification

- Lift Capacity: Combined lift capacity of 36,000 lbs., 18,000 lbs. per column
- Carriage: Rise 67”, carriage fork to fit rim sizes 13” to 24”, adjustable or reduction sleeve type
- Controls: Manufacturers standard controls
- Safety: Mechanical safety locks, override to manual operation in the event of power loss, meets all applicable safety standards, training included with purchase
- Power: Wireless
- Equipment must comply with all applicable federal, state, and local regulations and meet OSHA, UL-201, NEC, and the latest ANSI standard, ANSI/ALI -ALCTV 2006 and IBC 2003, IBC 2006 Chapter 30 section 3001.2. Equipment must be structurally and safety tested and certified to ANSI/ALI -ALCTV 2006 automotive lift standard. A copy of listing certification shall be supplied as part of the acceptance of the bid. Equipment must be supplied with all ANSI, ALI/ETL safety booklet, ANSI operations, installation, and maintenance booklets, ANSI/ALI aloim-2008 standard and lifting point guides. Equipment must be supplied with all ANSI, ALI/ETL safety decals. Decals must be permanently placed on the lift in clear view for the operator.

FSA26-EQU24.0: Equipment
Item Group Specifications

Vehicle Lift: Mobile - 4 Column, Cabled

The unit in this group must meet or exceed the following FSA Cooperative Purchasing Program specifications.

FSA Base Specification

- Lift Capacity: Combined lift capacity of 72,000 lb.; 18,000 lb. per column.
- Carriage: Rise 67”, carriage fork to fit rim sizes 13” to 24”, adjustable or reduction sleeve type
- Controls: Manufacturers standard controls
- Safety: Mechanical safety locks, override to manual operation in the event of power loss, meets all applicable safety standards
- Power: Cabled base
- Equipment must comply with all applicable federal, state, and local regulations and meet OSHA, UL-201, NEC, and the latest ANSI standard, ANSI/ALI -ALCTV 2006 and IBC 2003, IBC 2006 Chapter 30 section 3001.2. Equipment must be structurally and safety tested and certified to ANSI/ALI -ALCTV 2006 automotive lift standard. A copy of listing certification shall be supplied as part of the acceptance of the bid. Equipment must be supplied with all ANSI, ALI/ETL safety booklet, ANSI operations, installation, and maintenance booklets, ANSI/ALI aloim-2008 standard and lifting point guides. Equipment must be supplied with all ANSI, ALI/ETL safety decals. Decals must be permanently placed on the lift in clear view for the operator.

FSA26-EQU24.0: Equipment
Item Group Specifications

Vehicle Lift: Mobile - 4 Column, Wireless

The unit in this group must meet or exceed the following FSA Cooperative Purchasing Program specifications.

FSA Base Specification

- Lift Capacity: Combined lift capacity of 72,000 lbs., 18,000 lbs. per column
- Carriage: Rise 67", carriage fork to fit rim sizes 13" to 24", adjustable or reduction sleeve type
- Controls: Manufacturers standard controls
- Safety: Mechanical safety locks, override to manual operation in the event of power loss, meets all applicable safety standards, training included with purchase
- Power: Wireless
- Equipment must comply with all applicable federal, state, and local regulations and meet OSHA, UL-201, NEC, and the latest ANSI standard, ANSI/ALI -ALCTV 2006 and IBC 2003, IBC 2006 Chapter 30 section 3001.2. Equipment must be structurally and safety tested and certified to ANSI/ALI -ALCTV 2006 automotive lift standard. A copy of listing certification shall be supplied as part of the acceptance of the bid. Equipment must be supplied with all ANSI, ALI/ETL safety booklet, ANSI operations, installation, and maintenance booklets, ANSI/ALI aloim-2008 standard and lifting point guides. Equipment must be supplied with all ANSI, ALI/ETL safety decals. Decals must be permanently placed on the lift in clear view for the operator.

FSA26-EQU24.0: Equipment
Item Group Specifications

Vehicle Lift: Mobile - 6 Column, Cabled

The unit in this group must meet or exceed the following FSA Cooperative Purchasing Program specifications.

FSA Base Specification

- Lift Capacity: Combined lift capacity of 108,000 lbs., 18,000 lbs. per column
- Carriage: Rise 67", carriage fork to fit rim sizes 13" to 24", adjustable or reduction sleeve type
- Controls: Manufacturers standard controls
- Safety: Mechanical safety locks, override to manual operation in the event of power loss, meets all applicable safety standards
- Power: Cabled base
- Equipment must comply with all applicable federal, state, and local regulations and meet OSHA, UL-201, NEC, and the latest ANSI standard, ANSI/ALI -ALCTV 2006 and IBC 2003, IBC 2006 Chapter 30 section 3001.2. Equipment must be structurally and safety tested and certified to ANSI/ALI -ALCTV 2006 automotive lift standard. A copy of listing certification shall be supplied as part of the acceptance of the bid. Equipment must be supplied with all ANSI, ALI/ETL safety booklet, ANSI operations, installation, and maintenance booklets, ANSI/ALI aloim-2008 standard and lifting point guides. Equipment must be supplied with all ANSI, ALI/ETL safety decals. Decals must be permanently placed on the lift in clear view for the operator.

FSA26-EQU24.0: Equipment
Item Group Specifications

Vehicle Lift: Mobile - 6 Column, Wireless

The unit in this group must meet or exceed the following FSA Cooperative Purchasing Program specifications.

FSA Base Specification

- Lift Capacity: Combined lift capacity of 108,000 lbs., 18,000 lbs. per column
- Carriage: Rise 67", carriage fork to fit rim sizes 13" to 24", adjustable or reduction sleeve type
- Controls: Manufacturers standard controls
- Safety: Mechanical safety locks, override to manual operation in the event of power loss, meets all applicable safety standards: training included with purchase
- Power: Wireless
- Equipment must comply with all applicable federal, state, and local regulations and meet OSHA, UL-201, NEC, and the latest ANSI standard, ANSI/ALI -ALCTV 2006 and IBC 2003, IBC 2006 Chapter 30 section 3001.2. Equipment must be structurally and safety tested and certified to ANSI/ALI -ALCTV 2006 automotive lift standard. A copy of listing certification shall be supplied as part of the acceptance of the bid. Equipment must be supplied with all ANSI, ALI/ETL safety booklet, ANSI operations, installation, and maintenance booklets, ANSI/ALI aloim-2008 standard and lifting point guides. Equipment must be supplied with all ANSI, ALI/ETL safety decals. Decals must be permanently placed on the lift in clear view for the operator.

FSA26-EQU24.0: Equipment
Item Group Specifications

Vehicle Lift: Mobile - 8 Column, Cabled

The unit in this group must meet or exceed the following FSA Cooperative Purchasing Program specifications.

FSA Base Specification

- Lift Capacity: Combined lift capacity of 144,000 lbs.; 18,000 lb. per column.
- Carriage: Rise 67", carriage fork to fit rim sizes 13" to 24", adjustable or reduction sleeve type
- Controls: Manufacturers standard controls
- Safety: Mechanical safety locks, override to manual operation in the event of power loss, meets all applicable safety standards
- Power: Cabled base
- Equipment must comply with all applicable federal, state, and local regulations and meet OSHA, UL-201, NEC, and the latest ANSI standard, ANSI/ALI -ALCTV 2006 and IBC 2003, IBC 2006 Chapter 30 section 3001.2. Equipment must be structurally and safety tested and certified to ANSI/ALI -ALCTV 2006 automotive lift standard. A copy of listing certification shall be supplied as part of the acceptance of the bid. Equipment must be supplied with all ANSI, ALI/ETL safety booklet, ANSI operations, installation, and maintenance booklets, ANSI/ALI aloim-2008 standard and lifting point guides. Equipment must be supplied with all ANSI, ALI/ETL safety decals. Decals must be permanently placed on the lift in clear view for the operator.

FSA26-EQU24.0: Equipment
Item Group Specifications

Vehicle Lift: Mobile - 8 Column, Wireless

The unit in this group must meet or exceed the following FSA Cooperative Purchasing Program specifications.

FSA Base Specification

- Lift Capacity: Combined lift capacity of 144,000 lbs., 18,000 lbs. per column
- Carriage: Rise 67", carriage fork to fit rim sizes 13" to 24", adjustable or reduction sleeve type
- Controls: Manufacturers standard controls
- Safety: Mechanical safety locks, override to manual operation in the event of power loss, meets all applicable safety standards, training included with purchase
- Power: Wireless
- Equipment must comply with all applicable federal, state, and local regulations and meet OSHA, UL-201, NEC, and the latest ANSI standard, ANSI/ALI -ALCTV 2006 and IBC 2003, IBC 2006 Chapter 30 section 3001.2. Equipment must be structurally and safety tested and certified to ANSI/ALI -ALCTV 2006 automotive lift standard. A copy of listing certification shall be supplied as part of the acceptance of the bid. Equipment must be supplied with all ANSI, ALI/ETL safety booklet, ANSI operations, installation, and maintenance booklets, ANSI/ALI aloim-2008 standard and lifting point guides. Equipment must be supplied with all ANSI, ALI/ETL safety decals. Decals must be permanently placed on the lift in clear view for the operator.

FSA26-EQU24.0: Equipment
Item Group Specifications

Vehicle Lift: Above Ground - 2 Post Asymmetric Stationary Vehicle Lift 10k

The unit in this group must meet or exceed the following FSA Cooperative Purchasing Program specifications.

FSA Base Specification

- Lift Capacity: 10,000 lbs.
- Dimension: minimum width- 125”, minimum width between posts- 110”, minimum extended cylinder height- 142.5”, minimum full rise height- 72”, minimum ceiling height required- 12’
- Operation: Speed of rise- fully lowered to fully raised in 50 seconds
- Safety: Manual or automatic lock release, meets all applicable safety standards
- Motor: 2.0 hp 208-230 V minimum
- Accessories: Power upgrades options, air/electric workstation w/ filter/lubricator/regulator, tire tool, manager workstation w/ filter/lubricator/regulator, column height extensions, door protection
- Equipment must comply with all applicable federal, state, and local regulations and meet OSHA, UL-201, NEC, and the latest ANSI standard, ANSI/ALI -ALCTV 2006 and IBC 2003, IBC 2006 Chapter 30 section 3001.2. Equipment must be structurally and safety tested and certified to ANSI/ALI -ALCTV 2006 automotive lift standard. A copy of listing certification shall be supplied as part of the acceptance of the bid. Equipment must be supplied with all ANSI, ALI/ETL safety booklet, ANSI operations, installation, and maintenance booklets, ANSI/ALI aloim-2008 standard and lifting point guides. Equipment must be supplied with all ANSI, ALI/ETL safety decals. Decals must be permanently placed on the lift in clear view for the operator.

FSA26-EQU24.0: Equipment
Item Group Specifications

Vehicle Lift: Above Ground - 2 Post Symmetric Stationary Vehicle Lift 12k

The unit in this group must meet or exceed the following FSA Cooperative Purchasing Program specifications.

FSA Base Specification

- Lift Capacity: 12,000 lbs.
- Dimension: Minimum width- 139”, minimum width between posts- 114 7/8”, minimum extended cylinder height- 160”, minimum full rise height- 72”, maximum ceiling height required- 16’
- Operation: Speed of rise- fully lowered to fully raised in 90 seconds
- Safety: Manual or automatic lock release, meets all applicable safety standards
- Motor: 2.0 hp 208-230 V minimum
- Accessories: Power upgrades options, air/electric workstation, w/ filter/lubricator/regulator, tire tool manager workstation w/ filter/lubricator/regulator, column height extensions, door protection
- Equipment must comply with all applicable federal, state, and local regulations and meet OSHA, UL-201, NEC, and the latest ANSI standard, ANSI/ALI -ALCTV 2006 and IBC 2003, IBC 2006 Chapter 30 section 3001.2. Equipment must be structurally and safety tested and certified to ANSI/ALI -ALCTV 2006 automotive lift standard. A copy of listing certification shall be supplied as part of the acceptance of the bid. Equipment must be supplied with all ANSI, ALI/ETL safety booklet, ANSI operations, installation, and maintenance booklets, ANSI/ALI aloim-2008 standard and lifting point guides. Equipment must be supplied with all ANSI, ALI/ETL safety decals. Decals must be permanently placed on the lift in clear view for the operator.

FSA26-EQU24.0: Equipment
Item Group Specifications

Vehicle Lift: Above Ground - 2 Post Symmetric Stationary Vehicle Lift 15k

The unit in this group must meet or exceed the following FSA Cooperative Purchasing Program specifications.

FSA Base Specification

- Lift Capacity: 15,000 lbs.
- Dimension: Minimum width- 125”, minimum width between posts- 120”, minimum extended cylinder height- 160”, minimum full rise height- 72”, maximum ceiling height required- 17’
- Operation: Speed of rise- fully lowered to fully raised in 90 seconds
- Safety: Manual or automatic lock release, meets all applicable safety standards
- Motor: 2.0 hp 208-230 V minimum
- Accessories: Power upgrades options, air/electric workstation, w/ filter/lubricator/regulator, tire tool manager workstation w/ filter/lubricator/regulator, column height extensions, door protection.
- Equipment must comply with all applicable federal, state, and local regulations and meet OSHA, UL-201, NEC, and the latest ANSI standard, ANSI/ALI -ALCTV 2006 and IBC 2003, IBC 2006 Chapter 30 section 3001.2. Equipment must be structurally and safety tested and certified to ANSI/ALI -ALCTV 2006 automotive lift standard. A copy of listing certification shall be supplied as part of the acceptance of the bid. Equipment must be supplied with all ANSI, ALI/ETL safety booklet, ANSI operations, installation, and maintenance booklets, ANSI/ALI aloim-2008 standard and lifting point guides. Equipment must be supplied with all ANSI, ALI/ETL safety decals. Decals must be permanently placed on the lift in clear view for the operator.

FSA26-EQU24.0: Equipment
Item Group Specifications

Vehicle Lift: Above Ground - 2 Post Symmetric Stationary Vehicle Lift 18k

The unit in this group must meet or exceed the following FSA Cooperative Purchasing Program specifications.

FSA Base Specification

- Lift Capacity: 18,000 lbs.
- Dimension: Minimum width- 125”, minimum width between posts- 118”, minimum extended cylinder height- 142.5”, minimum full rise height- 85”, maximum ceiling height required- 17’
- Operation: Speed of rise- fully lowered to fully raised in 60 seconds
- Safety: Manual or automatic lock release, meets all applicable safety standards
- Motor: 3.0 hp 208-230 V minimum
- Accessories: Power upgrades options, air/electric workstation, w/ filter/lubricator/regulator, tire tool manager workstation w/ filter/lubricator/regulator, column height extensions, door protection
- Equipment must comply with all applicable federal, state, and local regulations and meet OSHA, UL-201, NEC, and the latest ANSI standard, ANSI/ALI -ALCTV 2006 and IBC 2003, IBC 2006 Chapter 30 section 3001.2. Equipment must be structurally and safety tested and certified to ANSI/ALI -ALCTV 2006 automotive lift standard. A copy of listing certification shall be supplied as part of the acceptance of the bid. Equipment must be supplied with all ANSI, ALI/ETL safety booklet, ANSI operations, installation, and maintenance booklets, ANSI/ALI aloim-2008 standard and lifting point guides. Equipment must be supplied with all ANSI, ALI/ETL safety decals. Decals must be permanently placed on the lift in clear view for the operator.

FSA26-EQU24.0: Equipment
Item Group Specifications

Vehicle Lift: Above Ground - 2 Post Versymmetric Stationary Vehicle Lift 10k

The unit in this group must meet or exceed the following FSA Cooperative Purchasing Program specifications.

FSA Base Specification

- Lifting Capacity: 10,000 lbs.
- Lifting Configuration: Versymmetric (symmetric & asymmetric) arms 3-stage front/3-stage rear, rise height- 74.125”, overall height- 134”/140”, overall height (cylinder extended)- 143”, overall width- 138.5”/ 143”, drive-thru clearance- 100”/104.5”, floor to overhead switch- 128.5”/134.5”, front arm reach- 20”-42”, rear arm reach- 37.625”-60”, screw pad height- 3.875”-6.125”, inside columns- 110”/114.5”, motor/voltage- 2 hp, 208V-230V, 60 Hz, 1 Ph, speed of rise- 38 seconds, ceiling height required 12’, ALI/ETL certified

FSA26-EQU24.0: Equipment
Item Group Specifications

Vehicle Lift: Above Ground - 4 Column, Alignment Lift with Front/Rear Jacks and Integrated Turntables and Slip Plates 14k

The unit in this group must meet or exceed the following FSA Cooperative Purchasing Program specifications.

FSA Base Specification

- Lifting Capacity: 15,000 lbs.
- Lifting Configuration: Open or closed- front open max, wheelbase- 210”, rise height- 78”, overall length- 277.25”, overall width- 142” front/134.5” rear, inside columns- 120”, between columns- 222.5”, height of columns- 99.5”/93.5”, width of runways- 20”, height of runways- 7”, width between runways- 43” max, 2-wheel alignment- 194”, 4-wheel alignment- 88”-158”, air supply required- 90-120 psi, motor/voltage- 2 hp, 208V-230V, 60 Hz, speed or rise- 85 seconds, minimum recommended bay size- 12’ x 26’, ALI/ETL certified, colors available- red, blue, black

FSA26-EQU24.0: Equipment
Item Group Specifications

Vehicle Lift: Above Ground - 4 Post Alignment Lift with Turnplates and Rolling Jack 30k

The unit in this group must meet or exceed the following FSA Cooperative Purchasing Program specifications.

FSA Base Specification

- Lifting Capacity: 30,000 lbs.
- Max Wheelbase: 244”
- Rise Height: 71”
- Overall Length: 25’ 8”
- Overall Width: 14’ 4”
- Inside Columns: 12’8”,
- Between Columns: 20’6”
- Height of Columns: 93”
- Width of Runways: 24”
- Height of Runways: 10”
- Width between Runways: 46”
- Entry Ramps: Drive on ramps
- Locks: Automatic safety lifting locks
- Wheel Stops: Automatic wheel stop system
- Turntables: Turntables / turnplates for ease of alignment
- Rolling Jack: Rolling jack, air operated
- Rail System: Rail system for rolling jacks and or [optional] drain pans
- Air System: Lift plumbed for air supply and rolling jack
- Air Supply Required: 90-120 psi,
- Motor/Voltage: 3 hp, 208V-230V, 60 Hz,1ph
- Speed or Rise: 126 seconds,
- ALI/ETL certified

FSA26-EQU24.0: Equipment
Item Group Specifications

Vehicle Lift: Above Ground - 4 Post, Lift 14k

The unit in this group must meet or exceed the following FSA Cooperative Purchasing Program specifications.

FSA Base Specification

- Lifting Capacity: 14,000 lbs.
- Max Wheelbase: 182”
- Rise Height: 6’6”
- Overall Length: 20’5”
- Overall Width: 10’ 11”
- Inside Columns: 9’8”,
- Between Columns: 16’4”
- Height of Columns: 7’6”
- Width of Runways: 20”
- Height of Runways: 7”
- Width Between Runways: 40”
- Entry Ramps: Drive on ramps
- Locks: Automatic safety lifting locks
- Wheel Chocks: Automatic wheel chock system
- Rail System: Rail system for optional rolling jacks and or drain pans
- Electrical Required :208V-230V, 60 Hz, 1ph
- Speed or Rise: 75 seconds
- ALI/ETL certified

FSA26-EQU24.0: Equipment
Item Group Specifications

Vehicle Lift: Above Ground - 4 Post, Lift 30k

The unit in this group must meet or exceed the following FSA Cooperative Purchasing Program specifications.

FSA Base Specification

- Lifting Capacity: 30,000 lbs.
- Max Wheelbase: 244”
- Rise Height: 71”
- Overall Length: 25’ 8”
- Overall Width: 14’ 4”
- Inside Columns: 12’8”,
- Between Columns: 20’6”
- Height of Columns: 93”
- Width of Runways: 24”
- Height of Runways: 10”
- Width Between Runways: 46”
- Entry Ramps: Drive on ramps
- Locks: Automatic safety lifting locks
- Wheel Chocks: Automatic wheel chock system
- Rail System: Rail system for optional rolling jacks and or drain pans
- Air Supply Required: 90-120 psi,
- Motor/Voltage: 3 hp, 208V-230V, 60 Hz, 1ph
- Speed or Rise: 126 seconds
- ALI/ETL certified

410 P

Backhoe Loader

JOHN DEERE





READY TO RUN IN THE REAL WORLD

When owners and operators just like you — the people who know what customers need for their operations to succeed — weighed in on our latest backhoe loaders, we heeded the real-world feedback. You asked for one machine that capably completes the work of two. A powerful overachiever with outstanding loader performance, backhoe capability, and multifunction versatility. Featuring streamlined transitions between front loader and rear backhoe functionality. And packed with productivity-elevating options to match the application. The 410 P-Tier Backhoe is a standout multitasker ready to run — and get more done — in any corner of the working world.



FEATURES

Powerful engine technology
Rugged EPA Final Tier 4 (FT4)/EU Stage IV John Deere PowerTech™ EWL engine boosts power, torque, and reliability compared to previous models. Simple two-valve cylinder-head, wet-sleeve design with replaceable cylinder liners provides uniform cooling and aids in reducing oil breakdown and ring wear. Filters have been redesigned and relocated for easier servicing over earlier models.

Elevated experience
Pressure-compensated, load-sensing (PCLS) hydraulics provide excellent multifunctioning, smooth machine control, and up to 15-percent greater craning capacity when Lift Mode is engaged, collectively providing a distinctive operator experience and unmatched machine performance. Trenching operation can be conducted at a lower engine rpm, reducing fuel consumption and jobsite noise.

Forward thinking
When enabled on the 25-button sealed-switch module, AutoShift automatically shifts the PowerShift™ transmission to the appropriate gear. Simply set the control lever to the highest gear desired, and the transmission will optimally shift based on engine rpm and ground speed. Included in the base machine configuration, AutoShift enhances operator ease of use during extended transport or load-and-carry applications.

Always on the move
Limited-slip mechanical-front-wheel drive (MFWD) delivers sure-footed traction in any ground condition. Engage momentary MFWD "on the fly" with a touch of a button on the loader control.

Let there be (more) light
Optional LED 10-light package brightens darker jobsites. Optional four-corner, low-profile LED beacon system and field-kit boom light boost machine visibility to crew and bystanders.

Get set for a new view
Exclusive to the backhoe industry, our optional rearview camera system with a dedicated eight-inch touchscreen display allows the operator to "overlay the view" to virtually remove the rear machine structure.

It all looks good from here
Operator station is wider and features an updated HVAC system that outputs 10-percent more airflow compared to the previous model. Rear and side windows have been restyled for clear visibility. Appreciate the standard adjustable mechanical seat, or opt for an air-suspension or new premium heated and vented seat. Sealed-switch module now on the vertical cab post and eye-level fuel and temperature gauges ease operator awareness and navigation.

Control the ride and the load
Auto ride control eliminates the need to manually turn the feature on and off during load-and-carry applications, enhancing the operator's ease of use. When activated, front loader cylinders function as a shock absorber, smoothing the ride over rough terrain and reducing material spillage. On/Off functionality is controlled by ground speed and can be adjusted by the operator in the cab's display monitor.

Save fuel with economy mode
Standard economy mode can be configured separately between loader and backhoe functions. Activate economy mode for backhoe functions while retaining full power for loader functions. This helps maximize fuel usage in lighter-work applications with minimal effect on machine performance.

Take it easy
Highly populated "palm-on-top" loader-control grip is intuitive and easy to use.

Nice and precise
Standard precision mode reduces the speed of hydraulic backhoe functions without sacrificing lift capacity, for close work around underground utilities or jobsite obstacles, or when lifting — also useful for less experienced operators.



CAB COMFORTS ELEVATE THE OPERATOR EXPERIENCE









Hit the ground running
Same-side ground-level service points speed daily checks and fills. Other commonsense features such as quick-change filters, extended service intervals, simple-to-read sight gauges, and easy-access grease zerks help increase uptime.

Connected machines
John Deere construction equipment comes with in-base connectivity — free from subscriptions or annual renewals. Analyze critical machine data, track utilization, review diagnostic alerts, and more from **the John Deere Operations Center™.** The Operations Center also enables John Deere Connected Support™, which uses data from thousands of connected machines to proactively address issues before they arise. With your approval, your dealer can also remotely monitor machine health, diagnose problems, and even update machine software without a trip to the jobsite.*

*Availability varies by region and product. Options not available in every country.

410

P

410 P-TIER BACKHOE LOADER SPECIFICATIONS

While general information, pictures, and descriptions are provided, some illustrations and text may include product options and accessories NOT AVAILABLE in all regions, and in some countries products and accessories may require modifications or additions to ensure compliance with the local regulations of those countries.

Engine	**410 P-TIER**	
Manufacturer and Model	John Deere PowerTech™ EWL 4.5L 4045HL052 turbocharged	
Non-Road Emission Standard	EPA Final Tier 4/EU Stage IV	
Displacement	4.5 L (276 cu. in.)	
Gross Peak Power	88 kW (118 hp) at 1,900 rpm	
Net Peak Power (ISO 9249)	87 kW (116 hp) at 1,900 rpm	
Net Peak Torque (ISO 9249)	459 Nm (338 lb.-ft.) at 1,600 rpm	
Net Torque Rise	26%	
Lubrication	Pressure system with spin-on filter and cooler	
Air Cleaner	Dual-stage dry type with safety element and evacuator valve	
Cooling		
Fan Type	Electronically controlled, variable-rate, suction-type cooling fan standard	
Engine Coolant Rating	–40 deg. C (–40 deg. F)	
Engine Oil Cooler	Oil to water	
Powertrain		
Transmission	5-speed, helical-cut gears, full PowerShift™ transmission with hydraulic reverser standard; electric clutch cutoff on loader lever; AutoShift transmission standard	
Torque Converter	Single stage, dual phase with 2.63:1 stall ratio, 280 mm (11 in.)	
PowerShift Standard Transmission		
Maximum Travel Speeds With Standard Engine and 21L-24 Rear Tires	*Forward*	*Reverse*
Gear 1	5.5 km/h (3.4 mph)	7.0 km/h (4.3 mph)
Gear 2	10.1 km/h (6.3 mph)	12.8 km/h (8.0 mph)
Gear 3	20.9 km/h (13.0 mph)	20.6 km/h (12.8 mph)
Gear 4	38.0 km/h (23.6 mph)	—
Gear 5	40.0 km/h (24.9 mph)	—
Axles		
Axle Oscillation, Stop to Stop, Front Axle	22 deg.	
Axle Ratings	*Front*	*Rear*
SAE J43	6500 kg (14,300 lb.)	7500 kg (16,500 lb.)
Dynamic	9000 kg (19,800 lb.)	10 000 kg (22,000 lb.)
Static	26 500 kg (58,400 lb.)	26 500 kg (58,400 lb.)
Ultimate	43 500 kg (95,900 lb.)	43 500 kg (95,900 lb.)
Differentials		
Mechanical-Front-Wheel-Drive (MFWD) Axle	Automatic, limited-slip traction control	
Rear Axle	Loader-grip actuated, hydraulically engaged 100% mechanical lock	
Steering (ISO 5010)	Hydrostatic power steering and emergency steering	
Axle	*MFWD*	
Curb-Turning Radius		
With Brakes	3.53 m (11 ft. 7 in.)	
Without Brakes	4.02 m (13 ft. 2 in.)	
Bucket-Clearance Circle		
With Brakes	10.31 m (33 ft. 10 in.)	
Without Brakes	11.04 m (36 ft. 3 in.)	
Steering Wheel Turns (lock to lock)	2.5 to 3.5	
MFWD Axle	Heavy duty, outboard planetary final drives distribute shock loads over 3 gears	
Rear Axle	Heavy duty, outboard planetary final drives distribute shock loads over 4 gears	
Brakes (ISO 3450)		
Service	Power assisted, hydraulic wet disc, mounted inboard, self-adjusting and self-equalizing	
Parking	Spring applied, hydraulically released, wet, multi-disc, independent of service brakes with electric switch control	

410 P-TIER BACKHOE LOADER SPECIFICATIONS

While general information, pictures, and descriptions are provided, some illustrations and text may include product options and accessories NOT AVAILABLE in all regions, and in some countries products and accessories may require modifications or additions to ensure compliance with the local regulations of those countries.

Hydraulics	**410 P-TIER**
Main Pump	Pressure compensated load sensing (PCLS), axial-piston pump
Pump Flow at 2,200 rpm	
Backhoe	163 L/m (43 gpm)
Loader	163 L/m (43 gpm)
System Relief Pressure	
Backhoe	24 993 kPa (3,625 psi)
Lift Mode	27 579 kPa (4,000 psi)
Loader	24 993 kPa (3,625 psi)
Controls	
Backhoe	Pilot controls with pattern select standard; electrohydraulic (EH) auxiliary functions optional
Loader	Single-lever control with horn, rear differential lock, electric clutch cutoff switch, MFWD (momentary), and gear-selection buttons standard; single-lever control with horn, rear differential lock, electric clutch cutoff switch, MFWD (momentary), gear-selection buttons, and EH proportional auxiliary roller optional

Cylinders			
Heat-treated, chrome-plated, polished rods; hardened steel (replaceable bushings) pivot pins			
	Bore	*Rod Diameter*	*Stroke*
Loader Boom (2)	80 mm (3.15 in.)	50 mm (1.97 in.)	790 mm (31.10 in.)
Loader Bucket (1)	90 mm (3.54 in.)	50 mm (1.97 in.)	744 mm (29.29 in.)
Backhoe Boom (1)	140 mm (5.51 in.)	70 mm (2.76 in.)	897 mm (35.31 in.)
Backhoe Crowd (1)	120 mm (4.72 in.)	63 mm (2.48 in.)	727 mm (28.62 in.)
Backhoe Bucket (1)	100 mm (3.94 in.)	63 mm (2.48 in.)	810 mm (31.89 in.)
Backhoe Swing (2)	90 mm (3.54 in.)	50 mm (1.97 in.)	278 mm (10.94 in.)
Backhoe Extendable Dipperstick (1)	80 mm (3.15 in.)	45 mm (1.77 in.)	1214 mm (47.78 in.)
Backhoe Stabilizer, Extended (2)	100 mm (3.94 in.)	50 mm (1.97 in.)	500 mm (19.69 in.)
MFWD (1)	65 mm (2.56 in.)	40 mm (1.57 in.)	210 mm (8.27 in.)

Electrical	
Voltage	12 volt
Alternator Rating	145 amp
Lights	10 halogen: 4 front, 4 rear, and 2 side docking (HB3 [high-beam] bulb); turn signals and flashers: 2 front and 2 rear; stop and taillights; and 2 rear reflectors; factory-installed option for 10 LED floodlights in lieu of standard halogen light package

Operator Station	
Type (ISO 3471)	Fully enclosed cab, isolation mounted, ROPS/FOPS, left/right access, with molded roof; optional canopy

Tires/Wheels		
	Front	*Rear*
With MFWD	12.5/80-18 R4 (10)	21L-24 R4 (12)
	340/80R18 XMCL	500/70R24 XMCL
	340/80R18 550	500/70R24 550
	340/80R18 580	500/70R24 580

Serviceability	
Refill Capacities	
Cooling System	
Cab	27.5 L (29.1 qt.)
Canopy	25.7 L (27.2 qt.)
Rear Axle	18.0 L (19.0 qt.)
Engine Oil (including vertical spin-on filter)	13.0 L (13.7 qt.)
Torque Converter and Transmission	15.1 L (16.0 qt.)

Refill Capacities *(continued)*	
Fuel Tank (with ground-level fueling)	128.7 L (34.0 gal.)
Diesel Exhaust Fluid (DEF) Tank	13.7 L (3.6 gal.)
Hydraulic System	138.9 L (36.7 gal.)
Hydraulic Reservoir	45.5 L (12.0 gal.)
MFWD Axle	
Differential Housing	6.5 L (6.9 qt.)
Planetary (each)	0.9 L (1.0 qt.)

410 P-TIER

While general information, pictures, and descriptions are provided, some illustrations and text may include product options and accessories NOT AVAILABLE in all regions, and in some countries products and accessories may require modifications or additions to ensure compliance with the local regulations of those countries.

Operating Weights	410 P-TIER
ISO 6016 Operating Mass	8875 kg (19,566 lb.)
ISO 6016 Gross Machinery Mass	10 000 kg (22,046 lb.)
With Full Fuel Tank, 75-kg (165 lb.) Operator, Standard Equipment, Canopy, and 340-kg (750 lb.) Counterweight	8460 kg (18,651 lb.)
Typical With Cab, Extendable Dipperstick, and 567-kg (1,250 lb.) Counterweight	9291 kg (20,483 lb.)
Optional Components (weight difference between base equipment and option)	
Cab	336 kg (741 lb.)
Extendable Dipperstick	268 kg (591 lb.)
Front Loader Coupler	299 kg (659 lb.)
Backhoe Bucket Coupler	120 kg (265 lb.)
Overall Dimensions *[see line art below]*	
A Ground Clearance, Minimum	329 mm (13 in.)
B Overall Length, Transport	7.58 m (24 ft. 10 in.)
C Width Over Tires	2.34 m (7 ft. 8 in.)
D Height to Top of ROPS/Cab	2.89 m (9 ft. 6 in.)
E Length From Axle to Axle, MFWD Axle	2.19 m (7 ft. 2 in.)

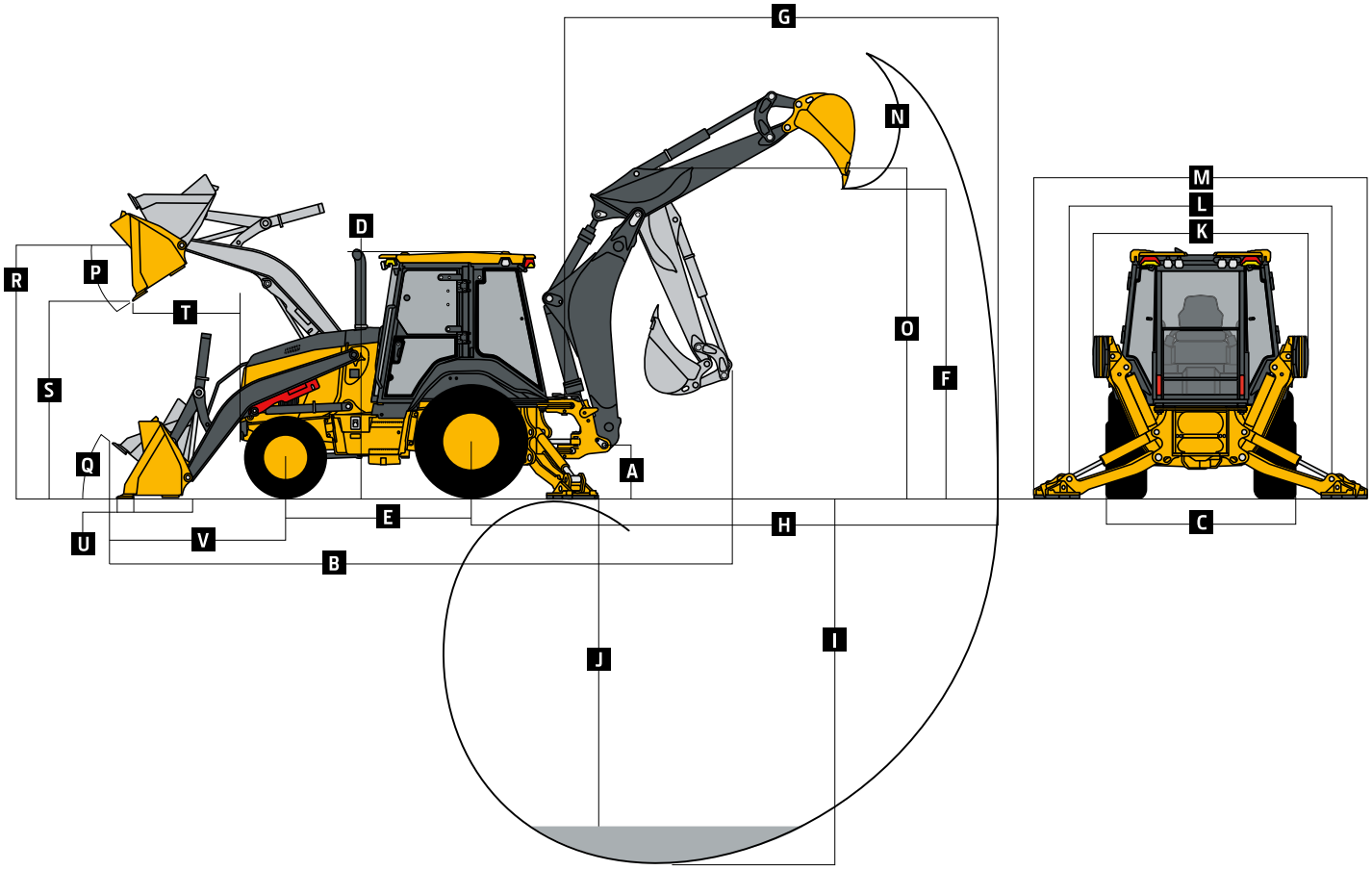

While general information, pictures, and descriptions are provided, some illustrations and text may include product options and accessories NOT AVAILABLE in all regions, and in some countries products and accessories may require modifications or additions to ensure compliance with the local regulations of those countries.

Backhoe Dimensions and Performance *[see line art below left]*		**410 P-TIER**		
Backhoe specifications are with 610-mm x 0.21-m³ (24 in. x 7.5 cu. ft.) bucket; dipper lift specs are with a boom angle of 60 deg.				
	Bucket Range	305–610 mm (12–24 in.)		
	Digging Force			
	Bucket Cylinder	69.5 kN (15,618 lb.)		
	Lift Mode	76.7 kN (17,234 lb.)		
	Crowd Cylinder	44.0 kN (9,888 lb.)		
	Lift Mode	48.5 kN (10,911 lb.)		
	Swing Arc	180 deg.		
	Operator Control	2 levers		
			With Optional Extendable Dipperstick	
		With Standard Backhoe	*Retracted*	*Extended*
F	Loading Height, Truck Loading Position	3.97 m (13 ft. 0 in.)	4.01 m (13 ft. 2 in.)	4.72 m (15 ft. 6 in.)
G	Reach from Center of Swing Pivot	6.02 m (19 ft. 9 in.)	6.02 m (19 ft. 9 in.)	7.14 m (23 ft. 5 in.)
H	Reach from Center of Rear Axle	7.14 m (23 ft. 5 in.)	7.14 m (23 ft. 5 in.)	8.26 m (27 ft. 1 in.)
I	Digging Depth (SAE maximum)	4.85 m (15 ft. 11 in.)	4.85 m (15 ft. 11 in.)	6.01 m (19 ft. 9 in.)
J	Digging Depth (SAE)			
	610-mm (2 ft.) Flat Bottom	4.81 m (15 ft. 9 in.)	4.81 m (15 ft. 9 in.)	5.98 m (19 ft. 7 in.)
	2440-mm (8 ft.) Flat Bottom	4.49 m (14 ft. 9 in.)	4.49 m (14 ft. 9 in.)	5.75 m (18 ft. 10 in.)
K	Stabilizer Width, Transport, With Stabilizer Pads and No Guards	2.42 m (7 ft. 11 in.)	2.42 m (7 ft. 11 in.)	2.42 m (7 ft. 11 in.)
L	Stabilizer Spread, Operating	3.45 m (11 ft. 4 in.)	3.45 m (11 ft. 4 in.)	3.45 m (11 ft. 4 in.)
M	Stabilizer Overall Width, Operating	4.03 m (13 ft. 3 in.)	4.03 m (13 ft. 3 in.)	4.03 m (13 ft. 3 in.)
N	Bucket Rotation	190 deg.	190 deg.	190 deg.
O	Transport Height	3.91 m (12 ft. 10 in.)	3.91 m (12 ft. 10 in.)	3.91 m (12 ft. 10 in.)
Loader Dimensions and Performance *[see line art at left]*				
P	Bucket Dump Angle, Maximum	45 deg.		
Q	Rollback Angle at Ground Level	40 deg.		

410 P-TIER

While general information, pictures, and descriptions are provided, some illustrations and text may include product options and accessories NOT AVAILABLE in all regions, and in some countries products and accessories may require modifications or additions to ensure compliance with the local regulations of those countries.

Loader Dimensions and Performance *(continued) [see line art below]*	**410 P-TIER**		
	General-purpose	*General-purpose*	*Multipurpose*
Bucket Capacity	1.06 m^3 (1.39 cu. yd.)	1.15 m^3 (1.50 cu. yd.)	1.01 m^3 (1.32 cu. yd.)
Width	2346 mm (92 in.)	2394 mm (94 in.)	2346 mm (92 in.)
Weight	521 kg (1,148 lb.)	548 kg (1,208 lb.)	921 kg (2,030 lb.)
Breakout Force	47.4 kN (10,648 lb.)	46.0 kN (10,332 lb.)	43.3 kN (9,737 lb.)
Lift Capacity, Full Height	3463 kg (7,635 lb.)	3336 kg (7,355 lb.)	2914 kg (6,424 lb.)
R Height to Bucket Hinge Pin, Maximum	3.47 m (11 ft. 4 in.)	3.47 m (11 ft. 4 in.)	3.47 m (11 ft. 4 in.)
S Dump Clearance, Bucket at 45 deg.	2.70 m (8 ft. 10 in.)	2.66 m (8 ft. 9 in.)	2.67 m (8 ft. 9 in.)
T Reach at Full Height, Bucket at 45 deg.	785 mm (30.9 in.)	826 mm (32.5 in.)	826 mm (32.5 in.)
U Digging Depth Below Ground, Bucket Level	134 mm (5.3 in.)	134 mm (5.3 in.)	130 mm (5.1 in.)
V Length From Front Axle Centerline to Bucket Cutting Edge	2.03 m (6 ft. 8 in.)	2.09 m (6 ft. 10 in.)	2.08 m (6 ft. 10 in.)

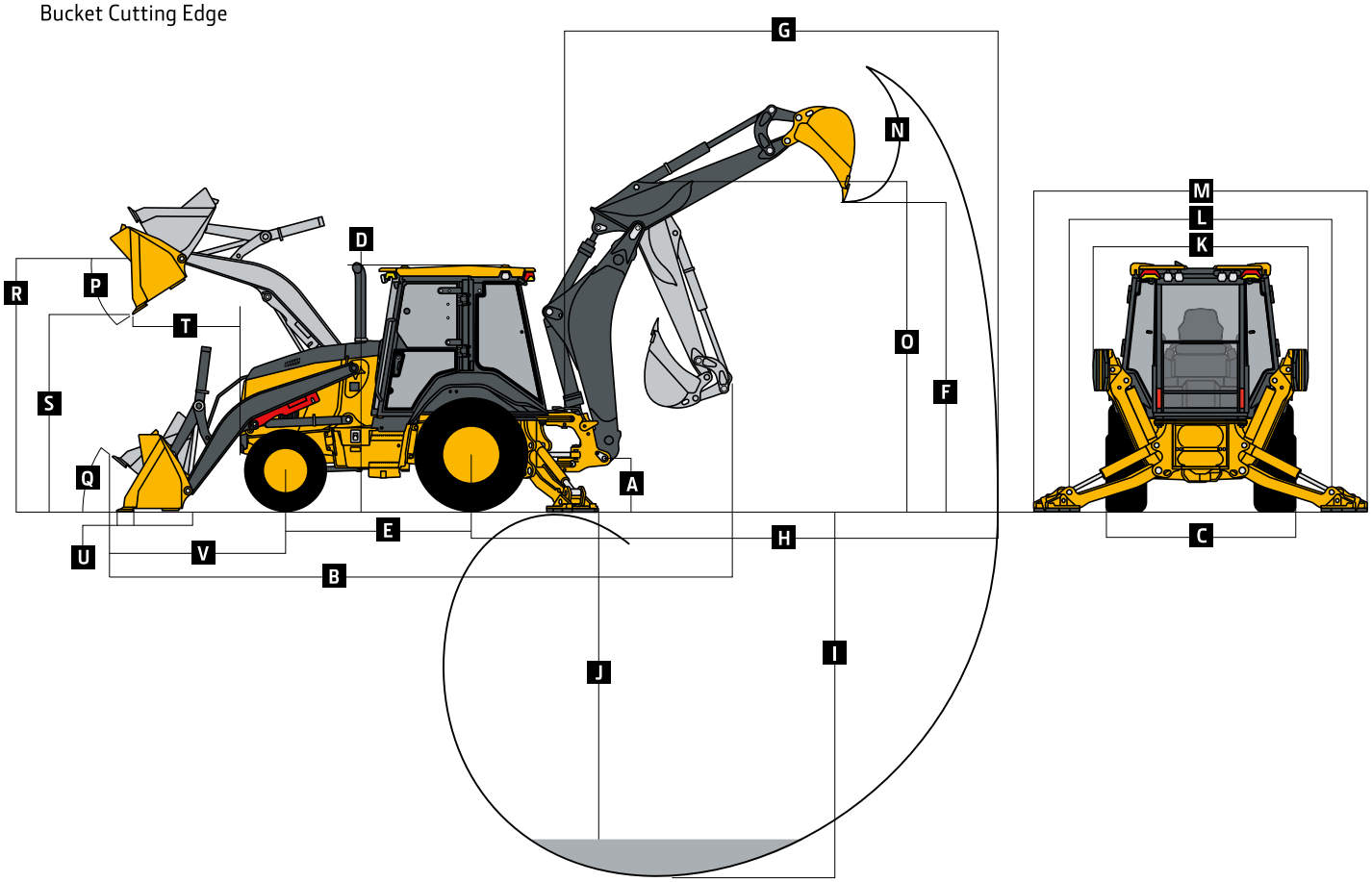

While general information, pictures, and descriptions are provided, some illustrations and text may include product options and accessories NOT AVAILABLE in all regions, and in some countries products and accessories may require modifications or additions to ensure compliance with the local regulations of those countries.

Lift Capacity With Quick-Coupler Forks *[see line art below center]*

	410 P-TIER	
Hydraulic Capacity	*1219-mm (48 in.) Tines*	*1524-mm (60 in.) Tines*
A[I] Maximum Height	2052 kg (4,524 lb.)	1902 kg (4,193 lb.)
B[I] Maximum Reach	3167 kg (6,982 lb.)	2995 kg (6,604 lb.)
C[I] At Ground Line	4123 kg (9,090 lb.)	3891 kg (8,578 lb.)
D[I] Below Ground Line	156 mm (6.2 in.)	156 mm (6.2 in.)

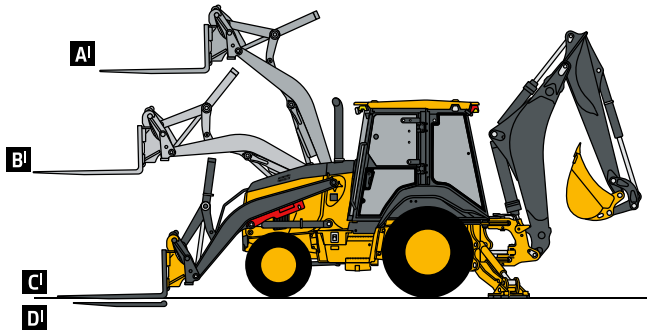

Lift Capacities *[see line art at right]*

Lift capacities are over-end values in kg (lb.). Figures listed are 100% of the maximum lift force available.

	With Standard Dipperstick		*With 1.21-m (4 ft. 0 in.) Extendable Dipperstick, Retracted*		*With 1.21-m (4 ft. 0 in.) Extendable Dipperstick, Extended*	
	Standard Lift	*Lift Mode*	*Standard Lift*	*Lift Mode*	*Standard Lift*	*Lift Mode*
A	7759 kg (17,107 lb.)	7759 kg (17,107 lb.)	7544 kg (16,632 lb.)	7544 kg (16,632 lb.)	4970 kg (10,957 lb.)	5355 kg (11,806 lb.)
B	6052 kg (13,342 lb.)	6052 kg (13,342 lb.)	5858 kg (12,915 lb.)	5858 kg (12,915 lb.)	3153 kg (6,952 lb.)	3505 kg (7,726 lb.)
C	4479 kg (9,875 lb.)	4479 kg (9,875 lb.)	4305 kg (9,491 lb.)	4305 kg (9,491 lb.)	2741 kg (6,043 lb.)	3049 kg (6,721 lb.)
D	4034 kg (8,893 lb.)	4034 kg (8,893 lb.)	3865 kg (8,520 lb.)	3865 kg (8,520 lb.)	2526 kg (5,569 lb.)	2811 kg (6,197 lb.)
E	3754 kg (8,276 lb.)	3909 kg (8,618 lb.)	3639 kg (8,023 lb.)	3741 kg (8,247 lb.)	2371 kg (5,226 lb.)	2639 kg (5,817 lb.)
F	3314 kg (7,306 lb.)	3672 kg (8,095 lb.)	3198 kg (7,051 lb.)	3556 kg (7,839 lb.)	2224 kg (4,904 lb.)	2477 kg (5,460 lb.)
G	1649 kg (3,636 lb.)	1836 kg (4,048 lb.)	1502 kg (3,312 lb.)	1689 kg (3,724 lb.)	2050 kg (4,519 lb.)	2284 kg (5,035 lb.)
H	2135 kg (4,707 lb.)	2384 kg (5,256 lb.)	1969 kg (4,340 lb.)	2218 kg (4,890 lb.)	1801 kg (3,970 lb.)	2009 kg (4,428 lb.)
I	2262 kg (4,988 lb.)	2530 kg (5,577 lb.)	2088 kg (4,604 lb.)	2355 kg (5,193 lb.)	1108 kg (2,442 lb.)	1251 kg (2,759 lb.)
J	2298 kg (5,066 lb.)	2572 kg (5,670 lb.)	2119 kg (4,671 lb.)	2393 kg (5,275 lb.)	1374 kg (3,030 lb.)	1553 kg (3,423 lb.)
K	2297 kg (5,063 lb.)	2573 kg (5,672 lb.)	2114 kg (4,660 lb.)	2390 kg (5,269 lb.)	1499 kg (3,305 lb.)	1695 kg (3,736 lb.)
L	2279 kg (5,024 lb.)	2555 kg (5,633 lb.)	2093 kg (4,614 lb.)	2369 kg (5,223 lb.)	1565 kg (3,450 lb.)	1770 kg (3,902 lb.)
M	2254 kg (4,969 lb.)	2529 kg (5,576 lb.)	2065 kg (4,552 lb.)	2340 kg (5,160 lb.)	1600 kg (3,527 lb.)	1811 kg (3,992 lb.)
N	2227 kg (4,909 lb.)	2501 kg (5,514 lb.)	2035 kg (4,487 lb.)	2309 kg (5,091 lb.)	1617 kg (3,566 lb.)	1832 kg (4,040 lb.)
O	2201 kg (4,852 lb.)	2474 kg (5,455 lb.)	2007 kg (4,424 lb.)	2280 kg (5,026 lb.)	1625 kg (3,582 lb.)	1842 kg (4,062 lb.)
P	2179 kg (4,804 lb.)	2452 kg (5,406 lb.)	1982 kg (4,369 lb.)	2255 kg (4,971 lb.)	1626 kg (3,585 lb.)	1846 kg (4,069 lb.)
Q	2165 kg (4,772 lb.)	2438 kg (5,375 lb.)	1964 kg (4,330 lb.)	2238 kg (4,933 lb.)	1625 kg (3,582 lb.)	1845 kg (4,069 lb.)
R	2163 kg (4,768 lb.)	2438 kg (5,375 lb.)	1958 kg (4,317 lb.)	2234 kg (4,925 lb.)	1622 kg (3,576 lb.)	1844 kg (4,066 lb.)
S	2184 kg (4,814 lb.)	2465 kg (5,434 lb.)	1974 kg (4,351 lb.)	2255 kg (4,971 lb.)	1620 kg (3,572 lb.)	1844 kg (4,066 lb.)
T	2260 kg (4,983 lb.)	2555 kg (5,632 lb.)	2041 kg (4,500 lb.)	2336 kg (5,150 lb.)	1622 kg (3,575 lb.)	1847 kg (4,072 lb.)
U	2594 kg (5,718 lb.)	2938 kg (6,478 lb.)	2349 kg (5,179 lb.)	2694 kg (5,939 lb.)	1628 kg (3,589 lb.)	1856 kg (4,092 lb.)
V	—	—	—	—	1643 kg (3,622 lb.)	1875 kg (4,135 lb.)
W	—	—	—	—	1674 kg (3,690 lb.)	1912 kg (4,216 lb.)
X	—	—	—	—	1735 kg (3,825 lb.)	1985 kg (4,376 lb.)
Y	—	—	—	—	1878 kg (4,140 lb.)	2151 kg (4,741 lb.)
Z	—	—	—	—	2511 kg (5,535 lb.)	2878 kg (6,345 lb.)

Lift capacities are over end with stabilizers down and tires tangent to ground.

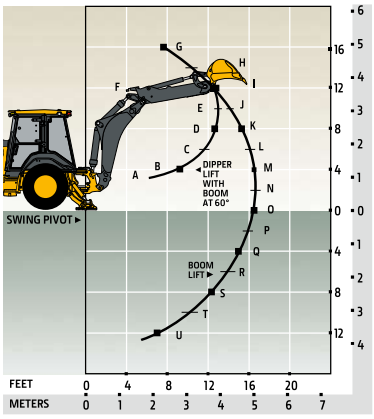

With Standard Dipperstick

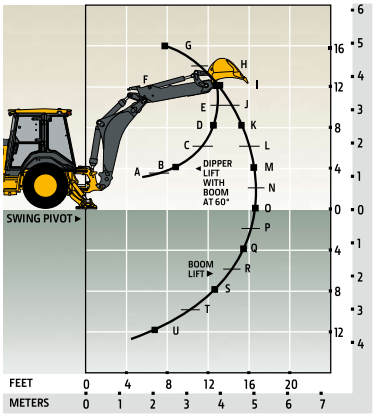

With Extendable Dipperstick, Retracted

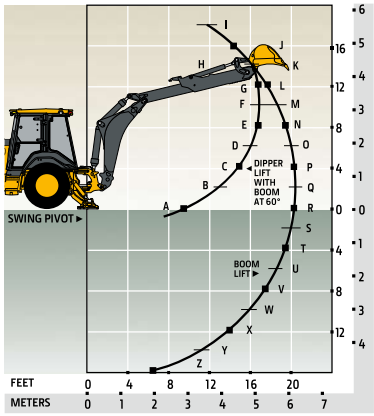

With Extendable Dipperstick, Extended

While general information, pictures, and descriptions are provided, some illustrations and text may include product options and accessories NOT AVAILABLE in all regions, and in some countries products and accessories may require modifications or additions to ensure compliance with the local regulations of those countries.

Net engine power is with standard equipment including air cleaner, exhaust system, alternator, and cooling fan at test conditions specified per ISO 9249. Specifications and design are subject to change without notice. Wherever applicable, specifications are in accordance with ISO standards. Except where otherwise noted, these specifications are based on a unit with 21L-24-in. 12PR (R4) tubeless rear and 12.5/80-18 10PR (R4) front tires, and 1.15-m³ (1.5 cu. yd.) loader bucket.



MB410PBU (25-06)

JOHN DEERE

JOHN DEERE | DOBBS EQUIPMENT

Florida Sheriffs Association, Bid FSA26-EQU24.0 Equipment

4x4 Loader Backhoe w/Cab & A/C (Standard Stick)

John Deere Model 310P, Loader Backhoe - Stated Options

Discount off MSRP List Price for Non-Specified Options = 25%

	Base Price
Central FL/South FL	**$118,105**
North FL/WestFL	**$120,715**

Option Code	Description	Sale Price
JD 310G	Credit to downgrade to John Deere model 310G backhoe	-$14,370
210G	Upgrade to 210G Box Blade BH Loader	$13,120
210P	Upgrade to 210P Box Blade BH Loader	$18,410
JD 320P	Upgrade to John Deere model 320P backhoe	$4,810
JD 410P	Upgrade to John Deere model 410P backhoe	$23,970
JD 710P	Upgrade to John Deere model 710P backhoe	$94,790
7028	Add pilot joystick rear controls w/ pattern selection	$2,396
7040	Add 3rd function loader hydraulics	$2,738
Level 2 Perf.	Add MFWD guard, HD grille, stabilizer & boom guard (310 - 410)	$2,190
BYT13521	Add 4 LED becon lights	$1,009
7001-1	Add auxiliary hydraulics, 1-way flow (310-410)	$2,343
7001-2	Add auxiliary hydraulics, 1-way flow (710)	$4,557
7002-1	Add auxiliary hydraulics, 1 & 2-way flow (310-410, requires pilot controls)	$6,235
7002-2	Add auxiliary hydraulics, 1 & 2-way flow (710)	$7,190
8025	Add 37" 4 tine thumb (310-410) requires 7002-1 aux hyd & pilot controls	$11,517
6752-1	Add extendible dipperstick (310-410)	$8,122
6752-2	Add extendible dipperstick (710)	$8,983
7041	Add front loader coupler, 3rd fcn. hyd. (310 - 410) requires 92" ldr bucket	$9,247
7702	Add manual rear quick coupler (310-410)	$1,383
7713	Add rear hydraulic quick coupler (320-410)	$7,287
7856	Add pin-on multi purpose bucket, 1.31 CU YD (requires 3rd fcn hyd)	$10,992
AT308139	Add 60x60 fork set for quick coupler	$5,056
952	Rear view camera	$2,699

310 P-Tier Backhoe Loader

22-Jul-2026

Code	Description	Qty	List Price
17B1T	310 P-Tier Backhoe Loader	1	$175,743.00
	17B1T (Gen-B) Ex-Works Dubuque, Iowa, U.S.A. As not all option codes have field kits, please review your order option codes and available kits prior to placing a machine order.		

Option Codes

0202	United States	1	No Added Cost
0351	Translated Text Labels Vehicle labels translated to selected language with English labels. Includes labels for operator station, engine and backhoe controls options.	1	No Added Cost
0259	English English language for operator’s manual and electronic content. Includes operator’s manual and 4G OM packet.	1	No Added Cost
0605	Level 1 Cab Includes: - Enclosed cab - Halogen work lights - Mechanical suspension seat	1	No Added Cost
0650	Less Performance Package	1	No Added Cost
0950	Less Vision System	1	No Added Cost
1200	Less Radio	1	($632.00)

Company Use

183N	JDLink™	1	No Added Cost
	Includes integrated cab wiring harness, antenna, and JDLink™ Modem's (MTG). JDLink™ connectivity is enabled separately through the JDLink™ website. Connectivity service is subject to country availability.		
3005	Powershift Transmission - Mechanical Front Wheel Drive (MFWD) with Limited Slip Differential	1	$3,290.00
	4F/2R powershift transmission A single electric transmission control lever is mounted on the left side of steering column (forward/neutral/reverse). Powershift configurations include gear up and down buttons integrated into the loader lever handle. Autoshift can be turned on/off from the sealed switch module. When autoshift is off, the transmission will operate as a powershift.		
4006	John Deere 4.5L - FT4/Stage IV	1	No Added Cost
	Net peak power of 100 Hp. For use only in areas where EPA final tier 4/EU stage IV is required. Turbocharged. Wet sleeve cylinder liners. 2 valves / cylinder. Electronically controlled HPCR fuel delivery system, B20 biodiesel compatible. Serpentine belt with automatic belt tensioner. Enclosed safety fan guard. Vertical spin-on engine oil filter. Spin-on fuel filter with water separator. Dual safety element dry-type air cleaner with evacuator valve. Underhood catalysts with vertical curved exhaust stack. Passive flow-through exhaust aftertreatment system with grid heater. Electronically controlled, variable-speed cooling fan.		
5245	Galaxy 19.5L-24 12PR Rear & 12.5/80-18 10PR Front	1	$492.00
	Requires axle code 3005. Rear tire chains require wheel spacers (AT347522).		
6152	Single Battery with Disconnect and Jump Post	1	No Added Cost
	175 minute reserve capacity (950 CCA) Recommended for use in ambient temperatures above 32 degrees F (0 degrees C).		
6751	Standard Dipperstick	1	No Added Cost
	Standard stabilizer legs; stabilizer overall width, operating: 11 ft. 7 in. (3.53 m.)		
6572	Heavy-Duty Bumper - For Machines without a Front Counterweight	1	$250.00
	Mounted to the lower section of the machine’s front (under the grille) for added protection when climbing piles or over rough terrain.		

Company Use

7000	No Auxiliary	1	No Added Cost
7026	Mechanical Controls, Two Lever, ISO (Deere)	1	No Added Cost
7037	Two-Function Loader Hydraulics, Single Lever	1	No Added Cost
	Single-lever control with horn, rear differential lock, electric clutch cutoff switch, and MFWD (momentary).Powershift configuration includes gear up, gear down.		
7806	24 in. (611 mm.) Heavy-Duty Bucket, 6.9 cu. ft. (0.20 cu. m.)	1	$2,373.00
	Pin-on bucket includes 5 teeth, TK-system Fanggs		
7700	Less Coupler - Less Thumb	1	No Added Cost
	If ordering with thumb, must order option code 7701.		
7870	86 in. (2.18 m.) General Purpose Bucket, 1.31 cu. yd. (1.00 cu. m.)	1	$4,869.00
	Pin-on bucket includes reversible bolt-on cutting edge and skid plates		
8096	Premium Mirrors - Exterior Rear View Mirrors (2) and Front View Mirror (1)	1	$207.00
Total			$186,592.00

Manufacturer's Suggested List Price shown. Retail prices may vary by dealer. Unless stated otherwise, taxes, freight, setup, delivery and other dealer specific charges not included in the pricing. Options/items noted with anything other than price will have additional costs. Pricing, availability, and specifications subject to change without notice. Special program pricing may be available on certain models. See dealer for details. Prices are shown in USD unless otherwise noted.

Company Use



310 P-Tier

Engine

Manufacturer - John Deere
Model - PowerTech™ EWL 4.5L turbocharged
Non-Road Emission Standards - EPA Final Tier 4/EU Stage IV
Cylinders - 4
Valves Per Cylinder - 2
Displacement - 276.0 cu in.
Bore and Stroke - 4.19 x 5.00 in.
Rated Speed - 2200.0 rpm
Gross Power At Rated Speed - 96.0 hp
Peak Power Speed - 1600.0 rpm
Gross Peak Power At Peak Power Speed - 102.0 hp
Peak Torque Speed - 1500.0 rpm
Gross Peak Torque At Peak Torque Speed - 344.0 lb-ft
Net Power At Rated Speed (ISO9249) - 94.0 hp
Net Peak Torque At Peak Torque Speed (ISO9249) - 338.0 lb-ft
Net Torque Rise - 51.0 %
Oil Specification - JD Torq-Gard or equivalent
Lubrication - Pressure system with spin-on filter and cooler
Fuel System - Level 34 electronic fuel system with Denso high pressure common rail
Air Cleaner - Dual stage dry type with safety element and evacuator valve

Cooling

Cooling

Fan Type - Electronically controlled, variable rate, suction type cooling fan, Standard
Engine Coolant Rating - -40.0 °F
Engine Radiator (Fins Per In.) - 10
Engine Oil Cooler Type - Oil-to-water
Hydraulic Cooler Type - Oil-to-air
Transmission Cooler Type - oil-to-water

Powertrain

Transmission Type - 4 speed, helical cut gears, full power-shifted transmission with hydraulic reverser standard; Electric clutch cutoff on loader lever
Number Of Gears Forward - 4
Number Of Gears Reverse - 2
Shift Control Type - Electric forward-neutral-reverse control lever with neutral start interlock
Torque Converter Type - Single stage, dual phase with 2.63:1 stall ratio
Torque Converter - 11.0 in.
Conditions For Measuring Travel Speeds - Power-Shift, Standard Transmission with Tire Size 19.5L-24 Rear Tires
Gear 1, Forward Maximum Speed - 3.4 mph
Gear 1, Reverse Maximum Speed - 4.2 mph
Gear 2, Forward Maximum Speed - 6.2 mph
Gear 2, Reverse Maximum Speed - 7.8 mph
Gear 3, Forward Maximum Speed - 12.6 mph
Gear 4, Forward Maximum Speed - 22.7 mph
Axle Oscillation Stop To Stop, Front Axle - 22.0 degree (angle)
Front Axle, Sae J43 Rating - 11000.0 lb.
Front Axle, Dynamic Rating - 19800.0 lb.
Front Axle, Static Rating - 54000.0 lb.
Front Axle, Ultimate Rating - 91500.0 lb.
Rear Axle, SAE J43 Rating - 13200.0 lb.
Rear Axle, Dynamic Rating - 22000.0 lb.
Rear Axle, Static Rating - 58400.0 lb.
Rear Axle, Ultimate Rating - 91500.0 lb.
Maximum Axle Torque - 46100.0 lb.
Mechanical Front Wheel Drive Axle Differential Type - Open - standard; automatic, limited-slip traction control – custom or optional

Powertrain

Rear Axle Differential Type - Foot actuated, hydraulically engaged 100% mechanical lock
Rear Differential Lock Pressure - 305.0 psi
Steering Type - Hydrostatic Power Steering and Emergency Steering (ISO 5010)
Steering Pressure - 3625.0 psi
Maximum Steer Angle, Mechanical Front-Wheel Drive (MFWD) Axle - 52.0 degree (angle)
Maximum Steer Angle, Non-Powered Front Axle - 55.0 degree (angle)
Curb-Turning Radius, With Brakes, With MFWD Axle - 11, 4 ft, in.
Curb-Turning Radius, With Brakes, With Non-Powered Front Axle - 11, 3 ft, in.
Curb-Turning Radius, Without Brakes, With MFWD Axle - 13, 0 ft, in.
Curb-Turning Radius, Without Brakes, With Non-Powered Front Axle - 12, 10 ft, in.
Bucket Clearance Circle, With Brakes, With MFWD Axle - 32, 4 ft, in.
Bucket Clearance Circle, With Brakes, With Non-Powered Front Axle - 32, 2 ft, in.
Bucket Clearance Circle, Without Brakes, With MFWD Axle - 34, 10 ft, in.
Bucket Clearance Circle, Without Brakes, With Non-Powered Front Axle - 34, 5 ft, in.
Number Of Steering Wheel Turns (Lock To Lock) With MFWD Axle - 2.7
Number Of Steering Wheel Turns (Lock To Lock) With Non-Powered Front Axle - 3.2
MFWD Axle Final Drives And Gears - Heavy duty, outboard planetary final drives distribute shock loads over 3 gears
MFWD Axle Total Ratio - 12.574:1 (14.759:1 optional with 12.5/80-18 front tires)
Rear Axle Final Drives And Gears - Heavy duty, outboard planetary final drives distribute shock loads over 3 gears
Rear Axle Total Ratio - 19.911:1
Brakes - Conform to ISO 3450
Service Brakes - Power assisted, hydraulic wet disc, mounted inboard, self adjusting and self equalizing
Service Brakes Friction Disc Area Per Side - 141900.0 mmByMm

Hydraulics

Hydraulics System Type - Open center system, single gear pump
Rated Rpm - 2200.0 rpm
Backhoe Pump Flow - 28.0 gpm
Loader Pump Flow - 28.0 gpm
Backhoe System Relief Pressure - 3625.0 psi
Loader System Relief Pressure - 3200.0 psi
Backhoe Controls - 2-lever mechanical standard, pilot control with pattern select and manual and/or electric auxiliary functions optional

Hydraulics

Loader Controls - Single-lever control with electric clutch cutoff switch standard; single-lever control with electric clutch cutoff switch, electrohydraulic (EH) proportional auxiliary roller, MFWD (momentary), and transmission quick-shift optional

Electrical

Voltage - 12.0 V

Number Of Batteries - 1.0

Battery Capacity (1 Battery) - 950.0 CCA

Reserve Capacity (1 Battery) - 175.0 min.

Alternator Rating - 145.0 amp

Lighting Options - 10 halogen: 4 front, 4 rear, and 2 side docking (32,500 candlepower each); turn signals and flashers: 2 front and 2 rear; stop and taillights; and 2 rear reflectors; factory installed option for 2 LED spot lights and 8 LED flood lights in lieu of the standard halogen light package

Operator Station

Operator Station Type - Canopy, isolation mounted, ROPS/FOPS, left/right access, with molded roof; optional quarter cab (front glass only) and fully enclosed cab

Monitoring

Alternator, Low Voltage - Indicator light, Audible

Service Code Indicator - Indicator light

Engine Air Filter Restriction - Indicator light, Audible, Digital

Engine Coolant Temperature - Indicator light, Audible, Gauge

Engine Oil Pressure - Indicator light, Audible

Fuel Level - Audible, Gauge, Digital

Hydraulic Oil Filter Restriction - Audible warning, Digital

Park Brake On/Off - Indicator light

Seat Belt Reminder - Indicator light

Stop Indicator - Indicator light, Audible

MFWD Active - Indicator light

Hydraulics Enabled - Indicator light

Engine Preheat - Indicator light, Digital

Aftertreatment Temperature High - Indicator light

Torque Converter Oil Temp - Indicator light, Audible, Gauge, Digital

Job Timer - Digital

Hourmeter - Digital

Monitoring

Engine Rpm - Digital
System Voltage - Digital
Machine Information And Configuration - Digital
Diesel-Exhaust Fluid (DEF) Level - Indicator light, Audible, Digital
Sight Gauges - Hydraulic Reservoir

Serviceability

Diagnostics - In-Cab Monitor Information
Refill Capacity Cooling System (Cab) - 29.1 qt
Refill Capacity Cooling System (Canopy) - 27.2 qt
Refill Capacity Rear Axle Differential Housing - 19.0 qt
Refill Capacity Engine Oil - 13.7 qt
Refill Capacity Torque Converter And Transmission - 16.0 qt
Refill Capacity Fuel Tank - 34.0 gal.
Refill Capacity Diesel-Exhaust Fluid (DEF) Tank - 3.6 gal.
Refill Capacity Hydraulic System - 33.5 gal.
Refill Capacity Hydraulic Reservoir - 11.9 gal.
Refill Capacity Mechanical Front-Wheel Drive Housing Axle - 6.9 qt
Refill Capacity Mechanical Front-Wheel Drive Housing Planetary Each - 1.0 qt

Operating Weights

Operator And Standard Equipment With Full Fuel Tank - 16217.0 lb.
Standard With Bumper - 14669.0 lb.
Typical With Cab, Extendible Dipperstick, And 405-Lb Counterweight - 15119.0 lb.
Cab - 580.0 lb.
Mechanical Front-Wheel Drive With Tires - 370.0 lb.
Extendable Dipperstick - 420.0 lb.
Front Loader Coupler - 566.0 lb.
Backhoe Bucket Coupler - 130.0 lb.

Lift Capacity with Quick-Coupler Forks

Hydraulic Capacity Minimum Tines - 48.0 in.
At Maximum Height With Minimum Tines - 3772.0 lb.
At Maximum Reach With Minimum Tines - 5931.0 lb.

Lift Capacity with Quick-Coupler Forks
At Ground Line With Minimum Tines - 7480.0 lb.
Below Ground Line With Minimum Tines - 7.3 in.
Rated Capacity Of Minimum Tines - 8598.0 lb.
Hydraulic Capacity Maximum Tines - 60.0 in.
At Maximum Height With Maximum Tines - 3510.0 lb.
At Maximum Reach With Maximum Tines - 5578.0 lb.
At Ground Line With Maximum Tines - 7061.0 lb.
Below Ground Line With Maximum Tines - 7.3 in.
Rated Capacity Of Maximum Tines - 8598.0 lb.

Riviera Beach - Utility Special District

To: Honorable Mayor, Chairperson and Board Members

From: Joshua Niemann, Utility Special District Executive Director

Through: William Wilkins, City Manager

Subject: **Resolution Number 78-26UD: A Resolution of the Board of Directors of the City of Riviera Beach Utility Special District, Palm Beach County, Florida, approving the purchase of one (1) Vac-Con Sewer Combination Cleaner Model VPD4215LA/1500 from SSES Inc. d/b/a Southern Sewer Equipment Sales utilizing Florida Sheriffs Association Cooperative Purchasing Program Contract No. FSA26-EQU24.0, Equipment, in an amount not to exceed $662,308.00; authorizing the Utility Special District Finance Director to make payments from Account Numbers 41131101-564000 and 41131104-564000 in an amount not to exceed $662,308.00; and providing an effective date.**

Date: November 23, 2026

CC: General Public

Background:

This purchase is critical to support the ongoing operation, maintenance, and emergency response activities of the Utility Special District's wastewater collection system and to ensure the reliable delivery of essential utility services to District customers. Through the use of the competitively awarded Florida Sheriffs Association Contract FSA26-EQU24.0, the District is able to procure one (1) Vac-Con Sewer Combination Cleaner Model VPD4215LA/1500 from Southern Sewer Equipment Sales, satisfying all competitive procurement requirements while obtaining specialized equipment designed specifically for sewer system maintenance and rehabilitation activities.

The Vac-Con Sewer Combination Cleaner is a critical piece of utility maintenance equipment that provides high-pressure sewer cleaning, vacuum debris removal, hydro-excavation, and wastewater system maintenance capabilities. The equipment combines a powerful vacuum

system, a 15-cubic-yard debris tank, a 1,500-gallon water system, hydro-excavation functionality, and sewer cleaning technology into a single unit capable of cleaning sewer mains, removing blockages, maintaining lift station infrastructure, exposing underground utilities, and responding to emergency collection system failures.

Maintaining a modern combination sewer cleaning vehicle is essential for proactive wastewater collection system maintenance, helping the District reduce sanitary sewer overflows, prevent blockages, improve system reliability, and maintain compliance with all Federal, State, and Local environmental regulations. The equipment will support routine cleaning programs, emergency response operations, hydro-excavation activities, lateral maintenance, and debris removal throughout the Utility Special District service area. These capabilities are critical to protecting public health, safeguarding environmental resources, and extending the useful life of the District's wastewater infrastructure.

City Goals:
The Citywide Goal is to Accelerate Operational Excellence.

Fiscal/Budget Impact:
$662,308.00

Recommendation:
Staff recommends a Motion to approve Resolution Number 78-26UD.

Attachments:
1. Resolution Number 78-26UD Southern Sewer.docx
2. Riviera Beach Vac-Con DEPD FSA quote 10-21-2026.pdf
3. Item 417 Vac-Con VPD4210SA1000 Options.pdf
4. FSA26-EQU24.0-Equipment-Final-Award-Packet.pdf
5. Vac-Con 417 VPD4210SA1000 Award Report (Oct 1, 2026).cleaned.pdf

Resolution Number 78-26UD

A Resolution of the Board of Directors of the City of Riviera Beach Utility Special District, Palm Beach County, Florida, approving the purchase of one (1) Vac-Con Sewer Combination Cleaner Model VPD4215LA/1500 from SSES Inc. d/b/a Southern Sewer Equipment Sales utilizing Florida Sheriffs Association Cooperative Purchasing Program Contract No. FSA26-EQU24.0, Equipment, in an amount not to exceed $662,308.00; authorizing the Utility Special District Finance Director to make payments from Account Numbers 41131101-564000 and 41131104-564000 in an amount not to exceed $662,308.00; and providing an effective date.

Whereas, the City of Riviera Beach Utility Special District ("District") requires one (1) Vac-Con Sewer Combination Cleaner Model VPD4215LA/1500 to support wastewater collection system operations, sewer cleaning, hydro-excavation, and maintenance activities throughout the District's service area; and

Whereas, Section 16.5-261 (Cooperative purchasing authorized) of the City of Riviera Beach Procurement Code authorizes the Procurement Department to participate in a cooperative purchasing agreement for the procurement of supplies, services, or construction with one or more public procurement units; and

Whereas, the Florida Sheriffs Association ("FSA"), through its Cooperative Purchasing Program, issued a competitive Invitation to Bid for equipment, advertised on March 30, 2026, and awarded Contract No. FSA26-EQU24.0, Equipment, for a term of October 1, 2026, through September 30, 2028; and

Whereas, SSES Inc. d/b/a Southern Sewer Equipment Sales is an awarded vendor under FSA Contract No. FSA26-EQU24.0 for Vac-Con combination sewer cleaning and vacuum equipment, and the contract pricing and terms are available to Florida local governments; and

Whereas, purchasing through a competitively awarded cooperative purchasing contract allows the District to obtain the required equipment at established contract pricing while promoting efficiency and economy in the procurement process; and

Whereas, funding for this purchase is available in Account Numbers 41131101-564000 and 41131104-564000; and

Whereas, the Board of Directors finds that this purchase at established contract pricing under FSA Contract No. FSA26-EQU24.0 is in the best interest of the District and its customers.

Whereas, this Resolution shall take effect upon approval by the Utility Special District Board.

Now, Therefore, be it resolved by the City of Riviera Beach Utility Special District Board of Directors, Palm Beach County, Florida, as follows:

Section 1. The Board of Directors hereby approves the purchase of one (1) Vac-Con Sewer Combination Cleaner Model VPD4215LA/1500 from SSES Inc. d/b/a Southern Sewer Equipment Sales, utilizing FSA Contract No. FSA26-EQU24.0, Equipment, in an amount not to exceed $662,308.00.

Section 2. The Utility Special District Finance Director is hereby authorized to make payments to SSES Inc. d/b/a Southern Sewer Equipment Sales from Account Numbers 41131101-564000 and 41131104-564000 in an amount not to exceed $662,308.00.

Section 3. This Resolution shall take effect immediately upon its passage and approval by the Board of Directors of the City of Riviera Beach Utility Special District.

Passed and Adopted this _____ day of _____, 2026.

APPROVED:

_____
Glen Spiritis, Ph.D
Chairperson

_____
Fercella Davis-Panier
Vice-Chairperson

ATTEST:

_____
Debrah Hall
Master Municipal Clerk
District Clerk

MOTIONED BY: _____

SECONDED BY: _____

B. GUYTON: ____

K. MILLER-ANDERSON: ____

S. LANIER: ____

G. SPIRITIS: ____

F. DAVIS-PANIER:

Reviewed as to Legal Sufficiency

_____
Dawn S. Wynn, District Attorney

Date: _____

Southern Sewer

Mr. Joseph Jackson, Jr.
City of Riviera Beach
600 W. Blue Heron Blvd.
Riviera Beach, FL 33404
Email: JJackson@rivierabeach.org

October 21, 2026

Dear Mr. Jackson:

Southern Sewer Equipment Sales is pleased to announce the opportunity for the City of Riviera Beach to purchase a new Vac-Con Sewer Combination Cleaner Body and Chassis from the Florida Sheriff's Contract No. FSA26-EQU24.0, Specification #417.

The base Vac-Con model on Specification #417 includes the following items:

New Vac-Con Sewer Combination Cleaner Model VPD4210SA/1000
Standard Equipment Includes:
827 Positive Displacement Blower, Rated at 4200 CFM @ 18 Inches of Mercury
Diffuser/Muffler
Cyclone Separator with Cleanout Box
Hydrostatic Vacuum Drive
10 Cubic Yard, 1/4" Corten Steel Debris Tank
Flat Style Rear Door with Hydraulic Door Locks – Including Open/Close
Internal Polyethylene Float Device with External Indicator
5" Butterfly Drain Valve with 10' Lay Flat Hose
Debris Tank Dumping: Minimum 50 degrees, Hydraulic Telescopic Lift Cylinder - Power Up/Power Down
Hinge Type Permanently Mounted Debris Body Prop
Debris Body Flushout – 8 Jets
Automatic Vacuum Breaker with Float Arm Assembly and Overfill Protection
Behind Cab Boom Support and Docking Station at Front Bumper
Vacuum Relief Valves
8" Vacuum Intake Hose
6' Aluminum Telescoping Hydraulic Boom with Clean Out, 270 Degree Rotation and Joystick Controls
Pendant Control
Engine and Hose Reel Controls
Two (2) Emergency Stop Button Locations: Operator Station and Mid-Body
Front Mounted Articulating Hose Reel 800' x 1" Capacity, Hydraulic Power
Hose Reel Speed Control, Hydraulic Locks
400' x 1" 2500 PSI Rated Hose

1,000 Gallon Capacity Cross-Linked Polyethylene Water Tanks
Curbside Fill
Sight Gauge to Indicate Water Level
Water Tank Drain – ¼ Turn Ball Valve
Water Pump: 80 GPM @ 2,500 PSI
Water Pump Remote Oil Drain – Quick Disconnects
High-Pressure Relief Valves
Water Pump Drive: Gas Auxiliary Engine
Auxiliary Engine Remote Oil Drain with Quick Disconnects
Dual Roller Level Wind
Manual Hose Rewind Guide
Flexible Hose Guide (Tiger Tail)
10' Leader Hose
20 GPM at 750 PSI Wash Down Hand Gun with 25' of Hose, Nozzle, Relief Valve & Hose Storage Rack
Sealed and Locking Toolbox
1) each Sanitary (15 degree) and Penetrator (30 degree) nozzles
20.5' x 8" Aluminum Intake Tubes (1-3', 1-5', 1-6', and 1-6.5' nozzle)
ICC LED lighting
Polyurethane Paint
Vac-Con Manual
12 Month Standard Warranty
5 lb. Fire Extinguisher
1) Set of Triangles

Base Bid Price: $383,042.00

Published Options:

Debris Body Options	
Upgrade to 15 Yard Debris Tank	$29,755.00
6" Knife Valve with Center Post and Handle, in lieu of 5" Butterfly Valve	$1,188.00
Rear Splash Guard Tank Mounted 2-10 o'clock Position	$4,271.00
Boom Options	
10' Telescoping Boom Assembly with Pendant Control Station (Tube in Tube), *Replaces 6' Telescoping Boom Assembly*	$7,382.00
Tungsten Infused Carbide Boom Elbow and Reducer	$6,967.00
Hose Reel Options	
CREDIT: 600' x 1" Hose Reel Capacity	-$2,329.00
Reel Power Level Wind Guide	$8,192.00
Hose Footage Counter	$937.00
Water System Options	
80 GPM @ 2,000 PSI Water System	No Charge

Upgrade to 1500 Gallon Water Capacity	$17,660.00
50’ Capacity Retractable Hand Gun Hose Reel with 50’ Hose	$3,315.00
Hydro Excavation Package: 50' Retractable Hose Reel with 50' x 1/2" High Pressure Hose, Heavy Duty High Pressure Unloader Valve, Main Control Ball Valve & 72" x 1/2" Lance with Single Forward Spray Nozzle	$10,394.00
Lateral Cleaning Kit with 200’x1/2” Hose and Nozzle; Permanently mounted, electronically controlled	$9,505.00
Variable Flow Water System (includes 2 additional nozzles)	$1,281.00
Lighting Options	
3) LED Flood Lights with Limb Guards, Set of 2; Locations – Boom, Mid-body & Rear	$3,567.00
2) LED Strobe Lights with Limb Guards, Locations: Rear Debris Tank & 1) Mirror	$2,998.00
Handheld LED Spotlight	$970.00
DOT LED Arrow Board	$10,563.00
4 Corner LED Strobe System: 2) Front Bumper, 2) Rear Frame	$3,091.00
Electrical Options	
Body Load Limit Alarm, Level Indicator	$1,104.00
Rear Camera System with Color Monitor (includes 1 camera)	$2,924.00
Additional Camera: Front Hose Reel	$892.00
Low Water Alarm with Light	$822.00
Wireless Remote Control	$7,509.00
Miscellaneous Machine Options	
Cone Storage Rach, Hinged Style	$1,211.00
Rear Mounted Tow Hooks	$572.00
Remote Boom Grease Zerk Assembly	$3,861.00
Remote Debris Tank Grease Zerk Assembly	$4,160.00
Grease Assembly for Articulating Hose Reel	$1,783.00
Nozzle Rack	$193.00
Pipe/Tool Storage	
Single Pipe Rack	$304.00
2) Folding Pipe Racks, Tank Mounted, Curbside & Rear Door	$9,394.00
2) Aluminum Tool Boxes, 8”x14”x6”, front mount	$1,426.00
Upgrade Storage Box Behind Cab to Aluminum	$4,426.00
2) 5’x8” Aluminum Extension Tubes with Quick Clamps	$1,054.00
8” Adjustable Air Gap with Quick Clamp	$897.00
Non-scheduled Options: *(includes 1% discount)*	
12v Auxiliary Hydraulic System for Boom Function	$4,907.00
6 Way Pendant Control Station	$822.00
New Freightliner 114SD Plus Chassis, 66,000 GVW Tandem, Cummins L9 370 HP Diesel Engine, Allison 3000 Automatic Transmission	$138,798.00
Discount	($27,500.00)
TOTAL PRICE	**662,308.00***

Final Model after Options: VPD4215LA/1500

**This quote is valid for 30 days.*

The City may consider the following additional option:
Upgrade to John Deere 4 cylinder diesel auxiliary engine in lieu of gas engine $55,291.00

We appreciate the opportunity to provide this equipment to the City of Riviera Beach. Please feel free to contact Jordyn Brock at (772) 882-8931, if you have any questions.

Sincerely,

Meagon Brown

Sales Coordinator

Southern Sewer
800-782-4134 www.southernsewer.com

FSA26-EQU24.0 Equipment

Item #417 Sewer Cleaner: Combination Sewer Cleaning/Vacuum Machine Body - 10 Cubic Yd.

Vac-Con VPD4210SA/1000

OPTIONS

includes 1% discount

Vacuum System Options

Description		*Option Price*
Credit: 824 Positive Displacement Blower 3600 CFM, in lieu of 827 Positive Displacement Blower	$	(4,903.00)

Debris Body Options

Description		*Option Price*
Upgrade to 12 Yard Debris Tank	$	5,486.00
Upgrade to 15 Yard Debris Tank *(includes upgrade to 1300 gallon water capacity)*	$	29,755.00
6" Knife Valve with Center Post and Handle, in lieu of 5" Butterfly Valve	$	1,188.00
6" Knife Valve, Lower Rear Door Mounted with Camlock	$	3,255.00
Gravity Drain System: Plumbing to Gate Valve at Mid-Passenger Side of Unit, Allowing Return of Liquids to Manhole	$	3,043.00
Rear Splash Guard Tank Mounted 2-10 o'clock Position	$	4,271.00
200 GPM Hydraulic Pump Off System with 20' Lay Flat Hose, Rear Mounted	$	12,793.00
575 GPM Hydraulic Pump Off System with 20' Lay Flat Hose, Rear Mounted	$	21,932.00
Stainless Steel Float Ball on Body Level Indicator	$	392.00

Boom Options

Description		*Option Price*
10' Telescoping Boom Assembly with Pendant Control Station (Tube in Tube), *Replaces 6' Telescoping Boom Assembly*	$	7,382.00
Tungsten Infused Carbide Boom Elbow & Reducer	$	6,967.00

Hose Reel Options

Description		*Option Price*
Credit: 600' x 1" Hose Reel Capacity	$	(2,329.00)
PRO Reel: Articulating to driver's and curb side, includes 12VDC Auxiliary Hydraulic pump, 7" Digital Display, Flood Light in Front of Reel, Advanced Controls with Dual Joysticks, Digital Debris Tank Level Gauge, Digital Hose Footage Counter, Digital Water Level Gauge, One Touch Remote Transfer Case Engagement, Planetary Drive Motor (Pay Out/Retrieve), Remote Grease Assembly for Reel, Sewer Guidance System with Front/Rear Camera and Monitor in Cab, Vacuum Suction Indicator *(Dual engine configuration requires transfer case option)*	$	13,770.00
"Reel Power" Level Wind Guide	$	8,192.00

Hose Footage Counter	$	937.00
Electro Magnet for Outrigger Leg	$	7,871.00
500' Hose in lieu of 400'	$	721.00
600' Hose in lieu of 400'	$	1,440.00

Auxiliary Engine Options

Description		*Option Price*
Upgrade to Diesel Auxiliary Engine 4 Cylinder	$	59,726.00
Upgrade to Diesel Auxiliary Engine 6 Cylinder	$	99,213.00
Transfer Case Vacuum Drive	$	21,680.00
Single Engine Configuration Hydrostatic Drive Unit, Removes Auxiliary Engine		*No Charge*

Water System Options

Description		*Option Price*
50 GPM @ 3,000 PSI Water System with 400' x 3/4" Hose		*No Charge*
60 GPM @ 2,000 PSI Water System		*No Charge*
80 GPM @ 2,000 Psi Water System		*No Charge*
Upgrade to 1300 Gallon Water Capacity	$	11,401.00
Upgrade to 1500 Gallon Water Capacity	$	17,660.00
50' Capacity Retractable Hand Gun Hose Reel with 50' Hose	$	3,315.00
100' Capacity Retractable Hand Gun Hose Reel with 100' Hose	$	5,827.00
Hydro Excavation Package: 50' Retractable Hose Reel with 50' x 1/2" High Pressure Hose, Heavy Duty High Pressure Unloader Valve, Main Control Ball Valve & 72" x 1/2" Lance with Single Forward Spray Nozzle	$	10,394.00
Chemical Tank, 15 Gallon Capacity	$	5,092.00
Lateral Cleaning Kit with 150' x 1/2" Hose and Nozzle; Dolly Style Mounts	$	5,152.00
Lateral Cleaning Kit with 200' x 1/2" Hose and Nozzle; Permanently Mounted, Electronically Controlled	$	9,505.00
Pre-Tank Water Filter (Y Type)	$	1,510.00
Variable Flow water system *(Includes 2 Additional Nozzles)*	$	1,281.00

Lighting Options

Description		*Option Price*
LED Flood Lights with Limb Guards, Set of 2 - Specify Location	$	1,189.00
LED Flood Light with Limb Guard, Single Light - Specify Location	$	787.00
LED Beacon Strobe Light with Limb Guard, Each - Specify Location	$	1,499.00
Hand Held LED Spotlight	$	970.00
LED Arrow Stick	$	4,552.00
LED Arrow Board	$	6,025.00
DOT LED Arrow Board	$	10,563.00
4 Corner LED Strobe System: 2 on Front Bumper, 2 on Rear Frame	$	3,091.00
LED Strobe Lights, Frame Mounted Mid-Body, Set of 2	$	1,569.00

Southern Sewer
800-782-4134 www.southernsewer.com

Electrical Options

Description		*Option Price*
Body Load Limit Alarm, Level Indicator	$	1,104.00
Rear Axle Load Limit Alarm	$	1,497.00
Rear Camera System with Color Monitor *(includes 1 camera)*	$	2,924.00
Additional Cameras *(Requires Camera System)* , Each	$	892.00
Low Water Alarm with Light	$	822.00
Advanced Controls: Dual Electronic Joystick Controllers, LCD Operator Screen, Electronic Footage Counter and Single Ball Valve for Rodder Hose	$	8,776.00
Wireless Remote Control	$	7,509.00

Miscellaneous Machine Options

Description		*Option Price*
Cone Storage Rack	$	674.00
Cone Storage Rack, Hinged Style	$	1,211.00
Grate Lifting Hook	$	824.00
Long Handle Storage, Rear of Mainframe	$	817.00
Rear Mounted Tow Hooks	$	572.00
Remote Boom Grease Zerk Assembly	$	3,861.00
Remote Debris Tank Grease Zerk Assembly	$	4,160.00
Grease Assembly for Articulating Hose Reel	$	1,783.00
Nozzle Rack	$	193.00

Pipe/Tool Storage

Description		*Option Price*
Single Pipe Rack	$	304.00
Folding Pipe Rack, Tank Mounted	$	4,697.00
Lazy Susan Pipe Rack *(subject to space availability)*	$	4,151.00
Vertical Pipe Rack	$	906.00
2) Aluminum Tool Boxes, 8" x 14" x 6", Front Mount	$	1,426.00
Upgrade Storage Box Behind Cab to Aluminum	$	4,426.00
2) Roll Out Shelves for Storage Box Behind Cab	$	2,578.00
Steel Nozzle Toolbox, 16" x 18" x 30"	$	2,865.00
Upgrade Nozzle Toolbox to Aluminum	$	1,195.00
5' x 8" Aluminum Extension Tube with Quick Clamp	$	527.00
6' x 8" Aluminum Extension Tube with Quick Clamp	$	586.00
8" Adjustable Air Gap with Quick Clamp	$	897.00

Paint

Description		*Option Price*
Reflective Striping Other Than White or Blue	$	1,113.00

FSA Cooperative Purchasing Program



FSA26-EQU24.0: Equipment Contract Packet

PROTECTING, LEADING & UNITING SINCE 1893
FLORIDA SHERIFFS ASSOCIATION
2617 Mahan Drive
Tallahassee, Florida 32308
p: (850) 877-2165 f: (850) 878-8665
flsheriffs.org

NOTICE OF FINAL AWARD
CONTRACT FSA26-EQU24.0: Equipment

Date: October 1, 2026

To: All Prospective Bidders and Purchasers

From: Matt Dunagan, Executive Director
Sarrah Carroll, Deputy Executive Director of Administration
Megan Taber, Director of the Cooperative Purchasing Program

Re: Contract Number FSA26-EQU24.0 – Equipment: Contract Awards

We are pleased to announce that the Florida Sheriffs Association (FSA) has successfully completed its latest nationwide cooperative bid for equipment. This contract is in effect beginning October 1, 2026, through September 30, 2028.

This notification is for the Florida Sheriffs Association (FSA) Cooperative Purchasing Program (CPP) Notice of Final Award for contract FSA26-EQU24.0 Equipment. All bids were received promptly, reviewed, and evaluated by the FSA and its Fleet Advisory Committee.

The contract specifications include:

- All Terrain & Utility Vehicles: All Terrain Vehicles (Quad)
- All Terrain & Utility Vehicles: Electric Utility Vehicles (Side-by-Side)
- All Terrain & Utility Vehicles: Utility Vehicles (Side-by-Side)
- Blower: Ride On Blower*
- Bulldozer: 180hp
- Bulldozer: 70hp
- Bulldozer: 90hp
- Chipper: Brush Chipper
- Compactor: 80,000 lbs. Landfill Compactor
- Compressor: Air Compressor - Trailer Mounted
- Dump Truck: Articulating Off Road Dump Truck - 50,000 lbs. Payload
- Excavator: All Terrain Walking Excavator
- Excavator: Hydraulic Excavator - 15,590 lbs. Operating Weight
- Excavator: Hydraulic Excavator - 38,000 lbs. Operating Weight
- Excavator: Hydraulic Excavator - 76,550 lbs. Operating Weight

- Excavator: Mini Hydraulic Excavator - 7,105 lbs. Operating Weight
- Excavator: Telescopic Excavator - 45,000 lbs. Operating Weight - Tracked Type
- Excavator: Telescopic Excavator - 47,000 lbs. Operating Weight - 6x6 Wheeled Type
- Excavator: Vacuum Excavator - Trailer Mounted
- Excavator: Vacuum Excavator Body, Truck Mounted - 12 cubic yd.*
- Excavator: Wheeled Hydraulic Excavator - 42,000 lbs. Operating Weight
- Forklift: Cushion Tire - 4,000 lbs. Capacity
- Forklift: Rough Terrain Forklift - 5,000 lbs. Capacity
- Forklift: Telescopic Tool Carrier/Telehandler
- Generator: 125kW Stationary
- Generator: 150kW Mobile
- Generator: 500kW Mobile
- Generator: 500kW Stationary
- Generator: 60kW Stationary
- Horizontal Directional Drill
- Leaf Collector: Trailer Mounted
- Lift: Articulated Boom Lift - Self Propelled Tracked*
- Lift: Scissor Lift - Self Propelled
- Light Tower: Hybrid Light Tower
- Light Tower: Light Tower - Trailer Mounted
- Loader: Loader Backhoe - 4x4
- Loader: Mini Skid Steer - 1,000 lbs. Operating Capacity - Tracked Type, Stand Up Operator*
- Loader: Skid Steer - 1,850 lbs. Operating Capacity - Wheeled Type
- Loader: Skid Steer - 2,800 lbs. Operating Capacity - Wheeled Type
- Loader: Skid Steer - 3,100 lbs. Operating Capacity - Tracked Type
- Loader: Wheel Loader - 1.5 cubic yd.
- Loader: Wheel Loader - 3.0 cubic yd.
- Loader: Wheel Loader - 5.75 cubic yd.
- Low Speed Vehicle: Electric Type
- Motor Grader: Large
- Motor Grader: Small
- Mower: 15ft. Flex Wing Rotary Mower
- Mower: Remote Controlled Brush Mower
- Mower: Zero Turn Radius Mower
- Pallet Jack: Electric 4,500 lbs. Capacity
- Pipe Inspection: Battery Operated Pipe Crawler Inspection System
- Pipe Inspection: External Power Pipe Crawler Inspection System*
- Portable Signal: Portable Signal - Trailer Mounted*
- Pump: Mobile Pump
- Roadway Advisory Board: Message Board/Automatic License Plate Reader*
- Roadway Advisory Board: Mobile Message Board
- Roadway Advisory Board: Mobile Speed Board
- Roadway Advisory Board: Mobile Speed Board/Automatic License Plate Reader

- Roadway Advisory Board: Mobile Traffic Advisory/Directional Signal Board
- Roller: Compact 2,900 lbs. - Double Drum Roller - 38in. Width*
- Roller: Compact, Pneumatic Asphalt Roller*
- Roller: Compaction Roller 15,000 lbs. - Single Drum
- Roller: Large 22,000 lbs. - Double Drum Roller - 70in. Width
- Roller: Small 5,400 lbs. - Double Drum Roller - 47in. Width
- Security Camera: Security Camera Tower - Trailer Mounted*
- Sewer Cleaner: Combination Sewer Cleaning/Vacuum Machine Body - 10 cubic yd.
- Sewer Cleaner: Easement Machine*
- Sewer Cleaner: Trailer Mounted Sewer Cleaner
- Shop Tools & Equipment
- Shredder: Mobile Shredder/Grinder
- Simulator System: Equipment Operator Simulator*
- Solid Waste Material Handler: Wheeled Type
- Stump Cutter
- Sweeper: 3-Wheel Mechanical or Regenerative Air Sweeper
- Sweeper: Compact Air Sweeper - 2.3 cubic yd.
- Sweeper: Mechanical Broom Street Sweeper
- Sweeper: Regenerative Air Street Sweeper
- Sweeper: Self-Propelled Hydrostatic Broom
- Sweeper: Vacuum Street Sweeper*
- Sweeper: Walk Behind Floor Sweeper/Scrubber*
- Tactical Vehicle: Skid Steer Mounted (The Rook)
- Tool Carrier: Hydrostatic Drive
- Tractor: Agriculture Tractor - 4x2
- Tractor: Compact Articulating Tractor - AWD
- Tractor: Small Agriculture Tractor - 4x4
- Tractor: Tractor with Boom Mower - 4x4
- Trailer: Container Chassis Trailer - 73,900 lbs. GVWR*
- Trailer: Deck Over Equipment Trailer - 40,000 lbs. GVWR
- Trailer: Deck Over Flatbed Trailer - 14,000 lbs. GVWR
- Trailer: Detachable Neck Lowboy Trailer - 100,000 lbs. GVWR
- Trailer: Enclosed Cargo Trailer - 7,000 lbs. GVWR
- Trailer: Fixed Neck Lowboy Trailer - 70,000 lbs. GVWR
- Trailer: Flatbed Tilt Trailer - 40,000 lbs. GVWR*
- Trailer: Hydraulic Drop Deck Trailer - 13,500 lbs. GVWR
- Trailer: Hydraulic Tail Trailer - 70,000 lbs. GVWR
- Trailer: Leachate Tanker - 6,500 gallons
- Trailer: Livestock Trailer - 7,000 lbs. GVWR
- Trailer: Mobile Fuel Trailer - 460 gallons*
- Trailer: Multi Tank Fuel/Service 880 gallons Non-Hazmat - 14,000 lbs. GVWR*
- Trailer: Pothole Patch Unit - 12,000 lbs. GVWR*
- Trailer: Pressure/Vacuum Trailer - 6,000 gallons*

- Trailer: Pull Behind Dump Trailer - 14,000 lbs. GVWR
- Trailer: Refrigeration/Freezer Trailer - 7,000 lbs. GVWR
- Trailer: Restroom Trailer ADA Compliant*
- Trailer: Sludge Trailer - 80,000 lbs. GVWR*
- Trailer: Utility/Equipment Trailer - 7,000 lbs. GVWR
- Trailer: Waste Trailer with Walking Floor
- Transfer Switch: 600 Amp Automatic Transfer Switch
- Trencher: Tractor Type*
- Trencher: Walk Behind Trencher
- Underground Locating Equipment: Ground Penetrating Radar
- Underground Locating Equipment: Utility Locator
- Vehicle Lift: Above Ground - 2 Post Asymmetric Stationary Vehicle Lift 10k
- Vehicle Lift: Above Ground - 2 Post Symmetric Stationary Vehicle Lift 12k
- Vehicle Lift: Above Ground - 2 Post Symmetric Stationary Vehicle Lift 15k
- Vehicle Lift: Above Ground - 2 Post Symmetric Stationary Vehicle Lift 18k
- Vehicle Lift: Above Ground - 2 Post Versymmetric Stationary Vehicle Lift 10k
- Vehicle Lift: Above Ground - 4 Column, Alignment Lift with Front/Rear Jacks and Integrated Turntables and Slip Plates 14k
- Vehicle Lift: Above Ground - 4 Post Alignment Lift with Turnplates and Rolling Jack 30k*
- Vehicle Lift: Above Ground Drive On Platform Lift, Pantograph Type*
- Vehicle Lift: In Ground Drive On Platform Lift, Scissor Type*
- Vehicle Lift: Mobile - 2 Column, Cabled
- Vehicle Lift: Mobile - 2 Column, Wireless
- Vehicle Lift: Mobile - 4 Column, Cabled
- Vehicle Lift: Mobile - 4 Column, Wireless
- Vehicle Lift: Mobile - 6 Column, Cabled
- Vehicle Lift: Mobile - 6 Column, Wireless
- Vehicle Lift: Mobile - 8 Column, Wireless

**New Item Group*

The competitive process for this award began in March 2026, when the FSA Fleet Advisory Committee, bidders, and stakeholders provided input regarding procurement needs. Specifications were developed based on prior activity, and new additions were included based on feedback from the FSA Committee, bidders, and stakeholders.

Advertisements of the Invitation to Bid (ITB) were placed on the FSA website on March 30, 2026, and within the Florida Administrative Register on March 30, 2026, and April 27, 2026.

From the ITB, 117 bidders completed the pre-bid process or submitted required FSA waivers. Of these respondents, 83 submitted bids. Seventy-one responsive bidders were awarded after bids were evaluated by the FSA Fleet Advisory Committee and FSA staff.

The Florida Sheriffs Association Cooperative Purchasing Program has followed the Contract Terms and Conditions to procure this contract.

Contract prices are extended and guaranteed to any local government or political subdivision of the state, public educational institutions, other public agencies or authorities with the State of Florida, and other entities approved by the manufacturer to participate in this contract.

Out-of-state sales are permitted under this contract. All purchasers are bound by their local governing purchasing ordinances, rules, and regulations.

All awarded vendors are governed by their manufacturer agreements and the Contract Terms and Conditions.

List of Intended Awards in Alphabetical Order:

1. ACF Industrial Energy
2. Alamo Group Ag Americas LLC
3. Alamo Group Municipal Mowing Solutions LLC
4. All Traffic Solutions, LLC (A TAPCO Brand)
5. Alta Construction Equipment Florida, LLC
6. American Signal Company
7. Ameri-Recreational Sports, LLC
8. Aramsco Inc
9. ARI Phoenix, Inc.
10. ARIENS COMPANY
11. BASIC Equipment
12. BBA Pumps, Inc.
13. Container Systems & Equipment Co., Inc.
14. Cowin Equipment Company
15. Creel Tractor Company
16. Croc Enterprises LLC
17. DELAND MOTORSPORTS
18. DeLand Truck Center, Inc.
19. Dobbs Equipment, LLC
20. Doosan Bobcat North America, Inc.
21. Emergency Standby Power, LLC
22. Environmental Products Group
23. Everglades Equipment Group
24. Evervac Equipment
25. Federal Contracts LLC DBA Federal Contracts Company
26. Florida Coast Equipment, Inc.
27. GenServe LLC
28. GREAT SOUTHERN EQUIPMENT, LLC
29. Green Thumb Palm Beach
30. HD CONSTRUCTION EQUIPMENT DEVELON NORTH AMERICA LLC

31. Humdinger Equipment, Ltd.
32. Innovative Equipment Services 2 LLC CASE Power & Equipment of Florida
33. Jet-Vac Equipment Company, LLC
34. JOBBERS EQUIPMENT WAREHOUSE INC
35. K&K Systems, Inc.
36. Kelly Tractor Co
37. KJF Equipment Services LLC
38. Kustom Signals, Inc.
39. Love Power Equipment, Inc
40. McKibben Powersports Inc.
41. Menzi Muck USA, Inc.
42. Mersino Dewatering LLC
43. MID-FLORIDA DIESEL INC
44. MowerMax Equipment Co.
45. MWI Corporation
46. National Equipment Dealers, LLC
47. National Lift Truck Service
48. Nationwide Haul LLC
49. OCALA TRACTOR, LCC
50. OMJC Signal Inc
51. Opifex-Synergy
52. Pantropic Power
53. Pat`s Pump & Blower
54. Rechtien International Trucks
55. RIGHT TRAILERS, INC.
56. Ring Power Corporation
57. Segway of Central Florida
58. Southern Sewer Equipment Sales
59. Southern States ToyotaLift
60. Sunbelt Waste Equipment LLC
61. Taylor Power Systems, Inc.
62. Texas Trailers Sales and Service
63. Texas Underground
64. Thompson Pump & Manufacturing Company Inc.
65. Tom Evans Environmental, Inc.
66. Tradewinds Power Corp.
67. TRAVIS BODY & TRAILER INC
68. Vermeer Southeast Sales
69. Vetted Security Solutions
70. WARREN EQUIPMENT, INC
71. Xylem Dewatering Solutions, Inc.

The final award page document for all awarded bid items is attached.

FSA Cooperative Purchasing Program

FSA26-EQU24.0: Equipment
Awarded Vendor Contract Signature Pages

Docusign Envelope ID: 44808330-36FF-8E9E-801D-2D591BF3953C

CONTRACT SIGNATURE FORM

By submitting a response to this Invitation to Bid and signing this form, the Bidder declares that he or she has read, and the company understands, accepts and will comply with the terms, conditions and specifications of this bid and any addenda issued. The failure or omission to review this document shall in no way relieve the authorized agent of obligations with respect to this bid. The submission of a bid and signature below shall be taken as evidence of acceptance of the terms and conditions of this bid.

The Bidder further declares that no other persons other than the authorized agent herein named has any interest in this bid or in the contract to be taken, and that it is made without any connection with any other person or persons making proposal for the same article, and is in all respects fair and without collusion or fraud.

The Bidder further declares that they have carefully examined the specifications and is thoroughly familiar with its provisions and with the quality, type and grade of materials required.

The Bidder further declares that they have provided a discount on all factory options included in this bid, and such discount will be included in all purchase orders.

The Bidder further declares that the company understands the financial responsibility associated with this bid as stated and further declares that it has the ability to meet the financial responsibility associated with this bid.

The Bidder further declares that the company will furnish the items awarded for the price bid.

FSA Contract Number: FSA26-EQU24.0 Equipment

Bidder Company Name: ACF Industrial Energy

Business Address: 9311 Solar Drive, Tampa, FL 33619

Name of Authorized Agent: David A. Voelker

Email address of authorized agent: d.voelker@ACFPower.com

Signature: Signed by: 01E2DF0EFBE84AC...

Date: 9/24/2026

Docusign Envelope ID: 61808C7E-AFF6-8740-828B-58FEB772D365

CONTRACT SIGNATURE FORM

By submitting a response to this Invitation to Bid and signing this form, the Bidder declares that he or she has read, and the company understands, accepts and will comply with the terms, conditions and specifications of this bid and any addenda issued. The failure or omission to review this document shall in no way relieve the authorized agent of obligations with respect to this bid. The submission of a bid and signature below shall be taken as evidence of acceptance of the terms and conditions of this bid.

The Bidder further declares that no other persons other than the authorized agent herein named has any interest in this bid or in the contract to be taken, and that it is made without any connection with any other person or persons making proposal for the same article, and is in all respects fair and without collusion or fraud.

The Bidder further declares that they have carefully examined the specifications and is thoroughly familiar with its provisions and with the quality, type and grade of materials required.

The Bidder further declares that they have provided a discount on all factory options included in this bid, and such discount will be included in all purchase orders.

The Bidder further declares that the company understands the financial responsibility associated with this bid as stated and further declares that it has the ability to meet the financial responsibility associated with this bid.

The Bidder further declares that the company will furnish the items awarded for the price bid.

FSA Contract Number: FSA26-EQU24.0 Equipment

Bidder Company Name: Alamo Group Ag Americas LLC

Business Address: 2501 Griffin Avenue, Selma, AL 36703

Name of Authorized Agent: Marc Ivey

Email address of authorized agent: marc.ivey@alamo-group.com

Signature: DocuSigned by: 0B2E625F3BAD413...

Date: 9/29/2026

Docusign Envelope ID: 78EFCC6B-DCEC-877D-83B1-DEBBD2AFB282

CONTRACT SIGNATURE FORM

By submitting a response to this Invitation to Bid and signing this form, the Bidder declares that he or she has read, and the company understands, accepts and will comply with the terms, conditions and specifications of this bid and any addenda issued. The failure or omission to review this document shall in no way relieve the authorized agent of obligations with respect to this bid. The submission of a bid and signature below shall be taken as evidence of acceptance of the terms and conditions of this bid.

The Bidder further declares that no other persons other than the authorized agent herein named has any interest in this bid or in the contract to be taken, and that it is made without any connection with any other person or persons making proposal for the same article, and is in all respects fair and without collusion or fraud.

The Bidder further declares that they have carefully examined the specifications and is thoroughly familiar with its provisions and with the quality, type and grade of materials required.

The Bidder further declares that they have provided a discount on all factory options included in this bid, and such discount will be included in all purchase orders.

The Bidder further declares that the company understands the financial responsibility associated with this bid as stated and further declares that it has the ability to meet the financial responsibility associated with this bid.

The Bidder further declares that the company will furnish the items awarded for the price bid.

FSA Contract Number: FSA26-EQU24.0 Equipment

Bidder Company Name: Alamo Group Municipal Mowing Solutions LLC

Business Address: 1627 E. Walnut St., Seguin, TX 78155

Name of Authorized Agent: Coryelle Smith

Email address of authorized agent: bids@alamo-group.com

Signature: Signed by: Coryelle Smith ACAA9E5581274E8...

Date: 9/23/2026

Docusign Envelope ID: 3C894A56-9713-89CD-8341-9654970CF0E6

CONTRACT SIGNATURE FORM

By submitting a response to this Invitation to Bid and signing this form, the Bidder declares that he or she has read, and the company understands, accepts and will comply with the terms, conditions and specifications of this bid and any addenda issued. The failure or omission to review this document shall in no way relieve the authorized agent of obligations with respect to this bid. The submission of a bid and signature below shall be taken as evidence of acceptance of the terms and conditions of this bid.

The Bidder further declares that no other persons other than the authorized agent herein named has any interest in this bid or in the contract to be taken, and that it is made without any connection with any other person or persons making proposal for the same article, and is in all respects fair and without collusion or fraud.

The Bidder further declares that they have carefully examined the specifications and is thoroughly familiar with its provisions and with the quality, type and grade of materials required.

The Bidder further declares that they have provided a discount on all factory options included in this bid, and such discount will be included in all purchase orders.

The Bidder further declares that the company understands the financial responsibility associated with this bid as stated and further declares that it has the ability to meet the financial responsibility associated with this bid.

The Bidder further declares that the company will furnish the items awarded for the price bid.

FSA Contract Number: FSA26-EQU24.0 Equipment

Bidder Company Name: All Traffic Solutions, LLC (A TAPCO Brand)

Business Address: 5100 W Brown Deer Rd, Brown Deer, WI 53223

Name of Authorized Agent: John Kuehn

Email address of authorized agent: john.kuehn@tapconet.com

Signature: Signed by: John Kuehn 885B10211ED3498...

Date: 9/30/2026

Docusign Envelope ID: 3D961225-9F88-8200-837B-BA2D7FB5F547

CONTRACT SIGNATURE FORM

By submitting a response to this Invitation to Bid and signing this form, the Bidder declares that he or she has read, and the company understands, accepts and will comply with the terms, conditions and specifications of this bid and any addenda issued. The failure or omission to review this document shall in no way relieve the authorized agent of obligations with respect to this bid. The submission of a bid and signature below shall be taken as evidence of acceptance of the terms and conditions of this bid.

The Bidder further declares that no other persons other than the authorized agent herein named has any interest in this bid or in the contract to be taken, and that it is made without any connection with any other person or persons making proposal for the same article, and is in all respects fair and without collusion or fraud.

The Bidder further declares that they have carefully examined the specifications and is thoroughly familiar with its provisions and with the quality, type and grade of materials required.

The Bidder further declares that they have provided a discount on all factory options included in this bid, and such discount will be included in all purchase orders.

The Bidder further declares that the company understands the financial responsibility associated with this bid as stated and further declares that it has the ability to meet the financial responsibility associated with this bid.

The Bidder further declares that the company will furnish the items awarded for the price bid.

FSA Contract Number: FSA26-EQU24.0 Equipment

Bidder Company Name: Alta Construction Equipment Florida LLC

Business Address: 8418 Palm River Road Tampa, FL 33611

Name of Authorized Agent: Kevin Gray

Email address of authorized agent: kevin.gray@altg.com

Signature: DocuSigned by: 7BD4053B25164B2...

Date: 9/25/2026

Docusign Envelope ID: 1704D84E-6C46-8CAA-833C-F0998550288D

CONTRACT SIGNATURE FORM

By submitting a response to this Invitation to Bid and signing this form, the Bidder declares that he or she has read, and the company understands, accepts and will comply with the terms, conditions and specifications of this bid and any addenda issued. The failure or omission to review this document shall in no way relieve the authorized agent of obligations with respect to this bid. The submission of a bid and signature below shall be taken as evidence of acceptance of the terms and conditions of this bid.

The Bidder further declares that no other persons other than the authorized agent herein named has any interest in this bid or in the contract to be taken, and that it is made without any connection with any other person or persons making proposal for the same article, and is in all respects fair and without collusion or fraud.

The Bidder further declares that they have carefully examined the specifications and is thoroughly familiar with its provisions and with the quality, type and grade of materials required.

The Bidder further declares that they have provided a discount on all factory options included in this bid, and such discount will be included in all purchase orders.

The Bidder further declares that the company understands the financial responsibility associated with this bid as stated and further declares that it has the ability to meet the financial responsibility associated with this bid.

The Bidder further declares that the company will furnish the items awarded for the price bid.

FSA Contract Number: FSA26-EQU24.0 Equipment

Bidder Company Name: American Signal Company

Business Address: 2755 Bankers Industrial DR. Atlanta, GA 30360

Name of Authorized Agent: Seth Johnson

Email address of authorized agent: sjohnson@amsig.com

Signature: Signed by: Seth Johnson D321ECC2DF2C4C7...

Date: 9/24/2026

Docusign Envelope ID: 71C8E99F-0A6D-825E-83CD-4E8C211C83A1

CONTRACT SIGNATURE FORM

By submitting a response to this Invitation to Bid and signing this form, the Bidder declares that he or she has read, and the company understands, accepts and will comply with the terms, conditions and specifications of this bid and any addenda issued. The failure or omission to review this document shall in no way relieve the authorized agent of obligations with respect to this bid. The submission of a bid and signature below shall be taken as evidence of acceptance of the terms and conditions of this bid.

The Bidder further declares that no other persons other than the authorized agent herein named has any interest in this bid or in the contract to be taken, and that it is made without any connection with any other person or persons making proposal for the same article, and is in all respects fair and without collusion or fraud.

The Bidder further declares that they have carefully examined the specifications and is thoroughly familiar with its provisions and with the quality, type and grade of materials required.

The Bidder further declares that they have provided a discount on all factory options included in this bid, and such discount will be included in all purchase orders.

The Bidder further declares that the company understands the financial responsibility associated with this bid as stated and further declares that it has the ability to meet the financial responsibility associated with this bid.

The Bidder further declares that the company will furnish the items awarded for the price bid.

FSA Contract Number: FSA26-EQU24.0 Equipment

Bidder Company Name: ARS Power Sports

Business Address: 1319 Hwy 70 E Okeechobee, FL 34972

Name of Authorized Agent: Phillip Woerner

Email address of authorized agent: phillipw@arspowersports.com

Signature: Signed by: Phillip Woerner A9C3DDC3C55F4D3...

Date: 9/23/2026

Docusign Envelope ID: 8A263833-B573-8D90-80C9-EFC7DCBE14B5

CONTRACT SIGNATURE FORM

By submitting a response to this Invitation to Bid and signing this form, the Bidder declares that he or she has read, and the company understands, accepts and will comply with the terms, conditions and specifications of this bid and any addenda issued. The failure or omission to review this document shall in no way relieve the authorized agent of obligations with respect to this bid. The submission of a bid and signature below shall be taken as evidence of acceptance of the terms and conditions of this bid.

The Bidder further declares that no other persons other than the authorized agent herein named has any interest in this bid or in the contract to be taken, and that it is made without any connection with any other person or persons making proposal for the same article, and is in all respects fair and without collusion or fraud.

The Bidder further declares that they have carefully examined the specifications and is thoroughly familiar with its provisions and with the quality, type and grade of materials required.

The Bidder further declares that they have provided a discount on all factory options included in this bid, and such discount will be included in all purchase orders.

The Bidder further declares that the company understands the financial responsibility associated with this bid as stated and further declares that it has the ability to meet the financial responsibility associated with this bid.

The Bidder further declares that the company will furnish the items awarded for the price bid.

FSA Contract Number: FSA26-EQU24.0 Equipment

Bidder Company Name: Aramsco, Inc.

Business Address: 5 Radnor Corporate Center, 100 Matsonford Road, Suite 510, Radnor, PA 19087

Name of Authorized Agent: Kate Moll-Taylor

Email address of authorized agent: kmolltaylor@aramsco.com

Signature: DocuSigned by: Kate Moll-Taylor 1E1D2A7A1EFD411...

Date: 9/24/2026

Docusign Envelope ID: 401F0EB6-CCA9-8C27-81C9-2CD03E580420

CONTRACT SIGNATURE FORM

By submitting a response to this Invitation to Bid and signing this form, the Bidder declares that he or she has read, and the company understands, accepts and will comply with the terms, conditions and specifications of this bid and any addenda issued. The failure or omission to review this document shall in no way relieve the authorized agent of obligations with respect to this bid. The submission of a bid and signature below shall be taken as evidence of acceptance of the terms and conditions of this bid.

The Bidder further declares that no other persons other than the authorized agent herein named has any interest in this bid or in the contract to be taken, and that it is made without any connection with any other person or persons making proposal for the same article, and is in all respects fair and without collusion or fraud.

The Bidder further declares that they have carefully examined the specifications and is thoroughly familiar with its provisions and with the quality, type and grade of materials required.

The Bidder further declares that they have provided a discount on all factory options included in this bid, and such discount will be included in all purchase orders.

The Bidder further declares that the company understands the financial responsibility associated with this bid as stated and further declares that it has the ability to meet the financial responsibility associated with this bid.

The Bidder further declares that the company will furnish the items awarded for the price bid.

FSA Contract Number: FSA26-EQU24.0 Equipment

Bidder Company Name: ARI Phoenix, Inc. dba ARI-HETRA

Business Address: 11163 Woodward Lane, Sharonville OH 45241

Name of Authorized Agent: Tekla Goodwin

Email address of authorized agent: teklagoodwin@ari-hetra.com

Signature: DocuSigned by: Tekla Goodwin 6DE0263E856E453...

Date: 9/23/2026

Docusign Envelope ID: A215833C-42FF-819C-8311-A6A73D6DEF79

CONTRACT SIGNATURE FORM

By submitting a response to this Invitation to Bid and signing this form, the Bidder declares that he or she has read, and the company understands, accepts and will comply with the terms, conditions and specifications of this bid and any addenda issued. The failure or omission to review this document shall in no way relieve the authorized agent of obligations with respect to this bid. The submission of a bid and signature below shall be taken as evidence of acceptance of the terms and conditions of this bid.

The Bidder further declares that no other persons other than the authorized agent herein named has any interest in this bid or in the contract to be taken, and that it is made without any connection with any other person or persons making proposal for the same article, and is in all respects fair and without collusion or fraud.

The Bidder further declares that they have carefully examined the specifications and is thoroughly familiar with its provisions and with the quality, type and grade of materials required.

The Bidder further declares that they have provided a discount on all factory options included in this bid, and such discount will be included in all purchase orders.

The Bidder further declares that the company understands the financial responsibility associated with this bid as stated and further declares that it has the ability to meet the financial responsibility associated with this bid.

The Bidder further declares that the company will furnish the items awarded for the price bid.

FSA Contract Number: FSA26-EQU24.0 Equipment

Bidder Company Name: Ariens Company (Gravely)

Business Address: 655 West Ryan Street, Brillion, WI 54110

Name of Authorized Agent: Tyler Walimaa

Email address of authorized agent: twalimaa@ariensco.com

Signature: DocuSigned by: Tyler Walimaa 74B7B427FF174CC...

Date: 9/23/2026

Docusign Envelope ID: CB3189C9-A5D5-887B-83F0-138D659AAFF8

CONTRACT SIGNATURE FORM

By submitting a response to this Invitation to Bid and signing this form, the Bidder declares that he or she has read, and the company understands, accepts and will comply with the terms, conditions and specifications of this bid and any addenda issued. The failure or omission to review this document shall in no way relieve the authorized agent of obligations with respect to this bid. The submission of a bid and signature below shall be taken as evidence of acceptance of the terms and conditions of this bid.

The Bidder further declares that no other persons other than the authorized agent herein named has any interest in this bid or in the contract to be taken, and that it is made without any connection with any other person or persons making proposal for the same article, and is in all respects fair and without collusion or fraud.

The Bidder further declares that they have carefully examined the specifications and is thoroughly familiar with its provisions and with the quality, type and grade of materials required.

The Bidder further declares that they have provided a discount on all factory options included in this bid, and such discount will be included in all purchase orders.

The Bidder further declares that the company understands the financial responsibility associated with this bid as stated and further declares that it has the ability to meet the financial responsibility associated with this bid.

The Bidder further declares that the company will furnish the items awarded for the price bid.

FSA Contract Number: FSA26-EQU24.0 Equipment

Bidder Company Name: BBA Pumps, Inc.

Business Address: 7222 B Cross Park Drive, North Charleston, SC 29418

Name of Authorized Agent: Justin Booth

Email address of authorized agent: jbooth@bbapumps.com

Signature: DocuSigned by: Justin Booth 6C57BFE7803942E...

Date: 9/28/2026

Docusign Envelope ID: A4D9A855-032C-80DA-82DF-76A25B66B8BA

CONTRACT SIGNATURE FORM

By submitting a response to this Invitation to Bid and signing this form, the Bidder declares that he or she has read, and the company understands, accepts and will comply with the terms, conditions and specifications of this bid and any addenda issued. The failure or omission to review this document shall in no way relieve the authorized agent of obligations with respect to this bid. The submission of a bid and signature below shall be taken as evidence of acceptance of the terms and conditions of this bid.

The Bidder further declares that no other persons other than the authorized agent herein named has any interest in this bid or in the contract to be taken, and that it is made without any connection with any other person or persons making proposal for the same article, and is in all respects fair and without collusion or fraud.

The Bidder further declares that they have carefully examined the specifications and is thoroughly familiar with its provisions and with the quality, type and grade of materials required.

The Bidder further declares that they have provided a discount on all factory options included in this bid, and such discount will be included in all purchase orders.

The Bidder further declares that the company understands the financial responsibility associated with this bid as stated and further declares that it has the ability to meet the financial responsibility associated with this bid.

The Bidder further declares that the company will furnish the items awarded for the price bid.

FSA Contract Number: FSA26-EQU24.0 Equipment

Bidder Company Name: Container Systems & Equipment Co., Inc.

Business Address: 506 Bellevue Avenue., Daytona Beach, FL 32114

Name of Authorized Agent: William Young

Email address of authorized agent: byoung@containersys.com

Signature: Signed by: William Young 55E2D5B724E54AD...

Date: 9/23/2026

Docusign Envelope ID: 1D5C0BE9-5649-8BFA-839F-F05F51FA625E

CONTRACT SIGNATURE FORM

By submitting a response to this Invitation to Bid and signing this form, the Bidder declares that he or she has read, and the company understands, accepts and will comply with the terms, conditions and specifications of this bid and any addenda issued. The failure or omission to review this document shall in no way relieve the authorized agent of obligations with respect to this bid. The submission of a bid and signature below shall be taken as evidence of acceptance of the terms and conditions of this bid.

The Bidder further declares that no other persons other than the authorized agent herein named has any interest in this bid or in the contract to be taken, and that it is made without any connection with any other person or persons making proposal for the same article, and is in all respects fair and without collusion or fraud.

The Bidder further declares that they have carefully examined the specifications and is thoroughly familiar with its provisions and with the quality, type and grade of materials required.

The Bidder further declares that they have provided a discount on all factory options included in this bid, and such discount will be included in all purchase orders.

The Bidder further declares that the company understands the financial responsibility associated with this bid as stated and further declares that it has the ability to meet the financial responsibility associated with this bid.

The Bidder further declares that the company will furnish the items awarded for the price bid.

FSA Contract Number: FSA26-EQU24.0 Equipment

Bidder Company Name: Cowin Equipment Company Inc

Business Address: 7950 Pittman Avenue, Pensacola Fl. 32534

Name of Authorized Agent: John Edwards

Email address of authorized agent: jedwards@cowin.com

Signature: Signed by: John Edwards F4EC8488C5644A8...

Date: 9/23/2026

Docusign Envelope ID: 7CEA0B64-79C1-8C2B-8204-3364BE6F4D76

CONTRACT SIGNATURE FORM

By submitting a response to this Invitation to Bid and signing this form, the Bidder declares that he or she has read, and the company understands, accepts and will comply with the terms, conditions and specifications of this bid and any addenda issued. The failure or omission to review this document shall in no way relieve the authorized agent of obligations with respect to this bid. The submission of a bid and signature below shall be taken as evidence of acceptance of the terms and conditions of this bid.

The Bidder further declares that no other persons other than the authorized agent herein named has any interest in this bid or in the contract to be taken, and that it is made without any connection with any other person or persons making proposal for the same article, and is in all respects fair and without collusion or fraud.

The Bidder further declares that they have carefully examined the specifications and is thoroughly familiar with its provisions and with the quality, type and grade of materials required.

The Bidder further declares that they have provided a discount on all factory options included in this bid, and such discount will be included in all purchase orders.

The Bidder further declares that the company understands the financial responsibility associated with this bid as stated and further declares that it has the ability to meet the financial responsibility associated with this bid.

The Bidder further declares that the company will furnish the items awarded for the price bid.

FSA Contract Number: FSA26-EQU24.0 Equipment

Bidder Company Name: Creel Tractor Company

Business Address: 3771 Palm Beach Blvd Fort Myers, FL 33916

Name of Authorized Agent: Brian Creel

Email address of authorized agent: brian@creeltractor.com

Signature: DocuSigned by: Brian Creel 5D10747940BC41A...

Date: 9/23/2026

Docusign Envelope ID: 4E0124E3-470D-8792-83EA-FF7CD1F42C1E

CONTRACT SIGNATURE FORM

By submitting a response to this Invitation to Bid and signing this form, the Bidder declares that he or she has read, and the company understands, accepts and will comply with the terms, conditions and specifications of this bid and any addenda issued. The failure or omission to review this document shall in no way relieve the authorized agent of obligations with respect to this bid. The submission of a bid and signature below shall be taken as evidence of acceptance of the terms and conditions of this bid.

The Bidder further declares that no other persons other than the authorized agent herein named has any interest in this bid or in the contract to be taken, and that it is made without any connection with any other person or persons making proposal for the same article, and is in all respects fair and without collusion or fraud.

The Bidder further declares that they have carefully examined the specifications and is thoroughly familiar with its provisions and with the quality, type and grade of materials required.

The Bidder further declares that they have provided a discount on all factory options included in this bid, and such discount will be included in all purchase orders.

The Bidder further declares that the company understands the financial responsibility associated with this bid as stated and further declares that it has the ability to meet the financial responsibility associated with this bid.

The Bidder further declares that the company will furnish the items awarded for the price bid.

FSA Contract Number: FSA26-EQU24.0 Equipment

Bidder Company Name: Croc Enterprises, LLC dba Croc Crash Solutions

Business Address: 2989 SE Monroe St, Stuart, FL 34997

Name of Authorized Agent: Mike Caffrey

Email address of authorized agent: mike@wearecroc.com

Signature: Signed by: Mike Caffrey 68CA9787FEFD4DB...

Date: 9/23/2026

Docusign Envelope ID: B588A7AF-2207-8C9D-81A7-64AEBCC6845A

CONTRACT SIGNATURE FORM

By submitting a response to this Invitation to Bid and signing this form, the Bidder declares that he or she has read, and the company understands, accepts and will comply with the terms, conditions and specifications of this bid and any addenda issued. The failure or omission to review this document shall in no way relieve the authorized agent of obligations with respect to this bid. The submission of a bid and signature below shall be taken as evidence of acceptance of the terms and conditions of this bid.

The Bidder further declares that no other persons other than the authorized agent herein named has any interest in this bid or in the contract to be taken, and that it is made without any connection with any other person or persons making proposal for the same article, and is in all respects fair and without collusion or fraud.

The Bidder further declares that they have carefully examined the specifications and is thoroughly familiar with its provisions and with the quality, type and grade of materials required.

The Bidder further declares that they have provided a discount on all factory options included in this bid, and such discount will be included in all purchase orders.

The Bidder further declares that the company understands the financial responsibility associated with this bid as stated and further declares that it has the ability to meet the financial responsibility associated with this bid.

The Bidder further declares that the company will furnish the items awarded for the price bid.

FSA Contract Number: FSA26-EQU24.0 Equipment

Bidder Company Name: DeLand Truck Center, inc.

Business Address: 1208 South Woodland Blvd. DeLand,Fl 32720

Name of Authorized Agent: Howard Williams

Email address of authorized agent: howardwilliams@cfl.rr.com

Signature: Signed by: Howard Williams A538AF2AA03F479...

Date: 9/23/2026

Docusign Envelope ID: 2F880501-A183-86C7-8154-493D297E6C27

CONTRACT SIGNATURE FORM

By submitting a response to this Invitation to Bid and signing this form, the Bidder declares that he or she has read, and the company understands, accepts and will comply with the terms, conditions and specifications of this bid and any addenda issued. The failure or omission to review this document shall in no way relieve the authorized agent of obligations with respect to this bid. The submission of a bid and signature below shall be taken as evidence of acceptance of the terms and conditions of this bid.

The Bidder further declares that no other persons other than the authorized agent herein named has any interest in this bid or in the contract to be taken, and that it is made without any connection with any other person or persons making proposal for the same article, and is in all respects fair and without collusion or fraud.

The Bidder further declares that they have carefully examined the specifications and is thoroughly familiar with its provisions and with the quality, type and grade of materials required.

The Bidder further declares that they have provided a discount on all factory options included in this bid, and such discount will be included in all purchase orders.

The Bidder further declares that the company understands the financial responsibility associated with this bid as stated and further declares that it has the ability to meet the financial responsibility associated with this bid.

The Bidder further declares that the company will furnish the items awarded for the price bid.

FSA Contract Number: FSA26-EQU24.0 Equipment

Bidder Company Name: Dobbs Equipment, LLC

Business Address: 2730 S. Falkenburg Rd. Riverview FL, 33578

Name of Authorized Agent: Peter Richa

Email address of authorized agent: Peter.Richa@dobbsequipment.com

Signature: Signed by: Peter Richa B96D423D0D8D4B7...

Date: 9/25/2026

Docusign Envelope ID: 1DA09016-3319-8315-80FD-D91ABC59BBDF

CONTRACT SIGNATURE FORM

By submitting a response to this Invitation to Bid and signing this form, the Bidder declares that he or she has read, and the company understands, accepts and will comply with the terms, conditions and specifications of this bid and any addenda issued. The failure or omission to review this document shall in no way relieve the authorized agent of obligations with respect to this bid. The submission of a bid and signature below shall be taken as evidence of acceptance of the terms and conditions of this bid.

The Bidder further declares that no other persons other than the authorized agent herein named has any interest in this bid or in the contract to be taken, and that it is made without any connection with any other person or persons making proposal for the same article, and is in all respects fair and without collusion or fraud.

The Bidder further declares that they have carefully examined the specifications and is thoroughly familiar with its provisions and with the quality, type and grade of materials required.

The Bidder further declares that they have provided a discount on all factory options included in this bid, and such discount will be included in all purchase orders.

The Bidder further declares that the company understands the financial responsibility associated with this bid as stated and further declares that it has the ability to meet the financial responsibility associated with this bid.

The Bidder further declares that the company will furnish the items awarded for the price bid.

FSA Contract Number: FSA26-EQU24.0 Equipment

Bidder Company Name: Doosan Bobcat North America, Inc.

Business Address: 250 E. Beaton Drive, West Fargo ND 58078

Name of Authorized Agent: Kristie Willett

Email address of authorized agent: kristie.willett@doosan.com

Signature: Signed by: Kristie Willett 1E6BB8E8E0604BD...

Date: 9/23/2026

Docusign Envelope ID: 52823F55-3CA5-8FC8-8131-DF0E918BC43A

CONTRACT SIGNATURE FORM

By submitting a response to this Invitation to Bid and signing this form, the Bidder declares that he or she has read, and the company understands, accepts and will comply with the terms, conditions and specifications of this bid and any addenda issued. The failure or omission to review this document shall in no way relieve the authorized agent of obligations with respect to this bid. The submission of a bid and signature below shall be taken as evidence of acceptance of the terms and conditions of this bid.

The Bidder further declares that no other persons other than the authorized agent herein named has any interest in this bid or in the contract to be taken, and that it is made without any connection with any other person or persons making proposal for the same article, and is in all respects fair and without collusion or fraud.

The Bidder further declares that they have carefully examined the specifications and is thoroughly familiar with its provisions and with the quality, type and grade of materials required.

The Bidder further declares that they have provided a discount on all factory options included in this bid, and such discount will be included in all purchase orders.

The Bidder further declares that the company understands the financial responsibility associated with this bid as stated and further declares that it has the ability to meet the financial responsibility associated with this bid.

The Bidder further declares that the company will furnish the items awarded for the price bid.

FSA Contract Number: FSA26-EQU24.0 Equipment

Bidder Company Name: Emergency Standby Power

Business Address: 17 Duval St, Fort Walton Beach FL 32547

Name of Authorized Agent: Marcus Budig

Email address of authorized agent: sales@espgenerators.com

Signature: Signed by: Marcus Budig 8411B4FF812B419...

Date: 9/25/2026

Docusign Envelope ID: 8AEE688B-6BDC-8EE2-827A-272EE8B7C228

CONTRACT SIGNATURE FORM

By submitting a response to this Invitation to Bid and signing this form, the Bidder declares that he or she has read, and the company understands, accepts and will comply with the terms, conditions and specifications of this bid and any addenda issued. The failure or omission to review this document shall in no way relieve the authorized agent of obligations with respect to this bid. The submission of a bid and signature below shall be taken as evidence of acceptance of the terms and conditions of this bid.

The Bidder further declares that no other persons other than the authorized agent herein named has any interest in this bid or in the contract to be taken, and that it is made without any connection with any other person or persons making proposal for the same article, and is in all respects fair and without collusion or fraud.

The Bidder further declares that they have carefully examined the specifications and is thoroughly familiar with its provisions and with the quality, type and grade of materials required.

The Bidder further declares that they have provided a discount on all factory options included in this bid, and such discount will be included in all purchase orders.

The Bidder further declares that the company understands the financial responsibility associated with this bid as stated and further declares that it has the ability to meet the financial responsibility associated with this bid.

The Bidder further declares that the company will furnish the items awarded for the price bid.

FSA Contract Number: FSA26-EQU24.0 Equipment

Bidder Company Name: Environmental Products Group Inc.

Business Address: 700 Hermit Smith Rd. Apopka, FL 32703

Name of Authorized Agent: Mitch Fratesi

Email address of authorized agent: mfratesi@myepg.com

Signature: DocuSigned by: Mitch Fratesi 087DD43302D04AE...

Date: 9/28/2026

Docusign Envelope ID: 2DE795B8-2B27-8F0A-8021-09D80689A1B4

CONTRACT SIGNATURE FORM

By submitting a response to this Invitation to Bid and signing this form, the Bidder declares that he or she has read, and the company understands, accepts and will comply with the terms, conditions and specifications of this bid and any addenda issued. The failure or omission to review this document shall in no way relieve the authorized agent of obligations with respect to this bid. The submission of a bid and signature below shall be taken as evidence of acceptance of the terms and conditions of this bid.

The Bidder further declares that no other persons other than the authorized agent herein named has any interest in this bid or in the contract to be taken, and that it is made without any connection with any other person or persons making proposal for the same article, and is in all respects fair and without collusion or fraud.

The Bidder further declares that they have carefully examined the specifications and is thoroughly familiar with its provisions and with the quality, type and grade of materials required.

The Bidder further declares that they have provided a discount on all factory options included in this bid, and such discount will be included in all purchase orders.

The Bidder further declares that the company understands the financial responsibility associated with this bid as stated and further declares that it has the ability to meet the financial responsibility associated with this bid.

The Bidder further declares that the company will furnish the items awarded for the price bid.

FSA Contract Number: FSA26-EQU24.0 Equipment

Bidder Company Name: Everglades Equipment Group

Business Address: 137 Professional Way Wellington, FL 33414

Name of Authorized Agent: Clint Vaughn

Email address of authorized agent: cvaughn@efe1963.com

Signature: Signed by: Clint Vaughn E7147624599E4AC...

Date: 9/24/2026

Docusign Envelope ID: D9235547-85E1-8658-80CC-6FAAA3A636CC

CONTRACT SIGNATURE FORM

By submitting a response to this Invitation to Bid and signing this form, the Bidder declares that he or she has read, and the company understands, accepts and will comply with the terms, conditions and specifications of this bid and any addenda issued. The failure or omission to review this document shall in no way relieve the authorized agent of obligations with respect to this bid. The submission of a bid and signature below shall be taken as evidence of acceptance of the terms and conditions of this bid.

The Bidder further declares that no other persons other than the authorized agent herein named has any interest in this bid or in the contract to be taken, and that it is made without any connection with any other person or persons making proposal for the same article, and is in all respects fair and without collusion or fraud.

The Bidder further declares that they have carefully examined the specifications and is thoroughly familiar with its provisions and with the quality, type and grade of materials required.

The Bidder further declares that they have provided a discount on all factory options included in this bid, and such discount will be included in all purchase orders.

The Bidder further declares that the company understands the financial responsibility associated with this bid as stated and further declares that it has the ability to meet the financial responsibility associated with this bid.

The Bidder further declares that the company will furnish the items awarded for the price bid.

FSA Contract Number: FSA26-EQU24.0 Equipment

Bidder Company Name: Evervac Equipment

Business Address: 5105 Recker Hwy, Winter Haven, FL 33880

Name of Authorized Agent: Austen Everett

Email address of authorized agent: AEverett@EvervacFL.com

Signature: Signed by: 50A5ADB0E57E4A9...

Date: 9/28/2026

Docusign Envelope ID: 4889BA68-EE5F-8486-8397-37A3581206F3

CONTRACT SIGNATURE FORM

By submitting a response to this Invitation to Bid and signing this form, the Bidder declares that he or she has read, and the company understands, accepts and will comply with the terms, conditions and specifications of this bid and any addenda issued. The failure or omission to review this document shall in no way relieve the authorized agent of obligations with respect to this bid. The submission of a bid and signature below shall be taken as evidence of acceptance of the terms and conditions of this bid.

The Bidder further declares that no other persons other than the authorized agent herein named has any interest in this bid or in the contract to be taken, and that it is made without any connection with any other person or persons making proposal for the same article, and is in all respects fair and without collusion or fraud.

The Bidder further declares that they have carefully examined the specifications and is thoroughly familiar with its provisions and with the quality, type and grade of materials required.

The Bidder further declares that they have provided a discount on all factory options included in this bid, and such discount will be included in all purchase orders.

The Bidder further declares that the company understands the financial responsibility associated with this bid as stated and further declares that it has the ability to meet the financial responsibility associated with this bid.

The Bidder further declares that the company will furnish the items awarded for the price bid.

FSA Contract Number: FSA26-EQU24.0 Equipment

Bidder Company Name: Federal Contracts LLC

Business Address: 12918 North Nebraska Avenue, Tampa, FL 33612-4446

Name of Authorized Agent: Rusty Pugh

Email address of authorized agent: rusty@federalcontractscorp.com

Signature: Signed by: Rusty Pugh A6F07224865043E...

Date: 9/23/2026

Docusign Envelope ID: 983AEC01-96F6-83F3-80ED-9F17B361F7A0

CONTRACT SIGNATURE FORM

By submitting a response to this Invitation to Bid and signing this form, the Bidder declares that he or she has read, and the company understands, accepts and will comply with the terms, conditions and specifications of this bid and any addenda issued. The failure or omission to review this document shall in no way relieve the authorized agent of obligations with respect to this bid. The submission of a bid and signature below shall be taken as evidence of acceptance of the terms and conditions of this bid.

The Bidder further declares that no other persons other than the authorized agent herein named has any interest in this bid or in the contract to be taken, and that it is made without any connection with any other person or persons making proposal for the same article, and is in all respects fair and without collusion or fraud.

The Bidder further declares that they have carefully examined the specifications and is thoroughly familiar with its provisions and with the quality, type and grade of materials required.

The Bidder further declares that they have provided a discount on all factory options included in this bid, and such discount will be included in all purchase orders.

The Bidder further declares that the company understands the financial responsibility associated with this bid as stated and further declares that it has the ability to meet the financial responsibility associated with this bid.

The Bidder further declares that the company will furnish the items awarded for the price bid.

FSA Contract Number: FSA26-EQU24.0 Equipment

Bidder Company Name: Florida Coast Equipment, LLC

Business Address: 1401 Forum Way, Ste 100, West Palm Beach, FL 33401

Name of Authorized Agent: Joe Moreno

Email address of authorized agent: JMoreno@FloridaCoastEQ.com

Signature: Signed by: Joe Moreno 7EC397D020F5406...

Date: 9/24/2026

Docusign Envelope ID: 87035976-1716-83DF-83FC-F6466BEFF28A

CONTRACT SIGNATURE FORM

By submitting a response to this Invitation to Bid and signing this form, the Bidder declares that he or she has read, and the company understands, accepts and will comply with the terms, conditions and specifications of this bid and any addenda issued. The failure or omission to review this document shall in no way relieve the authorized agent of obligations with respect to this bid. The submission of a bid and signature below shall be taken as evidence of acceptance of the terms and conditions of this bid.

The Bidder further declares that no other persons other than the authorized agent herein named has any interest in this bid or in the contract to be taken, and that it is made without any connection with any other person or persons making proposal for the same article, and is in all respects fair and without collusion or fraud.

The Bidder further declares that they have carefully examined the specifications and is thoroughly familiar with its provisions and with the quality, type and grade of materials required.

The Bidder further declares that they have provided a discount on all factory options included in this bid, and such discount will be included in all purchase orders.

The Bidder further declares that the company understands the financial responsibility associated with this bid as stated and further declares that it has the ability to meet the financial responsibility associated with this bid.

The Bidder further declares that the company will furnish the items awarded for the price bid.

FSA Contract Number: FSA26-EQU24.0 Equipment

Bidder Company Name: GenServe, LLC

Business Address: 3882 NW 124th Ave, Coral Springs, FL 33065

Name of Authorized Agent: John Potts

Email address of authorized agent: jpotts@genserveinc.com

Signature: Signed by: John Potts CD8D7B7A0C104E8...

Date: 9/24/2026

Docusign Envelope ID: 3996A93F-65C9-8106-8060-84DDDF5FE38B

CONTRACT SIGNATURE FORM

By submitting a response to this Invitation to Bid and signing this form, the Bidder declares that he or she has read, and the company understands, accepts and will comply with the terms, conditions and specifications of this bid and any addenda issued. The failure or omission to review this document shall in no way relieve the authorized agent of obligations with respect to this bid. The submission of a bid and signature below shall be taken as evidence of acceptance of the terms and conditions of this bid.

The Bidder further declares that no other persons other than the authorized agent herein named has any interest in this bid or in the contract to be taken, and that it is made without any connection with any other person or persons making proposal for the same article, and is in all respects fair and without collusion or fraud.

The Bidder further declares that they have carefully examined the specifications and is thoroughly familiar with its provisions and with the quality, type and grade of materials required.

The Bidder further declares that they have provided a discount on all factory options included in this bid, and such discount will be included in all purchase orders.

The Bidder further declares that the company understands the financial responsibility associated with this bid as stated and further declares that it has the ability to meet the financial responsibility associated with this bid.

The Bidder further declares that the company will furnish the items awarded for the price bid.

FSA Contract Number: FSA26-EQU24.0 Equipment

Bidder Company Name: Great Southern Equipment LLC

Business Address: 1023 S 50th St Tampa FL 33619

Name of Authorized Agent: Ray Ferwerda

Email address of authorized agent: rferwerda@gsequipment.net

Signature: DocuSigned by: Ray Ferwerda 30D58C12A8D04D5...

Date: 9/28/2026

Docusign Envelope ID: DE421ADE-155B-8D13-8139-6BAD2C4CE84E

CONTRACT SIGNATURE FORM

By submitting a response to this Invitation to Bid and signing this form, the Bidder declares that he or she has read, and the company understands, accepts and will comply with the terms, conditions and specifications of this bid and any addenda issued. The failure or omission to review this document shall in no way relieve the authorized agent of obligations with respect to this bid. The submission of a bid and signature below shall be taken as evidence of acceptance of the terms and conditions of this bid.

The Bidder further declares that no other persons other than the authorized agent herein named has any interest in this bid or in the contract to be taken, and that it is made without any connection with any other person or persons making proposal for the same article, and is in all respects fair and without collusion or fraud.

The Bidder further declares that they have carefully examined the specifications and is thoroughly familiar with its provisions and with the quality, type and grade of materials required.

The Bidder further declares that they have provided a discount on all factory options included in this bid, and such discount will be included in all purchase orders.

The Bidder further declares that the company understands the financial responsibility associated with this bid as stated and further declares that it has the ability to meet the financial responsibility associated with this bid.

The Bidder further declares that the company will furnish the items awarded for the price bid.

FSA Contract Number: FSA26-EQU24.0 Equipment

Bidder Company Name: HD CONSTRUCTION EQUIPMENT DEVELON NORTH AMERICA LLC

Business Address: 2905 Shawnee Industrial Way Suite 100

Name of Authorized Agent: RANDY SHEARIN

Email address of authorized agent: randys.equipment@yahoo.com

Signature: DocuSigned by: RANDY SHEARIN 6AD2EA0B5E1344F...

Date: 9/30/2026

Docusign Envelope ID: 46B98CA2-8572-824A-8031-53368F385AAF

CONTRACT SIGNATURE FORM

By submitting a response to this Invitation to Bid and signing this form, the Bidder declares that he or she has read, and the company understands, accepts and will comply with the terms, conditions and specifications of this bid and any addenda issued. The failure or omission to review this document shall in no way relieve the authorized agent of obligations with respect to this bid. The submission of a bid and signature below shall be taken as evidence of acceptance of the terms and conditions of this bid.

The Bidder further declares that no other persons other than the authorized agent herein named has any interest in this bid or in the contract to be taken, and that it is made without any connection with any other person or persons making proposal for the same article, and is in all respects fair and without collusion or fraud.

The Bidder further declares that they have carefully examined the specifications and is thoroughly familiar with its provisions and with the quality, type and grade of materials required.

The Bidder further declares that they have provided a discount on all factory options included in this bid, and such discount will be included in all purchase orders.

The Bidder further declares that the company understands the financial responsibility associated with this bid as stated and further declares that it has the ability to meet the financial responsibility associated with this bid.

The Bidder further declares that the company will furnish the items awarded for the price bid.

FSA Contract Number: FSA26-EQU24.0 Equipment

Bidder Company Name: Humdinger Equipment, Ltd.

Business Address: 3202 Clovis Road, Lubbock, Texas 79415

Name of Authorized Agent: Chad Phares

Email address of authorized agent: chad@humdingerequipment.com

Signature: DocuSigned by: Chad Phares 4D73F467D23C477...

Date: 9/23/2026

Docusign Envelope ID: 46CAEA82-95F5-809F-8328-CF971EFE14C3

CONTRACT SIGNATURE FORM

By submitting a response to this Invitation to Bid and signing this form, the Bidder declares that he or she has read, and the company understands, accepts and will comply with the terms, conditions and specifications of this bid and any addenda issued. The failure or omission to review this document shall in no way relieve the authorized agent of obligations with respect to this bid. The submission of a bid and signature below shall be taken as evidence of acceptance of the terms and conditions of this bid.

The Bidder further declares that no other persons other than the authorized agent herein named has any interest in this bid or in the contract to be taken, and that it is made without any connection with any other person or persons making proposal for the same article, and is in all respects fair and without collusion or fraud.

The Bidder further declares that they have carefully examined the specifications and is thoroughly familiar with its provisions and with the quality, type and grade of materials required.

The Bidder further declares that they have provided a discount on all factory options included in this bid, and such discount will be included in all purchase orders.

The Bidder further declares that the company understands the financial responsibility associated with this bid as stated and further declares that it has the ability to meet the financial responsibility associated with this bid.

The Bidder further declares that the company will furnish the items awarded for the price bid.

FSA Contract Number: FSA26-EQU24.0 Equipment

Bidder Company Name: Innovative Equipment Services 2 d/b/a CASE Power and Equipment of Florida

Business Address: 12601 W. Okeechobee Road Hialeah Gardens, FL 33018

Name of Authorized Agent: Jabbok Schlacks

Email address of authorized agent: jabbok@equipmentshare.com

Signature: DocuSigned by: Jabbok Schlacks 1A76C5C01E7F4E3...

Date: 9/28/2026

Docusign Envelope ID: F85E22BA-2CEB-8655-825D-34E8D702C5B6

CONTRACT SIGNATURE FORM

By submitting a response to this Invitation to Bid and signing this form, the Bidder declares that he or she has read, and the company understands, accepts and will comply with the terms, conditions and specifications of this bid and any addenda issued. The failure or omission to review this document shall in no way relieve the authorized agent of obligations with respect to this bid. The submission of a bid and signature below shall be taken as evidence of acceptance of the terms and conditions of this bid.

The Bidder further declares that no other persons other than the authorized agent herein named has any interest in this bid or in the contract to be taken, and that it is made without any connection with any other person or persons making proposal for the same article, and is in all respects fair and without collusion or fraud.

The Bidder further declares that they have carefully examined the specifications and is thoroughly familiar with its provisions and with the quality, type and grade of materials required.

The Bidder further declares that they have provided a discount on all factory options included in this bid, and such discount will be included in all purchase orders.

The Bidder further declares that the company understands the financial responsibility associated with this bid as stated and further declares that it has the ability to meet the financial responsibility associated with this bid.

The Bidder further declares that the company will furnish the items awarded for the price bid.

FSA Contract Number: FSA26-EQU24.0 Equipment

Bidder Company Name: Jet-Vac Equipment Company, LLC

Business Address: 5746 Broad Street Sumter, SC 29154

Name of Authorized Agent: Justin Kohl

Email address of authorized agent: justin@jet-vac.com

Signature: Signed by: Justin Kohl A2DE932E1162473...

Date: 9/25/2026

Docusign Envelope ID: 12C258CF-58D6-81B0-818B-9064CE1E1A89

CONTRACT SIGNATURE FORM

By submitting a response to this Invitation to Bid and signing this form, the Bidder declares that he or she has read, and the company understands, accepts and will comply with the terms, conditions and specifications of this bid and any addenda issued. The failure or omission to review this document shall in no way relieve the authorized agent of obligations with respect to this bid. The submission of a bid and signature below shall be taken as evidence of acceptance of the terms and conditions of this bid.

The Bidder further declares that no other persons other than the authorized agent herein named has any interest in this bid or in the contract to be taken, and that it is made without any connection with any other person or persons making proposal for the same article, and is in all respects fair and without collusion or fraud.

The Bidder further declares that they have carefully examined the specifications and is thoroughly familiar with its provisions and with the quality, type and grade of materials required.

The Bidder further declares that they have provided a discount on all factory options included in this bid, and such discount will be included in all purchase orders.

The Bidder further declares that the company understands the financial responsibility associated with this bid as stated and further declares that it has the ability to meet the financial responsibility associated with this bid.

The Bidder further declares that the company will furnish the items awarded for the price bid.

FSA Contract Number: FSA26-EQU24.0 Equipment

Bidder Company Name: Jobbers Equipment Warehouse Inc

Business Address: 5440 NW 78 AVE DORAL FL 33166

Name of Authorized Agent: Maria J Ahearn

Email address of authorized agent: support@jobbersmiami.com

Signature: Signed by: Maria J Ahearn 3CD417C35CB14E3...

Date: 9/24/2026

Docusign Envelope ID: 25860186-7D08-82BE-81FA-22138005B9F5

CONTRACT SIGNATURE FORM

By submitting a response to this Invitation to Bid and signing this form, the Bidder declares that he or she has read, and the company understands, accepts and will comply with the terms, conditions and specifications of this bid and any addenda issued. The failure or omission to review this document shall in no way relieve the authorized agent of obligations with respect to this bid. The submission of a bid and signature below shall be taken as evidence of acceptance of the terms and conditions of this bid.

The Bidder further declares that no other persons other than the authorized agent herein named has any interest in this bid or in the contract to be taken, and that it is made without any connection with any other person or persons making proposal for the same article, and is in all respects fair and without collusion or fraud.

The Bidder further declares that they have carefully examined the specifications and is thoroughly familiar with its provisions and with the quality, type and grade of materials required.

The Bidder further declares that they have provided a discount on all factory options included in this bid, and such discount will be included in all purchase orders.

The Bidder further declares that the company understands the financial responsibility associated with this bid as stated and further declares that it has the ability to meet the financial responsibility associated with this bid.

The Bidder further declares that the company will furnish the items awarded for the price bid.

FSA Contract Number: FSA26-EQU24.0 Equipment

Bidder Company Name: K&K Systems, Inc.

Business Address: 687 Palmetto Road Tupelo, MS 38801

Name of Authorized Agent: Wayne Kasal

Email address of authorized agent: wkasal@k-ksystems.com

Signature: Signed by: Wayne Kasal 5C98F80B37E94F1...

Date: 9/23/2026

Docusign Envelope ID: FB54CFE0-31B6-81DC-83C3-13B8F76C50EA

CONTRACT SIGNATURE FORM

By submitting a response to this Invitation to Bid and signing this form, the Bidder declares that he or she has read, and the company understands, accepts and will comply with the terms, conditions and specifications of this bid and any addenda issued. The failure or omission to review this document shall in no way relieve the authorized agent of obligations with respect to this bid. The submission of a bid and signature below shall be taken as evidence of acceptance of the terms and conditions of this bid.

The Bidder further declares that no other persons other than the authorized agent herein named has any interest in this bid or in the contract to be taken, and that it is made without any connection with any other person or persons making proposal for the same article, and is in all respects fair and without collusion or fraud.

The Bidder further declares that they have carefully examined the specifications and is thoroughly familiar with its provisions and with the quality, type and grade of materials required.

The Bidder further declares that they have provided a discount on all factory options included in this bid, and such discount will be included in all purchase orders.

The Bidder further declares that the company understands the financial responsibility associated with this bid as stated and further declares that it has the ability to meet the financial responsibility associated with this bid.

The Bidder further declares that the company will furnish the items awarded for the price bid.

FSA Contract Number: FSA26-EQU24.0 Equipment

Bidder Company Name: Kelly Tractor Co

Business Address: Kelly Tractor Co

Name of Authorized Agent: GREG BENNETT

Email address of authorized agent: greg_bennett@kellytractor.com

Signature: DocuSigned by: CF004C8421B342D...

Date: 9/28/2026

Docusign Envelope ID: 176C3A13-229D-8B1B-8089-0A4B88E2D370

CONTRACT SIGNATURE FORM

By submitting a response to this Invitation to Bid and signing this form, the Bidder declares that he or she has read, and the company understands, accepts and will comply with the terms, conditions and specifications of this bid and any addenda issued. The failure or omission to review this document shall in no way relieve the authorized agent of obligations with respect to this bid. The submission of a bid and signature below shall be taken as evidence of acceptance of the terms and conditions of this bid.

The Bidder further declares that no other persons other than the authorized agent herein named has any interest in this bid or in the contract to be taken, and that it is made without any connection with any other person or persons making proposal for the same article, and is in all respects fair and without collusion or fraud.

The Bidder further declares that they have carefully examined the specifications and is thoroughly familiar with its provisions and with the quality, type and grade of materials required.

The Bidder further declares that they have provided a discount on all factory options included in this bid, and such discount will be included in all purchase orders.

The Bidder further declares that the company understands the financial responsibility associated with this bid as stated and further declares that it has the ability to meet the financial responsibility associated with this bid.

The Bidder further declares that the company will furnish the items awarded for the price bid.

FSA Contract Number: FSA26-EQU24.0 Equipment

Bidder Company Name: KJF Equipment Services LLC

Business Address: 3331 N Race St, Denver CO 80205

Name of Authorized Agent: Kenneth Flores

Email address of authorized agent: Ken@kjfequipment.com

Signature: Signed by: Kenneth Flores D9A5EE2301B3423...

Date: 9/23/2026

Docusign Envelope ID: 613D23CD-6EC0-8744-81D3-06881BD7EE8C

CONTRACT SIGNATURE FORM

By submitting a response to this Invitation to Bid and signing this form, the Bidder declares that he or she has read, and the company understands, accepts and will comply with the terms, conditions and specifications of this bid and any addenda issued. The failure or omission to review this document shall in no way relieve the authorized agent of obligations with respect to this bid. The submission of a bid and signature below shall be taken as evidence of acceptance of the terms and conditions of this bid.

The Bidder further declares that no other persons other than the authorized agent herein named has any interest in this bid or in the contract to be taken, and that it is made without any connection with any other person or persons making proposal for the same article, and is in all respects fair and without collusion or fraud.

The Bidder further declares that they have carefully examined the specifications and is thoroughly familiar with its provisions and with the quality, type and grade of materials required.

The Bidder further declares that they have provided a discount on all factory options included in this bid, and such discount will be included in all purchase orders.

The Bidder further declares that the company understands the financial responsibility associated with this bid as stated and further declares that it has the ability to meet the financial responsibility associated with this bid.

The Bidder further declares that the company will furnish the items awarded for the price bid.

FSA Contract Number: FSA26-EQU24.0 Equipment

Bidder Company Name: Kustom Signals, Inc.

Business Address: 10901 W 84th Terrace Suite 100 Lenexa, KS 66214-1600

Name of Authorized Agent: eric money

Email address of authorized agent: emoney@kustomsignals.com

Signature: Signed by: eric money 09F79449BABA422...

Date: 9/23/2026

Docusign Envelope ID: B1E53AB3-24C5-8C16-818F-ACD22F466C0E

CONTRACT SIGNATURE FORM

By submitting a response to this Invitation to Bid and signing this form, the Bidder declares that he or she has read, and the company understands, accepts and will comply with the terms, conditions and specifications of this bid and any addenda issued. The failure or omission to review this document shall in no way relieve the authorized agent of obligations with respect to this bid. The submission of a bid and signature below shall be taken as evidence of acceptance of the terms and conditions of this bid.

The Bidder further declares that no other persons other than the authorized agent herein named has any interest in this bid or in the contract to be taken, and that it is made without any connection with any other person or persons making proposal for the same article, and is in all respects fair and without collusion or fraud.

The Bidder further declares that they have carefully examined the specifications and is thoroughly familiar with its provisions and with the quality, type and grade of materials required.

The Bidder further declares that they have provided a discount on all factory options included in this bid, and such discount will be included in all purchase orders.

The Bidder further declares that the company understands the financial responsibility associated with this bid as stated and further declares that it has the ability to meet the financial responsibility associated with this bid.

The Bidder further declares that the company will furnish the items awarded for the price bid.

FSA Contract Number: FSA26-EQU24.0 Equipment

Bidder Company Name: Love Power Equipment, Inc

Business Address: 2081 SOUTH SUNCOAST BLVD

Name of Authorized Agent: Ed Gurry

Email address of authorized agent: ed.gurry@lovepowerequipment.com

Signature: Signed by: Ed Gurry EA5DFADB50FD4DE...

Date: 9/23/2026

Docusign Envelope ID: 32DDAFE3-4402-8CCC-8054-DB17E0C0887C

CONTRACT SIGNATURE FORM

By submitting a response to this Invitation to Bid and signing this form, the Bidder declares that he or she has read, and the company understands, accepts and will comply with the terms, conditions and specifications of this bid and any addenda issued. The failure or omission to review this document shall in no way relieve the authorized agent of obligations with respect to this bid. The submission of a bid and signature below shall be taken as evidence of acceptance of the terms and conditions of this bid.

The Bidder further declares that no other persons other than the authorized agent herein named has any interest in this bid or in the contract to be taken, and that it is made without any connection with any other person or persons making proposal for the same article, and is in all respects fair and without collusion or fraud.

The Bidder further declares that they have carefully examined the specifications and is thoroughly familiar with its provisions and with the quality, type and grade of materials required.

The Bidder further declares that they have provided a discount on all factory options included in this bid, and such discount will be included in all purchase orders.

The Bidder further declares that the company understands the financial responsibility associated with this bid as stated and further declares that it has the ability to meet the financial responsibility associated with this bid.

The Bidder further declares that the company will furnish the items awarded for the price bid.

FSA Contract Number: FSA26-EQU24.0 Equipment

Bidder Company Name: MCKIBBEN POWERSPORTS

Business Address: 20769 US 27 Lake Wales, FL 33853

Name of Authorized Agent: Casey McKibben

Email address of authorized agent: casey.mckibben@mckibbencorp.com

Signature: Signed by: Casey Mckibben 8809E445DC86492...

Date: 9/29/2026

Docusign Envelope ID: 08EB4828-09F6-826D-81E7-DBC6F7002CE8

CONTRACT SIGNATURE FORM

By submitting a response to this Invitation to Bid and signing this form, the Bidder declares that he or she has read, and the company understands, accepts and will comply with the terms, conditions and specifications of this bid and any addenda issued. The failure or omission to review this document shall in no way relieve the authorized agent of obligations with respect to this bid. The submission of a bid and signature below shall be taken as evidence of acceptance of the terms and conditions of this bid.

The Bidder further declares that no other persons other than the authorized agent herein named has any interest in this bid or in the contract to be taken, and that it is made without any connection with any other person or persons making proposal for the same article, and is in all respects fair and without collusion or fraud.

The Bidder further declares that they have carefully examined the specifications and is thoroughly familiar with its provisions and with the quality, type and grade of materials required.

The Bidder further declares that they have provided a discount on all factory options included in this bid, and such discount will be included in all purchase orders.

The Bidder further declares that the company understands the financial responsibility associated with this bid as stated and further declares that it has the ability to meet the financial responsibility associated with this bid.

The Bidder further declares that the company will furnish the items awarded for the price bid.

FSA Contract Number: FSA26-EQU24.0 Equipment

Bidder Company Name: Menzi Muck USA, Inc.

Business Address: 1850 Fairbanks Street

Name of Authorized Agent: Christopher Meadows

Email address of authorized agent: chris@menziusa.com

Signature: DocuSigned by: E5FDCC4222AF4FD...

Date: 9/23/2026

Docusign Envelope ID: E70B2A12-32B2-8A80-83BB-F825E3967A01

CONTRACT SIGNATURE FORM

By submitting a response to this Invitation to Bid and signing this form, the Bidder declares that he or she has read, and the company understands, accepts and will comply with the terms, conditions and specifications of this bid and any addenda issued. The failure or omission to review this document shall in no way relieve the authorized agent of obligations with respect to this bid. The submission of a bid and signature below shall be taken as evidence of acceptance of the terms and conditions of this bid.

The Bidder further declares that no other persons other than the authorized agent herein named has any interest in this bid or in the contract to be taken, and that it is made without any connection with any other person or persons making proposal for the same article, and is in all respects fair and without collusion or fraud.

The Bidder further declares that they have carefully examined the specifications and is thoroughly familiar with its provisions and with the quality, type and grade of materials required.

The Bidder further declares that they have provided a discount on all factory options included in this bid, and such discount will be included in all purchase orders.

The Bidder further declares that the company understands the financial responsibility associated with this bid as stated and further declares that it has the ability to meet the financial responsibility associated with this bid.

The Bidder further declares that the company will furnish the items awarded for the price bid.

FSA Contract Number: FSA26-EQU24.0 Equipment

Bidder Company Name: Mersino

Business Address: 900 Squirrel Rd. Suite 210, Auburn Hills, Michigan 484326

Name of Authorized Agent: Scott Heard

Email address of authorized agent: scott.heard@globalpump.com

Signature: DocuSigned by: Scott Heard A2EBB747CFA2459...

Date: 9/23/2026

Docusign Envelope ID: 83292C4B-0032-8DE1-82E8-F5CB8E53CCA7

CONTRACT SIGNATURE FORM

By submitting a response to this Invitation to Bid and signing this form, the Bidder declares that he or she has read, and the company understands, accepts and will comply with the terms, conditions and specifications of this bid and any addenda issued. The failure or omission to review this document shall in no way relieve the authorized agent of obligations with respect to this bid. The submission of a bid and signature below shall be taken as evidence of acceptance of the terms and conditions of this bid.

The Bidder further declares that no other persons other than the authorized agent herein named has any interest in this bid or in the contract to be taken, and that it is made without any connection with any other person or persons making proposal for the same article, and is in all respects fair and without collusion or fraud.

The Bidder further declares that they have carefully examined the specifications and is thoroughly familiar with its provisions and with the quality, type and grade of materials required.

The Bidder further declares that they have provided a discount on all factory options included in this bid, and such discount will be included in all purchase orders.

The Bidder further declares that the company understands the financial responsibility associated with this bid as stated and further declares that it has the ability to meet the financial responsibility associated with this bid.

The Bidder further declares that the company will furnish the items awarded for the price bid.

FSA Contract Number: FSA26-EQU24.0 Equipment

Bidder Company Name: Mid-Florida Diesel, Inc

Business Address: 2215 State Road 60 East Bartow FL 33830

Name of Authorized Agent: Al McCoy

Email address of authorized agent: al@midfloridadiesel.com

Signature: Signed by: Al McCoy DC26788A5B0F413...

Date: 9/23/2026

Docusign Envelope ID: 6FBE54FD-415C-86EB-8085-9C9356927E50

CONTRACT SIGNATURE FORM

By submitting a response to this Invitation to Bid and signing this form, the Bidder declares that he or she has read, and the company understands, accepts and will comply with the terms, conditions and specifications of this bid and any addenda issued. The failure or omission to review this document shall in no way relieve the authorized agent of obligations with respect to this bid. The submission of a bid and signature below shall be taken as evidence of acceptance of the terms and conditions of this bid.

The Bidder further declares that no other persons other than the authorized agent herein named has any interest in this bid or in the contract to be taken, and that it is made without any connection with any other person or persons making proposal for the same article, and is in all respects fair and without collusion or fraud.

The Bidder further declares that they have carefully examined the specifications and is thoroughly familiar with its provisions and with the quality, type and grade of materials required.

The Bidder further declares that they have provided a discount on all factory options included in this bid, and such discount will be included in all purchase orders.

The Bidder further declares that the company understands the financial responsibility associated with this bid as stated and further declares that it has the ability to meet the financial responsibility associated with this bid.

The Bidder further declares that the company will furnish the items awarded for the price bid.

FSA Contract Number: FSA26-EQU24.0 Equipment

Bidder Company Name: Miller Heiman Holdings LLC dba Green Thumb Palm Beach

Business Address: 230 truck and trailer way, West Palm Beach FL 33413

Name of Authorized Agent: Jeff Miller

Email address of authorized agent: jmiller@greenthumbpalmbeach.com

Signature: DocuSigned by: Jeff Miller 1B82CF5CCB1E450...

Date: 9/24/2026

Docusign Envelope ID: 8A2A60E2-924A-8269-803B-67ACD2690294

CONTRACT SIGNATURE FORM

By submitting a response to this Invitation to Bid and signing this form, the Bidder declares that he or she has read, and the company understands, accepts and will comply with the terms, conditions and specifications of this bid and any addenda issued. The failure or omission to review this document shall in no way relieve the authorized agent of obligations with respect to this bid. The submission of a bid and signature below shall be taken as evidence of acceptance of the terms and conditions of this bid.

The Bidder further declares that no other persons other than the authorized agent herein named has any interest in this bid or in the contract to be taken, and that it is made without any connection with any other person or persons making proposal for the same article, and is in all respects fair and without collusion or fraud.

The Bidder further declares that they have carefully examined the specifications and is thoroughly familiar with its provisions and with the quality, type and grade of materials required.

The Bidder further declares that they have provided a discount on all factory options included in this bid, and such discount will be included in all purchase orders.

The Bidder further declares that the company understands the financial responsibility associated with this bid as stated and further declares that it has the ability to meet the financial responsibility associated with this bid.

The Bidder further declares that the company will furnish the items awarded for the price bid.

FSA Contract Number: FSA26-EQU24.0 Equipment

Bidder Company Name: Mowermax Equipment Co.

Business Address: 6902 E 7th Ave Tampa FL 33619

Name of Authorized Agent: Arthur Ward

Email address of authorized agent: arthurw@mowermax.com

Signature: Signed by: Arthur Ward 80832A01B99F4AC...

Date: 9/24/2026

Docusign Envelope ID: 7CE0BF67-3DD2-834D-808D-3A5827721F4C

CONTRACT SIGNATURE FORM

By submitting a response to this Invitation to Bid and signing this form, the Bidder declares that he or she has read, and the company understands, accepts and will comply with the terms, conditions and specifications of this bid and any addenda issued. The failure or omission to review this document shall in no way relieve the authorized agent of obligations with respect to this bid. The submission of a bid and signature below shall be taken as evidence of acceptance of the terms and conditions of this bid.

The Bidder further declares that no other persons other than the authorized agent herein named has any interest in this bid or in the contract to be taken, and that it is made without any connection with any other person or persons making proposal for the same article, and is in all respects fair and without collusion or fraud.

The Bidder further declares that they have carefully examined the specifications and is thoroughly familiar with its provisions and with the quality, type and grade of materials required.

The Bidder further declares that they have provided a discount on all factory options included in this bid, and such discount will be included in all purchase orders.

The Bidder further declares that the company understands the financial responsibility associated with this bid as stated and further declares that it has the ability to meet the financial responsibility associated with this bid.

The Bidder further declares that the company will furnish the items awarded for the price bid.

FSA Contract Number: FSA26-EQU24.0 Equipment

Bidder Company Name: MWI Corporation/ dba MWI Pumps

Business Address: 33 NW 2nd Street St Deerfield Beach, FL 33441

Name of Authorized Agent: Sean Correia

Email address of authorized agent: SeanC@mwipumps.com

Signature: Signed by: Sean Correia 590DF13F07744B0...

Date: 9/23/2026

Docusign Envelope ID: 80B7B07D-0BFE-8AB7-81DA-6BBCC3D1D6E8

CONTRACT SIGNATURE FORM

By submitting a response to this Invitation to Bid and signing this form, the Bidder declares that he or she has read, and the company understands, accepts and will comply with the terms, conditions and specifications of this bid and any addenda issued. The failure or omission to review this document shall in no way relieve the authorized agent of obligations with respect to this bid. The submission of a bid and signature below shall be taken as evidence of acceptance of the terms and conditions of this bid.

The Bidder further declares that no other persons other than the authorized agent herein named has any interest in this bid or in the contract to be taken, and that it is made without any connection with any other person or persons making proposal for the same article, and is in all respects fair and without collusion or fraud.

The Bidder further declares that they have carefully examined the specifications and is thoroughly familiar with its provisions and with the quality, type and grade of materials required.

The Bidder further declares that they have provided a discount on all factory options included in this bid, and such discount will be included in all purchase orders.

The Bidder further declares that the company understands the financial responsibility associated with this bid as stated and further declares that it has the ability to meet the financial responsibility associated with this bid.

The Bidder further declares that the company will furnish the items awarded for the price bid.

FSA Contract Number: FSA26-EQU24.0 Equipment

Bidder Company Name: National Equipment Dealers, LLC

Business Address: 215 Woodside Dr. Lexington, NC 27292

Name of Authorized Agent: Brandon Dayvault

Email address of authorized agent: bdayvault@ned.us

Signature: Signed by: Brandon Dayvault E7D1A46912CB4E7...

Date: 9/23/2026

Docusign Envelope ID: 1F233EE0-7550-885E-835D-5F3B4BEA220A

CONTRACT SIGNATURE FORM

By submitting a response to this Invitation to Bid and signing this form, the Bidder declares that he or she has read, and the company understands, accepts and will comply with the terms, conditions and specifications of this bid and any addenda issued. The failure or omission to review this document shall in no way relieve the authorized agent of obligations with respect to this bid. The submission of a bid and signature below shall be taken as evidence of acceptance of the terms and conditions of this bid.

The Bidder further declares that no other persons other than the authorized agent herein named has any interest in this bid or in the contract to be taken, and that it is made without any connection with any other person or persons making proposal for the same article, and is in all respects fair and without collusion or fraud.

The Bidder further declares that they have carefully examined the specifications and is thoroughly familiar with its provisions and with the quality, type and grade of materials required.

The Bidder further declares that they have provided a discount on all factory options included in this bid, and such discount will be included in all purchase orders.

The Bidder further declares that the company understands the financial responsibility associated with this bid as stated and further declares that it has the ability to meet the financial responsibility associated with this bid.

The Bidder further declares that the company will furnish the items awarded for the price bid.

FSA Contract Number: FSA26-EQU24.0 Equipment

Bidder Company Name: robert siano

Business Address: national lift truck ser.

Name of Authorized Agent: Robert Siano

Email address of authorized agent: rsiano@nltsuperstore.com

Signature: DocuSigned by: Robert Siano 65B4E6F0FB7A42E...

Date: 9/28/2026

Docusign Envelope ID: 7B3D89A6-23B3-8E2B-8023-8912A24EB8C1

CONTRACT SIGNATURE FORM

By submitting a response to this Invitation to Bid and signing this form, the Bidder declares that he or she has read, and the company understands, accepts and will comply with the terms, conditions and specifications of this bid and any addenda issued. The failure or omission to review this document shall in no way relieve the authorized agent of obligations with respect to this bid. The submission of a bid and signature below shall be taken as evidence of acceptance of the terms and conditions of this bid.

The Bidder further declares that no other persons other than the authorized agent herein named has any interest in this bid or in the contract to be taken, and that it is made without any connection with any other person or persons making proposal for the same article, and is in all respects fair and without collusion or fraud.

The Bidder further declares that they have carefully examined the specifications and is thoroughly familiar with its provisions and with the quality, type and grade of materials required.

The Bidder further declares that they have provided a discount on all factory options included in this bid, and such discount will be included in all purchase orders.

The Bidder further declares that the company understands the financial responsibility associated with this bid as stated and further declares that it has the ability to meet the financial responsibility associated with this bid.

The Bidder further declares that the company will furnish the items awarded for the price bid.

FSA Contract Number: FSA26-EQU24.0 Equipment

Bidder Company Name: Nationwide Haul LLC

Business Address: 1500 W Cypress Creek Road, Fort Lauderdale, FL 33309

Name of Authorized Agent: Pablo Rodriquez

Email address of authorized agent: pablo@nationwidehaul.com

Signature: Signed by: Pablo Rodriquez DDA036600D2946A...

Date: 9/23/2026

Docusign Envelope ID: 1F815943-EF44-8440-80C5-8FA0CB972075

CONTRACT SIGNATURE FORM

By submitting a response to this Invitation to Bid and signing this form, the Bidder declares that he or she has read, and the company understands, accepts and will comply with the terms, conditions and specifications of this bid and any addenda issued. The failure or omission to review this document shall in no way relieve the authorized agent of obligations with respect to this bid. The submission of a bid and signature below shall be taken as evidence of acceptance of the terms and conditions of this bid.

The Bidder further declares that no other persons other than the authorized agent herein named has any interest in this bid or in the contract to be taken, and that it is made without any connection with any other person or persons making proposal for the same article, and is in all respects fair and without collusion or fraud.

The Bidder further declares that they have carefully examined the specifications and is thoroughly familiar with its provisions and with the quality, type and grade of materials required.

The Bidder further declares that they have provided a discount on all factory options included in this bid, and such discount will be included in all purchase orders.

The Bidder further declares that the company understands the financial responsibility associated with this bid as stated and further declares that it has the ability to meet the financial responsibility associated with this bid.

The Bidder further declares that the company will furnish the items awarded for the price bid.

FSA Contract Number: FSA26-EQU24.0 Equipment

Bidder Company Name: Ocala Tractor LLC

Business Address: 5841 n us hwy 441 Ocala, Fl 34475

Name of Authorized Agent: Shawn Sadler

Email address of authorized agent: Shawn.Sadler@ocalatractor.com

Signature: Signed by: Shawn Sadler D90F110F02FB439...

Date: 9/23/2026

Docusign Envelope ID: 028A44D1-08FC-8703-805E-36C031A8D6EA

CONTRACT SIGNATURE FORM

By submitting a response to this Invitation to Bid and signing this form, the Bidder declares that he or she has read, and the company understands, accepts and will comply with the terms, conditions and specifications of this bid and any addenda issued. The failure or omission to review this document shall in no way relieve the authorized agent of obligations with respect to this bid. The submission of a bid and signature below shall be taken as evidence of acceptance of the terms and conditions of this bid.

The Bidder further declares that no other persons other than the authorized agent herein named has any interest in this bid or in the contract to be taken, and that it is made without any connection with any other person or persons making proposal for the same article, and is in all respects fair and without collusion or fraud.

The Bidder further declares that they have carefully examined the specifications and is thoroughly familiar with its provisions and with the quality, type and grade of materials required.

The Bidder further declares that they have provided a discount on all factory options included in this bid, and such discount will be included in all purchase orders.

The Bidder further declares that the company understands the financial responsibility associated with this bid as stated and further declares that it has the ability to meet the financial responsibility associated with this bid.

The Bidder further declares that the company will furnish the items awarded for the price bid.

FSA Contract Number: FSA26-EQU24.0 Equipment

Bidder Company Name: OMJC Signal Inc

Business Address: 403 Chestnut St Waterloo IA 50703

Name of Authorized Agent: Tarah Dalziel

Email address of authorized agent: Sales@omjcsignal.com

Signature: Signed by: Tarah Dalziel 45A0A1E984C743C...

Date: 9/28/2026

Docusign Envelope ID: E31140C5-A201-81F3-8376-2F8F75D1B9F4

CONTRACT SIGNATURE FORM

By submitting a response to this Invitation to Bid and signing this form, the Bidder declares that he or she has read, and the company understands, accepts and will comply with the terms, conditions and specifications of this bid and any addenda issued. The failure or omission to review this document shall in no way relieve the authorized agent of obligations with respect to this bid. The submission of a bid and signature below shall be taken as evidence of acceptance of the terms and conditions of this bid.

The Bidder further declares that no other persons other than the authorized agent herein named has any interest in this bid or in the contract to be taken, and that it is made without any connection with any other person or persons making proposal for the same article, and is in all respects fair and without collusion or fraud.

The Bidder further declares that they have carefully examined the specifications and is thoroughly familiar with its provisions and with the quality, type and grade of materials required.

The Bidder further declares that they have provided a discount on all factory options included in this bid, and such discount will be included in all purchase orders.

The Bidder further declares that the company understands the financial responsibility associated with this bid as stated and further declares that it has the ability to meet the financial responsibility associated with this bid.

The Bidder further declares that the company will furnish the items awarded for the price bid.

FSA Contract Number: FSA26-EQU24.0 Equipment

Bidder Company Name: Pantropic Power

Business Address: 8205 NW 58th Street, Miami, FL 33166

Name of Authorized Agent: Greg Bennett

Email address of authorized agent: greg_bennett@pantropic.com

Signature: Signed by: Greg Bennett B4869C363D87468...

Date: 9/28/2026

Docusign Envelope ID: 8785EEDB-7FCC-84EB-826B-4BDBE2505FC4

CONTRACT SIGNATURE FORM

By submitting a response to this Invitation to Bid and signing this form, the Bidder declares that he or she has read, and the company understands, accepts and will comply with the terms, conditions and specifications of this bid and any addenda issued. The failure or omission to review this document shall in no way relieve the authorized agent of obligations with respect to this bid. The submission of a bid and signature below shall be taken as evidence of acceptance of the terms and conditions of this bid.

The Bidder further declares that no other persons other than the authorized agent herein named has any interest in this bid or in the contract to be taken, and that it is made without any connection with any other person or persons making proposal for the same article, and is in all respects fair and without collusion or fraud.

The Bidder further declares that they have carefully examined the specifications and is thoroughly familiar with its provisions and with the quality, type and grade of materials required.

The Bidder further declares that they have provided a discount on all factory options included in this bid, and such discount will be included in all purchase orders.

The Bidder further declares that the company understands the financial responsibility associated with this bid as stated and further declares that it has the ability to meet the financial responsibility associated with this bid.

The Bidder further declares that the company will furnish the items awarded for the price bid.

FSA Contract Number: FSA26-EQU24.0 Equipment

Bidder Company Name: Pat's Pump & Blower LLC

Business Address: 2141 West Church Street, Orlando, FL 32805

Name of Authorized Agent: Kevin Fender

Email address of authorized agent: Kfender@patspump.com

Signature: DocuSigned by: Kevin Fender 23F8B3ADE32941E...

Date: 9/23/2026

Docusign Envelope ID: 01AEEBAC-A43F-8AEB-828A-B354DF58DA88

CONTRACT SIGNATURE FORM

By submitting a response to this Invitation to Bid and signing this form, the Bidder declares that he or she has read, and the company understands, accepts and will comply with the terms, conditions and specifications of this bid and any addenda issued. The failure or omission to review this document shall in no way relieve the authorized agent of obligations with respect to this bid. The submission of a bid and signature below shall be taken as evidence of acceptance of the terms and conditions of this bid.

The Bidder further declares that no other persons other than the authorized agent herein named has any interest in this bid or in the contract to be taken, and that it is made without any connection with any other person or persons making proposal for the same article, and is in all respects fair and without collusion or fraud.

The Bidder further declares that they have carefully examined the specifications and is thoroughly familiar with its provisions and with the quality, type and grade of materials required.

The Bidder further declares that they have provided a discount on all factory options included in this bid, and such discount will be included in all purchase orders.

The Bidder further declares that the company understands the financial responsibility associated with this bid as stated and further declares that it has the ability to meet the financial responsibility associated with this bid.

The Bidder further declares that the company will furnish the items awarded for the price bid.

FSA Contract Number: FSA26-EQU24.0 Equipment

Bidder Company Name: Rechtien International Trucks, Inc.

Business Address: 7227 NW 74th Ave, Miami, FL 33166

Name of Authorized Agent: Carlos Currlin

Email address of authorized agent: ccurrlin@rechtien.com

Signature: DocuSigned by: Carlos Currlin 724847F9EBC643E...

Date: 9/24/2026

Docusign Envelope ID: 200CE804-4F46-86D1-821A-9A21C1F90D63

CONTRACT SIGNATURE FORM

By submitting a response to this Invitation to Bid and signing this form, the Bidder declares that he or she has read, and the company understands, accepts and will comply with the terms, conditions and specifications of this bid and any addenda issued. The failure or omission to review this document shall in no way relieve the authorized agent of obligations with respect to this bid. The submission of a bid and signature below shall be taken as evidence of acceptance of the terms and conditions of this bid.

The Bidder further declares that no other persons other than the authorized agent herein named has any interest in this bid or in the contract to be taken, and that it is made without any connection with any other person or persons making proposal for the same article, and is in all respects fair and without collusion or fraud.

The Bidder further declares that they have carefully examined the specifications and is thoroughly familiar with its provisions and with the quality, type and grade of materials required.

The Bidder further declares that they have provided a discount on all factory options included in this bid, and such discount will be included in all purchase orders.

The Bidder further declares that the company understands the financial responsibility associated with this bid as stated and further declares that it has the ability to meet the financial responsibility associated with this bid.

The Bidder further declares that the company will furnish the items awarded for the price bid.

FSA Contract Number: FSA26-EQU24.0 Equipment

Bidder Company Name: Right Trailers, Inc.

Business Address: 7220 US Hwy 98 N, Lakeland, FL 33809

Name of Authorized Agent: Michael Scott

Email address of authorized agent: righttrailers@aol.com

Signature: DocuSigned by: Michael Scott C261493351A94A5...

Date: 9/23/2026

Docusign Envelope ID: FF624A41-E330-805C-82A0-F87861537193

CONTRACT SIGNATURE FORM

By submitting a response to this Invitation to Bid and signing this form, the Bidder declares that he or she has read, and the company understands, accepts and will comply with the terms, conditions and specifications of this bid and any addenda issued. The failure or omission to review this document shall in no way relieve the authorized agent of obligations with respect to this bid. The submission of a bid and signature below shall be taken as evidence of acceptance of the terms and conditions of this bid.

The Bidder further declares that no other persons other than the authorized agent herein named has any interest in this bid or in the contract to be taken, and that it is made without any connection with any other person or persons making proposal for the same article, and is in all respects fair and without collusion or fraud.

The Bidder further declares that they have carefully examined the specifications and is thoroughly familiar with its provisions and with the quality, type and grade of materials required.

The Bidder further declares that they have provided a discount on all factory options included in this bid, and such discount will be included in all purchase orders.

The Bidder further declares that the company understands the financial responsibility associated with this bid as stated and further declares that it has the ability to meet the financial responsibility associated with this bid.

The Bidder further declares that the company will furnish the items awarded for the price bid.

FSA Contract Number: FSA26-EQU24.0 Equipment

Bidder Company Name: Ring Power Corporation

Business Address: 500 World Commerce Parkway St Augustine, FL 32092

Name of Authorized Agent: Alan Thomas

Email address of authorized agent: alan.thomas@ringpower.com

Signature: DocuSigned by: Alan Thomas 4F45797270AE4B9...

Date: 9/23/2026

Docusign Envelope ID: 95141F18-1E02-87E2-81C0-1E00097AF2DB

CONTRACT SIGNATURE FORM

By submitting a response to this Invitation to Bid and signing this form, the Bidder declares that he or she has read, and the company understands, accepts and will comply with the terms, conditions and specifications of this bid and any addenda issued. The failure or omission to review this document shall in no way relieve the authorized agent of obligations with respect to this bid. The submission of a bid and signature below shall be taken as evidence of acceptance of the terms and conditions of this bid.

The Bidder further declares that no other persons other than the authorized agent herein named has any interest in this bid or in the contract to be taken, and that it is made without any connection with any other person or persons making proposal for the same article, and is in all respects fair and without collusion or fraud.

The Bidder further declares that they have carefully examined the specifications and is thoroughly familiar with its provisions and with the quality, type and grade of materials required.

The Bidder further declares that they have provided a discount on all factory options included in this bid, and such discount will be included in all purchase orders.

The Bidder further declares that the company understands the financial responsibility associated with this bid as stated and further declares that it has the ability to meet the financial responsibility associated with this bid.

The Bidder further declares that the company will furnish the items awarded for the price bid.

FSA Contract Number: FSA26-EQU24.0 Equipment

Bidder Company Name: Segway of Central Florida

Business Address: 5454 Foliage Way; Ste B, Apopka, FL 32712

Name of Authorized Agent: John D Watson

Email address of authorized agent: dan@segwayofcentralflorida.com

Signature: Signed by: John D Watson 8F20D22BC211413...

Date: 9/28/2026

Docusign Envelope ID: 6F8E5452-1927-8751-805A-822CCF5BE47E

CONTRACT SIGNATURE FORM

By submitting a response to this Invitation to Bid and signing this form, the Bidder declares that he or she has read, and the company understands, accepts and will comply with the terms, conditions and specifications of this bid and any addenda issued. The failure or omission to review this document shall in no way relieve the authorized agent of obligations with respect to this bid. The submission of a bid and signature below shall be taken as evidence of acceptance of the terms and conditions of this bid.

The Bidder further declares that no other persons other than the authorized agent herein named has any interest in this bid or in the contract to be taken, and that it is made without any connection with any other person or persons making proposal for the same article, and is in all respects fair and without collusion or fraud.

The Bidder further declares that they have carefully examined the specifications and is thoroughly familiar with its provisions and with the quality, type and grade of materials required.

The Bidder further declares that they have provided a discount on all factory options included in this bid, and such discount will be included in all purchase orders.

The Bidder further declares that the company understands the financial responsibility associated with this bid as stated and further declares that it has the ability to meet the financial responsibility associated with this bid.

The Bidder further declares that the company will furnish the items awarded for the price bid.

FSA Contract Number: FSA26-EQU24.0 Equipment

Bidder Company Name: Shannon Chastain Enterprises, Inc / BASIC Equipment

Business Address: 185 Harmony Road, Eatonton, GA 31024

Name of Authorized Agent: Philicia Chastain

Email address of authorized agent: philicia@basicequipment.net

Signature: Signed by: Philicia Chastain 333748D06D51417...

Date: 9/23/2026

Docusign Envelope ID: B9882962-DCEC-8B5E-8011-ABD36B0154AB

CONTRACT SIGNATURE FORM

By submitting a response to this Invitation to Bid and signing this form, the Bidder declares that he or she has read, and the company understands, accepts and will comply with the terms, conditions and specifications of this bid and any addenda issued. The failure or omission to review this document shall in no way relieve the authorized agent of obligations with respect to this bid. The submission of a bid and signature below shall be taken as evidence of acceptance of the terms and conditions of this bid.

The Bidder further declares that no other persons other than the authorized agent herein named has any interest in this bid or in the contract to be taken, and that it is made without any connection with any other person or persons making proposal for the same article, and is in all respects fair and without collusion or fraud.

The Bidder further declares that they have carefully examined the specifications and is thoroughly familiar with its provisions and with the quality, type and grade of materials required.

The Bidder further declares that they have provided a discount on all factory options included in this bid, and such discount will be included in all purchase orders.

The Bidder further declares that the company understands the financial responsibility associated with this bid as stated and further declares that it has the ability to meet the financial responsibility associated with this bid.

The Bidder further declares that the company will furnish the items awarded for the price bid.

FSA Contract Number: FSA26-EQU24.0 Equipment

Bidder Company Name: SSES Inc dba Southern Sewer Equipment Sales

Business Address: 3409 Industrial 27th Street, Fort Pierce, FL, 34946

Name of Authorized Agent: Drew Denmon

Email address of authorized agent: Drew@southernsewer.com

Signature: Signed by: 9413A6FD6EBF456...

Date: 9/25/2026

Docusign Envelope ID: 1916EC56-0B32-819D-83B7-D9E215886450

CONTRACT SIGNATURE FORM

By submitting a response to this Invitation to Bid and signing this form, the Bidder declares that he or she has read, and the company understands, accepts and will comply with the terms, conditions and specifications of this bid and any addenda issued. The failure or omission to review this document shall in no way relieve the authorized agent of obligations with respect to this bid. The submission of a bid and signature below shall be taken as evidence of acceptance of the terms and conditions of this bid.

The Bidder further declares that no other persons other than the authorized agent herein named has any interest in this bid or in the contract to be taken, and that it is made without any connection with any other person or persons making proposal for the same article, and is in all respects fair and without collusion or fraud.

The Bidder further declares that they have carefully examined the specifications and is thoroughly familiar with its provisions and with the quality, type and grade of materials required.

The Bidder further declares that they have provided a discount on all factory options included in this bid, and such discount will be included in all purchase orders.

The Bidder further declares that the company understands the financial responsibility associated with this bid as stated and further declares that it has the ability to meet the financial responsibility associated with this bid.

The Bidder further declares that the company will furnish the items awarded for the price bid.

FSA Contract Number: FSA26-EQU24.0 Equipment

Bidder Company Name: Southern States Material Handling Inc. DBA Southern States ToyotaLift

Business Address: 115 South 78th Street Tampa FL 33619

Name of Authorized Agent: Shane Polson

Email address of authorized agent: spolson@sstlift.com

Signature: Signed by: Shane Polson BE9F9292C613471...

Date: 9/24/2026

Docusign Envelope ID: 2B67A906-B383-89FC-8116-FBAEED82B497

CONTRACT SIGNATURE FORM

By submitting a response to this Invitation to Bid and signing this form, the Bidder declares that he or she has read, and the company understands, accepts and will comply with the terms, conditions and specifications of this bid and any addenda issued. The failure or omission to review this document shall in no way relieve the authorized agent of obligations with respect to this bid. The submission of a bid and signature below shall be taken as evidence of acceptance of the terms and conditions of this bid.

The Bidder further declares that no other persons other than the authorized agent herein named has any interest in this bid or in the contract to be taken, and that it is made without any connection with any other person or persons making proposal for the same article, and is in all respects fair and without collusion or fraud.

The Bidder further declares that they have carefully examined the specifications and is thoroughly familiar with its provisions and with the quality, type and grade of materials required.

The Bidder further declares that they have provided a discount on all factory options included in this bid, and such discount will be included in all purchase orders.

The Bidder further declares that the company understands the financial responsibility associated with this bid as stated and further declares that it has the ability to meet the financial responsibility associated with this bid.

The Bidder further declares that the company will furnish the items awarded for the price bid.

FSA Contract Number: FSA26-EQU24.0 Equipment

Bidder Company Name: Sunbelt Waste Equipment, LLC

Business Address: 5701 N 50th Street, Tampa FL 33610

Name of Authorized Agent: Ryan Humphrey

Email address of authorized agent: rhumphrey@sunbeltwaste.com

Signature: Signed by: Ryan Humphrey C3E4C7E549384EB...

Date: 9/24/2026

Docusign Envelope ID: E0885E70-1F08-8498-8399-309E9BA1992A

CONTRACT SIGNATURE FORM

By submitting a response to this Invitation to Bid and signing this form, the Bidder declares that he or she has read, and the company understands, accepts and will comply with the terms, conditions and specifications of this bid and any addenda issued. The failure or omission to review this document shall in no way relieve the authorized agent of obligations with respect to this bid. The submission of a bid and signature below shall be taken as evidence of acceptance of the terms and conditions of this bid.

The Bidder further declares that no other persons other than the authorized agent herein named has any interest in this bid or in the contract to be taken, and that it is made without any connection with any other person or persons making proposal for the same article, and is in all respects fair and without collusion or fraud.

The Bidder further declares that they have carefully examined the specifications and is thoroughly familiar with its provisions and with the quality, type and grade of materials required.

The Bidder further declares that they have provided a discount on all factory options included in this bid, and such discount will be included in all purchase orders.

The Bidder further declares that the company understands the financial responsibility associated with this bid as stated and further declares that it has the ability to meet the financial responsibility associated with this bid.

The Bidder further declares that the company will furnish the items awarded for the price bid.

FSA Contract Number: FSA26-EQU24.0 Equipment

Bidder Company Name: Synergy Rents LLC DBA Opifex-Synergy

Business Address: 10117 Princess Palm Ave. Ste 500 Tampa FL 33610

Name of Authorized Agent: Brian Lenaghan

Email address of authorized agent: brian.lenaghan@opifex-synergy.com

Signature: Signed by: Brian Lenaghan 3D1285311B174E5...

Date: 9/24/2026

Docusign Envelope ID: 10D9D439-B37F-8971-828D-074222F2CACA

CONTRACT SIGNATURE FORM

By submitting a response to this Invitation to Bid and signing this form, the Bidder declares that he or she has read, and the company understands, accepts and will comply with the terms, conditions and specifications of this bid and any addenda issued. The failure or omission to review this document shall in no way relieve the authorized agent of obligations with respect to this bid. The submission of a bid and signature below shall be taken as evidence of acceptance of the terms and conditions of this bid.

The Bidder further declares that no other persons other than the authorized agent herein named has any interest in this bid or in the contract to be taken, and that it is made without any connection with any other person or persons making proposal for the same article, and is in all respects fair and without collusion or fraud.

The Bidder further declares that they have carefully examined the specifications and is thoroughly familiar with its provisions and with the quality, type and grade of materials required.

The Bidder further declares that they have provided a discount on all factory options included in this bid, and such discount will be included in all purchase orders.

The Bidder further declares that the company understands the financial responsibility associated with this bid as stated and further declares that it has the ability to meet the financial responsibility associated with this bid.

The Bidder further declares that the company will furnish the items awarded for the price bid.

FSA Contract Number: FSA26-EQU24.0 Equipment

Bidder Company Name: Taylor Power Systems

Business Address: 947 Industrial Park Dr

Name of Authorized Agent: Todd Johnston

Email address of authorized agent: toddj@taylorpower.com

Signature: Signed by: Todd Johnston 3E84A74D5D42491...

Date: 9/24/2026

Docusign Envelope ID: DD3D9273-6E3F-8664-814D-2E6BF775FDE1

CONTRACT SIGNATURE FORM

By submitting a response to this Invitation to Bid and signing this form, the Bidder declares that he or she has read, and the company understands, accepts and will comply with the terms, conditions and specifications of this bid and any addenda issued. The failure or omission to review this document shall in no way relieve the authorized agent of obligations with respect to this bid. The submission of a bid and signature below shall be taken as evidence of acceptance of the terms and conditions of this bid.

The Bidder further declares that no other persons other than the authorized agent herein named has any interest in this bid or in the contract to be taken, and that it is made without any connection with any other person or persons making proposal for the same article, and is in all respects fair and without collusion or fraud.

The Bidder further declares that they have carefully examined the specifications and is thoroughly familiar with its provisions and with the quality, type and grade of materials required.

The Bidder further declares that they have provided a discount on all factory options included in this bid, and such discount will be included in all purchase orders.

The Bidder further declares that the company understands the financial responsibility associated with this bid as stated and further declares that it has the ability to meet the financial responsibility associated with this bid.

The Bidder further declares that the company will furnish the items awarded for the price bid.

FSA Contract Number: FSA26-EQU24.0 Equipment

Bidder Company Name: Texas Trailers Sales and Service

Business Address: 5601 NW 13th St. Gainesville, FL 32653

Name of Authorized Agent: Rick Croft

Email address of authorized agent: rick@texastrailersfl.com

Signature: Signed by: Rick Croft B79D42E8FD13438...

Date: 9/23/2026

Docusign Envelope ID: 92F19C6C-B6A5-8454-80B0-1E6874705878

CONTRACT SIGNATURE FORM

By submitting a response to this Invitation to Bid and signing this form, the Bidder declares that he or she has read, and the company understands, accepts and will comply with the terms, conditions and specifications of this bid and any addenda issued. The failure or omission to review this document shall in no way relieve the authorized agent of obligations with respect to this bid. The submission of a bid and signature below shall be taken as evidence of acceptance of the terms and conditions of this bid.

The Bidder further declares that no other persons other than the authorized agent herein named has any interest in this bid or in the contract to be taken, and that it is made without any connection with any other person or persons making proposal for the same article, and is in all respects fair and without collusion or fraud.

The Bidder further declares that they have carefully examined the specifications and is thoroughly familiar with its provisions and with the quality, type and grade of materials required.

The Bidder further declares that they have provided a discount on all factory options included in this bid, and such discount will be included in all purchase orders.

The Bidder further declares that the company understands the financial responsibility associated with this bid as stated and further declares that it has the ability to meet the financial responsibility associated with this bid.

The Bidder further declares that the company will furnish the items awarded for the price bid.

FSA Contract Number: FSA26-EQU24.0 Equipment

Bidder Company Name: Texas Underground, Inc.

Business Address: 1617 Garden Rd, Pearland, TX 77581

Name of Authorized Agent: Stan Stoneman

Email address of authorized agent: stan@pipehunter.com

Signature: DocuSigned by: Stan Stoneman A0000A3C60344ED...

Date: 9/23/2026

Docusign Envelope ID: BF762A82-D32A-8446-82C5-C54F204EB130

CONTRACT SIGNATURE FORM

By submitting a response to this Invitation to Bid and signing this form, the Bidder declares that he or she has read, and the company understands, accepts and will comply with the terms, conditions and specifications of this bid and any addenda issued. The failure or omission to review this document shall in no way relieve the authorized agent of obligations with respect to this bid. The submission of a bid and signature below shall be taken as evidence of acceptance of the terms and conditions of this bid.

The Bidder further declares that no other persons other than the authorized agent herein named has any interest in this bid or in the contract to be taken, and that it is made without any connection with any other person or persons making proposal for the same article, and is in all respects fair and without collusion or fraud.

The Bidder further declares that they have carefully examined the specifications and is thoroughly familiar with its provisions and with the quality, type and grade of materials required.

The Bidder further declares that they have provided a discount on all factory options included in this bid, and such discount will be included in all purchase orders.

The Bidder further declares that the company understands the financial responsibility associated with this bid as stated and further declares that it has the ability to meet the financial responsibility associated with this bid.

The Bidder further declares that the company will furnish the items awarded for the price bid.

FSA Contract Number: FSA26-EQU24.0 Equipment

Bidder Company Name: Thompson Pump and Manufacturing Company Inc.

Business Address: 4620 City Center Drive, Port Orange, FL 32129

Name of Authorized Agent: David Perry

Email address of authorized agent: dperry@thompsonpump.com

Signature: Signed by: D723BBC6D2C5435...

Date: 9/30/2026

Docusign Envelope ID: 00E00184-54F3-8BE8-8185-E79A8FF79110

CONTRACT SIGNATURE FORM

By submitting a response to this Invitation to Bid and signing this form, the Bidder declares that he or she has read, and the company understands, accepts and will comply with the terms, conditions and specifications of this bid and any addenda issued. The failure or omission to review this document shall in no way relieve the authorized agent of obligations with respect to this bid. The submission of a bid and signature below shall be taken as evidence of acceptance of the terms and conditions of this bid.

The Bidder further declares that no other persons other than the authorized agent herein named has any interest in this bid or in the contract to be taken, and that it is made without any connection with any other person or persons making proposal for the same article, and is in all respects fair and without collusion or fraud.

The Bidder further declares that they have carefully examined the specifications and is thoroughly familiar with its provisions and with the quality, type and grade of materials required.

The Bidder further declares that they have provided a discount on all factory options included in this bid, and such discount will be included in all purchase orders.

The Bidder further declares that the company understands the financial responsibility associated with this bid as stated and further declares that it has the ability to meet the financial responsibility associated with this bid.

The Bidder further declares that the company will furnish the items awarded for the price bid.

FSA Contract Number: FSA26-EQU24.0 Equipment

Bidder Company Name: Tom Evans Environmental, Inc.

Business Address: 3200 Flightline Drive, Suite 302; Lakeland, FL 33811

Name of Authorized Agent: Dennis Szczepanek

Email address of authorized agent: ds@tomevans.com

Signature: Signed by: A3E1018019644B4...

Date: 9/23/2026

Docusign Envelope ID: 1C2CF55D-30BD-81C3-833D-55CD7451105C

CONTRACT SIGNATURE FORM

By submitting a response to this Invitation to Bid and signing this form, the Bidder declares that he or she has read, and the company understands, accepts and will comply with the terms, conditions and specifications of this bid and any addenda issued. The failure or omission to review this document shall in no way relieve the authorized agent of obligations with respect to this bid. The submission of a bid and signature below shall be taken as evidence of acceptance of the terms and conditions of this bid.

The Bidder further declares that no other persons other than the authorized agent herein named has any interest in this bid or in the contract to be taken, and that it is made without any connection with any other person or persons making proposal for the same article, and is in all respects fair and without collusion or fraud.

The Bidder further declares that they have carefully examined the specifications and is thoroughly familiar with its provisions and with the quality, type and grade of materials required.

The Bidder further declares that they have provided a discount on all factory options included in this bid, and such discount will be included in all purchase orders.

The Bidder further declares that the company understands the financial responsibility associated with this bid as stated and further declares that it has the ability to meet the financial responsibility associated with this bid.

The Bidder further declares that the company will furnish the items awarded for the price bid.

FSA Contract Number: FSA26-EQU24.0 Equipment

Bidder Company Name: Tradewinds Power Corp

Business Address: 5820 NW 84th Avenue, Miami, FL. 33166

Name of Authorized Agent: Juan Monreal

Email address of authorized agent: juanm@tradewindspower.com

Signature: Signed by: Juan Monreal B8FA415D53EA4EE...

Date: 9/23/2026

Docusign Envelope ID: 2AA9AD47-72AB-8E55-8063-7A617B81D5ED

CONTRACT SIGNATURE FORM

By submitting a response to this Invitation to Bid and signing this form, the Bidder declares that he or she has read, and the company understands, accepts and will comply with the terms, conditions and specifications of this bid and any addenda issued. The failure or omission to review this document shall in no way relieve the authorized agent of obligations with respect to this bid. The submission of a bid and signature below shall be taken as evidence of acceptance of the terms and conditions of this bid.

The Bidder further declares that no other persons other than the authorized agent herein named has any interest in this bid or in the contract to be taken, and that it is made without any connection with any other person or persons making proposal for the same article, and is in all respects fair and without collusion or fraud.

The Bidder further declares that they have carefully examined the specifications and is thoroughly familiar with its provisions and with the quality, type and grade of materials required.

The Bidder further declares that they have provided a discount on all factory options included in this bid, and such discount will be included in all purchase orders.

The Bidder further declares that the company understands the financial responsibility associated with this bid as stated and further declares that it has the ability to meet the financial responsibility associated with this bid.

The Bidder further declares that the company will furnish the items awarded for the price bid.

FSA Contract Number: FSA26-EQU24.0 Equipment

Bidder Company Name: Travis Trailers

Business Address: 13955 FM 529 Houston, TX 77041

Name of Authorized Agent: Ricardo Aguinaga

Email address of authorized agent: rpaguinaga@travistrailers.com

Signature: Signed by: Ricardo Aguinaga 2A030DBF6F704EE...

Date: 9/23/2026

Docusign Envelope ID: C814DD09-993E-876A-81F6-5579CB50E59A

CONTRACT SIGNATURE FORM

By submitting a response to this Invitation to Bid and signing this form, the Bidder declares that he or she has read, and the company understands, accepts and will comply with the terms, conditions and specifications of this bid and any addenda issued. The failure or omission to review this document shall in no way relieve the authorized agent of obligations with respect to this bid. The submission of a bid and signature below shall be taken as evidence of acceptance of the terms and conditions of this bid.

The Bidder further declares that no other persons other than the authorized agent herein named has any interest in this bid or in the contract to be taken, and that it is made without any connection with any other person or persons making proposal for the same article, and is in all respects fair and without collusion or fraud.

The Bidder further declares that they have carefully examined the specifications and is thoroughly familiar with its provisions and with the quality, type and grade of materials required.

The Bidder further declares that they have provided a discount on all factory options included in this bid, and such discount will be included in all purchase orders.

The Bidder further declares that the company understands the financial responsibility associated with this bid as stated and further declares that it has the ability to meet the financial responsibility associated with this bid.

The Bidder further declares that the company will furnish the items awarded for the price bid.

FSA Contract Number: FSA26-EQU24.0 Equipment

Bidder Company Name: Vermeer Southeast

Business Address: 428 Ocoee Apopka Rd, Ocoee, FL 34761

Name of Authorized Agent: Dan Rockefeller

Email address of authorized agent: danrockefeller@VermeerSoutheast.com

Signature: Signed by: Dan Rockefeller D1E64352EC6A40D...

Date: 9/29/2026

Docusign Envelope ID: 0092790D-99FF-8E14-81A6-CD0FD281170B

CONTRACT SIGNATURE FORM

By submitting a response to this Invitation to Bid and signing this form, the Bidder declares that he or she has read, and the company understands, accepts and will comply with the terms, conditions and specifications of this bid and any addenda issued. The failure or omission to review this document shall in no way relieve the authorized agent of obligations with respect to this bid. The submission of a bid and signature below shall be taken as evidence of acceptance of the terms and conditions of this bid.

The Bidder further declares that no other persons other than the authorized agent herein named has any interest in this bid or in the contract to be taken, and that it is made without any connection with any other person or persons making proposal for the same article, and is in all respects fair and without collusion or fraud.

The Bidder further declares that they have carefully examined the specifications and is thoroughly familiar with its provisions and with the quality, type and grade of materials required.

The Bidder further declares that they have provided a discount on all factory options included in this bid, and such discount will be included in all purchase orders.

The Bidder further declares that the company understands the financial responsibility associated with this bid as stated and further declares that it has the ability to meet the financial responsibility associated with this bid.

The Bidder further declares that the company will furnish the items awarded for the price bid.

FSA Contract Number: FSA26-EQU24.0 Equipment

Bidder Company Name: Vetted Security Solutions LLC

Business Address: 4185 35th St. N., St. Petersburg, FL 33714

Name of Authorized Agent: Lori Hipskind

Email address of authorized agent: lhipskind@vettedsecurity.com

Signature: Signed by: Lori Hipskind FFCBDDFCE46F48B...

Date: 9/25/2026

Docusign Envelope ID: 8EBDA96B-B056-85FD-8232-4CB0CB19C6AD

CONTRACT SIGNATURE FORM

By submitting a response to this Invitation to Bid and signing this form, the Bidder declares that he or she has read, and the company understands, accepts and will comply with the terms, conditions and specifications of this bid and any addenda issued. The failure or omission to review this document shall in no way relieve the authorized agent of obligations with respect to this bid. The submission of a bid and signature below shall be taken as evidence of acceptance of the terms and conditions of this bid.

The Bidder further declares that no other persons other than the authorized agent herein named has any interest in this bid or in the contract to be taken, and that it is made without any connection with any other person or persons making proposal for the same article, and is in all respects fair and without collusion or fraud.

The Bidder further declares that they have carefully examined the specifications and is thoroughly familiar with its provisions and with the quality, type and grade of materials required.

The Bidder further declares that they have provided a discount on all factory options included in this bid, and such discount will be included in all purchase orders.

The Bidder further declares that the company understands the financial responsibility associated with this bid as stated and further declares that it has the ability to meet the financial responsibility associated with this bid.

The Bidder further declares that the company will furnish the items awarded for the price bid.

FSA Contract Number: FSA26-EQU24.0 Equipment

Bidder Company Name: Warren Equipment Inc

Business Address: 2299 US 92 E Plant City FL 33563

Name of Authorized Agent: Robert Flavin

Email address of authorized agent: rflavin@warrentrailers.com

Signature: Signed by: Robert Flavin A736E011AFC04C6...

Date: 9/28/2026

Docusign Envelope ID: 73DCEAF9-4F06-8F0C-8080-2116608BBDAF

CONTRACT SIGNATURE FORM

By submitting a response to this Invitation to Bid and signing this form, the Bidder declares that he or she has read, and the company understands, accepts and will comply with the terms, conditions and specifications of this bid and any addenda issued. The failure or omission to review this document shall in no way relieve the authorized agent of obligations with respect to this bid. The submission of a bid and signature below shall be taken as evidence of acceptance of the terms and conditions of this bid.

The Bidder further declares that no other persons other than the authorized agent herein named has any interest in this bid or in the contract to be taken, and that it is made without any connection with any other person or persons making proposal for the same article, and is in all respects fair and without collusion or fraud.

The Bidder further declares that they have carefully examined the specifications and is thoroughly familiar with its provisions and with the quality, type and grade of materials required.

The Bidder further declares that they have provided a discount on all factory options included in this bid, and such discount will be included in all purchase orders.

The Bidder further declares that the company understands the financial responsibility associated with this bid as stated and further declares that it has the ability to meet the financial responsibility associated with this bid.

The Bidder further declares that the company will furnish the items awarded for the price bid.

FSA Contract Number: FSA26-EQU24.0 Equipment

Bidder Company Name: Xylem Dewatering Solutions, Inc.

Business Address: 84 Floodgate Road, Bridgeport, NJ 08014

Name of Authorized Agent: Natalie Sacco

Email address of authorized agent: FSA@xylem.com

Signature: Signed by: Natalie Sacco 3E8C0FBC6E8F408...

Date: 9/28/2026

FSA Cooperative Purchasing Program

FLORIDA
SHERIFFS ASSOCIATION
COOPERATIVE
PURCHASING PROGRAM

FSA26-EQU24.0: Equipment
How to Order

How to Purchase



FSA Cooperative Purchasing Program



FSA26-EQU24.0: Equipment
Award Links

#	Group	Make	Model	Model #	Link
1	All Terrain & Utility Vehicles: All Terrain Vehicles (Quad)	CanAm	Outlander	500	https://www.myvendorlink.com/external/award?s=196709&i=1
2	All Terrain & Utility Vehicles: All Terrain Vehicles (Quad)	CFMOTO	CFORCE 500	CFORCE 500	https://www.myvendorlink.com/external/award?s=196709&i=2
3	All Terrain & Utility Vehicles: All Terrain Vehicles (Quad)	Honda	Rancher 420	TRX420FA6	https://www.myvendorlink.com/external/award?s=196709&i=3
4	All Terrain & Utility Vehicles: All Terrain Vehicles (Quad)	Honda	Rubicon 520	TRX520FA6	https://www.myvendorlink.com/external/award?s=196709&i=4
5	All Terrain & Utility Vehicles: All Terrain Vehicles (Quad)	Polaris	Sportsman 500	A27SBA50B1	https://www.myvendorlink.com/external/award?s=196709&i=5
6	All Terrain & Utility Vehicles: All Terrain Vehicles (Quad)	Polaris	Sportsman 600	A27SEA57A1	https://www.myvendorlink.com/external/award?s=196709&i=6
7	All Terrain & Utility Vehicles: All Terrain Vehicles (Quad)	Suzuki	King Quad 400 ASI	LTA400FM7	https://www.myvendorlink.com/external/award?s=196709&i=7
8	All Terrain & Utility Vehicles: All Terrain Vehicles (Quad)	Yamaha	Kodiac 450	YFM45KDXVG	https://www.myvendorlink.com/external/award?s=196709&i=8
9	All Terrain & Utility Vehicles: Electric Utility Vehicles (Side-by-Side)	Columbia	Utilitruck	Utilitruck	https://www.myvendorlink.com/external/award?s=196709&i=9
13	All Terrain & Utility Vehicles: Electric Utility Vehicles (Side-by-Side)	Landmaster	Amp	CA00143	https://www.myvendorlink.com/external/award?s=196709&i=13
14	All Terrain & Utility Vehicles: Utility Vehicles (Side-by-Side)	Bobcat	UV34	UV34	https://www.myvendorlink.com/external/award?s=196709&i=14
15	All Terrain & Utility Vehicles: Utility Vehicles (Side-by-Side)	Bobcat	UW56	UW56	https://www.myvendorlink.com/external/award?s=196709&i=15
16	All Terrain & Utility Vehicles: Utility Vehicles (Side-by-Side)	CanAm	Defender	HD7	https://www.myvendorlink.com/external/award?s=196709&i=16
17	All Terrain & Utility Vehicles: Utility Vehicles (Side-by-Side)	CFMOTO	UFORCE 600	UFORCE 600	https://www.myvendorlink.com/external/award?s=196709&i=17
18	All Terrain & Utility Vehicles: Utility Vehicles (Side-by-Side)	Honda	Pioneer 520	SXS520M2	https://www.myvendorlink.com/external/award?s=196709&i=18
19	All Terrain & Utility Vehicles: Utility Vehicles (Side-by-Side)	Honda	Pioneer 700	SXS700M2M	https://www.myvendorlink.com/external/award?s=196709&i=19
20	All Terrain & Utility Vehicles: Utility Vehicles (Side-by-Side)	John Deere	Gator	HPX615E	https://www.myvendorlink.com/external/award?s=196709&i=20
21	All Terrain & Utility Vehicles: Utility Vehicles (Side-by-Side)	Kawasaki	Mule 4x4	4010	https://www.myvendorlink.com/external/award?s=196709&i=21
22	All Terrain & Utility Vehicles: Utility Vehicles (Side-by-Side)	Kubota	RTVX2	RTVX2-BKH-1	https://www.myvendorlink.com/external/award?s=196709&i=22
23	All Terrain & Utility Vehicles: Utility Vehicles (Side-by-Side)	Landmaster	N7	CA00135	https://www.myvendorlink.com/external/award?s=196709&i=23
25	All Terrain & Utility Vehicles: Utility Vehicles (Side-by-Side)	Polaris	Pro XD Mid-Size	D27M2A57B4	https://www.myvendorlink.com/external/award?s=196709&i=25
26	All Terrain & Utility Vehicles: Utility Vehicles (Side-by-Side)	Polaris	Ranger 600	R27MAA57B8	https://www.myvendorlink.com/external/award?s=196709&i=26
28	Blower: Ride On Blower	Scag	Windstorm	WS23-37BV-EFI	https://www.myvendorlink.com/external/award?s=196709&i=28
32	Bulldozer: 180hp	Case	2050M	2050M	https://www.myvendorlink.com/external/award?s=196709&i=32
33	Bulldozer: 180hp	Caterpillar	D6	D6	https://www.myvendorlink.com/external/award?s=196709&i=33
34	Bulldozer: 180hp	John Deere	850P	850P	https://www.myvendorlink.com/external/award?s=196709&i=34
35	Bulldozer: 180hp	Liebherr	PR736	PR736	https://www.myvendorlink.com/external/award?s=196709&i=35
36	Bulldozer: 70hp	Case	650M	650M	https://www.myvendorlink.com/external/award?s=196709&i=36
37	Bulldozer: 70hp	Caterpillar	D1	D1	https://www.myvendorlink.com/external/award?s=196709&i=37
38	Bulldozer: 70hp	John Deere	450P	450P	https://www.myvendorlink.com/external/award?s=196709&i=38
39	Bulldozer: 90hp	Case	850M	850M	https://www.myvendorlink.com/external/award?s=196709&i=39
40	Bulldozer: 90hp	Caterpillar	D2	D2	https://www.myvendorlink.com/external/award?s=196709&i=40
41	Bulldozer: 90hp	DEVELON	DD100	DD100	https://www.myvendorlink.com/external/award?s=196709&i=41
42	Bulldozer: 90hp	John Deere	550P	550P	https://www.myvendorlink.com/external/award?s=196709&i=42
43	Chipper: Brush Chipper	Bandit	Intimidator	15XP	https://www.myvendorlink.com/external/award?s=196709&i=43
44	Chipper: Brush Chipper	Vermeer	BC1500	BC1500	https://www.myvendorlink.com/external/award?s=196709&i=44
46	Compactor: 80,000 lbs. Landfill Compactor	Caterpillar	826	826	https://www.myvendorlink.com/external/award?s=196709&i=46
47	Compactor: 80,000 lbs. Landfill Compactor	Tana	H380	H380	https://www.myvendorlink.com/external/award?s=196709&i=47
48	Compactor: 80,000 lbs. Landfill Compactor	Volvo	LC450	LC450	https://www.myvendorlink.com/external/award?s=196709&i=48
49	Compressor: Air Compressor - Trailer Mounted	Atlas Copco	XAS 188 T4F	XAS 188 T4F	https://www.myvendorlink.com/external/award?s=196709&i=49
50	Compressor: Air Compressor - Trailer Mounted	Bobcat	PA185VWDO-T4F	PA185VWDO-T4F	https://www.myvendorlink.com/external/award?s=196709&i=50
53	Compressor: Air Compressor - Trailer Mounted	Sullair	185 T4F	185 T4F	https://www.myvendorlink.com/external/award?s=196709&i=53
54	Compressor: Air Compressor - Trailer Mounted	Sullivan Palatek	D185P	D185P	https://www.myvendorlink.com/external/award?s=196709&i=54
55	Dump Truck: Articulating Off Road Dump Truck - 50,000 lbs. Payload	Bell	B25E	B25E	https://www.myvendorlink.com/external/award?s=196709&i=55
56	Dump Truck: Articulating Off Road Dump Truck - 50,000 lbs. Payload	Caterpillar	725	725	https://www.myvendorlink.com/external/award?s=196709&i=56
57	Dump Truck: Articulating Off Road Dump Truck - 50,000 lbs. Payload	DEVELON	DA30-5	DA30-5	https://www.myvendorlink.com/external/award?s=196709&i=57
58	Dump Truck: Articulating Off Road Dump Truck - 50,000 lbs. Payload	John Deere	260P	260P	https://www.myvendorlink.com/external/award?s=196709&i=58
59	Dump Truck: Articulating Off Road Dump Truck - 50,000 lbs. Payload	Liebherr	TA230	TA230	https://www.myvendorlink.com/external/award?s=196709&i=59
61	Dump Truck: Articulating Off Road Dump Truck - 50,000 lbs. Payload	Volvo	A25	A25	https://www.myvendorlink.com/external/award?s=196709&i=61
62	Excavator: All Terrain Walking Excavator	Euromach	R1055	R1055	https://www.myvendorlink.com/external/award?s=196709&i=62
63	Excavator: All Terrain Walking Excavator	Kaiser	S8	S8	https://www.myvendorlink.com/external/award?s=196709&i=63
64	Excavator: All Terrain Walking Excavator	Menzi Muck	M425X	M425X	https://www.myvendorlink.com/external/award?s=196709&i=64
65	Excavator: Hydraulic Excavator - 15,590 lbs. Operating Weight	Bobcat	E88	E88	https://www.myvendorlink.com/external/award?s=196709&i=65
66	Excavator: Hydraulic Excavator - 15,590 lbs. Operating Weight	Case	CX80C	CX80C	https://www.myvendorlink.com/external/award?s=196709&i=66
67	Excavator: Hydraulic Excavator - 15,590 lbs. Operating Weight	Caterpillar	308	308	https://www.myvendorlink.com/external/award?s=196709&i=67
68	Excavator: Hydraulic Excavator - 15,590 lbs. Operating Weight	DEVELON	DX89R-7	DX89R-7	https://www.myvendorlink.com/external/award?s=196709&i=68
69	Excavator: Hydraulic Excavator - 15,590 lbs. Operating Weight	Hitachi	ZX75US	ZX75US	https://www.myvendorlink.com/external/award?s=196709&i=69
70	Excavator: Hydraulic Excavator - 15,590 lbs. Operating Weight	Hyundai	HX90A	HX90A	https://www.myvendorlink.com/external/award?s=196709&i=70
71	Excavator: Hydraulic Excavator - 15,590 lbs. Operating Weight	John Deere	75P	75P	https://www.myvendorlink.com/external/award?s=196709&i=71
72	Excavator: Hydraulic Excavator - 15,590 lbs. Operating Weight	Kubota	KX080-5R3	KX080-5R3	https://www.myvendorlink.com/external/award?s=196709&i=72
73	Excavator: Hydraulic Excavator - 15,590 lbs. Operating Weight	Link-Belt	75X3	75X3	https://www.myvendorlink.com/external/award?s=196709&i=73
75	Excavator: Hydraulic Excavator - 15,590 lbs. Operating Weight	New Holland	Midi Excavator	E70D	https://www.myvendorlink.com/external/award?s=196709&i=75
77	Excavator: Hydraulic Excavator - 15,590 lbs. Operating Weight	Takeuchi	TB290	TB290	https://www.myvendorlink.com/external/award?s=196709&i=77
78	Excavator: Hydraulic Excavator - 15,590 lbs. Operating Weight	Volvo	ECR90	ECR90	https://www.myvendorlink.com/external/award?s=196709&i=78
79	Excavator: Hydraulic Excavator - 15,590 lbs. Operating Weight	Yanmar	Vi080-7	Vi080-7	https://www.myvendorlink.com/external/award?s=196709&i=79
80	Excavator: Hydraulic Excavator - 38,000 lbs. Operating Weight	Bobcat	E165	E165	https://www.myvendorlink.com/external/award?s=196709&i=80

81	Excavator: Hydraulic Excavator - 38,000 lbs. Operating Weight	Case	CX170E	CX170E	https://www.myvendorlink.com/external/award?s=196709&i=81
82	Excavator: Hydraulic Excavator - 38,000 lbs. Operating Weight	Caterpillar	317 GC	317 GC	https://www.myvendorlink.com/external/award?s=196709&i=82
83	Excavator: Hydraulic Excavator - 38,000 lbs. Operating Weight	DEVELON	DX170LC-7	DX170LC-7	https://www.myvendorlink.com/external/award?s=196709&i=83
84	Excavator: Hydraulic Excavator - 38,000 lbs. Operating Weight	Hitachi	ZX160LC	ZX160LC	https://www.myvendorlink.com/external/award?s=196709&i=84
85	Excavator: Hydraulic Excavator - 38,000 lbs. Operating Weight	Hyundai	HX160AL	HX160AL	https://www.myvendorlink.com/external/award?s=196709&i=85
86	Excavator: Hydraulic Excavator - 38,000 lbs. Operating Weight	John Deere	160P	160P	https://www.myvendorlink.com/external/award?s=196709&i=86
88	Excavator: Hydraulic Excavator - 38,000 lbs. Operating Weight	Link-Belt	170X4	170X4	https://www.myvendorlink.com/external/award?s=196709&i=88
90	Excavator: Hydraulic Excavator - 38,000 lbs. Operating Weight	Volvo	EC160	EC160	https://www.myvendorlink.com/external/award?s=196709&i=90
91	Excavator: Hydraulic Excavator - 76,550 lbs. Operating Weight	Case	CX350D	CX350D	https://www.myvendorlink.com/external/award?s=196709&i=91
92	Excavator: Hydraulic Excavator - 76,550 lbs. Operating Weight	Caterpillar	336	336	https://www.myvendorlink.com/external/award?s=196709&i=92
93	Excavator: Hydraulic Excavator - 76,550 lbs. Operating Weight	DEVELON	DX350LC-7	DX350LC-7	https://www.myvendorlink.com/external/award?s=196709&i=93
94	Excavator: Hydraulic Excavator - 76,550 lbs. Operating Weight	Hitachi	ZX350	ZX350	https://www.myvendorlink.com/external/award?s=196709&i=94
96	Excavator: Hydraulic Excavator - 76,550 lbs. Operating Weight	Hyundai	HX350AL	HX350AL	https://www.myvendorlink.com/external/award?s=196709&i=96
97	Excavator: Hydraulic Excavator - 76,550 lbs. Operating Weight	John Deere	350P	350P	https://www.myvendorlink.com/external/award?s=196709&i=97
99	Excavator: Hydraulic Excavator - 76,550 lbs. Operating Weight	Link-Belt	370X4	370X4	https://www.myvendorlink.com/external/award?s=196709&i=99
101	Excavator: Hydraulic Excavator - 76,550 lbs. Operating Weight	Volvo	EC370	EC370	https://www.myvendorlink.com/external/award?s=196709&i=101
102	Excavator: Mini Hydraulic Excavator - 7,105 lbs. Operating Weight	Bobcat	E32	E32	https://www.myvendorlink.com/external/award?s=196709&i=102
103	Excavator: Mini Hydraulic Excavator - 7,105 lbs. Operating Weight	Case	CX37C	CX37C	https://www.myvendorlink.com/external/award?s=196709&i=103
104	Excavator: Mini Hydraulic Excavator - 7,105 lbs. Operating Weight	Caterpillar	303	303	https://www.myvendorlink.com/external/award?s=196709&i=104
105	Excavator: Mini Hydraulic Excavator - 7,105 lbs. Operating Weight	DEVELON	DX35Z-7	DX35Z-7	https://www.myvendorlink.com/external/award?s=196709&i=105
106	Excavator: Mini Hydraulic Excavator - 7,105 lbs. Operating Weight	Hitachi	ZX35-U	ZX35-U	https://www.myvendorlink.com/external/award?s=196709&i=106
107	Excavator: Mini Hydraulic Excavator - 7,105 lbs. Operating Weight	Hyundai	HX35AZ	HX35AZ	https://www.myvendorlink.com/external/award?s=196709&i=107
108	Excavator: Mini Hydraulic Excavator - 7,105 lbs. Operating Weight	John Deere	35P	35P	https://www.myvendorlink.com/external/award?s=196709&i=108
109	Excavator: Mini Hydraulic Excavator - 7,105 lbs. Operating Weight	Kubota	U35	U35-4R1	https://www.myvendorlink.com/external/award?s=196709&i=109
110	Excavator: Mini Hydraulic Excavator - 7,105 lbs. Operating Weight	New Holland	Compact Excavator	E37C	https://www.myvendorlink.com/external/award?s=196709&i=110
112	Excavator: Mini Hydraulic Excavator - 7,105 lbs. Operating Weight	Takeuchi	TB240	TB240	https://www.myvendorlink.com/external/award?s=196709&i=112
113	Excavator: Mini Hydraulic Excavator - 7,105 lbs. Operating Weight	Volvo	EC37	EC37	https://www.myvendorlink.com/external/award?s=196709&i=113
114	Excavator: Mini Hydraulic Excavator - 7,105 lbs. Operating Weight	Yanmar	Vi035-7	Vi035-7	https://www.myvendorlink.com/external/award?s=196709&i=114
115	Excavator: Telescopic Excavator - 45,000 lbs. Operating Weight - Tracked Type	Gradall	XL4200	XL4200	https://www.myvendorlink.com/external/award?s=196709&i=115
116	Excavator: Telescopic Excavator - 47,000 lbs. Operating Weight - 6x6 Wheeled Type	Gradall	XL4100	XL4100	https://www.myvendorlink.com/external/award?s=196709&i=116
118	Excavator: Vacuum Excavator - Trailer Mounted	Truvac	TRXX	TRXX 800	https://www.myvendorlink.com/external/award?s=196709&i=118
119	Excavator: Vacuum Excavator - Trailer Mounted	Vac-Con	Mudslinger	MS800	https://www.myvendorlink.com/external/award?s=196709&i=119
120	Excavator: Vacuum Excavator - Trailer Mounted	Vermeer	LP873SDT	LP873SDT	https://www.myvendorlink.com/external/award?s=196709&i=120
122	Excavator: Vacuum Excavator Body, Truck Mounted - 12 cubic yd.	Gapvax	VHE	1012	https://www.myvendorlink.com/external/award?s=196709&i=122
123	Excavator: Vacuum Excavator Body, Truck Mounted - 12 cubic yd.	Truvac	HXX	HXX	https://www.myvendorlink.com/external/award?s=196709&i=123
124	Excavator: Vacuum Excavator Body, Truck Mounted - 12 cubic yd.	Sewer Equipment	Ramvac	HX-12	https://www.myvendorlink.com/external/award?s=196709&i=124
125	Excavator: Vacuum Excavator Body, Truck Mounted - 12 cubic yd.	Vac-Con	MXT	VMXTPD3612/1100	https://www.myvendorlink.com/external/award?s=196709&i=125
126	Excavator: Vacuum Excavator Body, Truck Mounted - 12 cubic yd.	Vermeer	Vacuum Excavator	VXT300	https://www.myvendorlink.com/external/award?s=196709&i=126
127	Excavator: Wheeled Hydraulic Excavator - 42,000 lbs. Operating Weight	Case	WX210E	WX21OE	https://www.myvendorlink.com/external/award?s=196709&i=127
128	Excavator: Wheeled Hydraulic Excavator - 42,000 lbs. Operating Weight	Caterpillar	M318	M318	https://www.myvendorlink.com/external/award?s=196709&i=128
129	Excavator: Wheeled Hydraulic Excavator - 42,000 lbs. Operating Weight	DEVELON	DX210W-7K	DX210W-7K	https://www.myvendorlink.com/external/award?s=196709&i=129
131	Excavator: Wheeled Hydraulic Excavator - 42,000 lbs. Operating Weight	Volvo	EW180	EW180	https://www.myvendorlink.com/external/award?s=196709&i=131
132	Forklift: Cushion Tire - 4,000 lbs. Capacity	Caterpillar	GC20CN	GC20CN	https://www.myvendorlink.com/external/award?s=196709&i=132
133	Forklift: Cushion Tire - 4,000 lbs. Capacity	Clark	S20C	S20C	https://www.myvendorlink.com/external/award?s=196709&i=133
134	Forklift: Cushion Tire - 4,000 lbs. Capacity	Crown	CGC20SC-9	CGC20SC-9	https://www.myvendorlink.com/external/award?s=196709&i=134
135	Forklift: Cushion Tire - 4,000 lbs. Capacity	Hangcha	FP20C	CPYD20-XH31B1-C	https://www.myvendorlink.com/external/award?s=196709&i=135
137	Forklift: Cushion Tire - 4,000 lbs. Capacity	Hyster	S40A	S40A	https://www.myvendorlink.com/external/award?s=196709&i=137
138	Forklift: Cushion Tire - 4,000 lbs. Capacity	Hyundai	25LC-9	25LC-9	https://www.myvendorlink.com/external/award?s=196709&i=138
139	Forklift: Cushion Tire - 4,000 lbs. Capacity	LuigGong	CLG2020G-C	CLG2020G-C	https://www.myvendorlink.com/external/award?s=196709&i=139
140	Forklift: Cushion Tire - 4,000 lbs. Capacity	Mitsubishi	FGC20CN	FGC20CN	https://www.myvendorlink.com/external/award?s=196709&i=140
141	Forklift: Cushion Tire - 4,000 lbs. Capacity	Toyota	50-8FGCU20	50-8FGCU20	https://www.myvendorlink.com/external/award?s=196709&i=141
142	Forklift: Rough Terrain Forklift - 5,000 lbs. Capacity	Case	586H	586H	https://www.myvendorlink.com/external/award?s=196709&i=142
143	Forklift: Rough Terrain Forklift - 5,000 lbs. Capacity	Hangcha	RT25	CPCD25-XW98C-RT4	https://www.myvendorlink.com/external/award?s=196709&i=143
144	Forklift: Rough Terrain Forklift - 5,000 lbs. Capacity	Harlo	HP5000	HP5000	https://www.myvendorlink.com/external/award?s=196709&i=144
146	Forklift: Rough Terrain Forklift - 5,000 lbs. Capacity	JLG	AUSA	C401H	https://www.myvendorlink.com/external/award?s=196709&i=146
147	Forklift: Rough Terrain Forklift - 5,000 lbs. Capacity	Lift King	6M42	6M42	https://www.myvendorlink.com/external/award?s=196709&i=147
149	Forklift: Rough Terrain Forklift - 5,000 lbs. Capacity	Manitou	M30-4	M30-4	https://www.myvendorlink.com/external/award?s=196709&i=149
150	Forklift: Rough Terrain Forklift - 5,000 lbs. Capacity	Master Craft	MC Series	MC-5	https://www.myvendorlink.com/external/award?s=196709&i=150
151	Forklift: Telescopic Tool Carrier/Telehandler	Bobcat	TL723	TL723	https://www.myvendorlink.com/external/award?s=196709&i=151
152	Forklift: Telescopic Tool Carrier/Telehandler	Caterpillar	TH0842	TH0842	https://www.myvendorlink.com/external/award?s=196709&i=152
153	Forklift: Telescopic Tool Carrier/Telehandler	Genie	GTH-844	GTH-844	https://www.myvendorlink.com/external/award?s=196709&i=153
154	Forklift: Telescopic Tool Carrier/Telehandler	JLG	943	943	https://www.myvendorlink.com/external/award?s=196709&i=154
155	Forklift: Telescopic Tool Carrier/Telehandler	JLG	Skytrak	10042	https://www.myvendorlink.com/external/award?s=196709&i=155
156	Forklift: Telescopic Tool Carrier/Telehandler	JLG	Rotating Telehandler	R1370	https://www.myvendorlink.com/external/award?s=196709&i=156
157	Forklift: Telescopic Tool Carrier/Telehandler	Magni	Rotating Telehandler	RTH13.72	https://www.myvendorlink.com/external/award?s=196709&i=157
158	Forklift: Telescopic Tool Carrier/Telehandler	Manitou	MTA842	MTA842	https://www.myvendorlink.com/external/award?s=196709&i=158
160	Forklift: Telescopic Tool Carrier/Telehandler	Snorkel	SR9244	SR9244	https://www.myvendorlink.com/external/award?s=196709&i=160

161	Forklift: Telescopic Tool Carrier/Telehandler	Xtreme	XR843-B	XR843-B	https://www.myvendorlink.com/external/award?s=196709&i=161
163	Generator: 125kW Stationary	Blue Star Power Systems	JD125-02	JD125-02	https://www.myvendorlink.com/external/award?s=196709&i=163
164	Generator: 125kW Stationary	Caterpillar	D125	D125	https://www.myvendorlink.com/external/award?s=196709&i=164
165	Generator: 125kW Stationary	Generac	SD130	SD130	https://www.myvendorlink.com/external/award?s=196709&i=165
166	Generator: 125kW Stationary	Gillette	SPJD-1550	SPJD-1550	https://www.myvendorlink.com/external/award?s=196709&i=166
167	Generator: 125kW Stationary	HiPower	HDI-130F	HDI-130F	https://www.myvendorlink.com/external/award?s=196709&i=167
168	Generator: 125kW Stationary	Olympian	OD125	OD125	https://www.myvendorlink.com/external/award?s=196709&i=168
169	Generator: 125kW Stationary	On Demand Power Systems	125kW Standby	ODPSJD125-01	https://www.myvendorlink.com/external/award?s=196709&i=169
171	Generator: 125kW Stationary	Taylor Power Systems	TDS125	TDS125	https://www.myvendorlink.com/external/award?s=196709&i=171
172	Generator: 125kW Stationary	Tradewinds	T125	T125	https://www.myvendorlink.com/external/award?s=196709&i=172
175	Generator: 150kW Mobile	Blue Star Power Systems	VD150-02FT4MP	VD150-02FT4MP	https://www.myvendorlink.com/external/award?s=196709&i=175
176	Generator: 150kW Mobile	Bobcat	PG190WCU-3A-T4F	PG190WCU-3A-T4F	https://www.myvendorlink.com/external/award?s=196709&i=176
177	Generator: 150kW Mobile	Caterpillar	XQ230	XQ230	https://www.myvendorlink.com/external/award?s=196709&i=177
178	Generator: 150kW Mobile	Generac	MDG175DF4	MDG175DF4	https://www.myvendorlink.com/external/award?s=196709&i=178
179	Generator: 150kW Mobile	HiPower	HRJW-190 T4F	HRJW-190 T4F	https://www.myvendorlink.com/external/award?s=196709&i=179
180	Generator: 150kW Mobile	MULTIQUIP	DCA180SSJU4F3	DCA180SSJU4F3	https://www.myvendorlink.com/external/award?s=196709&i=180
181	Generator: 150kW Mobile	On Demand Power Systems	150 kW Mobile Generator	ODPSJD150M-01	https://www.myvendorlink.com/external/award?s=196709&i=181
183	Generator: 150kW Mobile	Taylor Power Systems	TM225	TM225	https://www.myvendorlink.com/external/award?s=196709&i=183
184	Generator: 150kW Mobile	Tradewinds	T150M	T150M	https://www.myvendorlink.com/external/award?s=196709&i=184
189	Generator: 500kW Mobile	Blue Star Power Systems	VD550-02FT4MP	VD550-02FT4MP	https://www.myvendorlink.com/external/award?s=196709&i=189
190	Generator: 500kW Mobile	Caterpillar	XQ570	XQ570	https://www.myvendorlink.com/external/award?s=196709&i=190
191	Generator: 500kW Mobile	Generac	570KVA	MDE570P	https://www.myvendorlink.com/external/award?s=196709&i=191
196	Generator: 500kW Mobile	Tradewinds	T500M	T500M	https://www.myvendorlink.com/external/award?s=196709&i=196
198	Generator: 500kW Stationary	Blue Star Power Systems	VD500-01	VD500-01	https://www.myvendorlink.com/external/award?s=196709&i=198
199	Generator: 500kW Stationary	Caterpillar	C15	C15	https://www.myvendorlink.com/external/award?s=196709&i=199
200	Generator: 500kW Stationary	Generac	SD500	SD500	https://www.myvendorlink.com/external/award?s=196709&i=200
201	Generator: 500kW Stationary	Gillette	SPVD-5000	SPVD-5000	https://www.myvendorlink.com/external/award?s=196709&i=201
202	Generator: 500kW Stationary	HiPower	HDI-515V	HDI-515V	https://www.myvendorlink.com/external/award?s=196709&i=202
204	Generator: 500kW Stationary	Taylor Power Systems	TD500	TD500	https://www.myvendorlink.com/external/award?s=196709&i=204
205	Generator: 500kW Stationary	Tradewinds	T500	T500	https://www.myvendorlink.com/external/award?s=196709&i=205
207	Generator: 60kW Stationary	Blue Star Power Systems	JD60-02	JD60-02	https://www.myvendorlink.com/external/award?s=196709&i=207
208	Generator: 60kW Stationary	Caterpillar	D60	D60	https://www.myvendorlink.com/external/award?s=196709&i=208
209	Generator: 60kW Stationary	Generac	SD060	SD060	https://www.myvendorlink.com/external/award?s=196709&i=209
210	Generator: 60kW Stationary	Gillette	SPD-600	SPD-600	https://www.myvendorlink.com/external/award?s=196709&i=210
211	Generator: 60kW Stationary	Gillette	SPJD-600	SPJD-600	https://www.myvendorlink.com/external/award?s=196709&i=211
212	Generator: 60kW Stationary	HiPower	HDI-60F	HDI-60F	https://www.myvendorlink.com/external/award?s=196709&i=212
213	Generator: 60kW Stationary	Olympian	OD60	OD60	https://www.myvendorlink.com/external/award?s=196709&i=213
214	Generator: 60kW Stationary	On Demand Power Systems	60kW Standby	ODPSJD60-01	https://www.myvendorlink.com/external/award?s=196709&i=214
216	Generator: 60kW Stationary	Taylor Power Systems	TDS60	TDS60	https://www.myvendorlink.com/external/award?s=196709&i=216
217	Generator: 60kW Stationary	Tradewinds	T60	T60	https://www.myvendorlink.com/external/award?s=196709&i=217
218	Horizontal Directional Drill	Vermeer	D24X40 S3	D24X40 S3	https://www.myvendorlink.com/external/award?s=196709&i=218
220	Leaf Collector: Trailer Mounted	ODB	DCL800TM	DCL800TM	https://www.myvendorlink.com/external/award?s=196709&i=220
221	Lift: Articulated Boom Lift - Self Propelled Tracked	CTE	Traccess	170/56	https://www.myvendorlink.com/external/award?s=196709&i=221
222	Lift: Scissor Lift - Self Propelled	Genie	GS-1932	GS-1932	https://www.myvendorlink.com/external/award?s=196709&i=222
223	Lift: Scissor Lift - Self Propelled	Haulotte	Optimum 1931 AC	Optimum 1931 AC	https://www.myvendorlink.com/external/award?s=196709&i=223
224	Lift: Scissor Lift - Self Propelled	JLG	JLG ES1932	JLG ES1932	https://www.myvendorlink.com/external/award?s=196709&i=224
225	Lift: Scissor Lift - Self Propelled	Snorkel	S3219 PLUS	S3219 PLUS	https://www.myvendorlink.com/external/award?s=196709&i=225
226	Light Tower: Hybrid Light Tower	Signal Power	HT444PC	HT444PC	https://www.myvendorlink.com/external/award?s=196709&i=226
228	Light Tower: Light Tower - Trailer Mounted	Bobcat	PL65WKUB-60HZ-T4F	PL65WKUB-60HZ-T4F	https://www.myvendorlink.com/external/award?s=196709&i=228
229	Light Tower: Light Tower - Trailer Mounted	Generac	MLT4060	MLT4060	https://www.myvendorlink.com/external/award?s=196709&i=229
230	Light Tower: Light Tower - Trailer Mounted	Wacker Neuson	LTT6	LTT6	https://www.myvendorlink.com/external/award?s=196709&i=230
231	Light Tower: Light Tower - Trailer Mounted	Wanco	WLT-4MK6K	WLT-4MK6K	https://www.myvendorlink.com/external/award?s=196709&i=231
232	Loader: Loader Backhoe - 4x4	Case	580SN	580SN	https://www.myvendorlink.com/external/award?s=196709&i=232
233	Loader: Loader Backhoe - 4x4	Caterpillar	416	416	https://www.myvendorlink.com/external/award?s=196709&i=233
234	Loader: Loader Backhoe - 4x4	John Deere	310P	310P	https://www.myvendorlink.com/external/award?s=196709&i=234
235	Loader: Loader Backhoe - 4x4	New Holland	Loader Backhoe	B95D	https://www.myvendorlink.com/external/award?s=196709&i=235
237	Loader: Mini Skid Steer - 1,000 lbs. Operating Capacity - Tracked Type, Stand Up Operator	Kubota	Stand On Track Loader	SCL1000	https://www.myvendorlink.com/external/award?s=196709&i=237
238	Loader: Mini Skid Steer - 1,000 lbs. Operating Capacity - Tracked Type, Stand Up Operator	Scag	Jackal	SJ1125-N-34-25KBD	https://www.myvendorlink.com/external/award?s=196709&i=238
239	Loader: Mini Skid Steer - 1,000 lbs. Operating Capacity - Tracked Type, Stand Up Operator	Vermeer	Mini Skid Steer	ML150	https://www.myvendorlink.com/external/award?s=196709&i=239
240	Loader: Skid Steer - 1,850 lbs. Operating Capacity - Wheeled Type	Bobcat	S590	S590	https://www.myvendorlink.com/external/award?s=196709&i=240
241	Loader: Skid Steer - 1,850 lbs. Operating Capacity - Wheeled Type	Case	SV185B	SV185B	https://www.myvendorlink.com/external/award?s=196709&i=241
242	Loader: Skid Steer - 1,850 lbs. Operating Capacity - Wheeled Type	Caterpillar	236D3	236D3	https://www.myvendorlink.com/external/award?s=196709&i=242
244	Loader: Skid Steer - 1,850 lbs. Operating Capacity - Wheeled Type	John Deere	318P	318P	https://www.myvendorlink.com/external/award?s=196709&i=244
245	Loader: Skid Steer - 1,850 lbs. Operating Capacity - Wheeled Type	Kubota	SSV65	SSV65	https://www.myvendorlink.com/external/award?s=196709&i=245
246	Loader: Skid Steer - 1,850 lbs. Operating Capacity - Wheeled Type	New Holland	Skid Steer Loader	L320	https://www.myvendorlink.com/external/award?s=196709&i=246
247	Loader: Skid Steer - 1,850 lbs. Operating Capacity - Wheeled Type	New Holland	Small Articulated Loader	ML12	https://www.myvendorlink.com/external/award?s=196709&i=247
248	Loader: Skid Steer - 2,800 lbs. Operating Capacity - Wheeled Type	Case	SV340B	SV340B	https://www.myvendorlink.com/external/award?s=196709&i=248

249	Loader: Skid Steer - 2,800 lbs. Operating Capacity - Wheeled Type	Caterpillar	270	270	https://www.myvendorlink.com/external/award?s=196709&i=249
250	Loader: Skid Steer - 2,800 lbs. Operating Capacity - Wheeled Type	John Deere	330P	330P	https://www.myvendorlink.com/external/award?s=196709&i=250
252	Loader: Skid Steer - 2,800 lbs. Operating Capacity - Wheeled Type	New Holland	Skid Steer Loader	L334	https://www.myvendorlink.com/external/award?s=196709&i=252
253	Loader: Skid Steer - 3,100 lbs. Operating Capacity - Tracked Type	ASV	VT-100	VT-100	https://www.myvendorlink.com/external/award?s=196709&i=253
255	Loader: Skid Steer - 3,100 lbs. Operating Capacity - Tracked Type	Bobcat	T770	T770	https://www.myvendorlink.com/external/award?s=196709&i=255
256	Loader: Skid Steer - 3,100 lbs. Operating Capacity - Tracked Type	Case	TR310B	TR310B	https://www.myvendorlink.com/external/award?s=196709&i=256
257	Loader: Skid Steer - 3,100 lbs. Operating Capacity - Tracked Type	Caterpillar	265	265	https://www.myvendorlink.com/external/award?s=196709&i=257
258	Loader: Skid Steer - 3,100 lbs. Operating Capacity - Tracked Type	DEVELON	DTL35	DTL35	https://www.myvendorlink.com/external/award?s=196709&i=258
259	Loader: Skid Steer - 3,100 lbs. Operating Capacity - Tracked Type	John Deere	331P	331P	https://www.myvendorlink.com/external/award?s=196709&i=259
260	Loader: Skid Steer - 3,100 lbs. Operating Capacity - Tracked Type	Kioti	TL750	TL750	https://www.myvendorlink.com/external/award?s=196709&i=260
261	Loader: Skid Steer - 3,100 lbs. Operating Capacity - Tracked Type	Kubota	SVL 75-3	SVL 75-3	https://www.myvendorlink.com/external/award?s=196709&i=261
263	Loader: Skid Steer - 3,100 lbs. Operating Capacity - Tracked Type	New Holland	Compact Track Loader	C332	https://www.myvendorlink.com/external/award?s=196709&i=263
265	Loader: Skid Steer - 3,100 lbs. Operating Capacity - Tracked Type	Takeuchi	TL12V2	TL12V2	https://www.myvendorlink.com/external/award?s=196709&i=265
266	Loader: Skid Steer - 3,100 lbs. Operating Capacity - Tracked Type	Yanmar	TL100VS	TL100VS	https://www.myvendorlink.com/external/award?s=196709&i=266
267	Loader: Wheel Loader - 1.5 cubic yd.	Case	321F	321F	https://www.myvendorlink.com/external/award?s=196709&i=267
268	Loader: Wheel Loader - 1.5 cubic yd.	Caterpillar	908	908	https://www.myvendorlink.com/external/award?s=196709&i=268
269	Loader: Wheel Loader - 1.5 cubic yd.	Hitachi	ZW120	ZW120	https://www.myvendorlink.com/external/award?s=196709&i=269
270	Loader: Wheel Loader - 1.5 cubic yd.	John Deere	324P	324P	https://www.myvendorlink.com/external/award?s=196709&i=270
275	Loader: Wheel Loader - 1.5 cubic yd.	Volvo	L45	L45	https://www.myvendorlink.com/external/award?s=196709&i=275
276	Loader: Wheel Loader - 1.5 cubic yd.	Yanmar	V12	V12	https://www.myvendorlink.com/external/award?s=196709&i=276
277	Loader: Wheel Loader - 3.0 cubic yd.	Case	621G	621G	https://www.myvendorlink.com/external/award?s=196709&i=277
278	Loader: Wheel Loader - 3.0 cubic yd.	Caterpillar	926	926	https://www.myvendorlink.com/external/award?s=196709&i=278
279	Loader: Wheel Loader - 3.0 cubic yd.	DEVELON	DL220-7	DL220-7	https://www.myvendorlink.com/external/award?s=196709&i=279
280	Loader: Wheel Loader - 3.0 cubic yd.	Hitachi	ZW180	ZW180	https://www.myvendorlink.com/external/award?s=196709&i=280
281	Loader: Wheel Loader - 3.0 cubic yd.	Hyundai	HL940A	HL940A	https://www.myvendorlink.com/external/award?s=196709&i=281
282	Loader: Wheel Loader - 3.0 cubic yd.	John Deere	524P	524P	https://www.myvendorlink.com/external/award?s=196709&i=282
285	Loader: Wheel Loader - 3.0 cubic yd.	Volvo	L60	L60	https://www.myvendorlink.com/external/award?s=196709&i=285
287	Loader: Wheel Loader - 5.75 cubic yd.	Caterpillar	972	972	https://www.myvendorlink.com/external/award?s=196709&i=287
288	Loader: Wheel Loader - 5.75 cubic yd.	DEVELON	DL480-7	DL480-7	https://www.myvendorlink.com/external/award?s=196709&i=288
289	Loader: Wheel Loader - 5.75 cubic yd.	Hitachi	ZW310	ZW310	https://www.myvendorlink.com/external/award?s=196709&i=289
290	Loader: Wheel Loader - 5.75 cubic yd.	Hyundai	HL975	HL975	https://www.myvendorlink.com/external/award?s=196709&i=290
291	Loader: Wheel Loader - 5.75 cubic yd.	John Deere	744P	744P	https://www.myvendorlink.com/external/award?s=196709&i=291
293	Loader: Wheel Loader - 5.75 cubic yd.	Volvo	L150	L150	https://www.myvendorlink.com/external/award?s=196709&i=293
295	Low Speed Vehicle: Electric Type	GEM	e2	e2	https://www.myvendorlink.com/external/award?s=196709&i=295
296	Low Speed Vehicle: Electric Type	GEM	E4	E4	https://www.myvendorlink.com/external/award?s=196709&i=296
297	Low Speed Vehicle: Electric Type	ICON	ICON i40X	ICON i40X	https://www.myvendorlink.com/external/award?s=196709&i=297
300	Motor Grader: Large	Caterpillar	120	120	https://www.myvendorlink.com/external/award?s=196709&i=300
301	Motor Grader: Large	John Deere	620G	620G	https://www.myvendorlink.com/external/award?s=196709&i=301
304	Motor Grader: Small	LeeBoy	685D	685D	https://www.myvendorlink.com/external/award?s=196709&i=304
306	Motor Grader: Small	Weiler	G65	G65	https://www.myvendorlink.com/external/award?s=196709&i=306
307	Mower: 15ft. Flex Wing Rotary Mower	Bush Hog	4115	4115	https://www.myvendorlink.com/external/award?s=196709&i=307
308	Mower: 15ft. Flex Wing Rotary Mower	Bush-Whacker	ST-180	ST-180	https://www.myvendorlink.com/external/award?s=196709&i=308
309	Mower: 15ft. Flex Wing Rotary Mower	John Deere	FC15M	FC15M	https://www.myvendorlink.com/external/award?s=196709&i=309
310	Mower: 15ft. Flex Wing Rotary Mower	Land Pride	RC4715	RC4715	https://www.myvendorlink.com/external/award?s=196709&i=310
311	Mower: 15ft. Flex Wing Rotary Mower	RhinoAg	4150	4150	https://www.myvendorlink.com/external/award?s=196709&i=311
312	Mower: 15ft. Flex Wing Rotary Mower	Schulte	FX-1800	FX-1800	https://www.myvendorlink.com/external/award?s=196709&i=312
313	Mower: 15ft. Flex Wing Rotary Mower	Woods	BW15.52	BW15.52	https://www.myvendorlink.com/external/award?s=196709&i=313
316	Mower: Remote Controlled Brush Mower	AGRIA	9600-112	9600-112	https://www.myvendorlink.com/external/award?s=196709&i=316
317	Mower: Remote Controlled Brush Mower	Alamo Industrial	RC28	RC28	https://www.myvendorlink.com/external/award?s=196709&i=317
319	Mower: Remote Controlled Brush Mower	RC Mowers	R-52	R-52	https://www.myvendorlink.com/external/award?s=196709&i=319
320	Mower: Remote Controlled Brush Mower	Scag	RC Extreme Slope Mower	SRC-52D-37BV-EFI	https://www.myvendorlink.com/external/award?s=196709&i=320
321	Mower: Zero Turn Radius Mower	Bad Boy	Maverick HD	BMH60FX730	https://www.myvendorlink.com/external/award?s=196709&i=321
322	Mower: Zero Turn Radius Mower	Bad Boy	Rebel SD	BRB61ZT740	https://www.myvendorlink.com/external/award?s=196709&i=322
323	Mower: Zero Turn Radius Mower	Bobcat	ZT6100	ZT6100	https://www.myvendorlink.com/external/award?s=196709&i=323
324	Mower: Zero Turn Radius Mower	Dixie Chopper	Eagle	2760KW	https://www.myvendorlink.com/external/award?s=196709&i=324
328	Mower: Zero Turn Radius Mower	Exmark	Lazer Z S-Series	LRS801GKA604A1	https://www.myvendorlink.com/external/award?s=196709&i=328
329	Mower: Zero Turn Radius Mower	Ferris	ISX2200	5902078	https://www.myvendorlink.com/external/award?s=196709&i=329
330	Mower: Zero Turn Radius Mower	Grasshopper	225	225	https://www.myvendorlink.com/external/award?s=196709&i=330
331	Mower: Zero Turn Radius Mower	Gravely	Proturn 260	992551	https://www.myvendorlink.com/external/award?s=196709&i=331
332	Mower: Zero Turn Radius Mower	Husqvarna	Z560	Z560	https://www.myvendorlink.com/external/award?s=196709&i=332
333	Mower: Zero Turn Radius Mower	Hustler	X-One	943795	https://www.myvendorlink.com/external/award?s=196709&i=333
335	Mower: Zero Turn Radius Mower	Kubota	Z725KHNC-60	Z725KHNC-60	https://www.myvendorlink.com/external/award?s=196709&i=335
337	Mower: Zero Turn Radius Mower	Scag	Tiger Cat II	STCII61V-26FTEFI	https://www.myvendorlink.com/external/award?s=196709&i=337
339	Mower: Zero Turn Radius Mower	Wright	ZXL	WZXL61S61E8E1B	https://www.myvendorlink.com/external/award?s=196709&i=339
341	Pallet Jack: Electric 4,500 lbs. Capacity	Clark	WPX45	WPX45	https://www.myvendorlink.com/external/award?s=196709&i=341
343	Pallet Jack: Electric 4,500 lbs. Capacity	Hangcha	WP22Li	CBD22-AC1-NAI	https://www.myvendorlink.com/external/award?s=196709&i=343
345	Pallet Jack: Electric 4,500 lbs. Capacity	Jungheinrich	EJE120	EJE120	https://www.myvendorlink.com/external/award?s=196709&i=345

346	Pallet Jack: Electric 4,500 lbs. Capacity	Mitsubishi	PW23	PW23	https://www.myvendorlink.com/external/award?s=196709&i=346
349	Pipe Inspection: Battery Operated Pipe Crawler Inspection System	Pipe Trekker	A-200 Pipe Crawler	A-200	https://www.myvendorlink.com/external/award?s=196709&i=349
350	Pipe Inspection: External Power Pipe Crawler Inspection System	RapidView	Mainline HD	Mainline HD	https://www.myvendorlink.com/external/award?s=196709&i=350
351	Pipe Inspection: External Power Pipe Crawler Inspection System	Aries Industries	Voyager	TR400	https://www.myvendorlink.com/external/award?s=196709&i=351
352	Portable Signal: Portable Signal - Trailer Mounted	OMJC Signal	Light Duty Portable Traffic Signal	LDPTS-S	https://www.myvendorlink.com/external/award?s=196709&i=352
353	Pump: Mobile Pump	Atlas Copco	PAS F66 KD	PAS F66 KD	https://www.myvendorlink.com/external/award?s=196709&i=353
354	Pump: Mobile Pump	BBA Pumps	BA150E	BA150E	https://www.myvendorlink.com/external/award?s=196709&i=354
356	Pump: Mobile Pump	Global Pump	6GSTAP	6GSTAP	https://www.myvendorlink.com/external/award?s=196709&i=356
357	Pump: Mobile Pump	Godwin	CD 150S	CD 150S	https://www.myvendorlink.com/external/award?s=196709&i=357
359	Pump: Mobile Pump	MWI	CT006	CT006	https://www.myvendorlink.com/external/award?s=196709&i=359
360	Pump: Mobile Pump	Opifex-Synergy	Pump Centrif-Trash 6" AP-ST-OP-D-T	Pump Centrif-Trash 6" AP-ST-OP-D-T	https://www.myvendorlink.com/external/award?s=196709&i=360
361	Pump: Mobile Pump	Pioneer	PP66S12L71	PP66S12L71	https://www.myvendorlink.com/external/award?s=196709&i=361
363	Pump: Mobile Pump	Thompson Pump	6JSC	6JSC	https://www.myvendorlink.com/external/award?s=196709&i=363
364	Pump: Mobile Pump	Tradewinds	T66P	T66P	https://www.myvendorlink.com/external/award?s=196709&i=364
365	Roadway Advisory Board: Message Board/Automatic License Plate Reader	Vetted Security Solutions	Vetted XL Message Board Trailer	VH-MSG-XL	https://www.myvendorlink.com/external/award?s=196709&i=365
366	Roadway Advisory Board: Mobile Message Board	American Signal Company	CMS-GP465T	CMS-GP465T	https://www.myvendorlink.com/external/award?s=196709&i=366
367	Roadway Advisory Board: Mobile Message Board	K&K Systems	MB9757	MB9757	https://www.myvendorlink.com/external/award?s=196709&i=367
368	Roadway Advisory Board: Mobile Message Board	Kustom Signal	Smart VMS	2	https://www.myvendorlink.com/external/award?s=196709&i=368
369	Roadway Advisory Board: Mobile Message Board	Ver-Mac	PCMS-1500	PCMS-1500	https://www.myvendorlink.com/external/award?s=196709&i=369
370	Roadway Advisory Board: Mobile Message Board	Wanco	Full Size 3-Line Message Board Trailer	WTLMB-A	https://www.myvendorlink.com/external/award?s=196709&i=370
371	Roadway Advisory Board: Mobile Message Board	Wanco	Full Size Full Matrix Message Board Trailer	WTMMB-A	https://www.myvendorlink.com/external/award?s=196709&i=371
372	Roadway Advisory Board: Mobile Speed Board	All Traffic Solutions, INC	Shield 12 - with ATS-3 Trailer - No Cloud	4001809FSA	https://www.myvendorlink.com/external/award?s=196709&i=372
373	Roadway Advisory Board: Mobile Speed Board	All Traffic Solutions, INC	SpeedAlert 18 - With ATS-3 Trailer - No Cloud	4001811FSA	https://www.myvendorlink.com/external/award?s=196709&i=373
374	Roadway Advisory Board: Mobile Speed Board	K&K Systems	LT-ER12	LT-ER12	https://www.myvendorlink.com/external/award?s=196709&i=374
375	Roadway Advisory Board: Mobile Speed Board	Kustom Signal	Smart	12	https://www.myvendorlink.com/external/award?s=196709&i=375
376	Roadway Advisory Board: Mobile Speed Board	Ver-Mac	SP-710V	SP-710V	https://www.myvendorlink.com/external/award?s=196709&i=376
377	Roadway Advisory Board: Mobile Speed Board	Wanco	Compact Radar Speed Trailer	WSDT3-S	https://www.myvendorlink.com/external/award?s=196709&i=377
378	Roadway Advisory Board: Mobile Speed Board/Automatic License Plate Reader	Vetted Security Solutions	ALPR Speed Trailer-STANDARD	VH-SPD-STD	https://www.myvendorlink.com/external/award?s=196709&i=378
379	Roadway Advisory Board: Mobile Traffic Advisory/Directional Signal Board	K&K Systems	AT154896	AT154896	https://www.myvendorlink.com/external/award?s=196709&i=379
380	Roadway Advisory Board: Mobile Traffic Advisory/Directional Signal Board	Traffix Device	Scorpion II Trailer Attenuator with Mobile Traffic Advisory / Directional Signal Board	10002-TL3M-12TA	https://www.myvendorlink.com/external/award?s=196709&i=380
381	Roadway Advisory Board: Mobile Traffic Advisory/Directional Signal Board	Ver-Mac	ST-4825	ST-4825	https://www.myvendorlink.com/external/award?s=196709&i=381
382	Roadway Advisory Board: Mobile Traffic Advisory/Directional Signal Board	Wanco	Metro Matrix Message Board Trailer	WVTMM-L	https://www.myvendorlink.com/external/award?s=196709&i=382
383	Roadway Advisory Board: Mobile Traffic Advisory/Directional Signal Board	Wanco	WECO Arrow Board Trailer	WTSP55-LSA	https://www.myvendorlink.com/external/award?s=196709&i=383
384	Roller: Compact 2,900 lbs. - Double Drum Roller - 38in. Width	BASIC Equipment	Split Drum Vibratory Roller	120V	https://www.myvendorlink.com/external/award?s=196709&i=384
385	Roller: Compact, Pneumatic Asphalt Roller	BASIC Equipment	Pneumatic Asphalt Roller	700	https://www.myvendorlink.com/external/award?s=196709&i=385
388	Roller: Compaction Roller 15,000 lbs. - Single Drum	Caterpillar	CS7	CS7	https://www.myvendorlink.com/external/award?s=196709&i=388
389	Roller: Compaction Roller 15,000 lbs. - Single Drum	Hamm	HC70i Single Drum Vibratory Roller	HC70i	https://www.myvendorlink.com/external/award?s=196709&i=389
391	Roller: Compaction Roller 15,000 lbs. - Single Drum	Sakai	SV414D	SV414D	https://www.myvendorlink.com/external/award?s=196709&i=391
393	Roller: Compaction Roller 15,000 lbs. - Single Drum	Volvo	SD75	SD75	https://www.myvendorlink.com/external/award?s=196709&i=393
396	Roller: Large 22,000 lbs. - Double Drum Roller - 70in. Width	Caterpillar	CB13	CB13	https://www.myvendorlink.com/external/award?s=196709&i=396
398	Roller: Large 22,000 lbs. - Double Drum Roller - 70in. Width	Hamm	HD+90iVV	HD+90iVV	https://www.myvendorlink.com/external/award?s=196709&i=398
399	Roller: Large 22,000 lbs. - Double Drum Roller - 70in. Width	Sakai	SW884	SW884	https://www.myvendorlink.com/external/award?s=196709&i=399
400	Roller: Large 22,000 lbs. - Double Drum Roller - 70in. Width	Volvo	DD120	DD120	https://www.myvendorlink.com/external/award?s=196709&i=400
403	Roller: Small 5,400 lbs. - Double Drum Roller - 47in. Width	Caterpillar	CB2.7	CB2.7	https://www.myvendorlink.com/external/award?s=196709&i=403
405	Roller: Small 5,400 lbs. - Double Drum Roller - 47in. Width	Hamm	HD12-VV	HD12-VV	https://www.myvendorlink.com/external/award?s=196709&i=405
406	Roller: Small 5,400 lbs. - Double Drum Roller - 47in. Width	Volvo	DD25	DD25	https://www.myvendorlink.com/external/award?s=196709&i=406
407	Security Camera: Security Camera Tower - Trailer Mounted	American Signal Company	Zone Watch - T15 Mobile CCTV Trailer	AMS40102157	https://www.myvendorlink.com/external/award?s=196709&i=407
408	Security Camera: Security Camera Tower - Trailer Mounted	OMJC Signal	Security Camera Trailer	OWL	https://www.myvendorlink.com/external/award?s=196709&i=408
409	Security Camera: Security Camera Tower - Trailer Mounted	Vetted Security Solutions	Vetted Long Run Surveillance Trailer	VH-SURV-LR-1600W	https://www.myvendorlink.com/external/award?s=196709&i=409
410	Sewer Cleaner: Combination Sewer Cleaning/Vacuum Machine Body - 10 cubic yd.	Aquatech	B-10	B-10	https://www.myvendorlink.com/external/award?s=196709&i=410
411	Sewer Cleaner: Combination Sewer Cleaning/Vacuum Machine Body - 10 cubic yd.	Gapvax	MC	1510	https://www.myvendorlink.com/external/award?s=196709&i=411
412	Sewer Cleaner: Combination Sewer Cleaning/Vacuum Machine Body - 10 cubic yd.	PipeHunter	VacHunter Combo	101035 PH8C	https://www.myvendorlink.com/external/award?s=196709&i=412
413	Sewer Cleaner: Combination Sewer Cleaning/Vacuum Machine Body - 10 cubic yd.	Sewer Equipment	900 ECO-12YD	900 ECO-12YD	https://www.myvendorlink.com/external/award?s=196709&i=413
414	Sewer Cleaner: Combination Sewer Cleaning/Vacuum Machine Body - 10 cubic yd.	Super Products	Camel Max	1200	https://www.myvendorlink.com/external/award?s=196709&i=414
415	Sewer Cleaner: Combination Sewer Cleaning/Vacuum Machine Body - 10 cubic yd.	Vacall	AJV1010	AJV1010	https://www.myvendorlink.com/external/award?s=196709&i=415
416	Sewer Cleaner: Combination Sewer Cleaning/Vacuum Machine Body - 10 cubic yd.	Vac-Con	V310N/1000	V310N/1000	https://www.myvendorlink.com/external/award?s=196709&i=416
417	Sewer Cleaner: Combination Sewer Cleaning/Vacuum Machine Body - 10 cubic yd.	Vac-Con	VPD4210SA/1000	VPD4210SA/1000	https://www.myvendorlink.com/external/award?s=196709&i=417
418	Sewer Cleaner: Combination Sewer Cleaning/Vacuum Machine Body - 10 cubic yd.	Vactor	2100l	2100l	https://www.myvendorlink.com/external/award?s=196709&i=418
419	Sewer Cleaner: Easement Machine	Prowler Equipment	Extendable Track Easement Machine	PR-ET	https://www.myvendorlink.com/external/award?s=196709&i=419
423	Sewer Cleaner: Trailer Mounted Sewer Cleaner	PipeHunter	700 Gallon Tandem Trailer Jetter	3744	https://www.myvendorlink.com/external/award?s=196709&i=423
425	Sewer Cleaner: Trailer Mounted Sewer Cleaner	Vac-Con	VecJet	VJ750	https://www.myvendorlink.com/external/award?s=196709&i=425
426	Sewer Cleaner: Trailer Mounted Sewer Cleaner	Vactor	RamJet	4018	https://www.myvendorlink.com/external/award?s=196709&i=426
432	Shop Tools & Equipment	ARI-HETRA	Brake Hub Removal Jack	WS-18-HR	https://www.myvendorlink.com/external/award?s=196709&i=432
433	Shop Tools & Equipment	ARI-HETRA	Floor Jack	WS-16124	https://www.myvendorlink.com/external/award?s=196709&i=433
434	Shop Tools & Equipment	ARI-HETRA	King Pin Press	WS-KPP143	https://www.myvendorlink.com/external/award?s=196709&i=434
435	Shop Tools & Equipment	ARI-HETRA	On Vehicle Brake Lathe	WS-BL44	https://www.myvendorlink.com/external/award?s=196709&i=435
436	Shop Tools & Equipment	ARI-HETRA	Tire Changer	WS-12645	https://www.myvendorlink.com/external/award?s=196709&i=436

437	Shop Tools & Equipment	ARI-HETRA	Tire Inflation Cage	WS-35026	https://www.myvendorlink.com/external/award?s=196709&i=437
438	Shop Tools & Equipment	ARI-HETRA	Wheel Balancer	WS-12890	https://www.myvendorlink.com/external/award?s=196709&i=438
439	Shop Tools & Equipment	ARI-HETRA	Wheel Dolly	WS-AH20440	https://www.myvendorlink.com/external/award?s=196709&i=439
440	Shop Tools & Equipment	Coats	Maxx 80	Maxx 80	https://www.myvendorlink.com/external/award?s=196709&i=440
450	Shop Tools & Equipment	Sullair	3709B	3709B	https://www.myvendorlink.com/external/award?s=196709&i=450
452	Shredder: Mobile Shredder/Grinder	Tana Shark	440D	440D	https://www.myvendorlink.com/external/award?s=196709&i=452
453	Simulator System: Equipment Operator Simulator	Caterpillar	Technology - Equipment Simulation	N/A	https://www.myvendorlink.com/external/award?s=196709&i=453
454	Solid Waste Material Handler: Wheeled Type	Caterpillar	MH3022	MH3022	https://www.myvendorlink.com/external/award?s=196709&i=454
455	Solid Waste Material Handler: Wheeled Type	Hyundai	HW250AMH	HW250AMH	https://www.myvendorlink.com/external/award?s=196709&i=455
456	Solid Waste Material Handler: Wheeled Type	Liebherr	LH26M	LH26M	https://www.myvendorlink.com/external/award?s=196709&i=456
457	Solid Waste Material Handler: Wheeled Type	Volvo	EW240	EW240	https://www.myvendorlink.com/external/award?s=196709&i=457
458	Stump Cutter	Bandit	2550	2550	https://www.myvendorlink.com/external/award?s=196709&i=458
459	Stump Cutter	Toro	STX 38	STX 38	https://www.myvendorlink.com/external/award?s=196709&i=459
460	Stump Cutter	Vermeer	SC362	SC362	https://www.myvendorlink.com/external/award?s=196709&i=460
461	Sweeper: 3-Wheel Mechanical or Regenerative Air Sweeper	Elgin	Pelican NP	Pelican NP	https://www.myvendorlink.com/external/award?s=196709&i=461
462	Sweeper: 3-Wheel Mechanical or Regenerative Air Sweeper	Global	M3	M3	https://www.myvendorlink.com/external/award?s=196709&i=462
463	Sweeper: 3-Wheel Mechanical or Regenerative Air Sweeper	Global	R3	R3	https://www.myvendorlink.com/external/award?s=196709&i=463
466	Sweeper: Mechanical Broom Street Sweeper	Bucher Municipal	E35m	E35m	https://www.myvendorlink.com/external/award?s=196709&i=466
467	Sweeper: Mechanical Broom Street Sweeper	Elgin	Eagle	Eagle	https://www.myvendorlink.com/external/award?s=196709&i=467
470	Sweeper: Mechanical Broom Street Sweeper	Schwarze Industries	M6 Avalanche	M6 Avalanche	https://www.myvendorlink.com/external/award?s=196709&i=470
471	Sweeper: Regenerative Air Street Sweeper	Bucher Municipal	R65	R65	https://www.myvendorlink.com/external/award?s=196709&i=471
472	Sweeper: Regenerative Air Street Sweeper	Elgin	Regen X	Regen X	https://www.myvendorlink.com/external/award?s=196709&i=472
473	Sweeper: Regenerative Air Street Sweeper	Schwarze Industries	A7 Tornado	A7 Tornado	https://www.myvendorlink.com/external/award?s=196709&i=473
474	Sweeper: Regenerative Air Street Sweeper	Schwarze Industries	A8 Twister	A8 Twister	https://www.myvendorlink.com/external/award?s=196709&i=474
475	Sweeper: Regenerative Air Street Sweeper	Schwarze Industries	A9 Monsoon	A9 Monsoon	https://www.myvendorlink.com/external/award?s=196709&i=475
476	Sweeper: Regenerative Air Street Sweeper	Tymco	600	600	https://www.myvendorlink.com/external/award?s=196709&i=476
477	Sweeper: Self-Propelled Hydrostatic Broom	Broce	350 Broom	350 Broom	https://www.myvendorlink.com/external/award?s=196709&i=477
478	Sweeper: Self-Propelled Hydrostatic Broom	LeeBoy	RB-50	RB-50	https://www.myvendorlink.com/external/award?s=196709&i=478
481	Sweeper: Self-Propelled Hydrostatic Broom	Weiler	B400	B400	https://www.myvendorlink.com/external/award?s=196709&i=481
483	Sweeper: Compact Air Sweeper - 2.3 cubic yd.	Ravo	R5	R5	https://www.myvendorlink.com/external/award?s=196709&i=483
484	Sweeper: Vacuum Street Sweeper	Scarab	Magnum	U72	https://www.myvendorlink.com/external/award?s=196709&i=484
485	Sweeper: Walk Behind Floor Sweeper/Scrubber	PowerBoss	Phoenix	26	https://www.myvendorlink.com/external/award?s=196709&i=485
486	Tactical Vehicle: Skid Steer Mounted (The Rook)	Caterpillar	275 with Rook Option	275 with Rook Option	https://www.myvendorlink.com/external/award?s=196709&i=486
487	Tool Carrier: Hydrostatic Drive	Alamo Industrial	Mantis	155B	https://www.myvendorlink.com/external/award?s=196709&i=487
488	Tool Carrier: Hydrostatic Drive	Diamond Mowers	DM360	DM360	https://www.myvendorlink.com/external/award?s=196709&i=488
489	Tool Carrier: Hydrostatic Drive	Energreen America	Kommunal	Kommunal	https://www.myvendorlink.com/external/award?s=196709&i=489
490	Tool Carrier: Hydrostatic Drive	MowerMax	Tool Carrier	MMB22	https://www.myvendorlink.com/external/award?s=196709&i=490
492	Tractor: Agriculture Tractor - 4x2	John Deere	5105M	5105M	https://www.myvendorlink.com/external/award?s=196709&i=492
493	Tractor: Agriculture Tractor - 4x2	Kubota	M5-111HF-1	M5-111HF-1	https://www.myvendorlink.com/external/award?s=196709&i=493
494	Tractor: Agriculture Tractor - 4x2	Massey Ferguson	MF4709	MF4709	https://www.myvendorlink.com/external/award?s=196709&i=494
495	Tractor: Agriculture Tractor - 4x2	New Holland	Powerstar	100	https://www.myvendorlink.com/external/award?s=196709&i=495
496	Tractor: Agriculture Tractor - 4x2	New Holland	PowerStar Series	PowerStar 100	https://www.myvendorlink.com/external/award?s=196709&i=496
497	Tractor: Compact Articulating Tractor - AWD	Avant	528	528	https://www.myvendorlink.com/external/award?s=196709&i=497
498	Tractor: Small Agriculture Tractor - 4x4	Bad Boy	40 Series	4035	https://www.myvendorlink.com/external/award?s=196709&i=498
501	Tractor: Small Agriculture Tractor - 4x4	John Deere	3035D	3035D	https://www.myvendorlink.com/external/award?s=196709&i=501
502	Tractor: Small Agriculture Tractor - 4x4	Kioti	CK3520	CK3520	https://www.myvendorlink.com/external/award?s=196709&i=502
503	Tractor: Small Agriculture Tractor - 4x4	Kubota	L3902 DT	L3902 DT	https://www.myvendorlink.com/external/award?s=196709&i=503
504	Tractor: Small Agriculture Tractor - 4x4	Massey Ferguson	MF1E.35	MF1E.35	https://www.myvendorlink.com/external/award?s=196709&i=504
505	Tractor: Small Agriculture Tractor - 4x4	New Holland	Boomer	35	https://www.myvendorlink.com/external/award?s=196709&i=505
506	Tractor: Small Agriculture Tractor - 4x4	New Holland	Boomer Compact	Boomer 35	https://www.myvendorlink.com/external/award?s=196709&i=506
508	Tractor: Tractor with Boom Mower - 4x4	John Deere	6M125 Alamo Industrial Mower	6M125	https://www.myvendorlink.com/external/award?s=196709&i=508
509	Tractor: Tractor with Boom Mower - 4x4	John Deere	6M125 with Tiger Bengal Boom Mower	6M125	https://www.myvendorlink.com/external/award?s=196709&i=509
510	Tractor: Tractor with Boom Mower - 4x4	Kubota	M6S-111 with Terrain King KB2300 Boom Mower	M6S-111	https://www.myvendorlink.com/external/award?s=196709&i=510
511	Tractor: Tractor with Boom Mower - 4x4	Massey Ferguson	6S.145 with Diamond Boom Mower	6S.145	https://www.myvendorlink.com/external/award?s=196709&i=511
512	Trailer: Container Chassis Trailer - 73,900 lbs. GVWR	Pitts Trailers	SC40P Chassis Trailer	SC40P	https://www.myvendorlink.com/external/award?s=196709&i=512
513	Trailer: Deck Over Equipment Trailer - 40,000 lbs. GVWR	Behnke	Super Duty Flatbed Trailer	FB8X25SDPT-40L	https://www.myvendorlink.com/external/award?s=196709&i=513
514	Trailer: Deck Over Equipment Trailer - 40,000 lbs. GVWR	Big Tex	4XPH-20+5	4XPH-20+5	https://www.myvendorlink.com/external/award?s=196709&i=514
515	Trailer: Deck Over Equipment Trailer - 40,000 lbs. GVWR	EAGER BEAVER	Eager Beaver 20-XPT Trailer	20XPT	https://www.myvendorlink.com/external/award?s=196709&i=515
516	Trailer: Deck Over Equipment Trailer - 40,000 lbs. GVWR	Econoline	24 Ton Deckover Dovetail	DP2425DA	https://www.myvendorlink.com/external/award?s=196709&i=516
518	Trailer: Deck Over Equipment Trailer - 40,000 lbs. GVWR	Interstate	40DLA	40DLA	https://www.myvendorlink.com/external/award?s=196709&i=518
519	Trailer: Deck Over Equipment Trailer - 40,000 lbs. GVWR	Pitts Trailers	TA-20	TA-20	https://www.myvendorlink.com/external/award?s=196709&i=519
521	Trailer: Deck Over Equipment Trailer - 40,000 lbs. GVWR	Texas Trailers	FB2540GVB	FB2540GVB	https://www.myvendorlink.com/external/award?s=196709&i=521
522	Trailer: Deck Over Equipment Trailer - 40,000 lbs. GVWR	Trail King	TK40LP	TK40LP	https://www.myvendorlink.com/external/award?s=196709&i=522
523	Trailer: Deck Over Flatbed Trailer - 14,000 lbs. GVWR	Big Tex	14PH-25BK+5	14PH-25BK+5	https://www.myvendorlink.com/external/award?s=196709&i=523
524	Trailer: Deck Over Flatbed Trailer - 14,000 lbs. GVWR	Bigfoot Trailers	Super Monster 17.5K Deckover Trailer	Super Monster 17.5K	https://www.myvendorlink.com/external/award?s=196709&i=524
525	Trailer: Deck Over Flatbed Trailer - 14,000 lbs. GVWR	Down 2 Earth	102" X 26' Deckover 16k GVWR	DTE826DO8B	https://www.myvendorlink.com/external/award?s=196709&i=525
526	Trailer: Deck Over Flatbed Trailer - 14,000 lbs. GVWR	Econoline	BP0725DE	BP0725DE	https://www.myvendorlink.com/external/award?s=196709&i=526

527	Trailer: Deck Over Flatbed Trailer - 14,000 lbs. GVWR	Felling	FT-14-2	FT-14-2	https://www.myvendorlink.com/external/award?s=196709&i=527
528	Trailer: Deck Over Flatbed Trailer - 14,000 lbs. GVWR	Interstate	14BST	14BST	https://www.myvendorlink.com/external/award?s=196709&i=528
529	Trailer: Deck Over Flatbed Trailer - 14,000 lbs. GVWR	Maxx-D	I-Beam Deckover Trailer	DOX-16K	https://www.myvendorlink.com/external/award?s=196709&i=529
532	Trailer: Deck Over Flatbed Trailer - 14,000 lbs. GVWR	Texas Trailers	FB3014GVB	FB3014GVB	https://www.myvendorlink.com/external/award?s=196709&i=532
533	Trailer: Deck Over Flatbed Trailer - 14,000 lbs. GVWR	Towmaster	T-16LP	T-16LP	https://www.myvendorlink.com/external/award?s=196709&i=533
534	Trailer: Deck Over Flatbed Trailer - 14,000 lbs. GVWR	Trail King	TK20LP	TK20LP	https://www.myvendorlink.com/external/award?s=196709&i=534
535	Trailer: Detachable Neck Lowboy Trailer - 100,000 lbs. GVWR	EAGER BEAVER	Eager Beaver 50-GSL-3 Lowboy	50-GSL-3	https://www.myvendorlink.com/external/award?s=196709&i=535
536	Trailer: Detachable Neck Lowboy Trailer - 100,000 lbs. GVWR	Felling	XF-100-3 HDG	XF-100-3 HDG	https://www.myvendorlink.com/external/award?s=196709&i=536
537	Trailer: Detachable Neck Lowboy Trailer - 100,000 lbs. GVWR	Pitts Trailers	50-Ton Detach with an 18 Inch Load Deck Height	LB50-18GT	https://www.myvendorlink.com/external/award?s=196709&i=537
538	Trailer: Detachable Neck Lowboy Trailer - 100,000 lbs. GVWR	Pitts Trailers	LB55-22GT	LB55-22GT	https://www.myvendorlink.com/external/award?s=196709&i=538
539	Trailer: Detachable Neck Lowboy Trailer - 100,000 lbs. GVWR	Pitts Trailers	Hydraulic Detachable Trailer	LB51-22DC	https://www.myvendorlink.com/external/award?s=196709&i=539
541	Trailer: Detachable Neck Lowboy Trailer - 100,000 lbs. GVWR	Trail King	TK102HDG	TK102HDG	https://www.myvendorlink.com/external/award?s=196709&i=541
543	Trailer: Enclosed Cargo Trailer - 7,000 lbs. GVWR	ATC	Stō 400	Stō 400	https://www.myvendorlink.com/external/award?s=196709&i=543
544	Trailer: Enclosed Cargo Trailer - 7,000 lbs. GVWR	Cargo Mate	Blazer	BL716TA2	https://www.myvendorlink.com/external/award?s=196709&i=544
545	Trailer: Enclosed Cargo Trailer - 7,000 lbs. GVWR	Express	ECT7X16TA Enclosed Cargo Trailer	ECT7X16TA	https://www.myvendorlink.com/external/award?s=196709&i=545
547	Trailer: Enclosed Cargo Trailer - 7,000 lbs. GVWR	Mission	EZEC7x16	EZEC7x16	https://www.myvendorlink.com/external/award?s=196709&i=547
549	Trailer: Enclosed Cargo Trailer - 7,000 lbs. GVWR	Texas Trailers	7` X 16` Commercial Duty Cargo Trailer	TX7X16TA2	https://www.myvendorlink.com/external/award?s=196709&i=549
550	Trailer: Enclosed Cargo Trailer - 7,000 lbs. GVWR	Wells Cargo	HD Wagon	WHD716T2	https://www.myvendorlink.com/external/award?s=196709&i=550
551	Trailer: Fixed Neck Lowboy Trailer - 70,000 lbs. GVWR	Dorsey Trailers	Fixed Neck Lowboy	LB 35-33CS	https://www.myvendorlink.com/external/award?s=196709&i=551
552	Trailer: Fixed Neck Lowboy Trailer - 70,000 lbs. GVWR	Felling	FT-70-2 MX-L	FT-70-2 MX-L	https://www.myvendorlink.com/external/award?s=196709&i=552
553	Trailer: Fixed Neck Lowboy Trailer - 70,000 lbs. GVWR	Pitts Trailers	35-Ton Fixed Neck Lowboy	LB35-33CS	https://www.myvendorlink.com/external/award?s=196709&i=553
555	Trailer: Flatbed Tilt Trailer - 40,000 lbs. GVWR	Behnke	Tag-Style Flatbed Tilt Trailer	FB8X28TPT-40L	https://www.myvendorlink.com/external/award?s=196709&i=555
556	Trailer: Hydraulic Drop Deck Trailer - 13,500 lbs. GVWR	Air-tow Trailers	Flatbed Model	T14-10	https://www.myvendorlink.com/external/award?s=196709&i=556
557	Trailer: Hydraulic Drop Deck Trailer - 13,500 lbs. GVWR	Triple L Trailers	Hydraulic Drop Deck Flatbed Trailer	1016	https://www.myvendorlink.com/external/award?s=196709&i=557
561	Trailer: Hydraulic Tail Trailer - 70,000 lbs. GVWR	Towmaster	T-70HT	T-70HT	https://www.myvendorlink.com/external/award?s=196709&i=561
562	Trailer: Hydraulic Tail Trailer - 70,000 lbs. GVWR	Trail King	TK80HT	TK80HT	https://www.myvendorlink.com/external/award?s=196709&i=562
563	Trailer: Hydraulic Tail Trailer - 70,000 lbs. GVWR	XL Specialized Trailers	XL 80PT	XL 80PT	https://www.myvendorlink.com/external/award?s=196709&i=563
564	Trailer: Leachate Tanker - 6,500 gallons	MAC Trailer	Stainless Steel Leachate Tank	SRX-6500-1-2-NC	https://www.myvendorlink.com/external/award?s=196709&i=564
565	Trailer: Livestock Trailer - 7,000 lbs. GVWR	Delta Trailers	500ES-16	500ES-16	https://www.myvendorlink.com/external/award?s=196709&i=565
566	Trailer: Livestock Trailer - 7,000 lbs. GVWR	Frontier Trailers	LIV167LITE	LIV167LITE	https://www.myvendorlink.com/external/award?s=196709&i=566
568	Trailer: Mobile Fuel Trailer - 460 gallons	Boss Trailers	590 Gallon Fuel Trailer	FT590052	https://www.myvendorlink.com/external/award?s=196709&i=568
569	Trailer: Mobile Fuel Trailer - 460 gallons	Thunder Creek	EV500 Fuel Trailer	EV500	https://www.myvendorlink.com/external/award?s=196709&i=569
570	Trailer: Multi Tank Fuel/Service 880 gallons Non-Hazmat - 14,000 lbs. GVWR	Thunder Creek	MTT920 Fuel Trailer	MTT920	https://www.myvendorlink.com/external/award?s=196709&i=570
571	Trailer: Pothole Patch Unit - 12,000 lbs. GVWR	Falcon	4-Ton Transporter	4T1B-D	https://www.myvendorlink.com/external/award?s=196709&i=571
572	Trailer: Pothole Patch Unit - 12,000 lbs. GVWR	Stepp Manufacturing	SPHD	SPHD 2.0	https://www.myvendorlink.com/external/award?s=196709&i=572
573	Trailer: Pressure/Vacuum Trailer - 6,000 gallons	MAC Trailer	Stainless Steel Vac Trailer	SRX-6000-1-NC	https://www.myvendorlink.com/external/award?s=196709&i=573
574	Trailer: Pull Behind Dump Trailer - 14,000 lbs. GVWR	American Made Products, Inc.	Dump Trailer	AMP14DP-7T	https://www.myvendorlink.com/external/award?s=196709&i=574
575	Trailer: Pull Behind Dump Trailer - 14,000 lbs. GVWR	Big Tex	14LP-14	14LP-14	https://www.myvendorlink.com/external/award?s=196709&i=575
576	Trailer: Pull Behind Dump Trailer - 14,000 lbs. GVWR	Down 2 Earth	7` X 14` Dump 14k GVWR	DTE714DT7B	https://www.myvendorlink.com/external/award?s=196709&i=576
578	Trailer: Pull Behind Dump Trailer - 14,000 lbs. GVWR	Felling	FT-14 DT HD	FT-14 DT HD	https://www.myvendorlink.com/external/award?s=196709&i=578
579	Trailer: Pull Behind Dump Trailer - 14,000 lbs. GVWR	Maxx-D	I-Beam Dump Trailer	DKX-14K 83"	https://www.myvendorlink.com/external/award?s=196709&i=579
580	Trailer: Pull Behind Dump Trailer - 14,000 lbs. GVWR	Pitts Trailers	7-Ton High Wall Equipment Trailer	TDH7	https://www.myvendorlink.com/external/award?s=196709&i=580
582	Trailer: Pull Behind Dump Trailer - 14,000 lbs. GVWR	Towmaster	T-12HD	T-12HD	https://www.myvendorlink.com/external/award?s=196709&i=582
583	Trailer: Pull Behind Dump Trailer - 14,000 lbs. GVWR	U-Dump	Pro Series	831414LP	https://www.myvendorlink.com/external/award?s=196709&i=583
585	Trailer: Refrigeration/Freezer Trailer - 7,000 lbs. GVWR	American Made Products, Inc.	Cooler Trailer	AMP12CT-3T	https://www.myvendorlink.com/external/award?s=196709&i=585
586	Trailer: Refrigeration/Freezer Trailer - 7,000 lbs. GVWR	Polar King Mobile Trailers	PKM612	PKM612	https://www.myvendorlink.com/external/award?s=196709&i=586
587	Trailer: Restroom Trailer ADA Compliant	Comforts of Home Services, Inc.	3 Station Restroom Trailer	4303NBCA	https://www.myvendorlink.com/external/award?s=196709&i=587
588	Trailer: Restroom Trailer ADA Compliant	UltraLav Trailers	ADA+2 Restroom Trailer	WC20-ADA2	https://www.myvendorlink.com/external/award?s=196709&i=588
589	Trailer: Sludge Trailer - 80,000 lbs. GVWR	East Manufacturing	Genesis	Frame Dump Trailer	https://www.myvendorlink.com/external/award?s=196709&i=589
590	Trailer: Sludge Trailer - 80,000 lbs. GVWR	MAC Trailer	Sludge Trailer	FTEDSP30	https://www.myvendorlink.com/external/award?s=196709&i=590
591	Trailer: Utility/Equipment Trailer - 7,000 lbs. GVWR	Big Tex	70PI-16	70PI-16	https://www.myvendorlink.com/external/award?s=196709&i=591
592	Trailer: Utility/Equipment Trailer - 7,000 lbs. GVWR	Blue Collar Trailers	Utility Trailer	7x16TA2	https://www.myvendorlink.com/external/award?s=196709&i=592
593	Trailer: Utility/Equipment Trailer - 7,000 lbs. GVWR	Down 2 Earth	76" X 16` Landscape/Utility Tandem	DTE7616UT3.5B	https://www.myvendorlink.com/external/award?s=196709&i=593
596	Trailer: Utility/Equipment Trailer - 7,000 lbs. GVWR	Maxx-D	Tandem Axle Utility Trailer	U3X-7K	https://www.myvendorlink.com/external/award?s=196709&i=596
597	Trailer: Utility/Equipment Trailer - 7,000 lbs. GVWR	Mission	MLS6.5X16 2.0	MLS6.5X16 2.0	https://www.myvendorlink.com/external/award?s=196709&i=597
599	Trailer: Utility/Equipment Trailer - 7,000 lbs. GVWR	Texas Trailers	UT61670GV	UT61670GV	https://www.myvendorlink.com/external/award?s=196709&i=599
600	Trailer: Utility/Equipment Trailer - 7,000 lbs. GVWR	Trail King	TK12U	TK12U	https://www.myvendorlink.com/external/award?s=196709&i=600
602	Trailer: Waste Trailer with Walking Floor	MAC Trailer	TNSP48MF	TNSP48MF	https://www.myvendorlink.com/external/award?s=196709&i=602
603	Trailer: Waste Trailer with Walking Floor	Ravens by Kruz Inc.	Ravens Live Floor Aluminum S&P Trailer	RALF-48	https://www.myvendorlink.com/external/award?s=196709&i=603
604	Trailer: Waste Trailer with Walking Floor	Steco	AW048102	AW048102	https://www.myvendorlink.com/external/award?s=196709&i=604
605	Trailer: Waste Trailer with Walking Floor	Travis Trailer	TT/WF Classic	TT/WF Classic 48x102	https://www.myvendorlink.com/external/award?s=196709&i=605
606	Trailer: Waste Trailer with Walking Floor	Warren Equipment Inc.	WMFT-AS	WMFT-AS-48102	https://www.myvendorlink.com/external/award?s=196709&i=606
607	Transfer Switch: 600 Amp Automatic Transfer Switch	ABB	ATS 600A 480V N3R Delayed Transition	TAB600-FS	https://www.myvendorlink.com/external/award?s=196709&i=607
608	Transfer Switch: 600 Amp Automatic Transfer Switch	ASCO	Series 300	Series 300	https://www.myvendorlink.com/external/award?s=196709&i=608
609	Transfer Switch: 600 Amp Automatic Transfer Switch	Caterpillar	CG	CG	https://www.myvendorlink.com/external/award?s=196709&i=609
610	Transfer Switch: 600 Amp Automatic Transfer Switch	EATON	ATS 600A 480V N3R Delayed Transition	TCH600-FS	https://www.myvendorlink.com/external/award?s=196709&i=610
611	Transfer Switch: 600 Amp Automatic Transfer Switch	Generac	TX/PSTS-600	TX/PSTS-600	https://www.myvendorlink.com/external/award?s=196709&i=611

612	Transfer Switch: 600 Amp Automatic Transfer Switch	Thomson	Auto Transfer Switch	TS 870	https://www.myvendorlink.com/external/award?s=196709&i=612
613	Trencher: Tractor Type	Vermeer	Ride-On Trencher	RTX750	https://www.myvendorlink.com/external/award?s=196709&i=613
614	Trencher: Walk Behind Trencher	Vermeer	RTX250	RTX250	https://www.myvendorlink.com/external/award?s=196709&i=614
616	Underground Locating Equipment: Ground Penetrating Radar	US Radar	Quantaum Imager	Q4300	https://www.myvendorlink.com/external/award?s=196709&i=616
617	Underground Locating Equipment: Utility Locator	Vermeer	Verifier G-3	G-3	https://www.myvendorlink.com/external/award?s=196709&i=617
619	Vehicle Lift: Above Ground - 2 Post Asymmetric Stationary Vehicle Lift 10k	Challenger	SA10	SA10	https://www.myvendorlink.com/external/award?s=196709&i=619
621	Vehicle Lift: Above Ground - 2 Post Symmetric Stationary Vehicle Lift 12k	Challenger	CL12A-LC	CL12A-LC	https://www.myvendorlink.com/external/award?s=196709&i=621
622	Vehicle Lift: Above Ground - 2 Post Symmetric Stationary Vehicle Lift 15k	Challenger	CL16-3S	CL16-3S	https://www.myvendorlink.com/external/award?s=196709&i=622
625	Vehicle Lift: Above Ground - 2 Post Symmetric Stationary Vehicle Lift 18k	Challenger	CL20	CL20	https://www.myvendorlink.com/external/award?s=196709&i=625
628	Vehicle Lift: Above Ground - 2 Post Versymmetric Stationary Vehicle Lift 10k	Challenger	CL10V3	CL10V3	https://www.myvendorlink.com/external/award?s=196709&i=628
629	Vehicle Lift: Above Ground - 4 Column, Alignment Lift with Front/Rear Jacks and Integrated Turntables and Slip Plates 14k	Challenger	AR4115XAO	AR4115XAO	https://www.myvendorlink.com/external/award?s=196709&i=629
631	Vehicle Lift: Above Ground - 4 Post Alignment Lift with Turnplates and Rolling Jack 30k	Challenger	4030 Series	4030EFX	https://www.myvendorlink.com/external/award?s=196709&i=631
633	Vehicle Lift: Above Ground Drive On Platform Lift, Pantograph Type	ARI-HETRA	HDPL Drive-On Platform Lift	HDPL-77-30	https://www.myvendorlink.com/external/award?s=196709&i=633
634	Vehicle Lift: In Ground Drive On Platform Lift, Scissor Type	ARI-HETRA	HDXL Drive-On Scissor Lift	HDXL-912	https://www.myvendorlink.com/external/award?s=196709&i=634
635	Vehicle Lift: Mobile - 2 Column, Cabled	ARI-HETRA	LP-10-2-AJ	LP-10-2-AJ	https://www.myvendorlink.com/external/award?s=196709&i=635
636	Vehicle Lift: Mobile - 2 Column, Cabled	Stertil-Koni	ST-1085-1FSA	ST-1085-1FSA	https://www.myvendorlink.com/external/award?s=196709&i=636
637	Vehicle Lift: Mobile - 2 Column, Wireless	ARI-HETRA	BPW-10-2-AJ	BPW-10-2-AJ	https://www.myvendorlink.com/external/award?s=196709&i=637
638	Vehicle Lift: Mobile - 2 Column, Wireless	Challenger	CLHM-190-2	CLHM-190-2	https://www.myvendorlink.com/external/award?s=196709&i=638
639	Vehicle Lift: Mobile - 2 Column, Wireless	Stertil-Koni	ST-1085-1FWA	ST-1085-1FWA	https://www.myvendorlink.com/external/award?s=196709&i=639
640	Vehicle Lift: Mobile - 4 Column, Cabled	ARI-HETRA	LP-10-4-AJ	LP-10-4-AJ	https://www.myvendorlink.com/external/award?s=196709&i=640
641	Vehicle Lift: Mobile - 4 Column, Cabled	Stertil-Koni	ST-1085-2FSA	ST-1085-2FSA	https://www.myvendorlink.com/external/award?s=196709&i=641
642	Vehicle Lift: Mobile - 4 Column, Wireless	ARI-HETRA	BPW-10-4-AJ	BPW-10-4-AJ	https://www.myvendorlink.com/external/award?s=196709&i=642
643	Vehicle Lift: Mobile - 4 Column, Wireless	Challenger	CLHM-190-4	CLHM-190-4	https://www.myvendorlink.com/external/award?s=196709&i=643
644	Vehicle Lift: Mobile - 4 Column, Wireless	Stertil-Koni	ST-1085-2FWA	ST-1085-2FWA	https://www.myvendorlink.com/external/award?s=196709&i=644
645	Vehicle Lift: Mobile - 6 Column, Cabled	ARI-HETRA	LP-10-6-AJ	LP-10-6-AJ	https://www.myvendorlink.com/external/award?s=196709&i=645
646	Vehicle Lift: Mobile - 6 Column, Cabled	Stertil-Koni	ST-1085-3FSA	ST-1085-3FSA	https://www.myvendorlink.com/external/award?s=196709&i=646
647	Vehicle Lift: Mobile - 6 Column, Wireless	ARI-HETRA	BPW-10-6-AJ	BPW-10-6-AJ	https://www.myvendorlink.com/external/award?s=196709&i=647
648	Vehicle Lift: Mobile - 6 Column, Wireless	Challenger	CLHM-190-6	CLHM-190-6	https://www.myvendorlink.com/external/award?s=196709&i=648
649	Vehicle Lift: Mobile - 6 Column, Wireless	Stertil-Koni	ST-1085-3FWA	ST-1085-3FWA	https://www.myvendorlink.com/external/award?s=196709&i=649
650	Vehicle Lift: Mobile - 8 Column, Wireless	ARI-HETRA	BPW-10-8-AJ	BPW-10-8-AJ	https://www.myvendorlink.com/external/award?s=196709&i=650
651	Vehicle Lift: Mobile - 8 Column, Wireless	Challenger	CLHM-190-8	CLHM-190-8	https://www.myvendorlink.com/external/award?s=196709&i=651
652	Bulldozer: 90hp	Hyundai	HD100LGP	HD100LGP	https://www.myvendorlink.com/external/award?s=196709&i=652
653	Dump Truck: Articulating Off Road Dump Truck - 50,000 lbs. Payload	Hyundai	HA30	HA30	https://www.myvendorlink.com/external/award?s=196709&i=653
654	Excavator: Wheeled Hydraulic Excavator - 42,000 lbs. Operating Weight	Hyundai	HW210A	HW210A	https://www.myvendorlink.com/external/award?s=196709&i=654
655	Lift: Articulated Boom Lift - Self Propelled Tracked	JLG	X500AJ	X500AJ	https://www.myvendorlink.com/external/award?s=196709&i=655
656	Loader: Mini Skid Steer - 1,000 lbs. Operating Capacity - Tracked Type, Stand Up Operator	Wacker Neuson	Utility Track Loader	SM100	https://www.myvendorlink.com/external/award?s=196709&i=656
657	Pipe Inspection: External Power Pipe Crawler Inspection System	Envirosight	Rovver X	Rovver X	https://www.myvendorlink.com/external/award?s=196709&i=657
658	Pipe Inspection: External Power Pipe Crawler Inspection System	Minicam	ACR HD	ACR HD	https://www.myvendorlink.com/external/award?s=196709&i=658
659	Portable Signal: Portable Signal - Trailer Mounted	Ver-Mac	TLD-3612-G3	TLD-3612-G3	https://www.myvendorlink.com/external/award?s=196709&i=659
660	Roller: Compact 2,900 lbs. - Double Drum Roller - 38in. Width	Caterpillar	CB1.8	CB1.8	https://www.myvendorlink.com/external/award?s=196709&i=660
661	Roller: Compact, Pneumatic Asphalt Roller	Weiler	CT3A	CT3A	https://www.myvendorlink.com/external/award?s=196709&i=661
662	Security Camera: Security Camera Tower - Trailer Mounted	Ver-Mac	CT-2430	CT-2430	https://www.myvendorlink.com/external/award?s=196709&i=662
663	Sewer Cleaner: Easement Machine	Vactor	Ace	Ace	https://www.myvendorlink.com/external/award?s=196709&i=663
664	Sweeper: Vacuum Street Sweeper	Elgin	Whirlwind	Whirlwind	https://www.myvendorlink.com/external/award?s=196709&i=664
665	Sweeper: Walk Behind Floor Sweeper/Scrubber	Advance by Nilfisk	SC750 26D	56112395	https://www.myvendorlink.com/external/award?s=196709&i=665
666	Sweeper: Walk Behind Floor Sweeper/Scrubber	Kärcher	BD 70/75 W BB Classic	BD 70/75 W BB Classic	https://www.myvendorlink.com/external/award?s=196709&i=666
667	Trailer: Deck Over Equipment Trailer - 40,000 lbs. GVWR	Towmaster	T-40LP	T-40LP	https://www.myvendorlink.com/external/award?s=196709&i=667
668	Trailer: Deck Over Flatbed Trailer - 14,000 lbs. GVWR	Kaufman	17,000 GVWR Deluxe Flatbed Trailer – 22ft	FP-8K-22D	https://www.myvendorlink.com/external/award?s=196709&i=668
669	Trailer: Detachable Neck Lowboy Trailer - 100,000 lbs. GVWR	Kaufman	50 Ton Detachable Gooseneck Air Ride Trailer – Standard	FRDT50-24-24-A-54-00-N	https://www.myvendorlink.com/external/award?s=196709&i=669
670	Trailer: Detachable Neck Lowboy Trailer - 100,000 lbs. GVWR	Towmaster	T-100DTG	T-100DTG	https://www.myvendorlink.com/external/award?s=196709&i=670
671	Trailer: Enclosed Cargo Trailer - 7,000 lbs. GVWR	Kaufman	7,000 GVWR – 7' Wide Tandem Axle Cargo Trailer – Deluxe	FEN-2/3.5K-7X16D	https://www.myvendorlink.com/external/award?s=196709&i=671
672	Trailer: Fixed Neck Lowboy Trailer - 70,000 lbs. GVWR	Towmaster	T-70RG	T-70RG	https://www.myvendorlink.com/external/award?s=196709&i=672
673	Trailer: Flatbed Tilt Trailer - 40,000 lbs. GVWR	Econoline	Dual Tandem 20-Ton Tilt	DP2029TA	https://www.myvendorlink.com/external/award?s=196709&i=673
674	Trailer: Flatbed Tilt Trailer - 40,000 lbs. GVWR	Interstate	40TDL	40TDL	https://www.myvendorlink.com/external/award?s=196709&i=674
675	Trailer: Flatbed Tilt Trailer - 40,000 lbs. GVWR	Towmaster	T-40 T	T-40 T	https://www.myvendorlink.com/external/award?s=196709&i=675
676	Trailer: Hydraulic Drop Deck Trailer - 13,500 lbs. GVWR	Felling	FT-12 EZ-T	FT-12 EZ-T	https://www.myvendorlink.com/external/award?s=196709&i=676
677	Trailer: Multi Tank Fuel/Service 880 gallons Non-Hazmat - 14,000 lbs. GVWR	Boss Trailers	Non-Hazmat 880 Gallon Multi Tank Fuel Trailer	MT880072	https://www.myvendorlink.com/external/award?s=196709&i=677
678	Trailer: Pull Behind Dump Trailer - 14,000 lbs. GVWR	Kaufman	14,000 GVWR Standard Medium Duty Dump Trailer – 14ft x 80in	FXHLP-7K-14S	https://www.myvendorlink.com/external/award?s=196709&i=678
679	Trailer: Sludge Trailer - 80,000 lbs. GVWR	Ravens by Kruz Inc.	Aluminum S&P Dump Trailer	RFA-30-SF	https://www.myvendorlink.com/external/award?s=196709&i=679
680	Trailer: Sludge Trailer - 80,000 lbs. GVWR	Warren Equipment Inc.	WRDT-AS	WRDT-AS	https://www.myvendorlink.com/external/award?s=196709&i=680
681	Trailer: Sludge Trailer - 80,000 lbs. GVWR	Travis Trailer	Sludge 30ft. Classic S-96	Sludge 30ft. Classic S-96	https://www.myvendorlink.com/external/award?s=196709&i=681
682	Trailer: Utility/Equipment Trailer - 7,000 lbs. GVWR	Kaufman	Standard Landscape Utility Trailer 7,000 GVWR – 16ft	FB-3.5K-16S	https://www.myvendorlink.com/external/award?s=196709&i=682

FSA Cooperative Purchasing Program



FSA26-EQU24.0: Equipment
Final Award Report

Bid Award

Contract: FSA26-EQU24.0, Equipment

Group: All Terrain & Utility Vehicles: All Terrain Vehicles (Quad)

Item: 1, CanAm, Outlander, 500

Description: Refer FSA Base Specifications PDF document.

Model Upgrade/Downgrade:

Zone	Rank	Vendor	Price	Build File	Options File
Western	Primary	McKibben Powersports Inc.	$7,670.00	Build	Options
	Alternate	Ameri-Recreational Sports, LLC	$7,700.00	Build	Options
Northern	Primary	Ameri-Recreational Sports, LLC	$7,300.00	Build	Options
	Alternate	McKibben Powersports Inc.	$7,470.00	Build	Options
Central	Primary	Ameri-Recreational Sports, LLC	$7,100.00	Build	Options
	Alternate	McKibben Powersports Inc.	$7,217.00	Build	Options
Southern	Primary	Ameri-Recreational Sports, LLC	$7,100.00	Build	Options
	Alternate	McKibben Powersports Inc.	$7,217.00	Build	Options

Bid Award

Contract: FSA26-EQU24.0, Equipment

Group: All Terrain & Utility Vehicles: All Terrain Vehicles (Quad)

Item: 2, CFMOTO, CFORCE 500, CFORCE 500

Description: Refer FSA Base Specifications PDF document.

Model Upgrade/Downgrade:

Zone	Rank	Vendor	Price	Build File	Options File
Western	Primary	Ameri-Recreational Sports, LLC	$6,300.00	Build	Options
	Alternate	Love Power Equipment, Inc	$7,700.00	Build	Options
Northern	Primary	Ameri-Recreational Sports, LLC	$5,900.00	Build	Options
	Alternate	Love Power Equipment, Inc	$7,599.00	Build	Options
Central	Primary	Ameri-Recreational Sports, LLC	$5,700.00	Build	Options
	Alternate	Love Power Equipment, Inc	$7,599.00	Build	Options
Southern	Primary	Ameri-Recreational Sports, LLC	$5,700.00	Build	Options
	Alternate	Love Power Equipment, Inc	$7,700.00	Build	Options

Bid Award

Contract: FSA26-EQU24.0, Equipment

Group: All Terrain & Utility Vehicles: All Terrain Vehicles (Quad)

Item: 3, Honda, Rancher 420, TRX420FA6

Description: Refer FSA Base Specifications PDF document.

Model Upgrade/Downgrade:

Zone	Rank	Vendor	Price	Build File	Options File
Western	Primary	McKibben Powersports Inc.	$8,444.00	Build	Options
	Alternate	Ameri-Recreational Sports, LLC	$9,100.00	Build	Options
Northern	Primary	McKibben Powersports Inc.	$8,270.00	Build	Options
	Alternate	Ameri-Recreational Sports, LLC	$8,700.00	Build	Options
Central	Primary	McKibben Powersports Inc.	$7,943.00	Build	Options
	Alternate	Ameri-Recreational Sports, LLC	$8,500.00	Build	Options
Southern	Primary	McKibben Powersports Inc.	$7,943.00	Build	Options
	Alternate	Ameri-Recreational Sports, LLC	$8,500.00	Build	Options

Bid Award

Contract: FSA26-EQU24.0, Equipment

Group: All Terrain & Utility Vehicles: All Terrain Vehicles (Quad)

Item: 4, Honda, Rubicon 520, TRX520FA6

Description: Refer FSA Base Specifications PDF document.

Model Upgrade/Downgrade:

Zone	Rank	Vendor	Price	Build File	Options File
Western	Primary Alternate	McKibben Powersports Inc. Ameri-Recreational Sports, LLC	$9,573.00 $10,400.00	Build Build	Options Options
Northern	Primary Alternate	McKibben Powersports Inc. Ameri-Recreational Sports, LLC	$9,273.00 $10,000.00	Build Build	Options Options
Central	Primary Alternate	McKibben Powersports Inc. Ameri-Recreational Sports, LLC	$8,972.00 $9,800.00	Build Build	Options Options
Southern	Primary Alternate	McKibben Powersports Inc. Ameri-Recreational Sports, LLC	$8,972.00 $9,800.00	Build Build	Options Options

Bid Award

Contract: FSA26-EQU24.0, Equipment

Group: All Terrain & Utility Vehicles: All Terrain Vehicles (Quad)

Item: 5, Polaris, Sportsman 500, A27SBA50B1

Description: Refer FSA Base Specifications PDF document.

Model Upgrade/Downgrade:

Zone	Rank	Vendor	Price	Build File	Options File
Western	Primary	McKibben Powersports Inc.	$7,211.00	Build	Options
	Alternate	Love Power Equipment, Inc	$7,299.00	Build	Options
	Alternate	Ameri-Recreational Sports, LLC	$7,500.00	Build	Options
Northern	Primary	McKibben Powersports Inc.	$6,911.00	Build	Options
	Alternate	Ameri-Recreational Sports, LLC	$7,100.00	Build	Options
	Alternate	Love Power Equipment, Inc	$7,100.00	Build	Options
Central	Primary	McKibben Powersports Inc.	$6,610.00	Build	Options
	Alternate	Love Power Equipment, Inc	$6,800.00	Build	Options
	Alternate	Ameri-Recreational Sports, LLC	$6,900.00	Build	Options
Southern	Primary	McKibben Powersports Inc.	$6,610.00	Build	Options
	Alternate	Ameri-Recreational Sports, LLC	$6,900.00	Build	Options
	Alternate	Love Power Equipment, Inc	$7,299.00	Build	Options

Bid Award

Contract: FSA26-EQU24.0, Equipment

Group: All Terrain & Utility Vehicles: All Terrain Vehicles (Quad)

Item: 6, Polaris, Sportsman 600, A27SEA57A1

Description: Refer FSA Base Specifications PDF document.

Model Upgrade/Downgrade:

Zone	Rank	Vendor	Price	Build File	Options File
Western	Primary	Love Power Equipment, Inc	$8,000.00	Build	Options
	Alternate	McKibben Powersports Inc.	$8,045.00	Build	Options
	Alternate	Ameri-Recreational Sports, LLC	$8,400.00	Build	Options
Northern	Primary	McKibben Powersports Inc.	$7,745.00	Build	Options
	Alternate	Love Power Equipment, Inc	$7,800.00	Build	Options
	Alternate	Ameri-Recreational Sports, LLC	$8,000.00	Build	Options
Central	Primary	McKibben Powersports Inc.	$7,444.00	Build	Options
	Alternate	Ameri-Recreational Sports, LLC	$7,800.00	Build	Options
	Alternate	Love Power Equipment, Inc	$7,800.00	Build	Options
Southern	Primary	McKibben Powersports Inc.	$7,444.00	Build	Options
	Alternate	Ameri-Recreational Sports, LLC	$7,800.00	Build	Options
	Alternate	Love Power Equipment, Inc	$8,000.00	Build	Options

Bid Award

Contract: FSA26-EQU24.0, Equipment

Group: All Terrain & Utility Vehicles: All Terrain Vehicles (Quad)

Item: 7, Suzuki, King Quad 400 ASI, LTA400FM7

Description: Refer FSA Base Specifications PDF document.

Model Upgrade/Downgrade:

Zone	Rank	Vendor	Price	Build File	Options File
Western	Primary	McKibben Powersports Inc.	$7,158.00	Build	Options
	Alternate	Love Power Equipment, Inc	$7,300.00	Build	Options
	Alternate	DELAND MOTORSPORTS	$7,610.00	Build	
Northern	Primary	McKibben Powersports Inc.	$6,758.00	Build	Options
	Alternate	Love Power Equipment, Inc	$7,100.00	Build	Options
	Alternate	DELAND MOTORSPORTS	$7,610.00	Build	
Central	Primary	McKibben Powersports Inc.	$6,458.00	Build	Options
	Alternate	Love Power Equipment, Inc	$7,100.00	Build	Options
	Alternate	DELAND MOTORSPORTS	$7,310.00	Build	
Southern	Primary	McKibben Powersports Inc.	$6,458.00	Build	Options
	Alternate	Love Power Equipment, Inc	$7,300.00	Build	Options
	Alternate	DELAND MOTORSPORTS	$7,310.00	Build	

Bid Award

Contract: FSA26-EQU24.0, Equipment

Group: All Terrain & Utility Vehicles: All Terrain Vehicles (Quad)

Item: 8, Yamaha, Kodiac 450, YFM45KDXVG

Description: Refer FSA Base Specifications PDF document.

Model Upgrade/Downgrade:

Zone	Rank	Vendor	Price	Build File	Options File
Western	Primary	Ameri-Recreational Sports, LLC	$7,200.00	Build	Options
	Alternate	McKibben Powersports Inc.	$7,283.00	Build	Options
Northern	Primary	Ameri-Recreational Sports, LLC	$6,800.00	Build	Options
	Alternate	McKibben Powersports Inc.	$6,883.00	Build	Options
Central	Primary	McKibben Powersports Inc.	$6,582.00	Build	Options
	Alternate	Ameri-Recreational Sports, LLC	$6,600.00	Build	Options
Southern	Primary	McKibben Powersports Inc.	$6,582.00	Build	Options
	Alternate	Ameri-Recreational Sports, LLC	$6,600.00	Build	Options

Bid Award

Contract: FSA26-EQU24.0, Equipment

Group: All Terrain & Utility Vehicles: Electric Utility Vehicles (Side-by-Side)

Item: 9, Columbia, Utilitruck, Utilitruck

Description: Refer FSA Base Specifications PDF document.

Model Upgrade/Downgrade:

Zone	Rank	Vendor	Price	Build File	Options File
Western	Primary	Southern States ToyotaLift	$22,030.00	Build	Options
Northern	Primary	Southern States ToyotaLift	$22,030.00	Build	Options
Central	Primary	Southern States ToyotaLift	$22,030.00	Build	Options
Southern	Primary	Southern States ToyotaLift	$22,030.00	Build	Options

Bid Award

Contract: FSA26-EQU24.0, Equipment

Group: All Terrain & Utility Vehicles: Electric Utility Vehicles (Side-by-Side)

Item: 13, Landmaster, Amp, CA00143

Description: Refer FSA Base Specifications PDF document.

Model Upgrade/Downgrade:

Zone	Rank	Vendor	Price	Build File	Options File
Western	Primary	Love Power Equipment, Inc	$17,099.00	Build	Options
	Alternate	Segway of Central Florida	$18,494.00	Build	Options
Northern	Primary	Segway of Central Florida	$16,919.00	Build	Options
	Alternate	Love Power Equipment, Inc	$17,099.00	Build	Options
Central	Primary	Love Power Equipment, Inc	$16,599.00	Build	Options
	Alternate	Segway of Central Florida	$16,894.00	Build	Options
Southern	Primary	Love Power Equipment, Inc	$17,099.00	Build	Options
	Alternate	Segway of Central Florida	$18,444.00	Build	Options

Bid Award

Contract: FSA26-EQU24.0, Equipment

Group: All Terrain & Utility Vehicles: Utility Vehicles (Side-by-Side)

Item: 14, Bobcat, UV34, UV34

Description: Refer FSA Base Specifications PDF document.

Model Upgrade/Downgrade:

Zone	Rank	Vendor	Price	Build File	Options File
Western	Primary	Doosan Bobcat North America, Inc.	$17,346.00	Build	Options
Northern	Primary	Doosan Bobcat North America, Inc.	$17,346.00	Build	Options
Central	Primary	Doosan Bobcat North America, Inc.	$17,346.00	Build	Options
Southern	Primary	Doosan Bobcat North America, Inc.	$17,346.00	Build	Options

Bid Award

Contract: FSA26-EQU24.0, Equipment

Group: All Terrain & Utility Vehicles: Utility Vehicles (Side-by-Side)

Item: 15, Bobcat, UW56, UW56

Description: Refer FSA Base Specifications PDF document.

Model Upgrade/Downgrade:

Zone	Rank	Vendor	Price	Build File	Options File
Western	Primary	Doosan Bobcat North America, Inc.	$67,558.00	Build	Options
Northern	Primary	Doosan Bobcat North America, Inc.	$67,558.00	Build	Options
Central	Primary	Doosan Bobcat North America, Inc.	$67,558.00	Build	Options
Southern	Primary	Doosan Bobcat North America, Inc.	$67,558.00	Build	Options

Bid Award

Contract: FSA26-EQU24.0, Equipment

Group: All Terrain & Utility Vehicles: Utility Vehicles (Side-by-Side)

Item: 16, CanAm, Defender, HD7

Description: Refer FSA Base Specifications PDF document.

Model Upgrade/Downgrade:

Zone	Rank	Vendor	Price	Build File	Options File
Western	Primary	McKibben Powersports Inc.	$12,626.00	Build	Options
	Alternate	Ameri-Recreational Sports, LLC	$13,200.00	Build	Options
Northern	Primary	McKibben Powersports Inc.	$12,426.00	Build	Options
	Alternate	Ameri-Recreational Sports, LLC	$12,800.00	Build	Options
Central	Primary	McKibben Powersports Inc.	$12,126.00	Build	Options
	Alternate	Ameri-Recreational Sports, LLC	$12,600.00	Build	Options
Southern	Primary	McKibben Powersports Inc.	$12,126.00	Build	Options
	Alternate	Ameri-Recreational Sports, LLC	$12,600.00	Build	Options

Bid Award

Contract: FSA26-EQU24.0, Equipment

Group: All Terrain & Utility Vehicles: Utility Vehicles (Side-by-Side)

Item: 17, CFMOTO, UFORCE 600, UFORCE 600

Description: Refer FSA Base Specifications PDF document.

Model Upgrade/Downgrade:

Zone	Rank	Vendor	Price	Build File	Options File
Western	Primary Alternate	Ameri-Recreational Sports, LLC Love Power Equipment, Inc	$10,100.00 $12,100.00	Build Build	Options Options
Northern	Primary Alternate	Ameri-Recreational Sports, LLC Love Power Equipment, Inc	$9,700.00 $11,900.00	Build Build	Options Options
Central	Primary Alternate	Ameri-Recreational Sports, LLC Love Power Equipment, Inc	$9,500.00 $11,900.00	Build Build	Options Options
Southern	Primary Alternate	Ameri-Recreational Sports, LLC Love Power Equipment, Inc	$9,500.00 $12,100.00	Build Build	Options Options

Bid Award

Contract: FSA26-EQU24.0, Equipment

Group: All Terrain & Utility Vehicles: Utility Vehicles (Side-by-Side)

Item: 18, Honda, Pioneer 520, SXS520M2

Description: Refer FSA Base Specifications PDF document.

Model Upgrade/Downgrade:

Zone	Rank	Vendor	Price	Build File	Options File
Western	Primary	McKibben Powersports Inc.	$10,292.00	Build	Options
	Alternate	Love Power Equipment, Inc	$10,850.00	Build	Options
	Alternate	Ameri-Recreational Sports, LLC	$11,200.00	Build	Options
Northern	Primary	McKibben Powersports Inc.	$9,992.00	Build	Options
	Alternate	Love Power Equipment, Inc	$10,650.00	Build	Options
	Alternate	Ameri-Recreational Sports, LLC	$10,800.00	Build	Options
Central	Primary	McKibben Powersports Inc.	$9,553.00	Build	Options
	Alternate	Ameri-Recreational Sports, LLC	$10,600.00	Build	Options
	Alternate	Love Power Equipment, Inc	$10,650.00	Build	Options
Southern	Primary	McKibben Powersports Inc.	$9,553.00	Build	Options
	Alternate	Ameri-Recreational Sports, LLC	$10,600.00	Build	Options
	Alternate	Love Power Equipment, Inc	$10,850.00	Build	Options

Bid Award

Contract: FSA26-EQU24.0, Equipment

Group: All Terrain & Utility Vehicles: Utility Vehicles (Side-by-Side)

Item: 19, Honda, Pioneer 700, SXS700M2M

Description: Refer FSA Base Specifications PDF document.

Model Upgrade/Downgrade:

Zone	Rank	Vendor	Price	Build File	Options File
Western	Primary	McKibben Powersports Inc.	$11,941.00	Build	Options
	Alternate	Ameri-Recreational Sports, LLC	$13,000.00	Build	Options
	Alternate	Love Power Equipment, Inc	$13,400.00	Build	Options
Northern	Primary	McKibben Powersports Inc.	$11,641.00	Build	Options
	Alternate	Ameri-Recreational Sports, LLC	$12,600.00	Build	Options
	Alternate	Love Power Equipment, Inc	$13,100.00	Build	Options
Central	Primary	McKibben Powersports Inc.	$11,241.00	Build	Options
	Alternate	Ameri-Recreational Sports, LLC	$12,400.00	Build	Options
	Alternate	Love Power Equipment, Inc	$13,100.00	Build	Options
Southern	Primary	McKibben Powersports Inc.	$11,241.00	Build	Options
	Alternate	Ameri-Recreational Sports, LLC	$12,400.00	Build	Options
	Alternate	Love Power Equipment, Inc	$13,400.00	Build	Options

Bid Award

Contract: FSA26-EQU24.0, Equipment

Group: All Terrain & Utility Vehicles: Utility Vehicles (Side-by-Side)

Item: 20, John Deere, Gator, HPX615E

Description: Refer FSA Base Specifications PDF document.

Model Upgrade/Downgrade:

Zone	Rank	Vendor	Price	Build File	Options File
Western	Primary	Everglades Equipment Group	$14,950.00	Build	Options
Northern	Primary	Everglades Equipment Group	$14,950.00	Build	Options
Central	Primary	Everglades Equipment Group	$14,950.00	Build	Options
Southern	Primary	Everglades Equipment Group	$14,950.00	Build	Options

Bid Award

Contract: FSA26-EQU24.0, Equipment

Group: All Terrain & Utility Vehicles: Utility Vehicles (Side-by-Side)

Item: 21, Kawasaki, Mule 4x4, 4010

Description: Refer FSA Base Specifications PDF document.

Model Upgrade/Downgrade:

Zone	Rank	Vendor	Price	Build File	Options File
Western	Primary	McKibben Powersports Inc.	$11,137.00	Build	Options
	Alternate	Ameri-Recreational Sports, LLC	$11,800.00	Build	Options
Northern	Primary	McKibben Powersports Inc.	$10,937.00	Build	Options
	Alternate	Ameri-Recreational Sports, LLC	$11,400.00	Build	Options
Central	Primary	McKibben Powersports Inc.	$10,637.00	Build	Options
	Alternate	Ameri-Recreational Sports, LLC	$11,200.00	Build	Options
Southern	Primary	McKibben Powersports Inc.	$10,637.00	Build	Options
	Alternate	Ameri-Recreational Sports, LLC	$11,200.00	Build	Options

Bid Award

Contract: FSA26-EQU24.0, Equipment

Group: All Terrain & Utility Vehicles: Utility Vehicles (Side-by-Side)

Item: 22, Kubota, RTVX2, RTVX2-BKH-1

Description: Refer FSA Base Specifications PDF document.

Model Upgrade/Downgrade:

Zone	Rank	Vendor	Price	Build File	Options File
Western	Primary	Creel Tractor Company	$16,029.00	Build	Options
Northern	Primary Alternate	Creel Tractor Company Florida Coast Equipment, Inc.	$15,929.00 $15,970.00	Build Build	Options Options
Central	Primary Alternate	Creel Tractor Company Florida Coast Equipment, Inc.	$15,629.00 $15,970.00	Build Build	Options Options
Southern	Primary Alternate	Creel Tractor Company Florida Coast Equipment, Inc.	$15,379.00 $15,970.00	Build Build	Options Options

Bid Award

Contract: FSA26-EQU24.0, Equipment

Group: All Terrain & Utility Vehicles: Utility Vehicles (Side-by-Side)

Item: 23, Landmaster, N7, CA00135

Description: Refer FSA Base Specifications PDF document.

Model Upgrade/Downgrade:

Zone	Rank	Vendor	Price	Build File	Options File
Western	Primary Alternate	Love Power Equipment, Inc Segway of Central Florida	$11,499.00 $13,174.00	Build Build	Options Options
Northern	Primary Alternate	Love Power Equipment, Inc Segway of Central Florida	$11,499.00 $11,599.00	Build Build	Options Options
Central	Primary Alternate	Love Power Equipment, Inc Segway of Central Florida	$11,499.00 $11,574.00	Build Build	Options Options
Southern	Primary Alternate	Love Power Equipment, Inc Segway of Central Florida	$11,499.00 $13,124.00	Build Build	Options Options

Bid Award

Contract: FSA26-EQU24.0, Equipment

Group: All Terrain & Utility Vehicles: Utility Vehicles (Side-by-Side)

Item: 25, Polaris, Pro XD Mid-Size, D27M2A57B4

Description: Refer FSA Base Specifications PDF document.

Model Upgrade/Downgrade:

Zone	Rank	Vendor	Price	Build File	Options File
Western	Primary	Love Power Equipment, Inc	$14,100.00	Build	Options
	Alternate	McKibben Powersports Inc.	$14,101.00	Build	Options
Northern	Primary	Love Power Equipment, Inc	$13,999.00	Build	Options
	Alternate	McKibben Powersports Inc.	$14,072.00	Build	Options
Central	Primary	McKibben Powersports Inc.	$13,843.00	Build	Options
	Alternate	Love Power Equipment, Inc	$13,999.00	Build	Options
Southern	Primary	McKibben Powersports Inc.	$13,843.00	Build	Options
	Alternate	Love Power Equipment, Inc	$14,100.00	Build	Options

Bid Award

Contract: FSA26-EQU24.0, Equipment

Group: All Terrain & Utility Vehicles: Utility Vehicles (Side-by-Side)

Item: 26, Polaris, Ranger 600, R27MAA57B8

Description: Refer FSA Base Specifications PDF document.

Model Upgrade/Downgrade:

Zone	Rank	Vendor	Price	Build File	Options File
Western	Primary	McKibben Powersports Inc.	$10,932.00	Build	Options
	Alternate	Love Power Equipment, Inc	$11,800.00	Build	Options
	Alternate	Ameri-Recreational Sports, LLC	$12,100.00	Build	Options
Northern	Primary	McKibben Powersports Inc.	$10,732.00	Build	Options
	Alternate	Love Power Equipment, Inc	$11,500.00	Build	Options
	Alternate	Ameri-Recreational Sports, LLC	$11,700.00	Build	Options
Central	Primary	McKibben Powersports Inc.	$10,432.00	Build	Options
	Alternate	Ameri-Recreational Sports, LLC	$11,500.00	Build	Options
	Alternate	Love Power Equipment, Inc	$11,500.00	Build	Options
Southern	Primary	McKibben Powersports Inc.	$10,432.00	Build	Options
	Alternate	Ameri-Recreational Sports, LLC	$11,500.00	Build	Options
	Alternate	Love Power Equipment, Inc	$11,800.00	Build	Options

Bid Award

Contract: FSA26-EQU24.0, Equipment

Group: Blower: Ride On Blower

Item: 28, Scag, Windstorm, WS23-37BV-EFI

Description: Refer FSA Base Specifications PDF document.

Model Upgrade/Downgrade:

Zone	Rank	Vendor	Price	Build File	Options File
Western	Primary	Green Thumb Palm Beach	$12,792.00	Build	Options
Northern	Primary	Green Thumb Palm Beach	$11,617.00	Build	Options
Central	Primary	Green Thumb Palm Beach	$11,517.00	Build	Options
Southern	Primary	Green Thumb Palm Beach	$11,192.00	Build	Options

Bid Award

Contract: FSA26-EQU24.0, Equipment

Group: Bulldozer: 180hp

Item: 32, Case, 2050M, 2050M

Description: Refer FSA Base Specifications PDF document.

Model Upgrade/Downgrade:

Zone	Rank	Vendor	Price	Build File	Options File
Western	Primary	Innovative Equipment Services 2 LLC CASE Power & Equipment of Florida	$512,201.00	Build	Options
Northern	Primary	Innovative Equipment Services 2 LLC CASE Power & Equipment of Florida	$512,201.00	Build	Options
Central	Primary	Innovative Equipment Services 2 LLC CASE Power & Equipment of Florida	$512,201.00	Build	Options
Southern	Primary	Innovative Equipment Services 2 LLC CASE Power & Equipment of Florida	$512,201.00	Build	Options

Bid Award

Contract: FSA26-EQU24.0, Equipment

Group: Bulldozer: 180hp

Item: 33, Caterpillar, D6, D6

Description: Refer FSA Base Specifications PDF document.

Model Upgrade/Downgrade:

Zone	Rank	Vendor	Price	Build File	Options File
Western	Primary	Ring Power Corporation	$516,012.00	Build	Options
Northern	Primary	Ring Power Corporation	$516,012.00	Build	Options
Central	Primary	Ring Power Corporation	$516,012.00	Build	Options
Southern	Primary	Kelly Tractor Co	$480,770.00	Build	Options

Bid Award

Contract: FSA26-EQU24.0, Equipment

Group: Bulldozer: 180hp

Item: 34, John Deere, 850P, 850P

Description: Refer FSA Base Specifications PDF document.

Model Upgrade/Downgrade:

Zone	Rank	Vendor	Price	Build File	Options File
Western	Primary	Dobbs Equipment, LLC	$446,875.00	Build	Options
Northern	Primary	Dobbs Equipment, LLC	$446,875.00	Build	Options
Central	Primary	Dobbs Equipment, LLC	$437,215.00	Build	Options
Southern	Primary	Dobbs Equipment, LLC	$437,215.00	Build	Options

Bid Award

Contract: FSA26-EQU24.0, Equipment

Group: Bulldozer: 180hp

Item: 35, Liebherr, PR736, PR736

Description: Refer FSA Base Specifications PDF document.

Model Upgrade/Downgrade:

Zone	Rank	Vendor	Price	Build File	Options File
Western	Primary	GREAT SOUTHERN EQUIPMENT, LLC	$501,311.00	Build	Options
Northern	Primary	GREAT SOUTHERN EQUIPMENT, LLC	$501,311.00	Build	Options
Central	Primary	GREAT SOUTHERN EQUIPMENT, LLC	$501,311.00	Build	Options
Southern	Primary	GREAT SOUTHERN EQUIPMENT, LLC	$501,311.00	Build	Options

Bid Award

Contract: FSA26-EQU24.0, Equipment

Group: Bulldozer: 70hp

Item: 36, Case, 650M, 650M

Description: Refer FSA Base Specifications PDF document.

Model Upgrade/Downgrade:

Zone	Rank	Vendor	Price	Build File	Options File
Western	Primary	Innovative Equipment Services 2 LLC CASE Power & Equipment of Florida	$146,464.00	Build	Options
Northern	Primary	Innovative Equipment Services 2 LLC CASE Power & Equipment of Florida	$146,464.00	Build	Options
Central	Primary	Innovative Equipment Services 2 LLC CASE Power & Equipment of Florida	$146,464.00	Build	Options
Southern	Primary	Innovative Equipment Services 2 LLC CASE Power & Equipment of Florida	$146,464.00	Build	Options

Bid Award

Contract: FSA26-EQU24.0, Equipment

Group: Bulldozer: 70hp

Item: 37, Caterpillar, D1, D1

Description: Refer FSA Base Specifications PDF document.

Model Upgrade/Downgrade:

Zone	Rank	Vendor	Price	Build File	Options File
Western	Primary	Ring Power Corporation	$148,710.00	Build	Options
Northern	Primary	Ring Power Corporation	$148,710.00	Build	Options
Central	Primary	Ring Power Corporation	$148,710.00	Build	Options
Southern	Primary	Kelly Tractor Co	$140,300.00	Build	Options

Bid Award

Contract: FSA26-EQU24.0, Equipment

Group: Bulldozer: 70hp

Item: 38, John Deere, 450P, 450P

Description: Refer FSA Base Specifications PDF document.

Model Upgrade/Downgrade:

Zone	Rank	Vendor	Price	Build File	Options File
Western	Primary	Dobbs Equipment, LLC	$151,895.00	Build	Options
Northern	Primary	Dobbs Equipment, LLC	$151,895.00	Build	Options
Central	Primary	Dobbs Equipment, LLC	$148,475.00	Build	Options
Southern	Primary	Dobbs Equipment, LLC	$148,475.00	Build	Options

Bid Award

Contract: FSA26-EQU24.0, Equipment

Group: Bulldozer: 90hp

Item: 39, Case, 850M, 850M

Description: Refer FSA Base Specifications PDF document.

Model Upgrade/Downgrade:

Zone	Rank	Vendor	Price	Build File	Options File
Western	Primary	Innovative Equipment Services 2 LLC CASE Power & Equipment of Florida	$209,081.00	Build	Options
Northern	Primary	Innovative Equipment Services 2 LLC CASE Power & Equipment of Florida	$209,081.00	Build	Options
Central	Primary	Innovative Equipment Services 2 LLC CASE Power & Equipment of Florida	$209,081.00	Build	Options
Southern	Primary	Innovative Equipment Services 2 LLC CASE Power & Equipment of Florida	$209,081.00	Build	Options

Bid Award

Contract: FSA26-EQU24.0, Equipment

Group: Bulldozer: 90hp

Item: 40, Caterpillar, D2, D2

Description: Refer FSA Base Specifications PDF document.

Model Upgrade/Downgrade:

Zone	Rank	Vendor	Price	Build File	Options File
Western	Primary	Ring Power Corporation	$172,629.00	Build	Options
Northern	Primary	Ring Power Corporation	$172,629.00	Build	Options
Central	Primary	Ring Power Corporation	$172,629.00	Build	Options
Southern	Primary	Kelly Tractor Co	$164,465.00	Build	Options

Bid Award

Contract: FSA26-EQU24.0, Equipment

Group: Bulldozer: 90hp

Item: 41, DEVELON, DD100, DD100

Description: Refer FSA Base Specifications PDF document.

Model Upgrade/Downgrade:

Zone	Rank	Vendor	Price	Build File	Options File
Western	Primary	HD CONSTRUCTION EQUIPMENT DEVELON NORTH AMERICA LLC	$142,009.00	Build	Options
Northern	Primary	HD CONSTRUCTION EQUIPMENT DEVELON NORTH AMERICA LLC	$142,009.00	Build	Options
Central	Primary	HD CONSTRUCTION EQUIPMENT DEVELON NORTH AMERICA LLC	$142,009.00	Build	Options
Southern	Primary	HD CONSTRUCTION EQUIPMENT DEVELON NORTH AMERICA LLC	$142,009.00	Build	Options

Bid Award

Contract: FSA26-EQU24.0, Equipment

Group: Bulldozer: 90hp

Item: 42, John Deere, 550P, 550P

Description: Refer FSA Base Specifications PDF document.

Model Upgrade/Downgrade:

Zone	Rank	Vendor	Price	Build File	Options File
Western	Primary	Dobbs Equipment, LLC	$185,215.00	Build	Options
Northern	Primary	Dobbs Equipment, LLC	$185,215.00	Build	Options
Central	Primary	Dobbs Equipment, LLC	$180,375.00	Build	Options
Southern	Primary	Dobbs Equipment, LLC	$180,375.00	Build	Options

Bid Award

Contract: FSA26-EQU24.0, Equipment

Group: Bulldozer: 90hp

Item: 652, Hyundai, HD100LGP, HD100LGP

Description: Refer FSA Base Specifications PDF document.

Model Upgrade/Downgrade:

Zone	Rank	Vendor	Price	Build File	Options File
Western	Primary	National Equipment Dealers, LLC	$183,603.00	Build	Options
Northern	Primary	National Equipment Dealers, LLC	$183,603.00	Build	Options
Central	Primary	National Equipment Dealers, LLC	$183,603.00	Build	Options
Southern	Primary	National Equipment Dealers, LLC	$183,603.00	Build	Options

Bid Award

Contract: FSA26-EQU24.0, Equipment

Group: Chipper: Brush Chipper

Item: 43, Bandit, Intimidator, 15XP

Description: Refer FSA Base Specifications PDF document.

Model Upgrade/Downgrade:

Zone	Rank	Vendor	Price	Build File	Options File
Western					
Northern					
Central					
Southern	Primary	Alta Construction Equipment Florida, LLC	$80,000.00	Build	Options

Bid Award

Contract: FSA26-EQU24.0, Equipment

Group: Chipper: Brush Chipper

Item: 44, Vermeer, BC1500, BC1500

Description: Refer FSA Base Specifications PDF document.

Model Upgrade/Downgrade:

Zone	Rank	Vendor	Price	Build File	Options File
Western	Primary	Vermeer Southeast Sales	$95,584.00	Build	Options
Northern	Primary	Vermeer Southeast Sales	$95,584.00	Build	Options
Central	Primary	Vermeer Southeast Sales	$95,584.00	Build	Options
Southern	Primary	Vermeer Southeast Sales	$95,584.00	Build	Options

Bid Award

Contract: FSA26-EQU24.0, Equipment

Group: Compactor: 80,000 lbs. Landfill Compactor

Item: 46, Caterpillar, 826, 826

Description: Refer FSA Base Specifications PDF document.

Model Upgrade/Downgrade:

Zone	Rank	Vendor	Price	Build File	Options File
Western	Primary	Ring Power Corporation	$1,049,058.00	Build	Options
Northern	Primary	Ring Power Corporation	$1,049,058.00	Build	Options
Central	Primary	Ring Power Corporation	$1,049,058.00	Build	Options
Southern	Primary	Kelly Tractor Co	$1,016,140.00	Build	Options

Bid Award

Contract: FSA26-EQU24.0, Equipment

Group: Compactor: 80,000 lbs. Landfill Compactor

Item: 47, Tana, H380, H380

Description: Refer FSA Base Specifications PDF document.

Model Upgrade/Downgrade:

Zone	Rank	Vendor	Price	Build File	Options File
Western	Primary	Humdinger Equipment, Ltd.	$1,096,940.00	Build	Options
Northern	Primary	Humdinger Equipment, Ltd.	$1,096,940.00	Build	Options
Central	Primary	Humdinger Equipment, Ltd.	$1,096,940.00	Build	Options
Southern	Primary	Humdinger Equipment, Ltd.	$1,096,940.00	Build	Options

Bid Award

Contract: FSA26-EQU24.0, Equipment

Group: Compactor: 80,000 lbs. Landfill Compactor

Item: 48, Volvo, LC450, LC450

Description: Refer FSA Base Specifications PDF document.

Model Upgrade/Downgrade:

Zone	Rank	Vendor	Price	Build File	Options File
Western	Primary	Cowin Equipment Company	$1,013,374.00	Build	Options
Northern	Primary	Alta Construction Equipment Florida, LLC	$1,015,000.00	Build	Options
Central	Primary	Alta Construction Equipment Florida, LLC	$1,015,000.00	Build	Options
Southern	Primary	Alta Construction Equipment Florida, LLC	$1,015,000.00	Build	Options

Bid Award

Contract: FSA26-EQU24.0, Equipment

Group: Compressor: Air Compressor - Trailer Mounted

Item: 49, Atlas Copco, XAS 188 T4F, XAS 188 T4F

Description: Refer FSA Base Specifications PDF document.

Model Upgrade/Downgrade:

Zone	Rank	Vendor	Price	Build File	Options File
Western	Primary	Ring Power Corporation	$33,649.00	Build	Options
Northern	Primary	Ring Power Corporation	$33,649.00	Build	Options
Central	Primary	Ring Power Corporation	$33,649.00	Build	Options
Southern	Primary Alternate	Ring Power Corporation Kelly Tractor Co	$33,649.00 $34,075.00	Build Build	Options Options

Bid Award

Contract: FSA26-EQU24.0, Equipment

Group: Compressor: Air Compressor - Trailer Mounted

Item: 50, Bobcat, PA185VWDO-T4F, PA185VWDO-T4F

Description: Refer FSA Base Specifications PDF document.

Model Upgrade/Downgrade:

Zone	Rank	Vendor	Price	Build File	Options File
Western	Primary	Doosan Bobcat North America, Inc.	$26,982.00	Build	Options
Northern	Primary	Doosan Bobcat North America, Inc.	$26,982.00	Build	Options
Central	Primary	Doosan Bobcat North America, Inc.	$26,982.00	Build	Options
Southern	Primary	Doosan Bobcat North America, Inc.	$26,982.00	Build	Options

Bid Award

Contract: FSA26-EQU24.0, Equipment

Group: Compressor: Air Compressor - Trailer Mounted

Item: 53, Sullair, 185 T4F, 185 T4F

Description: Refer FSA Base Specifications PDF document.

Model Upgrade/Downgrade:

Zone	Rank	Vendor	Price	Build File	Options File
Western	Primary	Ring Power Corporation	$34,463.00	Build	Options
Northern	Primary	Ring Power Corporation	$34,463.00	Build	Options
Central	Primary	Ring Power Corporation	$34,463.00	Build	Options
Southern	Primary Alternate	Ring Power Corporation Kelly Tractor Co	$34,463.00 $35,600.00	Build Build	Options Options

Bid Award

Contract: FSA26-EQU24.0, Equipment

Group: Compressor: Air Compressor - Trailer Mounted

Item: 54, Sullivan Palatek, D185P, D185P

Description: Refer FSA Base Specifications PDF document.

Model Upgrade/Downgrade:

Zone	Rank	Vendor	Price	Build File	Options File
Western					
Northern					
Central	Primary	Kelly Tractor Co	$30,625.00	Build	Options
Southern	Primary	Kelly Tractor Co	$30,625.00	Build	Options

Bid Award

Contract: FSA26-EQU24.0, Equipment

Group: Dump Truck: Articulating Off Road Dump Truck - 50,000 lbs. Payload

Item: 55, Bell, B25E, B25E

Description: Refer FSA Base Specifications PDF document.

Model Upgrade/Downgrade:

Zone	Rank	Vendor	Price	Build File	Options File
Western	Primary	National Equipment Dealers, LLC	$500,526.00	Build	Options
Northern	Primary	National Equipment Dealers, LLC	$500,526.00	Build	Options
Central	Primary	National Equipment Dealers, LLC	$500,526.00	Build	Options
Southern	Primary	National Equipment Dealers, LLC	$500,526.00	Build	Options

Bid Award

Contract: FSA26-EQU24.0, Equipment

Group: Dump Truck: Articulating Off Road Dump Truck - 50,000 lbs. Payload

Item: 56, Caterpillar, 725, 725

Description: Refer FSA Base Specifications PDF document.

Model Upgrade/Downgrade:

Zone	Rank	Vendor	Price	Build File	Options File
Western	Primary	Ring Power Corporation	$522,716.00	Build	Options
Northern	Primary	Ring Power Corporation	$522,716.00	Build	Options
Central	Primary	Ring Power Corporation	$522,716.00	Build	Options
Southern	Primary	Kelly Tractor Co	$500,360.00	Build	Options

Bid Award

Contract: FSA26-EQU24.0, Equipment

Group: Dump Truck: Articulating Off Road Dump Truck - 50,000 lbs. Payload

Item: 57, DEVELON, DA30-5, DA30-5

Description: Refer FSA Base Specifications PDF document.

Model Upgrade/Downgrade:

Zone	Rank	Vendor	Price	Build File	Options File
Western	Primary	HD CONSTRUCTION EQUIPMENT DEVELON NORTH AMERICA LLC	$416,004.00	Build	Options
Northern	Primary	HD CONSTRUCTION EQUIPMENT DEVELON NORTH AMERICA LLC	$416,004.00	Build	Options
Central	Primary	HD CONSTRUCTION EQUIPMENT DEVELON NORTH AMERICA LLC	$416,004.00	Build	Options
Southern	Primary	HD CONSTRUCTION EQUIPMENT DEVELON NORTH AMERICA LLC	$416,004.00	Build	Options

Bid Award

Contract: FSA26-EQU24.0, Equipment

Group: Dump Truck: Articulating Off Road Dump Truck - 50,000 lbs. Payload

Item: 58, John Deere, 260P, 260P

Description: Refer FSA Base Specifications PDF document.

Model Upgrade/Downgrade:

Zone	Rank	Vendor	Price	Build File	Options File
Western	Primary	Dobbs Equipment, LLC	$492,175.00	Build	Options
Northern	Primary	Dobbs Equipment, LLC	$492,175.00	Build	Options
Central	Primary	Dobbs Equipment, LLC	$481,285.00	Build	Options
Southern	Primary	Dobbs Equipment, LLC	$481,285.00	Build	Options

Bid Award

Contract: FSA26-EQU24.0, Equipment

Group: Dump Truck: Articulating Off Road Dump Truck - 50,000 lbs. Payload

Item: 59, Liebherr, TA230, TA230

Description: Refer FSA Base Specifications PDF document.

Model Upgrade/Downgrade:

Zone	Rank	Vendor	Price	Build File	Options File
Western	Primary	GREAT SOUTHERN EQUIPMENT, LLC	$534,046.00	Build	Options
Northern	Primary	GREAT SOUTHERN EQUIPMENT, LLC	$534,046.00	Build	Options
Central	Primary	GREAT SOUTHERN EQUIPMENT, LLC	$534,046.00	Build	Options
Southern	Primary	GREAT SOUTHERN EQUIPMENT, LLC	$534,046.00	Build	Options

Bid Award

Contract: FSA26-EQU24.0, Equipment

Group: Dump Truck: Articulating Off Road Dump Truck - 50,000 lbs. Payload

Item: 61, Volvo, A25, A25

Description: Refer FSA Base Specifications PDF document.

Model Upgrade/Downgrade:

Zone	Rank	Vendor	Price	Build File	Options File
Western	Primary	Cowin Equipment Company	$462,079.00	Build	Options
Northern	Primary	Alta Construction Equipment Florida, LLC	$462,000.00	Build	Options
Central	Primary	Alta Construction Equipment Florida, LLC	$462,000.00	Build	Options
Southern	Primary	Alta Construction Equipment Florida, LLC	$462,000.00	Build	Options

Bid Award

Contract: FSA26-EQU24.0, Equipment

Group: Dump Truck: Articulating Off Road Dump Truck - 50,000 lbs. Payload

Item: 653, Hyundai, HA30, HA30

Description: Refer FSA Base Specifications PDF document.

Model Upgrade/Downgrade:

Zone	Rank	Vendor	Price	Build File	Options File
Western	Primary	National Equipment Dealers, LLC	$502,363.00	Build	Options
Northern	Primary	National Equipment Dealers, LLC	$502,363.00	Build	Options
Central	Primary	National Equipment Dealers, LLC	$502,363.00	Build	Options
Southern	Primary	National Equipment Dealers, LLC	$502,363.00	Build	Options

Bid Award

Contract: FSA26-EQU24.0, Equipment

Group: Excavator: All Terrain Walking Excavator

Item: 62, Euromach, R1055, R1055

Description: Refer FSA Base Specifications PDF document.

Model Upgrade/Downgrade:

Zone	Rank	Vendor	Price	Build File	Options File
Western	Primary	KJF Equipment Services LLC	$520,000.00	Build	Options
Northern	Primary	KJF Equipment Services LLC	$520,000.00	Build	Options
Central	Primary	KJF Equipment Services LLC	$520,000.00	Build	Options
Southern	Primary	KJF Equipment Services LLC	$520,000.00	Build	Options

Bid Award

Contract: FSA26-EQU24.0, Equipment

Group: Excavator: All Terrain Walking Excavator

Item: 63, Kaiser, S8, S8

Description: Refer FSA Base Specifications PDF document.

Model Upgrade/Downgrade:

Zone	Rank	Vendor	Price	Build File	Options File
Western	Primary	GREAT SOUTHERN EQUIPMENT, LLC	$587,000.00	Build	Options
Northern	Primary	GREAT SOUTHERN EQUIPMENT, LLC	$587,000.00	Build	Options
Central	Primary	GREAT SOUTHERN EQUIPMENT, LLC	$587,000.00	Build	Options
Southern	Primary	GREAT SOUTHERN EQUIPMENT, LLC	$587,000.00	Build	Options

Bid Award

Contract: FSA26-EQU24.0, Equipment

Group: Excavator: All Terrain Walking Excavator

Item: 64, Menzi Muck, M425X, M425X

Description: Refer FSA Base Specifications PDF document.

Model Upgrade/Downgrade:

Zone	Rank	Vendor	Price	Build File	Options File
Western	Primary	Menzi Muck USA, Inc.	$540,000.00	Build	Options
Northern	Primary	Menzi Muck USA, Inc.	$540,000.00	Build	Options
Central	Primary	Menzi Muck USA, Inc.	$540,000.00	Build	Options
Southern	Primary	Menzi Muck USA, Inc.	$540,000.00	Build	Options

Bid Award

Contract: FSA26-EQU24.0, Equipment

Group: Excavator: Hydraulic Excavator - 15,590 lbs. Operating Weight

Item: 65, Bobcat, E88, E88

Description: Refer FSA Base Specifications PDF document.

Model Upgrade/Downgrade:

Zone	Rank	Vendor	Price	Build File	Options File
Western	Primary	Doosan Bobcat North America, Inc.	$106,727.00	Build	Options
Northern	Primary	Doosan Bobcat North America, Inc.	$106,727.00	Build	Options
Central	Primary	Doosan Bobcat North America, Inc.	$106,727.00	Build	Options
Southern	Primary	Doosan Bobcat North America, Inc.	$106,727.00	Build	Options

Bid Award

Contract: FSA26-EQU24.0, Equipment

Group: Excavator: Hydraulic Excavator - 15,590 lbs. Operating Weight

Item: 66, Case, CX80C, CX80C

Description: Refer FSA Base Specifications PDF document.

Model Upgrade/Downgrade:

Zone	Rank	Vendor	Price	Build File	Options File
Western	Primary	Innovative Equipment Services 2 LLC CASE Power & Equipment of Florida	$119,732.00	Build	Options
Northern	Primary	Innovative Equipment Services 2 LLC CASE Power & Equipment of Florida	$119,732.00	Build	Options
Central	Primary	Innovative Equipment Services 2 LLC CASE Power & Equipment of Florida	$119,732.00	Build	Options
Southern	Primary	Innovative Equipment Services 2 LLC CASE Power & Equipment of Florida	$119,732.00	Build	Options

Bid Award

Contract: FSA26-EQU24.0, Equipment

Group: Excavator: Hydraulic Excavator - 15,590 lbs. Operating Weight

Item: 67, Caterpillar, 308, 308

Description: Refer FSA Base Specifications PDF document.

Model Upgrade/Downgrade:

Zone	Rank	Vendor	Price	Build File	Options File
Western	Primary	Ring Power Corporation	$144,108.00	Build	Options
Northern	Primary	Ring Power Corporation	$144,108.00	Build	Options
Central	Primary	Ring Power Corporation	$144,108.00	Build	Options
Southern	Primary	Kelly Tractor Co	$129,665.00	Build	Options

Bid Award

Contract: FSA26-EQU24.0, Equipment

Group: Excavator: Hydraulic Excavator - 15,590 lbs. Operating Weight

Item: 68, DEVELON, DX89R-7, DX89R-7

Description: Refer FSA Base Specifications PDF document.

Model Upgrade/Downgrade:

Zone	Rank	Vendor	Price	Build File	Options File
Western	Primary	HD CONSTRUCTION EQUIPMENT DEVELON NORTH AMERICA LLC	$96,927.00	Build	Options
Northern	Primary	HD CONSTRUCTION EQUIPMENT DEVELON NORTH AMERICA LLC	$96,927.00	Build	Options
Central	Primary	HD CONSTRUCTION EQUIPMENT DEVELON NORTH AMERICA LLC	$96,927.00	Build	Options
Southern	Primary	HD CONSTRUCTION EQUIPMENT DEVELON NORTH AMERICA LLC	$96,927.00	Build	Options

Bid Award

Contract: FSA26-EQU24.0, Equipment

Group: Excavator: Hydraulic Excavator - 15,590 lbs. Operating Weight

Item: 69, Hitachi, ZX75US, ZX75US

Description: Refer FSA Base Specifications PDF document.

Model Upgrade/Downgrade:

Zone	Rank	Vendor	Price	Build File	Options File
Western	Primary	GREAT SOUTHERN EQUIPMENT, LLC	$110,552.00	Build	Options
Northern	Primary	GREAT SOUTHERN EQUIPMENT, LLC	$110,552.00	Build	Options
Central	Primary	GREAT SOUTHERN EQUIPMENT, LLC	$110,552.00	Build	Options
Southern	Primary	GREAT SOUTHERN EQUIPMENT, LLC	$110,552.00	Build	Options

Bid Award

Contract: FSA26-EQU24.0, Equipment

Group: Excavator: Hydraulic Excavator - 15,590 lbs. Operating Weight

Item: 70, Hyundai, HX90A, HX90A

Description: Refer FSA Base Specifications PDF document.

Model Upgrade/Downgrade:

Zone	Rank	Vendor	Price	Build File	Options File
Western	Primary	National Equipment Dealers, LLC	$124,375.00	Build	Options
Northern	Primary	National Equipment Dealers, LLC	$124,375.00	Build	Options
Central	Primary	National Equipment Dealers, LLC	$124,375.00	Build	Options
Southern	Primary	National Equipment Dealers, LLC	$124,375.00	Build	Options

Bid Award

Contract: FSA26-EQU24.0, Equipment

Group: Excavator: Hydraulic Excavator - 15,590 lbs. Operating Weight

Item: 71, John Deere, 75P, 75P

Description: Refer FSA Base Specifications PDF document.

Model Upgrade/Downgrade:

Zone	Rank	Vendor	Price	Build File	Options File
Western	Primary	Dobbs Equipment, LLC	$122,400.00	Build	Options
Northern	Primary	Dobbs Equipment, LLC	$122,400.00	Build	Options
Central	Primary	Dobbs Equipment, LLC	$119,850.00	Build	Options
Southern	Primary	Dobbs Equipment, LLC	$119,850.00	Build	Options

Bid Award

Contract: FSA26-EQU24.0, Equipment

Group: Excavator: Hydraulic Excavator - 15,590 lbs. Operating Weight

Item: 72, Kubota, KX080-5R3, KX080-5R3

Description: Refer FSA Base Specifications PDF document.

Model Upgrade/Downgrade:

Zone	Rank	Vendor	Price	Build File	Options File
Western	Primary	Creel Tractor Company	$101,450.00	Build	Options
Northern	Primary Alternate	Creel Tractor Company Florida Coast Equipment, Inc.	$101,050.00 $102,700.00	Build Build	Options Options
Central	Primary Alternate	Creel Tractor Company Florida Coast Equipment, Inc.	$100,950.00 $102,700.00	Build Build	Options Options
Southern	Primary Alternate	Creel Tractor Company Florida Coast Equipment, Inc.	$100,650.00 $102,700.00	Build Build	Options Options

Bid Award

Contract: FSA26-EQU24.0, Equipment

Group: Excavator: Hydraulic Excavator - 15,590 lbs. Operating Weight

Item: 73, Link-Belt, 75X3, 75X3

Description: Refer FSA Base Specifications PDF document.

Model Upgrade/Downgrade:

Zone	Rank	Vendor	Price	Build File	Options File
Western	Primary	GREAT SOUTHERN EQUIPMENT, LLC	$96,645.00	Build	Options
Northern	Primary	GREAT SOUTHERN EQUIPMENT, LLC	$96,645.00	Build	Options
Central	Primary	GREAT SOUTHERN EQUIPMENT, LLC	$96,645.00	Build	Options
Southern	Primary	GREAT SOUTHERN EQUIPMENT, LLC	$96,645.00	Build	Options

Bid Award

Contract: FSA26-EQU24.0, Equipment

Group: Excavator: Hydraulic Excavator - 15,590 lbs. Operating Weight

Item: 75, New Holland, Midi Excavator, E70D

Description: Refer FSA Base Specifications PDF document.

Model Upgrade/Downgrade:

Zone	Rank	Vendor	Price	Build File	Options File
Western	Primary	Love Power Equipment, Inc	$113,340.00	Build	Options
Northern	Primary	Love Power Equipment, Inc	$110,340.00	Build	Options
Central	Primary	Love Power Equipment, Inc	$110,340.00	Build	Options
Southern	Primary	Love Power Equipment, Inc	$113,340.00	Build	Options

Bid Award

Contract: FSA26-EQU24.0, Equipment

Group: Excavator: Hydraulic Excavator - 15,590 lbs. Operating Weight

Item: 77, Takeuchi, TB290, TB290

Description: Refer FSA Base Specifications PDF document.

Model Upgrade/Downgrade:

Zone	Rank	Vendor	Price	Build File	Options File
Western	Primary	Cowin Equipment Company	$113,546.00	Build	Options
Northern	Primary	Alta Construction Equipment Florida, LLC	$113,000.00	Build	Options
Central	Primary	Alta Construction Equipment Florida, LLC	$113,000.00	Build	Options
Southern	Primary	Alta Construction Equipment Florida, LLC	$113,000.00	Build	Options

Bid Award

Contract: FSA26-EQU24.0, Equipment

Group: Excavator: Hydraulic Excavator - 15,590 lbs. Operating Weight

Item: 78, Volvo, ECR90, ECR90

Description: Refer FSA Base Specifications PDF document.

Model Upgrade/Downgrade:

Zone	Rank	Vendor	Price	Build File	Options File
Western	Primary	Cowin Equipment Company	$129,493.00	Build	Options
Northern	Primary	Alta Construction Equipment Florida, LLC	$130,000.00	Build	Options
Central	Primary	Alta Construction Equipment Florida, LLC	$130,000.00	Build	Options
Southern	Primary	Alta Construction Equipment Florida, LLC	$130,000.00	Build	Options

Bid Award

Contract: FSA26-EQU24.0, Equipment

Group: Excavator: Hydraulic Excavator - 15,590 lbs. Operating Weight

Item: 79, Yanmar, Vi080-7, Vi080-7

Description: Refer FSA Base Specifications PDF document.

Model Upgrade/Downgrade:

Zone	Rank	Vendor	Price	Build File	Options File
Western	Primary	National Equipment Dealers, LLC	$140,000.00	Build	Options
Northern	Primary	National Equipment Dealers, LLC	$140,000.00	Build	Options
Central	Primary	National Equipment Dealers, LLC	$140,000.00	Build	Options
Southern	Primary	National Equipment Dealers, LLC	$140,000.00	Build	Options

Bid Award

Contract: FSA26-EQU24.0, Equipment

Group: Excavator: Hydraulic Excavator - 38,000 lbs. Operating Weight

Item: 80, Bobcat, E165, E165

Description: Refer FSA Base Specifications PDF document.

Model Upgrade/Downgrade:

Zone	Rank	Vendor	Price	Build File	Options File
Western	Primary	Doosan Bobcat North America, Inc.	$148,165.00	Build	Options
Northern	Primary	Doosan Bobcat North America, Inc.	$148,165.00	Build	Options
Central	Primary	Doosan Bobcat North America, Inc.	$148,165.00	Build	Options
Southern	Primary	Doosan Bobcat North America, Inc.	$148,165.00	Build	Options

Bid Award

Contract: FSA26-EQU24.0, Equipment

Group: Excavator: Hydraulic Excavator - 38,000 lbs. Operating Weight

Item: 81, Case, CX170E, CX170E

Description: Refer FSA Base Specifications PDF document.

Model Upgrade/Downgrade:

Zone	Rank	Vendor	Price	Build File	Options File
Western	Primary	Innovative Equipment Services 2 LLC CASE Power & Equipment of Florida	$239,397.00	Build	Options
Northern	Primary	Innovative Equipment Services 2 LLC CASE Power & Equipment of Florida	$239,397.00	Build	Options
Central	Primary	Innovative Equipment Services 2 LLC CASE Power & Equipment of Florida	$239,397.00	Build	Options
Southern	Primary	Innovative Equipment Services 2 LLC CASE Power & Equipment of Florida	$239,397.00	Build	Options

Bid Award

Contract: FSA26-EQU24.0, Equipment

Group: Excavator: Hydraulic Excavator - 38,000 lbs. Operating Weight

Item: 82, Caterpillar, 317 GC, 317 GC

Description: Refer FSA Base Specifications PDF document.

Model Upgrade/Downgrade:

Zone	Rank	Vendor	Price	Build File	Options File
Western	Primary	Ring Power Corporation	$225,372.00	Build	Options
Northern	Primary	Ring Power Corporation	$225,372.00	Build	Options
Central	Primary	Ring Power Corporation	$225,372.00	Build	Options
Southern	Primary	Kelly Tractor Co	$203,330.00	Build	Options

Bid Award

Contract: FSA26-EQU24.0, Equipment

Group: Excavator: Hydraulic Excavator - 38,000 lbs. Operating Weight

Item: 83, DEVELON, DX170LC-7, DX170LC-7

Description: Refer FSA Base Specifications PDF document.

Model Upgrade/Downgrade:

Zone	Rank	Vendor	Price	Build File	Options File
Western	Primary	HD CONSTRUCTION EQUIPMENT DEVELON NORTH AMERICA LLC	$148,228.00	Build	Options
Northern	Primary	HD CONSTRUCTION EQUIPMENT DEVELON NORTH AMERICA LLC	$148,228.00	Build	Options
Central	Primary	HD CONSTRUCTION EQUIPMENT DEVELON NORTH AMERICA LLC	$148,228.00	Build	Options
Southern	Primary	HD CONSTRUCTION EQUIPMENT DEVELON NORTH AMERICA LLC	$148,228.00	Build	Options

Bid Award

Contract: FSA26-EQU24.0, Equipment

Group: Excavator: Hydraulic Excavator - 38,000 lbs. Operating Weight

Item: 84, Hitachi, ZX160LC, ZX160LC

Description: Refer FSA Base Specifications PDF document.

Model Upgrade/Downgrade:

Zone	Rank	Vendor	Price	Build File	Options File
Western	Primary	GREAT SOUTHERN EQUIPMENT, LLC	$197,757.00	Build	Options
Northern	Primary	GREAT SOUTHERN EQUIPMENT, LLC	$197,757.00	Build	Options
Central	Primary	GREAT SOUTHERN EQUIPMENT, LLC	$197,757.00	Build	Options
Southern	Primary	GREAT SOUTHERN EQUIPMENT, LLC	$197,757.00	Build	Options

Bid Award

Contract: FSA26-EQU24.0, Equipment

Group: Excavator: Hydraulic Excavator - 38,000 lbs. Operating Weight

Item: 85, Hyundai, HX160AL, HX160AL

Description: Refer FSA Base Specifications PDF document.

Model Upgrade/Downgrade:

Zone	Rank	Vendor	Price	Build File	Options File
Western	Primary	National Equipment Dealers, LLC	$195,185.00	Build	Options
Northern	Primary	National Equipment Dealers, LLC	$195,185.00	Build	Options
Central	Primary	National Equipment Dealers, LLC	$195,185.00	Build	Options
Southern	Primary	National Equipment Dealers, LLC	$195,185.00	Build	Options

Bid Award

Contract: FSA26-EQU24.0, Equipment

Group: Excavator: Hydraulic Excavator - 38,000 lbs. Operating Weight

Item: 86, John Deere, 160P, 160P

Description: Refer FSA Base Specifications PDF document.

Model Upgrade/Downgrade:

Zone	Rank	Vendor	Price	Build File	Options File
Western	Primary	Dobbs Equipment, LLC	$217,645.00	Build	Options
Northern	Primary	Dobbs Equipment, LLC	$217,645.00	Build	Options
Central	Primary	Dobbs Equipment, LLC	$212,925.00	Build	Options
Southern	Primary	Dobbs Equipment, LLC	$212,925.00	Build	Options

Bid Award

Contract: FSA26-EQU24.0, Equipment

Group: Excavator: Hydraulic Excavator - 38,000 lbs. Operating Weight

Item: 88, Link-Belt, 170X4, 170X4

Description: Refer FSA Base Specifications PDF document.

Model Upgrade/Downgrade:

Zone	Rank	Vendor	Price	Build File	Options File
Western	Primary	GREAT SOUTHERN EQUIPMENT, LLC	$185,663.00	Build	Options
Northern	Primary	GREAT SOUTHERN EQUIPMENT, LLC	$185,663.00	Build	Options
Central	Primary	GREAT SOUTHERN EQUIPMENT, LLC	$185,663.00	Build	Options
Southern	Primary	GREAT SOUTHERN EQUIPMENT, LLC	$185,663.00	Build	Options

Bid Award

Contract: FSA26-EQU24.0, Equipment

Group: Excavator: Hydraulic Excavator - 38,000 lbs. Operating Weight

Item: 90, Volvo, EC160, EC160

Description: Refer FSA Base Specifications PDF document.

Model Upgrade/Downgrade:

Zone	Rank	Vendor	Price	Build File	Options File
Western	Primary	Cowin Equipment Company	$186,390.00	Build	Options
Northern	Primary	Alta Construction Equipment Florida, LLC	$187,000.00	Build	Options
Central	Primary	Alta Construction Equipment Florida, LLC	$187,000.00	Build	Options
Southern	Primary	Alta Construction Equipment Florida, LLC	$187,000.00	Build	Options

Bid Award

Contract: FSA26-EQU24.0, Equipment

Group: Excavator: Hydraulic Excavator - 76,550 lbs. Operating Weight

Item: 91, Case, CX350D, CX350D

Description: Refer FSA Base Specifications PDF document.

Model Upgrade/Downgrade:

Zone	Rank	Vendor	Price	Build File	Options File
Western	Primary	Innovative Equipment Services 2 LLC CASE Power & Equipment of Florida	$456,142.00	Build	Options
Northern	Primary	Innovative Equipment Services 2 LLC CASE Power & Equipment of Florida	$456,142.00	Build	Options
Central	Primary	Innovative Equipment Services 2 LLC CASE Power & Equipment of Florida	$456,142.00	Build	Options
Southern	Primary	Innovative Equipment Services 2 LLC CASE Power & Equipment of Florida	$456,142.00	Build	Options

Bid Award

Contract: FSA26-EQU24.0, Equipment

Group: Excavator: Hydraulic Excavator - 76,550 lbs. Operating Weight

Item: 92, Caterpillar, 336, 336

Description: Refer FSA Base Specifications PDF document.

Model Upgrade/Downgrade:

Zone	Rank	Vendor	Price	Build File	Options File
Western	Primary	Ring Power Corporation	$402,076.00	Build	Options
Northern	Primary	Ring Power Corporation	$402,076.00	Build	Options
Central	Primary	Ring Power Corporation	$402,076.00	Build	Options
Southern	Primary	Kelly Tractor Co	$378,695.00	Build	Options

Bid Award

Contract: FSA26-EQU24.0, Equipment

Group: Excavator: Hydraulic Excavator - 76,550 lbs. Operating Weight

Item: 93, DEVELON, DX350LC-7, DX350LC-7

Description: Refer FSA Base Specifications PDF document.

Model Upgrade/Downgrade:

Zone	Rank	Vendor	Price	Build File	Options File
Western	Primary	HD CONSTRUCTION EQUIPMENT DEVELON NORTH AMERICA LLC	$306,733.00	Build	Options
Northern	Primary	HD CONSTRUCTION EQUIPMENT DEVELON NORTH AMERICA LLC	$306,733.00	Build	Options
Central	Primary	HD CONSTRUCTION EQUIPMENT DEVELON NORTH AMERICA LLC	$306,733.00	Build	Options
Southern	Primary	HD CONSTRUCTION EQUIPMENT DEVELON NORTH AMERICA LLC	$306,733.00	Build	Options

Bid Award

Contract: FSA26-EQU24.0, Equipment

Group: Excavator: Hydraulic Excavator - 76,550 lbs. Operating Weight

Item: 94, Hitachi, ZX350, ZX350

Description: Refer FSA Base Specifications PDF document.

Model Upgrade/Downgrade:

Zone	Rank	Vendor	Price	Build File	Options File
Western	Primary	GREAT SOUTHERN EQUIPMENT, LLC	$311,566.00	Build	Options
Northern	Primary	GREAT SOUTHERN EQUIPMENT, LLC	$311,566.00	Build	Options
Central	Primary	GREAT SOUTHERN EQUIPMENT, LLC	$311,566.00	Build	Options
Southern	Primary	GREAT SOUTHERN EQUIPMENT, LLC	$311,566.00	Build	Options

Bid Award

Contract: FSA26-EQU24.0, Equipment

Group: Excavator: Hydraulic Excavator - 76,550 lbs. Operating Weight

Item: 96, Hyundai, HX350AL, HX350AL

Description: Refer FSA Base Specifications PDF document.

Model Upgrade/Downgrade:

Zone	Rank	Vendor	Price	Build File	Options File
Western	Primary	National Equipment Dealers, LLC	$339,304.00	Build	Options
Northern	Primary	National Equipment Dealers, LLC	$339,304.00	Build	Options
Central	Primary	National Equipment Dealers, LLC	$339,304.00	Build	Options
Southern	Primary	National Equipment Dealers, LLC	$339,304.00	Build	Options

Bid Award

Contract: FSA26-EQU24.0, Equipment

Group: Excavator: Hydraulic Excavator - 76,550 lbs. Operating Weight

Item: 97, John Deere, 350P, 350P

Description: Refer FSA Base Specifications PDF document.

Model Upgrade/Downgrade:

Zone	Rank	Vendor	Price	Build File	Options File
Western	Primary	Dobbs Equipment, LLC	$378,425.00	Build	Options
Northern	Primary	Dobbs Equipment, LLC	$378,425.00	Build	Options
Central	Primary	Dobbs Equipment, LLC	$370,185.00	Build	Options
Southern	Primary	Dobbs Equipment, LLC	$370,185.00	Build	Options

Bid Award

Contract: FSA26-EQU24.0, Equipment

Group: Excavator: Hydraulic Excavator - 76,550 lbs. Operating Weight

Item: 99, Link-Belt, 370X4, 370X4

Description: Refer FSA Base Specifications PDF document.

Model Upgrade/Downgrade:

Zone	Rank	Vendor	Price	Build File	Options File
Western	Primary	GREAT SOUTHERN EQUIPMENT, LLC	$312,503.00	Build	Options
Northern	Primary	GREAT SOUTHERN EQUIPMENT, LLC	$312,503.00	Build	Options
Central	Primary	GREAT SOUTHERN EQUIPMENT, LLC	$312,503.00	Build	Options
Southern	Primary	GREAT SOUTHERN EQUIPMENT, LLC	$312,503.00	Build	Options

Bid Award

Contract: FSA26-EQU24.0, Equipment

Group: Excavator: Hydraulic Excavator - 76,550 lbs. Operating Weight

Item: 101, Volvo, EC370, EC370

Description: Refer FSA Base Specifications PDF document.

Model Upgrade/Downgrade:

Zone	Rank	Vendor	Price	Build File	Options File
Western	Primary	Cowin Equipment Company	$349,862.00	Build	Options
Northern	Primary	Alta Construction Equipment Florida, LLC	$350,000.00	Build	Options
Central	Primary	Alta Construction Equipment Florida, LLC	$350,000.00	Build	Options
Southern	Primary	Alta Construction Equipment Florida, LLC	$350,000.00	Build	Options

Bid Award

Contract: FSA26-EQU24.0, Equipment

Group: Excavator: Mini Hydraulic Excavator - 7,105 lbs. Operating Weight

Item: 102, Bobcat, E32, E32

Description: Refer FSA Base Specifications PDF document.

Model Upgrade/Downgrade:

Zone	Rank	Vendor	Price	Build File	Options File
Western	Primary	Doosan Bobcat North America, Inc.	$45,615.00	Build	Options
Northern	Primary	Doosan Bobcat North America, Inc.	$45,615.00	Build	Options
Central	Primary	Doosan Bobcat North America, Inc.	$45,615.00	Build	Options
Southern	Primary	Doosan Bobcat North America, Inc.	$45,615.00	Build	Options

Bid Award

Contract: FSA26-EQU24.0, Equipment

Group: Excavator: Mini Hydraulic Excavator - 7,105 lbs. Operating Weight

Item: 103, Case, CX37C, CX37C

Description: Refer FSA Base Specifications PDF document.

Model Upgrade/Downgrade:

Zone	Rank	Vendor	Price	Build File	Options File
Western	Primary	Innovative Equipment Services 2 LLC CASE Power & Equipment of Florida	$52,212.00	Build	Options
Northern	Primary	Innovative Equipment Services 2 LLC CASE Power & Equipment of Florida	$52,212.00	Build	Options
Central	Primary	Innovative Equipment Services 2 LLC CASE Power & Equipment of Florida	$52,212.00	Build	Options
Southern	Primary	Innovative Equipment Services 2 LLC CASE Power & Equipment of Florida	$52,212.00	Build	Options

Bid Award

Contract: FSA26-EQU24.0, Equipment

Group: Excavator: Mini Hydraulic Excavator - 7,105 lbs. Operating Weight

Item: 104, Caterpillar, 303, 303

Description: Refer FSA Base Specifications PDF document.

Model Upgrade/Downgrade:

Zone	Rank	Vendor	Price	Build File	Options File
Western	Primary	Ring Power Corporation	$52,794.00	Build	Options
Northern	Primary	Ring Power Corporation	$52,794.00	Build	Options
Central	Primary	Ring Power Corporation	$52,794.00	Build	Options
Southern	Primary	Kelly Tractor Co	$50,930.00	Build	Options

Bid Award

Contract: FSA26-EQU24.0, Equipment

Group: Excavator: Mini Hydraulic Excavator - 7,105 lbs. Operating Weight

Item: 105, DEVELON, DX35Z-7, DX35Z-7

Description: Refer FSA Base Specifications PDF document.

Model Upgrade/Downgrade:

Zone	Rank	Vendor	Price	Build File	Options File
Western	Primary	HD CONSTRUCTION EQUIPMENT DEVELON NORTH AMERICA LLC	$43,843.00	Build	Options
Northern	Primary	HD CONSTRUCTION EQUIPMENT DEVELON NORTH AMERICA LLC	$43,843.00	Build	Options
Central	Primary	HD CONSTRUCTION EQUIPMENT DEVELON NORTH AMERICA LLC	$43,843.00	Build	Options
Southern	Primary	HD CONSTRUCTION EQUIPMENT DEVELON NORTH AMERICA LLC	$43,843.00	Build	Options

Bid Award

Contract: FSA26-EQU24.0, Equipment

Group: Excavator: Mini Hydraulic Excavator - 7,105 lbs. Operating Weight

Item: 106, Hitachi, ZX35-U, ZX35-U

Description: Refer FSA Base Specifications PDF document.

Model Upgrade/Downgrade:

Zone	Rank	Vendor	Price	Build File	Options File
Western	Primary	GREAT SOUTHERN EQUIPMENT, LLC	$55,595.00	Build	Options
Northern	Primary	GREAT SOUTHERN EQUIPMENT, LLC	$55,595.00	Build	Options
Central	Primary	GREAT SOUTHERN EQUIPMENT, LLC	$55,595.00	Build	Options
Southern	Primary	GREAT SOUTHERN EQUIPMENT, LLC	$55,595.00	Build	Options

Bid Award

Contract: FSA26-EQU24.0, Equipment

Group: Excavator: Mini Hydraulic Excavator - 7,105 lbs. Operating Weight

Item: 107, Hyundai, HX35AZ, HX35AZ

Description: Refer FSA Base Specifications PDF document.

Model Upgrade/Downgrade:

Zone	Rank	Vendor	Price	Build File	Options File
Western	Primary	National Equipment Dealers, LLC	$54,933.00	Build	Options
Northern	Primary	National Equipment Dealers, LLC	$54,933.00	Build	Options
Central	Primary	National Equipment Dealers, LLC	$54,933.00	Build	Options
Southern	Primary	National Equipment Dealers, LLC	$54,933.00	Build	Options

Bid Award

Contract: FSA26-EQU24.0, Equipment

Group: Excavator: Mini Hydraulic Excavator - 7,105 lbs. Operating Weight

Item: 108, John Deere, 35P, 35P

Description: Refer FSA Base Specifications PDF document.

Model Upgrade/Downgrade:

Zone	Rank	Vendor	Price	Build File	Options File
Western	Primary	Everglades Equipment Group	$51,500.00	Build	Options
	Alternate	Dobbs Equipment, LLC	$56,560.00	Build	Options
Northern	Primary	Everglades Equipment Group	$51,500.00	Build	Options
	Alternate	Dobbs Equipment, LLC	$56,560.00	Build	Options
Central	Primary	Everglades Equipment Group	$51,500.00	Build	Options
	Alternate	Dobbs Equipment, LLC	$55,560.00	Build	Options
Southern	Primary	Everglades Equipment Group	$51,500.00	Build	Options
	Alternate	Dobbs Equipment, LLC	$55,560.00	Build	Options

Bid Award

Contract: FSA26-EQU24.0, Equipment

Group: Excavator: Mini Hydraulic Excavator - 7,105 lbs. Operating Weight

Item: 109, Kubota, U35, U35-4R1

Description: Refer FSA Base Specifications PDF document.

Model Upgrade/Downgrade:

Zone	Rank	Vendor	Price	Build File	Options File
Western	Primary	Creel Tractor Company	$41,429.00	Build	Options
Northern	Primary Alternate	Creel Tractor Company Florida Coast Equipment, Inc.	$41,229.00 $42,921.00	Build Build	Options Options
Central	Primary Alternate	Creel Tractor Company Florida Coast Equipment, Inc.	$40,929.00 $42,921.00	Build Build	Options Options
Southern	Primary Alternate	Creel Tractor Company Florida Coast Equipment, Inc.	$40,679.00 $42,921.00	Build Build	Options Options

Bid Award

Contract: FSA26-EQU24.0, Equipment

Group: Excavator: Mini Hydraulic Excavator - 7,105 lbs. Operating Weight

Item: 110, New Holland, Compact Excavator, E37C

Description: Refer FSA Base Specifications PDF document.

Model Upgrade/Downgrade:

Zone	Rank	Vendor	Price	Build File	Options File
Western	Primary	Love Power Equipment, Inc	$59,000.00	Build	Options
Northern	Primary	Love Power Equipment, Inc	$59,000.00	Build	Options
Central	Primary	Love Power Equipment, Inc	$58,000.00	Build	Options
Southern	Primary	Love Power Equipment, Inc	$59,000.00	Build	Options

Bid Award

Contract: FSA26-EQU24.0, Equipment

Group: Excavator: Mini Hydraulic Excavator - 7,105 lbs. Operating Weight

Item: 112, Takeuchi, TB240, TB240

Description: Refer FSA Base Specifications PDF document.

Model Upgrade/Downgrade:

Zone	Rank	Vendor	Price	Build File	Options File
Western	Primary	Cowin Equipment Company	$53,987.00	Build	Options
Northern	Primary	Alta Construction Equipment Florida, LLC	$54,000.00	Build	Options
Central	Primary	Alta Construction Equipment Florida, LLC	$54,000.00	Build	Options
Southern	Primary	Alta Construction Equipment Florida, LLC	$54,000.00	Build	Options

Bid Award

Contract: FSA26-EQU24.0, Equipment

Group: Excavator: Mini Hydraulic Excavator - 7,105 lbs. Operating Weight

Item: 113, Volvo, EC37, EC37

Description: Refer FSA Base Specifications PDF document.

Model Upgrade/Downgrade:

Zone	Rank	Vendor	Price	Build File	Options File
Western	Primary	Cowin Equipment Company	$60,095.00	Build	Options
Northern	Primary	Alta Construction Equipment Florida, LLC	$60,000.00	Build	Options
Central	Primary	Alta Construction Equipment Florida, LLC	$60,000.00	Build	Options
Southern	Primary	Alta Construction Equipment Florida, LLC	$60,000.00	Build	Options

Bid Award

Contract: FSA26-EQU24.0, Equipment

Group: Excavator: Mini Hydraulic Excavator - 7,105 lbs. Operating Weight

Item: 114, Yanmar, Vi035-7, Vi035-7

Description: Refer FSA Base Specifications PDF document.

Model Upgrade/Downgrade:

Zone	Rank	Vendor	Price	Build File	Options File
Western	Primary	National Equipment Dealers, LLC	$64,300.00	Build	Options
Northern	Primary	National Equipment Dealers, LLC	$64,300.00	Build	Options
Central	Primary	National Equipment Dealers, LLC	$64,300.00	Build	Options
Southern	Primary	National Equipment Dealers, LLC	$64,300.00	Build	Options

Bid Award

Contract: FSA26-EQU24.0, Equipment

Group: Excavator: Telescopic Excavator - 45,000 lbs. Operating Weight - Tracked Type

Item: 115, Gradall, XL4200, XL4200

Description: Refer FSA Base Specifications PDF document.

Model Upgrade/Downgrade:

Zone	Rank	Vendor	Price	Build File	Options File
Western	Primary	GREAT SOUTHERN EQUIPMENT, LLC	$434,650.00	Build	Options
Northern	Primary	GREAT SOUTHERN EQUIPMENT, LLC	$434,650.00	Build	Options
Central	Primary	GREAT SOUTHERN EQUIPMENT, LLC	$434,650.00	Build	Options
Southern	Primary	GREAT SOUTHERN EQUIPMENT, LLC	$434,650.00	Build	Options

Bid Award

Contract: FSA26-EQU24.0, Equipment

Group: Excavator: Telescopic Excavator - 47,000 lbs. Operating Weight - 6x6 Wheeled Type

Item: 116, Gradall, XL4100, XL4100

Description: Refer FSA Base Specifications PDF document.

Model Upgrade/Downgrade:

Zone	Rank	Vendor	Price	Build File	Options File
Western	Primary	GREAT SOUTHERN EQUIPMENT, LLC	$608,922.00	Build	Options
Northern	Primary	GREAT SOUTHERN EQUIPMENT, LLC	$608,922.00	Build	Options
Central	Primary	GREAT SOUTHERN EQUIPMENT, LLC	$608,922.00	Build	Options
Southern	Primary	GREAT SOUTHERN EQUIPMENT, LLC	$608,922.00	Build	Options

Bid Award

Contract: FSA26-EQU24.0, Equipment

Group: Excavator: Vacuum Excavator - Trailer Mounted

Item: 118, Truvac, TRXX, TRXX 800

Description: Refer FSA Base Specifications PDF document.

Model Upgrade/Downgrade:

Zone	Rank	Vendor	Price	Build File	Options File
Western	Primary	Environmental Products Group	$142,484.00	Build	Options
Northern	Primary	Environmental Products Group	$142,484.00	Build	Options
Central	Primary	Environmental Products Group	$142,484.00	Build	Options
Southern	Primary	Environmental Products Group	$142,484.00	Build	Options

Bid Award

Contract: FSA26-EQU24.0, Equipment

Group: Excavator: Vacuum Excavator - Trailer Mounted

Item: 119, Vac-Con, Mudslinger, MS800

Description: Refer FSA Base Specifications PDF document.

Model Upgrade/Downgrade:

Zone	Rank	Vendor	Price	Build File	Options File
Western	Primary	Southern Sewer Equipment Sales	$145,261.00	Build	Options
Northern	Primary	Southern Sewer Equipment Sales	$145,261.00	Build	Options
Central	Primary	Southern Sewer Equipment Sales	$145,261.00	Build	Options
Southern	Primary	Southern Sewer Equipment Sales	$145,261.00	Build	Options

Bid Award

Contract: FSA26-EQU24.0, Equipment

Group: Excavator: Vacuum Excavator - Trailer Mounted

Item: 120, Vermeer, LP873SDT, LP873SDT

Description: Refer FSA Base Specifications PDF document.

Model Upgrade/Downgrade:

Zone	Rank	Vendor	Price	Build File	Options File
Western	Primary	Vermeer Southeast Sales	$123,854.00	Build	Options
Northern	Primary	Vermeer Southeast Sales	$123,854.00	Build	Options
Central	Primary	Vermeer Southeast Sales	$123,854.00	Build	Options
Southern	Primary	Vermeer Southeast Sales	$123,854.00	Build	Options

Bid Award

Contract: FSA26-EQU24.0, Equipment

Group: Excavator: Vacuum Excavator Body, Truck Mounted - 12 cubic yd.

Item: 122, Gapvax, VHE, 1012

Description: Refer FSA Base Specifications PDF document.

Model Upgrade/Downgrade:

Zone	Rank	Vendor	Price	Build File	Options File
Western	Primary	Evervac Equipment	$399,402.00	Build	Options
Northern	Primary	Evervac Equipment	$399,402.00	Build	Options
Central	Primary	Evervac Equipment	$399,402.00	Build	Options
Southern	Primary	Evervac Equipment	$399,402.00	Build	Options

Bid Award

Contract: FSA26-EQU24.0, Equipment

Group: Excavator: Vacuum Excavator Body, Truck Mounted - 12 cubic yd.

Item: 123, Truvac, HXX, HXX

Description: Refer FSA Base Specifications PDF document.

Model Upgrade/Downgrade:

Zone	Rank	Vendor	Price	Build File	Options File
Western	Primary	Environmental Products Group	$402,542.00	Build	Options
Northern	Primary	Environmental Products Group	$402,542.00	Build	Options
Central	Primary	Environmental Products Group	$402,542.00	Build	Options
Southern	Primary	Environmental Products Group	$402,542.00	Build	Options

Bid Award

Contract: FSA26-EQU24.0, Equipment

Group: Excavator: Vacuum Excavator Body, Truck Mounted - 12 cubic yd.

Item: 124, Sewer Equipment, Ramvac, HX-12

Description: Refer FSA Base Specifications PDF document.

Model Upgrade/Downgrade:

Zone	Rank	Vendor	Price	Build File	Options File
Western	Primary	Jet-Vac Equipment Company, LLC	$399,148.00	Build	Options
Northern	Primary	Jet-Vac Equipment Company, LLC	$399,148.00	Build	Options
Central	Primary	Jet-Vac Equipment Company, LLC	$399,148.00	Build	Options
Southern	Primary	Jet-Vac Equipment Company, LLC	$399,148.00	Build	Options

Bid Award

Contract: FSA26-EQU24.0, Equipment

Group: Excavator: Vacuum Excavator Body, Truck Mounted - 12 cubic yd.

Item: 125, Vac-Con, MXT, VMXTPD3612/1100

Description: Refer FSA Base Specifications PDF document.

Model Upgrade/Downgrade:

Zone	Rank	Vendor	Price	Build File	Options File
Western	Primary	Southern Sewer Equipment Sales	$371,523.00	Build	Options
Northern	Primary	Southern Sewer Equipment Sales	$371,523.00	Build	Options
Central	Primary	Southern Sewer Equipment Sales	$371,523.00	Build	Options
Southern	Primary	Southern Sewer Equipment Sales	$371,523.00	Build	Options

Bid Award

Contract: FSA26-EQU24.0, Equipment

Group: Excavator: Vacuum Excavator Body, Truck Mounted - 12 cubic yd.

Item: 126, Vermeer, Vacuum Excavator, VXT300

Description: Refer FSA Base Specifications PDF document.

Model Upgrade/Downgrade:

Zone	Rank	Vendor	Price	Build File	Options File
Western	Primary	Vermeer Southeast Sales	$439,719.00	Build	Options
Northern	Primary	Vermeer Southeast Sales	$439,719.00	Build	Options
Central	Primary	Vermeer Southeast Sales	$439,719.00	Build	Options
Southern	Primary	Vermeer Southeast Sales	$439,719.00	Build	Options

Bid Award

Contract: FSA26-EQU24.0, Equipment

Group: Excavator: Wheeled Hydraulic Excavator - 42,000 lbs. Operating Weight

Item: 127, Case, WX210E, WX21OE

Description: Refer FSA Base Specifications PDF document.

Model Upgrade/Downgrade:

Zone	Rank	Vendor	Price	Build File	Options File
Western	Primary	Innovative Equipment Services 2 LLC CASE Power & Equipment of Florida	$344,759.00	Build	Options
Northern	Primary	Innovative Equipment Services 2 LLC CASE Power & Equipment of Florida	$344,759.00	Build	Options
Central	Primary	Innovative Equipment Services 2 LLC CASE Power & Equipment of Florida	$344,759.00	Build	Options
Southern	Primary	Innovative Equipment Services 2 LLC CASE Power & Equipment of Florida	$344,759.00	Build	Options

Bid Award

Contract: FSA26-EQU24.0, Equipment

Group: Excavator: Wheeled Hydraulic Excavator - 42,000 lbs. Operating Weight

Item: 128, Caterpillar, M318, M318

Description: Refer FSA Base Specifications PDF document.

Model Upgrade/Downgrade:

Zone	Rank	Vendor	Price	Build File	Options File
Western	Primary	Ring Power Corporation	$312,721.00	Build	Options
Northern	Primary	Ring Power Corporation	$312,721.00	Build	Options
Central	Primary	Ring Power Corporation	$312,721.00	Build	Options
Southern	Primary	Kelly Tractor Co	$290,700.00	Build	Options

Bid Award

Contract: FSA26-EQU24.0, Equipment

Group: Excavator: Wheeled Hydraulic Excavator - 42,000 lbs. Operating Weight

Item: 129, DEVELON, DX210W-7K, DX210W-7K

Description: Refer FSA Base Specifications PDF document.

Model Upgrade/Downgrade:

Zone	Rank	Vendor	Price	Build File	Options File
Western	Primary	HD CONSTRUCTION EQUIPMENT DEVELON NORTH AMERICA LLC	$230,309.00	Build	Options
Northern	Primary	HD CONSTRUCTION EQUIPMENT DEVELON NORTH AMERICA LLC	$230,309.00	Build	Options
Central	Primary	HD CONSTRUCTION EQUIPMENT DEVELON NORTH AMERICA LLC	$230,309.00	Build	Options
Southern	Primary	HD CONSTRUCTION EQUIPMENT DEVELON NORTH AMERICA LLC	$230,309.00	Build	Options

Bid Award

Contract: FSA26-EQU24.0, Equipment

Group: Excavator: Wheeled Hydraulic Excavator - 42,000 lbs. Operating Weight

Item: 131, Volvo, EW180, EW180

Description: Refer FSA Base Specifications PDF document.

Model Upgrade/Downgrade:

Zone	Rank	Vendor	Price	Build File	Options File
Western	Primary	Cowin Equipment Company	$284,540.00	Build	Options
Northern	Primary	Alta Construction Equipment Florida, LLC	$286,000.00	Build	Options
Central	Primary	Alta Construction Equipment Florida, LLC	$286,000.00	Build	Options
Southern	Primary	Alta Construction Equipment Florida, LLC	$286,000.00	Build	Options

Bid Award

Contract: FSA26-EQU24.0, Equipment

Group: Excavator: Wheeled Hydraulic Excavator - 42,000 lbs. Operating Weight

Item: 654, Hyundai, HW210A, HW210A

Description: Refer FSA Base Specifications PDF document.

Model Upgrade/Downgrade:

Zone	Rank	Vendor	Price	Build File	Options File
Western	Primary	National Equipment Dealers, LLC	$296,307.00	Build	Options
Northern	Primary	National Equipment Dealers, LLC	$296,307.00	Build	Options
Central	Primary	National Equipment Dealers, LLC	$296,307.00	Build	Options
Southern	Primary	National Equipment Dealers, LLC	$296,307.00	Build	Options

Bid Award

Contract: FSA26-EQU24.0, Equipment

Group: Forklift: Cushion Tire - 4,000 lbs. Capacity

Item: 132, Caterpillar, GC20CN, GC20CN

Description: Refer FSA Base Specifications PDF document.

Model Upgrade/Downgrade:

Zone	Rank	Vendor	Price	Build File	Options File
Western	Primary	Ring Power Corporation	$54,653.00	Build	Options
Northern	Primary	Ring Power Corporation	$54,653.00	Build	Options
Central	Primary	Ring Power Corporation	$54,653.00	Build	Options
Southern	Primary	Kelly Tractor Co	$35,990.00	Build	Options

Bid Award

Contract: FSA26-EQU24.0, Equipment

Group: Forklift: Cushion Tire - 4,000 lbs. Capacity

Item: 133, Clark, S20C, S20C

Description: Refer FSA Base Specifications PDF document.

Model Upgrade/Downgrade:

Zone	Rank	Vendor	Price	Build File	Options File
Western	Primary	National Lift Truck Service	$31,647.00	Build	Options
Northern	Primary	National Lift Truck Service	$31,647.00	Build	Options
Central	Primary	National Lift Truck Service	$31,647.00	Build	Options
Southern	Primary	National Lift Truck Service	$31,197.00	Build	Options

Bid Award

Contract: FSA26-EQU24.0, Equipment

Group: Forklift: Cushion Tire - 4,000 lbs. Capacity

Item: 134, Crown, CGC20SC-9, CGC20SC-9

Description: Refer FSA Base Specifications PDF document.

Model Upgrade/Downgrade:

Zone	Rank	Vendor	Price	Build File	Options File
Western	Primary	Federal Contracts LLC DBA Federal Contracts Company	$44,131.00	Build	Options
Northern	Primary	Federal Contracts LLC DBA Federal Contracts Company	$44,131.00	Build	Options
Central	Primary	Federal Contracts LLC DBA Federal Contracts Company	$44,131.00	Build	Options
Southern	Primary	Federal Contracts LLC DBA Federal Contracts Company	$44,131.00	Build	Options

Bid Award

Contract: FSA26-EQU24.0, Equipment

Group: Forklift: Cushion Tire - 4,000 lbs. Capacity

Item: 135, Hangcha, FP20C, CPYD20-XH31B1-C

Description: Refer FSA Base Specifications PDF document.

Model Upgrade/Downgrade:

Zone	Rank	Vendor	Price	Build File	Options File
Western	Primary	National Lift Truck Service	$25,950.00	Build	Options
Northern	Primary	National Lift Truck Service	$25,950.00	Build	Options
Central	Primary	National Lift Truck Service	$25,950.00	Build	Options
Southern	Primary	National Lift Truck Service	$25,950.00	Build	Options

Bid Award

Contract: FSA26-EQU24.0, Equipment

Group: Forklift: Cushion Tire - 4,000 lbs. Capacity

Item: 137, Hyster, S40A, S40A

Description: Refer FSA Base Specifications PDF document.

Model Upgrade/Downgrade:

Zone	Rank	Vendor	Price	Build File	Options File
Western	Primary	Federal Contracts LLC DBA Federal Contracts Company	$42,152.00	Build	Options
Northern	Primary	Federal Contracts LLC DBA Federal Contracts Company	$42,152.00	Build	Options
Central	Primary	Federal Contracts LLC DBA Federal Contracts Company	$42,152.00	Build	Options
Southern	Primary	Federal Contracts LLC DBA Federal Contracts Company	$42,152.00	Build	Options

Bid Award

Contract: FSA26-EQU24.0, Equipment

Group: Forklift: Cushion Tire - 4,000 lbs. Capacity

Item: 138, Hyundai, 25LC-9, 25LC-9

Description: Refer FSA Base Specifications PDF document.

Model Upgrade/Downgrade:

Zone	Rank	Vendor	Price	Build File	Options File
Western	Primary	National Lift Truck Service	$30,800.00	Build	Options
Northern	Primary	National Lift Truck Service	$30,800.00	Build	Options
Central	Primary	National Lift Truck Service	$30,800.00	Build	Options
Southern	Primary	National Lift Truck Service	$30,298.00	Build	Options

Bid Award

Contract: FSA26-EQU24.0, Equipment

Group: Forklift: Cushion Tire - 4,000 lbs. Capacity

Item: 139, LuigGong, CLG2020G-C, CLG2020G-C

Description: Refer FSA Base Specifications PDF document.

Model Upgrade/Downgrade:

Zone	Rank	Vendor	Price	Build File	Options File
Western	Primary	Love Power Equipment, Inc	$34,000.00	Build	Options
Northern	Primary	Love Power Equipment, Inc	$34,000.00	Build	Options
Central	Primary	Love Power Equipment, Inc	$32,200.00	Build	Options
Southern	Primary	Love Power Equipment, Inc	$34,500.00	Build	Options

Bid Award

Contract: FSA26-EQU24.0, Equipment

Group: Forklift: Cushion Tire - 4,000 lbs. Capacity

Item: 140, Mitsubishi, FGC20CN, FGC20CN

Description: Refer FSA Base Specifications PDF document.

Model Upgrade/Downgrade:

Zone	Rank	Vendor	Price	Build File	Options File
Western	Primary	Ring Power Corporation	$48,402.00	Build	Options
Northern	Primary	Ring Power Corporation	$48,402.00	Build	Options
Central	Primary	Ring Power Corporation	$48,402.00	Build	Options
Southern	Primary	Kelly Tractor Co	$33,470.00	Build	Options

Bid Award

Contract: FSA26-EQU24.0, Equipment

Group: Forklift: Cushion Tire - 4,000 lbs. Capacity

Item: 141, Toyota, 50-8FGCU20, 50-8FGCU20

Description: Refer FSA Base Specifications PDF document.

Model Upgrade/Downgrade:

Zone	Rank	Vendor	Price	Build File	Options File
Western	Primary	Southern States ToyotaLift	$33,939.00	Build	Options
Northern	Primary	Southern States ToyotaLift	$33,939.00	Build	Options
Central	Primary	Southern States ToyotaLift	$33,939.00	Build	Options
Southern	Primary	Southern States ToyotaLift	$33,939.00	Build	Options

Bid Award

Contract: FSA26-EQU24.0, Equipment

Group: Forklift: Rough Terrain Forklift - 5,000 lbs. Capacity

Item: 142, Case, 586H, 586H

Description: Refer FSA Base Specifications PDF document.

Model Upgrade/Downgrade:

Zone	Rank	Vendor	Price	Build File	Options File
Western	Primary	Innovative Equipment Services 2 LLC CASE Power & Equipment of Florida	$108,475.00	Build	Options
Northern	Primary	Innovative Equipment Services 2 LLC CASE Power & Equipment of Florida	$108,475.00	Build	Options
Central	Primary	Innovative Equipment Services 2 LLC CASE Power & Equipment of Florida	$108,475.00	Build	Options
Southern	Primary	Innovative Equipment Services 2 LLC CASE Power & Equipment of Florida	$108,475.00	Build	Options

Bid Award

Contract: FSA26-EQU24.0, Equipment

Group: Forklift: Rough Terrain Forklift - 5,000 lbs. Capacity

Item: 143, Hangcha, RT25, CPCD25-XW98C-RT4

Description: Refer FSA Base Specifications PDF document.

Model Upgrade/Downgrade:

Zone	Rank	Vendor	Price	Build File	Options File
Western	Primary	National Lift Truck Service	$50,836.00	Build	Options
Northern	Primary	National Lift Truck Service	$50,836.00	Build	Options
Central	Primary	National Lift Truck Service	$50,836.00	Build	Options
Southern	Primary	National Lift Truck Service	$50,335.00	Build	Options

Bid Award

Contract: FSA26-EQU24.0, Equipment

Group: Forklift: Rough Terrain Forklift - 5,000 lbs. Capacity

Item: 144, Harlo, HP5000, HP5000

Description: Refer FSA Base Specifications PDF document.

Model Upgrade/Downgrade:

Zone	Rank	Vendor	Price	Build File	Options File
Western	Primary	Dobbs Equipment, LLC	$122,465.00	Build	Options
Northern	Primary	Dobbs Equipment, LLC	$122,465.00	Build	Options
Central	Primary Alternate	Dobbs Equipment, LLC Kelly Tractor Co	$122,465.00 $124,500.00	Build Build	Options Options
Southern	Primary Alternate	Dobbs Equipment, LLC Kelly Tractor Co	$122,465.00 $124,500.00	Build Build	Options Options

Bid Award

Contract: FSA26-EQU24.0, Equipment

Group: Forklift: Rough Terrain Forklift - 5,000 lbs. Capacity

Item: 146, JLG, AUSA, C401H

Description: Refer FSA Base Specifications PDF document.

Model Upgrade/Downgrade:

Zone	Rank	Vendor	Price	Build File	Options File
Western	Primary	Everglades Equipment Group	$97,000.00	Build	Options
Northern	Primary	Everglades Equipment Group	$97,000.00	Build	Options
Central	Primary	Everglades Equipment Group	$97,000.00	Build	Options
Southern	Primary Alternate	Everglades Equipment Group Kelly Tractor Co	$97,000.00 $109,865.00	Build Build	Options Options

Bid Award

Contract: FSA26-EQU24.0, Equipment

Group: Forklift: Rough Terrain Forklift - 5,000 lbs. Capacity

Item: 147, Lift King, 6M42, 6M42

Description: Refer FSA Base Specifications PDF document.

Model Upgrade/Downgrade:

Zone	Rank	Vendor	Price	Build File	Options File
Western	Primary	Ring Power Corporation	$124,635.00	Build	Options
Northern	Primary	Ring Power Corporation	$124,635.00	Build	Options
Central	Primary	Ring Power Corporation	$124,635.00	Build	Options
Southern					

Bid Award

Contract: FSA26-EQU24.0, Equipment

Group: Forklift: Rough Terrain Forklift - 5,000 lbs. Capacity

Item: 149, Manitou, M30-4, M30-4

Description: Refer FSA Base Specifications PDF document.

Model Upgrade/Downgrade:

Zone	Rank	Vendor	Price	Build File	Options File
Western	Primary Alternate	Southern States ToyotaLift National Equipment Dealers, LLC	$60,700.00 $102,360.00	Build Build	Options Options
Northern	Primary Alternate	Southern States ToyotaLift National Equipment Dealers, LLC	$60,700.00 $102,360.00	Build Build	Options Options
Central	Primary Alternate	Southern States ToyotaLift National Equipment Dealers, LLC	$60,700.00 $102,360.00	Build Build	Options Options
Southern	Primary Alternate	Southern States ToyotaLift National Equipment Dealers, LLC	$60,700.00 $102,360.00	Build Build	Options Options

Bid Award

Contract: FSA26-EQU24.0, Equipment

Group: Forklift: Rough Terrain Forklift - 5,000 lbs. Capacity

Item: 150, Master Craft, MC Series, MC-5

Description: Refer FSA Base Specifications PDF document.

Model Upgrade/Downgrade:

Zone	Rank	Vendor	Price	Build File	Options File
Western					
Northern					
Central					
Southern	Primary	Kelly Tractor Co	$122,550.00	Build	Options

Bid Award

Contract: FSA26-EQU24.0, Equipment

Group: Forklift: Telescopic Tool Carrier/Telehandler

Item: 151, Bobcat, TL723, TL723

Description: Refer FSA Base Specifications PDF document.

Model Upgrade/Downgrade:

Zone	Rank	Vendor	Price	Build File	Options File
Western	Primary	Doosan Bobcat North America, Inc.	$117,992.00	Build	Options
Northern	Primary	Doosan Bobcat North America, Inc.	$117,992.00	Build	Options
Central	Primary	Doosan Bobcat North America, Inc.	$117,992.00	Build	Options
Southern	Primary	Doosan Bobcat North America, Inc.	$117,992.00	Build	Options

Bid Award

Contract: FSA26-EQU24.0, Equipment

Group: Forklift: Telescopic Tool Carrier/Telehandler

Item: 152, Caterpillar, TH0842, TH0842

Description: Refer FSA Base Specifications PDF document.

Model Upgrade/Downgrade:

Zone	Rank	Vendor	Price	Build File	Options File
Western	Primary	Ring Power Corporation	$177,056.00	Build	Options
Northern	Primary	Ring Power Corporation	$177,056.00	Build	Options
Central	Primary	Ring Power Corporation	$177,056.00	Build	Options
Southern	Primary	Kelly Tractor Co	$163,550.00	Build	Options

Bid Award

Contract: FSA26-EQU24.0, Equipment

Group: Forklift: Telescopic Tool Carrier/Telehandler

Item: 153, Genie, GTH-844, GTH-844

Description: Refer FSA Base Specifications PDF document.

Model Upgrade/Downgrade:

Zone	Rank	Vendor	Price	Build File	Options File
Western	Primary	National Lift Truck Service	$149,990.00	Build	Options
Northern	Primary	National Lift Truck Service	$149,990.00	Build	Options
Central	Primary	National Lift Truck Service	$149,990.00	Build	Options
Southern	Primary Alternate	National Lift Truck Service Kelly Tractor Co	$149,315.00 $165,200.00	Build Build	Options Options

Bid Award

Contract: FSA26-EQU24.0, Equipment

Group: Forklift: Telescopic Tool Carrier/Telehandler

Item: 154, JLG, 943, 943

Description: Refer FSA Base Specifications PDF document.

Model Upgrade/Downgrade:

Zone	Rank	Vendor	Price	Build File	Options File
Western	Primary	Everglades Equipment Group	$148,000.00	Build	Options
Northern	Primary	Everglades Equipment Group	$148,000.00	Build	Options
Central	Primary	Everglades Equipment Group	$148,000.00	Build	Options
Southern	Primary Alternate	Everglades Equipment Group Kelly Tractor Co	$148,000.00 $158,640.00	Build Build	Options Options

Bid Award

Contract: FSA26-EQU24.0, Equipment

Group: Forklift: Telescopic Tool Carrier/Telehandler

Item: 155, JLG, Skytrak, 10042

Description: Refer FSA Base Specifications PDF document.

Model Upgrade/Downgrade:

Zone	Rank	Vendor	Price	Build File	Options File
Western	Primary	Everglades Equipment Group	$158,500.00	Build	Options
Northern	Primary	Everglades Equipment Group	$158,500.00	Build	Options
Central	Primary	Everglades Equipment Group	$158,500.00	Build	Options
Southern	Primary	Everglades Equipment Group	$158,500.00	Build	Options

Bid Award

Contract: FSA26-EQU24.0, Equipment

Group: Forklift: Telescopic Tool Carrier/Telehandler

Item: 156, JLG, Rotating Telehandler, R1370

Description: Refer FSA Base Specifications PDF document.

Model Upgrade/Downgrade:

Zone	Rank	Vendor	Price	Build File	Options File
Western	Primary	Everglades Equipment Group	$336,400.00	Build	Options
Northern	Primary	Everglades Equipment Group	$336,400.00	Build	Options
Central	Primary	Everglades Equipment Group	$336,400.00	Build	Options
Southern	Primary Alternate	Everglades Equipment Group Kelly Tractor Co	$336,400.00 $369,420.00	Build Build	Options Options

Bid Award

Contract: FSA26-EQU24.0, Equipment

Group: Forklift: Telescopic Tool Carrier/Telehandler

Item: 157, Magni, Rotating Telehandler, RTH13.72

Description: Refer FSA Base Specifications PDF document.

Model Upgrade/Downgrade:

Zone	Rank	Vendor	Price	Build File	Options File
Western					
Northern					
Central	Primary	Kelly Tractor Co	$350,000.00	Build	Options
Southern	Primary	Kelly Tractor Co	$350,000.00	Build	Options

Bid Award

Contract: FSA26-EQU24.0, Equipment

Group: Forklift: Telescopic Tool Carrier/Telehandler

Item: 158, Manitou, MTA842, MTA842

Description: Refer FSA Base Specifications PDF document.

Model Upgrade/Downgrade:

Zone	Rank	Vendor	Price	Build File	Options File
Western	Primary	National Equipment Dealers, LLC	$171,530.00	Build	Options
Northern	Primary	National Equipment Dealers, LLC	$171,530.00	Build	Options
Central					
Southern	Primary	National Equipment Dealers, LLC	$171,530.00	Build	Options

Bid Award

Contract: FSA26-EQU24.0, Equipment

Group: Forklift: Telescopic Tool Carrier/Telehandler

Item: 160, Snorkel, SR9244, SR9244

Description: Refer FSA Base Specifications PDF document.

Model Upgrade/Downgrade:

Zone	Rank	Vendor	Price	Build File	Options File
Western	Primary	National Lift Truck Service	$165,500.00	Build	Options
Northern	Primary	National Lift Truck Service	$165,500.00	Build	Options
Central	Primary	National Lift Truck Service	$165,500.00	Build	Options
Southern	Primary	National Lift Truck Service	$165,500.00	Build	Options

Bid Award

Contract: FSA26-EQU24.0, Equipment

Group: Forklift: Telescopic Tool Carrier/Telehandler

Item: 161, Xtreme, XR843-B, XR843-B

Description: Refer FSA Base Specifications PDF document.

Model Upgrade/Downgrade:

Zone	Rank	Vendor	Price	Build File	Options File
Western	Primary	National Lift Truck Service	$185,675.00	Build	Options
Northern	Primary	National Lift Truck Service	$185,675.00	Build	Options
Central	Primary	National Lift Truck Service	$185,675.00	Build	Options
Southern	Primary	National Lift Truck Service	$183,990.00	Build	Options

Bid Award

Contract: FSA26-EQU24.0, Equipment

Group: Generator: 125kW Stationary

Item: 163, Blue Star Power Systems, JD125-02, JD125-02

Description: Refer FSA Base Specifications PDF document.

Model Upgrade/Downgrade:

Zone	Rank	Vendor	Price	Build File	Options File
Western	Primary	MID-FLORIDA DIESEL INC	$60,245.00	Build	Options
	Primary	MID-FLORIDA DIESEL INC	$60,245.00	Build	Options
Northern	Primary	MID-FLORIDA DIESEL INC	$60,245.00	Build	Options
	Primary	MID-FLORIDA DIESEL INC	$60,245.00	Build	Options
Central	Primary	MID-FLORIDA DIESEL INC	$60,245.00	Build	Options
	Primary	MID-FLORIDA DIESEL INC	$60,245.00	Build	Options
Southern	Primary	MID-FLORIDA DIESEL INC	$60,245.00	Build	Options
	Primary	MID-FLORIDA DIESEL INC	$60,245.00	Build	Options

Bid Award

Contract: FSA26-EQU24.0, Equipment

Group: Generator: 125kW Stationary

Item: 164, Caterpillar, D125, D125

Description: Refer FSA Base Specifications PDF document.

Model Upgrade/Downgrade:

Zone	Rank	Vendor	Price	Build File	Options File
Western	Primary	Ring Power Corporation	$77,820.00	Build	Options
Northern	Primary	Ring Power Corporation	$77,820.00	Build	Options
Central	Primary	Ring Power Corporation	$77,820.00	Build	Options
Southern	Primary	Pantropic Power	$75,463.00	Build	Options

Bid Award

Contract: FSA26-EQU24.0, Equipment

Group: Generator: 125kW Stationary

Item: 165, Generac, SD130, SD130

Description: Refer FSA Base Specifications PDF document.

Model Upgrade/Downgrade:

Zone	Rank	Vendor	Price	Build File	Options File
Western	Primary	ACF Industrial Energy	$54,400.00	Build	Options
Northern	Primary	ACF Industrial Energy	$54,400.00	Build	Options
Central	Primary	ACF Industrial Energy	$54,400.00	Build	Options
Southern					

Bid Award

Contract: FSA26-EQU24.0, Equipment

Group: Generator: 125kW Stationary

Item: 166, Gillette, SPJD-1550, SPJD-1550

Description: Refer FSA Base Specifications PDF document.

Model Upgrade/Downgrade:

Zone	Rank	Vendor	Price	Build File	Options File
Western	Primary	Emergency Standby Power, LLC	$52,892.00	Build	Options
Northern	Primary	Emergency Standby Power, LLC	$52,892.00	Build	Options
Central	Primary	Emergency Standby Power, LLC	$52,892.00	Build	Options
Southern	Primary	Emergency Standby Power, LLC	$52,892.00	Build	Options

Bid Award

Contract: FSA26-EQU24.0, Equipment

Group: Generator: 125kW Stationary

Item: 167, HiPower, HDI-130F, HDI-130F

Description: Refer FSA Base Specifications PDF document.

Model Upgrade/Downgrade:

Zone	Rank	Vendor	Price	Build File	Options File
Western	Primary	GenServe LLC	$58,381.00	Build	Options
Northern	Primary	GenServe LLC	$58,381.00	Build	Options
Central	Primary	GenServe LLC	$58,381.00	Build	Options
Southern	Primary	GenServe LLC	$58,381.00	Build	Options

Bid Award

Contract: FSA26-EQU24.0, Equipment

Group: Generator: 125kW Stationary

Item: 168, Olympian, OD125, OD125

Description: Refer FSA Base Specifications PDF document.

Model Upgrade/Downgrade:

Zone	Rank	Vendor	Price	Build File	Options File
Western	Primary	GenServe LLC	$44,463.00	Build	Options
Northern	Primary	GenServe LLC	$44,463.00	Build	Options
Central	Primary	GenServe LLC	$44,463.00	Build	Options
Southern	Primary	GenServe LLC	$44,463.00	Build	Options

Bid Award

Contract: FSA26-EQU24.0, Equipment

Group: Generator: 125kW Stationary

Item: 169, On Demand Power Systems, 125kW Standby, ODPSJD125-01

Description: Refer FSA Base Specifications PDF document.

Model Upgrade/Downgrade:

Zone	Rank	Vendor	Price	Build File	Options File
Western	Primary	MID-FLORIDA DIESEL INC	$74,902.00	Build	Options
Northern	Primary	MID-FLORIDA DIESEL INC	$74,902.00	Build	Options
Central	Primary	MID-FLORIDA DIESEL INC	$74,902.00	Build	Options
Southern	Primary	MID-FLORIDA DIESEL INC	$74,902.00	Build	Options

Bid Award

Contract: FSA26-EQU24.0, Equipment

Group: Generator: 125kW Stationary

Item: 171, Taylor Power Systems, TDS125, TDS125

Description: Refer FSA Base Specifications PDF document.

Model Upgrade/Downgrade:

Zone	Rank	Vendor	Price	Build File	Options File
Western	Primary	Taylor Power Systems, Inc.	$58,656.00	Build	Options
Northern	Primary	Taylor Power Systems, Inc.	$58,656.00	Build	Options
Central	Primary	Taylor Power Systems, Inc.	$58,656.00	Build	Options
Southern	Primary	Taylor Power Systems, Inc.	$58,656.00	Build	Options

Bid Award

Contract: FSA26-EQU24.0, Equipment

Group: Generator: 125kW Stationary

Item: 172, Tradewinds, T125, T125

Description: Refer FSA Base Specifications PDF document.

Model Upgrade/Downgrade:

Zone	Rank	Vendor	Price	Build File	Options File
Western	Primary	Tradewinds Power Corp.	$94,500.00	Build	Options
Northern	Primary	Tradewinds Power Corp.	$94,500.00	Build	Options
Central	Primary	Tradewinds Power Corp.	$94,500.00	Build	Options
Southern	Primary	Tradewinds Power Corp.	$94,500.00	Build	Options

Bid Award

Contract: FSA26-EQU24.0, Equipment

Group: Generator: 150kW Mobile

Item: 175, Blue Star Power Systems, VD150-02FT4MP, VD150-02FT4MP

Description: Refer FSA Base Specifications PDF document.

Model Upgrade/Downgrade:

Zone	Rank	Vendor	Price	Build File	Options File
Western	Primary	MID-FLORIDA DIESEL INC	$133,722.00	Build	Options
Northern	Primary	MID-FLORIDA DIESEL INC	$133,722.00	Build	Options
Central	Primary	MID-FLORIDA DIESEL INC	$133,722.00	Build	Options
Southern	Primary	MID-FLORIDA DIESEL INC	$133,722.00	Build	Options

Bid Award

Contract: FSA26-EQU24.0, Equipment

Group: Generator: 150kW Mobile

Item: 176, Bobcat, PG190WCU-3A-T4F, PG190WCU-3A-T4F

Description: Refer FSA Base Specifications PDF document.

Model Upgrade/Downgrade:

Zone	Rank	Vendor	Price	Build File	Options File
Western	Primary	Doosan Bobcat North America, Inc.	$123,525.00	Build	Options
Northern	Primary	Doosan Bobcat North America, Inc.	$123,525.00	Build	Options
Central	Primary	Doosan Bobcat North America, Inc.	$123,525.00	Build	Options
Southern	Primary	Doosan Bobcat North America, Inc.	$123,525.00	Build	Options

Bid Award

Contract: FSA26-EQU24.0, Equipment

Group: Generator: 150kW Mobile

Item: 177, Caterpillar, XQ230, XQ230

Description: Refer FSA Base Specifications PDF document.

Model Upgrade/Downgrade:

Zone	Rank	Vendor	Price	Build File	Options File
Western	Primary	Ring Power Corporation	$208,690.00	Build	Options
Northern	Primary	Ring Power Corporation	$208,690.00	Build	Options
Central	Primary	Ring Power Corporation	$208,690.00	Build	Options
Southern	Primary	Pantropic Power	$203,998.00	Build	Options

Bid Award

Contract: FSA26-EQU24.0, Equipment

Group: Generator: 150kW Mobile

Item: 178, Generac, MDG175DF4, MDG175DF4

Description: Refer FSA Base Specifications PDF document.

Model Upgrade/Downgrade:

Zone	Rank	Vendor	Price	Build File	Options File
Western	Primary	ACF Industrial Energy	$110,225.00	Build	Options
Northern	Primary	ACF Industrial Energy	$110,225.00	Build	Options
Central	Primary	ACF Industrial Energy	$110,225.00	Build	Options
Southern					

Bid Award

Contract: FSA26-EQU24.0, Equipment

Group: Generator: 150kW Mobile

Item: 179, HiPower, HRJW-190 T4F, HRJW-190 T4F

Description: Refer FSA Base Specifications PDF document.

Model Upgrade/Downgrade:

Zone	Rank	Vendor	Price	Build File	Options File
Western	Primary	GenServe LLC	$127,003.00	Build	Options
Northern	Primary	GenServe LLC	$127,003.00	Build	Options
Central	Primary	GenServe LLC	$127,003.00	Build	Options
Southern	Primary	GenServe LLC	$127,003.00	Build	Options

Bid Award

Contract: FSA26-EQU24.0, Equipment

Group: Generator: 150kW Mobile

Item: 180, MULTIQUIP, DCA180SSJU4F3, DCA180SSJU4F3

Description: Refer FSA Base Specifications PDF document.

Model Upgrade/Downgrade:

Zone	Rank	Vendor	Price	Build File	Options File
Western	Primary	Federal Contracts LLC DBA Federal Contracts Company	$158,704.00	Build	Options
Northern	Primary	Federal Contracts LLC DBA Federal Contracts Company	$158,704.00	Build	Options
Central	Primary	Federal Contracts LLC DBA Federal Contracts Company	$158,704.00	Build	Options
Southern	Primary	Federal Contracts LLC DBA Federal Contracts Company	$158,704.00	Build	Options

Bid Award

Contract: FSA26-EQU24.0, Equipment

Group: Generator: 150kW Mobile

Item: 181, On Demand Power Systems, 150 kW Mobile Generator, ODPSJD150M-01

Description: Refer FSA Base Specifications PDF document.

Model Upgrade/Downgrade:

Zone	Rank	Vendor	Price	Build File	Options File
Western	Primary	MID-FLORIDA DIESEL INC	$142,738.00	Build	Options
Northern	Primary	MID-FLORIDA DIESEL INC	$142,738.00	Build	Options
Central	Primary	MID-FLORIDA DIESEL INC	$142,738.00	Build	Options
Southern	Primary	MID-FLORIDA DIESEL INC	$142,738.00	Build	Options

Bid Award

Contract: FSA26-EQU24.0, Equipment

Group: Generator: 150kW Mobile

Item: 183, Taylor Power Systems, TM225, TM225

Description: Refer FSA Base Specifications PDF document.

Model Upgrade/Downgrade:

Zone	Rank	Vendor	Price	Build File	Options File
Western	Primary	Taylor Power Systems, Inc.	$135,000.00	Build	Options
Northern	Primary	Taylor Power Systems, Inc.	$135,000.00	Build	Options
Central	Primary	Taylor Power Systems, Inc.	$135,000.00	Build	Options
Southern	Primary	Taylor Power Systems, Inc.	$135,000.00	Build	Options

Bid Award

Contract: FSA26-EQU24.0, Equipment

Group: Generator: 150kW Mobile

Item: 184, Tradewinds, T150M, T150M

Description: Refer FSA Base Specifications PDF document.

Model Upgrade/Downgrade:

Zone	Rank	Vendor	Price	Build File	Options File
Western	Primary	Tradewinds Power Corp.	$186,000.00	Build	Options
Northern	Primary	Tradewinds Power Corp.	$186,000.00	Build	Options
Central	Primary	Tradewinds Power Corp.	$186,000.00	Build	Options
Southern	Primary	Tradewinds Power Corp.	$186,000.00	Build	Options

Bid Award

Contract: FSA26-EQU24.0, Equipment

Group: Generator: 500kW Mobile

Item: 189, Blue Star Power Systems, VD550-02FT4MP, VD550-02FT4MP

Description: Refer FSA Base Specifications PDF document.

Model Upgrade/Downgrade:

Zone	Rank	Vendor	Price	Build File	Options File
Western					
Northern	Primary	MID-FLORIDA DIESEL INC	$281,829.00	Build	Options
Central	Primary	MID-FLORIDA DIESEL INC	$281,829.00	Build	Options
Southern	Primary	MID-FLORIDA DIESEL INC	$281,829.00	Build	Options

Bid Award

Contract: FSA26-EQU24.0, Equipment

Group: Generator: 500kW Mobile

Item: 190, Caterpillar, XQ570, XQ570

Description: Refer FSA Base Specifications PDF document.

Model Upgrade/Downgrade:

Zone	Rank	Vendor	Price	Build File	Options File
Western	Primary	Ring Power Corporation	$558,890.00	Build	Options
Northern	Primary	Ring Power Corporation	$558,890.00	Build	Options
Central	Primary	Ring Power Corporation	$558,890.00	Build	Options
Southern	Primary	Pantropic Power	$507,234.00	Build	Options

Bid Award

Contract: FSA26-EQU24.0, Equipment

Group: Generator: 500kW Mobile

Item: 191, Generac, 570KVA, MDE570P

Description: Refer FSA Base Specifications PDF document.

Model Upgrade/Downgrade:

Zone	Rank	Vendor	Price	Build File	Options File
Western	Primary	ACF Industrial Energy	$245,000.00	Build	Options
Northern	Primary	ACF Industrial Energy	$245,000.00	Build	Options
Central	Primary	ACF Industrial Energy	$245,000.00	Build	Options
Southern					

Bid Award

Contract: FSA26-EQU24.0, Equipment

Group: Generator: 500kW Mobile

Item: 196, Tradewinds, T500M, T500M

Description: Refer FSA Base Specifications PDF document.

Model Upgrade/Downgrade:

Zone	Rank	Vendor	Price	Build File	Options File
Western	Primary	Tradewinds Power Corp.	$595,000.00	Build	Options
Northern	Primary	Tradewinds Power Corp.	$595,000.00	Build	Options
Central	Primary	Tradewinds Power Corp.	$595,000.00	Build	Options
Southern	Primary	Tradewinds Power Corp.	$595,000.00	Build	Options

Bid Award

Contract: FSA26-EQU24.0, Equipment

Group: Generator: 500kW Stationary

Item: 198, Blue Star Power Systems, VD500-01, VD500-01

Description: Refer FSA Base Specifications PDF document.

Model Upgrade/Downgrade:

Zone	Rank	Vendor	Price	Build File	Options File
Western	Primary	MID-FLORIDA DIESEL INC	$137,271.00	Build	Options
Northern	Primary	MID-FLORIDA DIESEL INC	$137,271.00	Build	Options
Central	Primary	MID-FLORIDA DIESEL INC	$137,271.00	Build	Options
Southern	Primary	MID-FLORIDA DIESEL INC	$137,271.00	Build	Options

Bid Award

Contract: FSA26-EQU24.0, Equipment

Group: Generator: 500kW Stationary

Item: 199, Caterpillar, C15, C15

Description: Refer FSA Base Specifications PDF document.

Model Upgrade/Downgrade:

Zone	Rank	Vendor	Price	Build File	Options File
Western	Primary	Ring Power Corporation	$216,820.00	Build	Options
Northern	Primary	Ring Power Corporation	$216,820.00	Build	Options
Central	Primary	Ring Power Corporation	$216,820.00	Build	Options
Southern	Primary	Pantropic Power	$212,568.00	Build	Options

Bid Award

Contract: FSA26-EQU24.0, Equipment

Group: Generator: 500kW Stationary

Item: 200, Generac, SD500, SD500

Description: Refer FSA Base Specifications PDF document.

Model Upgrade/Downgrade:

Zone	Rank	Vendor	Price	Build File	Options File
Western	Primary	ACF Industrial Energy	$135,600.00	Build	Options
Northern	Primary	ACF Industrial Energy	$135,600.00	Build	Options
Central	Primary	ACF Industrial Energy	$135,600.00	Build	Options
Southern					

Bid Award

Contract: FSA26-EQU24.0, Equipment

Group: Generator: 500kW Stationary

Item: 201, Gillette, SPVD-5000, SPVD-5000

Description: Refer FSA Base Specifications PDF document.

Model Upgrade/Downgrade:

Zone	Rank	Vendor	Price	Build File	Options File
Western	Primary	Emergency Standby Power, LLC	$129,237.00	Build	Options
Northern	Primary	Emergency Standby Power, LLC	$129,237.00	Build	Options
Central	Primary	Emergency Standby Power, LLC	$129,237.00	Build	Options
Southern	Primary	Emergency Standby Power, LLC	$129,237.00	Build	Options

Bid Award

Contract: FSA26-EQU24.0, Equipment

Group: Generator: 500kW Stationary

Item: 202, HiPower, HDI-515V, HDI-515V

Description: Refer FSA Base Specifications PDF document.

Model Upgrade/Downgrade:

Zone	Rank	Vendor	Price	Build File	Options File
Western	Primary	GenServe LLC	$142,572.00	Build	Options
Northern	Primary	GenServe LLC	$142,572.00	Build	Options
Central	Primary	GenServe LLC	$142,572.00	Build	Options
Southern	Primary	GenServe LLC	$142,572.00	Build	Options

Bid Award

Contract: FSA26-EQU24.0, Equipment

Group: Generator: 500kW Stationary

Item: 204, Taylor Power Systems, TD500, TD500

Description: Refer FSA Base Specifications PDF document.

Model Upgrade/Downgrade:

Zone	Rank	Vendor	Price	Build File	Options File
Western	Primary	Taylor Power Systems, Inc.	$125,450.00	Build	Options
Northern	Primary	Taylor Power Systems, Inc.	$125,450.00	Build	Options
Central	Primary	Taylor Power Systems, Inc.	$125,450.00	Build	Options
Southern	Primary	Taylor Power Systems, Inc.	$125,450.00	Build	Options

Bid Award

Contract: FSA26-EQU24.0, Equipment

Group: Generator: 500kW Stationary

Item: 205, Tradewinds, T500, T500

Description: Refer FSA Base Specifications PDF document.

Model Upgrade/Downgrade:

Zone	Rank	Vendor	Price	Build File	Options File
Western	Primary	Tradewinds Power Corp.	$184,500.00	Build	Options
Northern	Primary	Tradewinds Power Corp.	$184,500.00	Build	Options
Central	Primary	Tradewinds Power Corp.	$184,500.00	Build	Options
Southern	Primary	Tradewinds Power Corp.	$184,500.00	Build	Options

Bid Award

Contract: FSA26-EQU24.0, Equipment

Group: Generator: 60kW Stationary

Item: 207, Blue Star Power Systems, JD60-02, JD60-02

Description: Refer FSA Base Specifications PDF document.

Model Upgrade/Downgrade:

Zone	Rank	Vendor	Price	Build File	Options File
Western	Primary	MID-FLORIDA DIESEL INC	$42,266.00	Build	Options
Northern	Primary	MID-FLORIDA DIESEL INC	$42,266.00	Build	Options
Central	Primary	MID-FLORIDA DIESEL INC	$42,266.00	Build	Options
Southern	Primary	MID-FLORIDA DIESEL INC	$42,266.00	Build	Options

Bid Award

Contract: FSA26-EQU24.0, Equipment

Group: Generator: 60kW Stationary

Item: 208, Caterpillar, D60, D60

Description: Refer FSA Base Specifications PDF document.

Model Upgrade/Downgrade:

Zone	Rank	Vendor	Price	Build File	Options File
Western	Primary	Ring Power Corporation	$48,990.00	Build	Options
Northern	Primary	Ring Power Corporation	$48,990.00	Build	Options
Central	Primary	Ring Power Corporation	$48,990.00	Build	Options
Southern	Primary	Pantropic Power	$51,400.00	Build	Options

Bid Award

Contract: FSA26-EQU24.0, Equipment

Group: Generator: 60kW Stationary

Item: 209, Generac, SD060, SD060

Description: Refer FSA Base Specifications PDF document.

Model Upgrade/Downgrade:

Zone	Rank	Vendor	Price	Build File	Options File
Western	Primary	ACF Industrial Energy	$36,700.00	Build	Options
Northern	Primary	ACF Industrial Energy	$36,700.00	Build	Options
Central	Primary	ACF Industrial Energy	$36,700.00	Build	Options
Southern					

Bid Award

Contract: FSA26-EQU24.0, Equipment

Group: Generator: 60kW Stationary

Item: 210, Gillette, SPD-600, SPD-600

Description: Refer FSA Base Specifications PDF document.

Model Upgrade/Downgrade:

Zone	Rank	Vendor	Price	Build File	Options File
Western	Primary	Emergency Standby Power, LLC	$41,966.00	Build	Options
Northern	Primary	Emergency Standby Power, LLC	$41,966.00	Build	Options
Central	Primary	Emergency Standby Power, LLC	$41,966.00	Build	Options
Southern	Primary	Emergency Standby Power, LLC	$41,966.00	Build	Options

Bid Award

Contract: FSA26-EQU24.0, Equipment

Group: Generator: 60kW Stationary

Item: 211, Gillette, SPJD-600, SPJD-600

Description: Refer FSA Base Specifications PDF document.

Model Upgrade/Downgrade:

Zone	Rank	Vendor	Price	Build File	Options File
Western	Primary	Emergency Standby Power, LLC	$37,932.00	Build	Options
Northern	Primary	Emergency Standby Power, LLC	$37,932.00	Build	Options
Central	Primary	Emergency Standby Power, LLC	$37,932.00	Build	Options
Southern	Primary	Emergency Standby Power, LLC	$37,932.00	Build	Options

Bid Award

Contract: FSA26-EQU24.0, Equipment

Group: Generator: 60kW Stationary

Item: 212, HiPower, HDI-60F, HDI-60F

Description: Refer FSA Base Specifications PDF document.

Model Upgrade/Downgrade:

Zone	Rank	Vendor	Price	Build File	Options File
Western	Primary	GenServe LLC	$47,341.00	Build	Options
Northern	Primary	GenServe LLC	$47,341.00	Build	Options
Central	Primary	GenServe LLC	$47,341.00	Build	Options
Southern	Primary	GenServe LLC	$47,341.00	Build	Options

Bid Award

Contract: FSA26-EQU24.0, Equipment

Group: Generator: 60kW Stationary

Item: 213, Olympian, OD60, OD60

Description: Refer FSA Base Specifications PDF document.

Model Upgrade/Downgrade:

Zone	Rank	Vendor	Price	Build File	Options File
Western	Primary	GenServe LLC	$34,853.00	Build	Options
Northern	Primary	GenServe LLC	$34,853.00	Build	Options
Central	Primary	GenServe LLC	$34,853.00	Build	Options
Southern	Primary	GenServe LLC	$34,853.00	Build	Options

Bid Award

Contract: FSA26-EQU24.0, Equipment

Group: Generator: 60kW Stationary

Item: 214, On Demand Power Systems, 60kW Standby, ODPSJD60-01

Description: Refer FSA Base Specifications PDF document.

Model Upgrade/Downgrade:

Zone	Rank	Vendor	Price	Build File	Options File
Western	Primary	MID-FLORIDA DIESEL INC	$56,221.00	Build	Options
Northern	Primary	MID-FLORIDA DIESEL INC	$56,221.00	Build	Options
Central	Primary	MID-FLORIDA DIESEL INC	$56,221.00	Build	Options
Southern	Primary	MID-FLORIDA DIESEL INC	$56,221.00	Build	Options

Bid Award

Contract: FSA26-EQU24.0, Equipment

Group: Generator: 60kW Stationary

Item: 216, Taylor Power Systems, TDS60, TDS60

Description: Refer FSA Base Specifications PDF document.

Model Upgrade/Downgrade:

Zone	Rank	Vendor	Price	Build File	Options File
Western	Primary	Taylor Power Systems, Inc.	$42,750.00	Build	Options
Northern	Primary	Taylor Power Systems, Inc.	$42,750.00	Build	Options
Central	Primary	Taylor Power Systems, Inc.	$42,750.00	Build	Options
Southern	Primary	Taylor Power Systems, Inc.	$42,750.00	Build	Options

Bid Award

Contract: FSA26-EQU24.0, Equipment

Group: Generator: 60kW Stationary

Item: 217, Tradewinds, T60, T60

Description: Refer FSA Base Specifications PDF document.

Model Upgrade/Downgrade:

Zone	Rank	Vendor	Price	Build File	Options File
Western	Primary	Tradewinds Power Corp.	$63,000.00	Build	Options
Northern	Primary	Tradewinds Power Corp.	$63,000.00	Build	Options
Central	Primary	Tradewinds Power Corp.	$63,000.00	Build	Options
Southern	Primary	Tradewinds Power Corp.	$63,000.00	Build	Options

Bid Award

Contract: FSA26-EQU24.0, Equipment

Group: Horizontal Directional Drill

Item: 218, Vermeer, D24X40 S3, D24X40 S3

Description: Refer FSA Base Specifications PDF document.

Model Upgrade/Downgrade:

Zone	Rank	Vendor	Price	Build File	Options File
Western	Primary	Vermeer Southeast Sales	$439,230.00	Build	Options
Northern	Primary	Vermeer Southeast Sales	$439,230.00	Build	Options
Central	Primary	Vermeer Southeast Sales	$439,230.00	Build	Options
Southern	Primary	Vermeer Southeast Sales	$439,230.00	Build	Options

Bid Award

Contract: FSA26-EQU24.0, Equipment

Group: Leaf Collector: Trailer Mounted

Item: 220, ODB, DCL800TM, DCL800TM

Description: Refer FSA Base Specifications PDF document.

Model Upgrade/Downgrade:

Zone	Rank	Vendor	Price	Build File	Options File
Western	Primary	Environmental Products Group	$179,532.00	Build	Options
Northern	Primary	Environmental Products Group	$179,532.00	Build	Options
Central	Primary	Environmental Products Group	$179,532.00	Build	Options
Southern	Primary	Environmental Products Group	$179,532.00	Build	Options

Bid Award

Contract: FSA26-EQU24.0, Equipment

Group: Lift: Articulated Boom Lift - Self Propelled Tracked

Item: 221, CTE, Traccess, 170/56

Description: Refer FSA Base Specifications PDF document.

Model Upgrade/Downgrade:

Zone	Rank	Vendor	Price	Build File	Options File
Western	Primary	Vermeer Southeast Sales	$95,760.00	Build	Options
Northern	Primary	Vermeer Southeast Sales	$95,760.00	Build	Options
Central	Primary	Vermeer Southeast Sales	$95,760.00	Build	Options
Southern	Primary	Vermeer Southeast Sales	$95,760.00	Build	Options

Bid Award

Contract: FSA26-EQU24.0, Equipment

Group: Lift: Articulated Boom Lift - Self Propelled Tracked

Item: 655, JLG, X500AJ, X500AJ

Description: Refer FSA Base Specifications PDF document.

Model Upgrade/Downgrade:

Zone	Rank	Vendor	Price	Build File	Options File
Western	Primary	Kelly Tractor Co	$151,190.00	Build	Options
Northern	Primary	Kelly Tractor Co	$151,190.00	Build	Options
Central	Primary	Kelly Tractor Co	$151,190.00	Build	Options
Southern	Primary	Kelly Tractor Co	$151,190.00	Build	Options

Bid Award

Contract: FSA26-EQU24.0, Equipment

Group: Lift: Scissor Lift - Self Propelled

Item: 222, Genie, GS-1932, GS-1932

Description: Refer FSA Base Specifications PDF document.

Model Upgrade/Downgrade:

Zone	Rank	Vendor	Price	Build File	Options File
Western	Primary	National Lift Truck Service	$16,488.00	Build	Options
	Alternate	Ring Power Corporation	$18,165.00	Build	Options
Northern	Primary	National Lift Truck Service	$16,488.00	Build	Options
	Alternate	Ring Power Corporation	$18,165.00	Build	Options
Central	Primary	National Lift Truck Service	$16,488.00	Build	Options
	Alternate	Ring Power Corporation	$18,165.00	Build	Options
Southern	Primary	Kelly Tractor Co	$15,950.00	Build	Options
	Alternate	National Lift Truck Service	$16,135.00	Build	Options

Bid Award

Contract: FSA26-EQU24.0, Equipment

Group: Lift: Scissor Lift - Self Propelled

Item: 223, Haulotte, Optimum 1931 AC, Optimum 1931 AC

Description: Refer FSA Base Specifications PDF document.

Model Upgrade/Downgrade:

Zone	Rank	Vendor	Price	Build File	Options File
Western	Primary	Love Power Equipment, Inc	$16,200.00	Build	Options
Northern	Primary	Love Power Equipment, Inc	$15,912.00	Build	Options
Central	Primary	Love Power Equipment, Inc	$15,912.00	Build	Options
Southern	Primary	Love Power Equipment, Inc	$16,200.00	Build	Options

Bid Award

Contract: FSA26-EQU24.0, Equipment

Group: Lift: Scissor Lift - Self Propelled

Item: 224, JLG, JLG ES1932, JLG ES1932

Description: Refer FSA Base Specifications PDF document.

Model Upgrade/Downgrade:

Zone	Rank	Vendor	Price	Build File	Options File
Western	Primary	Everglades Equipment Group	$16,200.00	Build	Options
Northern	Primary	Everglades Equipment Group	$16,200.00	Build	Options
Central	Primary	Everglades Equipment Group	$16,200.00	Build	Options
Southern	Primary Alternate	Everglades Equipment Group Kelly Tractor Co	$16,200.00 $19,300.00	Build Build	Options Options

Bid Award

Contract: FSA26-EQU24.0, Equipment

Group: Lift: Scissor Lift - Self Propelled

Item: 225, Snorkel, S3219 PLUS, S3219 PLUS

Description: Refer FSA Base Specifications PDF document.

Model Upgrade/Downgrade:

Zone	Rank	Vendor	Price	Build File	Options File
Western	Primary	National Lift Truck Service	$14,750.00	Build	Options
Northern	Primary	National Lift Truck Service	$14,750.00	Build	Options
Central	Primary	National Lift Truck Service	$14,750.00	Build	Options
Southern	Primary	National Lift Truck Service	$14,250.00	Build	Options

Bid Award

Contract: FSA26-EQU24.0, Equipment

Group: Light Tower: Hybrid Light Tower

Item: 226, Signal Power, HT444PC, HT444PC

Description: Refer FSA Base Specifications PDF document.

Model Upgrade/Downgrade:

Zone	Rank	Vendor	Price	Build File	Options File
Western	Primary	Federal Contracts LLC DBA Federal Contracts Company	$45,254.00	Build	Options
Northern	Primary	Federal Contracts LLC DBA Federal Contracts Company	$45,254.00	Build	Options
Central	Primary	Federal Contracts LLC DBA Federal Contracts Company	$45,254.00	Build	Options
Southern	Primary	Federal Contracts LLC DBA Federal Contracts Company	$45,254.00	Build	Options

Bid Award

Contract: FSA26-EQU24.0, Equipment

Group: Light Tower: Light Tower - Trailer Mounted

Item: 228, Bobcat, PL65WKUB-60HZ-T4F, PL65WKUB-60HZ-T4F

Description: Refer FSA Base Specifications PDF document.

Model Upgrade/Downgrade:

Zone	Rank	Vendor	Price	Build File	Options File
Western	Primary	Doosan Bobcat North America, Inc.	$12,196.00	Build	Options
Northern	Primary	Doosan Bobcat North America, Inc.	$12,196.00	Build	Options
Central	Primary	Doosan Bobcat North America, Inc.	$12,196.00	Build	Options
Southern	Primary	Doosan Bobcat North America, Inc.	$12,196.00	Build	Options

Bid Award

Contract: FSA26-EQU24.0, Equipment

Group: Light Tower: Light Tower - Trailer Mounted

Item: 229, Generac, MLT4060, MLT4060

Description: Refer FSA Base Specifications PDF document.

Model Upgrade/Downgrade:

Zone	Rank	Vendor	Price	Build File	Options File
Western	Primary	ACF Industrial Energy	$16,850.00	Build	Options
Northern	Primary	ACF Industrial Energy	$16,850.00	Build	Options
Central	Primary	ACF Industrial Energy	$16,850.00	Build	Options
Southern					

Bid Award

Contract: FSA26-EQU24.0, Equipment

Group: Light Tower: Light Tower - Trailer Mounted

Item: 230, Wacker Neuson, LTT6, LTT6

Description: Refer FSA Base Specifications PDF document.

Model Upgrade/Downgrade:

Zone	Rank	Vendor	Price	Build File	Options File
Western	Primary	Kelly Tractor Co	$13,800.00	Build	Options
Northern	Primary	Kelly Tractor Co	$13,800.00	Build	Options
Central	Primary	Kelly Tractor Co	$13,400.00	Build	Options
Southern	Primary	Kelly Tractor Co	$13,400.00	Build	Options

Bid Award

Contract: FSA26-EQU24.0, Equipment

Group: Light Tower: Light Tower - Trailer Mounted

Item: 231, Wanco, WLT-4MK6K, WLT-4MK6K

Description: Refer FSA Base Specifications PDF document.

Model Upgrade/Downgrade:

Zone	Rank	Vendor	Price	Build File	Options File
Western	Primary	Tradewinds Power Corp.	$13,970.00	Build	Options
	Alternate	Aramsco Inc	$14,475.00	Build	Options
	Alternate	Jet-Vac Equipment Company, LLC	$18,099.00	Build	Options
Northern	Primary	Tradewinds Power Corp.	$13,970.00	Build	Options
	Alternate	Aramsco Inc	$14,475.00	Build	Options
	Alternate	Jet-Vac Equipment Company, LLC	$18,099.00	Build	Options
Central	Primary	Tradewinds Power Corp.	$13,970.00	Build	Options
	Alternate	Aramsco Inc	$14,475.00	Build	Options
	Alternate	Jet-Vac Equipment Company, LLC	$18,099.00	Build	Options
Southern	Primary	Tradewinds Power Corp.	$13,970.00	Build	Options
	Alternate	Aramsco Inc	$14,475.00	Build	Options
	Alternate	Jet-Vac Equipment Company, LLC	$18,099.00	Build	Options

Bid Award

Contract: FSA26-EQU24.0, Equipment

Group: Loader: Loader Backhoe - 4x4

Item: 232, Case, 580SN, 580SN

Description: Refer FSA Base Specifications PDF document.

Model Upgrade/Downgrade:

Zone	Rank	Vendor	Price	Build File	Options File
Western	Primary	Innovative Equipment Services 2 LLC CASE Power & Equipment of Florida	$141,000.00	Build	Options
Northern	Primary	Innovative Equipment Services 2 LLC CASE Power & Equipment of Florida	$141,000.00	Build	Options
Central	Primary	Innovative Equipment Services 2 LLC CASE Power & Equipment of Florida	$141,000.00	Build	Options
Southern	Primary	Innovative Equipment Services 2 LLC CASE Power & Equipment of Florida	$141,000.00	Build	Options

Bid Award

Contract: FSA26-EQU24.0, Equipment

Group: Loader: Loader Backhoe - 4x4

Item: 233, Caterpillar, 416, 416

Description: Refer FSA Base Specifications PDF document.

Model Upgrade/Downgrade:

Zone	Rank	Vendor	Price	Build File	Options File
Western	Primary	Ring Power Corporation	$120,106.00	Build	Options
Northern	Primary	Ring Power Corporation	$120,106.00	Build	Options
Central	Primary	Ring Power Corporation	$120,106.00	Build	Options
Southern	Primary	Kelly Tractor Co	$112,630.00	Build	Options

Bid Award

Contract: FSA26-EQU24.0, Equipment

Group: Loader: Loader Backhoe - 4x4

Item: 234, John Deere, 310P, 310P

Description: Refer FSA Base Specifications PDF document.

Model Upgrade/Downgrade:

Zone	Rank	Vendor	Price	Build File	Options File
Western	Primary	Dobbs Equipment, LLC	$120,715.00	Build	Options
Northern	Primary	Dobbs Equipment, LLC	$120,715.00	Build	Options
Central	Primary	Dobbs Equipment, LLC	$118,105.00	Build	Options
Southern	Primary	Dobbs Equipment, LLC	$118,105.00	Build	Options

Bid Award

Contract: FSA26-EQU24.0, Equipment

Group: Loader: Loader Backhoe - 4x4

Item: 235, New Holland, Loader Backhoe, B95D

Description: Refer FSA Base Specifications PDF document.

Model Upgrade/Downgrade:

Zone	Rank	Vendor	Price	Build File	Options File
Western	Primary	Love Power Equipment, Inc	$108,500.00	Build	Options
Northern	Primary	Love Power Equipment, Inc	$107,000.00	Build	Options
Central	Primary	Love Power Equipment, Inc	$107,000.00	Build	Options
Southern	Primary	Love Power Equipment, Inc	$108,500.00	Build	Options

Bid Award

Contract: FSA26-EQU24.0, Equipment

Group: Loader: Mini Skid Steer - 1,000 lbs. Operating Capacity - Tracked Type, Stand Up Operator

Item: 237, Kubota, Stand On Track Loader, SCL1000

Description: Refer FSA Base Specifications PDF document.

Model Upgrade/Downgrade:

Zone	Rank	Vendor	Price	Build File	Options File
Western	Primary	Creel Tractor Company	$34,248.00	Build	Options
Northern	Primary Alternate	Florida Coast Equipment, Inc. Creel Tractor Company	$33,387.00 $33,948.00	Build Build	Options Options
Central	Primary Alternate	Florida Coast Equipment, Inc. Creel Tractor Company	$33,387.00 $33,648.00	Build Build	Options Options
Southern	Primary Alternate	Creel Tractor Company Florida Coast Equipment, Inc.	$33,348.00 $33,387.00	Build Build	Options Options

Bid Award

Contract: FSA26-EQU24.0, Equipment

Group: Loader: Mini Skid Steer - 1,000 lbs. Operating Capacity - Tracked Type, Stand Up Operator

Item: 238, Scag, Jackal, SJ1125-N-34-25KBD

Description: Refer FSA Base Specifications PDF document.

Model Upgrade/Downgrade:

Zone	Rank	Vendor	Price	Build File	Options File
Western	Primary	Green Thumb Palm Beach	$34,887.00	Build	Options
Northern	Primary	Green Thumb Palm Beach	$34,887.00	Build	Options
Central	Primary	Green Thumb Palm Beach	$34,887.00	Build	Options
Southern	Primary	Green Thumb Palm Beach	$34,887.00	Build	Options

Bid Award

Contract: FSA26-EQU24.0, Equipment

Group: Loader: Mini Skid Steer - 1,000 lbs. Operating Capacity - Tracked Type, Stand Up Operator

Item: 239, Vermeer, Mini Skid Steer, ML150

Description: Refer FSA Base Specifications PDF document.

Model Upgrade/Downgrade:

Zone	Rank	Vendor	Price	Build File	Options File
Western	Primary	Vermeer Southeast Sales	$60,603.00	Build	Options
Northern	Primary	Vermeer Southeast Sales	$60,603.00	Build	Options
Central	Primary	Vermeer Southeast Sales	$60,603.00	Build	Options
Southern	Primary	Vermeer Southeast Sales	$60,603.00	Build	Options

Bid Award

Contract: FSA26-EQU24.0, Equipment

Group: Loader: Mini Skid Steer - 1,000 lbs. Operating Capacity - Tracked Type, Stand Up Operator

Item: 656, Wacker Neuson, Utility Track Loader, SM100

Description: Refer FSA Base Specifications PDF document.

Model Upgrade/Downgrade:

Zone	Rank	Vendor	Price	Build File	Options File
Western					
Northern					
Central	Primary	Kelly Tractor Co	$46,225.00	Build	Options
Southern	Primary	Kelly Tractor Co	$46,225.00	Build	Options

Bid Award

Contract: FSA26-EQU24.0, Equipment

Group: Loader: Skid Steer - 1,850 lbs. Operating Capacity - Wheeled Type

Item: 240, Bobcat, S590, S590

Description: Refer FSA Base Specifications PDF document.

Model Upgrade/Downgrade:

Zone	Rank	Vendor	Price	Build File	Options File
Western	Primary	Doosan Bobcat North America, Inc.	$41,154.00	Build	Options
Northern	Primary	Doosan Bobcat North America, Inc.	$41,154.00	Build	Options
Central	Primary	Doosan Bobcat North America, Inc.	$41,154.00	Build	Options
Southern	Primary	Doosan Bobcat North America, Inc.	$41,154.00	Build	Options

Bid Award

Contract: FSA26-EQU24.0, Equipment

Group: Loader: Skid Steer - 1,850 lbs. Operating Capacity - Wheeled Type

Item: 241, Case, SV185B, SV185B

Description: Refer FSA Base Specifications PDF document.

Model Upgrade/Downgrade:

Zone	Rank	Vendor	Price	Build File	Options File
Western	Primary	Innovative Equipment Services 2 LLC CASE Power & Equipment of Florida	$57,134.00	Build	Options
Northern	Primary	Innovative Equipment Services 2 LLC CASE Power & Equipment of Florida	$57,134.00	Build	Options
Central	Primary	Innovative Equipment Services 2 LLC CASE Power & Equipment of Florida	$57,134.00	Build	Options
Southern	Primary	Innovative Equipment Services 2 LLC CASE Power & Equipment of Florida	$57,134.00	Build	Options

Bid Award

Contract: FSA26-EQU24.0, Equipment

Group: Loader: Skid Steer - 1,850 lbs. Operating Capacity - Wheeled Type

Item: 242, Caterpillar, 236D3, 236D3

Description: Refer FSA Base Specifications PDF document.

Model Upgrade/Downgrade:

Zone	Rank	Vendor	Price	Build File	Options File
Western	Primary	Ring Power Corporation	$54,428.00	Build	Options
Northern	Primary	Ring Power Corporation	$54,428.00	Build	Options
Central	Primary	Ring Power Corporation	$54,428.00	Build	Options
Southern	Primary	Kelly Tractor Co	$51,875.00	Build	Options

Bid Award

Contract: FSA26-EQU24.0, Equipment

Group: Loader: Skid Steer - 1,850 lbs. Operating Capacity - Wheeled Type

Item: 244, John Deere, 318P, 318P

Description: Refer FSA Base Specifications PDF document.

Model Upgrade/Downgrade:

Zone	Rank	Vendor	Price	Build File	Options File
Western	Primary	Everglades Equipment Group	$45,525.00	Build	Options
	Alternate	Dobbs Equipment, LLC	$53,295.00	Build	Options
Northern	Primary	Everglades Equipment Group	$45,525.00	Build	Options
	Alternate	Dobbs Equipment, LLC	$53,295.00	Build	Options
Central	Primary	Everglades Equipment Group	$45,525.00	Build	Options
	Alternate	Dobbs Equipment, LLC	$52,125.00	Build	Options
Southern	Primary	Everglades Equipment Group	$45,525.00	Build	Options
	Alternate	Dobbs Equipment, LLC	$52,125.00	Build	Options

Bid Award

Contract: FSA26-EQU24.0, Equipment

Group: Loader: Skid Steer - 1,850 lbs. Operating Capacity - Wheeled Type

Item: 245, Kubota, SSV65, SSV65

Description: Refer FSA Base Specifications PDF document.

Model Upgrade/Downgrade:

Zone	Rank	Vendor	Price	Build File	Options File
Western	Primary	Creel Tractor Company	$39,935.00	Build	Options
Northern	Primary Alternate	Creel Tractor Company Florida Coast Equipment, Inc.	$39,735.00 $40,598.00	Build Build	Options Options
Central	Primary Alternate	Creel Tractor Company Florida Coast Equipment, Inc.	$39,185.00 $40,598.00	Build Build	Options Options
Southern	Primary Alternate	Creel Tractor Company Florida Coast Equipment, Inc.	$38,460.00 $40,598.00	Build Build	Options Options

Bid Award

Contract: FSA26-EQU24.0, Equipment

Group: Loader: Skid Steer - 1,850 lbs. Operating Capacity - Wheeled Type

Item: 246, New Holland, Skid Steer Loader, L320

Description: Refer FSA Base Specifications PDF document.

Model Upgrade/Downgrade:

Zone	Rank	Vendor	Price	Build File	Options File
Western	Primary	Love Power Equipment, Inc	$54,140.00	Build	Options
Northern	Primary	Love Power Equipment, Inc	$53,140.00	Build	Options
Central	Primary	Love Power Equipment, Inc	$53,140.00	Build	Options
Southern	Primary	Love Power Equipment, Inc	$54,140.00	Build	Options

Bid Award

Contract: FSA26-EQU24.0, Equipment

Group: Loader: Skid Steer - 1,850 lbs. Operating Capacity - Wheeled Type

Item: 247, New Holland, Small Articulated Loader, ML12

Description: Refer FSA Base Specifications PDF document.

Model Upgrade/Downgrade:

Zone	Rank	Vendor	Price	Build File	Options File
Western	Primary	Love Power Equipment, Inc	$48,900.00	Build	Options
Northern	Primary	Love Power Equipment, Inc	$47,900.00	Build	Options
Central	Primary	Love Power Equipment, Inc	$47,900.00	Build	Options
Southern	Primary	Love Power Equipment, Inc	$48,900.00	Build	Options

Bid Award

Contract: FSA26-EQU24.0, Equipment

Group: Loader: Skid Steer - 2,800 lbs. Operating Capacity - Wheeled Type

Item: 248, Case, SV340B, SV340B

Description: Refer FSA Base Specifications PDF document.

Model Upgrade/Downgrade:

Zone	Rank	Vendor	Price	Build File	Options File
Western	Primary	Innovative Equipment Services 2 LLC CASE Power & Equipment of Florida	$75,333.00	Build	Options
Northern	Primary	Innovative Equipment Services 2 LLC CASE Power & Equipment of Florida	$75,333.00	Build	Options
Central	Primary	Innovative Equipment Services 2 LLC CASE Power & Equipment of Florida	$75,333.00	Build	Options
Southern	Primary	Innovative Equipment Services 2 LLC CASE Power & Equipment of Florida	$75,333.00	Build	Options

Bid Award

Contract: FSA26-EQU24.0, Equipment

Group: Loader: Skid Steer - 2,800 lbs. Operating Capacity - Wheeled Type

Item: 249, Caterpillar, 270, 270

Description: Refer FSA Base Specifications PDF document.

Model Upgrade/Downgrade:

Zone	Rank	Vendor	Price	Build File	Options File
Western	Primary	Ring Power Corporation	$76,137.00	Build	Options
Northern	Primary	Ring Power Corporation	$76,137.00	Build	Options
Central	Primary	Ring Power Corporation	$76,137.00	Build	Options
Southern	Primary	Kelly Tractor Co	$70,990.00	Build	Options

Bid Award

Contract: FSA26-EQU24.0, Equipment

Group: Loader: Skid Steer - 2,800 lbs. Operating Capacity - Wheeled Type

Item: 250, John Deere, 330P, 330P

Description: Refer FSA Base Specifications PDF document.

Model Upgrade/Downgrade:

Zone	Rank	Vendor	Price	Build File	Options File
Western	Primary Alternate	Everglades Equipment Group Dobbs Equipment, LLC	$59,025.00 $64,685.00	Build Build	Options Options
Northern	Primary Alternate	Everglades Equipment Group Dobbs Equipment, LLC	$59,025.00 $64,685.00	Build Build	Options Options
Central	Primary Alternate	Everglades Equipment Group Dobbs Equipment, LLC	$59,025.00 $63,225.00	Build Build	Options Options
Southern	Primary Alternate	Everglades Equipment Group Dobbs Equipment, LLC	$59,025.00 $63,225.00	Build Build	Options Options

Bid Award

Contract: FSA26-EQU24.0, Equipment

Group: Loader: Skid Steer - 2,800 lbs. Operating Capacity - Wheeled Type

Item: 252, New Holland, Skid Steer Loader, L334

Description: Refer FSA Base Specifications PDF document.

Model Upgrade/Downgrade:

Zone	Rank	Vendor	Price	Build File	Options File
Western	Primary	Love Power Equipment, Inc	$75,700.00	Build	Options
Northern	Primary	Love Power Equipment, Inc	$74,700.00	Build	Options
Central	Primary	Love Power Equipment, Inc	$74,700.00	Build	Options
Southern	Primary	Love Power Equipment, Inc	$75,700.00	Build	Options

Bid Award

Contract: FSA26-EQU24.0, Equipment

Group: Loader: Skid Steer - 3,100 lbs. Operating Capacity - Tracked Type

Item: 253, ASV, VT-100, VT-100

Description: Refer FSA Base Specifications PDF document.

Model Upgrade/Downgrade:

Zone	Rank	Vendor	Price	Build File	Options File
Western	Primary	National Equipment Dealers, LLC	$119,500.00	Build	Options
Northern	Primary	National Equipment Dealers, LLC	$119,500.00	Build	Options
Central	Primary	National Equipment Dealers, LLC	$119,500.00	Build	Options
Southern	Primary	National Equipment Dealers, LLC	$119,500.00	Build	Options

Bid Award

Contract: FSA26-EQU24.0, Equipment

Group: Loader: Skid Steer - 3,100 lbs. Operating Capacity - Tracked Type

Item: 255, Bobcat, T770, T770

Description: Refer FSA Base Specifications PDF document.

Model Upgrade/Downgrade:

Zone	Rank	Vendor	Price	Build File	Options File
Western	Primary	Doosan Bobcat North America, Inc.	$67,843.00	Build	Options
Northern	Primary	Doosan Bobcat North America, Inc.	$67,843.00	Build	Options
Central	Primary	Doosan Bobcat North America, Inc.	$67,843.00	Build	Options
Southern	Primary	Doosan Bobcat North America, Inc.	$67,843.00	Build	Options

Bid Award

Contract: FSA26-EQU24.0, Equipment

Group: Loader: Skid Steer - 3,100 lbs. Operating Capacity - Tracked Type

Item: 256, Case, TR310B, TR310B

Description: Refer FSA Base Specifications PDF document.

Model Upgrade/Downgrade:

Zone	Rank	Vendor	Price	Build File	Options File
Western	Primary	Innovative Equipment Services 2 LLC CASE Power & Equipment of Florida	$77,942.00	Build	Options
Northern	Primary	Innovative Equipment Services 2 LLC CASE Power & Equipment of Florida	$77,942.00	Build	Options
Central	Primary	Innovative Equipment Services 2 LLC CASE Power & Equipment of Florida	$77,942.00	Build	Options
Southern	Primary	Innovative Equipment Services 2 LLC CASE Power & Equipment of Florida	$77,942.00	Build	Options

Bid Award

Contract: FSA26-EQU24.0, Equipment

Group: Loader: Skid Steer - 3,100 lbs. Operating Capacity - Tracked Type

Item: 257, Caterpillar, 265, 265

Description: Refer FSA Base Specifications PDF document.

Model Upgrade/Downgrade:

Zone	Rank	Vendor	Price	Build File	Options File
Western	Primary	Ring Power Corporation	$88,266.00	Build	Options
Northern	Primary	Ring Power Corporation	$88,266.00	Build	Options
Central	Primary	Ring Power Corporation	$88,266.00	Build	Options
Southern	Primary	Kelly Tractor Co	$84,580.00	Build	Options

Bid Award

Contract: FSA26-EQU24.0, Equipment

Group: Loader: Skid Steer - 3,100 lbs. Operating Capacity - Tracked Type

Item: 258, DEVELON, DTL35, DTL35

Description: Refer FSA Base Specifications PDF document.

Model Upgrade/Downgrade:

Zone	Rank	Vendor	Price	Build File	Options File
Western	Primary	HD CONSTRUCTION EQUIPMENT DEVELON NORTH AMERICA LLC	$80,970.00	Build	Options
Northern	Primary	HD CONSTRUCTION EQUIPMENT DEVELON NORTH AMERICA LLC	$80,970.00	Build	Options
Central	Primary	HD CONSTRUCTION EQUIPMENT DEVELON NORTH AMERICA LLC	$80,970.00	Build	Options
Southern	Primary	HD CONSTRUCTION EQUIPMENT DEVELON NORTH AMERICA LLC	$80,970.00	Build	Options

Bid Award

Contract: FSA26-EQU24.0, Equipment

Group: Loader: Skid Steer - 3,100 lbs. Operating Capacity - Tracked Type

Item: 259, John Deere, 331P, 331P

Description: Refer FSA Base Specifications PDF document.

Model Upgrade/Downgrade:

Zone	Rank	Vendor	Price	Build File	Options File
Western	Primary	Everglades Equipment Group	$72,645.00	Build	Options
	Alternate	Dobbs Equipment, LLC	$77,385.00	Build	Options
Northern	Primary	Everglades Equipment Group	$72,645.00	Build	Options
	Alternate	Dobbs Equipment, LLC	$77,385.00	Build	Options
Central	Primary	Everglades Equipment Group	$72,645.00	Build	Options
	Alternate	Dobbs Equipment, LLC	$75,685.00	Build	Options
Southern	Primary	Everglades Equipment Group	$72,645.00	Build	Options
	Alternate	Dobbs Equipment, LLC	$75,685.00	Build	Options

Bid Award

Contract: FSA26-EQU24.0, Equipment

Group: Loader: Skid Steer - 3,100 lbs. Operating Capacity - Tracked Type

Item: 260, Kioti, TL750, TL750

Description: Refer FSA Base Specifications PDF document.

Model Upgrade/Downgrade:

Zone	Rank	Vendor	Price	Build File	Options File
Western	Primary	OCALA TRACTOR, LCC	$60,900.00	Build	Options
Northern	Primary	OCALA TRACTOR, LCC	$60,900.00	Build	Options
Central	Primary	OCALA TRACTOR, LCC	$60,900.00	Build	Options
Southern	Primary	OCALA TRACTOR, LCC	$60,900.00	Build	Options

Bid Award

Contract: FSA26-EQU24.0, Equipment

Group: Loader: Skid Steer - 3,100 lbs. Operating Capacity - Tracked Type

Item: 261, Kubota, SVL 75-3, SVL 75-3

Description: Refer FSA Base Specifications PDF document.

Model Upgrade/Downgrade:

Zone	Rank	Vendor	Price	Build File	Options File
Western	Primary	Creel Tractor Company	$56,240.00	Build	Options
Northern	Primary Alternate	Creel Tractor Company Florida Coast Equipment, Inc.	$55,990.00 $57,105.00	Build Build	Options Options
Central	Primary Alternate	Creel Tractor Company Florida Coast Equipment, Inc.	$55,690.00 $57,105.00	Build Build	Options Options
Southern	Primary Alternate	Creel Tractor Company Florida Coast Equipment, Inc.	$55,590.00 $57,105.00	Build Build	Options Options

Bid Award

Contract: FSA26-EQU24.0, Equipment

Group: Loader: Skid Steer - 3,100 lbs. Operating Capacity - Tracked Type

Item: 263, New Holland, Compact Track Loader, C332

Description: Refer FSA Base Specifications PDF document.

Model Upgrade/Downgrade:

Zone	Rank	Vendor	Price	Build File	Options File
Western	Primary	OCALA TRACTOR, LCC	$75,500.00	Build	Options
	Alternate	Love Power Equipment, Inc	$77,500.00	Build	Options
Northern	Primary	OCALA TRACTOR, LCC	$75,000.00	Build	Options
	Alternate	Love Power Equipment, Inc	$76,500.00	Build	Options
Central	Primary	OCALA TRACTOR, LCC	$75,000.00	Build	Options
	Alternate	Love Power Equipment, Inc	$76,500.00	Build	Options
Southern	Primary	OCALA TRACTOR, LCC	$75,500.00	Build	Options
	Alternate	Love Power Equipment, Inc	$77,500.00	Build	Options

Bid Award

Contract: FSA26-EQU24.0, Equipment

Group: Loader: Skid Steer - 3,100 lbs. Operating Capacity - Tracked Type

Item: 265, Takeuchi, TL12V2, TL12V2

Description: Refer FSA Base Specifications PDF document.

Model Upgrade/Downgrade:

Zone	Rank	Vendor	Price	Build File	Options File
Western	Primary	Cowin Equipment Company	$89,762.00	Build	Options
Northern	Primary	Alta Construction Equipment Florida, LLC	$90,000.00	Build	Options
Central	Primary	Alta Construction Equipment Florida, LLC	$90,000.00	Build	Options
Southern	Primary	Alta Construction Equipment Florida, LLC	$90,000.00	Build	Options

Bid Award

Contract: FSA26-EQU24.0, Equipment

Group: Loader: Skid Steer - 3,100 lbs. Operating Capacity - Tracked Type

Item: 266, Yanmar, TL100VS, TL100VS

Description: Refer FSA Base Specifications PDF document.

Model Upgrade/Downgrade:

Zone	Rank	Vendor	Price	Build File	Options File
Western	Primary	National Equipment Dealers, LLC	$105,000.00	Build	Options
Northern	Primary	National Equipment Dealers, LLC	$105,000.00	Build	Options
Central	Primary	National Equipment Dealers, LLC	$105,000.00	Build	Options
Southern	Primary	National Equipment Dealers, LLC	$105,000.00	Build	Options

Bid Award

Contract: FSA26-EQU24.0, Equipment

Group: Loader: Wheel Loader - 1.5 cubic yd.

Item: 267, Case, 321F, 321F

Description: Refer FSA Base Specifications PDF document.

Model Upgrade/Downgrade:

Zone	Rank	Vendor	Price	Build File	Options File
Western	Primary	Innovative Equipment Services 2 LLC CASE Power & Equipment of Florida	$115,298.00	Build	Options
Northern	Primary	Innovative Equipment Services 2 LLC CASE Power & Equipment of Florida	$115,298.00	Build	Options
Central	Primary	Innovative Equipment Services 2 LLC CASE Power & Equipment of Florida	$115,298.00	Build	Options
Southern	Primary	Innovative Equipment Services 2 LLC CASE Power & Equipment of Florida	$115,298.00	Build	Options

Bid Award

Contract: FSA26-EQU24.0, Equipment

Group: Loader: Wheel Loader - 1.5 cubic yd.

Item: 268, Caterpillar, 908, 908

Description: Refer FSA Base Specifications PDF document.

Model Upgrade/Downgrade:

Zone	Rank	Vendor	Price	Build File	Options File
Western	Primary	Ring Power Corporation	$128,308.00	Build	Options
Northern	Primary	Ring Power Corporation	$128,308.00	Build	Options
Central	Primary	Ring Power Corporation	$128,308.00	Build	Options
Southern	Primary	Kelly Tractor Co	$127,310.00	Build	Options

Bid Award

Contract: FSA26-EQU24.0, Equipment

Group: Loader: Wheel Loader - 1.5 cubic yd.

Item: 269, Hitachi, ZW120, ZW120

Description: Refer FSA Base Specifications PDF document.

Model Upgrade/Downgrade:

Zone	Rank	Vendor	Price	Build File	Options File
Western	Primary	GREAT SOUTHERN EQUIPMENT, LLC	$143,168.00	Build	Options
Northern	Primary	GREAT SOUTHERN EQUIPMENT, LLC	$143,168.00	Build	Options
Central	Primary	GREAT SOUTHERN EQUIPMENT, LLC	$143,168.00	Build	Options
Southern	Primary	GREAT SOUTHERN EQUIPMENT, LLC	$143,168.00	Build	Options

Bid Award

Contract: FSA26-EQU24.0, Equipment

Group: Loader: Wheel Loader - 1.5 cubic yd.

Item: 270, John Deere, 324P, 324P

Description: Refer FSA Base Specifications PDF document.

Model Upgrade/Downgrade:

Zone	Rank	Vendor	Price	Build File	Options File
Western	Primary	Dobbs Equipment, LLC	$137,805.00	Build	Options
	Alternate	Everglades Equipment Group	$137,850.00	Build	Options
Northern	Primary	Dobbs Equipment, LLC	$137,805.00	Build	Options
	Alternate	Everglades Equipment Group	$137,850.00	Build	Options
Central	Primary	Dobbs Equipment, LLC	$134,855.00	Build	Options
	Alternate	Everglades Equipment Group	$137,850.00	Build	Options
Southern	Primary	Dobbs Equipment, LLC	$134,855.00	Build	Options
	Alternate	Everglades Equipment Group	$137,850.00	Build	Options

Bid Award

Contract: FSA26-EQU24.0, Equipment

Group: Loader: Wheel Loader - 1.5 cubic yd.

Item: 275, Volvo, L45, L45

Description: Refer FSA Base Specifications PDF document.

Model Upgrade/Downgrade:

Zone	Rank	Vendor	Price	Build File	Options File
Western	Primary	Cowin Equipment Company	$145,992.00	Build	Options
Northern	Primary	Alta Construction Equipment Florida, LLC	$146,000.00	Build	Options
Central	Primary	Alta Construction Equipment Florida, LLC	$146,000.00	Build	Options
Southern	Primary	Alta Construction Equipment Florida, LLC	$146,000.00	Build	Options

Bid Award

Contract: FSA26-EQU24.0, Equipment

Group: Loader: Wheel Loader - 1.5 cubic yd.

Item: 276, Yanmar, V12, V12

Description: Refer FSA Base Specifications PDF document.

Model Upgrade/Downgrade:

Zone	Rank	Vendor	Price	Build File	Options File
Western	Primary	National Equipment Dealers, LLC	$140,750.00	Build	Options
Northern	Primary	National Equipment Dealers, LLC	$140,750.00	Build	Options
Central	Primary	National Equipment Dealers, LLC	$140,750.00	Build	Options
Southern	Primary	National Equipment Dealers, LLC	$140,750.00	Build	Options

Bid Award

Contract: FSA26-EQU24.0, Equipment

Group: Loader: Wheel Loader - 3.0 cubic yd.

Item: 277, Case, 621G, 621G

Description: Refer FSA Base Specifications PDF document.

Model Upgrade/Downgrade:

Zone	Rank	Vendor	Price	Build File	Options File
Western	Primary	Innovative Equipment Services 2 LLC CASE Power & Equipment of Florida	$252,935.00	Build	Options
Northern	Primary	Innovative Equipment Services 2 LLC CASE Power & Equipment of Florida	$252,935.00	Build	Options
Central	Primary	Innovative Equipment Services 2 LLC CASE Power & Equipment of Florida	$252,935.00	Build	Options
Southern	Primary	Innovative Equipment Services 2 LLC CASE Power & Equipment of Florida	$252,935.00	Build	Options

Bid Award

Contract: FSA26-EQU24.0, Equipment

Group: Loader: Wheel Loader - 3.0 cubic yd.

Item: 278, Caterpillar, 926, 926

Description: Refer FSA Base Specifications PDF document.

Model Upgrade/Downgrade:

Zone	Rank	Vendor	Price	Build File	Options File
Western	Primary	Ring Power Corporation	$209,354.00	Build	Options
Northern	Primary	Ring Power Corporation	$209,354.00	Build	Options
Central	Primary	Ring Power Corporation	$209,354.00	Build	Options
Southern	Primary	Kelly Tractor Co	$202,695.00	Build	Options

Bid Award

Contract: FSA26-EQU24.0, Equipment

Group: Loader: Wheel Loader - 3.0 cubic yd.

Item: 279, DEVELON, DL220-7, DL220-7

Description: Refer FSA Base Specifications PDF document.

Model Upgrade/Downgrade:

Zone	Rank	Vendor	Price	Build File	Options File
Western	Primary	HD CONSTRUCTION EQUIPMENT DEVELON NORTH AMERICA LLC	$144,962.00	Build	Options
Northern	Primary	HD CONSTRUCTION EQUIPMENT DEVELON NORTH AMERICA LLC	$144,962.00	Build	Options
Central	Primary	HD CONSTRUCTION EQUIPMENT DEVELON NORTH AMERICA LLC	$144,962.00	Build	Options
Southern	Primary	HD CONSTRUCTION EQUIPMENT DEVELON NORTH AMERICA LLC	$144,962.00	Build	Options

Bid Award

Contract: FSA26-EQU24.0, Equipment

Group: Loader: Wheel Loader - 3.0 cubic yd.

Item: 280, Hitachi, ZW180, ZW180

Description: Refer FSA Base Specifications PDF document.

Model Upgrade/Downgrade:

Zone	Rank	Vendor	Price	Build File	Options File
Western	Primary	GREAT SOUTHERN EQUIPMENT, LLC	$232,139.00	Build	Options
Northern	Primary	GREAT SOUTHERN EQUIPMENT, LLC	$232,139.00	Build	Options
Central	Primary	GREAT SOUTHERN EQUIPMENT, LLC	$232,139.00	Build	Options
Southern	Primary	GREAT SOUTHERN EQUIPMENT, LLC	$232,139.00	Build	Options

Bid Award

Contract: FSA26-EQU24.0, Equipment

Group: Loader: Wheel Loader - 3.0 cubic yd.

Item: 281, Hyundai, HL940A, HL940A

Description: Refer FSA Base Specifications PDF document.

Model Upgrade/Downgrade:

Zone	Rank	Vendor	Price	Build File	Options File
Western	Primary	National Equipment Dealers, LLC	$205,000.00	Build	Options
Northern	Primary	National Equipment Dealers, LLC	$205,000.00	Build	Options
Central	Primary	National Equipment Dealers, LLC	$205,000.00	Build	Options
Southern	Primary	National Equipment Dealers, LLC	$205,000.00	Build	Options

Bid Award

Contract: FSA26-EQU24.0, Equipment

Group: Loader: Wheel Loader - 3.0 cubic yd.

Item: 282, John Deere, 524P, 524P

Description: Refer FSA Base Specifications PDF document.

Model Upgrade/Downgrade:

Zone	Rank	Vendor	Price	Build File	Options File
Western	Primary	Dobbs Equipment, LLC	$220,475.00	Build	Options
Northern	Primary	Dobbs Equipment, LLC	$220,475.00	Build	Options
Central	Primary	Dobbs Equipment, LLC	$216,815.00	Build	Options
Southern	Primary	Dobbs Equipment, LLC	$216,815.00	Build	Options

Bid Award

Contract: FSA26-EQU24.0, Equipment

Group: Loader: Wheel Loader - 3.0 cubic yd.

Item: 285, Volvo, L60, L60

Description: Refer FSA Base Specifications PDF document.

Model Upgrade/Downgrade:

Zone	Rank	Vendor	Price	Build File	Options File
Western	Primary	Cowin Equipment Company	$182,289.00	Build	Options
Northern	Primary	Alta Construction Equipment Florida, LLC	$182,000.00	Build	Options
Central	Primary	Alta Construction Equipment Florida, LLC	$182,000.00	Build	Options
Southern	Primary	Alta Construction Equipment Florida, LLC	$182,000.00	Build	Options

Bid Award

Contract: FSA26-EQU24.0, Equipment

Group: Loader: Wheel Loader - 5.75 cubic yd.

Item: 287, Caterpillar, 972, 972

Description: Refer FSA Base Specifications PDF document.

Model Upgrade/Downgrade:

Zone	Rank	Vendor	Price	Build File	Options File
Western	Primary	Ring Power Corporation	$559,067.00	Build	Options
Northern	Primary	Ring Power Corporation	$559,067.00	Build	Options
Central	Primary	Ring Power Corporation	$559,067.00	Build	Options
Southern	Primary	Kelly Tractor Co	$489,930.00	Build	Options

Bid Award

Contract: FSA26-EQU24.0, Equipment

Group: Loader: Wheel Loader - 5.75 cubic yd.

Item: 288, DEVELON, DL480-7, DL480-7

Description: Refer FSA Base Specifications PDF document.

Model Upgrade/Downgrade:

Zone	Rank	Vendor	Price	Build File	Options File
Western	Primary	HD CONSTRUCTION EQUIPMENT DEVELON NORTH AMERICA LLC	$348,630.00	Build	Options
Northern	Primary	HD CONSTRUCTION EQUIPMENT DEVELON NORTH AMERICA LLC	$348,630.00	Build	Options
Central	Primary	HD CONSTRUCTION EQUIPMENT DEVELON NORTH AMERICA LLC	$348,630.00	Build	Options
Southern	Primary	HD CONSTRUCTION EQUIPMENT DEVELON NORTH AMERICA LLC	$348,630.00	Build	Options

Bid Award

Contract: FSA26-EQU24.0, Equipment

Group: Loader: Wheel Loader - 5.75 cubic yd.

Item: 289, Hitachi, ZW310, ZW310

Description: Refer FSA Base Specifications PDF document.

Model Upgrade/Downgrade:

Zone	Rank	Vendor	Price	Build File	Options File
Western	Primary	GREAT SOUTHERN EQUIPMENT, LLC	$434,143.00	Build	Options
Northern	Primary	GREAT SOUTHERN EQUIPMENT, LLC	$434,143.00	Build	Options
Central	Primary	GREAT SOUTHERN EQUIPMENT, LLC	$434,143.00	Build	Options
Southern	Primary	GREAT SOUTHERN EQUIPMENT, LLC	$434,143.00	Build	Options

Bid Award

Contract: FSA26-EQU24.0, Equipment

Group: Loader: Wheel Loader - 5.75 cubic yd.

Item: 290, Hyundai, HL975, HL975

Description: Refer FSA Base Specifications PDF document.

Model Upgrade/Downgrade:

Zone	Rank	Vendor	Price	Build File	Options File
Western	Primary	National Equipment Dealers, LLC	$388,786.00	Build	Options
Northern	Primary	National Equipment Dealers, LLC	$388,786.00	Build	Options
Central	Primary	National Equipment Dealers, LLC	$388,786.00	Build	Options
Southern	Primary	National Equipment Dealers, LLC	$388,786.00	Build	Options

Bid Award

Contract: FSA26-EQU24.0, Equipment

Group: Loader: Wheel Loader - 5.75 cubic yd.

Item: 291, John Deere, 744P, 744P

Description: Refer FSA Base Specifications PDF document.

Model Upgrade/Downgrade:

Zone	Rank	Vendor	Price	Build File	Options File
Western	Primary	Dobbs Equipment, LLC	$492,185.00	Build	Options
Northern	Primary	Dobbs Equipment, LLC	$492,185.00	Build	Options
Central	Primary	Dobbs Equipment, LLC	$481,515.00	Build	Options
Southern	Primary	Dobbs Equipment, LLC	$481,515.00	Build	Options

Bid Award

Contract: FSA26-EQU24.0, Equipment

Group: Loader: Wheel Loader - 5.75 cubic yd.

Item: 293, Volvo, L150, L150

Description: Refer FSA Base Specifications PDF document.

Model Upgrade/Downgrade:

Zone	Rank	Vendor	Price	Build File	Options File
Western	Primary	Cowin Equipment Company	$469,117.00	Build	Options
Northern	Primary	Alta Construction Equipment Florida, LLC	$471,000.00	Build	Options
Central	Primary	Alta Construction Equipment Florida, LLC	$471,000.00	Build	Options
Southern	Primary	Alta Construction Equipment Florida, LLC	$471,000.00	Build	Options

Bid Award

Contract: FSA26-EQU24.0, Equipment

Group: Low Speed Vehicle: Electric Type

Item: 295, GEM, e2, e2

Description: Refer FSA Base Specifications PDF document.

Model Upgrade/Downgrade:

Zone	Rank	Vendor	Price	Build File	Options File
Western	Primary	Love Power Equipment, Inc	$20,900.00	Build	Options
Northern	Primary	Love Power Equipment, Inc	$20,500.00	Build	Options
Central	Primary	Love Power Equipment, Inc	$20,500.00	Build	Options
Southern	Primary	Love Power Equipment, Inc	$20,900.00	Build	Options

Bid Award

Contract: FSA26-EQU24.0, Equipment

Group: Low Speed Vehicle: Electric Type

Item: 296, GEM, E4, E4

Description: Refer FSA Base Specifications PDF document.

Model Upgrade/Downgrade:

Zone	Rank	Vendor	Price	Build File	Options File
Western	Primary	Love Power Equipment, Inc	$22,800.00	Build	Options
Northern	Primary	Love Power Equipment, Inc	$22,500.00	Build	Options
Central	Primary	Love Power Equipment, Inc	$22,500.00	Build	Options
Southern	Primary	Love Power Equipment, Inc	$22,800.00	Build	Options

Bid Award

Contract: FSA26-EQU24.0, Equipment

Group: Low Speed Vehicle: Electric Type

Item: 297, ICON, ICON i40X, ICON i40X

Description: Refer FSA Base Specifications PDF document.

Model Upgrade/Downgrade:

Zone	Rank	Vendor	Price	Build File	Options File
Western	Primary	McKibben Powersports Inc.	$11,495.00	Build	Options
	Alternate	Love Power Equipment, Inc	$12,595.00	Build	Options
	Alternate	Federal Contracts LLC DBA Federal Contracts Company	$14,480.00	Build	Options
Northern	Primary	McKibben Powersports Inc.	$11,195.00	Build	Options
	Alternate	Love Power Equipment, Inc	$12,295.00	Build	Options
	Alternate	Federal Contracts LLC DBA Federal Contracts Company	$14,480.00	Build	Options
Central	Primary	McKibben Powersports Inc.	$10,795.00	Build	Options
	Alternate	Love Power Equipment, Inc	$12,295.00	Build	Options
	Alternate	Federal Contracts LLC DBA Federal Contracts Company	$14,480.00	Build	Options
Southern	Primary	McKibben Powersports Inc.	$11,095.00	Build	Options
	Alternate	Love Power Equipment, Inc	$12,595.00	Build	Options
	Alternate	Federal Contracts LLC DBA Federal Contracts Company	$14,480.00	Build	Options

Bid Award

Contract: FSA26-EQU24.0, Equipment

Group: Motor Grader: Large

Item: 300, Caterpillar, 120, 120

Description: Refer FSA Base Specifications PDF document.

Model Upgrade/Downgrade:

Zone	Rank	Vendor	Price	Build File	Options File
Western	Primary	Ring Power Corporation	$289,429.00	Build	Options
Northern	Primary	Ring Power Corporation	$289,429.00	Build	Options
Central	Primary	Ring Power Corporation	$289,429.00	Build	Options
Southern	Primary	Kelly Tractor Co	$268,250.00	Build	Options

Bid Award

Contract: FSA26-EQU24.0, Equipment

Group: Motor Grader: Large

Item: 301, John Deere, 620G, 620G

Description: Refer FSA Base Specifications PDF document.

Model Upgrade/Downgrade:

Zone	Rank	Vendor	Price	Build File	Options File
Western	Primary	Dobbs Equipment, LLC	$273,625.00	Build	Options
Northern	Primary	Dobbs Equipment, LLC	$273,625.00	Build	Options
Central	Primary	Dobbs Equipment, LLC	$267,615.00	Build	Options
Southern	Primary	Dobbs Equipment, LLC	$267,615.00	Build	Options

Bid Award

Contract: FSA26-EQU24.0, Equipment

Group: Motor Grader: Small

Item: 304, LeeBoy, 685D, 685D

Description: Refer FSA Base Specifications PDF document.

Model Upgrade/Downgrade:

Zone	Rank	Vendor	Price	Build File	Options File
Western	Primary	Dobbs Equipment, LLC	$275,525.00	Build	Options
Northern	Primary	Dobbs Equipment, LLC	$275,525.00	Build	Options
Central	Primary	Dobbs Equipment, LLC	$275,525.00	Build	Options
Southern	Primary	Dobbs Equipment, LLC	$275,525.00	Build	Options

Bid Award

Contract: FSA26-EQU24.0, Equipment

Group: Motor Grader: Small

Item: 306, Weiler, G65, G65

Description: Refer FSA Base Specifications PDF document.

Model Upgrade/Downgrade:

Zone	Rank	Vendor	Price	Build File	Options File
Western	Primary	Ring Power Corporation	$229,915.00	Build	Options
Northern	Primary	Ring Power Corporation	$229,915.00	Build	Options
Central	Primary	Ring Power Corporation	$229,915.00	Build	Options
Southern	Primary	Kelly Tractor Co	$220,650.00	Build	Options

Bid Award

Contract: FSA26-EQU24.0, Equipment

Group: Mower: 15ft. Flex Wing Rotary Mower

Item: 307, Bush Hog, 4115, 4115

Description: Refer FSA Base Specifications PDF document.

Model Upgrade/Downgrade:

Zone	Rank	Vendor	Price	Build File	Options File
Western	Primary	Alamo Group Ag Americas LLC	$35,702.00	Build	Options
Northern	Primary	Alamo Group Ag Americas LLC	$35,702.00	Build	Options
Central	Primary	Alamo Group Ag Americas LLC	$35,702.00	Build	Options
Southern	Primary	Alamo Group Ag Americas LLC	$35,702.00	Build	Options

Bid Award

Contract: FSA26-EQU24.0, Equipment

Group: Mower: 15ft. Flex Wing Rotary Mower

Item: 308, Bush-Whacker, ST-180, ST-180

Description: Refer FSA Base Specifications PDF document.

Model Upgrade/Downgrade:

Zone	Rank	Vendor	Price	Build File	Options File
Western	Primary	OCALA TRACTOR, LCC	$26,900.00	Build	Options
Northern	Primary	OCALA TRACTOR, LCC	$26,500.00	Build	Options
Central	Primary	OCALA TRACTOR, LCC	$26,500.00	Build	Options
Southern	Primary	OCALA TRACTOR, LCC	$27,300.00	Build	Options

Bid Award

Contract: FSA26-EQU24.0, Equipment

Group: Mower: 15ft. Flex Wing Rotary Mower

Item: 309, John Deere, FC15M, FC15M

Description: Refer FSA Base Specifications PDF document.

Model Upgrade/Downgrade:

Zone	Rank	Vendor	Price	Build File	Options File
Western	Primary	Everglades Equipment Group	$28,250.00	Build	Options
Northern	Primary	Everglades Equipment Group	$28,250.00	Build	Options
Central	Primary	Everglades Equipment Group	$28,250.00	Build	Options
Southern	Primary	Everglades Equipment Group	$28,250.00	Build	Options

Bid Award

Contract: FSA26-EQU24.0, Equipment

Group: Mower: 15ft. Flex Wing Rotary Mower

Item: 310, Land Pride, RC4715, RC4715

Description: Refer FSA Base Specifications PDF document.

Model Upgrade/Downgrade:

Zone	Rank	Vendor	Price	Build File	Options File
Western	Primary	Creel Tractor Company	$25,480.00	Build	Options
Northern	Primary	Creel Tractor Company	$25,280.00	Build	Options
Central	Primary	Creel Tractor Company	$24,980.00	Build	Options
Southern	Primary	Creel Tractor Company	$24,380.00	Build	Options

Bid Award

Contract: FSA26-EQU24.0, Equipment

Group: Mower: 15ft. Flex Wing Rotary Mower

Item: 311, RhinoAg, 4150, 4150

Description: Refer FSA Base Specifications PDF document.

Model Upgrade/Downgrade:

Zone	Rank	Vendor	Price	Build File	Options File
Western	Primary	Alamo Group Ag Americas LLC	$34,419.00	Build	Options
Northern	Primary	Alamo Group Ag Americas LLC	$34,419.00	Build	Options
Central	Primary	Alamo Group Ag Americas LLC	$34,419.00	Build	Options
Southern	Primary	Alamo Group Ag Americas LLC	$34,419.00	Build	Options

Bid Award

Contract: FSA26-EQU24.0, Equipment

Group: Mower: 15ft. Flex Wing Rotary Mower

Item: 312, Schulte, FX-1800, FX-1800

Description: Refer FSA Base Specifications PDF document.

Model Upgrade/Downgrade:

Zone	Rank	Vendor	Price	Build File	Options File
Western					
Northern					
Central	Primary	Kelly Tractor Co	$41,000.00	Build	Options
Southern	Primary	Kelly Tractor Co	$41,000.00	Build	Options

Bid Award

Contract: FSA26-EQU24.0, Equipment

Group: Mower: 15ft. Flex Wing Rotary Mower

Item: 313, Woods, BW15.52, BW15.52

Description: Refer FSA Base Specifications PDF document.

Model Upgrade/Downgrade:

Zone	Rank	Vendor	Price	Build File	Options File
Western	Primary	OCALA TRACTOR, LCC	$20,800.00	Build	Options
	Alternate	Everglades Equipment Group	$21,950.00	Build	Options
Northern	Primary	OCALA TRACTOR, LCC	$20,400.00	Build	Options
	Alternate	Everglades Equipment Group	$21,950.00	Build	Options
Central	Primary	OCALA TRACTOR, LCC	$20,400.00	Build	Options
	Alternate	Everglades Equipment Group	$21,950.00	Build	Options
	Alternate	Kelly Tractor Co	$25,770.00	Build	Options
Southern	Primary	OCALA TRACTOR, LCC	$20,400.00	Build	Options
	Alternate	Everglades Equipment Group	$21,950.00	Build	Options
	Alternate	Kelly Tractor Co	$25,770.00	Build	Options

Bid Award

Contract: FSA26-EQU24.0, Equipment

Group: Mower: Remote Controlled Brush Mower

Item: 316, AGRIA, 9600-112, 9600-112

Description: Refer FSA Base Specifications PDF document.

Model Upgrade/Downgrade:

Zone	Rank	Vendor	Price	Build File	Options File
Western	Primary	Pat`s Pump & Blower	$56,500.00	Build	Options
Northern	Primary	Pat`s Pump & Blower	$56,500.00	Build	Options
Central	Primary	Pat`s Pump & Blower	$56,500.00	Build	Options
Southern	Primary	Pat`s Pump & Blower	$56,500.00	Build	Options

Bid Award

Contract: FSA26-EQU24.0, Equipment

Group: Mower: Remote Controlled Brush Mower

Item: 317, Alamo Industrial, RC28, RC28

Description: Refer FSA Base Specifications PDF document.

Model Upgrade/Downgrade:

Zone	Rank	Vendor	Price	Build File	Options File
Western	Primary	Alamo Group Municipal Mowing Solutions LLC	$60,379.00	Build	Options
Northern	Primary	Alamo Group Municipal Mowing Solutions LLC	$60,379.00	Build	Options
Central	Primary	Alamo Group Municipal Mowing Solutions LLC	$60,379.00	Build	Options
Southern	Primary	Alamo Group Municipal Mowing Solutions LLC	$60,379.00	Build	Options

Bid Award

Contract: FSA26-EQU24.0, Equipment

Group: Mower: Remote Controlled Brush Mower

Item: 319, RC Mowers, R-52, R-52

Description: Refer FSA Base Specifications PDF document.

Model Upgrade/Downgrade:

Zone	Rank	Vendor	Price	Build File	Options File
Western	Primary	Jet-Vac Equipment Company, LLC	$70,394.00	Build	Options
Northern	Primary	Jet-Vac Equipment Company, LLC	$70,394.00	Build	Options
Central	Primary	Jet-Vac Equipment Company, LLC	$70,394.00	Build	Options
Southern	Primary	Jet-Vac Equipment Company, LLC	$70,394.00	Build	Options

Bid Award

Contract: FSA26-EQU24.0, Equipment

Group: Mower: Remote Controlled Brush Mower

Item: 320, Scag, RC Extreme Slope Mower, SRC-52D-37BV-EFI

Description: Refer FSA Base Specifications PDF document.

Model Upgrade/Downgrade:

Zone	Rank	Vendor	Price	Build File	Options File
Western					
Northern					
Central					
Southern	Primary	Green Thumb Palm Beach	$53,178.00	Build	Options

Bid Award

Contract: FSA26-EQU24.0, Equipment

Group: Mower: Zero Turn Radius Mower

Item: 321, Bad Boy, Maverick HD, BMH60FX730

Description: Refer FSA Base Specifications PDF document.

Model Upgrade/Downgrade:

Zone	Rank	Vendor	Price	Build File	Options File
Western	Primary	Love Power Equipment, Inc	$10,100.00	Build	Options
Northern	Primary	Love Power Equipment, Inc	$10,000.00	Build	Options
Central	Primary	Love Power Equipment, Inc	$9,900.00	Build	Options
Southern	Primary	Love Power Equipment, Inc	$10,100.00	Build	Options

Bid Award

Contract: FSA26-EQU24.0, Equipment

Group: Mower: Zero Turn Radius Mower

Item: 322, Bad Boy, Rebel SD, BRB61ZT740

Description: Refer FSA Base Specifications PDF document.

Model Upgrade/Downgrade:

Zone	Rank	Vendor	Price	Build File	Options File
Western	Primary Alternate	OCALA TRACTOR, LCC Love Power Equipment, Inc	$7,150.00 $11,164.00	Build Build	Options Options
Northern	Primary Alternate	OCALA TRACTOR, LCC Love Power Equipment, Inc	$6,950.00 $9,864.00	Build Build	Options Options
Central	Primary Alternate	OCALA TRACTOR, LCC Love Power Equipment, Inc	$6,950.00 $9,864.00	Build Build	Options Options
Southern	Primary Alternate	OCALA TRACTOR, LCC Love Power Equipment, Inc	$7,350.00 $11,164.00	Build Build	Options Options

Bid Award

Contract: FSA26-EQU24.0, Equipment

Group: Mower: Zero Turn Radius Mower

Item: 323, Bobcat, ZT6100, ZT6100

Description: Refer FSA Base Specifications PDF document.

Model Upgrade/Downgrade:

Zone	Rank	Vendor	Price	Build File	Options File
Western	Primary	Doosan Bobcat North America, Inc.	$11,866.00	Build	Options
Northern	Primary	Doosan Bobcat North America, Inc.	$11,866.00	Build	Options
Central	Primary	Doosan Bobcat North America, Inc.	$11,866.00	Build	Options
Southern	Primary	Doosan Bobcat North America, Inc.	$11,866.00	Build	Options

Bid Award

Contract: FSA26-EQU24.0, Equipment

Group: Mower: Zero Turn Radius Mower

Item: 324, Dixie Chopper, Eagle, 2760KW

Description: Refer FSA Base Specifications PDF document.

Model Upgrade/Downgrade:

Zone	Rank	Vendor	Price	Build File	Options File
Western	Primary	Alamo Group Ag Americas LLC	$15,680.00	Build	Options
Northern	Primary	Alamo Group Ag Americas LLC	$15,680.00	Build	Options
Central	Primary	Alamo Group Ag Americas LLC	$15,680.00	Build	Options
Southern	Primary	Alamo Group Ag Americas LLC	$15,680.00	Build	Options

Bid Award

Contract: FSA26-EQU24.0, Equipment

Group: Mower: Zero Turn Radius Mower

Item: 328, Exmark, Lazer Z S-Series, LRS801GKA604A1

Description: Refer FSA Base Specifications PDF document.

Model Upgrade/Downgrade:

Zone	Rank	Vendor	Price	Build File	Options File
Western	Primary	Green Thumb Palm Beach	$11,359.00	Build	Options
Northern	Primary	Green Thumb Palm Beach	$11,359.00	Build	Options
Central	Primary	Green Thumb Palm Beach	$11,359.00	Build	Options
Southern	Primary	Green Thumb Palm Beach	$11,359.00	Build	Options

Bid Award

Contract: FSA26-EQU24.0, Equipment

Group: Mower: Zero Turn Radius Mower

Item: 329, Ferris, ISX2200, 5902078

Description: Refer FSA Base Specifications PDF document.

Model Upgrade/Downgrade:

Zone	Rank	Vendor	Price	Build File	Options File
Western	Primary	Green Thumb Palm Beach	$15,899.00	Build	Options
Northern	Primary	Green Thumb Palm Beach	$14,899.00	Build	Options
Central	Primary	Green Thumb Palm Beach	$14,749.00	Build	Options
Southern	Primary	Green Thumb Palm Beach	$14,624.00	Build	Options

Bid Award

Contract: FSA26-EQU24.0, Equipment

Group: Mower: Zero Turn Radius Mower

Item: 330, Grasshopper, 225, 225

Description: Refer FSA Base Specifications PDF document.

Model Upgrade/Downgrade:

Zone	Rank	Vendor	Price	Build File	Options File
Western	Primary	Federal Contracts LLC DBA Federal Contracts Company	$15,480.00	Build	Options
Northern	Primary	Federal Contracts LLC DBA Federal Contracts Company	$15,480.00	Build	Options
Central	Primary	Federal Contracts LLC DBA Federal Contracts Company	$15,480.00	Build	Options
Southern	Primary	Federal Contracts LLC DBA Federal Contracts Company	$15,480.00	Build	Options

Bid Award

Contract: FSA26-EQU24.0, Equipment

Group: Mower: Zero Turn Radius Mower

Item: 331, Gravely, Proturn 260, 992551

Description: Refer FSA Base Specifications PDF document.

Model Upgrade/Downgrade:

Zone	Rank	Vendor	Price	Build File	Options File
Western	Primary	OCALA TRACTOR, LCC	$10,500.00	Build	Options
	Alternate	ARIENS COMPANY	$11,101.00	Build	Options
Northern	Primary	OCALA TRACTOR, LCC	$10,200.00	Build	Options
	Alternate	ARIENS COMPANY	$11,101.00	Build	Options
Central	Primary	OCALA TRACTOR, LCC	$10,200.00	Build	Options
	Alternate	ARIENS COMPANY	$11,101.00	Build	Options
Southern	Primary	OCALA TRACTOR, LCC	$10,500.00	Build	Options
	Alternate	ARIENS COMPANY	$11,101.00	Build	Options

Bid Award

Contract: FSA26-EQU24.0, Equipment

Group: Mower: Zero Turn Radius Mower

Item: 332, Husqvarna, Z560, Z560

Description: Refer FSA Base Specifications PDF document.

Model Upgrade/Downgrade:

Zone	Rank	Vendor	Price	Build File	Options File
Western	Primary	Love Power Equipment, Inc	$13,259.00	Build	Options
	Alternate	Federal Contracts LLC DBA Federal Contracts Company	$14,665.00	Build	Options
Northern	Primary	Love Power Equipment, Inc	$12,959.00	Build	Options
	Alternate	Federal Contracts LLC DBA Federal Contracts Company	$14,665.00	Build	Options
Central	Primary	Love Power Equipment, Inc	$12,959.00	Build	Options
	Alternate	Federal Contracts LLC DBA Federal Contracts Company	$14,665.00	Build	Options
Southern	Primary	Love Power Equipment, Inc	$13,259.00	Build	Options
	Alternate	Federal Contracts LLC DBA Federal Contracts Company	$14,665.00	Build	Options

Bid Award

Contract: FSA26-EQU24.0, Equipment

Group: Mower: Zero Turn Radius Mower

Item: 333, Hustler, X-One, 943795

Description: Refer FSA Base Specifications PDF document.

Model Upgrade/Downgrade:

Zone	Rank	Vendor	Price	Build File	Options File
Western	Primary	Green Thumb Palm Beach	$15,021.00	Build	Options
Northern	Primary	Green Thumb Palm Beach	$13,421.00	Build	Options
Central	Primary	Green Thumb Palm Beach	$13,026.00	Build	Options
Southern	Primary	Green Thumb Palm Beach	$12,631.00	Build	Options

Bid Award

Contract: FSA26-EQU24.0, Equipment

Group: Mower: Zero Turn Radius Mower

Item: 335, Kubota, Z725KHNC-60, Z725KHNC-60

Description: Refer FSA Base Specifications PDF document.

Model Upgrade/Downgrade:

Zone	Rank	Vendor	Price	Build File	Options File
Western	Primary	Creel Tractor Company	$10,990.00	Build	Options
Northern	Primary Alternate	Florida Coast Equipment, Inc. Creel Tractor Company	$10,622.00 $10,790.00	Build Build	Options Options
Central	Primary Alternate	Creel Tractor Company Florida Coast Equipment, Inc.	$10,490.00 $10,622.00	Build Build	Options Options
Southern	Primary Alternate	Creel Tractor Company Florida Coast Equipment, Inc.	$10,290.00 $10,622.00	Build Build	Options Options

Bid Award

Contract: FSA26-EQU24.0, Equipment

Group: Mower: Zero Turn Radius Mower

Item: 337, Scag, Tiger Cat II, STCII61V-26FTEFI

Description: Refer FSA Base Specifications PDF document.

Model Upgrade/Downgrade:

Zone	Rank	Vendor	Price	Build File	Options File
Western	Primary	Green Thumb Palm Beach	$10,748.00	Build	Options
Northern	Primary	Green Thumb Palm Beach	$10,748.00	Build	Options
Central	Primary	Green Thumb Palm Beach	$10,748.00	Build	Options
Southern	Primary	Green Thumb Palm Beach	$10,748.00	Build	Options

Bid Award

Contract: FSA26-EQU24.0, Equipment

Group: Mower: Zero Turn Radius Mower

Item: 339, Wright, ZXL, WZXL61S61E8E1B

Description: Refer FSA Base Specifications PDF document.

Model Upgrade/Downgrade:

Zone	Rank	Vendor	Price	Build File	Options File
Western	Primary	Green Thumb Palm Beach	$13,980.00	Build	Options
Northern	Primary	Green Thumb Palm Beach	$12,380.00	Build	Options
Central	Primary	Green Thumb Palm Beach	$12,380.00	Build	Options
Southern	Primary	Green Thumb Palm Beach	$12,380.00	Build	Options

Bid Award

Contract: FSA26-EQU24.0, Equipment

Group: Pallet Jack: Electric 4,500 lbs. Capacity

Item: 341, Clark, WPX45, WPX45

Description: Refer FSA Base Specifications PDF document.

Model Upgrade/Downgrade:

Zone	Rank	Vendor	Price	Build File	Options File
Western	Primary	National Lift Truck Service	$6,928.00	Build	Options
Northern	Primary	National Lift Truck Service	$6,928.00	Build	Options
Central	Primary	National Lift Truck Service	$6,928.00	Build	Options
Southern	Primary	National Lift Truck Service	$6,873.00	Build	Options

Bid Award

Contract: FSA26-EQU24.0, Equipment

Group: Pallet Jack: Electric 4,500 lbs. Capacity

Item: 343, Hangcha, WP22Li, CBD22-AC1-NAI

Description: Refer FSA Base Specifications PDF document.

Model Upgrade/Downgrade:

Zone	Rank	Vendor	Price	Build File	Options File
Western	Primary	National Lift Truck Service	$6,252.00	Build	Options
Northern	Primary	National Lift Truck Service	$6,252.00	Build	Options
Central	Primary	National Lift Truck Service	$6,252.00	Build	Options
Southern	Primary	National Lift Truck Service	$6,252.00	Build	Options

Bid Award

Contract: FSA26-EQU24.0, Equipment

Group: Pallet Jack: Electric 4,500 lbs. Capacity

Item: 345, Jungheinrich, EJE120, EJE120

Description: Refer FSA Base Specifications PDF document.

Model Upgrade/Downgrade:

Zone	Rank	Vendor	Price	Build File	Options File
Western					
Northern					
Central					
Southern	Primary	Kelly Tractor Co	$9,900.00	Build	Options

Bid Award

Contract: FSA26-EQU24.0, Equipment

Group: Pallet Jack: Electric 4,500 lbs. Capacity

Item: 346, Mitsubishi, PW23, PW23

Description: Refer FSA Base Specifications PDF document.

Model Upgrade/Downgrade:

Zone	Rank	Vendor	Price	Build File	Options File
Western					
Northern					
Central					
Southern	Primary	Kelly Tractor Co	$9,900.00	Build	Options

Bid Award

Contract: FSA26-EQU24.0, Equipment

Group: Pipe Inspection: Battery Operated Pipe Crawler Inspection System

Item: 349, Pipe Trekker, A-200 Pipe Crawler, A-200

Description: Refer FSA Base Specifications PDF document.

Model Upgrade/Downgrade:

Zone	Rank	Vendor	Price	Build File	Options File
Western	Primary	Pat`s Pump & Blower	$85,000.00	Build	Options
Northern	Primary	Pat`s Pump & Blower	$85,000.00	Build	Options
Central	Primary	Pat`s Pump & Blower	$85,000.00	Build	Options
Southern	Primary	Pat`s Pump & Blower	$85,000.00	Build	Options

Bid Award

Contract: FSA26-EQU24.0, Equipment

Group: Pipe Inspection: External Power Pipe Crawler Inspection System

Item: 350, RapidView, Mainline HD, Mainline HD

Description: Refer FSA Base Specifications PDF document.

Model Upgrade/Downgrade:

Zone	Rank	Vendor	Price	Build File	Options File
Western	Primary	Jet-Vac Equipment Company, LLC	$184,282.00	Build	Options
Northern	Primary	Jet-Vac Equipment Company, LLC	$184,282.00	Build	Options
Central	Primary	Jet-Vac Equipment Company, LLC	$184,282.00	Build	Options
Southern	Primary	Jet-Vac Equipment Company, LLC	$184,282.00	Build	Options

Bid Award

Contract: FSA26-EQU24.0, Equipment

Group: Pipe Inspection: External Power Pipe Crawler Inspection System

Item: 351, Aries Industries, Voyager, TR400

Description: Refer FSA Base Specifications PDF document.

Model Upgrade/Downgrade:

Zone	Rank	Vendor	Price	Build File	Options File
Western	Primary	Evervac Equipment	$135,731.00	Build	Options
Northern	Primary	Evervac Equipment	$135,731.00	Build	Options
Central	Primary	Evervac Equipment	$135,731.00	Build	Options
Southern	Primary	Evervac Equipment	$135,731.00	Build	Options

Bid Award

Contract: FSA26-EQU24.0, Equipment

Group: Pipe Inspection: External Power Pipe Crawler Inspection System

Item: 657, Envirosight, Rovver X, Rovver X

Description: Refer FSA Base Specifications PDF document.

Model Upgrade/Downgrade:

Zone	Rank	Vendor	Price	Build File	Options File
Western	Primary	Environmental Products Group	$110,037.00	Build	Options
Northern	Primary	Environmental Products Group	$110,037.00	Build	Options
Central	Primary	Environmental Products Group	$110,037.00	Build	Options
Southern	Primary	Environmental Products Group	$110,037.00	Build	Options

Bid Award

Contract: FSA26-EQU24.0, Equipment

Group: Pipe Inspection: External Power Pipe Crawler Inspection System

Item: 658, Minicam, ACR HD, ACR HD

Description: Refer FSA Base Specifications PDF document.

Model Upgrade/Downgrade:

Zone	Rank	Vendor	Price	Build File	Options File
Western	Primary	Southern Sewer Equipment Sales	$112,737.00	Build	Options
Northern	Primary	Southern Sewer Equipment Sales	$112,737.00	Build	Options
Central	Primary	Southern Sewer Equipment Sales	$112,737.00	Build	Options
Southern	Primary	Southern Sewer Equipment Sales	$112,737.00	Build	Options

Bid Award

Contract: FSA26-EQU24.0, Equipment

Group: Portable Signal: Portable Signal - Trailer Mounted

Item: 352, OMJC Signal, Light Duty Portable Traffic Signal, LDPTS-S

Description: Refer FSA Base Specifications PDF document.

Model Upgrade/Downgrade:

Zone	Rank	Vendor	Price	Build File	Options File
Western	Primary	OMJC Signal Inc	$24,521.00	Build	Options
Northern	Primary	OMJC Signal Inc	$24,521.00	Build	Options
Central	Primary	OMJC Signal Inc	$24,521.00	Build	Options
Southern	Primary	OMJC Signal Inc	$24,521.00	Build	Options

Bid Award

Contract: FSA26-EQU24.0, Equipment

Group: Portable Signal: Portable Signal - Trailer Mounted

Item: 659, Ver-Mac, TLD-3612-G3, TLD-3612-G3

Description: Refer FSA Base Specifications PDF document.

Model Upgrade/Downgrade:

Zone	Rank	Vendor	Price	Build File	Options File
Western	Primary	Federal Contracts LLC DBA Federal Contracts Company	$38,973.00	Build	Options
Northern	Primary	Federal Contracts LLC DBA Federal Contracts Company	$38,973.00	Build	Options
Central	Primary	Federal Contracts LLC DBA Federal Contracts Company	$38,973.00	Build	Options
Southern	Primary	Federal Contracts LLC DBA Federal Contracts Company	$38,973.00	Build	Options

Bid Award

Contract: FSA26-EQU24.0, Equipment

Group: Pump: Mobile Pump

Item: 353, Atlas Copco, PAS F66 KD, PAS F66 KD

Description: Refer FSA Base Specifications PDF document.

Model Upgrade/Downgrade:

Zone	Rank	Vendor	Price	Build File	Options File
Western					
Northern					
Central					
Southern	Primary	Kelly Tractor Co	$59,990.00	Build	Options

Bid Award

Contract: FSA26-EQU24.0, Equipment

Group: Pump: Mobile Pump

Item: 354, BBA Pumps, BA150E, BA150E

Description: Refer FSA Base Specifications PDF document.

Model Upgrade/Downgrade:

Zone	Rank	Vendor	Price	Build File	Options File
Western	Primary	BBA Pumps, Inc.	$59,562.00	Build	Options
Northern	Primary	BBA Pumps, Inc.	$59,562.00	Build	Options
Central	Primary	BBA Pumps, Inc.	$59,562.00	Build	Options
Southern	Primary	BBA Pumps, Inc.	$59,562.00	Build	Options

Bid Award

Contract: FSA26-EQU24.0, Equipment

Group: Pump: Mobile Pump

Item: 356, Global Pump, 6GSTAP, 6GSTAP

Description: Refer FSA Base Specifications PDF document.

Model Upgrade/Downgrade:

Zone	Rank	Vendor	Price	Build File	Options File
Western	Primary	Mersino Dewatering LLC	$59,800.00	Build	
Northern	Primary	Mersino Dewatering LLC	$59,800.00	Build	
Central	Primary	Mersino Dewatering LLC	$59,800.00	Build	
Southern	Primary	Mersino Dewatering LLC	$59,800.00	Build	

Bid Award

Contract: FSA26-EQU24.0, Equipment

Group: Pump: Mobile Pump

Item: 357, Godwin, CD 150S, CD 150S

Description: Refer FSA Base Specifications PDF document.

Model Upgrade/Downgrade:

Zone	Rank	Vendor	Price	Build File	Options File
Western	Primary	Xylem Dewatering Solutions, Inc.	$55,716.00	Build	Options
Northern	Primary	Xylem Dewatering Solutions, Inc.	$55,716.00	Build	Options
Central	Primary	Xylem Dewatering Solutions, Inc.	$55,716.00	Build	Options
Southern	Primary	Xylem Dewatering Solutions, Inc.	$55,716.00	Build	Options

Bid Award

Contract: FSA26-EQU24.0, Equipment

Group: Pump: Mobile Pump

Item: 359, MWI, CT006, CT006

Description: Refer FSA Base Specifications PDF document.

Model Upgrade/Downgrade:

Zone	Rank	Vendor	Price	Build File	Options File
Western	Primary	MWI Corporation	$54,345.00	Build	Options
Northern	Primary	MWI Corporation	$54,345.00	Build	Options
Central	Primary	MWI Corporation	$54,345.00	Build	Options
Southern	Primary	MWI Corporation	$54,345.00	Build	Options

Bid Award

Contract: FSA26-EQU24.0, Equipment

Group: Pump: Mobile Pump

Item: 360, Opifex-Synergy, Pump Centrif-Trash 6" AP-ST-OP-D-T, Pump Centrif-Trash 6" AP-ST-OP-D-T

Description: Refer FSA Base Specifications PDF document.

Model Upgrade/Downgrade:

Zone	Rank	Vendor	Price	Build File	Options File
Western	Primary	Opifex-Synergy	$69,572.00	Build	Options
Northern	Primary	Opifex-Synergy	$69,572.00	Build	Options
Central	Primary	Opifex-Synergy	$69,572.00	Build	Options
Southern	Primary	Opifex-Synergy	$69,572.00	Build	Options

Bid Award

Contract: FSA26-EQU24.0, Equipment

Group: Pump: Mobile Pump

Item: 361, Pioneer, PP66S12L71, PP66S12L71

Description: Refer FSA Base Specifications PDF document.

Model Upgrade/Downgrade:

Zone	Rank	Vendor	Price	Build File	Options File
Western	Primary	Tom Evans Environmental, Inc.	$70,070.00	Build	Options
Northern	Primary	Tom Evans Environmental, Inc.	$69,070.00	Build	Options
Central	Primary	Tom Evans Environmental, Inc.	$69,070.00	Build	Options
Southern	Primary	Tom Evans Environmental, Inc.	$69,070.00	Build	Options

Bid Award

Contract: FSA26-EQU24.0, Equipment

Group: Pump: Mobile Pump

Item: 363, Thompson Pump, 6JSC, 6JSC

Description: Refer FSA Base Specifications PDF document.

Model Upgrade/Downgrade:

Zone	Rank	Vendor	Price	Build File	Options File
Western	Primary	Thompson Pump & Manufacturing Company Inc.	$49,892.00	Build	Options
Northern	Primary	Thompson Pump & Manufacturing Company Inc.	$49,892.00	Build	Options
Central	Primary	Thompson Pump & Manufacturing Company Inc.	$49,892.00	Build	Options
Southern	Primary	Thompson Pump & Manufacturing Company Inc.	$49,892.00	Build	Options

Bid Award

Contract: FSA26-EQU24.0, Equipment

Group: Pump: Mobile Pump

Item: 364, Tradewinds, T66P, T66P

Description: Refer FSA Base Specifications PDF document.

Model Upgrade/Downgrade:

Zone	Rank	Vendor	Price	Build File	Options File
Western	Primary	Tradewinds Power Corp.	$57,000.00	Build	Options
Northern	Primary	Tradewinds Power Corp.	$57,000.00	Build	Options
Central	Primary	Tradewinds Power Corp.	$57,000.00	Build	Options
Southern	Primary	Tradewinds Power Corp.	$57,000.00	Build	Options

Bid Award

Contract: FSA26-EQU24.0, Equipment

Group: Roadway Advisory Board: Message Board/Automatic License Plate Reader

Item: 365, Vetted Security Solutions, Vetted XL Message Board Trailer, VH-MSG-XL

Description: Refer FSA Base Specifications PDF document.

Model Upgrade/Downgrade:

Zone	Rank	Vendor	Price	Build File	Options File
Western	Primary	Vetted Security Solutions	$67,393.00	Build	Options
Northern	Primary	Vetted Security Solutions	$67,393.00	Build	Options
Central	Primary	Vetted Security Solutions	$67,393.00	Build	Options
Southern	Primary	Vetted Security Solutions	$67,393.00	Build	Options

Bid Award

Contract: FSA26-EQU24.0, Equipment

Group: Roadway Advisory Board: Mobile Message Board

Item: 366, American Signal Company, CMS-GP465T, CMS-GP465T

Description: Refer FSA Base Specifications PDF document.

Model Upgrade/Downgrade:

Zone	Rank	Vendor	Price	Build File	Options File
Western	Primary	American Signal Company	$15,998.00	Build	Options
Northern	Primary	American Signal Company	$15,998.00	Build	Options
Central	Primary	American Signal Company	$16,200.00	Build	Options
Southern	Primary	American Signal Company	$16,352.00	Build	Options

Bid Award

Contract: FSA26-EQU24.0, Equipment

Group: Roadway Advisory Board: Mobile Message Board

Item: 367, K&K Systems, MB9757, MB9757

Description: Refer FSA Base Specifications PDF document.

Model Upgrade/Downgrade:

Zone	Rank	Vendor	Price	Build File	Options File
Western	Primary	K&K Systems, Inc.	$14,997.00	Build	Options
Northern	Primary	K&K Systems, Inc.	$14,997.00	Build	Options
Central	Primary	K&K Systems, Inc.	$14,997.00	Build	Options
Southern	Primary	K&K Systems, Inc.	$14,997.00	Build	Options

Bid Award

Contract: FSA26-EQU24.0, Equipment

Group: Roadway Advisory Board: Mobile Message Board

Item: 368, Kustom Signal, Smart VMS, 2

Description: Refer FSA Base Specifications PDF document.

Model Upgrade/Downgrade:

Zone	Rank	Vendor	Price	Build File	Options File
Western	Primary	Kustom Signals, Inc.	$21,199.00	Build	Options
Northern	Primary	Kustom Signals, Inc.	$21,199.00	Build	Options
Central	Primary	Kustom Signals, Inc.	$21,199.00	Build	Options
Southern	Primary	Kustom Signals, Inc.	$21,199.00	Build	Options

Bid Award

Contract: FSA26-EQU24.0, Equipment

Group: Roadway Advisory Board: Mobile Message Board

Item: 369, Ver-Mac, PCMS-1500, PCMS-1500

Description: Refer FSA Base Specifications PDF document.

Model Upgrade/Downgrade:

Zone	Rank	Vendor	Price	Build File	Options File
Western	Primary	Federal Contracts LLC DBA Federal Contracts Company	$21,205.00	Build	Options
Northern	Primary	Federal Contracts LLC DBA Federal Contracts Company	$21,205.00	Build	Options
Central	Primary	Federal Contracts LLC DBA Federal Contracts Company	$21,205.00	Build	Options
Southern	Primary	Federal Contracts LLC DBA Federal Contracts Company	$21,205.00	Build	Options

Bid Award

Contract: FSA26-EQU24.0, Equipment

Group: Roadway Advisory Board: Mobile Message Board

Item: 370, Wanco, Full Size 3-Line Message Board Trailer, WTLMB-A

Description: Refer FSA Base Specifications PDF document.

Model Upgrade/Downgrade:

Zone	Rank	Vendor	Price	Build File	Options File
Western	Primary	Aramsco Inc	$20,750.00	Build	Options
	Alternate	Vetted Security Solutions	$20,900.00	Build	Options
	Alternate	Croc Enterprises LLC	$22,338.00	Build	Options
Northern	Primary	Aramsco Inc	$20,750.00	Build	Options
	Alternate	Vetted Security Solutions	$20,900.00	Build	Options
	Alternate	Croc Enterprises LLC	$22,338.00	Build	Options
Central	Primary	Aramsco Inc	$20,750.00	Build	Options
	Alternate	Vetted Security Solutions	$20,900.00	Build	Options
	Alternate	Croc Enterprises LLC	$22,338.00	Build	Options
Southern	Primary	Aramsco Inc	$20,750.00	Build	Options
	Alternate	Vetted Security Solutions	$20,900.00	Build	Options
	Alternate	Croc Enterprises LLC	$22,750.00	Build	Options

Bid Award

Contract: FSA26-EQU24.0, Equipment

Group: Roadway Advisory Board: Mobile Message Board

Item: 371, Wanco, Full Size Full Matrix Message Board Trailer, WTMMB-A

Description: Refer FSA Base Specifications PDF document.

Model Upgrade/Downgrade:

Zone	Rank	Vendor	Price	Build File	Options File
Western	Primary	Aramsco Inc	$21,800.00	Build	Options
	Alternate	Vetted Security Solutions	$21,900.00	Build	Options
	Alternate	Croc Enterprises LLC	$23,238.00	Build	Options
Northern	Primary	Aramsco Inc	$21,800.00	Build	Options
	Alternate	Vetted Security Solutions	$21,900.00	Build	Options
	Alternate	Croc Enterprises LLC	$23,238.00	Build	Options
Central	Primary	Aramsco Inc	$21,800.00	Build	Options
	Alternate	Vetted Security Solutions	$21,900.00	Build	Options
	Alternate	Croc Enterprises LLC	$23,238.00	Build	Options
Southern	Primary	Aramsco Inc	$21,800.00	Build	Options
	Alternate	Vetted Security Solutions	$21,900.00	Build	Options
	Alternate	Croc Enterprises LLC	$23,750.00	Build	Options

Bid Award

Contract: FSA26-EQU24.0, Equipment

Group: Roadway Advisory Board: Mobile Speed Board

Item: 372, All Traffic Solutions, INC, Shield 12 - with ATS-3 Trailer - No Cloud, 4001809FSA

Description: Refer FSA Base Specifications PDF document.

Model Upgrade/Downgrade:

Zone	Rank	Vendor	Price	Build File	Options File
Western	Primary	All Traffic Solutions, LLC (A TAPCO Brand)	$9,563.00	Build	Options
Northern	Primary	All Traffic Solutions, LLC (A TAPCO Brand)	$9,563.00	Build	Options
Central	Primary	All Traffic Solutions, LLC (A TAPCO Brand)	$9,563.00	Build	Options
Southern	Primary	All Traffic Solutions, LLC (A TAPCO Brand)	$9,563.00	Build	Options

Bid Award

Contract: FSA26-EQU24.0, Equipment

Group: Roadway Advisory Board: Mobile Speed Board

Item: 373, All Traffic Solutions, INC, SpeedAlert 18 - With ATS-3 Trailer - No Cloud, 4001811FSA

Description: Refer FSA Base Specifications PDF document.

Model Upgrade/Downgrade:

Zone	Rank	Vendor	Price	Build File	Options File
Western	Primary	All Traffic Solutions, LLC (A TAPCO Brand)	$11,090.00	Build	Options
Northern	Primary	All Traffic Solutions, LLC (A TAPCO Brand)	$11,090.00	Build	Options
Central	Primary	All Traffic Solutions, LLC (A TAPCO Brand)	$11,090.00	Build	Options
Southern	Primary	All Traffic Solutions, LLC (A TAPCO Brand)	$11,090.00	Build	Options

Bid Award

Contract: FSA26-EQU24.0, Equipment

Group: Roadway Advisory Board: Mobile Speed Board

Item: 374, K&K Systems, LT-ER12, LT-ER12

Description: Refer FSA Base Specifications PDF document.

Model Upgrade/Downgrade:

Zone	Rank	Vendor	Price	Build File	Options File
Western	Primary	K&K Systems, Inc.	$5,628.00	Build	Options
Northern	Primary	K&K Systems, Inc.	$5,628.00	Build	Options
Central	Primary	K&K Systems, Inc.	$5,628.00	Build	Options
Southern	Primary	K&K Systems, Inc.	$5,628.00	Build	Options

Bid Award

Contract: FSA26-EQU24.0, Equipment

Group: Roadway Advisory Board: Mobile Speed Board

Item: 375, Kustom Signal, Smart, 12

Description: Refer FSA Base Specifications PDF document.

Model Upgrade/Downgrade:

Zone	Rank	Vendor	Price	Build File	Options File
Western	Primary	Kustom Signals, Inc.	$6,624.00	Build	Options
Northern	Primary	Kustom Signals, Inc.	$6,624.00	Build	Options
Central	Primary	Kustom Signals, Inc.	$6,624.00	Build	Options
Southern	Primary	Kustom Signals, Inc.	$6,624.00	Build	Options

Bid Award

Contract: FSA26-EQU24.0, Equipment

Group: Roadway Advisory Board: Mobile Speed Board

Item: 376, Ver-Mac, SP-710V, SP-710V

Description: Refer FSA Base Specifications PDF document.

Model Upgrade/Downgrade:

Zone	Rank	Vendor	Price	Build File	Options File
Western	Primary	Federal Contracts LLC DBA Federal Contracts Company	$10,449.00	Build	Options
Northern	Primary	Federal Contracts LLC DBA Federal Contracts Company	$10,449.00	Build	Options
Central	Primary	Federal Contracts LLC DBA Federal Contracts Company	$10,449.00	Build	Options
Southern	Primary	Federal Contracts LLC DBA Federal Contracts Company	$10,449.00	Build	Options

Bid Award

Contract: FSA26-EQU24.0, Equipment

Group: Roadway Advisory Board: Mobile Speed Board

Item: 377, Wanco, Compact Radar Speed Trailer, WSDT3-S

Description: Refer FSA Base Specifications PDF document.

Model Upgrade/Downgrade:

Zone	Rank	Vendor	Price	Build File	Options File
Western	Primary	Aramsco Inc	$10,250.00	Build	Options
	Alternate	Vetted Security Solutions	$13,250.00	Build	Options
	Alternate	Jet-Vac Equipment Company, LLC	$15,431.00	Build	Options
Northern	Primary	Aramsco Inc	$10,250.00	Build	Options
	Alternate	Vetted Security Solutions	$13,250.00	Build	Options
	Alternate	Jet-Vac Equipment Company, LLC	$15,431.00	Build	Options
Central	Primary	Aramsco Inc	$10,250.00	Build	Options
	Alternate	Vetted Security Solutions	$13,250.00	Build	Options
	Alternate	Jet-Vac Equipment Company, LLC	$15,431.00	Build	Options
Southern	Primary	Aramsco Inc	$10,250.00	Build	Options
	Alternate	Vetted Security Solutions	$13,250.00	Build	Options
	Alternate	Jet-Vac Equipment Company, LLC	$15,431.00	Build	Options

Bid Award

Contract: FSA26-EQU24.0, Equipment

Group: Roadway Advisory Board: Mobile Speed Board/Automatic License Plate Reader

Item: 378, Vetted Security Solutions, ALPR Speed Trailer-STANDARD, VH-SPD-STD

Description: Refer FSA Base Specifications PDF document.

Model Upgrade/Downgrade:

Zone	Rank	Vendor	Price	Build File	Options File
Western	Primary	Vetted Security Solutions	$34,757.00	Build	Options
Northern	Primary	Vetted Security Solutions	$34,757.00	Build	Options
Central	Primary	Vetted Security Solutions	$34,757.00	Build	Options
Southern	Primary	Vetted Security Solutions	$34,757.00	Build	Options

Bid Award

Contract: FSA26-EQU24.0, Equipment

Group: Roadway Advisory Board: Mobile Traffic Advisory/Directional Signal Board

Item: 379, K&K Systems, AT154896, AT154896

Description: Refer FSA Base Specifications PDF document.

Model Upgrade/Downgrade:

Zone	Rank	Vendor	Price	Build File	Options File
Western	Primary	K&K Systems, Inc.	$4,756.00	Build	Options
Northern	Primary	K&K Systems, Inc.	$4,756.00	Build	Options
Central	Primary	K&K Systems, Inc.	$4,756.00	Build	Options
Southern	Primary	K&K Systems, Inc.	$4,756.00	Build	Options

Bid Award

Contract: FSA26-EQU24.0, Equipment

Group: Roadway Advisory Board: Mobile Traffic Advisory/Directional Signal Board

Item: 380, Traffix Device, Scorpion II Trailer Attenuator with Mobile Traffic Advisory / Directional Signal Board, 10002-TL3M-12TA

Description: Refer FSA Base Specifications PDF document.

Model Upgrade/Downgrade:

Zone	Rank	Vendor	Price	Build File	Options File
Western	Primary	Aramsco Inc	$34,850.00	Build	Options
	Alternate	Croc Enterprises LLC	$43,413.00	Build	Options
Northern	Primary	Aramsco Inc	$34,850.00	Build	Options
	Alternate	Croc Enterprises LLC	$43,413.00	Build	Options
Central	Primary	Aramsco Inc	$34,850.00	Build	Options
	Alternate	Croc Enterprises LLC	$43,413.00	Build	Options
Southern	Primary	Aramsco Inc	$34,850.00	Build	Options
	Alternate	Croc Enterprises LLC	$44,000.00	Build	Options

Bid Award

Contract: FSA26-EQU24.0, Equipment

Group: Roadway Advisory Board: Mobile Traffic Advisory/Directional Signal Board

Item: 381, Ver-Mac, ST-4825, ST-4825

Description: Refer FSA Base Specifications PDF document.

Model Upgrade/Downgrade:

Zone	Rank	Vendor	Price	Build File	Options File
Western	Primary	Federal Contracts LLC DBA Federal Contracts Company	$7,106.00	Build	Options
Northern	Primary	Federal Contracts LLC DBA Federal Contracts Company	$7,106.00	Build	Options
Central	Primary	Federal Contracts LLC DBA Federal Contracts Company	$7,106.00	Build	Options
Southern	Primary	Federal Contracts LLC DBA Federal Contracts Company	$7,106.00	Build	Options

Bid Award

Contract: FSA26-EQU24.0, Equipment

Group: Roadway Advisory Board: Mobile Traffic Advisory/Directional Signal Board

Item: 382, Wanco, Metro Matrix Message Board Trailer, WVTMM-L

Description: Refer FSA Base Specifications PDF document.

Model Upgrade/Downgrade:

Zone	Rank	Vendor	Price	Build File	Options File
Western	Primary	Vetted Security Solutions	$18,000.00	Build	Options
	Alternate	Aramsco Inc	$18,250.00	Build	Options
	Alternate	Croc Enterprises LLC	$19,584.00	Build	Options
Northern	Primary	Vetted Security Solutions	$18,000.00	Build	Options
	Alternate	Aramsco Inc	$18,250.00	Build	Options
	Alternate	Croc Enterprises LLC	$19,584.00	Build	Options
Central	Primary	Vetted Security Solutions	$18,000.00	Build	Options
	Alternate	Aramsco Inc	$18,250.00	Build	Options
	Alternate	Croc Enterprises LLC	$19,584.00	Build	Options
Southern	Primary	Vetted Security Solutions	$18,000.00	Build	Options
	Alternate	Aramsco Inc	$18,250.00	Build	Options
	Alternate	Croc Enterprises LLC	$20,125.00	Build	Options

Bid Award

Contract: FSA26-EQU24.0, Equipment

Group: Roadway Advisory Board: Mobile Traffic Advisory/Directional Signal Board

Item: 383, Wanco, WECO Arrow Board Trailer, WTSP55-LSA

Description: Refer FSA Base Specifications PDF document.

Model Upgrade/Downgrade:

Zone	Rank	Vendor	Price	Build File	Options File
Western	Primary	Aramsco Inc	$5,950.00	Build	Options
	Alternate	Vetted Security Solutions	$6,350.00	Build	Options
	Alternate	Croc Enterprises LLC	$6,588.00	Build	Options
Northern	Primary	Aramsco Inc	$5,950.00	Build	Options
	Alternate	Vetted Security Solutions	$6,350.00	Build	Options
	Alternate	Croc Enterprises LLC	$6,588.00	Build	Options
Central	Primary	Aramsco Inc	$5,950.00	Build	Options
	Alternate	Vetted Security Solutions	$6,350.00	Build	Options
	Alternate	Croc Enterprises LLC	$6,588.00	Build	Options
Southern	Primary	Aramsco Inc	$5,950.00	Build	Options
	Alternate	Vetted Security Solutions	$6,350.00	Build	Options
	Alternate	Jet-Vac Equipment Company, LLC	$6,763.00	Build	Options

Bid Award

Contract: FSA26-EQU24.0, Equipment

Group: Roller: Compact 2,900 lbs. - Double Drum Roller - 38in. Width

Item: 384, BASIC Equipment, Split Drum Vibratory Roller, 120V

Description: Refer FSA Base Specifications PDF document.

Model Upgrade/Downgrade:

Zone	Rank	Vendor	Price	Build File	Options File
Western	Primary	BASIC Equipment	$48,100.00	Build	Options
Northern	Primary	BASIC Equipment	$48,100.00	Build	Options
Central	Primary	BASIC Equipment	$48,500.00	Build	Options
Southern	Primary	BASIC Equipment	$49,200.00	Build	Options

Bid Award

Contract: FSA26-EQU24.0, Equipment

Group: Roller: Compact 2,900 lbs. - Double Drum Roller - 38in. Width

Item: 660, Caterpillar, CB1.8, CB1.8

Description: Refer FSA Base Specifications PDF document.

Model Upgrade/Downgrade:

Zone	Rank	Vendor	Price	Build File	Options File
Western	Primary	Ring Power Corporation	$44,363.00	Build	Options
Northern	Primary	Ring Power Corporation	$44,363.00	Build	Options
Central	Primary	Ring Power Corporation	$44,363.00	Build	Options
Southern	Primary	Kelly Tractor Co	$40,795.00	Build	Options

Bid Award

Contract: FSA26-EQU24.0, Equipment

Group: Roller: Compact, Pneumatic Asphalt Roller

Item: 385, BASIC Equipment, Pneumatic Asphalt Roller, 700

Description: Refer FSA Base Specifications PDF document.

Model Upgrade/Downgrade:

Zone	Rank	Vendor	Price	Build File	Options File
Western	Primary	BASIC Equipment	$67,800.00	Build	
Northern	Primary	BASIC Equipment	$67,800.00	Build	
Central	Primary	BASIC Equipment	$68,000.00	Build	
Southern	Primary	BASIC Equipment	$68,300.00	Build	

Bid Award

Contract: FSA26-EQU24.0, Equipment

Group: Roller: Compact, Pneumatic Asphalt Roller

Item: 661, Weiler, CT3A, CT3A

Description: Refer FSA Base Specifications PDF document.

Model Upgrade/Downgrade:

Zone	Rank	Vendor	Price	Build File	Options File
Western	Primary	Ring Power Corporation	$86,011.00	Build	Options
Northern	Primary	Ring Power Corporation	$86,011.00	Build	Options
Central	Primary	Ring Power Corporation	$86,011.00	Build	Options
Southern	Primary	Kelly Tractor Co	$82,000.00	Build	Options

Bid Award

Contract: FSA26-EQU24.0, Equipment

Group: Roller: Compaction Roller 15,000 lbs. - Single Drum

Item: 388, Caterpillar, CS7, CS7

Description: Refer FSA Base Specifications PDF document.

Model Upgrade/Downgrade:

Zone	Rank	Vendor	Price	Build File	Options File
Western	Primary	Ring Power Corporation	$145,217.00	Build	Options
Northern	Primary	Ring Power Corporation	$145,217.00	Build	Options
Central	Primary	Ring Power Corporation	$145,217.00	Build	Options
Southern	Primary	Kelly Tractor Co	$139,880.00	Build	Options

Bid Award

Contract: FSA26-EQU24.0, Equipment

Group: Roller: Compaction Roller 15,000 lbs. - Single Drum

Item: 389, Hamm, HC70i Single Drum Vibratory Roller, HC70i

Description: Refer FSA Base Specifications PDF document.

Model Upgrade/Downgrade:

Zone	Rank	Vendor	Price	Build File	Options File
Western	Primary	Dobbs Equipment, LLC	$142,475.00	Build	Options
Northern	Primary	Dobbs Equipment, LLC	$142,475.00	Build	Options
Central	Primary	Dobbs Equipment, LLC	$142,475.00	Build	Options
Southern	Primary	Dobbs Equipment, LLC	$142,475.00	Build	Options

Bid Award

Contract: FSA26-EQU24.0, Equipment

Group: Roller: Compaction Roller 15,000 lbs. - Single Drum

Item: 391, Sakai, SV414D, SV414D

Description: Refer FSA Base Specifications PDF document.

Model Upgrade/Downgrade:

Zone	Rank	Vendor	Price	Build File	Options File
Western	Primary	GREAT SOUTHERN EQUIPMENT, LLC	$131,724.00	Build	Options
Northern	Primary	GREAT SOUTHERN EQUIPMENT, LLC	$131,724.00	Build	Options
Central	Primary	GREAT SOUTHERN EQUIPMENT, LLC	$131,724.00	Build	Options
Southern	Primary	GREAT SOUTHERN EQUIPMENT, LLC	$131,724.00	Build	Options

Bid Award

Contract: FSA26-EQU24.0, Equipment

Group: Roller: Compaction Roller 15,000 lbs. - Single Drum

Item: 393, Volvo, SD75, SD75

Description: Refer FSA Base Specifications PDF document.

Model Upgrade/Downgrade:

Zone	Rank	Vendor	Price	Build File	Options File
Western	Primary	Cowin Equipment Company	$116,563.00	Build	Options
Northern	Primary	Alta Construction Equipment Florida, LLC	$116,000.00	Build	Options
Central	Primary	Alta Construction Equipment Florida, LLC	$116,000.00	Build	Options
Southern	Primary	Alta Construction Equipment Florida, LLC	$116,000.00	Build	Options

Bid Award

Contract: FSA26-EQU24.0, Equipment

Group: Roller: Large 22,000 lbs. - Double Drum Roller - 70in. Width

Item: 396, Caterpillar, CB13, CB13

Description: Refer FSA Base Specifications PDF document.

Model Upgrade/Downgrade:

Zone	Rank	Vendor	Price	Build File	Options File
Western	Primary	Ring Power Corporation	$213,162.00	Build	Options
Northern	Primary	Ring Power Corporation	$213,162.00	Build	Options
Central	Primary	Ring Power Corporation	$213,162.00	Build	Options
Southern	Primary	Kelly Tractor Co	$198,540.00	Build	Options

Bid Award

Contract: FSA26-EQU24.0, Equipment

Group: Roller: Large 22,000 lbs. - Double Drum Roller - 70in. Width

Item: 398, Hamm, HD+90iVV, HD+90iVV

Description: Refer FSA Base Specifications PDF document.

Model Upgrade/Downgrade:

Zone	Rank	Vendor	Price	Build File	Options File
Western	Primary	Dobbs Equipment, LLC	$212,675.00	Build	Options
Northern	Primary	Dobbs Equipment, LLC	$212,675.00	Build	Options
Central	Primary	Dobbs Equipment, LLC	$212,675.00	Build	Options
Southern	Primary	Dobbs Equipment, LLC	$212,675.00	Build	Options

Bid Award

Contract: FSA26-EQU24.0, Equipment

Group: Roller: Large 22,000 lbs. - Double Drum Roller - 70in. Width

Item: 399, Sakai, SW884, SW884

Description: Refer FSA Base Specifications PDF document.

Model Upgrade/Downgrade:

Zone	Rank	Vendor	Price	Build File	Options File
Western	Primary	GREAT SOUTHERN EQUIPMENT, LLC	$212,415.00	Build	Options
Northern	Primary	GREAT SOUTHERN EQUIPMENT, LLC	$212,415.00	Build	Options
Central	Primary	GREAT SOUTHERN EQUIPMENT, LLC	$212,415.00	Build	Options
Southern	Primary	GREAT SOUTHERN EQUIPMENT, LLC	$212,415.00	Build	Options

Bid Award

Contract: FSA26-EQU24.0, Equipment

Group: Roller: Large 22,000 lbs. - Double Drum Roller - 70in. Width

Item: 400, Volvo, DD120, DD120

Description: Refer FSA Base Specifications PDF document.

Model Upgrade/Downgrade:

Zone	Rank	Vendor	Price	Build File	Options File
Western	Primary	Cowin Equipment Company	$177,402.00	Build	Options
Northern	Primary	Alta Construction Equipment Florida, LLC	$177,000.00	Build	Options
Central	Primary	Alta Construction Equipment Florida, LLC	$177,000.00	Build	Options
Southern	Primary	Alta Construction Equipment Florida, LLC	$177,000.00	Build	Options

Bid Award

Contract: FSA26-EQU24.0, Equipment

Group: Roller: Small 5,400 lbs. - Double Drum Roller - 47in. Width

Item: 403, Caterpillar, CB2.7, CB2.7

Description: Refer FSA Base Specifications PDF document.

Model Upgrade/Downgrade:

Zone	Rank	Vendor	Price	Build File	Options File
Western	Primary	Ring Power Corporation	$71,530.00	Build	Options
Northern	Primary	Ring Power Corporation	$71,530.00	Build	Options
Central	Primary	Ring Power Corporation	$71,530.00	Build	Options
Southern	Primary	Kelly Tractor Co	$63,980.00	Build	Options

Bid Award

Contract: FSA26-EQU24.0, Equipment

Group: Roller: Small 5,400 lbs. - Double Drum Roller - 47in. Width

Item: 405, Hamm, HD12-VV, HD12-VV

Description: Refer FSA Base Specifications PDF document.

Model Upgrade/Downgrade:

Zone	Rank	Vendor	Price	Build File	Options File
Western	Primary	Dobbs Equipment, LLC	$65,495.00	Build	Options
Northern	Primary	Dobbs Equipment, LLC	$65,495.00	Build	Options
Central	Primary	Dobbs Equipment, LLC	$65,495.00	Build	Options
Southern	Primary	Dobbs Equipment, LLC	$65,495.00	Build	Options

Bid Award

Contract: FSA26-EQU24.0, Equipment

Group: Roller: Small 5,400 lbs. - Double Drum Roller - 47in. Width

Item: 406, Volvo, DD25, DD25

Description: Refer FSA Base Specifications PDF document.

Model Upgrade/Downgrade:

Zone	Rank	Vendor	Price	Build File	Options File
Western	Primary	Cowin Equipment Company	$50,452.00	Build	Options
Northern	Primary	Alta Construction Equipment Florida, LLC	$52,000.00	Build	Options
Central	Primary	Alta Construction Equipment Florida, LLC	$52,000.00	Build	Options
Southern	Primary	Alta Construction Equipment Florida, LLC	$52,000.00	Build	Options

Bid Award

Contract: FSA26-EQU24.0, Equipment

Group: Security Camera: Security Camera Tower - Trailer Mounted

Item: 407, American Signal Company, Zone Watch - T15 Mobile CCTV Trailer, AMS40102157

Description: Refer FSA Base Specifications PDF document.

Model Upgrade/Downgrade:

Zone	Rank	Vendor	Price	Build File	Options File
Western	Primary	American Signal Company	$26,765.00	Build	Options
Northern	Primary	American Signal Company	$26,765.00	Build	Options
Central	Primary	American Signal Company	$26,967.00	Build	Options
Southern	Primary	American Signal Company	$27,119.00	Build	Options

Bid Award

Contract: FSA26-EQU24.0, Equipment

Group: Security Camera: Security Camera Tower - Trailer Mounted

Item: 408, OMJC Signal, Security Camera Trailer, OWL

Description: Refer FSA Base Specifications PDF document.

Model Upgrade/Downgrade:

Zone	Rank	Vendor	Price	Build File	Options File
Western	Primary	OMJC Signal Inc	$33,285.00	Build	Options
Northern	Primary	OMJC Signal Inc	$33,285.00	Build	Options
Central	Primary	OMJC Signal Inc	$33,285.00	Build	Options
Southern	Primary	OMJC Signal Inc	$33,285.00	Build	Options

Bid Award

Contract: FSA26-EQU24.0, Equipment

Group: Security Camera: Security Camera Tower - Trailer Mounted

Item: 409, Vetted Security Solutions, Vetted Long Run Surveillance Trailer, VH-SURV-LR-1600W

Description: Refer FSA Base Specifications PDF document.

Model Upgrade/Downgrade:

Zone	Rank	Vendor	Price	Build File	Options File
Western	Primary	Vetted Security Solutions	$53,928.00	Build	Options
Northern	Primary	Vetted Security Solutions	$53,928.00	Build	Options
Central	Primary	Vetted Security Solutions	$53,928.00	Build	Options
Southern	Primary	Vetted Security Solutions	$53,928.00	Build	Options

Bid Award

Contract: FSA26-EQU24.0, Equipment

Group: Security Camera: Security Camera Tower - Trailer Mounted

Item: 662, Ver-Mac, CT-2430, CT-2430

Description: Refer FSA Base Specifications PDF document.

Model Upgrade/Downgrade:

Zone	Rank	Vendor	Price	Build File	Options File
Western	Primary	Federal Contracts LLC DBA Federal Contracts Company	$23,287.00	Build	Options
Northern	Primary	Federal Contracts LLC DBA Federal Contracts Company	$23,287.00	Build	Options
Central	Primary	Federal Contracts LLC DBA Federal Contracts Company	$23,287.00	Build	Options
Southern	Primary	Federal Contracts LLC DBA Federal Contracts Company	$23,287.00	Build	Options

Bid Award

Contract: FSA26-EQU24.0, Equipment

Group: Sewer Cleaner: Combination Sewer Cleaning/Vacuum Machine Body - 10 cubic yd.

Item: 410, Aquatech, B-10, B-10

Description: Refer FSA Base Specifications PDF document.

Model Upgrade/Downgrade:

Zone	Rank	Vendor	Price	Build File	Options File
Western	Primary	Pat`s Pump & Blower	$389,000.00	Build	Options
Northern	Primary	Pat`s Pump & Blower	$389,000.00	Build	Options
Central	Primary	Pat`s Pump & Blower	$389,000.00	Build	Options
Southern	Primary	Pat`s Pump & Blower	$389,000.00	Build	Options

Bid Award

Contract: FSA26-EQU24.0, Equipment

Group: Sewer Cleaner: Combination Sewer Cleaning/Vacuum Machine Body - 10 cubic yd.

Item: 411, Gapvax, MC, 1510

Description: Refer FSA Base Specifications PDF document.

Model Upgrade/Downgrade:

Zone	Rank	Vendor	Price	Build File	Options File
Western	Primary	Evervac Equipment	$371,120.00	Build	Options
Northern	Primary	Evervac Equipment	$371,120.00	Build	Options
Central	Primary	Evervac Equipment	$371,120.00	Build	Options
Southern	Primary	Evervac Equipment	$371,120.00	Build	Options

Bid Award

Contract: FSA26-EQU24.0, Equipment

Group: Sewer Cleaner: Combination Sewer Cleaning/Vacuum Machine Body - 10 cubic yd.

Item: 412, PipeHunter, VacHunter Combo, 101035 PH8C

Description: Refer FSA Base Specifications PDF document.

Model Upgrade/Downgrade:

Zone	Rank	Vendor	Price	Build File	Options File
Western	Primary	Texas Underground	$355,000.00	Build	Options
Northern	Primary	Texas Underground	$355,000.00	Build	Options
Central	Primary	Texas Underground	$355,000.00	Build	Options
Southern	Primary	Texas Underground	$355,000.00	Build	Options

Bid Award

Contract: FSA26-EQU24.0, Equipment

Group: Sewer Cleaner: Combination Sewer Cleaning/Vacuum Machine Body - 10 cubic yd.

Item: 413, Sewer Equipment, 900 ECO-12YD, 900 ECO-12YD

Description: Refer FSA Base Specifications PDF document.

Model Upgrade/Downgrade:

Zone	Rank	Vendor	Price	Build File	Options File
Western	Primary	Jet-Vac Equipment Company, LLC	$390,132.00	Build	Options
Northern	Primary	Jet-Vac Equipment Company, LLC	$390,132.00	Build	Options
Central	Primary	Jet-Vac Equipment Company, LLC	$390,132.00	Build	Options
Southern	Primary	Jet-Vac Equipment Company, LLC	$390,132.00	Build	Options

Bid Award

Contract: FSA26-EQU24.0, Equipment

Group: Sewer Cleaner: Combination Sewer Cleaning/Vacuum Machine Body - 10 cubic yd.

Item: 414, Super Products, Camel Max, 1200

Description: Refer FSA Base Specifications PDF document.

Model Upgrade/Downgrade:

Zone	Rank	Vendor	Price	Build File	Options File
Western	Primary	Container Systems & Equipment Co., Inc.	$386,809.00	Build	Options
Northern	Primary	Container Systems & Equipment Co., Inc.	$386,809.00	Build	Options
Central	Primary	Container Systems & Equipment Co., Inc.	$386,809.00	Build	Options
Southern	Primary	Container Systems & Equipment Co., Inc.	$386,809.00	Build	Options

Bid Award

Contract: FSA26-EQU24.0, Equipment

Group: Sewer Cleaner: Combination Sewer Cleaning/Vacuum Machine Body - 10 cubic yd.

Item: 415, Vacall, AJV1010, AJV1010

Description: Refer FSA Base Specifications PDF document.

Model Upgrade/Downgrade:

Zone	Rank	Vendor	Price	Build File	Options File
Western	Primary	GREAT SOUTHERN EQUIPMENT, LLC	$357,269.00	Build	Options
Northern	Primary	GREAT SOUTHERN EQUIPMENT, LLC	$357,269.00	Build	Options
Central	Primary	GREAT SOUTHERN EQUIPMENT, LLC	$357,269.00	Build	Options
Southern	Primary	GREAT SOUTHERN EQUIPMENT, LLC	$357,269.00	Build	Options

Bid Award

Contract: FSA26-EQU24.0, Equipment

Group: Sewer Cleaner: Combination Sewer Cleaning/Vacuum Machine Body - 10 cubic yd.

Item: 416, Vac-Con, V310N/1000, V310N/1000

Description: Refer FSA Base Specifications PDF document.

Model Upgrade/Downgrade:

Zone	Rank	Vendor	Price	Build File	Options File
Western	Primary	Southern Sewer Equipment Sales	$323,092.00	Build	Options
Northern	Primary	Southern Sewer Equipment Sales	$323,092.00	Build	Options
Central	Primary	Southern Sewer Equipment Sales	$323,092.00	Build	Options
Southern	Primary	Southern Sewer Equipment Sales	$323,092.00	Build	Options

Bid Award

Contract: FSA26-EQU24.0, Equipment

Group: Sewer Cleaner: Combination Sewer Cleaning/Vacuum Machine Body - 10 cubic yd.

Item: 417, Vac-Con, VPD4210SA/1000, VPD4210SA/1000

Description: Refer FSA Base Specifications PDF document.

Model Upgrade/Downgrade:

Zone	Rank	Vendor	Price	Build File	Options File
Western	Primary	Southern Sewer Equipment Sales	$383,042.00	Build	Options
Northern	Primary	Southern Sewer Equipment Sales	$383,042.00	Build	Options
Central	Primary	Southern Sewer Equipment Sales	$383,042.00	Build	Options
Southern	Primary	Southern Sewer Equipment Sales	$383,042.00	Build	Options

Bid Award

Contract: FSA26-EQU24.0, Equipment

Group: Sewer Cleaner: Combination Sewer Cleaning/Vacuum Machine Body - 10 cubic yd.

Item: 418, Vactor, 2100l, 2100l

Description: Refer FSA Base Specifications PDF document.

Model Upgrade/Downgrade:

Zone	Rank	Vendor	Price	Build File	Options File
Western	Primary	Environmental Products Group	$360,314.00	Build	Options
Northern	Primary	Environmental Products Group	$360,314.00	Build	Options
Central	Primary	Environmental Products Group	$360,314.00	Build	Options
Southern	Primary	Environmental Products Group	$360,314.00	Build	Options

Bid Award

Contract: FSA26-EQU24.0, Equipment

Group: Sewer Cleaner: Easement Machine

Item: 419, Prowler Equipment, Extendable Track Easement Machine, PR-ET

Description: Refer FSA Base Specifications PDF document.

Model Upgrade/Downgrade:

Zone	Rank	Vendor	Price	Build File	Options File
Western	Primary	Evervac Equipment	$72,000.00	Build	Options
Northern	Primary	Evervac Equipment	$72,000.00	Build	Options
Central	Primary	Evervac Equipment	$72,000.00	Build	Options
Southern	Primary	Evervac Equipment	$72,000.00	Build	Options

Bid Award

Contract: FSA26-EQU24.0, Equipment

Group: Sewer Cleaner: Easement Machine

Item: 663, Vactor, Ace, Ace

Description: Refer FSA Base Specifications PDF document.

Model Upgrade/Downgrade:

Zone	Rank	Vendor	Price	Build File	Options File
Western	Primary	Environmental Products Group	$93,981.00	Build	Options
Northern	Primary	Environmental Products Group	$93,981.00	Build	Options
Central	Primary	Environmental Products Group	$93,981.00	Build	Options
Southern	Primary	Environmental Products Group	$93,981.00	Build	Options

Bid Award

Contract: FSA26-EQU24.0, Equipment

Group: Sewer Cleaner: Trailer Mounted Sewer Cleaner

Item: 423, PipeHunter, 700 Gallon Tandem Trailer Jetter, 3744

Description: Refer FSA Base Specifications PDF document.

Model Upgrade/Downgrade:

Zone	Rank	Vendor	Price	Build File	Options File
Western	Primary	Texas Underground	$85,000.00	Build	Options
Northern	Primary	Texas Underground	$85,000.00	Build	Options
Central	Primary	Texas Underground	$85,000.00	Build	Options
Southern	Primary	Texas Underground	$85,000.00	Build	Options

Bid Award

Contract: FSA26-EQU24.0, Equipment

Group: Sewer Cleaner: Trailer Mounted Sewer Cleaner

Item: 425, Vac-Con, VecJet, VJ750

Description: Refer FSA Base Specifications PDF document.

Model Upgrade/Downgrade:

Zone	Rank	Vendor	Price	Build File	Options File
Western	Primary	Southern Sewer Equipment Sales	$93,754.00	Build	Options
Northern	Primary	Southern Sewer Equipment Sales	$93,754.00	Build	Options
Central	Primary	Southern Sewer Equipment Sales	$93,754.00	Build	Options
Southern	Primary	Southern Sewer Equipment Sales	$93,754.00	Build	Options

Bid Award

Contract: FSA26-EQU24.0, Equipment

Group: Sewer Cleaner: Trailer Mounted Sewer Cleaner

Item: 426, Vactor, RamJet, 4018

Description: Refer FSA Base Specifications PDF document.

Model Upgrade/Downgrade:

Zone	Rank	Vendor	Price	Build File	Options File
Western	Primary	Environmental Products Group	$93,072.00	Build	Options
Northern	Primary	Environmental Products Group	$93,072.00	Build	Options
Central	Primary	Environmental Products Group	$93,072.00	Build	Options
Southern	Primary	Environmental Products Group	$93,072.00	Build	Options

Bid Award

Contract: FSA26-EQU24.0, Equipment

Group: Shop Tools & Equipment

Item: 432, ARI-HETRA, Brake Hub Removal Jack, WS-18-HR

Description: Refer FSA Base Specifications PDF document.

Model Upgrade/Downgrade:

Zone	Rank	Vendor	Price	Build File	Options File
Western	Primary	ARI Phoenix, Inc.	$6,286.00	Build	Options
Northern	Primary	ARI Phoenix, Inc.	$6,286.00	Build	Options
Central	Primary	ARI Phoenix, Inc.	$6,286.00	Build	Options
Southern	Primary	ARI Phoenix, Inc.	$6,286.00	Build	Options

Bid Award

Contract: FSA26-EQU24.0, Equipment

Group: Shop Tools & Equipment

Item: 433, ARI-HETRA, Floor Jack, WS-16124

Description: Refer FSA Base Specifications PDF document.

Model Upgrade/Downgrade:

Zone	Rank	Vendor	Price	Build File	Options File
Western	Primary	ARI Phoenix, Inc.	$4,743.00	Build	Options
Northern	Primary	ARI Phoenix, Inc.	$4,743.00	Build	Options
Central	Primary	ARI Phoenix, Inc.	$4,743.00	Build	Options
Southern	Primary	ARI Phoenix, Inc.	$4,743.00	Build	Options

Bid Award

Contract: FSA26-EQU24.0, Equipment

Group: Shop Tools & Equipment

Item: 434, ARI-HETRA, King Pin Press, WS-KPP143

Description: Refer FSA Base Specifications PDF document.

Model Upgrade/Downgrade:

Zone	Rank	Vendor	Price	Build File	Options File
Western	Primary	ARI Phoenix, Inc.	$10,172.00	Build	Options
Northern	Primary	ARI Phoenix, Inc.	$10,172.00	Build	Options
Central	Primary	ARI Phoenix, Inc.	$10,172.00	Build	Options
Southern	Primary	ARI Phoenix, Inc.	$10,172.00	Build	Options

Bid Award

Contract: FSA26-EQU24.0, Equipment

Group: Shop Tools & Equipment

Item: 435, ARI-HETRA, On Vehicle Brake Lathe, WS-BL44

Description: Refer FSA Base Specifications PDF document.

Model Upgrade/Downgrade:

Zone	Rank	Vendor	Price	Build File	Options File
Western	Primary	ARI Phoenix, Inc.	$25,051.00	Build	Options
Northern	Primary	ARI Phoenix, Inc.	$25,051.00	Build	Options
Central	Primary	ARI Phoenix, Inc.	$25,051.00	Build	Options
Southern	Primary	ARI Phoenix, Inc.	$25,051.00	Build	Options

Bid Award

Contract: FSA26-EQU24.0, Equipment

Group: Shop Tools & Equipment

Item: 436, ARI-HETRA, Tire Changer, WS-12645

Description: Refer FSA Base Specifications PDF document.

Model Upgrade/Downgrade:

Zone	Rank	Vendor	Price	Build File	Options File
Western	Primary	ARI Phoenix, Inc.	$23,257.00	Build	Options
Northern	Primary	ARI Phoenix, Inc.	$23,257.00	Build	Options
Central	Primary	ARI Phoenix, Inc.	$23,257.00	Build	Options
Southern	Primary	ARI Phoenix, Inc.	$23,257.00	Build	Options

Bid Award

Contract: FSA26-EQU24.0, Equipment

Group: Shop Tools & Equipment

Item: 437, ARI-HETRA, Tire Inflation Cage, WS-35026

Description: Refer FSA Base Specifications PDF document.

Model Upgrade/Downgrade:

Zone	Rank	Vendor	Price	Build File	Options File
Western	Primary	ARI Phoenix, Inc.	$8,850.00	Build	Options
Northern	Primary	ARI Phoenix, Inc.	$8,850.00	Build	Options
Central	Primary	ARI Phoenix, Inc.	$8,850.00	Build	Options
Southern	Primary	ARI Phoenix, Inc.	$8,850.00	Build	Options

Bid Award

Contract: FSA26-EQU24.0, Equipment

Group: Shop Tools & Equipment

Item: 438, ARI-HETRA, Wheel Balancer, WS-12890

Description: Refer FSA Base Specifications PDF document.

Model Upgrade/Downgrade:

Zone	Rank	Vendor	Price	Build File	Options File
Western	Primary	ARI Phoenix, Inc.	$14,784.00	Build	Options
Northern	Primary	ARI Phoenix, Inc.	$14,784.00	Build	Options
Central	Primary	ARI Phoenix, Inc.	$14,784.00	Build	Options
Southern	Primary	ARI Phoenix, Inc.	$14,784.00	Build	Options

Bid Award

Contract: FSA26-EQU24.0, Equipment

Group: Shop Tools & Equipment

Item: 439, ARI-HETRA, Wheel Dolly, WS-AH20440

Description: Refer FSA Base Specifications PDF document.

Model Upgrade/Downgrade:

Zone	Rank	Vendor	Price	Build File	Options File
Western	Primary	ARI Phoenix, Inc.	$5,131.00	Build	Options
Northern	Primary	ARI Phoenix, Inc.	$5,131.00	Build	Options
Central	Primary	ARI Phoenix, Inc.	$5,131.00	Build	Options
Southern	Primary	ARI Phoenix, Inc.	$5,131.00	Build	Options

Bid Award

Contract: FSA26-EQU24.0, Equipment

Group: Shop Tools & Equipment

Item: 440, Coats, Maxx 80, Maxx 80

Description: Refer FSA Base Specifications PDF document.

Model Upgrade/Downgrade:

Zone	Rank	Vendor	Price	Build File	Options File
Western	Primary	Federal Contracts LLC DBA Federal Contracts Company	$16,135.00	Build	Options
Northern	Primary	Federal Contracts LLC DBA Federal Contracts Company	$16,135.00	Build	Options
Central	Primary	Federal Contracts LLC DBA Federal Contracts Company	$16,135.00	Build	Options
Southern	Primary	Federal Contracts LLC DBA Federal Contracts Company	$16,135.00	Build	Options

Bid Award

Contract: FSA26-EQU24.0, Equipment

Group: Shop Tools & Equipment

Item: 450, Sullair, 3709B, 3709B

Description: Refer FSA Base Specifications PDF document.

Model Upgrade/Downgrade:

Zone	Rank	Vendor	Price	Build File	Options File
Western	Primary	Ring Power Corporation	$38,617.00	Build	Options
Northern	Primary	Ring Power Corporation	$38,617.00	Build	Options
Central	Primary	Ring Power Corporation	$38,617.00	Build	Options
Southern	Primary	Ring Power Corporation	$38,617.00	Build	Options

Bid Award

Contract: FSA26-EQU24.0, Equipment

Group: Shredder: Mobile Shredder/Grinder

Item: 452, Tana Shark, 440D, 440D

Description: Refer FSA Base Specifications PDF document.

Model Upgrade/Downgrade:

Zone	Rank	Vendor	Price	Build File	Options File
Western	Primary	Humdinger Equipment, Ltd.	$1,202,736.00	Build	Options
Northern	Primary	Humdinger Equipment, Ltd.	$1,202,736.00	Build	Options
Central	Primary	Humdinger Equipment, Ltd.	$1,202,736.00	Build	Options
Southern	Primary	Humdinger Equipment, Ltd.	$1,202,736.00	Build	Options

Bid Award

Contract: FSA26-EQU24.0, Equipment

Group: Simulator System: Equipment Operator Simulator

Item: 453, Caterpillar, Technology - Equipment Simulation, N/A

Description: Refer FSA Base Specifications PDF document.

Model Upgrade/Downgrade:

Zone	Rank	Vendor	Price	Build File	Options File
Western	Primary	Ring Power Corporation	$100,708.00	Build	Options
Northern	Primary	Ring Power Corporation	$100,708.00	Build	Options
Central	Primary	Ring Power Corporation	$100,708.00	Build	Options
Southern	Primary	Kelly Tractor Co	$125,000.00	Build	Options

Bid Award

Contract: FSA26-EQU24.0, Equipment

Group: Solid Waste Material Handler: Wheeled Type

Item: 454, Caterpillar, MH3022, MH3022

Description: Refer FSA Base Specifications PDF document.

Model Upgrade/Downgrade:

Zone	Rank	Vendor	Price	Build File	Options File
Western	Primary	Ring Power Corporation	$399,715.00	Build	Options
Northern	Primary	Ring Power Corporation	$399,715.00	Build	Options
Central	Primary	Ring Power Corporation	$399,715.00	Build	Options
Southern	Primary	Kelly Tractor Co	$349,900.00	Build	Options

Bid Award

Contract: FSA26-EQU24.0, Equipment

Group: Solid Waste Material Handler: Wheeled Type

Item: 455, Hyundai, HW250AMH, HW250AMH

Description: Refer FSA Base Specifications PDF document.

Model Upgrade/Downgrade:

Zone	Rank	Vendor	Price	Build File	Options File
Western	Primary	National Equipment Dealers, LLC	$419,000.00	Build	Options
Northern	Primary	National Equipment Dealers, LLC	$419,000.00	Build	Options
Central	Primary	National Equipment Dealers, LLC	$419,000.00	Build	Options
Southern	Primary	National Equipment Dealers, LLC	$419,000.00	Build	Options

Bid Award

Contract: FSA26-EQU24.0, Equipment

Group: Solid Waste Material Handler: Wheeled Type

Item: 456, Liebherr, LH26M, LH26M

Description: Refer FSA Base Specifications PDF document.

Model Upgrade/Downgrade:

Zone	Rank	Vendor	Price	Build File	Options File
Western	Primary	GREAT SOUTHERN EQUIPMENT, LLC	$505,674.00	Build	Options
Northern	Primary	GREAT SOUTHERN EQUIPMENT, LLC	$505,674.00	Build	Options
Central	Primary	GREAT SOUTHERN EQUIPMENT, LLC	$505,674.00	Build	Options
Southern	Primary	GREAT SOUTHERN EQUIPMENT, LLC	$505,674.00	Build	Options

Bid Award

Contract: FSA26-EQU24.0, Equipment

Group: Solid Waste Material Handler: Wheeled Type

Item: 457, Volvo, EW240, EW240

Description: Refer FSA Base Specifications PDF document.

Model Upgrade/Downgrade:

Zone	Rank	Vendor	Price	Build File	Options File
Western	Primary	Cowin Equipment Company	$484,041.00	Build	Options
Northern	Primary	Alta Construction Equipment Florida, LLC	$485,000.00	Build	Options
Central	Primary	Alta Construction Equipment Florida, LLC	$485,000.00	Build	Options
Southern	Primary	Alta Construction Equipment Florida, LLC	$485,000.00	Build	Options

Bid Award

Contract: FSA26-EQU24.0, Equipment

Group: Stump Cutter

Item: 458, Bandit, 2550, 2550

Description: Refer FSA Base Specifications PDF document.

Model Upgrade/Downgrade:

Zone	Rank	Vendor	Price	Build File	Options File
Western					
Northern					
Central					
Southern	Primary	Alta Construction Equipment Florida, LLC	$56,000.00	Build	Options

Bid Award

Contract: FSA26-EQU24.0, Equipment

Group: Stump Cutter

Item: 459, Toro, STX 38, STX 38

Description: Refer FSA Base Specifications PDF document.

Model Upgrade/Downgrade:

Zone	Rank	Vendor	Price	Build File	Options File
Western	Primary	Alta Construction Equipment Florida, LLC	$38,000.00	Build	Options
Northern	Primary	Alta Construction Equipment Florida, LLC	$38,000.00	Build	Options
Central	Primary	Alta Construction Equipment Florida, LLC	$38,000.00	Build	Options
Southern	Primary	Alta Construction Equipment Florida, LLC	$38,000.00	Build	Options

Bid Award

Contract: FSA26-EQU24.0, Equipment

Group: Stump Cutter

Item: 460, Vermeer, SC362, SC362

Description: Refer FSA Base Specifications PDF document.

Model Upgrade/Downgrade:

Zone	Rank	Vendor	Price	Build File	Options File
Western	Primary	Vermeer Southeast Sales	$32,136.00	Build	Options
Northern	Primary	Vermeer Southeast Sales	$32,136.00	Build	Options
Central	Primary	Vermeer Southeast Sales	$32,136.00	Build	Options
Southern	Primary	Vermeer Southeast Sales	$32,136.00	Build	Options

Bid Award

Contract: FSA26-EQU24.0, Equipment

Group: Sweeper: 3-Wheel Mechanical or Regenerative Air Sweeper

Item: 461, Elgin, Pelican NP, Pelican NP

Description: Refer FSA Base Specifications PDF document.

Model Upgrade/Downgrade:

Zone	Rank	Vendor	Price	Build File	Options File
Western	Primary	Environmental Products Group	$283,745.00	Build	Options
Northern	Primary	Environmental Products Group	$283,745.00	Build	Options
Central	Primary	Environmental Products Group	$283,745.00	Build	Options
Southern	Primary	Environmental Products Group	$283,745.00	Build	Options

Bid Award

Contract: FSA26-EQU24.0, Equipment

Group: Sweeper: 3-Wheel Mechanical or Regenerative Air Sweeper

Item: 462, Global, M3, M3

Description: Refer FSA Base Specifications PDF document.

Model Upgrade/Downgrade:

Zone	Rank	Vendor	Price	Build File	Options File
Western	Primary	Southern Sewer Equipment Sales	$267,518.00	Build	Options
Northern	Primary	Southern Sewer Equipment Sales	$267,518.00	Build	Options
Central	Primary	Southern Sewer Equipment Sales	$267,518.00	Build	Options
Southern	Primary	Southern Sewer Equipment Sales	$267,518.00	Build	Options

Bid Award

Contract: FSA26-EQU24.0, Equipment

Group: Sweeper: 3-Wheel Mechanical or Regenerative Air Sweeper

Item: 463, Global, R3, R3

Description: Refer FSA Base Specifications PDF document.

Model Upgrade/Downgrade:

Zone	Rank	Vendor	Price	Build File	Options File
Western	Primary	Southern Sewer Equipment Sales	$293,544.00	Build	Options
Northern	Primary	Southern Sewer Equipment Sales	$293,544.00	Build	Options
Central	Primary	Southern Sewer Equipment Sales	$293,544.00	Build	Options
Southern	Primary	Southern Sewer Equipment Sales	$293,544.00	Build	Options

Bid Award

Contract: FSA26-EQU24.0, Equipment

Group: Sweeper: Compact Air Sweeper - 2.3 cubic yd.

Item: 483, Ravo, R5, R5

Description: Refer FSA Base Specifications PDF document.

Model Upgrade/Downgrade:

Zone	Rank	Vendor	Price	Build File	Options File
Western	Primary	Sunbelt Waste Equipment LLC	$349,537.00	Build	Options
Northern	Primary	Sunbelt Waste Equipment LLC	$349,537.00	Build	Options
Central	Primary	Sunbelt Waste Equipment LLC	$349,537.00	Build	Options
Southern	Primary	Sunbelt Waste Equipment LLC	$349,537.00	Build	Options

Bid Award

Contract: FSA26-EQU24.0, Equipment

Group: Sweeper: Mechanical Broom Street Sweeper

Item: 466, Bucher Municipal, E35m, E35m

Description: Refer FSA Base Specifications PDF document.

Model Upgrade/Downgrade:

Zone	Rank	Vendor	Price	Build File	Options File
Western	Primary	Pat`s Pump & Blower	$445,000.00	Build	Options
Northern	Primary	Pat`s Pump & Blower	$445,000.00	Build	Options
Central	Primary	Pat`s Pump & Blower	$445,000.00	Build	Options
Southern	Primary	Pat`s Pump & Blower	$445,000.00	Build	Options

Bid Award

Contract: FSA26-EQU24.0, Equipment

Group: Sweeper: Mechanical Broom Street Sweeper

Item: 467, Elgin, Eagle, Eagle

Description: Refer FSA Base Specifications PDF document.

Model Upgrade/Downgrade:

Zone	Rank	Vendor	Price	Build File	Options File
Western	Primary	Environmental Products Group	$402,932.00	Build	Options
Northern	Primary	Environmental Products Group	$402,932.00	Build	Options
Central	Primary	Environmental Products Group	$402,932.00	Build	Options
Southern	Primary	Environmental Products Group	$402,932.00	Build	Options

Bid Award

Contract: FSA26-EQU24.0, Equipment

Group: Sweeper: Mechanical Broom Street Sweeper

Item: 470, Schwarze Industries, M6 Avalanche, M6 Avalanche

Description: Refer FSA Base Specifications PDF document.

Model Upgrade/Downgrade:

Zone	Rank	Vendor	Price	Build File	Options File
Western	Primary	Sunbelt Waste Equipment LLC	$433,896.00	Build	Options
Northern	Primary	Sunbelt Waste Equipment LLC	$433,896.00	Build	Options
Central	Primary	Sunbelt Waste Equipment LLC	$433,896.00	Build	Options
Southern	Primary	Sunbelt Waste Equipment LLC	$433,896.00	Build	Options

Bid Award

Contract: FSA26-EQU24.0, Equipment

Group: Sweeper: Regenerative Air Street Sweeper

Item: 471, Bucher Municipal, R65, R65

Description: Refer FSA Base Specifications PDF document.

Model Upgrade/Downgrade:

Zone	Rank	Vendor	Price	Build File	Options File
Western	Primary	Pat`s Pump & Blower	$410,000.00	Build	Options
Northern	Primary	Pat`s Pump & Blower	$410,000.00	Build	Options
Central	Primary	Pat`s Pump & Blower	$410,000.00	Build	Options
Southern	Primary	Pat`s Pump & Blower	$410,000.00	Build	Options

Bid Award

Contract: FSA26-EQU24.0, Equipment

Group: Sweeper: Regenerative Air Street Sweeper

Item: 472, Elgin, Regen X, Regen X

Description: Refer FSA Base Specifications PDF document.

Model Upgrade/Downgrade:

Zone	Rank	Vendor	Price	Build File	Options File
Western	Primary	Environmental Products Group	$315,932.00	Build	Options
Northern	Primary	Environmental Products Group	$315,932.00	Build	Options
Central	Primary	Environmental Products Group	$315,932.00	Build	Options
Southern	Primary	Environmental Products Group	$315,932.00	Build	Options

Bid Award

Contract: FSA26-EQU24.0, Equipment

Group: Sweeper: Regenerative Air Street Sweeper

Item: 473, Schwarze Industries, A7 Tornado, A7 Tornado

Description: Refer FSA Base Specifications PDF document.

Model Upgrade/Downgrade:

Zone	Rank	Vendor	Price	Build File	Options File
Western	Primary	Sunbelt Waste Equipment LLC	$353,514.00	Build	Options
Northern	Primary	Sunbelt Waste Equipment LLC	$353,514.00	Build	Options
Central	Primary	Sunbelt Waste Equipment LLC	$353,514.00	Build	Options
Southern	Primary	Sunbelt Waste Equipment LLC	$353,514.00	Build	Options

Bid Award

Contract: FSA26-EQU24.0, Equipment

Group: Sweeper: Regenerative Air Street Sweeper

Item: 474, Schwarze Industries, A8 Twister, A8 Twister

Description: Refer FSA Base Specifications PDF document.

Model Upgrade/Downgrade:

Zone	Rank	Vendor	Price	Build File	Options File
Western	Primary	Sunbelt Waste Equipment LLC	$447,457.00	Build	Options
Northern	Primary	Sunbelt Waste Equipment LLC	$447,457.00	Build	Options
Central	Primary	Sunbelt Waste Equipment LLC	$447,457.00	Build	Options
Southern	Primary	Sunbelt Waste Equipment LLC	$447,457.00	Build	Options

Bid Award

Contract: FSA26-EQU24.0, Equipment

Group: Sweeper: Regenerative Air Street Sweeper

Item: 475, Schwarze Industries, A9 Monsoon, A9 Monsoon

Description: Refer FSA Base Specifications PDF document.

Model Upgrade/Downgrade:

Zone	Rank	Vendor	Price	Build File	Options File
Western	Primary	Sunbelt Waste Equipment LLC	$383,501.00	Build	Options
Northern	Primary	Sunbelt Waste Equipment LLC	$383,501.00	Build	Options
Central	Primary	Sunbelt Waste Equipment LLC	$383,501.00	Build	Options
Southern	Primary	Sunbelt Waste Equipment LLC	$383,501.00	Build	Options

Bid Award

Contract: FSA26-EQU24.0, Equipment

Group: Sweeper: Regenerative Air Street Sweeper

Item: 476, Tymco, 600, 600

Description: Refer FSA Base Specifications PDF document.

Model Upgrade/Downgrade:

Zone	Rank	Vendor	Price	Build File	Options File
Western	Primary	Container Systems & Equipment Co., Inc.	$360,250.00	Build	Options
Northern	Primary	Container Systems & Equipment Co., Inc.	$360,250.00	Build	Options
Central	Primary	Container Systems & Equipment Co., Inc.	$360,250.00	Build	Options
Southern	Primary	Container Systems & Equipment Co., Inc.	$360,250.00	Build	Options

Bid Award

Contract: FSA26-EQU24.0, Equipment

Group: Sweeper: Self-Propelled Hydrostatic Broom

Item: 477, Broce, 350 Broom, 350 Broom

Description: Refer FSA Base Specifications PDF document.

Model Upgrade/Downgrade:

Zone	Rank	Vendor	Price	Build File	Options File
Western	Primary	Cowin Equipment Company	$81,628.00	Build	Options
Northern	Primary	Alta Construction Equipment Florida, LLC	$80,000.00	Build	
Central	Primary	Alta Construction Equipment Florida, LLC	$80,000.00	Build	
Southern	Primary	Alta Construction Equipment Florida, LLC	$80,000.00	Build	

Bid Award

Contract: FSA26-EQU24.0, Equipment

Group: Sweeper: Self-Propelled Hydrostatic Broom

Item: 478, LeeBoy, RB-50, RB-50

Description: Refer FSA Base Specifications PDF document.

Model Upgrade/Downgrade:

Zone	Rank	Vendor	Price	Build File	Options File
Western	Primary	Dobbs Equipment, LLC	$87,325.00	Build	Options
Northern	Primary	Dobbs Equipment, LLC	$87,325.00	Build	Options
Central	Primary	Dobbs Equipment, LLC	$87,325.00	Build	Options
Southern	Primary	Dobbs Equipment, LLC	$87,325.00	Build	Options

Bid Award

Contract: FSA26-EQU24.0, Equipment

Group: Sweeper: Self-Propelled Hydrostatic Broom

Item: 481, Weiler, B400, B400

Description: Refer FSA Base Specifications PDF document.

Model Upgrade/Downgrade:

Zone	Rank	Vendor	Price	Build File	Options File
Western					
Northern					
Central					
Southern	Primary	Kelly Tractor Co	$220,495.00	Build	Options

Bid Award

Contract: FSA26-EQU24.0, Equipment

Group: Sweeper: Vacuum Street Sweeper

Item: 484, Scarab, Magnum, U72

Description: Refer FSA Base Specifications PDF document.

Model Upgrade/Downgrade:

Zone	Rank	Vendor	Price	Build File	Options File
Western	Primary	Evervac Equipment	$274,825.00	Build	Options
Northern	Primary	Evervac Equipment	$274,825.00	Build	Options
Central	Primary	Evervac Equipment	$274,825.00	Build	Options
Southern	Primary	Evervac Equipment	$274,825.00	Build	Options

Bid Award

Contract: FSA26-EQU24.0, Equipment

Group: Sweeper: Vacuum Street Sweeper

Item: 664, Elgin, Whirlwind, Whirlwind

Description: Refer FSA Base Specifications PDF document.

Model Upgrade/Downgrade:

Zone	Rank	Vendor	Price	Build File	Options File
Western	Primary	Environmental Products Group	$405,364.00	Build	Options
Northern	Primary	Environmental Products Group	$405,364.00	Build	Options
Central	Primary	Environmental Products Group	$405,364.00	Build	Options
Southern	Primary	Environmental Products Group	$405,364.00	Build	Options

Bid Award

Contract: FSA26-EQU24.0, Equipment

Group: Sweeper: Walk Behind Floor Sweeper/Scrubber

Item: 485, PowerBoss, Phoenix, 26

Description: Refer FSA Base Specifications PDF document.

Model Upgrade/Downgrade:

Zone	Rank	Vendor	Price	Build File	Options File
Western	Primary	Southern States ToyotaLift	$12,195.00	Build	Options
Northern	Primary	Southern States ToyotaLift	$12,195.00	Build	Options
Central	Primary	Southern States ToyotaLift	$12,195.00	Build	Options
Southern	Primary	Southern States ToyotaLift	$12,195.00	Build	Options

Bid Award

Contract: FSA26-EQU24.0, Equipment

Group: Sweeper: Walk Behind Floor Sweeper/Scrubber

Item: 665, Advance by Nilfisk, SC750 26D, 56112395

Description: Refer FSA Base Specifications PDF document.

Model Upgrade/Downgrade:

Zone	Rank	Vendor	Price	Build File	Options File
Western	Primary	National Lift Truck Service	$12,142.00	Build	Options
	Alternate	Ring Power Corporation	$15,921.00	Build	Options
	Alternate	Federal Contracts LLC DBA Federal Contracts Company	$16,569.00	Build	Options
Northern	Primary	National Lift Truck Service	$12,142.00	Build	Options
	Alternate	Ring Power Corporation	$15,921.00	Build	Options
	Alternate	Federal Contracts LLC DBA Federal Contracts Company	$16,569.00	Build	Options
Central	Primary	National Lift Truck Service	$12,142.00	Build	Options
	Alternate	Ring Power Corporation	$15,921.00	Build	Options
	Alternate	Federal Contracts LLC DBA Federal Contracts Company	$16,569.00	Build	Options
Southern	Primary	National Lift Truck Service	$12,142.00	Build	Options
	Alternate	Federal Contracts LLC DBA Federal Contracts Company	$16,569.00	Build	Options

Bid Award

Contract: FSA26-EQU24.0, Equipment

Group: Sweeper: Walk Behind Floor Sweeper/Scrubber

Item: 666, Kärcher, BD 70/75 W BB Classic, BD 70/75 W BB Classic

Description: Refer FSA Base Specifications PDF document.

Model Upgrade/Downgrade:

Zone	Rank	Vendor	Price	Build File	Options File
Western	Primary	Federal Contracts LLC DBA Federal Contracts Company	$10,171.00	Build	Options
Northern	Primary	Federal Contracts LLC DBA Federal Contracts Company	$10,171.00	Build	Options
Central	Primary	Federal Contracts LLC DBA Federal Contracts Company	$10,171.00	Build	Options
Southern	Primary	Federal Contracts LLC DBA Federal Contracts Company	$10,171.00	Build	Options

Bid Award

Contract: FSA26-EQU24.0, Equipment

Group: Tactical Vehicle: Skid Steer Mounted (The Rook)

Item: 486, Caterpillar, 275 with Rook Option, 275 with Rook Option

Description: Refer FSA Base Specifications PDF document.

Model Upgrade/Downgrade:

Zone	Rank	Vendor	Price	Build File	Options File
Western	Primary	Ring Power Corporation	$475,000.00	Build	Options
Northern	Primary	Ring Power Corporation	$475,000.00	Build	Options
Central	Primary	Ring Power Corporation	$475,000.00	Build	Options
Southern	Primary	Ring Power Corporation	$475,000.00	Build	Options

Bid Award

Contract: FSA26-EQU24.0, Equipment

Group: Tool Carrier: Hydrostatic Drive

Item: 487, Alamo Industrial, Mantis, 155B

Description: Refer FSA Base Specifications PDF document.

Model Upgrade/Downgrade:

Zone	Rank	Vendor	Price	Build File	Options File
Western	Primary	Alamo Group Municipal Mowing Solutions LLC	$205,214.00	Build	Options
Northern	Primary	Alamo Group Municipal Mowing Solutions LLC	$205,214.00	Build	Options
Central	Primary	Alamo Group Municipal Mowing Solutions LLC	$205,214.00	Build	Options
Southern	Primary	Alamo Group Municipal Mowing Solutions LLC	$205,214.00	Build	Options

Bid Award

Contract: FSA26-EQU24.0, Equipment

Group: Tool Carrier: Hydrostatic Drive

Item: 488, Diamond Mowers, DM360, DM360

Description: Refer FSA Base Specifications PDF document.

Model Upgrade/Downgrade:

Zone	Rank	Vendor	Price	Build File	Options File
Western	Primary	Ring Power Corporation	$262,968.00	Build	Options
Northern	Primary	Ring Power Corporation	$262,968.00	Build	Options
Central	Primary Alternate	Kelly Tractor Co Ring Power Corporation	$241,500.00 $262,968.00	Build Build	Options Options
Southern	Primary	Kelly Tractor Co	$241,500.00	Build	Options

Bid Award

Contract: FSA26-EQU24.0, Equipment

Group: Tool Carrier: Hydrostatic Drive

Item: 489, Energreen America, Kommunal, Kommunal

Description: Refer FSA Base Specifications PDF document.

Model Upgrade/Downgrade:

Zone	Rank	Vendor	Price	Build File	Options File
Western	Primary	Everglades Equipment Group	$280,000.00	Build	Options
Northern	Primary	Everglades Equipment Group	$280,000.00	Build	Options
Central	Primary	Everglades Equipment Group	$280,000.00	Build	Options
Southern	Primary	Everglades Equipment Group	$280,000.00	Build	Options

Bid Award

Contract: FSA26-EQU24.0, Equipment

Group: Tool Carrier: Hydrostatic Drive

Item: 490, MowerMax, Tool Carrier, MMB22

Description: Refer FSA Base Specifications PDF document.

Model Upgrade/Downgrade:

Zone	Rank	Vendor	Price	Build File	Options File
Western	Primary	MowerMax Equipment Co.	$214,636.00	Build	
Northern	Primary	MowerMax Equipment Co.	$214,636.00	Build	
Central	Primary	MowerMax Equipment Co.	$214,636.00	Build	
Southern	Primary	MowerMax Equipment Co.	$214,636.00	Build	

Bid Award

Contract: FSA26-EQU24.0, Equipment

Group: Tractor: Agriculture Tractor - 4x2

Item: 492, John Deere, 5105M, 5105M

Description: Refer FSA Base Specifications PDF document.

Model Upgrade/Downgrade:

Zone	Rank	Vendor	Price	Build File	Options File
Western	Primary	Everglades Equipment Group	$73,600.00	Build	Options
Northern	Primary	Everglades Equipment Group	$73,600.00	Build	Options
Central	Primary	Everglades Equipment Group	$73,600.00	Build	Options
Southern	Primary	Everglades Equipment Group	$73,600.00	Build	Options

Bid Award

Contract: FSA26-EQU24.0, Equipment

Group: Tractor: Agriculture Tractor - 4x2

Item: 493, Kubota, M5-111HF-1, M5-111HF-1

Description: Refer FSA Base Specifications PDF document.

Model Upgrade/Downgrade:

Zone	Rank	Vendor	Price	Build File	Options File
Western	Primary	Creel Tractor Company	$50,380.00	Build	Options
Northern	Primary Alternate	Creel Tractor Company Florida Coast Equipment, Inc.	$50,130.00 $51,097.00	Build Build	Options Options
Central	Primary Alternate	Creel Tractor Company Florida Coast Equipment, Inc.	$49,880.00 $51,097.00	Build Build	Options Options
Southern	Primary Alternate	Creel Tractor Company Florida Coast Equipment, Inc.	$49,480.00 $51,097.00	Build Build	Options Options

Bid Award

Contract: FSA26-EQU24.0, Equipment

Group: Tractor: Agriculture Tractor - 4x2

Item: 494, Massey Ferguson, MF4709, MF4709

Description: Refer FSA Base Specifications PDF document.

Model Upgrade/Downgrade:

Zone	Rank	Vendor	Price	Build File	Options File
Western	Primary	OCALA TRACTOR, LCC	$44,400.00	Build	Options
	Alternate	Ring Power Corporation	$53,731.00	Build	Options
Northern	Primary	OCALA TRACTOR, LCC	$43,400.00	Build	Options
	Alternate	Ring Power Corporation	$53,731.00	Build	Options
Central	Primary	OCALA TRACTOR, LCC	$43,400.00	Build	Options
	Alternate	Ring Power Corporation	$53,731.00	Build	Options
	Alternate	Kelly Tractor Co	$53,850.00	Build	Options
Southern	Primary	OCALA TRACTOR, LCC	$44,400.00	Build	Options
	Alternate	Kelly Tractor Co	$53,850.00	Build	Options

Bid Award

Contract: FSA26-EQU24.0, Equipment

Group: Tractor: Agriculture Tractor - 4x2

Item: 495, New Holland, Powerstar, 100

Description: Refer FSA Base Specifications PDF document.

Model Upgrade/Downgrade:

Zone	Rank	Vendor	Price	Build File	Options File
Western	Primary Alternate	Love Power Equipment, Inc OCALA TRACTOR, LCC	$77,500.00 $89,490.00	Build Build	Options Options
Northern	Primary Alternate	Love Power Equipment, Inc OCALA TRACTOR, LCC	$75,500.00 $89,490.00	Build Build	Options Options
Central	Primary Alternate	Love Power Equipment, Inc OCALA TRACTOR, LCC	$75,500.00 $89,490.00	Build Build	Options Options
Southern	Primary Alternate	Love Power Equipment, Inc OCALA TRACTOR, LCC	$77,500.00 $89,490.00	Build Build	Options Options

Bid Award

Contract: FSA26-EQU24.0, Equipment

Group: Tractor: Agriculture Tractor - 4x2

Item: 496, New Holland, PowerStar Series, PowerStar 100

Description: Refer FSA Base Specifications PDF document.

Model Upgrade/Downgrade:

Zone	Rank	Vendor	Price	Build File	Options File
Western	Primary Alternate	Love Power Equipment, Inc OCALA TRACTOR, LCC	$77,500.00 $89,490.00	Build Build	Options Options
Northern	Primary Alternate	Love Power Equipment, Inc OCALA TRACTOR, LCC	$75,500.00 $89,490.00	Build Build	Options Options
Central	Primary Alternate	Love Power Equipment, Inc OCALA TRACTOR, LCC	$75,500.00 $89,490.00	Build Build	Options Options
Southern	Primary Alternate	Love Power Equipment, Inc OCALA TRACTOR, LCC	$77,500.00 $89,490.00	Build Build	Options Options

Bid Award

Contract: FSA26-EQU24.0, Equipment

Group: Tractor: Compact Articulating Tractor - AWD

Item: 497, Avant, 528, 528

Description: Refer FSA Base Specifications PDF document.

Model Upgrade/Downgrade:

Zone	Rank	Vendor	Price	Build File	Options File
Western	Primary	Alta Construction Equipment Florida, LLC	$50,000.00	Build	Options
Northern	Primary	Alta Construction Equipment Florida, LLC	$50,000.00	Build	Options
Central	Primary	Alta Construction Equipment Florida, LLC	$50,000.00	Build	Options
Southern	Primary	Alta Construction Equipment Florida, LLC	$50,000.00	Build	Options

Bid Award

Contract: FSA26-EQU24.0, Equipment

Group: Tractor: Small Agriculture Tractor - 4x4

Item: 498, Bad Boy, 40 Series, 4035

Description: Refer FSA Base Specifications PDF document.

Model Upgrade/Downgrade:

Zone	Rank	Vendor	Price	Build File	Options File
Western	Primary	Love Power Equipment, Inc	$26,900.00	Build	Options
Northern	Primary	Love Power Equipment, Inc	$26,500.00	Build	Options
Central	Primary	Love Power Equipment, Inc	$26,500.00	Build	Options
Southern	Primary	Love Power Equipment, Inc	$26,900.00	Build	Options

Bid Award

Contract: FSA26-EQU24.0, Equipment

Group: Tractor: Small Agriculture Tractor - 4x4

Item: 501, John Deere, 3035D, 3035D

Description: Refer FSA Base Specifications PDF document.

Model Upgrade/Downgrade:

Zone	Rank	Vendor	Price	Build File	Options File
Western	Primary	Everglades Equipment Group	$22,400.00	Build	Options
Northern	Primary	Everglades Equipment Group	$22,400.00	Build	Options
Central	Primary	Everglades Equipment Group	$22,400.00	Build	Options
Southern	Primary	Everglades Equipment Group	$22,400.00	Build	Options

Bid Award

Contract: FSA26-EQU24.0, Equipment

Group: Tractor: Small Agriculture Tractor - 4x4

Item: 502, Kioti, CK3520, CK3520

Description: Refer FSA Base Specifications PDF document.

Model Upgrade/Downgrade:

Zone	Rank	Vendor	Price	Build File	Options File
Western	Primary	OCALA TRACTOR, LCC	$19,900.00	Build	Options
Northern	Primary	OCALA TRACTOR, LCC	$19,500.00	Build	Options
Central	Primary	OCALA TRACTOR, LCC	$19,500.00	Build	Options
Southern	Primary	OCALA TRACTOR, LCC	$20,100.00	Build	Options

Bid Award

Contract: FSA26-EQU24.0, Equipment

Group: Tractor: Small Agriculture Tractor - 4x4

Item: 503, Kubota, L3902 DT, L3902 DT

Description: Refer FSA Base Specifications PDF document.

Model Upgrade/Downgrade:

Zone	Rank	Vendor	Price	Build File	Options File
Western	Primary	Creel Tractor Company	$22,980.00	Build	Options
Northern	Primary Alternate	Creel Tractor Company Florida Coast Equipment, Inc.	$22,780.00 $23,127.00	Build Build	Options Options
Central	Primary Alternate	Creel Tractor Company Florida Coast Equipment, Inc.	$22,530.00 $23,127.00	Build Build	Options Options
Southern	Primary Alternate	Creel Tractor Company Florida Coast Equipment, Inc.	$21,980.00 $23,127.00	Build Build	Options Options

Bid Award

Contract: FSA26-EQU24.0, Equipment

Group: Tractor: Small Agriculture Tractor - 4x4

Item: 504, Massey Ferguson, MF1E.35, MF1E.35

Description: Refer FSA Base Specifications PDF document.

Model Upgrade/Downgrade:

Zone	Rank	Vendor	Price	Build File	Options File
Western	Primary	OCALA TRACTOR, LCC	$19,500.00	Build	Options
	Alternate	Kelly Tractor Co	$25,450.00	Build	Options
Northern	Primary	OCALA TRACTOR, LCC	$19,200.00	Build	Options
	Alternate	Kelly Tractor Co	$25,450.00	Build	Options
Central	Primary	OCALA TRACTOR, LCC	$19,200.00	Build	Options
	Alternate	Kelly Tractor Co	$24,450.00	Build	Options
Southern	Primary	OCALA TRACTOR, LCC	$19,700.00	Build	Options
	Alternate	Kelly Tractor Co	$24,450.00	Build	Options

Bid Award

Contract: FSA26-EQU24.0, Equipment

Group: Tractor: Small Agriculture Tractor - 4x4

Item: 505, New Holland, Boomer, 35

Description: Refer FSA Base Specifications PDF document.

Model Upgrade/Downgrade:

Zone	Rank	Vendor	Price	Build File	Options File
Western	Primary Primary	Love Power Equipment, Inc OCALA TRACTOR, LCC	$29,900.00 $29,900.00	Build Build	Options Options
Northern	Primary Alternate	Love Power Equipment, Inc OCALA TRACTOR, LCC	$29,400.00 $29,500.00	Build Build	Options Options
Central	Primary Alternate	Love Power Equipment, Inc OCALA TRACTOR, LCC	$29,400.00 $29,500.00	Build Build	Options Options
Southern	Primary Primary	Love Power Equipment, Inc OCALA TRACTOR, LCC	$29,900.00 $29,900.00	Build Build	Options Options

Bid Award

Contract: FSA26-EQU24.0, Equipment

Group: Tractor: Small Agriculture Tractor - 4x4

Item: 506, New Holland, Boomer Compact, Boomer 35

Description: Refer FSA Base Specifications PDF document.

Model Upgrade/Downgrade:

Zone	Rank	Vendor	Price	Build File	Options File
Western	Primary	Love Power Equipment, Inc	$29,900.00	Build	Options
	Primary	OCALA TRACTOR, LCC	$29,900.00	Build	Options
Northern	Primary	Love Power Equipment, Inc	$29,400.00	Build	Options
	Alternate	OCALA TRACTOR, LCC	$29,500.00	Build	Options
Central	Primary	Love Power Equipment, Inc	$29,400.00	Build	Options
	Alternate	OCALA TRACTOR, LCC	$29,500.00	Build	Options
Southern	Primary	Love Power Equipment, Inc	$29,900.00	Build	Options
	Primary	OCALA TRACTOR, LCC	$29,900.00	Build	Options

Bid Award

Contract: FSA26-EQU24.0, Equipment

Group: Tractor: Tractor with Boom Mower - 4x4

Item: 508, John Deere, 6M125 Alamo Industrial Mower, 6M125

Description: Refer FSA Base Specifications PDF document.

Model Upgrade/Downgrade:

Zone	Rank	Vendor	Price	Build File	Options File
Western	Primary	Alamo Group Municipal Mowing Solutions LLC	$247,048.00	Build	Options
Northern	Primary	Alamo Group Municipal Mowing Solutions LLC	$247,048.00	Build	Options
Central	Primary	Alamo Group Municipal Mowing Solutions LLC	$247,048.00	Build	Options
Southern	Primary	Alamo Group Municipal Mowing Solutions LLC	$247,048.00	Build	Options

Bid Award

Contract: FSA26-EQU24.0, Equipment

Group: Tractor: Tractor with Boom Mower - 4x4

Item: 509, John Deere, 6M125 with Tiger Bengal Boom Mower, 6M125

Description: Refer FSA Base Specifications PDF document.

Model Upgrade/Downgrade:

Zone	Rank	Vendor	Price	Build File	Options File
Western	Primary	Alamo Group Municipal Mowing Solutions LLC	$248,294.00	Build	Options
Northern	Primary	Alamo Group Municipal Mowing Solutions LLC	$248,294.00	Build	Options
Central	Primary	Alamo Group Municipal Mowing Solutions LLC	$248,294.00	Build	Options
Southern	Primary	Alamo Group Municipal Mowing Solutions LLC	$248,294.00	Build	Options

Bid Award

Contract: FSA26-EQU24.0, Equipment

Group: Tractor: Tractor with Boom Mower - 4x4

Item: 510, Kubota, M6S-111 with Terrain King KB2300 Boom Mower, M6S-111

Description: Refer FSA Base Specifications PDF document.

Model Upgrade/Downgrade:

Zone	Rank	Vendor	Price	Build File	Options File
Western	Primary	Alamo Group Municipal Mowing Solutions LLC	$198,092.00	Build	Options
Northern	Primary	Alamo Group Municipal Mowing Solutions LLC	$198,092.00	Build	Options
Central	Primary	Alamo Group Municipal Mowing Solutions LLC	$198,092.00	Build	Options
Southern	Primary	Alamo Group Municipal Mowing Solutions LLC	$198,092.00	Build	Options

Bid Award

Contract: FSA26-EQU24.0, Equipment

Group: Tractor: Tractor with Boom Mower - 4x4

Item: 511, Massey Ferguson, 6S.145 with Diamond Boom Mower, 6S.145

Description: Refer FSA Base Specifications PDF document.

Model Upgrade/Downgrade:

Zone	Rank	Vendor	Price	Build File	Options File
Western	Primary	Ring Power Corporation	$252,207.00	Build	Options
Northern	Primary	Ring Power Corporation	$252,207.00	Build	Options
Central	Primary Alternate	Kelly Tractor Co Ring Power Corporation	$236,350.00 $252,207.00	Build Build	Options Options
Southern	Primary	Kelly Tractor Co	$236,350.00	Build	Options

Bid Award

Contract: FSA26-EQU24.0, Equipment

Group: Trailer: Container Chassis Trailer - 73,900 lbs. GVWR

Item: 512, Pitts Trailers, SC40P Chassis Trailer, SC40P

Description: Refer FSA Base Specifications PDF document.

Model Upgrade/Downgrade:

Zone	Rank	Vendor	Price	Build File	Options File
Western	Primary	Nationwide Haul LLC	$36,500.00	Build	Options
Northern	Primary	Nationwide Haul LLC	$36,500.00	Build	Options
Central	Primary	Nationwide Haul LLC	$36,500.00	Build	Options
Southern	Primary	Nationwide Haul LLC	$36,500.00	Build	Options

Bid Award

Contract: FSA26-EQU24.0, Equipment

Group: Trailer: Deck Over Equipment Trailer - 40,000 lbs. GVWR

Item: 513, Behnke, Super Duty Flatbed Trailer, FB8X25SDPT-40L

Description: Refer FSA Base Specifications PDF document.

Model Upgrade/Downgrade:

Zone	Rank	Vendor	Price	Build File	Options File
Western	Primary	RIGHT TRAILERS, INC.	$37,014.00	Build	Options
Northern	Primary	RIGHT TRAILERS, INC.	$36,614.00	Build	Options
Central	Primary	RIGHT TRAILERS, INC.	$36,314.00	Build	Options
Southern	Primary	RIGHT TRAILERS, INC.	$36,614.00	Build	Options

Bid Award

Contract: FSA26-EQU24.0, Equipment

Group: Trailer: Deck Over Equipment Trailer - 40,000 lbs. GVWR

Item: 514, Big Tex, 4XPH-20+5, 4XPH-20+5

Description: Refer FSA Base Specifications PDF document.

Model Upgrade/Downgrade:

Zone	Rank	Vendor	Price	Build File	Options File
Western	Primary	Texas Trailers Sales and Service	$39,273.00	Build	Options
Northern	Primary	Texas Trailers Sales and Service	$38,623.00	Build	Options
Central	Primary	Texas Trailers Sales and Service	$38,873.00	Build	Options
Southern	Primary	Texas Trailers Sales and Service	$39,373.00	Build	Options

Bid Award

Contract: FSA26-EQU24.0, Equipment

Group: Trailer: Deck Over Equipment Trailer - 40,000 lbs. GVWR

Item: 515, EAGER BEAVER, Eager Beaver 20-XPT Trailer, 20XPT

Description: Refer FSA Base Specifications PDF document.

Model Upgrade/Downgrade:

Zone	Rank	Vendor	Price	Build File	Options File
Western	Primary	Dobbs Equipment, LLC	$32,250.00	Build	Options
Northern	Primary	Dobbs Equipment, LLC	$32,250.00	Build	Options
Central	Primary	Dobbs Equipment, LLC	$32,250.00	Build	Options
Southern	Primary	Dobbs Equipment, LLC	$32,250.00	Build	Options

Bid Award

Contract: FSA26-EQU24.0, Equipment

Group: Trailer: Deck Over Equipment Trailer - 40,000 lbs. GVWR

Item: 516, Econoline, 24 Ton Deckover Dovetail, DP2425DA

Description: Refer FSA Base Specifications PDF document.

Model Upgrade/Downgrade:

Zone	Rank	Vendor	Price	Build File	Options File
Western	Primary	DeLand Truck Center, Inc.	$29,461.00	Build	Options
Northern	Primary	DeLand Truck Center, Inc.	$29,661.00	Build	Options
Central	Primary	DeLand Truck Center, Inc.	$29,461.00	Build	Options
Southern	Primary	DeLand Truck Center, Inc.	$29,561.00	Build	Options

Bid Award

Contract: FSA26-EQU24.0, Equipment

Group: Trailer: Deck Over Equipment Trailer - 40,000 lbs. GVWR

Item: 518, Interstate, 40DLA, 40DLA

Description: Refer FSA Base Specifications PDF document.

Model Upgrade/Downgrade:

Zone	Rank	Vendor	Price	Build File	Options File
Western	Primary	Dobbs Equipment, LLC	$27,975.00	Build	Options
Northern	Primary	Dobbs Equipment, LLC	$27,975.00	Build	Options
Central	Primary Alternate	Kelly Tractor Co Dobbs Equipment, LLC	$25,990.00 $27,975.00	Build Build	Options Options
Southern	Primary Alternate	Kelly Tractor Co Dobbs Equipment, LLC	$25,990.00 $27,975.00	Build Build	Options Options

Bid Award

Contract: FSA26-EQU24.0, Equipment

Group: Trailer: Deck Over Equipment Trailer - 40,000 lbs. GVWR

Item: 519, Pitts Trailers, TA-20, TA-20

Description: Refer FSA Base Specifications PDF document.

Model Upgrade/Downgrade:

Zone	Rank	Vendor	Price	Build File	Options File
Western	Primary	Nationwide Haul LLC	$31,995.00	Build	Options
Northern	Primary	Nationwide Haul LLC	$31,995.00	Build	Options
Central	Primary	Nationwide Haul LLC	$31,995.00	Build	Options
Southern	Primary	Nationwide Haul LLC	$31,995.00	Build	Options

Bid Award

Contract: FSA26-EQU24.0, Equipment

Group: Trailer: Deck Over Equipment Trailer - 40,000 lbs. GVWR

Item: 521, Texas Trailers, FB2540GVB, FB2540GVB

Description: Refer FSA Base Specifications PDF document.

Model Upgrade/Downgrade:

Zone	Rank	Vendor	Price	Build File	Options File
Western	Primary	Texas Trailers Sales and Service	$35,800.00	Build	Options
Northern	Primary	Texas Trailers Sales and Service	$34,800.00	Build	Options
Central	Primary	Texas Trailers Sales and Service	$35,300.00	Build	Options
Southern	Primary	Texas Trailers Sales and Service	$35,800.00	Build	Options

Bid Award

Contract: FSA26-EQU24.0, Equipment

Group: Trailer: Deck Over Equipment Trailer - 40,000 lbs. GVWR

Item: 522, Trail King, TK40LP, TK40LP

Description: Refer FSA Base Specifications PDF document.

Model Upgrade/Downgrade:

Zone	Rank	Vendor	Price	Build File	Options File
Western	Primary	Alta Construction Equipment Florida, LLC	$35,000.00	Build	Options
Northern	Primary	Alta Construction Equipment Florida, LLC	$35,000.00	Build	Options
Central	Primary	Alta Construction Equipment Florida, LLC	$35,000.00	Build	Options
Southern	Primary	Alta Construction Equipment Florida, LLC	$35,000.00	Build	Options

Bid Award

Contract: FSA26-EQU24.0, Equipment

Group: Trailer: Deck Over Equipment Trailer - 40,000 lbs. GVWR

Item: 667, Towmaster, T-40LP, T-40LP

Description: Refer FSA Base Specifications PDF document.

Model Upgrade/Downgrade:

Zone	Rank	Vendor	Price	Build File	Options File
Western	Primary	Ring Power Corporation	$38,859.00	Build	Options
Northern	Primary	Ring Power Corporation	$38,859.00	Build	Options
Central	Primary	Ring Power Corporation	$38,859.00	Build	Options
Southern					

Bid Award

Contract: FSA26-EQU24.0, Equipment

Group: Trailer: Deck Over Flatbed Trailer - 14,000 lbs. GVWR

Item: 523, Big Tex, 14PH-25BK+5, 14PH-25BK+5

Description: Refer FSA Base Specifications PDF document.

Model Upgrade/Downgrade:

Zone	Rank	Vendor	Price	Build File	Options File
Western	Primary	Texas Trailers Sales and Service	$10,133.00	Build	Options
Northern	Primary	Texas Trailers Sales and Service	$9,483.00	Build	Options
Central	Primary	Texas Trailers Sales and Service	$9,733.00	Build	Options
Southern	Primary	Texas Trailers Sales and Service	$10,233.00	Build	Options

Bid Award

Contract: FSA26-EQU24.0, Equipment

Group: Trailer: Deck Over Flatbed Trailer - 14,000 lbs. GVWR

Item: 524, Bigfoot Trailers, Super Monster 17.5K Deckover Trailer, Super Monster 17.5K

Description: Refer FSA Base Specifications PDF document.

Model Upgrade/Downgrade:

Zone	Rank	Vendor	Price	Build File	Options File
Western	Primary	RIGHT TRAILERS, INC.	$14,250.00	Build	Options
Northern	Primary	RIGHT TRAILERS, INC.	$13,950.00	Build	Options
Central	Primary	RIGHT TRAILERS, INC.	$13,650.00	Build	Options
Southern	Primary	RIGHT TRAILERS, INC.	$13,950.00	Build	Options

Bid Award

Contract: FSA26-EQU24.0, Equipment

Group: Trailer: Deck Over Flatbed Trailer - 14,000 lbs. GVWR

Item: 525, Down 2 Earth, 102” X 26′ Deckover 16k GVWR, DTE826DO8B

Description: Refer FSA Base Specifications PDF document.

Model Upgrade/Downgrade:

Zone	Rank	Vendor	Price	Build File	Options File
Western	Primary	Love Power Equipment, Inc	$12,565.00	Build	Options
Northern	Primary	Love Power Equipment, Inc	$12,265.00	Build	Options
Central	Primary	Love Power Equipment, Inc	$12,265.00	Build	Options
Southern	Primary	Love Power Equipment, Inc	$12,565.00	Build	Options

Bid Award

Contract: FSA26-EQU24.0, Equipment

Group: Trailer: Deck Over Flatbed Trailer - 14,000 lbs. GVWR

Item: 526, Econoline, BP0725DE, BP0725DE

Description: Refer FSA Base Specifications PDF document.

Model Upgrade/Downgrade:

Zone	Rank	Vendor	Price	Build File	Options File
Western	Primary	DeLand Truck Center, Inc.	$12,676.00	Build	Options
Northern	Primary	DeLand Truck Center, Inc.	$12,576.00	Build	Options
Central	Primary	DeLand Truck Center, Inc.	$12,476.00	Build	Options
Southern	Primary	DeLand Truck Center, Inc.	$12,676.00	Build	Options

Bid Award

Contract: FSA26-EQU24.0, Equipment

Group: Trailer: Deck Over Flatbed Trailer - 14,000 lbs. GVWR

Item: 527, Felling, FT-14-2, FT-14-2

Description: Refer FSA Base Specifications PDF document.

Model Upgrade/Downgrade:

Zone	Rank	Vendor	Price	Build File	Options File
Western	Primary	Federal Contracts LLC DBA Federal Contracts Company	$22,301.00	Build	Options
Northern	Primary	Federal Contracts LLC DBA Federal Contracts Company	$22,301.00	Build	Options
Central	Primary	Federal Contracts LLC DBA Federal Contracts Company	$22,301.00	Build	Options
Southern	Primary	Kelly Tractor Co	$21,945.00	Build	Options

Bid Award

Contract: FSA26-EQU24.0, Equipment

Group: Trailer: Deck Over Flatbed Trailer - 14,000 lbs. GVWR

Item: 528, Interstate, 14BST, 14BST

Description: Refer FSA Base Specifications PDF document.

Model Upgrade/Downgrade:

Zone	Rank	Vendor	Price	Build File	Options File
Western					
Northern					
Central	Primary	Kelly Tractor Co	$19,450.00	Build	Options
Southern	Primary	Kelly Tractor Co	$19,250.00	Build	Options

Bid Award

Contract: FSA26-EQU24.0, Equipment

Group: Trailer: Deck Over Flatbed Trailer - 14,000 lbs. GVWR

Item: 529, Maxx-D, I-Beam Deckover Trailer, DOX-16K

Description: Refer FSA Base Specifications PDF document.

Model Upgrade/Downgrade:

Zone	Rank	Vendor	Price	Build File	Options File
Western	Primary	RIGHT TRAILERS, INC.	$12,077.00	Build	Options
Northern	Primary	RIGHT TRAILERS, INC.	$11,777.00	Build	Options
Central	Primary	RIGHT TRAILERS, INC.	$11,477.00	Build	Options
Southern	Primary	RIGHT TRAILERS, INC.	$11,777.00	Build	Options

Bid Award

Contract: FSA26-EQU24.0, Equipment

Group: Trailer: Deck Over Flatbed Trailer - 14,000 lbs. GVWR

Item: 532, Texas Trailers, FB3014GVB, FB3014GVB

Description: Refer FSA Base Specifications PDF document.

Model Upgrade/Downgrade:

Zone	Rank	Vendor	Price	Build File	Options File
Western	Primary	Texas Trailers Sales and Service	$10,890.00	Build	Options
Northern	Primary	Texas Trailers Sales and Service	$10,240.00	Build	Options
Central	Primary	Texas Trailers Sales and Service	$10,490.00	Build	Options
Southern	Primary	Texas Trailers Sales and Service	$10,990.00	Build	Options

Bid Award

Contract: FSA26-EQU24.0, Equipment

Group: Trailer: Deck Over Flatbed Trailer - 14,000 lbs. GVWR

Item: 533, Towmaster, T-16LP, T-16LP

Description: Refer FSA Base Specifications PDF document.

Model Upgrade/Downgrade:

Zone	Rank	Vendor	Price	Build File	Options File
Western	Primary	Ring Power Corporation	$29,125.00	Build	Options
Northern	Primary	Ring Power Corporation	$29,125.00	Build	Options
Central	Primary	Ring Power Corporation	$29,125.00	Build	Options
Southern	Primary	Kelly Tractor Co	$28,300.00	Build	Options

Bid Award

Contract: FSA26-EQU24.0, Equipment

Group: Trailer: Deck Over Flatbed Trailer - 14,000 lbs. GVWR

Item: 534, Trail King, TK20LP, TK20LP

Description: Refer FSA Base Specifications PDF document.

Model Upgrade/Downgrade:

Zone	Rank	Vendor	Price	Build File	Options File
Western	Primary	Alta Construction Equipment Florida, LLC	$31,000.00	Build	Options
Northern	Primary	Alta Construction Equipment Florida, LLC	$31,000.00	Build	Options
Central	Primary	Alta Construction Equipment Florida, LLC	$31,000.00	Build	Options
Southern	Primary	Alta Construction Equipment Florida, LLC	$31,000.00	Build	Options

Bid Award

Contract: FSA26-EQU24.0, Equipment

Group: Trailer: Deck Over Flatbed Trailer - 14,000 lbs. GVWR

Item: 668, Kaufman, 17,000 GVWR Deluxe Flatbed Trailer – 22ft, FP-8K-22D

Description: Refer FSA Base Specifications PDF document.

Model Upgrade/Downgrade:

Zone	Rank	Vendor	Price	Build File	Options File
Western	Primary	National Equipment Dealers, LLC	$11,490.00	Build	Options
Northern	Primary	National Equipment Dealers, LLC	$11,490.00	Build	Options
Central	Primary	National Equipment Dealers, LLC	$11,490.00	Build	Options
Southern	Primary	National Equipment Dealers, LLC	$11,490.00	Build	Options

Bid Award

Contract: FSA26-EQU24.0, Equipment

Group: Trailer: Detachable Neck Lowboy Trailer - 100,000 lbs. GVWR

Item: 535, EAGER BEAVER, Eager Beaver 50-GSL-3 Lowboy, 50-GSL-3

Description: Refer FSA Base Specifications PDF document.

Model Upgrade/Downgrade:

Zone	Rank	Vendor	Price	Build File	Options File
Western	Primary	Dobbs Equipment, LLC	$76,855.00	Build	Options
Northern	Primary	Dobbs Equipment, LLC	$76,855.00	Build	Options
Central	Primary	Dobbs Equipment, LLC	$76,855.00	Build	Options
Southern	Primary	Dobbs Equipment, LLC	$76,855.00	Build	Options

Bid Award

Contract: FSA26-EQU24.0, Equipment

Group: Trailer: Detachable Neck Lowboy Trailer - 100,000 lbs. GVWR

Item: 536, Felling, XF-100-3 HDG, XF-100-3 HDG

Description: Refer FSA Base Specifications PDF document.

Model Upgrade/Downgrade:

Zone	Rank	Vendor	Price	Build File	Options File
Western	Primary	Federal Contracts LLC DBA Federal Contracts Company	$111,673.00	Build	Options
Northern	Primary	Federal Contracts LLC DBA Federal Contracts Company	$111,673.00	Build	Options
Central	Primary	Federal Contracts LLC DBA Federal Contracts Company	$111,673.00	Build	Options
Southern	Primary	Kelly Tractor Co	$95,300.00	Build	Options

Bid Award

Contract: FSA26-EQU24.0, Equipment

Group: Trailer: Detachable Neck Lowboy Trailer - 100,000 lbs. GVWR

Item: 537, Pitts Trailers, 50-Ton Detach with an 18 Inch Load Deck Height, LB50-18GT

Description: Refer FSA Base Specifications PDF document.

Model Upgrade/Downgrade:

Zone	Rank	Vendor	Price	Build File	Options File
Western	Primary Alternate	DeLand Truck Center, Inc. Nationwide Haul LLC	$85,859.00 $90,722.00	Build Build	Options Options
Northern	Primary Alternate	DeLand Truck Center, Inc. Nationwide Haul LLC	$85,859.00 $90,722.00	Build Build	Options Options
Central	Primary Alternate	DeLand Truck Center, Inc. Nationwide Haul LLC	$85,859.00 $90,722.00	Build Build	Options Options
Southern	Primary Alternate	DeLand Truck Center, Inc. Nationwide Haul LLC	$85,859.00 $91,722.00	Build Build	Options Options

Bid Award

Contract: FSA26-EQU24.0, Equipment

Group: Trailer: Detachable Neck Lowboy Trailer - 100,000 lbs. GVWR

Item: 538, Pitts Trailers, LB55-22GT, LB55-22GT

Description: Refer FSA Base Specifications PDF document.

Model Upgrade/Downgrade:

Zone	Rank	Vendor	Price	Build File	Options File
Western	Primary Alternate	DeLand Truck Center, Inc. Nationwide Haul LLC	$79,631.00 $90,722.00	Build Build	Options Options
Northern	Primary Alternate	DeLand Truck Center, Inc. Nationwide Haul LLC	$79,631.00 $90,722.00	Build Build	Options Options
Central	Primary Alternate	DeLand Truck Center, Inc. Nationwide Haul LLC	$79,631.00 $90,722.00	Build Build	Options Options
Southern	Primary Alternate	DeLand Truck Center, Inc. Nationwide Haul LLC	$79,631.00 $91,722.00	Build Build	Options Options

Bid Award

Contract: FSA26-EQU24.0, Equipment

Group: Trailer: Detachable Neck Lowboy Trailer - 100,000 lbs. GVWR

Item: 539, Pitts Trailers, Hydraulic Detachable Trailer, LB51-22DC

Description: Refer FSA Base Specifications PDF document.

Model Upgrade/Downgrade:

Zone	Rank	Vendor	Price	Build File	Options File
Western	Primary Alternate	DeLand Truck Center, Inc. Nationwide Haul LLC	$66,751.00 $70,405.00	Build Build	Options Options
Northern	Primary Alternate	DeLand Truck Center, Inc. Nationwide Haul LLC	$66,751.00 $70,405.00	Build Build	Options Options
Central	Primary Alternate	DeLand Truck Center, Inc. Nationwide Haul LLC	$66,751.00 $70,405.00	Build Build	Options Options
Southern	Primary Alternate	DeLand Truck Center, Inc. Nationwide Haul LLC	$66,751.00 $71,405.00	Build Build	Options Options

Bid Award

Contract: FSA26-EQU24.0, Equipment

Group: Trailer: Detachable Neck Lowboy Trailer - 100,000 lbs. GVWR

Item: 541, Trail King, TK102HDG, TK102HDG

Description: Refer FSA Base Specifications PDF document.

Model Upgrade/Downgrade:

Zone	Rank	Vendor	Price	Build File	Options File
Western	Primary	Alta Construction Equipment Florida, LLC	$105,000.00	Build	Options
Northern	Primary	Alta Construction Equipment Florida, LLC	$105,000.00	Build	Options
Central	Primary	Alta Construction Equipment Florida, LLC	$105,000.00	Build	Options
Southern	Primary	Alta Construction Equipment Florida, LLC	$105,000.00	Build	Options

Bid Award

Contract: FSA26-EQU24.0, Equipment

Group: Trailer: Detachable Neck Lowboy Trailer - 100,000 lbs. GVWR

Item: 669, Kaufman, 50 Ton Detachable Gooseneck Air Ride Trailer – Standard, FRDT50-24-24-A-54-00-N

Description: Refer FSA Base Specifications PDF document.

Model Upgrade/Downgrade:

Zone	Rank	Vendor	Price	Build File	Options File
Western	Primary	National Equipment Dealers, LLC	$74,875.00	Build	Options
Northern	Primary	National Equipment Dealers, LLC	$74,875.00	Build	Options
Central	Primary	National Equipment Dealers, LLC	$74,875.00	Build	Options
Southern	Primary	National Equipment Dealers, LLC	$74,875.00	Build	Options

Bid Award

Contract: FSA26-EQU24.0, Equipment

Group: Trailer: Detachable Neck Lowboy Trailer - 100,000 lbs. GVWR

Item: 670, Towmaster, T-100DTG, T-100DTG

Description: Refer FSA Base Specifications PDF document.

Model Upgrade/Downgrade:

Zone	Rank	Vendor	Price	Build File	Options File
Western	Primary	Ring Power Corporation	$133,751.00	Build	Options
Northern	Primary	Ring Power Corporation	$133,751.00	Build	Options
Central	Primary	Ring Power Corporation	$133,751.00	Build	Options
Southern					

Bid Award

Contract: FSA26-EQU24.0, Equipment

Group: Trailer: Enclosed Cargo Trailer - 7,000 lbs. GVWR

Item: 543, ATC, Stō 400, Stō 400

Description: Refer FSA Base Specifications PDF document.

Model Upgrade/Downgrade:

Zone	Rank	Vendor	Price	Build File	Options File
Western	Primary	RIGHT TRAILERS, INC.	$14,178.00	Build	Options
Northern	Primary	RIGHT TRAILERS, INC.	$13,878.00	Build	Options
Central	Primary	RIGHT TRAILERS, INC.	$13,578.00	Build	Options
Southern	Primary	RIGHT TRAILERS, INC.	$13,878.00	Build	Options

Bid Award

Contract: FSA26-EQU24.0, Equipment

Group: Trailer: Enclosed Cargo Trailer - 7,000 lbs. GVWR

Item: 544, Cargo Mate, Blazer, BL716TA2

Description: Refer FSA Base Specifications PDF document.

Model Upgrade/Downgrade:

Zone	Rank	Vendor	Price	Build File	Options File
Western	Primary	Texas Trailers Sales and Service	$9,531.00	Build	Options
Northern	Primary	Texas Trailers Sales and Service	$8,881.00	Build	Options
Central	Primary	Texas Trailers Sales and Service	$9,131.00	Build	Options
Southern	Primary	Texas Trailers Sales and Service	$9,631.00	Build	Options

Bid Award

Contract: FSA26-EQU24.0, Equipment

Group: Trailer: Enclosed Cargo Trailer - 7,000 lbs. GVWR

Item: 545, Express, ECT7X16TA Enclosed Cargo Trailer, ECT7X16TA

Description: Refer FSA Base Specifications PDF document.

Model Upgrade/Downgrade:

Zone	Rank	Vendor	Price	Build File	Options File
Western	Primary	Texas Trailers Sales and Service	$12,952.00	Build	Options
	Alternate	Federal Contracts LLC DBA Federal Contracts Company	$15,291.00	Build	Options
Northern	Primary	Texas Trailers Sales and Service	$12,302.00	Build	Options
	Alternate	Federal Contracts LLC DBA Federal Contracts Company	$15,291.00	Build	Options
Central	Primary	Texas Trailers Sales and Service	$12,552.00	Build	Options
	Alternate	Federal Contracts LLC DBA Federal Contracts Company	$15,291.00	Build	Options
Southern	Primary	Texas Trailers Sales and Service	$13,052.00	Build	Options
	Alternate	Federal Contracts LLC DBA Federal Contracts Company	$15,291.00	Build	Options

Bid Award

Contract: FSA26-EQU24.0, Equipment

Group: Trailer: Enclosed Cargo Trailer - 7,000 lbs. GVWR

Item: 547, Mission, EZEC7x16, EZEC7x16

Description: Refer FSA Base Specifications PDF document.

Model Upgrade/Downgrade:

Zone	Rank	Vendor	Price	Build File	Options File
Western	Primary	Texas Trailers Sales and Service	$10,863.00	Build	Options
Northern	Primary	Texas Trailers Sales and Service	$10,213.00	Build	Options
Central	Primary	Texas Trailers Sales and Service	$10,463.00	Build	Options
Southern	Primary	Texas Trailers Sales and Service	$10,963.00	Build	Options

Bid Award

Contract: FSA26-EQU24.0, Equipment

Group: Trailer: Enclosed Cargo Trailer - 7,000 lbs. GVWR

Item: 549, Texas Trailers, 7` X 16` Commercial Duty Cargo Trailer, TX7X16TA2

Description: Refer FSA Base Specifications PDF document.

Model Upgrade/Downgrade:

Zone	Rank	Vendor	Price	Build File	Options File
Western	Primary	Texas Trailers Sales and Service	$7,799.00	Build	Options
Northern	Primary	Texas Trailers Sales and Service	$7,149.00	Build	Options
Central	Primary	Texas Trailers Sales and Service	$7,399.00	Build	Options
Southern	Primary	Texas Trailers Sales and Service	$7,899.00	Build	Options

Bid Award

Contract: FSA26-EQU24.0, Equipment

Group: Trailer: Enclosed Cargo Trailer - 7,000 lbs. GVWR

Item: 550, Wells Cargo, HD Wagon, WHD716T2

Description: Refer FSA Base Specifications PDF document.

Model Upgrade/Downgrade:

Zone	Rank	Vendor	Price	Build File	Options File
Western	Primary	Texas Trailers Sales and Service	$15,070.00	Build	Options
Northern	Primary	Texas Trailers Sales and Service	$14,420.00	Build	Options
Central	Primary	Texas Trailers Sales and Service	$14,670.00	Build	Options
Southern	Primary	Texas Trailers Sales and Service	$15,170.00	Build	Options

Bid Award

Contract: FSA26-EQU24.0, Equipment

Group: Trailer: Enclosed Cargo Trailer - 7,000 lbs. GVWR

Item: 671, Kaufman, 7,000 GVWR – 7’ Wide Tandem Axle Cargo Trailer – Deluxe, FEN-2/3.5K-7X16D

Description: Refer FSA Base Specifications PDF document.

Model Upgrade/Downgrade:

Zone	Rank	Vendor	Price	Build File	Options File
Western	Primary	National Equipment Dealers, LLC	$8,488.00	Build	Options
Northern	Primary	National Equipment Dealers, LLC	$8,488.00	Build	Options
Central	Primary	National Equipment Dealers, LLC	$8,488.00	Build	Options
Southern	Primary	National Equipment Dealers, LLC	$8,488.00	Build	Options

Bid Award

Contract: FSA26-EQU24.0, Equipment

Group: Trailer: Fixed Neck Lowboy Trailer - 70,000 lbs. GVWR

Item: 551, Dorsey Trailers, Fixed Neck Lowboy, LB 35-33CS

Description: Refer FSA Base Specifications PDF document.

Model Upgrade/Downgrade:

Zone	Rank	Vendor	Price	Build File	Options File
Western	Primary	DeLand Truck Center, Inc.	$44,650.00	Build	Options
Northern	Primary	DeLand Truck Center, Inc.	$44,850.00	Build	Options
Central	Primary	DeLand Truck Center, Inc.	$44,900.00	Build	Options
Southern	Primary	DeLand Truck Center, Inc.	$44,900.00	Build	Options

Bid Award

Contract: FSA26-EQU24.0, Equipment

Group: Trailer: Fixed Neck Lowboy Trailer - 70,000 lbs. GVWR

Item: 552, Felling, FT-70-2 MX-L, FT-70-2 MX-L

Description: Refer FSA Base Specifications PDF document.

Model Upgrade/Downgrade:

Zone	Rank	Vendor	Price	Build File	Options File
Western	Primary	Federal Contracts LLC DBA Federal Contracts Company	$56,295.00	Build	Options
Northern	Primary	Federal Contracts LLC DBA Federal Contracts Company	$56,295.00	Build	Options
Central	Primary	Federal Contracts LLC DBA Federal Contracts Company	$56,295.00	Build	Options
Southern					

Bid Award

Contract: FSA26-EQU24.0, Equipment

Group: Trailer: Fixed Neck Lowboy Trailer - 70,000 lbs. GVWR

Item: 553, Pitts Trailers, 35-Ton Fixed Neck Lowboy, LB35-33CS

Description: Refer FSA Base Specifications PDF document.

Model Upgrade/Downgrade:

Zone	Rank	Vendor	Price	Build File	Options File
Western	Primary	DeLand Truck Center, Inc.	$44,948.00	Build	Options
Northern	Primary	DeLand Truck Center, Inc.	$44,948.00	Build	Options
Central	Primary	DeLand Truck Center, Inc.	$44,948.00	Build	Options
Southern	Primary	DeLand Truck Center, Inc.	$44,948.00	Build	Options

Bid Award

Contract: FSA26-EQU24.0, Equipment

Group: Trailer: Fixed Neck Lowboy Trailer - 70,000 lbs. GVWR

Item: 672, Towmaster, T-70RG, T-70RG

Description: Refer FSA Base Specifications PDF document.

Model Upgrade/Downgrade:

Zone	Rank	Vendor	Price	Build File	Options File
Western	Primary	Ring Power Corporation	$78,698.00	Build	Options
Northern	Primary	Ring Power Corporation	$78,698.00	Build	Options
Central	Primary	Ring Power Corporation	$78,698.00	Build	Options
Southern					

Bid Award

Contract: FSA26-EQU24.0, Equipment

Group: Trailer: Flatbed Tilt Trailer - 40,000 lbs. GVWR

Item: 555, Behnke, Tag-Style Flatbed Tilt Trailer, FB8X28TPT-40L

Description: Refer FSA Base Specifications PDF document.

Model Upgrade/Downgrade:

Zone	Rank	Vendor	Price	Build File	Options File
Western	Primary	RIGHT TRAILERS, INC.	$41,906.00	Build	Options
Northern	Primary	RIGHT TRAILERS, INC.	$41,506.00	Build	Options
Central	Primary	RIGHT TRAILERS, INC.	$41,206.00	Build	Options
Southern	Primary	RIGHT TRAILERS, INC.	$41,506.00	Build	Options

Bid Award

Contract: FSA26-EQU24.0, Equipment

Group: Trailer: Flatbed Tilt Trailer - 40,000 lbs. GVWR

Item: 673, Econoline, Dual Tandem 20-Ton Tilt, DP2029TA

Description: Refer FSA Base Specifications PDF document.

Model Upgrade/Downgrade:

Zone	Rank	Vendor	Price	Build File	Options File
Western	Primary	DeLand Truck Center, Inc.	$41,621.00	Build	Options
Northern	Primary	DeLand Truck Center, Inc.	$41,621.00	Build	Options
Central	Primary	DeLand Truck Center, Inc.	$41,621.00	Build	Options
Southern	Primary	DeLand Truck Center, Inc.	$41,621.00	Build	Options

Bid Award

Contract: FSA26-EQU24.0, Equipment

Group: Trailer: Flatbed Tilt Trailer - 40,000 lbs. GVWR

Item: 674, Interstate, 40TDL, 40TDL

Description: Refer FSA Base Specifications PDF document.

Model Upgrade/Downgrade:

Zone	Rank	Vendor	Price	Build File	Options File
Western					
Northern					
Central	Primary	Kelly Tractor Co	$35,750.00	Build	Options
Southern	Primary	Kelly Tractor Co	$35,750.00	Build	Options

Bid Award

Contract: FSA26-EQU24.0, Equipment

Group: Trailer: Flatbed Tilt Trailer - 40,000 lbs. GVWR

Item: 675, Towmaster, T-40 T, T-40 T

Description: Refer FSA Base Specifications PDF document.

Model Upgrade/Downgrade:

Zone	Rank	Vendor	Price	Build File	Options File
Western	Primary	Ring Power Corporation	$48,249.00	Build	Options
Northern	Primary	Ring Power Corporation	$48,249.00	Build	Options
Central	Primary	Ring Power Corporation	$48,249.00	Build	Options
Southern					

Bid Award

Contract: FSA26-EQU24.0, Equipment

Group: Trailer: Hydraulic Drop Deck Trailer - 13,500 lbs. GVWR

Item: 556, Air-tow Trailers, Flatbed Model, T14-10

Description: Refer FSA Base Specifications PDF document.

Model Upgrade/Downgrade:

Zone	Rank	Vendor	Price	Build File	Options File
Western	Primary	Texas Trailers Sales and Service	$19,300.00	Build	Options
Northern	Primary	Texas Trailers Sales and Service	$18,650.00	Build	Options
Central	Primary	Texas Trailers Sales and Service	$18,900.00	Build	Options
Southern	Primary	Texas Trailers Sales and Service	$19,400.00	Build	Options

Bid Award

Contract: FSA26-EQU24.0, Equipment

Group: Trailer: Hydraulic Drop Deck Trailer - 13,500 lbs. GVWR

Item: 557, Triple L Trailers, Hydraulic Drop Deck Flatbed Trailer, 1016

Description: Refer FSA Base Specifications PDF document.

Model Upgrade/Downgrade:

Zone	Rank	Vendor	Price	Build File	Options File
Western	Primary	Federal Contracts LLC DBA Federal Contracts Company	$28,124.00	Build	Options
Northern	Primary	Federal Contracts LLC DBA Federal Contracts Company	$28,124.00	Build	Options
Central	Primary	Federal Contracts LLC DBA Federal Contracts Company	$28,124.00	Build	Options
Southern	Primary	Federal Contracts LLC DBA Federal Contracts Company	$28,124.00	Build	Options

Bid Award

Contract: FSA26-EQU24.0, Equipment

Group: Trailer: Hydraulic Drop Deck Trailer - 13,500 lbs. GVWR

Item: 676, Felling, FT-12 EZ-T, FT-12 EZ-T

Description: Refer FSA Base Specifications PDF document.

Model Upgrade/Downgrade:

Zone	Rank	Vendor	Price	Build File	Options File
Western	Primary	Kelly Tractor Co	$24,995.00	Build	Options
Northern	Primary	Kelly Tractor Co	$24,995.00	Build	Options
Central	Primary	Kelly Tractor Co	$23,995.00	Build	Options
Southern	Primary	Kelly Tractor Co	$23,445.00	Build	Options

Bid Award

Contract: FSA26-EQU24.0, Equipment

Group: Trailer: Hydraulic Tail Trailer - 70,000 lbs. GVWR

Item: 561, Towmaster, T-70HT, T-70HT

Description: Refer FSA Base Specifications PDF document.

Model Upgrade/Downgrade:

Zone	Rank	Vendor	Price	Build File	Options File
Western	Primary	Ring Power Corporation	$115,339.00	Build	Options
Northern	Primary	Ring Power Corporation	$115,339.00	Build	Options
Central	Primary	Ring Power Corporation	$115,339.00	Build	Options
Southern	Primary	Kelly Tractor Co	$115,000.00	Build	Options

Bid Award

Contract: FSA26-EQU24.0, Equipment

Group: Trailer: Hydraulic Tail Trailer - 70,000 lbs. GVWR

Item: 562, Trail King, TK80HT, TK80HT

Description: Refer FSA Base Specifications PDF document.

Model Upgrade/Downgrade:

Zone	Rank	Vendor	Price	Build File	Options File
Western	Primary	Alta Construction Equipment Florida, LLC	$110,000.00	Build	Options
Northern	Primary	Alta Construction Equipment Florida, LLC	$110,000.00	Build	Options
Central	Primary	Alta Construction Equipment Florida, LLC	$110,000.00	Build	Options
Southern	Primary	Alta Construction Equipment Florida, LLC	$110,000.00	Build	Options

Bid Award

Contract: FSA26-EQU24.0, Equipment

Group: Trailer: Hydraulic Tail Trailer - 70,000 lbs. GVWR

Item: 563, XL Specialized Trailers, XL 80PT, XL 80PT

Description: Refer FSA Base Specifications PDF document.

Model Upgrade/Downgrade:

Zone	Rank	Vendor	Price	Build File	Options File
Western	Primary	Nationwide Haul LLC	$112,230.00	Build	Options
Northern	Primary	Nationwide Haul LLC	$112,230.00	Build	Options
Central	Primary Alternate	Nationwide Haul LLC Kelly Tractor Co	$112,230.00 $112,425.00	Build Build	Options Options
Southern	Primary Alternate	Kelly Tractor Co Nationwide Haul LLC	$111,425.00 $112,230.00	Build Build	Options Options

Bid Award

Contract: FSA26-EQU24.0, Equipment

Group: Trailer: Leachate Tanker - 6,500 gallons

Item: 564, MAC Trailer, Stainless Steel Leachate Tank, SRX-6500-1-2-NC

Description: Refer FSA Base Specifications PDF document.

Model Upgrade/Downgrade:

Zone	Rank	Vendor	Price	Build File	Options File
Western	Primary	Nationwide Haul LLC	$133,083.00	Build	Options
Northern	Primary	Nationwide Haul LLC	$133,083.00	Build	Options
Central	Primary	Nationwide Haul LLC	$133,083.00	Build	Options
Southern	Primary	Nationwide Haul LLC	$134,083.00	Build	Options

Bid Award

Contract: FSA26-EQU24.0, Equipment

Group: Trailer: Livestock Trailer - 7,000 lbs. GVWR

Item: 565, Delta Trailers, 500ES-16, 500ES-16

Description: Refer FSA Base Specifications PDF document.

Model Upgrade/Downgrade:

Zone	Rank	Vendor	Price	Build File	Options File
Western	Primary	Texas Trailers Sales and Service	$9,480.00	Build	Options
Northern	Primary	Texas Trailers Sales and Service	$8,830.00	Build	Options
Central	Primary	Texas Trailers Sales and Service	$9,080.00	Build	Options
Southern	Primary	Texas Trailers Sales and Service	$9,580.00	Build	Options

Bid Award

Contract: FSA26-EQU24.0, Equipment

Group: Trailer: Livestock Trailer - 7,000 lbs. GVWR

Item: 566, Frontier Trailers, LIV167LITE, LIV167LITE

Description: Refer FSA Base Specifications PDF document.

Model Upgrade/Downgrade:

Zone	Rank	Vendor	Price	Build File	Options File
Western	Primary	Texas Trailers Sales and Service	$16,865.00	Build	Options
	Alternate	RIGHT TRAILERS, INC.	$18,677.00	Build	Options
Northern	Primary	Texas Trailers Sales and Service	$16,215.00	Build	Options
	Alternate	RIGHT TRAILERS, INC.	$18,377.00	Build	Options
Central	Primary	Texas Trailers Sales and Service	$16,465.00	Build	Options
	Alternate	RIGHT TRAILERS, INC.	$18,077.00	Build	Options
Southern	Primary	Texas Trailers Sales and Service	$16,965.00	Build	Options
	Alternate	RIGHT TRAILERS, INC.	$18,377.00	Build	Options

Bid Award

Contract: FSA26-EQU24.0, Equipment

Group: Trailer: Mobile Fuel Trailer - 460 gallons

Item: 568, Boss Trailers, 590 Gallon Fuel Trailer, FT590052

Description: Refer FSA Base Specifications PDF document.

Model Upgrade/Downgrade:

Zone	Rank	Vendor	Price	Build File	Options File
Western	Primary	Texas Trailers Sales and Service	$13,443.00	Build	Options
Northern	Primary	Texas Trailers Sales and Service	$12,793.00	Build	Options
Central	Primary	Texas Trailers Sales and Service	$13,043.00	Build	Options
Southern	Primary	Texas Trailers Sales and Service	$13,543.00	Build	Options

Bid Award

Contract: FSA26-EQU24.0, Equipment

Group: Trailer: Mobile Fuel Trailer - 460 gallons

Item: 569, Thunder Creek, EV500 Fuel Trailer, EV500

Description: Refer FSA Base Specifications PDF document.

Model Upgrade/Downgrade:

Zone	Rank	Vendor	Price	Build File	Options File
Western					
Northern					
Central					
Southern	Primary	Kelly Tractor Co	$15,950.00	Build	Options

Bid Award

Contract: FSA26-EQU24.0, Equipment

Group: Trailer: Multi Tank Fuel/Service 880 gallons Non-Hazmat - 14,000 lbs. GVWR

Item: 570, Thunder Creek, MTT920 Fuel Trailer, MTT920

Description: Refer FSA Base Specifications PDF document.

Model Upgrade/Downgrade:

Zone	Rank	Vendor	Price	Build File	Options File
Western					
Northern					
Central					
Southern	Primary	Kelly Tractor Co	$31,800.00	Build	Options

Bid Award

Contract: FSA26-EQU24.0, Equipment

Group: Trailer: Multi Tank Fuel/Service 880 gallons Non-Hazmat - 14,000 lbs. GVWR

Item: 677, Boss Trailers, Non-Hazmat 880 Gallon Multi Tank Fuel Trailer, MT880072

Description: Refer FSA Base Specifications PDF document.

Model Upgrade/Downgrade:

Zone	Rank	Vendor	Price	Build File	Options File
Western	Primary	Texas Trailers Sales and Service	$28,227.00	Build	Options
Northern	Primary	Texas Trailers Sales and Service	$27,577.00	Build	Options
Central	Primary	Texas Trailers Sales and Service	$27,827.00	Build	Options
Southern	Primary	Texas Trailers Sales and Service	$28,327.00	Build	Options

Bid Award

Contract: FSA26-EQU24.0, Equipment

Group: Trailer: Pothole Patch Unit - 12,000 lbs. GVWR

Item: 571, Falcon, 4-Ton Transporter, 4T1B-D

Description: Refer FSA Base Specifications PDF document.

Model Upgrade/Downgrade:

Zone	Rank	Vendor	Price	Build File	Options File
Western	Primary	Jet-Vac Equipment Company, LLC	$51,600.00	Build	Options
Northern	Primary	Jet-Vac Equipment Company, LLC	$51,600.00	Build	Options
Central	Primary	Jet-Vac Equipment Company, LLC	$51,600.00	Build	Options
Southern	Primary	Jet-Vac Equipment Company, LLC	$51,600.00	Build	Options

Bid Award

Contract: FSA26-EQU24.0, Equipment

Group: Trailer: Pothole Patch Unit - 12,000 lbs. GVWR

Item: 572, Stepp Manufacturing, SPHD, SPHD 2.0

Description: Refer FSA Base Specifications PDF document.

Model Upgrade/Downgrade:

Zone	Rank	Vendor	Price	Build File	Options File
Western	Primary	Southern Sewer Equipment Sales	$57,578.00	Build	Options
Northern	Primary	Southern Sewer Equipment Sales	$57,578.00	Build	Options
Central	Primary	Southern Sewer Equipment Sales	$57,578.00	Build	Options
Southern	Primary	Southern Sewer Equipment Sales	$57,578.00	Build	Options

Bid Award

Contract: FSA26-EQU24.0, Equipment

Group: Trailer: Pressure/Vacuum Trailer - 6,000 gallons

Item: 573, MAC Trailer, Stainless Steel Vac Trailer, SRX-6000-1-NC

Description: Refer FSA Base Specifications PDF document.

Model Upgrade/Downgrade:

Zone	Rank	Vendor	Price	Build File	Options File
Western	Primary	Nationwide Haul LLC	$167,365.00	Build	Options
Northern	Primary	Nationwide Haul LLC	$167,365.00	Build	Options
Central	Primary	Nationwide Haul LLC	$167,365.00	Build	Options
Southern	Primary	Nationwide Haul LLC	$168,365.00	Build	Options

Bid Award

Contract: FSA26-EQU24.0, Equipment

Group: Trailer: Pull Behind Dump Trailer - 14,000 lbs. GVWR

Item: 574, American Made Products, Inc., Dump Trailer, AMP14DP-7T

Description: Refer FSA Base Specifications PDF document.

Model Upgrade/Downgrade:

Zone	Rank	Vendor	Price	Build File	Options File
Western	Primary	DeLand Truck Center, Inc.	$13,600.00	Build	Options
Northern	Primary	DeLand Truck Center, Inc.	$13,300.00	Build	Options
Central	Primary	DeLand Truck Center, Inc.	$13,300.00	Build	Options
Southern	Primary	DeLand Truck Center, Inc.	$13,600.00	Build	Options

Bid Award

Contract: FSA26-EQU24.0, Equipment

Group: Trailer: Pull Behind Dump Trailer - 14,000 lbs. GVWR

Item: 575, Big Tex, 14LP-14, 14LP-14

Description: Refer FSA Base Specifications PDF document.

Model Upgrade/Downgrade:

Zone	Rank	Vendor	Price	Build File	Options File
Western	Primary	Texas Trailers Sales and Service	$10,243.00	Build	Options
Northern	Primary	Texas Trailers Sales and Service	$9,593.00	Build	Options
Central	Primary	Texas Trailers Sales and Service	$9,843.00	Build	Options
Southern	Primary	Texas Trailers Sales and Service	$10,343.00	Build	Options

Bid Award

Contract: FSA26-EQU24.0, Equipment

Group: Trailer: Pull Behind Dump Trailer - 14,000 lbs. GVWR

Item: 576, Down 2 Earth, 7` X 14` Dump 14k GVWR, DTE714DT7B

Description: Refer FSA Base Specifications PDF document.

Model Upgrade/Downgrade:

Zone	Rank	Vendor	Price	Build File	Options File
Western	Primary	Love Power Equipment, Inc	$12,565.00	Build	Options
Northern	Primary	Love Power Equipment, Inc	$12,265.00	Build	Options
Central	Primary	Love Power Equipment, Inc	$12,265.00	Build	Options
Southern	Primary	Love Power Equipment, Inc	$12,265.00	Build	Options

Bid Award

Contract: FSA26-EQU24.0, Equipment

Group: Trailer: Pull Behind Dump Trailer - 14,000 lbs. GVWR

Item: 578, Felling, FT-14 DT HD, FT-14 DT HD

Description: Refer FSA Base Specifications PDF document.

Model Upgrade/Downgrade:

Zone	Rank	Vendor	Price	Build File	Options File
Western	Primary	Federal Contracts LLC DBA Federal Contracts Company	$23,744.00	Build	Options
Northern	Primary	Federal Contracts LLC DBA Federal Contracts Company	$23,744.00	Build	Options
Central	Primary	Federal Contracts LLC DBA Federal Contracts Company	$23,744.00	Build	Options
Southern	Primary	Kelly Tractor Co	$22,425.00	Build	Options

Bid Award

Contract: FSA26-EQU24.0, Equipment

Group: Trailer: Pull Behind Dump Trailer - 14,000 lbs. GVWR

Item: 579, Maxx-D, I-Beam Dump Trailer, DKX-14K 83"

Description: Refer FSA Base Specifications PDF document.

Model Upgrade/Downgrade:

Zone	Rank	Vendor	Price	Build File	Options File
Western	Primary	RIGHT TRAILERS, INC.	$13,379.00	Build	Options
Northern	Primary	RIGHT TRAILERS, INC.	$13,079.00	Build	Options
Central	Primary	RIGHT TRAILERS, INC.	$12,779.00	Build	Options
Southern	Primary	RIGHT TRAILERS, INC.	$13,079.00	Build	Options

Bid Award

Contract: FSA26-EQU24.0, Equipment

Group: Trailer: Pull Behind Dump Trailer - 14,000 lbs. GVWR

Item: 580, Pitts Trailers, 7-Ton High Wall Equipment Trailer, TDH7

Description: Refer FSA Base Specifications PDF document.

Model Upgrade/Downgrade:

Zone	Rank	Vendor	Price	Build File	Options File
Western	Primary	Nationwide Haul LLC	$19,995.00	Build	Options
Northern	Primary	Nationwide Haul LLC	$19,995.00	Build	Options
Central	Primary	Nationwide Haul LLC	$19,995.00	Build	Options
Southern	Primary	Nationwide Haul LLC	$20,995.00	Build	Options

Bid Award

Contract: FSA26-EQU24.0, Equipment

Group: Trailer: Pull Behind Dump Trailer - 14,000 lbs. GVWR

Item: 582, Towmaster, T-12HD, T-12HD

Description: Refer FSA Base Specifications PDF document.

Model Upgrade/Downgrade:

Zone	Rank	Vendor	Price	Build File	Options File
Western					
Northern					
Central					
Southern	Primary	Kelly Tractor Co	$20,150.00	Build	Options

Bid Award

Contract: FSA26-EQU24.0, Equipment

Group: Trailer: Pull Behind Dump Trailer - 14,000 lbs. GVWR

Item: 583, U-Dump, Pro Series, 831414LP

Description: Refer FSA Base Specifications PDF document.

Model Upgrade/Downgrade:

Zone	Rank	Vendor	Price	Build File	Options File
Western	Primary	RIGHT TRAILERS, INC.	$11,263.00	Build	Options
Northern	Primary	RIGHT TRAILERS, INC.	$10,963.00	Build	Options
Central	Primary	RIGHT TRAILERS, INC.	$10,663.00	Build	Options
Southern	Primary	RIGHT TRAILERS, INC.	$10,963.00	Build	Options

Bid Award

Contract: FSA26-EQU24.0, Equipment

Group: Trailer: Pull Behind Dump Trailer - 14,000 lbs. GVWR

Item: 678, Kaufman, 14,000 GVWR Standard Medium Duty Dump Trailer – 14ft x 80in, FXHLP-7K-14S

Description: Refer FSA Base Specifications PDF document.

Model Upgrade/Downgrade:

Zone	Rank	Vendor	Price	Build File	Options File
Western	Primary	National Equipment Dealers, LLC	$11,238.00	Build	Options
Northern	Primary	National Equipment Dealers, LLC	$11,238.00	Build	Options
Central	Primary	National Equipment Dealers, LLC	$11,238.00	Build	Options
Southern	Primary	National Equipment Dealers, LLC	$11,238.00	Build	Options

Bid Award

Contract: FSA26-EQU24.0, Equipment

Group: Trailer: Refrigeration/Freezer Trailer - 7,000 lbs. GVWR

Item: 585, American Made Products, Inc., Cooler Trailer, AMP12CT-3T

Description: Refer FSA Base Specifications PDF document.

Model Upgrade/Downgrade:

Zone	Rank	Vendor	Price	Build File	Options File
Western	Primary	DeLand Truck Center, Inc.	$26,500.00	Build	
Northern	Primary	DeLand Truck Center, Inc.	$26,500.00	Build	
Central	Primary	DeLand Truck Center, Inc.	$26,500.00	Build	
Southern	Primary	DeLand Truck Center, Inc.	$26,500.00	Build	

Bid Award

Contract: FSA26-EQU24.0, Equipment

Group: Trailer: Refrigeration/Freezer Trailer - 7,000 lbs. GVWR

Item: 586, Polar King Mobile Trailers, PKM612, PKM612

Description: Refer FSA Base Specifications PDF document.

Model Upgrade/Downgrade:

Zone	Rank	Vendor	Price	Build File	Options File
Western	Primary	Texas Trailers Sales and Service	$41,181.00	Build	Options
Northern	Primary	Texas Trailers Sales and Service	$40,531.00	Build	Options
Central	Primary	Texas Trailers Sales and Service	$40,781.00	Build	Options
Southern	Primary	Texas Trailers Sales and Service	$41,281.00	Build	Options

Bid Award

Contract: FSA26-EQU24.0, Equipment

Group: Trailer: Restroom Trailer ADA Compliant

Item: 587, Comforts of Home Services, Inc., 3 Station Restroom Trailer, 4303NBCA

Description: Refer FSA Base Specifications PDF document.

Model Upgrade/Downgrade:

Zone	Rank	Vendor	Price	Build File	Options File
Western	Primary	RIGHT TRAILERS, INC.	$77,222.00	Build	Options
Northern	Primary	RIGHT TRAILERS, INC.	$76,922.00	Build	Options
Central	Primary	RIGHT TRAILERS, INC.	$76,622.00	Build	Options
Southern	Primary	RIGHT TRAILERS, INC.	$76,922.00	Build	Options

Bid Award

Contract: FSA26-EQU24.0, Equipment

Group: Trailer: Restroom Trailer ADA Compliant

Item: 588, UltraLav Trailers, ADA+2 Restroom Trailer, WC20-ADA2

Description: Refer FSA Base Specifications PDF document.

Model Upgrade/Downgrade:

Zone	Rank	Vendor	Price	Build File	Options File
Western	Primary	Texas Trailers Sales and Service	$69,400.00	Build	Options
Northern	Primary	Texas Trailers Sales and Service	$68,750.00	Build	Options
Central	Primary	Texas Trailers Sales and Service	$69,000.00	Build	Options
Southern	Primary	Texas Trailers Sales and Service	$69,500.00	Build	Options

Bid Award

Contract: FSA26-EQU24.0, Equipment

Group: Trailer: Sludge Trailer - 80,000 lbs. GVWR

Item: 589, East Manufacturing, Genesis, Frame Dump Trailer

Description: Refer FSA Base Specifications PDF document.

Model Upgrade/Downgrade:

Zone	Rank	Vendor	Price	Build File	Options File
Western	Primary	Rechtien International Trucks	$74,962.00	Build	Options
Northern	Primary	Rechtien International Trucks	$74,962.00	Build	Options
Central	Primary	Rechtien International Trucks	$74,962.00	Build	Options
Southern	Primary	Rechtien International Trucks	$74,962.00	Build	Options

Bid Award

Contract: FSA26-EQU24.0, Equipment

Group: Trailer: Sludge Trailer - 80,000 lbs. GVWR

Item: 590, MAC Trailer, Sludge Trailer, FTEDSP30

Description: Refer FSA Base Specifications PDF document.

Model Upgrade/Downgrade:

Zone	Rank	Vendor	Price	Build File	Options File
Western	Primary	Nationwide Haul LLC	$71,853.00	Build	Options
Northern	Primary	Nationwide Haul LLC	$71,853.00	Build	Options
Central	Primary	Nationwide Haul LLC	$71,853.00	Build	Options
Southern	Primary	Nationwide Haul LLC	$72,853.00	Build	Options

Bid Award

Contract: FSA26-EQU24.0, Equipment

Group: Trailer: Sludge Trailer - 80,000 lbs. GVWR

Item: 679, Ravens by Kruz Inc., Aluminum S&P Dump Trailer, RFA-30-SF

Description: Refer FSA Base Specifications PDF document.

Model Upgrade/Downgrade:

Zone	Rank	Vendor	Price	Build File	Options File
Western	Primary	DeLand Truck Center, Inc.	$74,926.00	Build	Options
Northern	Primary	DeLand Truck Center, Inc.	$74,926.00	Build	Options
Central	Primary	DeLand Truck Center, Inc.	$74,926.00	Build	Options
Southern	Primary	DeLand Truck Center, Inc.	$74,926.00	Build	Options

Bid Award

Contract: FSA26-EQU24.0, Equipment

Group: Trailer: Sludge Trailer - 80,000 lbs. GVWR

Item: 680, Warren Equipment Inc., WRDT-AS, WRDT-AS

Description: Refer FSA Base Specifications PDF document.

Model Upgrade/Downgrade:

Zone	Rank	Vendor	Price	Build File	Options File
Western	Primary	WARREN EQUIPMENT, INC	$63,000.00	Build	
Northern	Primary	WARREN EQUIPMENT, INC	$63,000.00	Build	
Central	Primary	WARREN EQUIPMENT, INC	$63,000.00	Build	
Southern	Primary	WARREN EQUIPMENT, INC	$63,000.00	Build	

Bid Award

Contract: FSA26-EQU24.0, Equipment

Group: Trailer: Sludge Trailer - 80,000 lbs. GVWR

Item: 681, Travis Trailer, Sludge 30ft. Classic S-96, Sludge 30ft. Classic S-96

Description: Refer FSA Base Specifications PDF document.

Model Upgrade/Downgrade:

Zone	Rank	Vendor	Price	Build File	Options File
Western	Primary	TRAVIS BODY & TRAILER INC	$72,095.00	Build	Options
Northern	Primary	TRAVIS BODY & TRAILER INC	$72,695.00	Build	Options
Central	Primary	TRAVIS BODY & TRAILER INC	$73,195.00	Build	Options
Southern	Primary	TRAVIS BODY & TRAILER INC	$73,395.00	Build	Options

Bid Award

Contract: FSA26-EQU24.0, Equipment

Group: Trailer: Utility/Equipment Trailer - 7,000 lbs. GVWR

Item: 591, Big Tex, 70PI-16, 70PI-16

Description: Refer FSA Base Specifications PDF document.

Model Upgrade/Downgrade:

Zone	Rank	Vendor	Price	Build File	Options File
Western	Primary	Texas Trailers Sales and Service	$4,757.00	Build	Options
Northern	Primary	Texas Trailers Sales and Service	$4,107.00	Build	Options
Central	Primary	Texas Trailers Sales and Service	$4,357.00	Build	Options
Southern	Primary	Texas Trailers Sales and Service	$4,857.00	Build	Options

Bid Award

Contract: FSA26-EQU24.0, Equipment

Group: Trailer: Utility/Equipment Trailer - 7,000 lbs. GVWR

Item: 592, Blue Collar Trailers, Utility Trailer, 7x16TA2

Description: Refer FSA Base Specifications PDF document.

Model Upgrade/Downgrade:

Zone	Rank	Vendor	Price	Build File	Options File
Western	Primary	RIGHT TRAILERS, INC.	$5,280.00	Build	Options
Northern	Primary	RIGHT TRAILERS, INC.	$4,980.00	Build	Options
Central	Primary	RIGHT TRAILERS, INC.	$4,680.00	Build	Options
Southern	Primary	RIGHT TRAILERS, INC.	$4,980.00	Build	Options

Bid Award

Contract: FSA26-EQU24.0, Equipment

Group: Trailer: Utility/Equipment Trailer - 7,000 lbs. GVWR

Item: 593, Down 2 Earth, 76" X 16` Landscape/Utility Tandem, DTE7616UT3.5B

Description: Refer FSA Base Specifications PDF document.

Model Upgrade/Downgrade:

Zone	Rank	Vendor	Price	Build File	Options File
Western	Primary	Love Power Equipment, Inc	$4,100.00	Build	Options
	Alternate	Ameri-Recreational Sports, LLC	$5,000.00	Build	Options
Northern	Primary	Love Power Equipment, Inc	$3,900.00	Build	Options
	Alternate	Ameri-Recreational Sports, LLC	$4,600.00	Build	Options
Central	Primary	Love Power Equipment, Inc	$3,900.00	Build	Options
	Alternate	Ameri-Recreational Sports, LLC	$4,300.00	Build	Options
Southern	Primary	Love Power Equipment, Inc	$4,100.00	Build	Options
	Alternate	Ameri-Recreational Sports, LLC	$4,400.00	Build	Options

Bid Award

Contract: FSA26-EQU24.0, Equipment

Group: Trailer: Utility/Equipment Trailer - 7,000 lbs. GVWR

Item: 596, Maxx-D, Tandem Axle Utility Trailer, U3X-7K

Description: Refer FSA Base Specifications PDF document.

Model Upgrade/Downgrade:

Zone	Rank	Vendor	Price	Build File	Options File
Western	Primary	RIGHT TRAILERS, INC.	$6,617.00	Build	Options
Northern	Primary	RIGHT TRAILERS, INC.	$6,317.00	Build	Options
Central	Primary	RIGHT TRAILERS, INC.	$6,017.00	Build	Options
Southern	Primary	RIGHT TRAILERS, INC.	$6,317.00	Build	Options

Bid Award

Contract: FSA26-EQU24.0, Equipment

Group: Trailer: Utility/Equipment Trailer - 7,000 lbs. GVWR

Item: 597, Mission, MLS6.5X16 2.0, MLS6.5X16 2.0

Description: Refer FSA Base Specifications PDF document.

Model Upgrade/Downgrade:

Zone	Rank	Vendor	Price	Build File	Options File
Western	Primary Alternate	Texas Trailers Sales and Service RIGHT TRAILERS, INC.	$6,335.00 $7,058.00	Build Build	Options Options
Northern	Primary Alternate	Texas Trailers Sales and Service RIGHT TRAILERS, INC.	$5,685.00 $6,758.00	Build Build	Options Options
Central	Primary Alternate	Texas Trailers Sales and Service RIGHT TRAILERS, INC.	$5,935.00 $6,458.00	Build Build	Options Options
Southern	Primary Alternate	Texas Trailers Sales and Service RIGHT TRAILERS, INC.	$6,435.00 $6,758.00	Build Build	Options Options

Bid Award

Contract: FSA26-EQU24.0, Equipment

Group: Trailer: Utility/Equipment Trailer - 7,000 lbs. GVWR

Item: 599, Texas Trailers, UT61670GV, UT61670GV

Description: Refer FSA Base Specifications PDF document.

Model Upgrade/Downgrade:

Zone	Rank	Vendor	Price	Build File	Options File
Western	Primary	Texas Trailers Sales and Service	$4,800.00	Build	Options
Northern	Primary	Texas Trailers Sales and Service	$4,150.00	Build	Options
Central	Primary	Texas Trailers Sales and Service	$4,400.00	Build	Options
Southern	Primary	Texas Trailers Sales and Service	$4,900.00	Build	Options

Bid Award

Contract: FSA26-EQU24.0, Equipment

Group: Trailer: Utility/Equipment Trailer - 7,000 lbs. GVWR

Item: 600, Trail King, TK12U, TK12U

Description: Refer FSA Base Specifications PDF document.

Model Upgrade/Downgrade:

Zone	Rank	Vendor	Price	Build File	Options File
Western	Primary	Alta Construction Equipment Florida, LLC	$17,500.00	Build	Options
Northern	Primary	Alta Construction Equipment Florida, LLC	$17,500.00	Build	Options
Central	Primary	Alta Construction Equipment Florida, LLC	$17,500.00	Build	Options
Southern	Primary	Alta Construction Equipment Florida, LLC	$17,500.00	Build	Options

Bid Award

Contract: FSA26-EQU24.0, Equipment

Group: Trailer: Utility/Equipment Trailer - 7,000 lbs. GVWR

Item: 682, Kaufman, Standard Landscape Utility Trailer 7,000 GVWR – 16ft, FB-3.5K-16S

Description: Refer FSA Base Specifications PDF document.

Model Upgrade/Downgrade:

Zone	Rank	Vendor	Price	Build File	Options File
Western	Primary	National Equipment Dealers, LLC	$5,862.00	Build	Options
Northern	Primary	National Equipment Dealers, LLC	$5,862.00	Build	Options
Central	Primary	National Equipment Dealers, LLC	$5,862.00	Build	Options
Southern	Primary	National Equipment Dealers, LLC	$5,862.00	Build	Options

Bid Award

Contract: FSA26-EQU24.0, Equipment

Group: Trailer: Waste Trailer with Walking Floor

Item: 602, MAC Trailer, TNSP48MF, TNSP48MF

Description: Refer FSA Base Specifications PDF document.

Model Upgrade/Downgrade:

Zone	Rank	Vendor	Price	Build File	Options File
Western	Primary	Nationwide Haul LLC	$107,875.00	Build	Options
Northern	Primary	Nationwide Haul LLC	$107,875.00	Build	Options
Central	Primary	Nationwide Haul LLC	$107,875.00	Build	Options
Southern	Primary	Nationwide Haul LLC	$108,875.00	Build	Options

Bid Award

Contract: FSA26-EQU24.0, Equipment

Group: Trailer: Waste Trailer with Walking Floor

Item: 603, Ravens by Kruz Inc., Ravens Live Floor Aluminum S&P Trailer, RALF-48

Description: Refer FSA Base Specifications PDF document.

Model Upgrade/Downgrade:

Zone	Rank	Vendor	Price	Build File	Options File
Western	Primary	DeLand Truck Center, Inc.	$116,614.00	Build	Options
Northern	Primary	DeLand Truck Center, Inc.	$116,614.00	Build	Options
Central	Primary	DeLand Truck Center, Inc.	$116,614.00	Build	Options
Southern	Primary	DeLand Truck Center, Inc.	$116,614.00	Build	Options

Bid Award

Contract: FSA26-EQU24.0, Equipment

Group: Trailer: Waste Trailer with Walking Floor

Item: 604, Steco, AW048102, AW048102

Description: Refer FSA Base Specifications PDF document.

Model Upgrade/Downgrade:

Zone	Rank	Vendor	Price	Build File	Options File
Western	Primary	DeLand Truck Center, Inc.	$119,761.00	Build	Options
Northern	Primary	DeLand Truck Center, Inc.	$119,761.00	Build	Options
Central	Primary	DeLand Truck Center, Inc.	$119,761.00	Build	Options
Southern	Primary	DeLand Truck Center, Inc.	$119,761.00	Build	Options

Bid Award

Contract: FSA26-EQU24.0, Equipment

Group: Trailer: Waste Trailer with Walking Floor

Item: 605, Travis Trailer, TT/WF Classic, TT/WF Classic 48x102

Description: Refer FSA Base Specifications PDF document.

Model Upgrade/Downgrade:

Zone	Rank	Vendor	Price	Build File	Options File
Western	Primary	TRAVIS BODY & TRAILER INC	$105,498.00	Build	Options
Northern	Primary	TRAVIS BODY & TRAILER INC	$106,098.00	Build	Options
Central	Primary	TRAVIS BODY & TRAILER INC	$106,598.00	Build	Options
Southern	Primary	TRAVIS BODY & TRAILER INC	$106,798.00	Build	Options

Bid Award

Contract: FSA26-EQU24.0, Equipment

Group: Trailer: Waste Trailer with Walking Floor

Item: 606, Warren Equipment Inc., WMFT-AS, WMFT-AS-48102

Description: Refer FSA Base Specifications PDF document.

Model Upgrade/Downgrade:

Zone	Rank	Vendor	Price	Build File	Options File
Western	Primary	WARREN EQUIPMENT, INC	$110,000.00	Build	Options
Northern	Primary	WARREN EQUIPMENT, INC	$110,000.00	Build	Options
Central	Primary	WARREN EQUIPMENT, INC	$110,000.00	Build	Options
Southern	Primary	WARREN EQUIPMENT, INC	$110,000.00	Build	Options

Bid Award

Contract: FSA26-EQU24.0, Equipment

Group: Transfer Switch: 600 Amp Automatic Transfer Switch

Item: 607, ABB, ATS 600A 480V N3R Delayed Transition, TAB600-FS

Description: Refer FSA Base Specifications PDF document.

Model Upgrade/Downgrade:

Zone	Rank	Vendor	Price	Build File	Options File
Western	Primary	Tradewinds Power Corp.	$20,497.00	Build	Options
Northern	Primary	Tradewinds Power Corp.	$20,497.00	Build	Options
Central	Primary	Tradewinds Power Corp.	$20,497.00	Build	Options
Southern	Primary	Tradewinds Power Corp.	$20,497.00	Build	Options

Bid Award

Contract: FSA26-EQU24.0, Equipment

Group: Transfer Switch: 600 Amp Automatic Transfer Switch

Item: 608, ASCO, Series 300, Series 300

Description: Refer FSA Base Specifications PDF document.

Model Upgrade/Downgrade:

Zone	Rank	Vendor	Price	Build File	Options File
Western	Primary	MID-FLORIDA DIESEL INC	$6,190.00	Build	Options
	Alternate	ACF Industrial Energy	$7,040.00	Build	Options
	Alternate	Ring Power Corporation	$11,500.00	Build	Options
Northern	Primary	MID-FLORIDA DIESEL INC	$6,190.00	Build	Options
	Alternate	ACF Industrial Energy	$7,040.00	Build	Options
	Alternate	Ring Power Corporation	$11,500.00	Build	Options
Central	Primary	MID-FLORIDA DIESEL INC	$6,190.00	Build	Options
	Alternate	ACF Industrial Energy	$7,040.00	Build	Options
	Alternate	Ring Power Corporation	$11,500.00	Build	Options
Southern	Primary	MID-FLORIDA DIESEL INC	$6,190.00	Build	Options
	Alternate	ACF Industrial Energy	$7,040.00	Build	Options
	Alternate	Tradewinds Power Corp.	$15,628.00	Build	Options

Bid Award

Contract: FSA26-EQU24.0, Equipment

Group: Transfer Switch: 600 Amp Automatic Transfer Switch

Item: 609, Caterpillar, CG, CG

Description: Refer FSA Base Specifications PDF document.

Model Upgrade/Downgrade:

Zone	Rank	Vendor	Price	Build File	Options File
Western	Primary	Ring Power Corporation	$11,800.00	Build	Options
Northern	Primary	Ring Power Corporation	$11,800.00	Build	Options
Central	Primary	Ring Power Corporation	$11,800.00	Build	Options
Southern					

Bid Award

Contract: FSA26-EQU24.0, Equipment

Group: Transfer Switch: 600 Amp Automatic Transfer Switch

Item: 610, EATON, ATS 600A 480V N3R Delayed Transition, TCH600-FS

Description: Refer FSA Base Specifications PDF document.

Model Upgrade/Downgrade:

Zone	Rank	Vendor	Price	Build File	Options File
Western	Primary	Tradewinds Power Corp.	$17,273.00	Build	Options
Northern	Primary	Tradewinds Power Corp.	$17,273.00	Build	Options
Central	Primary	Tradewinds Power Corp.	$17,273.00	Build	Options
Southern	Primary	Tradewinds Power Corp.	$17,273.00	Build	Options

Bid Award

Contract: FSA26-EQU24.0, Equipment

Group: Transfer Switch: 600 Amp Automatic Transfer Switch

Item: 611, Generac, TX/PSTS-600, TX/PSTS-600

Description: Refer FSA Base Specifications PDF document.

Model Upgrade/Downgrade:

Zone	Rank	Vendor	Price	Build File	Options File
Western	Primary	ACF Industrial Energy	$8,675.00	Build	Options
Northern	Primary	ACF Industrial Energy	$8,675.00	Build	Options
Central	Primary	ACF Industrial Energy	$8,675.00	Build	Options
Southern					

Bid Award

Contract: FSA26-EQU24.0, Equipment

Group: Transfer Switch: 600 Amp Automatic Transfer Switch

Item: 612, Thomson, Auto Transfer Switch, TS 870

Description: Refer FSA Base Specifications PDF document.

Model Upgrade/Downgrade:

Zone	Rank	Vendor	Price	Build File	Options File
Western	Primary	Tradewinds Power Corp.	$13,085.00	Build	Options
Northern	Primary	Tradewinds Power Corp.	$13,085.00	Build	Options
Central	Primary	Tradewinds Power Corp.	$13,085.00	Build	Options
Southern	Primary	Tradewinds Power Corp.	$13,058.00	Build	Options

Bid Award

Contract: FSA26-EQU24.0, Equipment

Group: Trencher: Tractor Type

Item: 613, Vermeer, Ride-On Trencher, RTX750

Description: Refer FSA Base Specifications PDF document.

Model Upgrade/Downgrade:

Zone	Rank	Vendor	Price	Build File	Options File
Western	Primary	Vermeer Southeast Sales	$142,404.00	Build	Options
Northern	Primary	Vermeer Southeast Sales	$142,404.00	Build	Options
Central	Primary	Vermeer Southeast Sales	$142,404.00	Build	Options
Southern	Primary	Vermeer Southeast Sales	$142,404.00	Build	Options

Bid Award

Contract: FSA26-EQU24.0, Equipment

Group: Trencher: Walk Behind Trencher

Item: 614, Vermeer, RTX250, RTX250

Description: Refer FSA Base Specifications PDF document.

Model Upgrade/Downgrade:

Zone	Rank	Vendor	Price	Build File	Options File
Western	Primary	Vermeer Southeast Sales	$25,324.00	Build	Options
Northern	Primary	Vermeer Southeast Sales	$25,324.00	Build	Options
Central	Primary	Vermeer Southeast Sales	$25,324.00	Build	Options
Southern	Primary	Vermeer Southeast Sales	$25,324.00	Build	Options

Bid Award

Contract: FSA26-EQU24.0, Equipment

Group: Underground Locating Equipment: Ground Penetrating Radar

Item: 616, US Radar, Quantaum Imager, Q4300

Description: Refer FSA Base Specifications PDF document.

Model Upgrade/Downgrade:

Zone	Rank	Vendor	Price	Build File	Options File
Western	Primary	Vermeer Southeast Sales	$24,615.00	Build	Options
Northern	Primary	Vermeer Southeast Sales	$24,615.00	Build	Options
Central	Primary	Vermeer Southeast Sales	$24,615.00	Build	Options
Southern	Primary	Vermeer Southeast Sales	$24,615.00	Build	Options

Bid Award

Contract: FSA26-EQU24.0, Equipment

Group: Underground Locating Equipment: Utility Locator

Item: 617, Vermeer, Verifier G-3, G-3

Description: Refer FSA Base Specifications PDF document.

Model Upgrade/Downgrade:

Zone	Rank	Vendor	Price	Build File	Options File
Western	Primary	Vermeer Southeast Sales	$6,222.00	Build	Options
Northern	Primary	Vermeer Southeast Sales	$6,222.00	Build	Options
Central	Primary	Vermeer Southeast Sales	$6,222.00	Build	Options
Southern	Primary	Vermeer Southeast Sales	$6,222.00	Build	Options

Bid Award

Contract: FSA26-EQU24.0, Equipment

Group: Vehicle Lift: Above Ground - 2 Post Asymmetric Stationary Vehicle Lift 10k

Item: 619, Challenger, SA10, SA10

Description: Refer FSA Base Specifications PDF document.

Model Upgrade/Downgrade:

Zone	Rank	Vendor	Price	Build File	Options File
Western	Primary	JOBBERS EQUIPMENT WAREHOUSE INC	$6,879.00	Build	Options
Northern	Primary	JOBBERS EQUIPMENT WAREHOUSE INC	$6,879.00	Build	Options
Central	Primary	JOBBERS EQUIPMENT WAREHOUSE INC	$6,879.00	Build	Options
Southern	Primary	JOBBERS EQUIPMENT WAREHOUSE INC	$6,879.00	Build	Options

Bid Award

Contract: FSA26-EQU24.0, Equipment

Group: Vehicle Lift: Above Ground - 2 Post Symmetric Stationary Vehicle Lift 12k

Item: 621, Challenger, CL12A-LC, CL12A-LC

Description: Refer FSA Base Specifications PDF document.

Model Upgrade/Downgrade:

Zone	Rank	Vendor	Price	Build File	Options File
Western	Primary	JOBBERS EQUIPMENT WAREHOUSE INC	$14,054.00	Build	Options
Northern	Primary	JOBBERS EQUIPMENT WAREHOUSE INC	$14,054.00	Build	Options
Central	Primary	JOBBERS EQUIPMENT WAREHOUSE INC	$14,054.00	Build	Options
Southern	Primary	JOBBERS EQUIPMENT WAREHOUSE INC	$14,054.00	Build	Options

Bid Award

Contract: FSA26-EQU24.0, Equipment

Group: Vehicle Lift: Above Ground - 2 Post Symmetric Stationary Vehicle Lift 15k

Item: 622, Challenger, CL16-3S, CL16-3S

Description: Refer FSA Base Specifications PDF document.

Model Upgrade/Downgrade:

Zone	Rank	Vendor	Price	Build File	Options File
Western	Primary	JOBBERS EQUIPMENT WAREHOUSE INC	$29,465.00	Build	Options
Northern	Primary	JOBBERS EQUIPMENT WAREHOUSE INC	$29,465.00	Build	Options
Central	Primary	JOBBERS EQUIPMENT WAREHOUSE INC	$29,465.00	Build	Options
Southern	Primary	JOBBERS EQUIPMENT WAREHOUSE INC	$29,465.00	Build	Options

Bid Award

Contract: FSA26-EQU24.0, Equipment

Group: Vehicle Lift: Above Ground - 2 Post Symmetric Stationary Vehicle Lift 18k

Item: 625, Challenger, CL20, CL20

Description: Refer FSA Base Specifications PDF document.

Model Upgrade/Downgrade:

Zone	Rank	Vendor	Price	Build File	Options File
Western	Primary	JOBBERS EQUIPMENT WAREHOUSE INC	$35,699.00	Build	Options
Northern	Primary	JOBBERS EQUIPMENT WAREHOUSE INC	$35,699.00	Build	Options
Central	Primary	JOBBERS EQUIPMENT WAREHOUSE INC	$35,699.00	Build	Options
Southern	Primary	JOBBERS EQUIPMENT WAREHOUSE INC	$35,699.00	Build	Options

Bid Award

Contract: FSA26-EQU24.0, Equipment

Group: Vehicle Lift: Above Ground - 2 Post Versymmetric Stationary Vehicle Lift 10k

Item: 628, Challenger, CL10V3, CL10V3

Description: Refer FSA Base Specifications PDF document.

Model Upgrade/Downgrade:

Zone	Rank	Vendor	Price	Build File	Options File
Western	Primary	JOBBERS EQUIPMENT WAREHOUSE INC	$9,124.00	Build	Options
Northern	Primary	JOBBERS EQUIPMENT WAREHOUSE INC	$9,124.00	Build	Options
Central	Primary	JOBBERS EQUIPMENT WAREHOUSE INC	$9,124.00	Build	Options
Southern	Primary	JOBBERS EQUIPMENT WAREHOUSE INC	$9,124.00	Build	Options

Bid Award

Contract: FSA26-EQU24.0, Equipment

Group: Vehicle Lift: Above Ground - 4 Column, Alignment Lift with Front/Rear Jacks and Integrated Turntables and Slip Plates 14k

Item: 629, Challenger, AR4115XAO, AR4115XAO

Description: Refer FSA Base Specifications PDF document.

Model Upgrade/Downgrade:

Zone	Rank	Vendor	Price	Build File	Options File
Western	Primary	JOBBERS EQUIPMENT WAREHOUSE INC	$37,771.00	Build	Options
Northern	Primary	JOBBERS EQUIPMENT WAREHOUSE INC	$37,771.00	Build	Options
Central	Primary	JOBBERS EQUIPMENT WAREHOUSE INC	$37,771.00	Build	Options
Southern	Primary	JOBBERS EQUIPMENT WAREHOUSE INC	$37,771.00	Build	Options

Bid Award

Contract: FSA26-EQU24.0, Equipment

Group: Vehicle Lift: Above Ground - 4 Post Alignment Lift with Turnplates and Rolling Jack 30k

Item: 631, Challenger, 4030 Series, 4030EFX

Description: Refer FSA Base Specifications PDF document.

Model Upgrade/Downgrade:

Zone	Rank	Vendor	Price	Build File	Options File
Western	Primary	JOBBERS EQUIPMENT WAREHOUSE INC	$77,076.00	Build	Options
Northern	Primary	JOBBERS EQUIPMENT WAREHOUSE INC	$77,076.00	Build	Options
Central	Primary	JOBBERS EQUIPMENT WAREHOUSE INC	$77,076.00	Build	Options
Southern	Primary	JOBBERS EQUIPMENT WAREHOUSE INC	$77,076.00	Build	Options

Bid Award

Contract: FSA26-EQU24.0, Equipment

Group: Vehicle Lift: Above Ground Drive On Platform Lift, Pantograph Type

Item: 633, ARI-HETRA, HDPL Drive-On Platform Lift, HDPL-77-30

Description: Refer FSA Base Specifications PDF document.

Model Upgrade/Downgrade:

Zone	Rank	Vendor	Price	Build File	Options File
Western	Primary	ARI Phoenix, Inc.	$153,668.00	Build	Options
Northern	Primary	ARI Phoenix, Inc.	$153,668.00	Build	Options
Central	Primary	ARI Phoenix, Inc.	$153,668.00	Build	Options
Southern	Primary	ARI Phoenix, Inc.	$153,668.00	Build	Options

Bid Award

Contract: FSA26-EQU24.0, Equipment

Group: Vehicle Lift: In Ground Drive On Platform Lift, Scissor Type

Item: 634, ARI-HETRA, HDXL Drive-On Scissor Lift, HDXL-912

Description: Refer FSA Base Specifications PDF document.

Model Upgrade/Downgrade:

Zone	Rank	Vendor	Price	Build File	Options File
Western	Primary	ARI Phoenix, Inc.	$123,790.00	Build	Options
Northern	Primary	ARI Phoenix, Inc.	$123,790.00	Build	Options
Central	Primary	ARI Phoenix, Inc.	$123,790.00	Build	Options
Southern	Primary	ARI Phoenix, Inc.	$123,790.00	Build	Options

Bid Award

Contract: FSA26-EQU24.0, Equipment

Group: Vehicle Lift: Mobile - 2 Column, Cabled

Item: 635, ARI-HETRA, LP-10-2-AJ, LP-10-2-AJ

Description: Refer FSA Base Specifications PDF document.

Model Upgrade/Downgrade:

Zone	Rank	Vendor	Price	Build File	Options File
Western	Primary	ARI Phoenix, Inc.	$29,115.00	Build	Options
Northern	Primary	ARI Phoenix, Inc.	$29,115.00	Build	Options
Central	Primary	ARI Phoenix, Inc.	$29,115.00	Build	Options
Southern	Primary	ARI Phoenix, Inc.	$29,115.00	Build	Options

Bid Award

Contract: FSA26-EQU24.0, Equipment

Group: Vehicle Lift: Mobile - 2 Column, Cabled

Item: 636, Stertil-Koni, ST-1085-1FSA, ST-1085-1FSA

Description: Refer FSA Base Specifications PDF document.

Model Upgrade/Downgrade:

Zone	Rank	Vendor	Price	Build File	Options File
Western	Primary	Federal Contracts LLC DBA Federal Contracts Company	$39,140.00	Build	Options
Northern	Primary	Federal Contracts LLC DBA Federal Contracts Company	$39,140.00	Build	Options
Central	Primary	Federal Contracts LLC DBA Federal Contracts Company	$39,140.00	Build	Options
Southern	Primary	Federal Contracts LLC DBA Federal Contracts Company	$39,140.00	Build	Options

Bid Award

Contract: FSA26-EQU24.0, Equipment

Group: Vehicle Lift: Mobile - 2 Column, Wireless

Item: 637, ARI-HETRA, BPW-10-2-AJ, BPW-10-2-AJ

Description: Refer FSA Base Specifications PDF document.

Model Upgrade/Downgrade:

Zone	Rank	Vendor	Price	Build File	Options File
Western	Primary	ARI Phoenix, Inc.	$29,948.00	Build	Options
Northern	Primary	ARI Phoenix, Inc.	$29,948.00	Build	Options
Central	Primary	ARI Phoenix, Inc.	$29,948.00	Build	Options
Southern	Primary	ARI Phoenix, Inc.	$29,948.00	Build	Options

Bid Award

Contract: FSA26-EQU24.0, Equipment

Group: Vehicle Lift: Mobile - 2 Column, Wireless

Item: 638, Challenger, CLHM-190-2, CLHM-190-2

Description: Refer FSA Base Specifications PDF document.

Model Upgrade/Downgrade:

Zone	Rank	Vendor	Price	Build File	Options File
Western	Primary	JOBBERS EQUIPMENT WAREHOUSE INC	$30,441.00	Build	Options
Northern	Primary	JOBBERS EQUIPMENT WAREHOUSE INC	$30,441.00	Build	Options
Central	Primary	JOBBERS EQUIPMENT WAREHOUSE INC	$30,441.00	Build	Options
Southern	Primary	JOBBERS EQUIPMENT WAREHOUSE INC	$30,441.00	Build	Options

Bid Award

Contract: FSA26-EQU24.0, Equipment

Group: Vehicle Lift: Mobile - 2 Column, Wireless

Item: 639, Stertil-Koni, ST-1085-1FWA, ST-1085-1FWA

Description: Refer FSA Base Specifications PDF document.

Model Upgrade/Downgrade:

Zone	Rank	Vendor	Price	Build File	Options File
Western	Primary	Federal Contracts LLC DBA Federal Contracts Company	$44,317.00	Build	Options
Northern	Primary	Federal Contracts LLC DBA Federal Contracts Company	$44,317.00	Build	Options
Central	Primary	Federal Contracts LLC DBA Federal Contracts Company	$44,317.00	Build	Options
Southern	Primary	Federal Contracts LLC DBA Federal Contracts Company	$44,317.00	Build	Options

Bid Award

Contract: FSA26-EQU24.0, Equipment

Group: Vehicle Lift: Mobile - 4 Column, Cabled

Item: 640, ARI-HETRA, LP-10-4-AJ, LP-10-4-AJ

Description: Refer FSA Base Specifications PDF document.

Model Upgrade/Downgrade:

Zone	Rank	Vendor	Price	Build File	Options File
Western	Primary	ARI Phoenix, Inc.	$57,329.00	Build	Options
Northern	Primary	ARI Phoenix, Inc.	$57,329.00	Build	Options
Central	Primary	ARI Phoenix, Inc.	$57,329.00	Build	Options
Southern	Primary	ARI Phoenix, Inc.	$57,329.00	Build	Options

Bid Award

Contract: FSA26-EQU24.0, Equipment

Group: Vehicle Lift: Mobile - 4 Column, Cabled

Item: 641, Stertil-Koni, ST-1085-2FSA, ST-1085-2FSA

Description: Refer FSA Base Specifications PDF document.

Model Upgrade/Downgrade:

Zone	Rank	Vendor	Price	Build File	Options File
Western	Primary	Federal Contracts LLC DBA Federal Contracts Company	$73,217.00	Build	Options
Northern	Primary	Federal Contracts LLC DBA Federal Contracts Company	$73,217.00	Build	Options
Central	Primary	Federal Contracts LLC DBA Federal Contracts Company	$73,217.00	Build	Options
Southern	Primary	Federal Contracts LLC DBA Federal Contracts Company	$73,217.00	Build	Options

Bid Award

Contract: FSA26-EQU24.0, Equipment

Group: Vehicle Lift: Mobile - 4 Column, Wireless

Item: 642, ARI-HETRA, BPW-10-4-AJ, BPW-10-4-AJ

Description: Refer FSA Base Specifications PDF document.

Model Upgrade/Downgrade:

Zone	Rank	Vendor	Price	Build File	Options File
Western	Primary	ARI Phoenix, Inc.	$60,570.00	Build	Options
Northern	Primary	ARI Phoenix, Inc.	$60,570.00	Build	Options
Central	Primary	ARI Phoenix, Inc.	$60,570.00	Build	Options
Southern	Primary	ARI Phoenix, Inc.	$60,570.00	Build	Options

Bid Award

Contract: FSA26-EQU24.0, Equipment

Group: Vehicle Lift: Mobile - 4 Column, Wireless

Item: 643, Challenger, CLHM-190-4, CLHM-190-4

Description: Refer FSA Base Specifications PDF document.

Model Upgrade/Downgrade:

Zone	Rank	Vendor	Price	Build File	Options File
Western	Primary	JOBBERS EQUIPMENT WAREHOUSE INC	$60,882.00	Build	Options
Northern	Primary	JOBBERS EQUIPMENT WAREHOUSE INC	$60,882.00	Build	Options
Central	Primary	JOBBERS EQUIPMENT WAREHOUSE INC	$60,882.00	Build	Options
Southern	Primary	JOBBERS EQUIPMENT WAREHOUSE INC	$60,882.00	Build	Options

Bid Award

Contract: FSA26-EQU24.0, Equipment

Group: Vehicle Lift: Mobile - 4 Column, Wireless

Item: 644, Stertil-Koni, ST-1085-2FWA, ST-1085-2FWA

Description: Refer FSA Base Specifications PDF document.

Model Upgrade/Downgrade:

Zone	Rank	Vendor	Price	Build File	Options File
Western	Primary	Federal Contracts LLC DBA Federal Contracts Company	$85,610.00	Build	Options
Northern	Primary	Federal Contracts LLC DBA Federal Contracts Company	$85,610.00	Build	Options
Central	Primary	Federal Contracts LLC DBA Federal Contracts Company	$85,610.00	Build	Options
Southern	Primary	Federal Contracts LLC DBA Federal Contracts Company	$85,610.00	Build	Options

Bid Award

Contract: FSA26-EQU24.0, Equipment

Group: Vehicle Lift: Mobile - 6 Column, Cabled

Item: 645, ARI-HETRA, LP-10-6-AJ, LP-10-6-AJ

Description: Refer FSA Base Specifications PDF document.

Model Upgrade/Downgrade:

Zone	Rank	Vendor	Price	Build File	Options File
Western	Primary	ARI Phoenix, Inc.	$85,544.00	Build	Options
Northern	Primary	ARI Phoenix, Inc.	$85,544.00	Build	Options
Central	Primary	ARI Phoenix, Inc.	$85,544.00	Build	Options
Southern	Primary	ARI Phoenix, Inc.	$85,544.00	Build	Options

Bid Award

Contract: FSA26-EQU24.0, Equipment

Group: Vehicle Lift: Mobile - 6 Column, Cabled

Item: 646, Stertil-Koni, ST-1085-3FSA, ST-1085-3FSA

Description: Refer FSA Base Specifications PDF document.

Model Upgrade/Downgrade:

Zone	Rank	Vendor	Price	Build File	Options File
Western	Primary	Federal Contracts LLC DBA Federal Contracts Company	$107,287.00	Build	Options
Northern	Primary	Federal Contracts LLC DBA Federal Contracts Company	$107,287.00	Build	Options
Central	Primary	Federal Contracts LLC DBA Federal Contracts Company	$107,287.00	Build	Options
Southern	Primary	Federal Contracts LLC DBA Federal Contracts Company	$107,287.00	Build	Options

Bid Award

Contract: FSA26-EQU24.0, Equipment

Group: Vehicle Lift: Mobile - 6 Column, Wireless

Item: 647, ARI-HETRA, BPW-10-6-AJ, BPW-10-6-AJ

Description: Refer FSA Base Specifications PDF document.

Model Upgrade/Downgrade:

Zone	Rank	Vendor	Price	Build File	Options File
Western	Primary	ARI Phoenix, Inc.	$90,861.00	Build	Options
Northern	Primary	ARI Phoenix, Inc.	$90,861.00	Build	Options
Central	Primary	ARI Phoenix, Inc.	$90,861.00	Build	Options
Southern	Primary	ARI Phoenix, Inc.	$90,861.00	Build	Options

Bid Award

Contract: FSA26-EQU24.0, Equipment

Group: Vehicle Lift: Mobile - 6 Column, Wireless

Item: 648, Challenger, CLHM-190-6, CLHM-190-6

Description: Refer FSA Base Specifications PDF document.

Model Upgrade/Downgrade:

Zone	Rank	Vendor	Price	Build File	Options File
Western	Primary	JOBBERS EQUIPMENT WAREHOUSE INC	$91,323.00	Build	Options
Northern	Primary	JOBBERS EQUIPMENT WAREHOUSE INC	$91,323.00	Build	Options
Central	Primary	JOBBERS EQUIPMENT WAREHOUSE INC	$91,323.00	Build	Options
Southern	Primary	JOBBERS EQUIPMENT WAREHOUSE INC	$91,323.00	Build	Options

Bid Award

Contract: FSA26-EQU24.0, Equipment

Group: Vehicle Lift: Mobile - 6 Column, Wireless

Item: 649, Stertil-Koni, ST-1085-3FWA, ST-1085-3FWA

Description: Refer FSA Base Specifications PDF document.

Model Upgrade/Downgrade:

Zone	Rank	Vendor	Price	Build File	Options File
Western	Primary	Federal Contracts LLC DBA Federal Contracts Company	$126,904.00	Build	Options
Northern	Primary	Federal Contracts LLC DBA Federal Contracts Company	$126,904.00	Build	Options
Central	Primary	Federal Contracts LLC DBA Federal Contracts Company	$126,904.00	Build	Options
Southern	Primary	Federal Contracts LLC DBA Federal Contracts Company	$126,904.00	Build	Options

Bid Award

Contract: FSA26-EQU24.0, Equipment

Group: Vehicle Lift: Mobile - 8 Column, Wireless

Item: 650, ARI-HETRA, BPW-10-8-AJ, BPW-10-8-AJ

Description: Refer FSA Base Specifications PDF document.

Model Upgrade/Downgrade:

Zone	Rank	Vendor	Price	Build File	Options File
Western	Primary	ARI Phoenix, Inc.	$121,139.00	Build	Options
Northern	Primary	ARI Phoenix, Inc.	$121,139.00	Build	Options
Central	Primary	ARI Phoenix, Inc.	$121,139.00	Build	Options
Southern	Primary	ARI Phoenix, Inc.	$121,139.00	Build	Options

Bid Award

Contract: FSA26-EQU24.0, Equipment

Group: Vehicle Lift: Mobile - 8 Column, Wireless

Item: 651, Challenger, CLHM-190-8, CLHM-190-8

Description: Refer FSA Base Specifications PDF document.

Model Upgrade/Downgrade:

Zone	Rank	Vendor	Price	Build File	Options File
Western	Primary	JOBBERS EQUIPMENT WAREHOUSE INC	$121,764.00	Build	Options
Northern	Primary	JOBBERS EQUIPMENT WAREHOUSE INC	$121,764.00	Build	Options
Central	Primary	JOBBERS EQUIPMENT WAREHOUSE INC	$121,764.00	Build	Options
Southern	Primary	JOBBERS EQUIPMENT WAREHOUSE INC	$121,764.00	Build	Options

FSA Cooperative Purchasing Program



FSA26-EQU24.0: Equipment Terms and Conditions

Contents

1.0 GENERAL CONDITIONS 5
1.01 BID CORRESPONDENCE 5
1.02 PURPOSE 5
1.03 TERM OF CONTRACT 5
1.04 JURISDICTION 5
1.05 SHERIFF AS COUNTY CONSTITUTIONAL OFFICER 6
1.06 FUNDING 6
1.07 CURRENCY 6
1.08 GENERAL DEFINITION 6
1.09 ELIGIBLE PURCHASERS OF CONTRACT 8
1.10 LEGAL REQUIREMENTS 8
1.11 PATENTS & ROYALTIES 9
1.12 FEDERAL AND STATE STANDARDS 9
1.13 UNDERWRITERS' LABORATORIES 9
1.14 AMERICANS WITH DISABILITIES ACT 10
1.15 REASONABLE ACCOMMODATION 10
1.16 DISADVANTAGED BUSINESSES 10
1.17 ANTI-DISCRIMINATION, E-VERIFY, AND ANTI-HUMAN TRAFFICKING REQUIREMENTS 10
1.18 BEST COMMERCIAL PRACTICES 11
1.19 PUBLIC ENTITY CRIMES ("PEC") AND SCRUTINIZED COMPANIES STATEMENTS 11
1.20 TAX EXEMPTION 12
1.21 ORDER OF PRECEDENCE IN THE EVENT OF CONFLICT 12
1.22 COMMUNICATIONS 12
1.23 CLARIFICATION AND ADDENDA 13
1.24 SIGNED BID CONSIDERED AN OFFER 13
1.25 ASSIGNMENT OF CONTRACT 13
1.26 TERMINATION OF PRODUCT LINE 14
1.27 DEMONSTRATION OF COMPETENCY 14
1.28 VENDOR ABILITY TO PERFORM 14
1.29 FINANCIAL RESPONSIBILITY 15
1.30 QUALITY AND SAFETY 15
1.31 NONCONFORMANCE 16
1.32 GRATUITIES 16
1.33 NEUTRALITY 16

1.34 TIE BIDS 16
1.35 RIGHT TO AUDIT 17
1.37 PERFORMANCE BONDS 18
1.38 ELIMINATION FROM CONSIDERATION 18
1.39 INDEPENDENT PREPARATION 18
1.40 DEFAULT 19
1.41 PROTESTS AND ARBITRATION 19
1.42 NONPERFORMANCE 20
1.43 SEVERABILITY 21
1.44 TERMINATION FOR CAUSE 21
1.45 TERMINATION WITHOUT CAUSE 22
1.46 CONTRACT ADVERTISEMENT AND USE OF THE FSA CPP LOGO 22
2.0 BIDDER INSTRUCTIONS 23
2.01 QUALIFICATION 23
2.02 LICENSING AND FACILITIES 23
2.03 INSURANCE AND INDEMNIFICATION 24
2.04 SPECIFICATIONS 26
2.05 SEALED BIDS 26
2.06 MISTAKES 27
2.07 EXCEPTIONS 27
2.08 EQUIVALENTS 27
2.09 MANDATORY PRE-BID MEETING 27
2.10 PRICES QUOTED 27
2.11 OPTION PRICING 28
2.12 BID SUBMISSION 29
2.13 ZONE BIDDING 30
2.14 EXECUTION OF BID 30
2.15 MODIFICATION OR WITHDRAWALS OF BIDS 30
2.16 LATE BIDS 31
2.17 BID OPENING 31
2.18 DETERMINATION OF RESPONSIVENESS 31
2.19 RESPONSIBLE BIDDER CRITERIA 31
2.20 BASIS FOR AWARD 32
2.21 BID TABULATIONS 32
2.22 MINOR IRREGULARITIES/RIGHT TO REJECT 32

2.23 CONE OF SILENCE 33
3.0 CONTRACT CONDITIONS 33
3.01 GENERAL REQUIREMENTS 33
3.02 STATEMENT OF AUTHORITY 33
3.03 VENDOR CONTACT INFORMATION 33
3.04 ADDITIONS OR DELETIONS 33
3.05 CONTRACT EXTENSION 34
3.06 PRICE ADJUSTMENT 34
3.07 CONDITIONS 35
3.08 PRODUCTION CUTOFF 35
3.09 FACILITIES 36
3.10 FACTORY-INSTALLED OPTIONS 36
3.11 VENDOR-INSTALLED OPTIONS 36
3.12 NON-SCHEDULED OPTIONS 36
3.13 FORCE MAJEURE 36
3.14 PARTS 37
3.15 PURCHASE ORDERS 37
3.16 DELIVERY 38
3.17 INSPECTION AND ACCEPTANCE 39
3.18 INVOICING AND PAYMENTS 39
3.19 WARRANTY 39
3.20 QUARTERLY REPORTS 40
3.21 ADMINISTRATIVE FEE 41
3.22 LIQUIDATED DAMAGES 41
Appendix A: Zone Map 43
Appendix B: Bid Calendar 44
Appendix C: ACH Payments 45
Appendix D: Federal Clause 46

1.0 GENERAL CONDITIONS

1.01 BID CORRESPONDENCE

All correspondence regarding this bid should be directed to the Florida Sheriffs Association ("FSA"). Please be sure to reference the bid number and title and provide your contact information. Communication for this Invitation to Bid should be identified by Contract number and title and directed to:

Florida Sheriffs Association
Attn: Cooperative Purchasing Program Coordinator
2617 Mahan Drive
Tallahassee, FL 32308
E-mail: CPP@flsheriffs.org

1.02 PURPOSE

The Florida Sheriffs Association invites interested bidders, including Manufacturers and Dealers or authorized representatives (each a "Bidder" and together, "Bidders"), to submit responses in accordance with these solicitation documents for Bid FSA26-EQU24.0 Equipment. The FSA Cooperative Purchasing Program will conduct the solicitation process and administer the resulting Contract. The purpose of this bid is to establish Contracts with Manufacturers and Manufacturer's authorized Dealers for Contract terms specified under Section 1.03 for the purchase of items on a "no trade-in basis."

1.03 TERM OF CONTRACT

The term for Contract FSA26-EQU24.0 Equipment ("Contract" or "Agreement") shall remain in effect for two years from date of Contract execution by the FSA, and may be extended by mutual agreement, at the sole option and discretion of the FSA. The initial term of this Contract begins October 1, 2026, and ends September 30, 2028.

Contract extensions will only be executed when the FSA determines, based on then-existing conditions, that it is in the best interest of the FSA and the Purchasers to do so.

1.04 JURISDICTION

This Agreement and the provisions contained herein shall be governed by and interpreted and construed in accordance with the laws of the State of Florida. Each party consents that the venue for any litigation arising out of or related to this Agreement shall lie in the appropriate court in and for Leon County, Florida.

1.05 SHERIFF AS COUNTY CONSTITUTIONAL OFFICER

The Offices of the Sheriff in the State of Florida are constitutional offices of the State of Florida. Each has the authority either individually or collectively to execute Contracts for all goods and services for the proper conduct of that office. Section 30.53, Florida Statutes, exempts the sheriffs' offices from the provisions of the Florida Statutes that would otherwise require sealed and competitive bidding procedures "concerning the purchase and procurement of supplies and equipment, selection of personnel, and the hiring, firing, and setting of salaries of such personnel."
The Office of the Sheriff is not required by law to accept the lowest priced proposal and may reject any or all of the proposals without recourse. Bidders are solely responsible for their own bid preparation costs and nothing in this solicitation in any way obligates the participating sheriffs' offices for any payment for any activity or costs incurred by any Bidder in responding to this solicitation.

1.06 FUNDING

In the case of certain Purchasers, including state agencies, funds expended for the purposes of a contract must be appropriated by the Florida Legislature, the individual Purchaser or the Purchaser's appropriating authority for each fiscal year included within the Contract period. For such Purchasers, their performances, and obligations to pay for products or services under any resulting contract or Purchase Order, including this Contract, are contingent upon such an annual appropriation by the Legislature, individual Purchaser or by the appropriating authority. Therefore, any Contract or Purchase Order, including this Contract, with such a Purchaser shall automatically terminate without penalty or termination costs in the event of non-appropriation.

1.07 CURRENCY

All transaction amounts, bids, quotes, provisions, payments, or any part of this Contract relating to currency are to be made in United States Dollars.

1.08 GENERAL DEFINITION

The terms used in this Contract are defined as the following:

A. Bidder: A business or enterprise that submits a formal bid to the Florida Sheriffs Association Cooperative Purchasing Program in accordance with these Terms and Conditions. A bidder, which is not the Manufacturer, must be authorized by the Manufacturer to market and sell an item for which they are bidding.
B. Bid System: The online forum used for the submission of bids and review of bid results for the specifications connected to this Invitation to Bid. VendorLink is the software used for this bid.
C. Build Sheet: A document from the Bidder that confirms that the item submitted meets or exceeds the FSA Base Specifications. Build Sheets include, but are not limited to, the factory options list and door data plate information which may include details such as engine size and transmission, paint codes, production date, axle code, etc.

D. Dealer: An enterprise authorized by the Manufacturer to market, sell, provide, and service the items for the Florida Sheriffs Association Cooperative Purchasing Program. Dealers may be Vendor-owned and controlled, in whole or in part, or independently owned and controlled.
E. End User: A term used to distinguish the person who ultimately uses or is intended to use a product or for whom a product is designed for use.
F. Factory: Refers to the Manufacturer produced products.
G. Fleet Advisory Committee ("Committee"): An employee of a sheriff's office or other local governmental agency, or person who the FSA CPP identifies as a subject matter expert who assists with the development of bid specifications and evaluation of bid responses. The Committee makes recommendations to the FSA CPP but is not responsible for final awards.
H. Florida Sheriffs Association ("FSA"): A Florida not-for-profit corporation that is tax-exempt under Section 501(c)(3) of the Internal Revenue Code, with its principal office in Tallahassee, Florida.
I. Florida Sheriffs Association Cooperative Purchasing Program ("FSA CPP"): The entity that administers the Invitation to Bid and contract administration functions for the resulting Contract(s).
J. FSA Base Specifications: Written descriptions of the minimum requirements for each item or item group developed by the FSA CPP for Bidders to bid on. These item requirements may be unique to the FSA CPP and require additional components to the Manufacturer's standard item.
K. Invitation to Bid: A competitive solicitation and award process established through the issuance of an invitation to Bidders, Vendors, Dealers and Manufacturers to submit a price offer on a specific product to be provided. This term shall include the FSA Base Specifications available to Bidders on the Bid System and references to solicitation documents. The term shall not include requests for proposals, requests for quotes, requests for letters of interest, or purchase orders based on oral or written quotations.
L. Manufacturer: The original producer or provider of items offered on this Contract.
M. Manufacturer's Suggested Retail Price ("MSRP"): The Manufacturer's recommended retail selling price, list price, published list price, or other usual and customary price that would be paid by the Purchaser. The following are acceptable sources of current MSRPs and MSRP Lists for use in submission of the bid solicitation and the resulting Contract:
    a. Manufacturer's Computer Printouts
    b. Manufacturer's Annual U.S. Price Book
    c. Manufacturer's official website
N. Non-Scheduled Option: Any optional new or unused component, feature or configuration that is not included or listed in the FSA Base Specifications or options provided by the Vendor.
O. Production Cutoff: A date used by Manufacturers to notify Vendors and Dealers that the Manufacturer has reached maximum capacity for orders or is discontinuing the production of an item. Manufacturers use this term when referring to any given model year for production.
P. Published List Price: A standard "quantity of one" price currently available to government and educational Purchasers, excluding cooperative or volume discounts.
Q. Purchase Order: An official request for order from a Purchaser to an awarded Vendor for an item that has been awarded on this Contract. Purchase Orders placed using this Contract formalize the Terms and Conditions of this Contract under which a Vendor furnishes items to a Purchaser.
R. Purchaser: An entity that seeks to obtain items awarded on this Contract by meeting the eligible user criteria.
S. Qualifications Packet: This packet contains the required forms, attestations, authorizations, and organizational information needed by Bidders to qualify.
T. Terms and Conditions: This document, which serves as the governing Invitation to Bid and

Contract for the identified FSA CPP Invitation to Bid and resulting contract(s). Standard regulations, processes, procedures, and compliance requirements are identified herein. Bidders complete a Qualifications Packet during the bid process indicating they agree to comply with the Terms and Conditions, and that this will serve as the Contract for both parties, should the Bidder(s) receive award. Bidder must respond to the Contract Signature Form affirming acceptance of the Terms and Conditions, which will serve as the Contract for both parties, should the Bidder receive an award.

U. Third Party Supplier: Businesses external to a Bidder or Vendor that provide products and services which contribute to the overall finished item in this Contract. Third Party Suppliers are contractors and/or Subcontractors under the direction and responsibility of the Bidder or Vendor.
V. Vendor: The Bidder(s) that receive award, who agree to provide the Contract items that meet the requirements and FSA Base Specifications of the Contract. The Vendor must agree to the Terms and Conditions, which will serve as the governing Contract. If the Vendor is not the Manufacturer, the Vendor must be authorized by the Manufacturer to market, sell, provide, and service all awarded items.
W. Vendor Installed: A product or service provided by the Vendor or other third party; not the factory.

1.09 ELIGIBLE PURCHASERS OF CONTRACT

Awarded bid Contract pricing, will be extended and guaranteed to the Florida Sheriffs Association, any unit of local government, political subdivision, or agency of the State of Florida("State"). This includes, but is not limited to counties, municipalities, sheriffs' offices, clerks, property appraisers, tax collectors, supervisors of elections, school boards or districts, water management districts, other special districts, police and fire departments, emergency response units, state universities and colleges, or other state, local or regional government entities within the State of Florida. Eligible Purchaser also includes all Eligible Users as defined in Rule 60A-1.001(4) Florida Administrative Code ("F.A.C.").

All Purchasers are bound by applicable Federal and State law, local ordinances, rules, and regulations for purchases made under this Contract. Participating agencies cannot guarantee any order other than those ordered by the individual agency.

In addition, awarded bids can be extended and guaranteed to other entities, which can include out-of-state sales, in accordance with Vendors' individual Manufacturers' agreements. Vendors that wish to extend the Contract pricing to entities other than those defined here are governed by their Manufacturers' agreements and must agree to the Terms and Conditions.

1.10 LEGAL REQUIREMENTS

Federal, State, and local laws, ordinances, rules, and regulations, including any applicable motor vehicle dealer laws, that in any manner affect the items covered herein apply to this Contract and all services, work, materials, and supplies provided by Vendor in order to fulfill its obligations under this Contract. Lack of knowledge by the Bidder of applicable legal requirements will in no way be a cause for relief from responsibility.

Bidders have the option to certify that they are willing to accept Purchase Orders funded in whole or in part with Federal funds. By opting in, Bidders certify that they are willing to comply with the requirements outlined in Appendix D upon receipt of a federally funded Purchase Order. This is not a requirement of the Invitation to Bid or Contract. Bidders are not required to opt-in; however, they are required to indicate whether they will opt-in or opt-out of receiving Federally funded Purchase Orders. The FSA CPP has taken actions to provide and develop information, materials, and resources for Bidders, Vendors and Purchasers that will assist in the use of Federal funding with this Contract for Purchasers that use Federal funds for purchase or intend to request reimbursements using Federal funds.

1.11 PATENTS & ROYALTIES

The Vendor, without exception, shall indemnify and hold harmless the Florida Sheriffs Association ("FSA") and its employees from liability of any nature or kind, including costs and expenses for, or on account of, any copyrighted, patented, or unpatented invention, process, or article manufactured or used in the performance of the Contract, including its use by the FSA or a Purchaser or an End User.

If the Bidder uses any design, device or materials covered by letters, patent, or copyright, it is mutually understood and agreed, without exception, that the bid prices shall include all royalties or costs in any way arising, directly or indirectly, from the use of such design, device, or materials in any way involved in the work.

1.12 FEDERAL AND STATE STANDARDS

It is the intent of the FSA CPP that all specifications herein are in full and complete compliance with all Federal and State of Florida laws, requirements, and regulations applicable to the type and class of commodities and contractual services being provided.

In addition, any applicable Federal or State legal or regulatory requirements that become effective during the term of the Terms and Conditions, regarding the items and services specifications, safety, and environmental requirements shall immediately become a part of the Terms and Conditions. The Vendor shall meet or exceed any such requirements of the laws and regulations. If an apparent conflict exists, the Vendor shall contact the FSA CPP immediately.

1.13 UNDERWRITERS' LABORATORIES

Unless otherwise stipulated in the bid, all manufactured items and fabricated assemblies shall be Underwriters' Laboratories, or U.L., listed or re-examination listing where such has been established by U.L. for the item(s) offered and furnished.

1.14 AMERICANS WITH DISABILITIES ACT

To request this material in accessible format, sign language interpreters, information on access for persons with disabilities, or any accommodation to review any document or participate in any FSA sponsored proceeding, please contact FSA Human Resources at (850) 877-2165 five (5) business days in advance to initiate your request. TTY users may also call the Florida Relay Service at 711.

1.15 REASONABLE ACCOMMODATION

In accordance with the Title II of the Americans with Disabilities Act, any person requiring an accommodation because of a disability at the bid opening must contact the FSA Human Resources at (850) 877-2165.

1.16 DISADVANTAGED BUSINESSES

As part of the solicitation process the FSA CPP makes information publicly available to potentially qualified entities, and conducts additional outreach to qualified:

- Small businesses,
- Minority-owned small businesses,
- Women-owned small business enterprises, and
- Disadvantaged business enterprises.

The FSA CPP takes necessary affirmative steps to ensure that small businesses, minority businesses, women's business enterprises, veteran-owned businesses and labor surplus area firms are used, when possible, as recommended by 2 C.F.R. § 200.321. The FSA CPP will:

- Evaluate whether above-listed types of businesses are potential sources,
- Place those qualified businesses enterprises on solicitation lists, and
- Search the Small Business Administration, Minority Business Development Agency, and Labor Surplus Area reports for additional potential sources.

Bidders self-certify in the qualification packet whether they meet the state and federal definitions of a small business, minority-owned small business, women-owned small business enterprise, and disadvantaged business enterprise.

1.17 ANTI-DISCRIMINATION, E-VERIFY, AND ANTI-HUMAN TRAFFICKING REQUIREMENTS

The Bidder certifies that they are in compliance as applicable by Federal or State law.
The Vendor shall comply with and perform all applicable provisions of Section 448.095, Florida Statutes. The Vendor shall register with and use the United States Department of Homeland Security's E-Verify system to verify the work authorization status of all newly hired employees. The FSA, the FSA CPP, or Purchaser, may terminate this Contract immediately for cause if there is a good faith belief that the Vendor has knowingly violated Section 448.09(1), Florida Statutes.

If the Vendor anticipates entering into agreements with a Subcontractor for the services and/or work contemplated under this Agreement, the Vendor will not enter into the Subcontractor agreement without first receiving an affidavit from the Subcontractor regarding compliance with Section 448.095, Florida Statutes, and stating that the Subcontractor does not employ, contract with, or subcontract with an unauthorized alien. The Vendor shall maintain a copy of such affidavit for the duration of the agreement and provide a copy to the FSA, the FSA CPP, or Purchaser, upon request.

In the event that the FSA, the FSA CPP, or Purchaser, has a good faith belief that a Subcontractor has knowingly violated Section 448.095, Florida Statutes, but the Vendor has otherwise complied with its obligations hereunder, the FSA, the FSA CPP, or Purchaser, shall promptly notify the Vendor. The Vendor agrees to immediately terminate the agreement with the Subcontractor upon notice from the FSA, the FSA CPP or Purchaser. Further, absent such notification from the FSA, the FSA CPP or Purchaser, the Vendor or any Subcontractor who has a good faith belief that a person or entity with which it is contracting has knowingly violated Section 448.09(1), Florida Statutes, shall promptly terminate its agreement with such person or entity.

By entering into this Contract, the Vendor represents that no public employer has terminated a contract with the Vendor under Section 448.095(5)(c), Florida Statutes, within the year immediately preceding the date of this Contract.

The Vendor certifies, by acceptance of this Contract, that neither it nor its principals utilize coercion for labor or services as defined in Section 787.06, Florida Statutes. The Vendor agrees to execute an affidavit in a form satisfactory to the FSA, the FSA CPP or the Purchaser in compliance with Section 787.06(14), Florida Statutes.

1.18 BEST COMMERCIAL PRACTICES

The apparent silence or omission of any description from the specifications shall be regarded as meaning that only the best commercial practices, size, and design are to be used. All workmanship is to be first quality. All interpretations of the FSA Base Specifications shall be upon the basis of this statement.

1.19 PUBLIC ENTITY CRIMES (“PEC”) AND SCRUTINIZED COMPANIES STATEMENTS

In accordance with the Public Entity Crimes Act, Section 287.133, Florida Statutes, a person or affiliate who has been placed on the convicted vendor list, maintained by the State of Florida Department of Management Services following a conviction for public entity crimes, may not submit a bid on a contract to provide any goods or services to a public entity, may not submit a bid on a contract with a public entity for the construction or repair of a public building or public work, may not submit bids on leases of real property to a public entity, may not be awarded or perform work as a vendor, supplier, sub-vendor, or consultant under a contract with a public entity, and may not transact business with any public entity in excess of the threshold amount provided in Section 287.017, Florida Statutes, for CATEGORY TWO for a period of 36 months from the date of being placed on the convicted vendor list.

In accordance with Section 287.135, Florida Statutes, Bidder certifies that neither it nor any of its officers, directors, executives, partners, shareholders, members, or agents is on the Scrutinized Companies with Activities in Sudan List, the Scrutinized Companies with Activities in the Iran Terrorism Sectors List, or the Scrutinized Companies that Boycott Israel List created pursuant to Sections 215.4725 and 215.473, Florida Statutes, and in the event such status changes, Bidder and/or Vendor, if status changes after award, shall immediately notify FSA, the FSA CPP and/or the Purchaser. If Bidder and/or Vendor, if applicable after award, is found to have submitted a false statement, has been placed on the Scrutinized Companies with Activities in Sudan List, the Scrutinized Companies with Activities in the Iran Terrorism Sectors List, or has been engaged in business operations in Cuba or Syria, or is now or in the future on the Scrutinized Companies that Boycott Israel List, or engaged in a boycott of Israel, the FSA and/or the FSA CPP may immediately terminate this Contract.

1.20 TAX EXEMPTION

Purchasers making a purchase pursuant to the awarded bid are generally exempt from Federal Excise and State Sales Tax. It is the responsibility of the Vendor to verify that the Purchaser is exempt by obtaining the Purchaser's Federal Excise and State Taxes and Use Certificate Number.

The Florida Sheriffs Association is a 501(c)3 organization and is exempt from all Federal Excise and State Taxes. The FSA State Sales Tax and Use Certificate Number is 85-8012646919C-3.

1.21 ORDER OF PRECEDENCE IN THE EVENT OF CONFLICT

In the event of conflict, the conflict may be resolved in the following order of priority (highest to lowest):

- Addenda to Contract Terms and Conditions, if issued
- Contract Conditions
- General Conditions
- Addenda to Bid Specifications, if issued
- The FSA Base Specifications
- Bidder Instructions

1.22 COMMUNICATIONS

Communications between a Bidder, lobbyist or consultant and the FSA are limited to matters of process or procedure and shall be made in writing to the FSA CPP Staff.

Bidders should not rely on representations, statements, or explanations other than those made in this Invitation to Bid or in any written addendum to this Invitation to Bid, and no oral representations, statements, or explanations shall be deemed to bind the FSA or Eligible Users.

1.23 CLARIFICATION AND ADDENDA

Any questions or clarifications concerning the Invitation to Bid shall be submitted to the FSA CPP by e-mail to CPP@flsheriffs.org with the bid title and number referenced on all correspondence. Final questions must be received by the date for Request for Clarification stated on the Bid Calendar. Questions and answers will be posted to the FSA CPP Bid System on the date indicated in the Bid Calendar. Questions received during the cone of silence dates listed on the Bid Calendar will not be addressed, except as provided herein.

Interpretation of the specifications or any solicitation documents will not be made to the Bidder verbally, and if any verbal clarifications are provided, they are without legal effect. The FSA CPP will make every attempt to e-mail updates to registered Bidders. However, posting to the FSA CPP website or the Bid System constitutes proper notice of addenda.

The FSA CPP shall issue a formal addendum if substantial changes that impact the submission of bids are required. Any such addenda shall be binding on the Bidder and shall become a part of the solicitation document. In the event of conflict with the original specifications, addenda shall govern to the extent specified. Subsequent formal addenda, if any, shall govern over prior formal addenda only to the extent specified. The FSA will not be responsible for any explanation or interpretation made verbally or in writing except those made through the posting of a formal addendum.

The bid submission constitutes acknowledgment of addenda to the FSA Base Specifications. Bids that fail to account for the specification addenda shall be determined to be nonresponsive; however, the FSA CPP may waive this requirement when in its best interest.

After the start of the Contract term, the FSA CPP will notify all Vendors of any addenda and will require acknowledgement of the new terms and conditions. If the Vendor does not agree to the new terms and conditions, the Vendor's award can be removed or replaced by another Vendor or qualified responsive Bidder.

1.24 SIGNED BID CONSIDERED AN OFFER

The signed bid shall be considered an offer on the part of the Bidder, which offer shall be deemed accepted upon approval by the FSA CPP. The bid submission must be signed by an authorized representative. Submission of a bid in the FSA CPP Bid System constitutes a signed bid for purposes of bid evaluation. An electronic signature may be used and shall have the same force and effect as a written signature.

1.25 ASSIGNMENT OF CONTRACT

No right or interest in this Contract may be assigned, transferred, conveyed, sublet, or otherwise disposed of, without prior written consent of the FSA CPP.

If the original Vendor sells or transfers all assets or the entire portion of the assets used to perform this

Contract, a successor-in-interest must perform all obligations under this Contract. The FSA CPP reserves the right to reject the acquiring entity as Vendor. A change of name agreement will not change the contractual obligations of the Vendor.

In the event a Manufacturer reassigns the product line to an alternate company, the Vendor is required to notify the FSA CPP in writing of the change within ten (10) business days of the reassignment. If the Vendor is not already an approved FSA CPP Vendor, the alternate company is required to submit a Qualifications Packet to the FSA CPP to become an approved Vendor prior to conducting any qualified sales. The FSA CPP may approve such assignments of existing or new vendors at its discretion. The Vendor is required to honor the Contract pricing and all of the applicable Terms and Conditions throughout the remaining term of the Contract.

1.26 TERMINATION OF PRODUCT LINE

If a Vendor terminates a product line (Manufacturer or model), the Vendor is required to notify the FSA CPP within ten (10) business days of the decision not to retain the product line. The FSA CPP may remove the terminated products from the Contract. In the event of the termination of a product line (Manufacturer or brand), the Purchaser shall compensate the Vendor in accordance with the Contract for all goods delivered by the Vendor prior to termination, net of any costs incurred by the Purchaser and the FSA as a consequence of the termination.

1.27 DEMONSTRATION OF COMPETENCY

Bidders must be able to demonstrate a good record of performance for a reasonable period of time, and have sufficient financial support, equipment and organization to ensure they can satisfactorily execute the services if awarded a Contract under the Terms and Conditions herein stated.

The terms "equipment" and "organization" as used herein shall be construed to mean a fully equipped and well-established company in line with the best business practices in the industry and as determined by the FSA CPP.

The FSA CPP may consider any evidence available and may require submission of supporting documentation regarding the financial, technical, and other qualifications and abilities of a Bidder, including past performance with the FSA CPP, in making the award.

The FSA CPP may inspect the Bidder's facility prior to the award of Contract. Bids will only be considered from firms which are regularly engaged in the business of providing the goods or services described in this Invitation to Bid.

1.28 VENDOR ABILITY TO PERFORM

The FSA CPP may require Bidders to show proof that they have been designated as authorized representatives of a Manufacturer or supplier, which is the actual source of supply. In these instances, the FSA CPP may also require information from the source of supply regarding the quality, packaging,

and characteristics of the products. Any conflicts between this material information provided by the source of supply and the information contained in the bid submission may render the bid nonresponsive.

During the Contract term, the FSA CPP may review the Vendor's record of performance and may require submission of supporting documentation to ensure that the Vendor is providing sufficient financial support, equipment and organization.

If the FSA CPP determines that the Vendor no longer possesses the financial support, equipment and organization in order to comply with this section, the FSA has the authority to immediately terminate the Contract.

By responding to this Invitation to Bid, the Bidder warrants that, to the best of his or her knowledge, there is no pending or threatened action, proceeding, or investigation, or any other legal or financial condition, that would in any way prohibit, restrain, or diminish the Bidder's ability to satisfy the obligations of a resulting contract. The Bidder warrants that neither it nor any affiliate is currently on the convicted vendor list maintained pursuant to Section 287.133, of the Florida Statutes, or on any similar list maintained by any other state or the Federal government.

The Bidder, by responding to this Invitation to Bid, acknowledges and warrants that, if selected, Bidder (being then considered a "Vendor") shall immediately notify the FSA, the FSA CPP and Purchaser in writing if its ability to perform is compromised in any manner during the term of the Contract.

1.29 FINANCIAL RESPONSIBILITY

Bidder affirms by the submission of the bid and by signature on the Contract Signature Form that the Bidder:

- Has fully read and understands the scope, nature, and quality of work to be performed or the services to be rendered under this Invitation to Bid and has adequate facilities and personnel to fulfill such requirements.
- Accepts the financial responsibility associated with this bid and declares that they have access to capital (in the form of liquidity or credit lines) in order to meet the financial demands of such award.
- Has assessed the financial responsibility required to serve the Contract as bid, including such details as the obligations to perform all items bid, zones bid, and quantities that could be ordered, as well as timing of payment from Purchasers, which can be forty-five (45) calendar days from receipt of invoice.

1.30 QUALITY AND SAFETY

All materials used for the manufacture or construction of any supplies, materials or equipment covered by this bid shall be new. The items bid must be new, the latest model, of the best quality, and highest-grade workmanship that meet or exceed Federal safety standards.

Items requiring certification should require certification of options in cases where non-certified options could result in the decertification of the original product or warranty. In all cases where options are not certified, the Bidder (or, if after award, the Vendor) must disclose to the End User that the non-certified options are not required to be certified. All options must meet or exceed Federal safety standards.

1.31 NONCONFORMANCE

Items may be tested for conformance with specifications. Items delivered that do not conform to specifications may be rejected and returned at the Vendor's expense.

Any violation of these stipulations may also result in:

- Vendor's name being removed from the Awarded Vendor List.
- The FSA and Purchasers being advised not to do business with Vendor.

1.32 GRATUITIES

Bidders shall not offer any gratuities, favors, or anything of monetary value to any official, employee, or agent of the FSA, for the purpose of influencing consideration of this bid. Bidders shall disclose in writing any conflicts of interest to the FSA prior to any award, or as soon as practicable after learning of any such conflict, including any contractual or employment relationships with the FSA or potential Purchasers of Bidders' products or services.

1.33 NEUTRALITY

The Cooperative Purchasing Program maintains a neutral role in the administration of its contracts and does not endorse, recommend, or promote individual vendors. All awarded vendors are responsible for their own marketing and outreach to participating agencies.

1.34 TIE BIDS

The FSA CPP has the right to award multiple Bidders the primary or alternate award in the event of a tie. In the event the FSA CPP desires to break tie bids, and businesses have qualifying drug-free work programs, the award will be made using the following criteria:

- Bidder within the State of Florida; and of none, then
- Vendors' performance record with Purchasers; and of none, then
- Coin Toss.

1.35 RIGHT TO AUDIT

Vendor shall establish and maintain a reasonable accounting system that enables the FSA CPP to readily identify Vendor's sales. The FSA CPP and its authorized representatives shall have the right to audit and to make copies of all related records pertaining to this Contract, including all government sales and Eligible User information, whether kept by or under the control of the Vendor, including, but not limited to those kept by its employees, agents, assignees, successors, sub-vendors, or Third Party Suppliers in whatever form they may be kept – written or electronic. Such records shall include, but not be limited to:

- Accounting records, including but not limited to Purchase Orders, confirmation of orders or invoices, paid vouchers, cancelled checks, deposit slips, ledgers, and bank statements;
- Written policies and procedures;
- Subcontract files (including proposals of successful and unsuccessful Bidders, bid recaps, etc.);
- Original estimates, quotes, or work sheets;
- Contract amendments and change order files;
- Insurance documents; or
- Memoranda or correspondence.

Vendor shall maintain such records during the term of this Contract and for a period of three (3) years after the completion of this Contract. At the Vendor's expense and upon written notice from the FSA and/or the FSA CPP, the Vendor shall provide such records for inspection and audit by the FSA and/or the FSA CPP or its authorized representatives. Such records shall be made available to the FSA and/or the FSA CPP during normal business hours within three (3) business days of receipt of the written notice. The FSA and/or the FSA CPP may select the Vendor's place of business or offsite location for the audit. The FSA and/or the FSA CPP may also request the Vendor provide requested records via e-mail.

Vendor shall ensure the FSA and the FSA CPP have these rights with Vendor's employees, agents, assigns, successors, and Third Party Suppliers, and the obligations of these rights shall be explicitly included in any subcontracts or agreements formed between the Vendor and any sub-vendors to the extent that those subcontracts or agreements relate to fulfillment of the Vendor's obligations to the FSA, the FSA CPP, or Purchaser(s).

Professional fees, personnel costs, and travel costs incurred by the FSA and/or the FSA CPP, under its authority to audit and not addressed elsewhere will be the responsibility of the FSA and/or the FSA CPP, as applicable. However, if the audit identifies underreporting, overpricing or overcharges (of any nature) by the Vendor to the FSA, the FSA CPP, or a Purchaser in excess of three percent (3%) of the total Contract billings, the Vendor shall reimburse the FSA and/or the FSA CPP for the total costs of the audit not to exceed $5,000. If the audit discovers substantive findings related to fraud, misrepresentation, or non-performance, the FSA may recoup all the costs of the audit work from the Vendor.

Any adjustments or payments that must be made as a result of any such audit or inspection of the Vendor's invoices or records shall be made within a reasonable amount of time, not to exceed sixty (60) calendar days, from presentation of the FSA's and/or the FSA CPP's findings to Vendor.
The FSA, the FSA CPP, and the Purchaser(s), as applicable have the right to assess damages or seek

reimbursements or refunds based on audit results.

1.36 LICENSES AND PERMITS

The Bidder shall obtain and pay for all licenses, permits and inspection fees for this bid submission and any resulting Contract. Where Vendors are required to enter or go onto the FSA or Purchaser property to deliver materials or perform
work or services as a result of a bid award, the Vendor will assume the full duty, obligation and expense of obtaining all necessary licenses, permits and insurance.

The Bidder must, by the time of award, be actively registered to do business in the State of Florida on Su nBiz.gov.

1.37 PERFORMANCE BONDS

Purchasers may request a performance bond from a Vendor. Performance bonds are recommended with pre-payment and will be at the expense of the requesting agency. Purchasers should determine the best practice in comparing performance bond expense against any prior discounts that may be available.

1.38 ELIMINATION FROM CONSIDERATION

This Invitation to Bid shall not be awarded to any person or Bidder who has outstanding debts to the FSA, whether in relation to current or previous bid awards or for other business purposes.

1.39 INDEPENDENT PREPARATION

A Bidder shall not, directly, or indirectly, collude, consult, communicate, or agree with any other Bidder as to any matter related to the bid each is submitting. Additionally, a Bidder shall not induce any other Bidder to modify, withdraw, submit, or not submit a bid.

Bidders or Vendors who are found to have engaged in these acts will be considered nonresponsive and will be suspended or barred from bid participation. Contract awards resulting from these acts may be terminated for default. Further, any such acts detected by the FSA may be reported to relevant law enforcement and/or prosecutorial agencies.

Bidders may submit multiple bids without violating this provision if the bid submitted is not from the same Manufacturer and product line. Dealers that share the same ownership may submit multiple bids without violating this provision if the Bidders are not in the same region featuring the same Manufacturer and product line.

1.40 DEFAULT

In case of default on the part of Vendor, the FSA and/or the FSA CPP may take necessary steps to otherwise procure the products sought, including but not limited to procuring the products or services from the next highest ranked Bidder or from other sources. A defaulting Vendor may be held liable for costs incurred by the FSA and/or the FSA CPP in procuring replacement products.

1.41 PROTESTS AND ARBITRATION

Any person who is adversely affected by the decision or intended decision to award shall file a "Notice of Protest" in writing to the FSA CPP within three (3) business days after the posting of the Intent to Award and shall file a formal written protest within five (5) business days after filing the Notice of Protest. Failure to file both a notice of protest and a formal written protest within the above referenced timelines shall constitute a waiver of proceedings.

The burden is on the party protesting the award of the bid to establish grounds for invalidating the award(s). The formal written protest must state with particularity the facts and law upon which the protest is based. Options are for informational purposes only and will not serve as a basis for protest. Failure to do so will result in a denial of protest. Formal written protest which states with particularity the facts and law upon which the protest is based will be reviewed by the FSA legal counsel for legal soundness and validity, and corrective action will be taken as needed contingent upon the validity of such claims. However, any additional time required and cost incurred by the FSA to substantiate a protesting party's claim(s) beyond the normal scope of its legal review due to the vague or inconclusive nature of the protesting party's filing will be reimbursable to the FSA and deducted from the protesting party's bond or security which must accompany their filing.

Any Bidder who files an action protesting a decision or intended decision pertaining to this Contract shall post a bond, cashier's check or money order payable to the Florida Sheriffs Association in the amount equal to ten percent (10%) of the item being protested. The bond, cashier's check or money order must be filed at the time of filing the formal written protest or within the five (5) business day period allowed for filing the formal written protest. The FSA CPP will provide the amount required within two (2) business days of the notice of protest received. This bond or security will be conditioned upon the payment of all costs which may be adjudged against the protesting party in a court of law and/or to reimburse the FSA for additional legal expenses incurred and required to substantiate the protesting party's claim(s). Failure to post the bond or security requirement within the time allowed for filing will result in a denial of protest. The filing of the protest shall not stay the implementation of the bid award by the Florida Sheriffs Association.

Should the unsuccessful Bidder(s) decide to appeal the decision of the FSA, they shall file a notice to the FSA CPP within three (3) business days of the FSA bid protest decision regarding their intent to request arbitration. A demand for arbitration with the American Arbitration Association's ("AAA") commercial panel under its rules and regulations must be made within ten (10) business days of the FSA bid protest decision. Any person who files for an arbitration with the AAA shall post with the Florida Sheriffs Association at the time of filing the formal written arbitration request, a bond, cashier's check, or money order payable to the Florida Sheriffs Association in the amount equal to ten percent (10%) of the product line being protested. This amount will be the same amount as the FSA CPP provided at the time

of filing the initial protest. Failure to provide written notice to the FSA CPP, file a demand for arbitration with the AAA, or failure to post the required bond and security requirement within the specified timelines shall constitute a waiver of arbitration proceedings. By responding to this procurement, the Bidder expressly agrees to the use of mandatory binding arbitration to resolve any appeals of the decision of the FSA, and any claims arising from or in any way relating to the procurement process, and expressly waives any and all rights that it may otherwise have to pursue such claims in any other forum, judicial or otherwise.

If the party filing for arbitration does not prevail, it shall pay all costs, legal expenses and attorney fees of the prevailing party incurred in connection with the arbitration. However, if the filing party prevails, the parties shall share equally the fees and expenses of the arbitration and AAA, and each shall bear the cost of their own attorneys' fees. The filing for arbitration shall not stay the implementation of the bid award by the Florida Sheriffs Association.

1.42 NONPERFORMANCE

By virtue of the bid submission, Bidder acknowledges its obligation to sell items in all zones for which it is awarded. Upon award, failure of the Vendor to comply with these requirements may result in the imposition of liquidated damages of up to $1,000 per item, which amount the Vendor agrees is reasonable, or probation, suspension, termination or a combination thereof from current and future bids at the FSA CPP's discretion.

The Vendor shall at all times during the Contract term remain responsive and responsible. In determining Vendor's responsibility, the FSA CPP shall consider all information or evidence that demonstrates the Vendor's ability or willingness to fully satisfy the requirements of the Terms and Conditions.

Vendors that are not in compliance with any of the provisions of this Contract can be assessed liquidated damages, suspended or terminated from the Contract. The FSA CPP at its sole discretion may remove a noncompliant Vendor from future competitive bid solicitations; or take other actions including suspension from the Contract until compliance issues are resolved, limit current or future Vendor participation by items or zones, or other actions as determined by the FSA CPP at its sole discretion.

At the FSA CPP's discretion, Vendors may be required to develop corrective action plans to address contract compliance. Failure to abide by corrective action plans will result in termination from the existing Contract and future competitive bid solicitations at the discretion of the FSA CPP.

In situations where there is evidence that the Vendor has engaged in egregious breaches of the Contract with respect to either the FSA CPP and/or the Purchaser, the Contract can be terminated immediately and the Vendor will be removed from future solicitations for a period of up to three (3) years, or a permanent ban from the bid process at the sole discretion of the FSA CPP.

Specific conditions for termination include, but are not limited to; failure to perform, refusal to accept orders during the Contract term while Manufacturer orders are still being accepted for current model year or the new year if the item is price protected by the factory, charging amounts exceeding MSRP on factory or Vendor installed items and packages, requiring the purchase of additional options over and

above the base item as a condition of acceptance of order, providing aftermarket options where factory options are available without the consent of the Purchaser, any misrepresentation of optional equipment or service as being factory that fails to meet the definition as described in this document, and any other practice deemed to be inconsistent with the intent of the Contract.

Any Vendor presented with a valid Purchase Order consistent with Vendor bid quotes or other agreed upon terms and pricing is required by this Contract to accept such Purchase Order and deliver the product. Purchase Orders must be fulfilled whether or not the Purchase Order includes options. The Vendor must deliver this product in accordance with the Terms and Conditions – regardless of whether doing so will provide the Vendor with a profit or loss.

Failure to deliver the item may result in the Purchaser seeking damages for the difference of cost to issue a new Purchase Order with another Vendor, plus any legal fees and damages that may be incurred in the process to facilitate a completed order. Additionally, the FSA and/or the FSA CPP may seek damages for nonpayment of administrative fees, to which the FSA and/or the FSA CPP is entitled, according to Section 3.21, and any attorneys' fees incurred in the recovery of these damages.

1.43 SEVERABILITY

In the event any provision of this Contract is held to be unenforceable for any reason, the unenforceability thereof shall not affect the remainder of the Contract, which shall remain in full force and effect and enforceable in accordance with its terms.

1.44 TERMINATION FOR CAUSE

If, through any cause within the reasonable control of the Vendor, it shall fail to fulfill in a timely manner or otherwise violate any of the terms of this Contract, the FSA shall have the right to terminate the services remaining to be performed. Written notice of the deficiencies shall be given to the Vendor and unless the deficiencies are corrected within ten (10) business days, the Contract may be terminated for cause immediately. The right to exercise the option to terminate for cause shall be in the sole discretion of the FSA, and the failure to exercise such right shall not be deemed to constitute a waiver of this right.

In the event of a termination for cause, the Purchaser shall compensate the successful Vendor in accordance with the Contract for all services performed by the successful Bidder prior to termination, net of any costs incurred by the Purchaser and the FSA as a consequence of the default.

Notwithstanding the above, the Vendor shall not be relieved of liability to the FSA for damages sustained by the FSA by virtue of any breach of the Contract by the Vendor, and the FSA may reasonably withhold payments to the Vendor for the purposes of offset until such time as the exact amount of damages due the FSA from the Vendor is determined.

1.45 TERMINATION WITHOUT CAUSE

The FSA and/or the FSA CPP can terminate this Contract in whole or part without cause by giving written notice to the Vendor of such termination, which shall become effective thirty (30) calendar days following receipt by Vendor of such notice.

In the event of a termination without cause, all finished or unfinished documents and other materials shall be properly delivered to the FSA.

The Vendor shall not furnish any product after it receives the notice of termination, except as necessary to complete the continued portion of the Contract, if any. The Vendor shall not be entitled to recover any lost profits that the Vendor expected to earn on the balance of the Contract or cancellation charges.

Any payments to the Vendor shall be only to the total extent of the Purchaser's liability for goods or services delivered prior to the date of notice to terminate the Contract.

1.46 CONTRACT ADVERTISEMENT AND USE OF THE FSA CPP LOGO

The FSA CPP logo is an official logo of the Florida Sheriffs Association designed to promote the program. The FSA CPP logo may be used by Vendors in accordance with the policy contained in this Section 1.46. Use of the FSA CPP logo is limited to the original version received from the FSA. Modifications are not permitted.

Methods of use include, but are not limited to:

- Electronic mediums such as websites, digital marketing campaigns, social media and e-mail; or
- Print media such as forms, marketing campaigns, business cards, posters, banners, brochures, flyers and postcards.

Vendors may request use of the FSA CPP logo by contacting cpp@flsheriffs.org and should include a brief description of how the Vendor intends to use it. The official FSA sheriff's star and wreath logo may not be used without prior written permission.

2.0 BIDDER INSTRUCTIONS

2.01 QUALIFICATION

Bidders are required to complete the qualification packet as part of the bid submission. A Bidder becomes a qualified Bidder if they comply with this section and Section 2.09, Mandatory Pre-Bid Meeting.

Qualification Packet information required for bid submission includes:

- Qualifications Form
    - Contact Information
    - Business Profile
    - References
    - Disqualifications & Defaults
    - Bidder's Authorized Dealer Listing
- Florida Statute Compliance Attestations
    - SunBiz
    - E-Verify
    - Anti-Human Trafficking
    - Workers' Compensation
    - Drug-Free Workplace
    - Compliance with Applicable Federal, State, and Local Laws and Ordinances
- Federal Compliance
    - Federal Compliance Certifications
    - Debarment and Suspension
    - Lobbying Certification for Contracts, Grants, Loans and Cooperative Agreements

The Qualification Packet is located on the Bid System.

2.02 LICENSING AND FACILITIES

Bidders are required to obtain all required licenses, including any applicable motor vehicle dealer licenses, and registrations, and comply with all applicable Federal, State, and local laws and ordinances, including any applicable motor vehicle dealer laws, in order to bid on any motor vehicle.

Bidders must maintain a repair facility within the State of Florida to provide warranty service for the items bid. If Bidders do not have a facility, the Bidder must be able to assist Purchasers in obtaining warranty work as authorized by the Manufacturer.

2.03 INSURANCE AND INDEMNIFICATION

Vendor shall maintain, at its sole cost and expense, the insurance coverages required by the FSA and Purchasers through the duration of this Contract, with limits of liability not less than the following:

- Workers' Compensation Insurance in accordance with the laws of the State of Florida.
- Comprehensive General Liability Insurance covering the Vendor's legal liability for bodily injury and property damage, contractual liability and completed products and operation, with limits of not less than $1,000,000 per occurrence and $2,000,000 aggregate, and covering at least the following hazards:
    - Independent Contractors Coverage for bodily injury and property damage in connection with any subcontractors' operation.
- Automobile Liability Insurance covering the Vendor's legal liability for bodily injury and property damage in limits of not less than $1,000,000 per occurrence, providing coverage for any accident arising out of or resulting from the operation, maintenance, or use by the Vendor of any owned, non-owned, or hired automobiles, trailers, or other equipment required to be licensed.

It is understood and agreed that all insurance policies provided by the Vendor are primary coverage and non-contributory with respect to any insurance or self-insurance the FSA or Purchasers possess that may apply to a loss resulting from the work performed pursuant to this Contract. All insurance policies issued to cover the insurance requirements herein shall provide full coverage from the first dollar of exposure.

Vendor shall be fully liable for the actions of its agents, officers, employees, contractors, partners, subcontractors, and Third Party Suppliers, performing work under this Contract, and shall fully indemnify and hold harmless the Florida Sheriffs Association ("FSA"), the Purchasers, and each of their officers, agents, and employees from suits, actions, damages, and costs of every name and description, including legal counsels' fees and court costs, arising from or relating to negligence, omissions, personal injury or damage to real or personal tangible property alleged to be caused in whole or in part by Vendor, its agents, officers, employees, contractors, partners, subcontractors, and Third Party Suppliers; provided, however, that the Vendor shall not indemnify for that portion of any loss or damages resulting directly from the grossly negligent acts or omissions of the FSA or Purchasers or for that portion of any loss or damages proximately caused by intentional wrongful acts or omissions of the FSA or Purchasers.

All insurance policies shall be issued by companies authorized to do business under the laws of the State of Florida and these companies must have a rating of B+ or better per the AM Best Rating. At no time shall the Vendor be without insurance in the required amounts. No policy may be changed to provide for less coverage than is required or canceled during the term of this Contract without at least thirty (30) days' written notice to the FSA and/or Purchasers, as applicable.

The Vendor must specifically and distinctly assume, and does so assume, all risks of damage or injury to property or persons used or employed on or in connection with the work to be performed by Vendor pursuant to this Contract and of all damage or injury to any person or property wherever located, resulting from any action, omission or operation by the Vendor, its agents, officers, employees, contractors, partners, subcontractors, and Third Party Suppliers, under this Contract or in connection with the work contemplated herein. It is understood and agreed that at all times the Vendor, its agents,

officers, employees, contractors, partners, subcontractors, and Third Party Suppliers, are acting as independent contractors to the FSA and/or Purchasers, as applicable. Nothing in this Contract shall be interpreted or construed as creating or establishing the relationship of employer and employee between the FSA and/or Purchasers and the Vendor or any of its agents, officers, employees, contractors, partners, subcontractors, and Third Party Suppliers, or anyone directly or indirectly employed by the Vendor. The parties acknowledge that the Vendor is not an employee for State or Federal tax purposes. The Vendor shall hire and pay all of Vendor's employees, agents, subcontractors or anyone directly or indirectly employed by the Vendor, all of whom at all times being entirely under the Vendor's supervision, direction and control. The Vendor shall be responsible for the means, manner, and methods by which its duties, obligations, and responsibilities under this Contract are met to the satisfaction of the FSA and/or Purchasers, as applicable. The Vendor shall be responsible for every part of the work contemplated herein, and for all labor, expertise, materials, tools, appliances, and property of every description, used in connection with this Contract.

The Vendor will secure and maintain policies of Third Party Suppliers performing work or providing services and/or materials to or for Vendor in furtherance of Vendor's performance under this Contract. All Third Party Supplier insurance policies must be made available to the FSA and/or Purchasers upon written request. Compliance by the Vendor and all Third Party Suppliers with the foregoing requirements as to carrying insurance and furnishing copies of the insurance policies will not relieve the Vendor or any of its Third Party Suppliers of each of their liabilities and Purchasers for the acts and omissions of the Third Party Suppliers and of persons employed by the Third Party Suppliers as Vendor is for acts and omissions of persons directly employed by the Vendor.

The FSA and/or Purchasers may request, and upon such request the Vendor must furnish, proof of insurance, within seven (7) calendar days of receipt of the written request once the Contract times have commenced. Should the Vendor fail to provide acceptable evidence of current insurance during the Contract term, the FSA and/or Purchasers, as applicable, have the right, but not obligation, to consider the Contract breached and terminate the Contract effective immediately, in the sole discretion of the FSA and/or Purchasers, as applicable. If Vendor fails to have secured and maintained the required insurance, the FSA and/or Purchasers have the right to consider alternate insurance coverage proffered by the Vendor but has no obligation to do so.

The FSA and/or Purchasers will give the Vendor the opportunity to take over and settle or defend any such action at Vendor's sole expense. As permitted by law and within a reasonable time period, the FSA and/or Purchasers will give the Vendor written notice of an action or threatened action. Vendor will not be liable for commercially unreasonable costs, expenses or compromises incurred solely by the FSA, or Purchasers, in any legal action without Vendor's prior written consent, which consent shall not be unreasonably withheld, conditioned, or delayed.

The Comprehensive General liability insurance coverage and Automobile liability insurance coverage must extend to and include the following contractual indemnity and hold harmless agreement:

The Vendor hereby agrees to indemnify and hold harmless the FSA, a 501(c)3, its officers, agents, and employees from all claims for bodily injuries and for all damages to property, including tangible and intangible, per the insurance requirement under the specifications including costs of investigation, all expenses of litigation, including reasonable legal counsel fees (including paralegal and other expert and support service fees) and the cost of appeals arising out of any such claims or suits because of any and all acts, omissions or commissions by the Vendor, its agents, officers, employees, contractors, partners,

subcontractors, and Third Party Suppliers under the Contract FSA26-EQU24.0 Equipment.

The foregoing indemnity agreement must apply to any and all claims and suits other than claims and suits arising out of the sole and exclusive gross negligence of the FSA, its officers, agents, and employees, as determined by a court of competent jurisdiction.

The Vendor will notify the insurance agent without delay of the existence of the Hold Harmless Agreement contained within this Contract and furnish a copy of the Hold Harmless Agreement to the insurance agent and carrier.

The Vendor, at all times during the full duration of work under this Contract, including any extra or additional work approved by and consented to in writing by the parties in connection with this Contract, shall meet the requirements of the foregoing provisions.

2.04 SPECIFICATIONS

All items covered by this Invitation to Bid and the resulting Contract, and the specifications shall be the Manufacturer's current basic production model, and shall, as a minimum, be equipped with all standard factory equipment in accordance with the manufacturer's latest literature unless otherwise noted in the Bid System or FSA Base Specifications.

The FSA Base Specifications are contained in the FSA CPP Bid System, may be requested from the FSA CPP, and are retained within the FSA CPP's archive. As part of the bid submission, Bidders will be required to provide confirmation that the item bid meets the FSA Base Specification. The FSA CPP may reject bids that fail to provide confirmation that the item(s) bid meet the FSA Base Specifications.

The FSA CPP develops the specifications with subject matter experts and publicly available information. However, the FSA CPP does not have access to full details from the Manufacturer and relies on Bidders to assist in this process. Bidders should immediately notify the FSA CPP of any inaccuracies in the specifications. All notifications of inaccuracies must be in writing.

If awarded a Contract, Vendor(s) must offer and supply an item that either meets or exceeds all the requirements included in the applicable FSA Base Specifications, unless a Purchaser specifically issues a Purchase Order for a base item and option that differs from the FSA Base Specifications. Failure of a Vendor to comply with these provisions will result in Vendors being held responsible for all costs required to bring the item into compliance with the Contract specifications.

2.05 SEALED BIDS

For purposes of this solicitation, a sealed bid is considered a bid submitted using the FSA CPP Bid System.

2.06 MISTAKES

Bidders are expected to examine the FSA Base Specifications, delivery schedules, bid prices and all information pertaining to servicing this Contract before submitting a bid. Failure to do so will be at the Bidder's risk.

2.07 EXCEPTIONS

Any requested exceptions, deviations, or contingencies a Bidder may have to the Terms and Conditions must be documented in Bidder's submission. Exceptions to the FSA Base Specifications at the time of the bid submission shall reference the item number, make and model. The FSA CPP has the discretion to grant or deny, in whole or in part, the Bidder's requested exception, deviation or contingency to the specifications or Terms and Conditions. Bidder acknowledges that the bid may be disqualified if the FSA CPP rejects the proposed exceptions.

2.08 EQUIVALENTS

Prior to the opening of the Bid System, Bidders may request item equivalents. The Bidder must submit the Manufacturer name and model number (or product identifier) of each equivalent requested to the FSA CPP. Complete, descriptive, technical literature should demonstrate that the equivalent conforms with the FSA Base Specifications. If a bid uses equivalents without prior approval, the bid may be disqualified.

2.09 MANDATORY PRE-BID MEETING

Bidders are required to attend or participate in the mandatory Pre-Bid Meeting. The Pre-Bid Meeting is designed for Bidders, the Fleet Advisory Committee, and the FSA CPP to clarify questions on the Terms and Conditions and to confirm all FSA Base Specifications. Questions relating to the items, specifications, the bid process, or award can be asked at the Pre-Bid Meeting. Bidders have the opportunity to suggest technical modifications or corrections before the FSA Base Specifications are finalized.

The FSA CPP reserves the right to grant attendance exceptions to the mandatory Pre-Bid Meeting if the Bidder has requested authorization, agrees in writing to meet all the Terms and Conditions without exception and further waives their right to protest the bid process in its entirety or any portion thereof.

2.10 PRICES QUOTED

Items and options should reflect the most complete price and be below MSRP and at a minimum should cover the cost of the item or option bid.

Prices quoted in the bid submission should reflect the final amount the Bidder can expect to receive for payment for the items bid for the duration of the Contract, unless otherwise provided in the Contract.

Prices submitted as indicated in the sealed bid are final. Bidders acknowledge that prices quoted will be valid for a period of sixty (60) calendar days from the date of bid opening.

Each item, make, and model must be priced and bid separately. Prices must be inclusive of all the components included in the FSA Base Specification.

Prices bid must include the administrative fee the FSA CPP charges to administer the Contract, as outlined in these Terms and Conditions. The administrative fee is three quarters of one percent (.75%).

Prices bid must be at least cost, be Free on Board ("FOB") destination, and must include delivery to the Purchaser.

Upon award, the Vendor has the authority to offer additional discounts based on prompt payment, quantity, as well as additional Manufacturer or Vendor discounts.

2.11 OPTION PRICING

Option pricing must include the administrative fee. Bidders must provide a price for each option in addition to a percent below MSRP for factory-installed options or a percent above cost for other options.

The FSA CPP has the discretion to disqualify Bidders if the option pricing is excessive. In order to determine if pricing is excessive, Bidders and, if awarded a contract, Vendors agree to provide documentation to the FSA CPP to verify cost at any time during the solicitation process or during the Contract term. This information is for comparison purposes and will not be published.

Options are intended to add or delete equipment or features from the FSA Base Specifications. Options can provide an upgrade or downgrade to a Manufacturer's model and should not be made available for purchase separate from the base item. Options may only provide a downgrade to a Manufacturer's model when specifically requested in a Purchase Order issued in accordance with the Terms and Conditions by a Purchaser. Bidders shall NOT use options to create an item that is available as another item bid on this Invitation to Bid.

Example: A Vendor who is awarded the bid for a 150 kW Generator cannot offer an Automatic Transfer Switch as an option in order to circumvent the bid award for the Automatic Transfer Switches.

The use of options to facilitate the sale of an alternate Manufacturer's product which is outside the scope of the FSA Base Specifications will be determined non-responsive and the bid will be rejected in whole or part by the FSA CPP. Bidders must disclose which options require the purchase of other options or are dependent on another option in their bid submission.

Bidder must use proper Manufacturer codes for factory options. Options available through the factory should be bid as and supplied to Purchaser as factory options, unless otherwise requested in writing by the Purchaser. Factory package options are permitted under this Contract. Factory package options included in the bid submission must detail what components the package includes.

If the Bidder wishes to offer credit to the Purchaser for an option that is standard on the FSA Base Specifications, the Bidder should include the word “Credit” at the beginning of the description field and continue to describe the option being credited.
Loose Equipment can be bid as an option and made available to Purchasers for items originally purchased from this Contract. For purposes of this provision, “Loose Equipment” is any item of equipment that attaches to the heavy equipment item(s) included in the awarded bid, such as different sized blades. Loose Equipment does not include accessories, such as additional keys.

2.12 BID SUBMISSION

Bidders must submit a bid electronically using the Bid System. Bid submissions include a price for each item and option bid in accordance with Section 2.10, 2.11, 2.13. Each Bidder must submit a qualifications package for each bid. The bid must be received by the date and time specified on the Bid Calendar in Appendix B. Failure to meet all submission requirements by the date indicated on the Bid Calendar will result in rejection of the bid.

Bid System: VendorLink
The Bid System is located at https://www.myvendorlink.com. Bidders are encouraged to participate in training provided. Usernames and passwords will be issued to Bidders after registering in the Bid System. Contact VendorLink at support@evendorlink.com if technical issues arise during bid submission. Prices are to be rounded to the nearest whole dollar. If a Bidder submits bid pricing using cents, the following formula will be applied to round the bid pricing to the nearest whole dollar: $.01-.49 will be rounded down to the dollar bid (e.g., $50.49 = $50) and $.50-.99 will be rounded to the next dollar (e.g., $50.50 =$51).

Bid Submission
To ensure correct bid submittal and formatting, Bidders shall provide:

- Price for each item by zone.
- Upload files as instructed in the Bid System; files requested will be in .pdf format.
- Follow all instructions outlined in this Invitation to Bid and provide all requested information.

The bid shall include the following documents:

- Executed Qualifications Packet.
- Build sheet for each item bid as a single .pdf.
- Any requested exceptions or equivalents.

Option Upload

An option sheet should be submitted for each item bid. The Bid System will accept option information for each item through a .pdf file upload. Each option sheet should include a header to identify the FSA CPP Contract title and number, the Bidder name, item number, make and model. Each option sheet should include:

- Option
- Description
- Manufacturer order code or identifying code
- Price
- Percent discount from MSRP or list price

The FSA CPP may ask awarded Vendors to supply one (1) hard copy set with digital signatures and original compliance forms, prior to the Contract execution. Hard copy bids should not be submitted unless specifically requested by the FSA CPP. The FSA is not responsible for Bidder's improper use of the Bid System. Exceptions may be granted to Bidders by the FSA CPP pursuant this section should any Bid System malfunctions occur.

2.13 ZONE BIDDING

Bidders may bid in one or more geographic zones. Bidders must submit pricing for each zone they wish to be evaluated. The zone map is included in Appendix A. The geographic zones are in place to assist Bidders in estimating costs of delivery, which must be included in the price bid and quoted to the Purchaser.

2.14 EXECUTION OF BID

By submitting a response to this Invitation to Bid, the Bidder agrees to the Terms and Conditions and to be bound by such Terms and Conditions if selected for award. The Bidder must submit the Contract Signature Form with the signature of an authorized representative five (5) days prior to award. All Terms and Conditions are applicable throughout the term of the awarded Contract and are not specific to any given year, make or model.

2.15 MODIFICATION OR WITHDRAWALS OF BIDS

A Bidder may submit a modified bid to replace all or any portion of a previously submitted bid until the due date and time of the bid submission listed in the Bid Calendar. Modifications received after the bid due date and time will not be considered.

Bids can be withdrawn in writing prior to the Contract award. If a Bidder must withdraw the bid, the Bidder must contact the FSA CPP immediately. Bid withdrawals are handled on a case-by-case basis and can result in a limitation of participation in future bids.

2.16 LATE BIDS

The responsibility for submitting a bid before the due date and time on the Bid Calendar is solely and strictly the responsibility of the Bidder. The FSA is not responsible for delays caused by technical problems, any internet outages or delays incurred by electronic delivery, or any other occurrence. Any reference to time will be based on Eastern Time.

2.17 BID OPENING

Bids shall be opened on the date and time specified on the Bid Calendar. The bid opening may occur at the Florida Sheriffs Association, 2617 Mahan Drive, Tallahassee, Florida, or may be offered online.

The FSA CPP will provide a bid inspection period for Bidders following the bid opening. The date, time and duration will be announced prior to the bid opening.

2.18 DETERMINATION OF RESPONSIVENESS

Determination of responsiveness will take place at the time of bid opening and evaluation. In order to b e deemed a responsive Bidder, the bid must conform in all material respects to the requirements stated in the Invitation to Bid. As set forth in Section 2.22, the FSA CPP reserves the right to waive or allow a Bidder to correct minor irregularities.

2.19 RESPONSIBLE BIDDER CRITERIA

Bids will be evaluated to determine if qualifications and Contract requirements are met. Responses that do not meet all requirements of this Invitation to Bid or fail to provide all required information, documents or materials may be rejected as nonresponsive. The FSA CPP will not request documentation or consider a Bidder's social, political, or ideological interests in determining if the Bidder is a responsible Bidder. The FSA CPP will not give preference to a Bidder based on the Bidder's social, political, or ideological interests.

Bidders whose responses, past performance, or current status do not reflect the capability, integrity, or reliability to fully and in good faith perform the requirements of the Contract may be rejected as non-responsible. In determining a responsible Bidder, the following factors may be considered:

- Adequacy of facilities, staffing, and financial resources;
- Previous experience with the FSA Contract or other similar government contracts;
- Ability to provide excellent customer service, including on previous FSA contracts; and
- Any other information relevant to the responsibility of a Bidder of which the FSA CPP is aware.

In addition to the requirements set forth by these Terms and Conditions, the FSA CPP reserves the right

to request staffing, performance, and financial information from any Bidder during the evaluation process.

The FSA CPP reserves the right to determine which responses meet the requirements, specifications, Terms and Conditions of the solicitation, and which Bidders are responsive and responsible.

The FSA CPP further reserves the right to limit participation of Bidders who, in the FSA CPP's sole discretion, are determined to present responsibility concerns that call into question the Bidder's ability to perform but do not rise to the level of requiring rejection of the Bidder as non-responsible.

2.20 BASIS FOR AWARD

The FSA CPP shall make awards to the qualified, responsive, and responsible Bidder(s) who submitted the lowest price by item, Manufacturer, and zone. Awards may also be made to subsequent lowest responsive and responsible Bidders by item, Manufacturer, and zone, when determined to be in the best interest of the FSA and the Purchaser(s). The FSA CPP has the discretion to consider option pricing in making the award and to disqualify Bidders for proposing excessive option pricing.

Awards will not be given to any parties listed on the government wide exclusion in the System for Award Management.

The FSA CPP reserves the right to accept or reject any and all bids, and to waive any minor irregularity, technicality, or omission if it determines that doing so will serve the Purchaser's best interest. The FSA CPP reserves the right to make multiple awards for each item, if determined to be in the best interest of the FSA and the Purchasers.

Awards will be posted on the FSA CPP website according to the date posted in the Bid Calendar.

2.21 BID TABULATIONS

The Bid Tabulation report will be posted in the FSA CPP Bid System after the bid submission closes.
If there is a delay in posting the bid tabulation results, the FSA CPP will post a notice of the delay and a revised date for posting of results.

2.22 MINOR IRREGULARITIES/RIGHT TO REJECT

The FSA CPP has the right to accept or reject any and all bids, or separate portions thereof, and to waive any minor irregularity, technicality or omission if the FSA CPP determines that doing so will serve its best interest or the best interest of the Purchasers. A minor irregularity is a variation from the Terms and Conditions of this procurement that does not affect the price of the bid or give the Bidder a substantial advantage over other Bidders and thereby restrict or stifle competition and does not adversely impact the interests of the FSA or the Purchasers. At its option, the FSA CPP may allow a Bidder to correct minor irregularities but is under no obligation to do so. In doing so, the FSA CPP may request a Bidder to provide clarifying information or additional materials to correct the irregularity. However, the FSA CPP

will not request, and a Bidder may not provide the FSA CPP with additional materials that affect the price of the bid or give the Bidder an advantage or benefit not enjoyed by other Bidders.

The FSA CPP may also reject any bids not submitted in the manner specified in the Invitation to Bid.

2.23 CONE OF SILENCE

This Invitation to Bid is subject to the Cone of Silence that begins the date the bid submission opens through the intent to award date as indicated in the Bid Calendar. During this period, all communications regarding this solicitation between the FSA and Bidder will cease, except for procedural questions, questions regarding problems incurred in the use of the Bid System, or communications initiated by the FSA CPP. All permitted communications during this period shall be made in writing to the contacts identified in Section 1.01 of this Invitation to Bid.

3.0 CONTRACT CONDITIONS

3.01 GENERAL REQUIREMENTS

Once the bid has been awarded, the Terms and Conditions of this document become the Contract between the FSA and the awarded Vendor. The Terms and Conditions apply to all items purchased from this Contract.

3.02 STATEMENT OF AUTHORITY

Each person signing the Contract warrants that they are duly authorized to do so and binds the respective party to the Contract.

3.03 VENDOR CONTACT INFORMATION

The Vendor shall maintain current contact information with the FSA CPP at all times for sales and submission of Purchase Orders, quarterly reports, and administrative fee payments. If a change occurs during the term of this Contract, the Vendor must notify the FSA CPP immediately, and in all cases, no later than two (2) business days after Vendor becomes aware of the change.

3.04 ADDITIONS OR DELETIONS

The FSA CPP reserves the right to add or delete any items from the Vendor's bid or this Contract when deemed to be in the best interest of the FSA and Purchasers, at its discretion. This decision to take action may be based upon and not limited to few or no sales, product recalls and other safety issues, Vendor or Manufacturer performance, or the product's lack of relevance.

For items that come to market during the Contract term, the FSA CPP may authorize qualified and awarded Vendors to offer the new item under the existing Contract Terms and Conditions, if the Manufacturer authorizes a Vendor to sell the item. The FSA CPP will request awarded Vendors submit pricing and will evaluate the responses prior to authorizing awarded Vendors to offer the new item.

3.05 CONTRACT EXTENSION

Contract Extension

The Contract may be extended by mutual agreement for up to two (2) additional years, on a year-to-year basis. The FSA reserves the right to execute a contract extension or to allow the Contract to fully or partially terminate and readvertise for bids, whichever is in the best interest of the FSA.

The Vendor may request price adjustments for contract extensions as provided for herein. If no request is received from the Vendor, the FSA will assume that the Vendor has agreed that the optional term may be exercised without a price adjustment. Any adjustment request received after the execution of an extension may not be considered unless otherwise provided for in this Contract.

Month-to-Month Continuation

In the event a new contract is not active at the time of this Contract's expiration, this Contract's Terms and Conditions shall extend on a month-to-month basis and shall not constitute an implied extension of the Contract. Such a month-to-month continuation shall be upon the compensation and payment provided herein.

3.06 PRICE ADJUSTMENT

The Terms and Conditions provide the following options for price adjustments:

- Annual Price Adjustments
- Changes to Manufacturer Production or Design
- Manufacturer Certified Adjustments
- Equitable Adjustments

Price adjustment requests must clearly substantiate the need to increase or decrease the price. Price adjustments will not be considered if Vendors are delinquent on administrative fee payments or have outstanding quarterly reports.

Annual Price Adjustment

The FSA CPP may consider annual price adjustments due to:

- Changes in the Producer Price Index ("PPI") as published by the U.S. Department of Labor, Bureau of Labor Statistics ("BLS"); or
- As a result of changes to national or state standards that require substantial price adjustments.

The FSA CPP may consider other documentation related to the change to national or state standards but is not obligated to grant price changes without literature from the Manufacturer. The FSA CPP will consider the request and will make a final determination on the change in price.

Changes to Manufacturer Production or Design

Significant changes by the manufacturer to the production of and specification design may initiate a price adjustment request. The FSA CPP will consider order dates, production factors, model year, or other conditions, as well as the replacement or complete redesign of items. Vendors must provide documentation from the Manufacturer.

Manufacturer Certified Adjustments

Vendors must provide documentation from the Manufacturer to the FSA CPP that shows the additional costs or price adjustments imposed by the Manufacturer and substantiate the need for a related price adjustment for this Contract.

Equitable Adjustments
The FSA CPP, on behalf of the FSA, may make an equitable adjustment to the Contract terms or pricing at its discretion.

3.07 CONDITIONS

It is understood and agreed that any item offered or shipped as a result of this Contract shall be the most current model offered.

3.08 PRODUCTION CUTOFF

Vendors shall notify the FSA CPP in writing no less than sixty (60) calendar days prior to the close of final order date by the Manufacturer when the final order date is during the term of the Contract. Purchase Orders received by the Vendor ten (10) business days prior to the final order date must be accepted and entered the order system with the Manufacturer. Purchase Orders issued and received after the production cutoff date will be subject to availability. In this case, the Vendor and Manufacturer have the discretion whether to choose to provide next year's model at current year's prices until the end of the Contract term. If the Manufacturer cutoff date is during the term of the Contract and will affect the Purchaser's ability to obtain the items, the FSA CPP may consider substitutions from the same Manufacturer.

3.09 FACILITIES

The FSA CPP reserves the right to inspect the Vendor's facilities at any time with prior notice.

3.10 FACTORY-INSTALLED OPTIONS

All options specified as factory-installed are to be installed on the item at the primary site of assembly and are the Manufacturer's standard assembly-line product. Aftermarket and vendor-installed equipment will not be accepted as factory-installed. Vendors found supplying aftermarket or vendor-installed equipment where factory-installed are specified shall be required to retrieve all delivered items and supply new items meeting the specifications.

All factory-ordered options are to be OEM and installed at the primary site of assembly unless otherwise noted by the Vendor and acknowledged in writing by the Purchaser. Verbal agreements will not be recognized.

3.11 VENDOR-INSTALLED OPTIONS

All Vendor-installed accessories, equipment, or options shall be installed according to the Manufacturer's specifications. All Vendor-installed options must be manufactured by an established Manufacturer of the product provided. Vendors are required to disclose make and model of product being offered, the design and model must be approved by the Purchaser prior to installation. Prior to any purchase, the Vendor must also disclose the warranty of any accessory, equipment or option that is less than or exceeds the factory or equipment warranty coverage. Any Vendor that violates this provision will be considered in default of the Contract. The FSA CPP may terminate the Contract in accordance with these Terms and Conditions.

3.12 NON-SCHEDULED OPTIONS

A non-scheduled option is an option not listed on the FSA CPP published award. Vendors may provide non-scheduled options at less than MSRP or the Published List Price. Non-scheduled options should be identified and listed as a separate line item with the price and discount on the Purchase Order. Non-scheduled options are covered under these Terms and Conditions.

3.13 FORCE MAJEURE

A Vendor shall not be penalized for a delay resulting from the Vendor's failure to comply with delivery requirements if neither the fault nor the negligence of the Vendor or its employees contributed to the delay and the delay is due directly to acts of God, wars, acts of public enemies, strikes, fires, floods, or other similar cause wholly beyond the Vendor's control, or for any of the foregoing affecting the Vendor's Third Party Suppliers if no alternate source of supply is available to the Vendor.

3.14 PARTS

Vendors may sell repair and replacement parts. Parts pricing must include the administrative fee. If a Vendor wishes to offer parts under this Contract, the Vendor must provide a price list to the FSA and

offer a discount below MSRP or Published List Price. Bidders and/or Vendors, as applicable, may include parts pricing sheet with the bid submission or following award. Parts are listed as a separate item group and will be listed by Vendor. Bidders and/or Vendors, as applicable, may use the template offered in the bid system. Items listed below are required for the pricing sheet:

- Category
- Description
- MSRP or List Price discount percentage
- Exceptions to discount provided
- Quantity discounts

3.15 PURCHASE ORDERS

To initiate a purchase, a Purchase Order must be issued to the Vendor, which includes:

- The FSA CPP contract title and number;
- The FSA CPP item number;
- The make and model or item description; and
- Purchaser name, phone number and email address.

The Vendor's acceptance of a Purchaser's order will indicate that the Vendor agrees to deliver an awarded item that will be fully compatible with all of its options. Production schedules and delivery dates should be discussed at the time the quote is provided to the Purchaser, or if no quote is provided, when the Purchase Order is delivered to the Vendor. Vendor shall place the order with the Manufacturer within ten (10) business days of receipt of the Purchase Order. The Vendor shall ensure that all orders are placed in full compliance with the specifications and the Terms and Conditions of the Contract and the Purchase Order. Any changes that are required to bring an item into compliance with the various options due to an incorrect order will be accomplished at the Vendor's expense.

The Vendor should supply a Confirmation of Order to the Purchaser and the FSA CPP fifteen (15) calendar days from receipt of Purchase Order without request by the Purchaser. Any additional information needed to complete this form should be obtained by the Vendor from the Purchaser.

While it is recommended that a Purchaser purchase from the zone which is closest to their location, it is not mandatory to do so. If the Purchaser determines that a Vendor in another zone can better serve the Purchaser's needs, the Purchaser may order from a Vendor in another zone. Vendors that provide awarded items outside of an awarded zone may upon mutual agreement between the Vendor and the Purchaser charge a delivery fee.

If a Vendor receives a Purchase Order for an item for which they were not awarded, the Vendor must notify the Purchaser and return the Purchase Order to the Purchaser within three (3) business days.

The Vendor must submit electronic copies of Purchase Orders within fifteen (15) calendar days of the Purchase Order issue date. Purchase Orders should be submitted through the reporting tool provided by the FSA CPP. Purchase Orders received by the Vendor after this deadline must be submitted to the FSA

CPP as soon as possible with the date received by the Vendor and cause of the delay. Purchase Orders should contain the following required information:

- Purchaser name,
- Purchase Order number,
- Purchase Order issue date,
- The FSA CPP contract title and number,
- Item number,
- Item make and model, or item description,
- Item price,
- Options by item, and
- Estimated delivery date.

Purchase Orders vary in format and information provided. If a Purchase Order does not include the required information, the Vendor must submit supplemental documentation to the FSA CPP at the same time the Purchase Order is due. Such information may be in bid quotes, equipment proposals, confirmation of orders, or other documents. If a Purchaser does not use Purchase Orders, written communication from the Purchaser to the Vendor will be provided to the FSA CPP.

3.16 DELIVERY

Vendors are to inspect the item to confirm whether the item meets or exceeds the FSA Base Specification, Manufacturer specification, and Purchase Order. Deliveries not complying with these requirements may be rejected and will have to be redelivered at Vendor's expense.

Delivery shall be within the normal working hours of the user, Monday through Friday, excluding holidays. Delivery schedules shall be agreed to by the Purchaser and the Vendor. Vendor shall notify the Purchaser no less than twenty-four (24) hours prior to delivery of the time and location, which shall reflect the mutually agreed upon delivery details. The Vendor shall be responsible for delivering items that are properly serviced, clean and in first class operating condition. Items shall be delivered with each of the following documents completed or included:

1. Copy of the Purchase Order.
2. Copy of the FSA Base Specification.
3. Copy of Manufacturer's invoice, price sheet, build sheet or other documentation that verifies what components are included on the item being delivered
4. Copy of the pre-delivery service report
5. Registration warranty certification
6. Owner's manual
7. Registration, tag and title or an application for the registration, as applicable

All items with fuel tanks of thirty-five (35) gallons or less must contain no less than one quarter (1/4) tank of fuel as indicated by the fuel gauge at the time of delivery. For items that have more than thirty-five (35) gallons, a minimum of one eighth (1/8) of a tank of fuel must be provided. All electric utility vehicles and battery powered items must be delivered with a minimum charge level of ten percent

(10%).

Items with hour meters must be delivered with fewer than five (5) hours on the hour meter or may be rejected by the Purchaser. The Purchaser may choose to negotiate a lower purchase price when the item exceeds five (5) hours.

When items require service or adjustments upon delivery, the Vendor shall either remedy the defect or be responsible for reimbursing the Manufacturer's local authorized representative or other service provider to remedy the defect. Such service or adjustments shall be initiated by the Vendor within forty-eight (48) hours after notification by a Purchaser, not to include weekends and holidays. Delivery will not be considered complete until all services or adjustments are satisfactory, and the item is redelivered or repaired. The cost of any transportation required to address the defect shall be the responsibility of the Vendor until the items are satisfactory and accepted by the Purchaser.

3.17 INSPECTION AND ACCEPTANCE

Final acceptance shall be given only after the Purchaser inspects or confirms the item meets Contract specifications. Delivery of an item to a Purchaser does not constitute acceptance for the purpose of payment. Inspection and acceptance will be at the Purchaser's destination unless otherwise previously agreed upon location was provided in the Purchase Order. Should the delivered items differ in any respect from the FSA Base Specifications, payment can be withheld until such time as the Vendor completes the necessary corrective action.

3.18 INVOICING AND PAYMENTS

Invoicing and payments shall be the responsibility of the Vendor and Purchaser placing orders using this Contract. Vendors must invoice each Purchaser independently. The Vendor shall be paid upon submission of invoices to the Purchaser after satisfactory delivery and acceptance of the items. While the Local Government Prompt Payment Act applies to ensure timely payment of Vendor invoices, the FSA CPP encourages Purchasers to make payment within thirty (30) days of acceptance of the item. The Local Government Prompt Payment Act is defined in Sections 218.70–218.79, *Florida Statutes*.

3.19 WARRANTY

All warranties shall begin at the time of commission and final acceptance by the Purchaser. The Purchaser's warranty should not be active for incomplete items and items delivered to a Third Party Supplier before final delivery.

Vendors should communicate with Purchasers on the required process for the registration of the warranty. Registration of the items may be required by the Manufacturer to activate the warranty. Warranty registration may vary based on the commissioning of the items. Vendors and Purchasers should follow any activation process outlined by the Manufacturer. Exceptions may exist for non-networked items.

3.20 QUARTERLY REPORTS

Quarterly reports are the contractual responsibility of each Vendor. Quarterly reports must be completed and submitted electronically. The quarterly report template shall be submitted using the tool provided by the FSA CPP. Quarterly reports which do not adhere to the required format or are not complete with all Purchase Orders received and/or deliveries made during the quarter will be returned to the reporting Vendor for correction.

Quarterly reports are due no later than the 15th day of the month following the end of the quarter. Quarterly reports shall follow the schedule below for the duration of the Contract. If a Contract extension is executed, the quarterly reports will maintain the same schedule for future reporting periods.

Contract Year 1: October 1, 2026 – September 30, 2027

Year 1 Quarter 1:	October 1 – December 31	Q1 Report Due:	January 15
Year 1 Quarter 2:	January 1 – March 31	Q2 Report Due:	April 15
Year 1 Quarter 3:	April 1 – June 30	Q3 Report Due:	July 15
Year 1 Quarter 4:	July 1 – September 30	Q4 Report Due:	October 15

Contract Year 2: October 1, 2027 – September 30, 2028

Year 2 Quarter 1:	October 1 – December 31	Q1 Report Due:	January 15
Year 2 Quarter 2:	January 1 – March 31	Q2 Report Due:	April 15
Year 2 Quarter 3:	April 1 – June 30	Q3 Report Due:	July 15
Year 2 Quarter 4:	July 1 – September 30	Q4 Report Due:	October 15

Quarterly reports must be submitted even if there are no sales or no deliveries in a quarter. If a Vendor has no sales within a quarter, the Vendor shall indicate “No sales this quarter” or “No deliveries this quarter” to the FSA CPP by e-mail to Reports@flsheriffs.org.

The FSA CPP reserves the right to modify the procedure for submitting quarterly reports during the term of the Contract.

Such a change shall not materially modify the substance of the information to be reported but may change the method by which future quarterly reports are to be submitted. In the event of such a change, the FSA CPP will provide written notice to all Vendors of the method by which future quarterly reports are to be submitted.

3.21 ADMINISTRATIVE FEE

The FSA CPP charges three quarters of one percent (.75%) to procure, process and administer the Contract. Payment of the administrative fees to the FSA CPP is the contractual responsibility of each awarded Vendor.

After receipt of payment from Contract purchases, the Vendor shall remit all administrative fees to the FSA CPP no later than fifteen (15) calendar days after the end of each quarter. All fees payable to the FSA CPP during any given quarter will be accompanied and supported by a quarterly report.

The administrative fee will remain payable to the FSA CPP and no relief from payment of the administrative fee, nor any additional charge to recoup the administrative fee will be permitted if a Vendor fails to incorporate the administrative fee in its bid pricing. The administrative fee should never be listed as a separate line item on any Purchase Order or invoice.

The administrative fee is based on the total Purchase Order amount of new items. This fee excludes any value given to Purchasers for trade-ins. Trade-ins, extended warranties and other exchanges will not reduce or impact the fee calculation.

The ACH form for electronic payment or wiring of funds is included in Appendix C. It is the preference of the FSA CPP that all payments be electronically paid and submitted. If ACH is not available, checks for the administrative fee can be sent to:

Florida Sheriffs Association
Cooperative Purchasing Program
2617 Mahan Drive
Tallahassee, FL 32308

3.22 LIQUIDATED DAMAGES

The Vendor warrants that the item supplied to the Purchaser shall conform in all respects to the standards set forth in the applicable FSA Base Specifications and the failure to comply with this condition will be considered as a breach of Contract. Any liquidated damages levied because of inadequacies or failures to comply with these requirements shall be borne solely by the Vendor responsible for same.

Failure to submit the administrative fee with accompanying quarterly reports to the FSA CPP within fifteen (15) calendar days following the end of each quarter may result in the imposition of liquidated damages. Vendors failing to submit administrative fees and/or quarterly reports will incur liquidated damages in the amount of $25.00 for each calendar day that fees and reports are past due, beginning on the 16th day following the end of the quarter.

If a civil action is initiated by the FSA to recover administrative fees or liquidated damages as set forth in this section, the prevailing party shall be entitled to its reasonable attorneys' fees and costs incurred in the litigation. The venue shall lie in the Circuit Court for the Second Judicial Circuit in and for Leon County, Florida.

When quarterly reports are late, liquidated damages are to be included in Vendor's Quarterly Report and administrative fee submission. Liquidated damages that remain unpaid beyond forty-five (45) calendar days can result in the FSA CPP, on behalf of the FSA, at its sole discretion, implementing contract compliance actions, including but not limited to, suspension, limited participation by items or

zones, disqualification from future solicitations, or termination of this Contract for cause pursuant to the Terms and Conditions.

Schedule of Liquidated Damages

Failure to communicate change of contact	$250.00 per infraction
Failure to communicate terminations of a product line	$25.00 per calendar day
Failure to communicate changes in assignment of contract	$25.00 per calendar day
Failure to submit quarterly report on time	$25.00 per calendar day
Failure to submit administrative fee on time	$25.00 per calendar day
Failure to report a Purchase Order to the FSA CPP within fifteen (15) calendar days of the Purchase Order issue date	$100.00 per Purchase Order
Failure to Report Sales	.0075 of the sales price plus 1.5% each month following the delivery date.

Vendor agrees and acknowledges that its failure to take any of the actions specified in the above schedule will result in liquidated damages to this Contract. Vendor agrees and acknowledges that these liquidated damages are not intended to be and do not constitute a penalty and that these amounts are reasonably calculated to compensate the FSA CPP for the damages that it will incur as a result of the Vendor's failure to take the specified actions.

Appendix A: Zone Map



WESTERN
BAY
CALHOUN
DIXIE
ESCAMBIA
FRANKLIN
GADSDEN
GULF
HOLMES
JACKSON
JEFFERSON
LAFAYETTE
LEON
LIBERTY
MADISON
OKALOOSA
SANTA ROSA
TAYLOR
WALTON
WAKULLA
WASHINGTON

NORTHERN
ALACHUA
BAKER
BRADFORD
CLAY
COLUMBIA
DUVAL
FLAGLER
GILCHRIST
HAMILTON
LEVY
MARION
NASSAU
PUTNAM
ST. JOHNS
SUWANEE
UNION
VOLUSIA

CENTRAL
BREVARD
CITRUS
DESOTO
HARDEE
HERNANDO
HIGHLANDS
HILLSBOROUGH
INDIAN RIVER
LAKE
MANATEE
OKEECHOBEE
ORANGE
OSCEOLA
PASCO
PINELLAS
POLK
ST. LUCIE
SARASOTA
SEMINOLE
SUMTER

SOUTHERN
BROWARD
CHARLOTTE
COLLIER
GLADES
HENDRY
LEE
MARTIN
MIAMI-DADE
MONROE
PALM BEACH

Appendix B: Bid Calendar

FSA26-EQU24.0 Bid Calendar	Date
Bid Announcement	3/30/2026
Voluntary Interested Bidder Workshop FSA26-EQU24.0	6/3/2026
New Items & Specifications Submissions Due	6/12/2026
Mandatory Pre-Bid Meeting FSA26-EQU24.0 and VendorLink Training	7/14/2026
Requests for Clarifications Due to the FSA	7/24/2026
The FSA Response to Requests for Clarifications	7/29/2026
Bid System Opens	7/31/2026
Cone of Silence	7/31/2026 - 9/23/2026
Bid Submissions Due	9/01/2026
Bid Tabulations Posted	9/02/2026
Public Bid Opening	9/02/2026
Bid Evaluations	9/8/2026 - 9/11/2026
Intent To Award	9/23/2026
Final Award	10/1/2026

Appendix C: ACH Payments

PROTECTING, LEADING & UNITING SINCE 1893
FLORIDA SHERIFFS ASSOCIATION

2617 Mahan Drive
Tallahassee, Florida 32308

p: (850) 877-2165 f: (850) 878-8665
flsheriffs.org

TO: All Customers of the Florida Sheriffs Association

SUBJECT: Automated Payments through ACH

The Florida Sheriffs Association values the integrity of our business operations and knows that our partners do as well. As we continue to strengthen this partnership, FSA invites each company to offer payments to FSA via ACH. It is our goal to secure payments and reduce fraudulent transactions and this will be our primary method of accepting payments due to recent efforts to defraud FSA. Florida Sheriffs Association can be added to your company's list of vendors authorized to be paid via electronic payment for no additional fee.

Florida Sheriffs Association's Banking Information is as follows:

Checking Account
Capital City Bank
Routing Number: 063100688
Account Number: 0010867001

Please email any payment remittance information to accounting@flsheriffs.org.

If you choose to make ACH payments to the association, there is no additional charge. The information above can be used to pay with a wire transfer as well, but if you choose to pay via wire, there is a charge of $25 per wire that you will need to add to your payment.

If you have any questions at all, please contact FSA Accounting at accounting@flsheriffs.org or 850-877-2165.

Sincerely,

Trish Eldridge

Director of Accounting and Finance
Florida Sheriffs Association

Appendix D: Federal Clause

Applicability of Third-Party Contract Provisions*

(Excluding micro-purchases, as defined in 48 C.F.R. Subpart 2.1, except Davis-Bacon requirements apply to construction contracts exceeding $2,000.) In addition to other provisions negotiated with Purchasers placing federally funded purchase orders, Vendors must comply with the following provisions upon award of a federally funded purchase order:

PROVISION	Professional Services/A&E	Operations/ Management	Construction	Materials & Supplies
Equal Employment Opportunity			All	
Davis-Bacon Act			>$2,000	
Copeland "Anti-Kickback" Act			>$2,000	
Contract Work Hours and Safety Standards Act	>$100,000	>$100,000	>$100,000	>$100,000
Rights to Inventions Made Under a Contract or Agreement	If the purchase order involves performance of experimental, developmental or research work	If the purchase order involves performance of experimental, developmental or research work	If the purchase order involves performance of experimental, developmental or research work	If the purchase order involves performance of experimental, developmental or research work
Clean Air Act	>$150,000	>$150,000	>$150,000	>$150,000
Federal Water Pollution Control Act	>$150,000	>$150,000	>$150,000	>$150,000
Debarment and Suspension	All	All	All	All
Byrd Anti-Lobbying Amendment	>$100,000	>$100,000	>$100,000	>$100,000
Procurement of Recovered Materials	All	All	All	All
Prohibition on Certain Telecommunications and Video Surveillance Services or Equipment	All	All	All	All
Domestic Preferences for Procurements	All	All	All	All

*References to the Code of Federal Regulations ("C.F.R.") or United States Code ("U.S.C.") were accurate

at the time of publication. It is the responsibility of the Bidder to ensure compliance is met of the referenced state and federal laws within the published rules.

EQUAL EMPLOYMENT OPPORTUNITY: Except as otherwise provided under 41 C.F.R. Part 60, all contracts that meet the definition of "federally assisted construction contract" in 41 C.F.R. Part 60-1.3 must include the equal opportunity clause provided under 41 C.F.R. 60-1.4(b), in accordance with Executive Order 11246, "Equal Employment Opportunity" (30 FR 12319, 12935, 3 C.F.R. Part, 1964-1965 Comp., p. 339), as amended by Executive Order 11375, "Amending Executive Order 11246 Relating to Equal Employment Opportunity," and implementing regulations at 41 C.F.R. part 60, "Office of Federal Contract Compliance Programs, Equal Employment Opportunity, Department of Labor." The clause set forth in 41 C.F.R. 60-1.4(b) is incorporated herein by reference. Vendor must comply with this clause and include this clause in all lower-tier federal assisted construction contracts.

DAVIS-BACON ACT, as amended (40 U.S.C. 3141-3148): When required by Federal program legislation, all prime construction contracts in excess of $2,000 awarded by non-Federal entities must include a provision for compliance with the Davis-Bacon Act (40 U.S.C. 3141-3144, and 3146-3148) as supplemented by Department of Labor regulations (29 C.F.R. Part 5, "Labor Standards Provisions Applicable to Contracts Covering Federally Financed and Assisted Construction"). In accordance with the statute, contractors must be required to pay wages to laborers and mechanics at a rate not less than the prevailing wages specified in a wage determination made by the Secretary of Labor. In addition, contractors must be required to pay wages not less than once a week. The non-Federal entity must place a copy of the current prevailing wage determination issued by the Department of Labor in each solicitation. The decision to award a contract or subcontract must be conditioned upon the acceptance of the wage determination. The non-Federal entity must report all suspected or reported violations to the Federal awarding agency. The contracts must also include a provision for compliance with the Copeland "Anti-Kickback" Act (40 U.S.C. 3145), as supplemented by Department of Labor regulations (29 C.F.R. Part 3, "Contractors and Subcontractors on Public Building or Public Work Financed in Whole or in Part by Loans or Grants from the United States"). The Act provides that each contractor or subrecipient must be prohibited from inducing, by any means, any person employed in the construction, completion, or repair of public work, to give up any part of the compensation to which he or she is otherwise entitled. The non-Federal entity must report all suspected or reported violations to the Federal awarding agency. Vendors performing construction must comply with all applicable provisions of the Davis-Bacon Act and include this clause in all lower-tier subcontracts for construction.

CONTRACT WORK HOURS AND SAFETY STANDARDS ACT (40 U.S.C., chapter 37): Vendor shall comply with Sections 102 and 107 of the Contract Work Hours and Safety Standards Act (40 U.S.C., chapter 37), as supplemented by Department of Labor regulations (29 C.F.R. part 5).

a. Overtime requirements. Neither Vendor nor any contractor or subcontractor contracting for any part of the purchase order work which may require or involve the employment of laborers or mechanics shall require or permit any such laborer or mechanic in any workweek in which he or she is employed on such work to work in excess of forty hours in such workweek unless such laborer or mechanic receives compensation at a rate not less than one and one-half times the basic rate of pay for all hours worked in excess of forty hours in such workweek.

b. Violation; liability for unpaid wages; liquidated damages. In the event of any violation of the clause set forth in Paragraph (a), Vendor and any subcontractor responsible therefore shall be liable for the unpaid wages. In addition, Vendor or such subcontractor shall be liable to the United States (in the case of work done under the Contract for the District of Columbia or a

territory, to such District or to such territory), for liquidated damages. Such liquidated damages shall be computed with respect to each individual laborer or mechanic, including watchmen and guards, employed in violation of the clause set forth in Paragraph (a), in the amount set forth in 29 C.F.R. § 5.5(b)(2), as adjusted annually for inflation, for each calendar day on which such individual was required or permitted to work in excess of the standard workweek of forty hours without payment of the overtime wages required by the clause set forth in Paragraph (a) of this section.

c. Withholding for unpaid wages and liquidated damages. Purchaser shall upon its own action or upon written request of an authorized representative of the Department of Labor withhold or cause to be withheld, from any moneys payable on account of work performed by Vendor or a subcontractor under the purchase order or any other Federal contract with Purchaser, or any other federally-assisted contract subject to the Contract Work Hours and Safety Standards Act, which is held by Purchaser, such sums as may be determined to be necessary to satisfy any liabilities of Vendor or its subcontractor for unpaid wages and liquidated damages as provided in the clause set forth in Paragraph (a).

d. Subcontracts. Vendor shall insert in any subcontracts over $100,000 for construction and other purposes that involve the employment of mechanics or laborers, the clauses set forth in Paragraphs (a) through (d) and also a clause requiring the subcontractors to include these clauses in any lower-tier subcontracts.

RIGHTS TO INVENTIONS MADE UNDER A CONTRACT OR AGREEMENT: If the Federal award meets the definition of "funding agreement" under 37 C.F.R. § 401.2 (a) and the recipient or subrecipient wishes to enter into a contract with a small business firm or nonprofit organization regarding the substitution of parties, assignment or performance of experimental, developmental, or research work under that "funding agreement," the recipient or subrecipient must comply with the requirements of 37 C.F.R. Part 401, "Rights to Inventions Made by Nonprofit Organizations and Small Business Firms Under Government Grants, Contracts and Cooperative Agreements," and any implementing regulations issued by the awarding agency. Vendor shall comply with these requirements when performing a purchase order involving experimental, developmental or research work and flow down this clause to lower-tier subcontractors performing such work.

CLEAN AIR ACT (42 U.S.C. 7401 et seq.) and the FEDERAL WATER POLLUTION CONTROL ACT (33 U.S.C. 1251 et seq.), as amended: Vendor agrees to comply with all applicable standards, orders or regulations issued pursuant to the Clean Air Act (42 U.S.C. 7401 et seq.) and the Federal Water Pollution Control Act as amended (33 U.S.C. 1251 et seq.). Violations shall be reported to the Federal awarding agency and the Regional Office of the Environmental Protection Agency (EPA). Vendor shall comply with the requirements of Clean Air Act and the Federal Water Pollution Control Act and include this clause in all lower-tier subcontracts with a value over $150,000.

DEBARMENT AND SUSPENSION (E.O.s 12549 and 12689): By accepting or performing this purchase order, Vendor certifies that it is not identified in the Exclusions area of the System for Award Management as being currently debarred, suspended, proposed for debarment, or otherwise excluded ("SAM Exclusion"). Vendor shall obtain similar certifications from its lower-tier subcontractors for each subcontract in excess of $25,000 and Vendor shall not award lower-tier subcontracts in excess of $25,000 to an entity subject to a SAM Exclusion.

LOBBYING RESTRICTIONS (31 U.S.C. 1352): By accepting or performing this purchase order, Vendor certifies that it will not and has not used Federal appropriated funds to pay any person or organization

for influencing or attempting to influence an officer or employee of any agency, a member of Congress, officer or employee of Congress, or an employee of a member of Congress in connection with obtaining any Federal contract, grant or any other award covered by 31 U.S.C. 1352. Vendor shall also disclose to Purchaser any lobbying with non-Federal funds that takes place in connection with obtaining any Federal award or contract. Vendor shall flow down this clause and require this certification for lower-tier subcontractors with a subcontract of $100,000 or more. Vendor shall provide its disclosure and all disclosures received from lower-tier subcontractors to Purchaser.

PROCUREMENT OF RECOVERED MATERIALS: A Non-Federal entity that is a state agency or agency of a political subdivision of a state and its contractors must comply with section 6002 of the Solid Waste Disposal Act, as amended by the Resource Conservation and Recovery Act. The requirements of Section 6002 include procuring only items designated in guidelines of the Environmental Protection Agency ("EPA") at 40 C.F.R. part 247 that contain the highest percentage of recovered materials practicable, consistent with maintaining a satisfactory level of competition, where the purchase price of the item exceeds $10,000 or the value of the quantity acquired during the preceding fiscal year exceeded $10,000; procuring solid waste management services in a manner that maximizes energy and resource recovery; and establishing an affirmative procurement program for procurement of recovered materials identified in the EPA guidelines. Vendors shall comply with this clause and include this clause in all lower-tier subcontracts.

PROHIBITION ON CERTAIN TELECOMMUNICATIONS AND VIDEO SURVEILLANCE SERVICES OR EQUIPMENT:

a. Recipients and subrecipients are prohibited from obligating or expending loans or grant funds to:

1. Procure or obtain;
2. Extend or renew a contract to procure or obtain; or
3. Enter into a contract (or extend or renew a contract) to procure or obtain equipment, services, or systems that uses covered telecommunications equipment or services as a substantial or essential component of any system, or as critical technology as part of any system. As described in Public Law 115-232, section 889, covered telecommunications equipment is telecommunications equipment produced by Huawei Technologies Company or ZTE Corporation (or any subsidiary or affiliate of such entities).

   i. For the purpose of public safety, security of government facilities, physical security surveillance of critical infrastructure, and other national security purposes, video surveillance and telecommunications equipment produced by Hytera Communications Corporation, Hangzhou Hikvision Digital Technology Company, or Dahua Technology Company (or any subsidiary or affiliate of such entities).

   ii. Telecommunications or video surveillance services provided by such entities or using such equipment.

   iii. Telecommunications or video surveillance equipment or services produced or provided by an entity that the Secretary of Defense, in consultation with the Director of the National Intelligence or the Director of the Federal Bureau of Investigation, reasonably believes to be an entity owned or controlled by, or otherwise connected to, the government of a covered foreign country.

b. In implementing the prohibition under Public Law 115-232, section 889, subsection (f), paragraph (1), heads of executive agencies administering loan, grant, or subsidy programs shall

prioritize available funding and technical support to assist affected businesses, institutions and organizations as is reasonably necessary for those affected entities to transition from covered communications equipment and services, to procure replacement equipment and services, and to ensure that communications service to users and customers is sustained.

c. See Public Law 115-232, section 889, for additional information.

DOMESTIC PREFERENCES FOR PROCUREMENTS:

a. As appropriate and to the extent consistent with law, the non-Federal entity should, to the greatest extent practicable under a Federal award, provide a preference for the purchase, acquisition, or use of goods, products, or materials produced in the United States (including but not limited to iron, aluminum, steel, cement, and other manufactured products). Vendor agrees to comply with the requirements of this clause and includes the requirements of this clause in all subawards including all contracts and purchase orders for work or products under this award.

b. For purposes of this section:

1. "Produced in the United States" means, for iron and steel products, that all manufacturing processes, from the initial melting stage through the application of coatings, occurred in the United States.
2. "Manufactured products" means items and construction materials composed in whole or in part of non-ferrous metals such as aluminum; plastics and polymer-based products such as polyvinyl chloride pipe; aggregates such as concrete; glass, including optical fiber; and lumber.

FSA Cooperative Purchasing Program



FSA26-EQU24.0: Equipment
Base Specifications

FSA26-EQU24.0: Equipment
Item Group Specifications

Item Groups Summary

All bid items shall be built to meet or exceed FSA Cooperative Purchasing Program base specifications and shall include all standard manufacturer equipment unless otherwise specified. When requested by the purchaser, vendors must submit detailed specifications for the item and options offered.

- All Terrain & Utility Vehicles: All Terrain Vehicles (Quad)
- All Terrain & Utility Vehicles: Utility Vehicles (Side-by-Side)
- All Terrain & Utility Vehicles: Electric Utility Vehicles (Side-by-Side)
- Blower: Ride On Blower*
- Boat: Aquatic Weed Cutter Workboat
- Bulldozer: 70hp
- Bulldozer: 90hp
- Bulldozer: 180hp
- Chipper: Brush Chipper
- Compactor: 80,000 lbs. Landfill Compactor
- Compressor: Air Compressor - Trailer Mounted
- Dump Truck: Articulating Off Road Dump Truck - 50,000 lbs. Payload
- Excavator: All Terrain Walking Excavator
- Excavator: Hydraulic Excavator - 15,590 lbs. Operating Weight
- Excavator: Hydraulic Excavator - 38,000 lbs. Operating Weight
- Excavator: Hydraulic Excavator - 76,550 lbs. Operating Weight
- Excavator: Mini Hydraulic Excavator - 7,105 lbs. Operating Weight
- Excavator: Telescopic Excavator - 45,000 lbs. Operating Weight - Tracked Type
- Excavator: Telescopic Excavator - 47,000 lbs. Operating Weight - 6x6 Wheeled Type
- Excavator: Vacuum Excavator - Trailer Mounted
- Excavator: Vacuum Excavator Body, Truck Mounted - 12 cubic yd.*
- Excavator: Wheeled Hydraulic Excavator - 42,000 lbs. Operating Weight
- Forklift: Cushion Tire - 4,000 lbs. Capacity
- Forklift: Rough Terrain Forklift - 5,000 lbs. Capacity
- Forklift: Telescopic Tool Carrier/Telehandler

- Generator: 60kW Stationary
- Generator: 125kW Stationary
- Generator: 150kW Mobile
- Generator: 500kW Mobile
- Generator: 500kW Stationary
- Horizontal Directional Drill
- Leaf Collector: Trailer Mounted
- Lift: Articulated Boom Lift - Self Propelled Tracked*
- Lift: Scissor Lift - Self Propelled
- Light Tower: Hybrid Light Tower
- Light Tower: Light Tower - Trailer Mounted
- Loader: Loader Backhoe - 4x4
- Loader: Mini Skid Steer - 1,000 lbs. Operating Capacity - Tracked Type, Stand Up Operator*
- Loader: Skid Steer - 1,850 lbs. Operating Capacity - Wheeled Type
- Loader: Skid Steer - 2,800 lbs. Operating Capacity - Wheeled Type
- Loader: Skid Steer - 3,100 lbs. Operating Capacity - Tracked Type
- Loader: Wheel Loader - 1.5 cubic yd.
- Loader: Wheel Loader - 3.0 cubic yd.
- Loader: Wheel Loader - 5.75 cubic yd.
- Low Speed Vehicle: Electric Type
- Motor Grader: Large
- Motor Grader: Small
- Mower: 15ft. Flex Wing Rotary Mower
- Mower: Remote Controlled Brush Mower
- Mower: Electric Zero Turn Radius Mower
- Mower: Zero Turn Radius Mower
- Pallet Jack: Electric 4,500 lbs. Capacity
- Pipe Inspection: Battery Operated Pipe Crawler Inspection System
- Pipe Inspection: External Power Pipe Crawler Inspection System*
- Portable Signal: Portable Signal - Trailer Mounted*

FSA26-EQU24.0: Equipment
Item Group Specifications

- Pump: Mobile Pump
- Roadway Advisory Board: Message Board/Automatic License Plate Reader*
- Roadway Advisory Board: Mobile Message Board
- Roadway Advisory Board: Mobile Speed Board
- Roadway Advisory Board: Mobile Speed Board/Automatic License Plate Reader
- Roadway Advisory Board: Mobile Traffic Advisory/Direction Signal Board
- Roller: Compact 2,900 lbs. - Double Drum Roller - 38in. Width*
- Roller: Compact, Pneumatic Asphalt Roller*
- Roller: Compaction Roller 15,000 lbs. - Single Drum
- Roller: Large 22,000 lbs. - Double Drum Roller - 70in. Width
- Roller: Small 5,400 lbs. - Double Drum Roller - 47in. Width
- Security Camera: Security Camera Tower - Trailer Mounted*
- Sewer Cleaner: Combination Sewer Cleaning/Vacuum Machine Body - 10 cubic yd.
- Sewer Cleaner: Easement Machine*
- Sewer Cleaner: Trailer Mounted Sewer Cleaner
- Shop Tools & Equipment
- Shredder: Mobile Shredder/Grinder
- Simulator System: Equipment Operator Simulator*
- Solid Waste Material Handler: Wheeled Type
- Stump Cutter
- Sweeper: 3-Wheel Mechanical or Regenerative Air Sweeper
- Sweeper: Mechanical Broom Street Sweeper
- Sweeper: Compact Air Sweeper - 2.3 cubic yd.
- Sweeper: Regenerative Air Street Sweeper
- Sweeper: Self-Propelled Hydrostatic Broom
- Sweeper: Tow Behind Beach Sweeper*
- Sweeper: Vacuum Street Sweeper*
- Sweeper: Walk Behind Floor Sweeper/Scrubber*
- Tactical Vehicle: Skid Steer Mounted (The Rook)
- Tool Carrier: Hydrostatic Drive
- Tractor: Agriculture Tractor - 4x2

FSA26-EQU24.0: Equipment
Item Group Specifications

- Tractor: Compact Articulating Tractor - AWD
- Tractor: Small Agriculture Tractor - 4x4
- Tractor: Tractor with Boom Mower - 4x4
- Trailer: Container Chassis Trailer - 73,900 lbs. GVWR*
- Trailer: Deck Over Flatbed Trailer - 14,000 lbs. GVWR
- Trailer: Deck Over Equipment Trailer - 40,000 lbs. GVWR
- Trailer: Detachable Neck Lowboy Trailer - 100,000 lbs. GVWR
- Trailer: Enclosed Cargo Trailer - 7,000 lbs. GVWR
- Trailer: Flatbed Tilt Trailer - 40,000 lbs. GVWR*
- Trailer: Fixed Neck Lowboy Trailer - 70,000 lbs. GVWR
- Trailer: Hydraulic Drop Deck Trailer - 13,500 lbs. GVWR
- Trailer: Hydraulic Tail Trailer - 70,000 lbs. GVWR
- Trailer: Leachate Tanker - 6,500 gallons
- Trailer: Livestock Trailer - 7,000 lbs. GVWR
- Trailer: Mobile Fuel Trailer - 460 gallons*
- Trailer: Multi Tank Fuel/Service 880 gallons Non-Hazmat - 14,000 lbs. GVWR*
- Trailer: Pothole Patch Unit - 12,000 lbs. GVWR*
- Trailer: Pressure/Vacuum Trailer - 6,000 gallons*
- Trailer: Pull Behind Dump Trailer - 14,000 lbs. GVWR
- Trailer: Refrigeration/Freezer Trailer - 7,000 lbs. GVWR
- Trailer: Restroom Trailer ADA Compliant*
- Trailer: Sludge Trailer - 80,000 lbs. GVWR*
- Trailer: Utility/Equipment Trailer - 7,000 lbs. GVWR
- Trailer: Waste Trailer with Walking Floor
- Transfer Switch: 600 Amp Automatic Transfer Switch
- Trencher: Tractor Type*
- Trencher: Walk Behind Trencher
- Underground Locating Equipment: Ground Penetrating Radar
- Underground Locating Equipment: Utility Locator
- Vehicle Barrier: Road Closure Barrier System*
- Vehicle Lift: Above Ground Drive On Platform Lift, Pantograph Type*

- Vehicle Lift: In Ground Drive On Platform Lift, Scissor Type*
- Vehicle Lift: Mobile - 2 Column, Cabled
- Vehicle Lift: Mobile - 2 Column, Wireless
- Vehicle Lift: Mobile - 4 Column, Cabled
- Vehicle Lift: Mobile - 4 Column, Wireless
- Vehicle Lift: Mobile - 6 Column, Cabled
- Vehicle Lift: Mobile - 6 Column, Wireless
- Vehicle Lift: Mobile - 8 Column, Cabled
- Vehicle Lift: Mobile - 8 Column, Wireless
- Vehicle Lift: Above Ground - 2 Post Asymmetric Stationary Vehicle Lift 10k
- Vehicle Lift: Above Ground - 2 Post Symmetric Stationary Vehicle Lift 12k
- Vehicle Lift: Above Ground - 2 Post Symmetric Stationary Vehicle Lift 15k
- Vehicle Lift: Above Ground - 2 Post Symmetric Stationary Vehicle Lift 18k
- Vehicle Lift: Above Ground - 2 Post Versymmetric Stationary Vehicle Lift 10k
- Vehicle Lift: Above Ground - 4 Column, Alignment Lift with Front/Rear Jacks and Integrated Turntables and Slip Plates 14k
- Vehicle Lift: Above Ground - 4 Post Alignment Lift with Turnplates and Rolling Jack 30k*
- Vehicle Lift: Above Ground - 4 Posts, Lift 14k*
- Vehicle Lift: Above Ground - 4 Posts, Lift 30k*

**New Item Group*

FSA26-EQU24.0: Equipment
Item Group Specifications

All Terrain & Utility Vehicles: All Terrain Vehicles (Quad)

The unit in this group must meet or exceed the following FSA Cooperative Purchasing Program specifications.

FSA Base Specifications

- Engine: Manufacturer's gas or diesel engine, 30 hp
- Transmission: Manufacturer's standard automatic transmission
- Chassis: 2- or 4-wheel drive
- Tires and Wheels: Front and rear all-terrain tires
- Weight: 580 lbs.

FSA26-EQU24.0: Equipment
Item Group Specifications

All Terrain & Utility Vehicles: Utility Vehicles (Side-by-Side)

The unit in this group must meet or exceed the following FSA Cooperative Purchasing Program specifications.

FSA Base Specification

- Engine: Manufacturer's gas or diesel engine, 20 hp
- Transmission: Manufacturer's standard automatic transmission
- Drivetrain: 2- or 4-wheel drive
- Tires and Wheels: Front and rear all terrain tires
- Weight: 900 lbs.
- ROPS: ROPS protection

FSA26-EQU24.0: Equipment
Item Group Specifications

All Terrain & Utility Vehicles: Electric Utility Vehicles (Side-by-Side)

The unit in this group must meet or exceed the following FSA Cooperative Purchasing Program specifications.

FSA Base Specification

- Dimensions (Approximate): Length- 113", height- 51", width- 56", wheelbase- 74", curb weight- 1,000 lbs., GVW- 2,900 lbs., 1,200 lbs. towing capacity
- Power: heavy duty batteries, 48-volt, charger included
- Transmission/Axle: Transaxle, 2-wheel drive
- Chassis/Steering/Suspension: frame type chassis, suspension matched for GVW of vehicle
- Tires And Wheels: Off/on road type tires, wheels rated for GVW of vehicle, tires to be traction type
- Performance: 40-mile range, 15 mph
- Brakes: Manual parking brake, disc or drum type, 2- or 4-wheel brakes
- Body: Rear mounted hitch for towing, pick-up type box with sides and tailgate, 2 passenger seating
- ROPS: ROPS protection

FSA26-EQU24.0: Equipment
Item Group Specifications

Blower: Ride On Blower

The unit in this group must meet or exceed the following FSA Cooperative Purchasing Program specifications.

FSA Base Specification

- Engine: 35 hp gas engine, positive feed oil system
- Drive Train/Axles: Zero turn type, spin on hydraulic filters
- Blower: 6,000 cfm output ,23” diameter, steel, balanced, steel blower housing, electric clutch
- Blower Discharge: 180 degrees of nozzle rotation, 16 degrees vertical tilt
- Wheels: Front wheels- 13x5-6 ribbed, flat free, Rear wheels- 24x 12-12 turf
- Comfort & Convenience: Stand up operator type

FSA26-EQU24.0: Equipment
Item Group Specifications

Boat: Aquatic Weed Cutter Workboat

The unit in this group must meet or exceed the following FSA Cooperative Purchasing Program specifications.

FSA Base Specification

- General Dimensions: Height- 8', width- 7'3", length- 15', height from waterline- 48", boat draft- 4" to 6", weight- 2,285 lbs.
- Engine: 3-cylinder diesel engine, liquid cooled electric start, and charging system
- Hydraulics: Triple pump design, 27 GPM, eco-friendly hydraulic fluid
- Propulsion: Twin hydraulic outdrives, weed and mud design propellers
- Vessel Hull: Fiberglass/Kevlar design, deck mounted cutter and loader
- Boom Cutter: Hydraulic drive, full articulation to cut 5' below waterline
- Front End Loader: Marine-type vegetation bucket
- Operator Station: All hydraulic function/propulsion function controls
- Trailer: Trailer to be designed specifically for this workboat. Must meet all federal, state, and local laws for a trailer operated on the highway.

FSA26-EQU24.0: Equipment
Item Group Specifications

Bulldozer: 70hp

The unit in this group must meet or exceed the following FSA Cooperative Purchasing Program specifications.

FSA Base Specification

- Weight: Operating weight- 15,800 lbs.
- Engine: 70 hp diesel
- Transmission: Hydrostatic, variable speed
- Undercarriage: 5 rollers each side, 16” grouser width
- Dozer Blade: Width- 96”, height- 32”, PAT type blade, hydraulically controlled
- Operator Station: Enclosed ROPS cab, A/C and heat, suspension seat, work lights

FSA26-EQU24.0: Equipment
Item Group Specifications

Bulldozer: 90hp

The unit in this group must meet or exceed the following FSA Cooperative Purchasing Program specifications.

FSA Base Specification

- Weight: Operating weight- 18,300 lbs.
- Engine: 90 hp diesel
- Transmission: Hydrostatic, variable speed
- Undercarriage: 6 rollers each side, 18” grouser width
- Dozer Blade: Width- 104”, height- 36”, PAT type blade, hydraulically controlled
- Operator Station: Enclosed ROPS cab, A/C and heat, suspension seat, work lights

FSA26-EQU24.0: Equipment
Item Group Specifications

Bulldozer: 180hp

The unit in this group must meet or exceed the following FSA Cooperative Purchasing Program specifications.

FSA Base Specification

- Weight: Operating weight- 45,000 lbs.
- Engine: 180 hp diesel engine
- Transmission: Power shift (3 forward, 1 reverse minimum) or hydrostatic drive (variable)
- Undercarriage: 7 rollers each side, 24" grouser width
- Dozer Blade: Width- 128", height- 48”, PAT type blade, hydraulically controlled
- Operator Station: Enclosed ROPS cab, A/C and heat, suspension seat, work lights

FSA26-EQU24.0: Equipment
Item Group Specifications

Chipper: Brush Chipper

The unit in this group must meet or exceed the following FSA Cooperative Purchasing Program specifications.

FSA Base Specification

- Weight: 6,800 lbs.
- Engine: 122 hp diesel engine
- Trailer: Surge or electric brakes, and trailer sized for GVW of machine, and DOT compliant
- Feed System: 15” chipping capacity, infeed throat opening- 20” x 15”, serrated infeed rollers, hydraulically driven, safety control bar around infeed opening for emergency stop
- Chipper Drum or Disc: Drum type- 22” diameter x 22” width, 2 knife pockets 180 degrees apart, dual edge reversible knives, extreme duty bearings, adjustable bedknife (reversible), disc type- 37” x 2” diameter disc, 4 knives reversible
- Chipper Housing: Easy access door for knife changes, drop down door for anvil adjustment or clean out
- Discharge Chute: Rotation of 270 degrees, adjustable chip deflector locking pin for chute rotation
- Miscellaneous: engine shutdown system, locking toolbox, vandalism protection

FSA26-EQU24.0: Equipment
Item Group Specifications

Compactor: 80,000 lbs. Landfill Compactor

The unit in this group must meet or exceed the following FSA Cooperative Purchasing Program specifications.

FSA Base Specification

- Weight: Operating weight- 80,000 lbs.
- Engine: Turbocharged diesel engine 400 hp
- Transmission: Mechanical or hydrostatic drive will be acceptable, 2 speeds forward and 2 speeds reverse
- Operating Station: Enclosed sound suppressed cab, air filtration system, air conditioned, heater and defroster, gauges and engine monitoring shutdown system, adjustable suspension seat, outside mirrors, work lights, windshield wipers and washer
- Wheels: Compaction wheels- 48” width minimum, wheel diameter- 58”, chevron chopper blades, or weld-on/pin-on teeth type wheels acceptable, anti-wire wrapping device and cleaner bar if applicable
- Blade: Straight or U-type trash blade acceptable, 14’ blade width, 6’ blade height, full width trash screen on top of blade, bolt on cutting edges
- Miscellaneous: Fully shielded engine compartment, removable belly pan, landfill shielding package

FSA26-EQU24.0: Equipment
Item Group Specifications

Compressor: Air Compressor - Trailer Mounted

The unit in this group must meet or exceed the following FSA Cooperative Purchasing Program specifications.

FSA Base Specification

- Weight: 1,950 lbs.
- Engine: 49 hp diesel engine, engine protection system
- Compressor: 185 cfm at 100 psi, rotary or reciprocating style compressor, 2 service valves
- Trailer: Sized for GVW of machine, DOT compliant
- Enclosure: Fixed weather enclosure over entire engine/compressor, 1 full size toolbox

FSA26-EQU24.0: Equipment
Item Group Specifications

Dump Truck: Articulating Off Road Dump Truck - 50,000 lbs. Payload

The unit in this group must meet or exceed the following FSA Cooperative Purchasing Program specifications.

FSA Base Specification

- Weight: Operating weight 40,000 lbs.
- Engine: Turbocharged diesel engine 265 hp
- Transmission: 6 speeds forward, 1 speed reverse, hydraulic retarder
- Brakes: Disc type service brakes, disc type parking brake
- Axles & Differentials: Differential locks, inter axle differential lock
- Tires: Radial off road hauler tires, sized for GVW of machine
- Steering: 45-degree left or right articulation angle, secondary electric steering system for emergency steering
- Operating Station: Enclosed cab to be pressurized, heated, air conditioned and filtered, built in ROPS/FOPS protection, suspension type operators seat with seat belt, cab instrumentation or engine monitoring system with audible alarms, tinted glass windows, sun visor, front and rear intermittent windshield wipers, work lights, headlights, stop, tail and turn signal lights, left and right mirrors
- Body: Dump body tipping angle 70 degrees, mud flaps, two single stage double acting body hoist cylinders, 18 yd. heaped capacity
- Miscellaneous: 95-gallon fuel tank, guard or shielding package

FSA26-EQU24.0: Equipment
Item Group Specifications

Excavator: All Terrain Walking Excavator

The unit in this group must meet or exceed the following FSA Cooperative Purchasing Program specifications.

FSA Base Specification

- Weight: 15,873 lbs. 2x4, 17,196 lbs. with 4x4 option
- Engine/Cab: 95 hp diesel engine, air conditioned and heated, enclosed ROPS cab equipped with manufacturer-provided emergency egress that remains functional regardless of boom position, gauges or warning indicators, mirrors, air suspension seat, full size cab, working lights
- Travel System: High-speed travel- 5 mph, grade-ability 70%, four tires
- Hydraulic System: Digging depth- 15’4”, auxiliary hydraulic circuit and controls plumbed to the end of stick with disconnect, stabilizers to be individually controlled in the vertical and horizontal positions
- Bucket: 4’ wide grading bucket, supplied with machine

FSA26-EQU24.0: Equipment
Item Group Specifications

Excavator: Hydraulic Excavator - 15,590 lbs. Operating Weight

The unit in this group must meet or exceed the following FSA Cooperative Purchasing Program specifications.

FSA Base Specification

- Weight: Operating weight- 15,590 lbs.
- Engine: 53 hp diesel engine
- Undercarriage: Overall track length 9’ 1”, overall track width 7’ 5” shoe width 17”
- Operating Station: ROPS enclosed cab to be air conditioned, heated and pressurized filtration system, opening front windshield, adjustable suspension type seat with safety belt, tinted safety glass, engine monitoring system with audible alarms, work lights
- Stick, Boom, Bucket: Boom and stick combination to allow minimum reach at ground level of 20’ 11”, bucket to be general purpose bucket, appropriately sized for machine and included

FSA26-EQU24.0: Equipment
Item Group Specifications

Excavator: Hydraulic Excavator - 38,000 lbs. Operating Weight

The unit in this group must meet or exceed the following FSA Cooperative Purchasing Program specifications.

FSA Base Specification

- Weight: Operating weight- 38,000 lbs.
- Engine: Turbocharged diesel engine 113 hp
- Undercarriage: Overall track length 12’ 10”, overall track width 6’ 6” shoe width 24”
- Operating Station: ROPS enclosed cab to be air conditioned, heated and pressurized filtration system, intermittent windshield wipers, opening front windshield, adjustable suspension type operator seat with safety belt, work lights
- Stick, Boom, Bucket: Boom and stick combination to allow minimum reach at ground level of 28’ 7”, bucket to be general purpose bucket, appropriately sized for machine and included

FSA26-EQU24.0: Equipment
Item Group Specifications

Excavator: Hydraulic Excavator - 76,550 lbs. Operating Weight

The unit in this group must meet or exceed the following FSA Cooperative Purchasing Program specifications.

FSA Base Specification

- Weight: Operating weight- 76,550 lbs.
- Engine: Turbocharged diesel engine 257 hp,
- Undercarriage: Overall track length 16’ 2”, overall track width 10’ 6”, shoe width 24”
- Operating Station: ROPS enclosed cab to be air conditioned, heated and pressurized filtration system, intermittent windshield wipers, opening front windshield, adjustable suspension type operator seat with safety belt, tinted safety glass, engine monitoring system with audible alarm, work lights
- Stick, Boom, Bucket: Boom and stick combination to allow minimum reach at ground level of 35’ 6”, bucket to be a general-purpose bucket, appropriately sized for machine and included

FSA26-EQU24.0: Equipment
Item Group Specifications

Excavator: Mini Hydraulic Excavator - 7,105 lbs. Operating Weight

The unit in this group must meet or exceed the following FSA Cooperative Purchasing Program specifications.

FSA Base Specification

- Weight: 7,105 lbs.
- Engine: Diesel engine, 23 hp
- Cab: ROPS open canopy, gauges or warning indicators for engine, work lights
- Tracks: 11” wide rubber belt tracks
- Stick, Boom, Bucket: Ground level reach of 15’ 8” minimum, auxiliary hydraulic circuit plumbed to the end of stick with disconnect, backfill blade, and general-purpose bucket sized appropriately for machine and included

FSA26-EQU24.0: Equipment
Item Group Specifications

Excavator: Telescopic Excavator - 45,000 lbs. Operating Weight - Tracked Type

The unit in this group must meet or exceed the following FSA Cooperative Purchasing Program specifications.

FSA Base Specification

- Weight: Operating weight 45,000 lbs.
- Engine: Turbocharged diesel, 170 hp
- Track Drive: 2-speed automatic with manual override, motors each track, planetary drives, travel speed high 3.4 mph, low 1.9 mph, automatic parking brake, individual track control
- Tracks: 23” pad size
- Operator Station: Enclosed cab, acoustical lined, adjustable seat, tinted safety glass, filtered fresh air, heater, air conditioned, and defroster, wipers and washers, skylight, work lights
- Safety Items: Electric horn, movement alarm, fire extinguisher, mirrors
- Hydraulic System: Hydraulic oil cooler, electronic hydraulic system monitor, automatic swing brake
- Boom: Telescopic boom, 180-degree boom rotation, 30’ reach at ground level
- Bucket: 60” ditching bucket provided with machine, quick attach type

FSA26-EQU24.0: Equipment
Item Group Specifications

Excavator: Telescopic Excavator - 47,000 lbs. Operating Weight - 6x6 Wheeled Type

The unit in this group must meet or exceed the following FSA Cooperative Purchasing Program specifications.

FSA Base Specification

- Weight: Operating weight 47,000 lbs.
- Carrier: Diesel engine, 250 hp, 6-speed automatic transmission, transfer case with front axle disconnect, one person carrier cab, air ride seat, heater, air conditioning, and defroster, windshield wipers, tinted glass, isolated and acoustic lined, gauges to monitor engine functions, frame sized for GVW and stress of mounted upper structure
- Safety: Electric horn, west coast mirrors with convex spot mirrors, tow hooks, fire extinguisher, backup alarm
- Front Axle: 16,000 lbs. front drive axle, leaf spring suspension, air brakes, automatic slack adjuster, integral power steering, hydraulic axle lockouts, 425/65R22.5 on/off road tires
- Rear Axle: Tandem axles 40,000 lbs., Hendrickson rear suspension, air brakes, automatic slack adjusters, 11R24.5 traction type tires
- Upper Structure: Hydraulic system- 80 hp drive motor, 44 hp swing motor, automatic swing park brake, hydraulic remote control- travel and steering controls in upper structure cab, automatic brakes and axle lockouts, movement alarm, upper structure cab- isolated and acoustic lined, tinted safety glass, adjustable operators seat, heater, air conditioning, and defroster, work lights, wipers and washers, mirrors on left and right, skylight upper structure control- electronic joysticks on adjustable pedestals, engine monitoring lights or gauge with audible warning or automatic shutdown low/high travel switch, electric horn, engine speed control.
- Boom, Stick, Bucket: Quick attach type, 60” ditching bucket provided with machine, telescopic type boom, 180-degree boom rotation, 30’ reach at ground level

FSA26-EQU24.0: Equipment
Item Group Specifications

Excavator: Vacuum Excavator - Trailer Mounted

The unit in this group must meet or exceed the following FSA Cooperative Purchasing Program specifications.

FSA Base Specification

- Weight: 14,000 lbs. GVWR
- Engine: 36 hp diesel engine, fully enclosed sound attenuated engine enclosure (including vacuum pump and high-pressure water pump)
- Vacuum Pump: 580 cfm at 15” of mercury, washable filtration cylinders, reverse pressure (to clear hose and offload liquids)
- High Pressure Water System: Minimum 2,000 psi at 4+ GPM water pump, low water automatic shutdown, two 100-gallon poly water tanks, 50’ high pressure water hose on hose reel, 5’ and 3’ wand and control handle
- Controls: Lockable and waterproof, curbside located, oil pressure, water temperature, fuel and vacuum gauge, electronic throttle
- Tank: Full open rear door, hydraulically opened, twin dump cylinders, 6” stainless steel portal shutoff, 800-gallon debris tank capacity
- Boom: 4” pickup hose, hydraulically powered in/out and up/down, boom cradle, 360-degree movement, 2 dielectric 3” suction wands, 33’ rubber suction hose
- Trailer: Sized for GVW of machine and DOT compliant

FSA26-EQU24.0: Equipment
Item Group Specifications

Excavator: Vacuum Excavator Body, Truck Mounted - 12 cubic yd.

The unit in this group must meet or exceed the following FSA Cooperative Purchasing Program specifications.

Note: Incomplete unit. This is a specification for a vacuum excavator unit to be mounted on an appropriately sized cab / chassis truck, provided by the purchaser. Agencies purchasing this unit will provide a cab / chassis truck of appropriate size, GVWR, and options necessary to have the selected vacuum unit mounted on. It is recommended the vendor of the vacuum unit and cab/chassis manufacturer be contacted to assist with determining performance and compatibility needs prior to purchase.

FSA Base Specification

- Air/Vacuum System: Positive displacement vacuum pump or centrifugal compressor, 3600 CFM @18 hg, muffler, vacuum relief valves, centrifugal separator with clean out
- Debris Tank: 12 cubic yd. capacity, 45-degree hydraulic dump, top hinged, hydraulic door locks, sight glass or indicator, drain valve with hose, check ball system or vacuum breaker
- Boom Assembly: 180-degree boom working area, hydraulic up/down, clean out port, transport cradle, 8” boom hose, boom control
- Water Pump: 2,200 psi, 10 gpm, pressure relief valve, wash down gun with relief valve, hose reel
- Water Tank: 1,000-gal capacity, curb side fill, level indicators
- Drive System: Hydrostatic, PTO, or transfer case type
- Miscellaneous: Work lights, warning lights

FSA26-EQU24.0: Equipment
Item Group Specifications

Excavator: Wheeled Hydraulic Excavator - 42,000 lbs. Operating Weight

The unit in this group must meet or exceed the following FSA Cooperative Purchasing Program specifications.

FSA Base Specification

- Weight: Operating weight- 42,000 lbs.
- Engine: Turbocharged diesel engine 140 hp
- Travel System: Travel speed of 21 mph
- Carrier: Traction type tires sized for GVW of machine
- Operating Station: Enclosed cab to be air conditioned, heated, and pressurized filtration system, intermittent windshield wipers, opening front windshield, vibration dampening cab mounts, adjustable suspension type operator seat with safety belt, tinted safety glass, engine monitoring system with audible alarms, work lights, stop/tail/turn and emergency flashers
- Stick, Boom, Bucket: Boom and stick combination to allow reach at ground level of 30', front blade, digging bucket to be a general-purpose bucket, appropriately sized for machine and included
- Outriggers: Rear outriggers

FSA26-EQU24.0: Equipment
Item Group Specifications

Forklift: Cushion Tire - 4,000 lbs. Lift Capacity

The unit in this group must meet or exceed the following FSA Cooperative Purchasing Program specifications.

FSA Base Specification

- Weight: 6,900 lbs.
- Lift Height: 130”
- Lift Capacity: 4,000 lbs.
- Engine: 50 hp, LP gas engine
- Transmission: Powershift type, inching pedal, 1 speed forward, 1 speed reverse
- Chassis: Wheelbase- 46", tread width- 33" (with standard tires), ground clearance at lowest point- 3"
- Tire size: Front- 18.0 x 7 x 12 cushion tire, rear- 14.0 x 5 x 10 cushion tire, steering radius- 72"
- Brakes: Hydraulic service brakes, mechanical parking brake
- Lift: Two stage lift mast, adjustable fork spacing, forward/backward tilt
- Operator Station: FOPS/ROPS protection, open canopy, work lights, seat belts, ANSI compliant

FSA26-EQU24.0: Equipment
Item Group Specifications

Forklift: Rough Terrain Forklift - 5,000 lbs. Lift Capacity

The unit in this group must meet or exceed the following FSA Cooperative Purchasing Program specifications.

FSA Base Specification

- Weight: 12,800 lbs.
- Lift Height: 14’
- Lift Capacity: 5,000 lbs.
- Engine: 70 hp diesel
- Transmission: FWD/rev shuttle shift, 4WD
- Chassis: Front track width 80”, turning radius 13’
- Tires: Front 16.9-24, rear 12-16.5 lug type tires
- Lift: 3 stage, side shift, adjustable fork spacing, FWD/backward tilt, load cushioning
- Operator Station: FOP/ROP protection, open canopy, work lights, seat belt, ANSI compliant

FSA26-EQU24.0: Equipment
Item Group Specifications

Forklift: Telescopic Tool Carrier/Telehandler

The unit in this group must meet or exceed the following FSA Cooperative Purchasing Program specifications.

FSA Base Specifications

- Weight: 17,155 lbs.
- Lift Height: 42’
- Lift Capacity: 7,700 lbs.
- Forward Reach: 26’
- Engine: 100 hp, diesel turbocharged
- Transmission: Hydrostatic drive, 2 travel speeds, low speed 3 mph, high speed 18 mph, AWD
- Chassis: 15.5 x 25 traction type tires, foam filled, 12’ turning radius, 3 steering modes- all wheel, crab, and front wheel
- Operator Station: ROPS/FOPS enclosed cab with air conditioning and heat, suspension seat, seat belt, work lights, safety lights, warning beacon, engine instrumentation or monitoring system

FSA26-EQU24.0: Equipment
Item Group Specifications

Generator: 60kW Stationary

The unit in this group must meet or exceed the following FSA Cooperative Purchasing Program specifications.

FSA Base Specification

- Generator Requirements: Standby rated 60 kW, 75 kVA, 0.8 power factor, 480V, 3-phase, 60 Hz, 1,800 RPM. Generator shall be directly coupled to the engine and meet IEC G3 performance requirements and UL 2200 certification.
- Engine: Water-cooled diesel engine sized for generator output and compliant with applicable emissions requirements.
- Controls: Microprocessor-based control system providing generator operating, monitoring, protection, and control functions.
- Enclosure/Silencer: Factory-assembled weather-protective, sound-attenuated enclosure including control panel, starting batteries, critical grade silencer, companion flanges, and flexible stainless-steel exhaust connection, sound attenuated enclosures noise level not to exceed 75 dBA measured at 23 ft.
- Fuel Tank: Integral double-wall sub-base fuel tank meeting UL 142 and applicable FDEP requirements with minimum 24-hour runtime at full rated load, 110% secondary containment, mechanical fuel gauge, lockable fuel fill, low fuel level alarm, and fuel tank rupture alarm.
- Battery Charger: Integral automatic battery charger with boost and float charging modes.
- Startup & Commissioning: Vendor shall coordinate startup and commissioning activities following installation by others. A factory-trained technician shall perform one (1) day of startup and operational testing and provide operator training.
- Warranty & Documentation: Generator shall include all standard manufacturer equipment and accessories. Initial fill of oil and coolant shall be included (fuel provided by others). One complete set of operation and maintenance manuals shall be provided. Warranty minimum two (2) years or 1,500 hours.

FSA26-EQU24.0: Equipment
Item Group Specifications

Generator: 125kW Stationary

The unit in this group must meet or exceed the following FSA Cooperative Purchasing Program specifications.

FSA Base Specification

- Generator Requirements: Standby rated 125 kW, 156.3 kVA, 0.8 power factor, 480V, 3-phase, 60 Hz, 1,800 RPM. Generator shall be directly coupled to the engine and meet IEC G3 performance requirements and UL 2200 certification.
- Engine: Water-cooled diesel engine sized for generator output and compliant with applicable emissions requirements.
- Controls: Microprocessor-based control system providing generator operating, monitoring, protection, and control functions.
- Enclosure/Silencer: Factory-assembled weather-protective, sound-attenuated enclosure including control panel, starting batteries, critical grade silencer, companion flanges, and flexible stainless-steel exhaust connection, sound attenuated enclosures noise level not to exceed 75 dBA measured at 23 ft.
- Fuel Tank: Integral double-wall sub-base fuel tank meeting UL 142 and applicable FDEP requirements with minimum 24-hour runtime at full rated load, 110% secondary containment, mechanical fuel gauge, lockable fuel fill, low fuel level alarm, and fuel tank rupture alarm.
- Battery Charger: Integral automatic battery charger with boost and float charging modes.
- Startup & Commissioning: Vendor shall coordinate startup and commissioning activities following installation by others. A factory-trained technician shall perform one (1) day of startup and operational testing and provide operator training.
- Warranty & Documentation: Generator shall include all standard manufacturer equipment and accessories. Initial fill of oil and coolant shall be included (fuel provided by others). One complete set of operation and maintenance manuals shall be provided. Warranty minimum two (2) years or 1,500 hours.

FSA26-EQU24.0: Equipment
Item Group Specifications

Generator: 150kW Mobile

The unit in this group must meet or exceed the following FSA Cooperative Purchasing Program specifications.

FSA Base Specification

- Generator Requirements: Standby rated 150 kWe, 187 kVA, 0.8 power factor; prime rated 135 kWe, 168 kVA, 0.8 power factor. Generator shall be directly coupled to the engine and equipped with a shunt-trip main breaker, jacket water heater, and IEC G3 compliance.
- Engine: Emission-compliant diesel engine sized for generator output.
- Controls: Microprocessor-based control system providing operating, monitoring, protection, and automatic start/stop functions.
- Distribution & Receptacles: Voltage selection for 120/240V single-phase, 120/240V three-phase, 120/208V three-phase, and 277/480V three-phase. Unit shall include load connection points, 50A twist-lock receptacle, 30A RV receptacle, duplex receptacles, GFCI receptacles, and remote start connections.
- Enclosure: Factory weather-protective sound-attenuated enclosure with lockable doors, critical-grade silencer, flexible exhaust connection, and service drain connections, sound attenuated enclosures noise not to exceed 75 dBA measured at 23 ft.
- Trailer/Fuel Tank: DOT-compliant trailer sized for generator package. Fuel system shall provide minimum eight (8) hour runtime at 75% load with fuel gauge, locking fuel fill, low fuel alarm, and required vents and connections.
- Battery Charger: Integral automatic battery charger with boost and float charging modes.
- Startup & Commissioning: Factory-trained technician shall perform one (1) day of startup, testing, and operator training.
- Warranty & Documentation: All equipment shall be new and current production. Operation and maintenance manuals included. Warranty minimum two (2) years or 1,500 hours.

FSA26-EQU24.0: Equipment
Item Group Specifications

Generator: 500kW Mobile

The unit in this group must meet or exceed the following FSA Cooperative Purchasing Program specifications.

FSA Base Specification

- Generator Requirements: Standby rated 500 kWe, 625 kVA, 0.8 power factor; prime rated 450 kWe, 563 kVA, 0.8 power factor. Generator shall be directly coupled to the engine and equipped with shunt-trip breaker, jacket water heater with isolation valves, and IEC G3 compliance.
- Engine: Water-cooled emission-compliant diesel engine sized for generator output.
- Controls: Microprocessor-based control system providing operating, monitoring, protection, and automatic start/stop functions.
- Distribution & Receptacles: Voltage selection for 120/208V and 277/480V three-phase operation. Load connection points rated for 2,000 amps with remote start provisions and dedicated charger/heater receptacles.
- Enclosure: Factory weather-protective sound-attenuated enclosure with lockable doors, critical-grade silencer or equivalent attenuation, flexible exhaust connection, and service drain connections, sound attenuated enclosures noise levels not to exceed 80 dBA measured at 23 ft.
- Trailer/Fuel Tank: DOT-compliant trailer with VIN, leveling jacks, hydraulic brakes, and adjustable/removable pintle hitch. Fuel system shall provide minimum eight (8) hour runtime at 75% load.
- Battery Charger: Integral automatic battery charger with boost and float charging modes.
- Startup & Commissioning: Factory-trained technician shall perform one (1) day of startup, testing, and operator training.
- Warranty & Documentation: All equipment shall be new and current production. Operation and maintenance manuals included. Warranty minimum two (2) years or 1,000 hours.

FSA26-EQU24.0: Equipment
Item Group Specifications

Generator: 500kW Stationary

The unit in this group must meet or exceed the following FSA Cooperative Purchasing Program specifications.

FSA Base Specification

- Generator Requirements: Standby rated 500 kW, 625 kVA, 0.8 power factor. Available in 120/240V, 120/208V, or 277/480V three-phase configurations. Generator shall meet IEC G3 performance requirements and UL 2200 certification.
- Engine: Water-cooled, 1,800 RPM diesel engine compliant with applicable stationary standby emissions requirements.
- Controls: Microprocessor-based control system providing generator operating, monitoring, protection, and control functions. Control panel shall comply with NFPA 110.
- Enclosure/Silencer: Factory-assembled weather-protective, sound-attenuated enclosure constructed of corrosion-resistant materials with critical-grade silencer, flexible exhaust connection, and service drain connections, sound attenuated enclosures noise level not to exceed 80 dBA measured at 23 ft.
- Fuel Tank: Integral double-wall sub-base fuel tank meeting UL 142 and applicable FDEP requirements with minimum 24-hour runtime at 75% load, 110% secondary containment, mechanical fuel gauge, lockable fuel fill, low fuel level alarm, and rupture alarm.
- Battery Charger: Integral automatic battery charger with boost and float charging modes.
- Startup & Commissioning: Vendor shall coordinate startup and commissioning activities following installation by others. A factory-trained technician shall perform one (1) day of startup and operational testing and provide operator training.
- Warranty & Documentation: Generator shall include all standard manufacturer equipment and accessories. Initial fill of oil and coolant shall be included. One complete set of operation and maintenance manuals shall be provided. Warranty minimum two (2) years or 1,500 hours.

FSA26-EQU24.0: Equipment
Item Group Specifications

Horizontal Directional Drill

The unit in this group must meet or exceed the following FSA Cooperative Purchasing Program specifications.

FSA Base Specification

- Weight: 20,700 lbs.
- Engine: 125 hp, liquid cooled diesel
- Operational: Thrust/pullback 28,000 lbs., carriage speed 240 fpm, spindle torque 4,200 lbs., rotational speed 270 rpm, bore diameter 4”, ground speed 3 mph, drill rack angle 14-21 degrees
- Controls: Touchscreen guidance display
- Drill System: Hydraulic vise, stakedown system, strike alert, remote lockout, work lights
- Drill Pipe: Rod diameter- 2.38”, length- 10’, weight- 73 lbs., bend radius- 108’
- Color: Manufacturers’ standard color
- Fluid System: Mixing type

FSA26-EQU24.0: Equipment
Item Group Specifications

Leaf Collector: Trailer Mounted

The unit in this group must meet or exceed the following FSA Cooperative Purchasing Program specifications.

FSA Base Specification

- Motor: 74 hp diesel engine, liquid cooled
- Fan: 27” fan, direct drive
- Pickup Hose: 16” diameter, 3 function hydraulically controlled arm, safety interlock
- Collection Body: 30 cubic yd. capacity w/ tailgate, scissor hoist, hydraulic dump
- Ride On Operator Station: All machine controls to be located at operator station, seat belt, emergency shutdown
- Dust Control: Dust control system, water pump, 3 nozzles, 90-gallon water tank
- Trailer: Frame, axles, tires, electric brakes will be sized for GVW of unit, DOT compliant, pintle hitch, yellow flashers, tongue jack
- Color: Manufacturers’ standard color

FSA26-EQU24.0: Equipment
Item Group Specifications

Lift: Articulated Boom Lift - Self Propelled Tracked

The unit in this group must meet or exceed the following FSA Cooperative Purchasing Program specifications.

FSA Base Specification

- Performance Standards: 55’ working height, 23’ horizontal reach, lift capacity 440 lbs.
- Boom: Telescoping upper boom, articulating jib, rotating basket, 360-degree boom rotation
- Outriggers: 4 corner hydraulic outriggers, w/ground pressure sensors
- Power: Gas or diesel engine, and 120v electric power for indoor operation
- Tracks: Rubber tracks
- Platform: Aluminum basket, hydraulic leveling system, w/load cell, controls

FSA26-EQU24.0: Equipment
Item Group Specifications

Lift: Scissor Lift - Self Propelled

The unit in this group must meet or exceed the following FSA Cooperative Purchasing Program specifications.

FSA Base Specification

- Performance Standards: 25’ working height (raised), 18’ platform height (raised), lift capacity 500 lbs.
- Power: 24-volt, 4–6-volt batteries, on board charging system, dual front wheel drive
- Brakes: 2- or 4-wheel brakes
- Platform: 64" x 29" platform, 36" extension deck fixed rails, AC power to platform, lanyard attachment points
- Safety: Manual platform lowering, emergency stop on platform and ground control, descent alarm, hour meter, horn, pothole guards, on board diagnostic system, tilt lever sensor with alarm, scissor maintenance prop

FSA26-EQU24.0: Equipment
Item Group Specifications

Light Tower: Hybrid Light Tower

The unit in this group must meet or exceed the following FSA Cooperative Purchasing Program specifications.

FSA Base Specification

- Performance Standards: deployed height- 30', weight- 1,850 lbs.
- Generator: Diesel engine, water cooled, emission compliant, 2 20A/120v receptacles, auto mode- automatic start for low battery hybrid systems automatically switches between solar battery, generator, or standard household current
- Trailer: 2 extendable outriggers, top mounted fork pockets and single lifting eye, powder coated DOT compliant trailer with lights
- Mast: 30' extendable mast in 3 stages, wind stability to 40 mph, rotates 90 degrees
- Lights: 4 quick connect 320 watt each, LED lights, dimmer control, instant on/off, 365-day programmable timer for lights, on/off, lens pattern spread of 150 degrees, meets DOT anti-glare regulations
- Solar Panels: 5 100-watt panels, operating temperature- 40°C to 46°C
- Batteries: 4 deep cycle batteries, optional lithium cells, 12-volt, 220 amp hours

FSA26-EQU24.0: Equipment
Item Group Specifications

Light Tower: Light Tower - Trailer Mounted

The unit in this group must meet or exceed the following FSA Cooperative Purchasing Program specifications.

FSA Base Specification

- Performance Standards: Mast deployed height- 23', weight- 1,610 lbs.
- Engine: Diesel engine, engine protection shutdown system
- Generator: Wattage output 7,000-watt max, 6,000-watt continuous, brushless type, 120/240v at 60 Hz, 6% regulated, amps at 120/240v 50/25, insulation class
- Fuel Tank: Sized for run time of 64 hrs.
- Trailer: 4 outrigger jacks, ball type hitch, DOT compliant
- Control Panel: Individual breakers for lights, hour meter, cabinet lights, external receptacles- One 30-amp 120/240-volt, twist lock, 1 GFC1, 15-amp 120 volt
- Mast: 30' extendable mast, 4 LED light heads, 320,000 lumens, 360-degree mast rotation, fold down for transport, winch for mast extension

FSA26-EQU24.0: Equipment
Item Group Specifications

Loader: Loader Backhoe - 4x4

The unit in this group must meet or exceed the following FSA Cooperative Purchasing Program specifications.

FSA Base Specification

- Weight: 15,221 lbs.
- Engine: 87 hp diesel engine
- Transmission: 4-speed power shift or power shuttle transmission
- Drivetrain: 4-wheel drive, with differential lock
- Operator Environment: ROPS enclosed cab, A/C and heat, work and driving lights, Stop and turn signals with flashing hazard lamps gauges or an electronic monitoring device standard horn and audible back-up alarm
- Brakes: enclosed and sealed, fully self-adjusting
- Tires: Lug type tires
- Loader (Single Tilt Cylinder): Loader shall be equipped with a return to dig mechanism, loader bucket 1.3 yd. with replaceable bolt on edge, furnished with machine
- Backhoe: Fixed length dipper stick reach approximately 17’ from swing center at ground level 24” general purpose bucket with replaceable teeth, furnished with machine

FSA26-EQU24.0: Equipment
Item Group Specifications

Loader: Mini Skid Steer - 1,000 lbs. Operating Capacity - Tracked Type, Stand Up Operator

The unit in this group must meet or exceed the following FSA Cooperative Purchasing Program specifications.

FSA Base Specification

- Engine: Minimum 24 hp diesel
- Transmission: Hydrostatic drive
- Operator Environment: Stand up type, engine monitoring system or gaugesBrakes: Hydrostatic main braking
- Tracks: Rubber tracks
- Loader: Front auxiliary hydraulics, 36” wide general purpose construction bucket (supplied with machine)
- Operating Capacity 1,000 lbs.

FSA26-EQU24.0: Equipment
Item Group Specifications

Loader: Skid Steer - 1,850 lbs. Operating Capacity - Wheeled Type

The unit in this group must meet or exceed the following FSA Cooperative Purchasing Program specifications.

FSA Base Specification

- Engine: 56 hp diesel
- Transmission: Hydrostatic drive
- Operator Environment: ROPS canopy shall be integral, front and rear work lights, hazard lights, engine monitoring system or gauges, with audible alarm, horn and backup alarm
- Brakes: Parking brake, hydrostatic main braking
- Tires: Lug type tires
- Loader: Front auxiliary hydraulics, foot or hand controls for bucket, 62” wide construction bucket, supplied with machine
- Operating Capacity: 1,850 lbs.

FSA26-EQU24.0: Equipment
Item Group Specifications

Loader: Skid Steer - 2,800 lbs. Operating Capacity - Wheeled Type

The unit in this group must meet or exceed the following FSA Cooperative Purchasing Program specifications.

FSA Base Specification

- Engine: 83 hp diesel
- Transmission: Hydrostatic drive
- Operator Environment: ROPS canopy shall be integral, front and rear work lights, hazard lights, engine monitoring system or gauges, with audible alarm, horn and backup alarm,
- Brakes: Parking brake, hydrostatic braking
- Tires: Lug type tires
- Loader: Front auxiliary hydraulics, foot or hand controls for bucket, 84” wide construction bucket supplied with machine
- Operating Capacity: 2,800 lbs.

FSA26-EQU24.0: Equipment
Item Group Specifications

Loader: Skid Steer - 3,100 lbs. Operating Capacity - Tracked Type

The unit in this group must meet or exceed the following FSA Cooperative Purchasing Program specifications.

FSA Base Specification

- Engine: 74 hp diesel,
- Transmission: Hydrostatic drive
- Operator Environment: ROPS canopy shall be integral, front and rear work lights, hazard lights, engine monitoring system or gauges, with audible alarm, horn and backup alarm
- Brakes: Parking brake, hydrostatic braking
- Tracks: Rubber tracks
- Bucket: 75” construction bucket, supplied with machine
- Operating Capacity: 3,100 lbs.

FSA26-EQU24.0: Equipment
Item Group Specifications

Loader: Wheel Loader - 1.5 cubic yd.

The unit in this group must meet or exceed the following FSA Cooperative Purchasing Program specifications.

FSA Base Specification

- Operating Weight: 14,100 lbs.
- Engine: minimum 74 hp, diesel engine
- Operator Station: Enclosed ROP cab with air conditioning and heat, suspension seat, work lights, driving lights, tinted glass, sound suppressed, mirrors
- Transmission: Power shift transmission or hydrostatic drive, minimum of 4 forward and 3 reverse speeds
- Drivetrain: AWD
- Tires: 15.5-25 radial, lug type tires
- Loader: 1.5 cubic yd. general purpose bucket with bolt on cutting edge supplied with machine, bucket position indicator, automatic return to dig

FSA26-EQU24.0: Equipment
Item Group Specifications

Loader: Wheel Loader - 3.0 cubic yd.

The unit in this group must meet or exceed the following FSA Cooperative Purchasing Program specifications.

FSA Base Specification

- Operating Weight: 27,200 lbs.
- Engine: Diesel engine, 140 hp
- Operators Station: ROPS enclosed cab with air conditioning and heat, suspension seat, work lights, driving lights, tinted glass, sound suppressed, mirrors
- Transmission: Power shift transmission or hydrostatic drive, minimum of 4 forward and 3 reverse speeds
- Drivetrain: AWD
- Tires: 20.5-25 radial tires, lug type
- Loader: 3.0 cubic yd. general purpose bucket with bolt on cutting edge furnished with machine, bucket position indicator, automatic return to dig

FSA26-EQU24.0: Equipment
Item Group Specifications

Loader: Wheel Loader - 5.75 cubic yd.

The unit in this group must meet or exceed the following FSA Cooperative Purchasing Program specifications.

FSA Base Specification

- Operating Weight: 53,674 lbs.
- Engine: Diesel engine, 280 hp
- Operators Station: ROPS enclosed cab with air conditioning and heat, suspension seat, work lights, driving lights, tinted glass, sound suppressed, mirrors
- Transmission: Power shift transmission or hydrostatic drive, 4 forward and 3 reverse speeds
- Drivetrain: AWD
- Tires: 26.5-R25 radial tires, lug type
- Loader: 5.75 cubic yd. general purpose bucket with bolt on cutting edge furnished with machine, bucket position indicator, automatic return to dig

FSA26-EQU24.0: Equipment
Item Group Specifications

Low Speed Vehicle: Electric Type

The unit in this group must meet or exceed the following FSA Cooperative Purchasing Program specifications.

FSA Base Specification

- Classification: These vehicles are primarily used to transport people and limited cargo in the State of Florida on typical county and city highways and roads that are posted for 35 mph or less and shall be designed to operate under typical environmental conditions, vehicles must conform to Federal Motor Vehicle Safety Standards, State of Florida Vehicle Safety Laws, regulations, specifications, standards, and requirements in effect as of the date of manufacture
- Engine: Electric motor, 48-volt lead acid batteries (8 batteries x 6v), 110v on board charger, 50 miles per charge, max forward speed 25mph, digital speedometer and dashboard
- Body: Plastic body and fiberglass roof, windshield with wiper
- Comfort Items: 4-person seating with flip rear seat for cargo
- Chassis/Steering/Suspension: steel frame type chassis, 500lbs. GVW capacity
- Tires and Wheels: 205/50-10 tires, 10" aluminum rims
- Brakes: 4 wheel hydraulic, hand brake
- Safety Items: 100% Electric with zero emissions, headlights, brake indicators, voltmeter, turn signals, side and rear-view mirrors, reverse alarm, non-slip flooring, neutral switch when vehicle is standing still, horn

FSA26-EQU24.0: Equipment
Item Group Specifications

Motor Grader: Large

The unit in this group must meet or exceed the following FSA Cooperative Purchasing Program specifications.

FSA Base Specification

- Weight: 33,900 lbs.
- Engine: Diesel 140 hp
- Transmission: Power shift with direct drive, 8 forward and 4 reverse speeds
- Brakes: Wet multiple disc
- Steering & Articulation: Front steer plus articulation, minimum articulation 20 degrees
- Blade: 12’ long, with bolt on cutting edge, scarifier with replaceable teeth
- Operator Environment: Low profile enclosed cab, sound suppressed, filtered, tinted glass, A/C and heat, adjustable suspension seat, gauges or engine monitoring system, work lights
- Tires: 13-24 10 PR, radial lug type tires

FSA26-EQU24.0: Equipment
Item Group Specifications

Motor Grader: Small

The unit in this group must meet or exceed the following FSA Cooperative Purchasing Program specifications.

FSA Base Specification

- Weight: 15,200 lbs.
- Engine: Diesel, 110 hp
- Transmission: Hydrostatic drive or power shift
- Brakes: Wet multiple disc
- Steering/Articulation: 18-degree articulation,
- Blade: 10’ blade, replaceable bolt on cutting edge, scarifier with replaceable teeth
- Operator Environment: Low profile enclosed cab, sound suppressed, filtered, tinted glass, A/C and heat, adjustable suspension seat, gauges or engine monitoring system, work lights
- Tires: 15x19.5, lug type tires

FSA26-EQU24.0: Equipment
Item Group Specifications

Mower: 15ft. Flex Wing Rotary Mower

The unit in this group must meet or exceed the following FSA Cooperative Purchasing Program specifications.

FSA Base Specification

- Deck: Mower shall be rotary, flex wing style, 10-gauge steel, replaceable full-length skid shoes
- Blade Carrier & Blades: 7-gauge steel, 1" thick cross bar weldment, "Stump Jumper" pan design, 2 free swinging updraft cutting blades, blade spindles shall be 1 ¼" diameter
- Wheels/Tires: 6 replaceable puncture resistant foam filled airplane tailwheels
- Power Distribution: Main driveline shall be CAT 5, slip clutch protection, a power divider shall have a rating of 190 hp, center and wing gearboxes shall have a rating of 190 hp
- General Features: Mower shall attach to the rear of the tractor using a self-level-lift hitch, front and rear chain deflectors, tongue shall have a jack stand

FSA26-EQU24.0: Equipment
Item Group Specifications

Mower: Remote Controlled Brush Mower

The unit in this group must meet or exceed the following FSA Cooperative Purchasing Program specifications.

FSA Base Specification

- Approximate Dimensions: Length- 57”, width- 59”, height- 33”, weight- 990 lbs.
- Engine: 24 hp gas, pressurized oiling system, electric start
- Track Drive System: Two 48v electric motors, infinitely variable gear reduction transmissions, multi lug type tracks, neoprene rollers
- Mower Deck: Twin spindle deck, 10-gauge mower deck, blade bar 2x22” with 4 free swinging blades, electric clutch assembly w/ integral safety brake, mowing height range- 2 to 7”
- Remote Control: Remote control to control mower functions- travel speed, cutting height, hours, radio signal strength, state of charge of remote-control battery, and mower on/off, remote control working range 328’, max range 984’, auto stop feature for loss of radio signal, rechargeable lithium ion batteries
- Safety: One touch emergency shut off switch

FSA26-EQU24.0: Equipment
Item Group Specifications

Mower: Electric Zero Turn Radius Mower

The unit in this group must meet or exceed the following FSA Cooperative Purchasing Program specifications.

FSA Base Specification

- Electric Power: 36 hp gas equivalent, electric power
- Battery: Battery system with charger to allow 7 hours of mowing time
- Deck: 60” deck, 1.5-5.5” height adjustment, side discharge
- Wheels: 24x12 drive wheels, solid deck wheels
- Operator Station: Suspension seat, ROPS bar
- Mowing Speed: 11 mph (approximate)

FSA26-EQU24.0: Equipment
Item Group Specifications

Mower: Zero Turn Radius Mower

The unit in this group must meet or exceed the following FSA Cooperative Purchasing Program specifications.

FSA Base Specification

- Engine: 25 hp gas engine, positive feed oil system
- Drive Train/Axles: Spin on hydraulic filters
- Deck: 60” heavy duty mower deck, manual deck lift, 1” to 5” cutting height, deck engagement electric clutch
- Wheels: Front wheels- 13x6-6, rear wheels- 24x11.5-12 turf
- Comfort & Convenience: High back full suspension seat, ROPS bar

FSA26-EQU24.0: Equipment
Item Group Specifications

Pallet Jack: Electric 4,500 lbs. Capacity

The unit in this group must meet or exceed the following FSA Cooperative Purchasing Program specifications.

FSA Base Specification

- Weight: 900 lbs.
- Wheelbase: 51”
- Turning Radius: 58”
- Lift Capacity: 4,500 lbs.
- Travel Speed: 3.7 mph
- Gradeability: 8% (loaded)
- Drive: 1.3 kW drive AC motor, polyurethane drive wheels, electric brake, lift motor 1.2 kW
- Battery System: 150 Ah battery, integrated on board charger
- Controls: Tiller type control, multi-function control on tiller handle

FSA26-EQU24.0: Equipment
Item Group Specifications

Pipe Inspection: Battery Operated Pipe Crawler Inspection System

The unit in this group must meet or exceed the following FSA Cooperative Purchasing Program specifications.

Note: Due to the complexity of this type of equipment, it is suggested that the purchaser contact the vendor to ensure the item ordered is a complete, ready-to-work unit and is compatible with the end user's software/hardware requirements and performance expectations.

FSA Base Specification

- Width: 6"
- Height: 5.5"
- Length: 28"
- Weight: 65 lbs.
- Depth Rating: 160'
- Pipe Range: 8" to 12"
- Speed: 12m/min
- Pull Force: 130 lbs.
- Sensors: Incline, roll, leak, pan/tilt, distance
- Tether Reel: Motorized reel, 1,000' tether capacity, 1,600 lbs. break strength
- Battery Power: 19.2 VDC, 5-hour battery life, capable of optional hybrid power
- Lighting: 900 LM
- Controller: Weatherproof, splashproof, joystick type controls, battery powered
- Camera: 360-degree pan, 1080p/2mp resolution, tilt 280 degrees, zoom 10x optical 120x digital, focus auto or manual, exposure auto or manual

FSA26-EQU24.0: Equipment
Item Group Specifications

Pipe Inspection: External Power Pipe Crawler Inspection System

The unit in this group must meet or exceed the following FSA Cooperative Purchasing Program specifications.

Note: Due to the complexity of this type of equipment, it is suggested that the purchaser contact the vendor to ensure the item ordered is a complete, ready-to-work unit and is compatible with the end user's software/hardware requirements and performance expectations. This unit will require an external power supply.

FSA Base Specification

- Width: 6" approximate
- Height: 5.5" approximate
- Length: 28" approximate
- Weight: 65 lbs. approximate
- Pipe Range: 6" to 48"
- Speed: manufacturers' standard speed
- Pull Force: 130 lbs. approximate
- Sensors: Incline, roll, leak, pan/tilt, distance
- Tether Reel: Motorized reel, level wind 1,000' tether capacity, 1,200 lbs. pull strength
- External Power: Power to unit from truck, or generator (not included)
- Lighting: 900 LM
- Controller: Weatherproof, splashproof, joystick type controls
- Camera: 360-degree camera rotation, 1080p x 1920p resolution, tilt, zoom 120x digital, focus auto or manual, exposure auto or manual, lens wiper (if available)

FSA26-EQU24.0: Equipment
Item Group Specifications

Portable Signal: Portable Signal - Trailer Mounted

The unit in this group must meet or exceed the following FSA Cooperative Purchasing Program specifications.

FSA Base Specification

- Performance Standards: Mast deployed height- 15', weight- 2700 lbs.
- Power: AGM Batteries, adjustable solar panel, on board 120v charger
- Mast: 17' hydraulically extendable mast, 9' manual arm extension
- RYG Light Heads: 2 each LED 12" light heads [red, yellow, green], 180-degree rotation, 3 section overhead, 3 section side of mast, ITE compliant
- Controls: Manufacturer's standard controls, any software needed for operation to be included
- Trailer: 4 outrigger jacks, ball type hitch, DOT compliant, vandalism protection (if available)

FSA26-EQU24.0: Equipment
Item Group Specifications

Pump: Mobile Pump

The unit in this group must meet or exceed the following FSA Cooperative Purchasing Program specifications.

FSA Base Specification

- Design Requirements: Discharge size- 6", suction size- 6", capable of 1,750 GPM, capable of 160' Total Dynamic Head (TDH), Duty Point, - 1,000 GPM at 120' Total Dynamic Head (TDH), solids handling capability size- 3"
- Engine: Diesel engine, appropriate to pump size at continuous duty, emission compliant engine, industrial grade exhaust muffler and rain cap, oil and coolant drain lines with ball valves, low water level shutdown switch, 12 VDC system with battery rack and cables, 50-gallon fuel tank with low fuel level alarm and shutdown
- Pump: Check valve, self-priming system
- Controls: Solid state, microprocessor-based pump controls, controls shall provide all operating, monitoring and control functions for the pump set, controller will also provide 2 fully programmable contacts for input and output signals accordingly, controller will provide remote start stop control with adjustable ramp (speed) time control, UL 508 R and CSA C22.2 No. 14 approved
- Trailer: The manufacturer shall mount the diesel engine and pump unit with the above 50 gallon subbase tank on a street legal DOT approved trailer, this trailer will be able to be rated for a safe travel at speeds of 60 mph and not be limited to the following specifications- trailer design shall be such that the county/city may easily remove the entire engine, fuel tank and pump from the trailer, 12 VDC electric system, lunette or military type towing ring with safety chains, single point lifting bar, license plate bracket, sand shoe type support stands front and rear, torque spring axles to meet load of trailer, the trailer must have a VIN and a certificate of origin
- Startup and Commissioning: Vendor must coordinate all startup and testing activities with the engineer/owner, after field delivery of the pump and trailer, an authorized factory representative shall perform the initial startup and field testing of the pump and trailer, if conditions permit, a site will be determined where connection will be made by the county/city to test the pump package, if a site cannot be prepared a standard

operational test will be performed, at the same time the startup test is performed, the factory representative will provide all necessary operation, field maintenance and minor repair training as necessary, this will also include safety procedures and hazard assessment

FSA26-EQU24.0: Equipment
Item Group Specifications

Roadway Advisory Board: Message Board/Automatic License Plate Reader

The unit in this group must meet or exceed the following FSA Cooperative Purchasing Program specifications.

Note: Due to the complexity of this type of equipment, purchaser should research and verify the unit bid will meet their desired performance expectations and is compatible with their hardware/software requirements. It is recommended the vendor be contacted to assist with determining these factors prior to purchase.

Unit bid will be ready to work with batteries, carrying cases, technical manuals, etc.

FSA Base Specification

- Power System: AGM type batteries, integral 120v charger, tilting solar panel
- Message Board: 96”x 55” message display board, touchscreen controller
- License Plate Reader: 2 LPR cameras, tablet processer, software, PC processor, Tech Alert
- Connectivity: Cellular connectivity
- Trailer: DOT approved trailer, all weather protection, maximum vandal protection

FSA26-EQU24.0: Equipment
Item Group Specifications

Roadway Advisory Board: Mobile Message Board

The unit in this group must meet or exceed the following FSA Cooperative Purchasing Program specifications.

FSA Base Specification

- Display Panel: Minimum panel size 71”x48”
- Power: Solar and battery with battery charger that meets manufacturer requirements
- Trailer: 2” minimum ball coupler, meets manufacturer and highway safety requirements, vandalism protected, DOT compliant

FSA26-EQU24.0: Equipment
Item Group Specifications

Roadway Advisory Board: Mobile Speed Board

The unit in this group must meet or exceed the following FSA Cooperative Purchasing Program specifications.

FSA Base Specification

- Display Panel: Amber or red LED, 12” speed limit sign
- Radar Speed Unit: Miles per hour, directional radar
- Data Collection: Data and analysis software included
- Power: Solar and battery with battery charger that meets manufacturer requirements
- Trailer: 2” ball coupler, meets manufacturer and highway safety requirements, vandal protected, DOT compliant trailer

FSA26-EQU24.0: Equipment
Item Group Specifications

Roadway Advisory Board: Mobile Speed Board/Automatic License Plate Reader

The unit in this group must meet or exceed the following FSA Cooperative Purchasing Program specifications.

Note: Due to the complexity of this type of equipment, purchasers should research and verify the unit bid will meet their desired performance expectations and is compatible with their hardware/software requirements. It is recommended that the vendor be contacted to assist with determining these factors prior to purchase.

Unit bid will be ready to work with batteries, carrying cases, technical manuals, etc.

FSA Base Specification

- Power System: 3 AGM type batteries, integral 120v charger, 5-to-7-day runtime, solar panel
- License Plate Reader: 2 cameras, tablet processer, software, automated hotlist alerting, plate search and vehicle filtering
- Digital Speed Display: 12” digital display, configurable, flashing excessive speed message capability
- Radar: Radar included
- Posted Speed Limit Sign: Metal sign included
- Connectivity: Cellular connectivity
- Trailer: DOT approved trailer, all weather protection, maximum vandal protection

FSA26-EQU24.0: Equipment
Item Group Specifications

Roadway Advisory Board: Mobile Traffic Advisory/Directional Signal Board

The unit in this group must meet or exceed the following FSA Cooperative Purchasing Program specifications.

FSA Base Specification

- Display: 15 lamps minimum, 48”x96” panel size
- Power: Solar and battery with battery charger that meets manufacturer requirements
- Trailer: 2” ball coupler, meets manufacturer and highway safety requirements, vandal protected, DOT compliant trailer

FSA26-EQU24.0: Equipment
Item Group Specifications

Roller: Compact 2,900 lbs. - Double Drum Roller - 38 in. Width

The unit in this group must meet or exceed the following FSA Cooperative Purchasing Program specifications.

FSA Base Specification

- Weight: 2,900 lbs.
- Engine: Diesel engine 20 hp, water cooled
- Travel System: Hydrostatic drive
- Steering: Front steering or center articulated acceptable
- Drum/Vibratory System: Front split drums 30” width total, 20” diameter , rear drum width 38”, 24” diameter, or same size front and rear drum width of 38” are acceptable, 3,000 lbs. vibratory compaction weight, scrapers/cleaners on all drums
- Travel System: Hydrostatic drive, and braking
- Water System: Shall be equipped with a pressurized water system for both drums, 38 gal plastic tank
- Operator station: Open type, w/ROPS, gauges or warning indicators, backup alarm, work lights, safety beacon

FSA26-EQU24.0: Equipment
Item Group Specifications

Roller: Compact, Pneumatic Asphalt Roller

The unit in this group must meet or exceed the following FSA Cooperative Purchasing Program specifications.

FSA Base Specification

- Weight: 1.5 to 3 tons fully ballasted
- Engine: Diesel engine 24 hp, water cooled
- Travel System: Hydrostatic drive
- Steering: Front steering, hydraulic
- Wheels: 7-wheel design, 3 front, 4 rear, 8.5x15 6 ply tire size, cleaners on all wheels
- Water System: Pressurized water system, 52-gal water tank
- Ballast Tank: 180 gal or wheel weights for ballast
- Operator station: Open type canopy ROPS, gauges or warning indicators, backup alarm, work lights, safety beacon

FSA26-EQU24.0: Equipment
Item Group Specifications

Roller: Compaction Roller 15,000 lbs. - Single Drum

The unit in this group must meet or exceed the following FSA Cooperative Purchasing Program specifications.

FSA Base Specification

- Weight: 15,000 lbs.
- Engine: Diesel engine, 74 hp
- Travel System: Hydrostatic drive
- Drum/Vibratory System: Compaction shall be 24,000 lbs., drum shall have a compaction width of 66", drum shall be smooth and not be less than 48" in diameter, vibratory system shall be hydraulically driven and have two amplitude settings, drum shall be equipped with an adjustable cleaning device, drum and vibratory pack shall be isolated
- Tires: 14.9x24
- Operator station: Open canopy type ROPS, mounted to the frame with rubber mounts to further isolate the operation and controls from machine vibration during operation, gauges or warning indicators, alert sounding device activated whenever a warning indicator is illuminated, backup alarm, work lights

FSA26-EQU24.0: Equipment
Item Group Specifications

Roller: Large 22,000 lbs. - Double Drum Roller - 70in. Width

The unit in this group must meet or exceed the following FSA Cooperative Purchasing Program specifications.

FSA Base Specification

- Weight: 22,000 lbs.
- Engine: Diesel engine, 100 hp
- Travel System: Hydrostatic drive
- Drum/Vibratory System: Drum compaction width on both drums no less than 70", drum shall be smooth and not less than 48" in diameter, vibratory system shall be hydraulically driven, drum shall be equipped with scrapers both front and rear of both drums, and have two (2) vibratory amplitude settings
- Steering: Center articulated
- Water System: Unit shall be equipped with pressurized water for both drums
- Operator Station: Open canopy type ROPS mounted to the frame with rubber mounts to further isolate the operation and controls from machine vibration during operation, gauges or warning indicators, alert sounding device activated whenever a warning indicator is illuminated, backup alarm, work lights

FSA26-EQU24.0: Equipment
Item Group Specifications

Roller: Small 5,400 lbs. - Double Drum Roller - 47in. Width

The unit in this group must meet or exceed the following FSA Cooperative Purchasing Program specifications.

FSA Base Specification

- Weight: 5,400 lbs.
- Engine: Diesel engine 25 hp
- Travel System: Hydrostatic drive
- Drum/Vibratory System: Drum compactor width on both drums no less than 47", drum shall be smooth and not less than 27.5" in diameter, vibratory system shall be hydraulically driven, drum shall be equipped with scrapers both front and rear of both drums, drum shall be hydraulically driven and have two amplitude settings
- Travel System: The machine shall be hydrostatically driven, steering shall be centered articulated, backup alarm
- Water System: shall be equipped with a pressurized water system for both drums,
- Operator Station: Open type canopy ROPS mounted to the frame with rubber mounts to further isolate the operation and controls from machine vibration during operation, gauges or warning indicators, alert sounding device activated whenever a warning indicator is illuminated, backup alarm, work lights

FSA26-EQU24.0: Equipment
Item Group Specifications

Security Camera: Security Camera Tower - Trailer Mounted

The unit in this group must meet or exceed the following FSA Cooperative Purchasing Program specifications.

FSA Base Specification

- Performance Standards: Mast deployed height- 20', weight- 1,225 lbs.
- Power: Battery power, w/solar panel, on board charger (if available)
- Camera: PTZ type, 360 degree, pan, tilt, zoom, or IR type (if available)
- Trailer: 4 outrigger jacks, ball type hitch, DOT compliant, vandalism protection
- Mast: 20' extendable mast, fold down type or telescoping for transport, winch for mast extension
- Software: Any required software for operation to be provided

FSA26-EQU24.0: Equipment
Item Group Specifications

Sewer Cleaner: Combination Sewer Cleaning/Vacuum Machine Body - 10 cubic yd.

The unit in this group must meet or exceed the following FSA Cooperative Purchasing Program specifications.

Note: Incomplete unit. This is a bid specification for a combination sewer cleaning/vacuum unit to be mounted on an appropriately sized cab & chassis truck. Agencies purchasing this unit will need to provide a cab & chassis truck of appropriate size, GVW, and options necessary to have the selected combination sewer cleaner/vacuuming unit mounted on or have the truck provider assist in ordering the correctly outfitted truck. All items factory installed unless otherwise noted.

FSA Base Specification

- Air/Vacuum System: Positive displacement vacuum pump or centrifugal compressor, 3,500 CFM @ 14.5" of mercury minimum, muffler, vacuum relief valves, centrifugal separator with clean out, PTO or hydrostatic drive
- Debris Tank: 10 cubic yd. capacity, 45-degree hydraulic dump, top hinged, hydraulic door locks, sight glass or indicator, drain valve with hose, check ball system or vacuum breaker
- Boom Assembly: 270-degree boom working area, hydraulic up/down, clean out port, transport cradle, 8" boom hose, pendant control
- Water Pump: 2,500 psi, 80 GPM, pressure relief valve, wash down gun with relief valve
- Water Tank: 1,000-gallon capacity, curb side fill, level indicators
- Hose Reel: 800' of 1" hose capacity, 400' of 1", 2,500 psi hose supplied, power in/out, reel speed control system, position lock system, engine and hose reel controls, level wind
- Drive System: Hydrostatic transfer case, split PTO, or auxiliary engine or transfer case

FSA26-EQU24.0: Equipment
Item Group Specifications

Sewer Cleaner: Easement Machine

The unit in this group must meet or exceed the following FSA Cooperative Purchasing Program specifications.

Note: This unit is not a self-contained machine. It is linked to a Sewer Cleaning truck, to enable working on a sewer system in small areas and easements not accessible by the sewer truck.

FSA Base Specification

- Engine: 20 hp gas or diesel engine, positive feed oil system
- Drive Train: Direct drive rubber track system, extendable tracks, spin on hydraulic filters
- Outriggers: 4 outriggers
- Hose Reel: 180-degree hose reel, 600’ of 1” hose (supplied), level wind, footage counter, variable hose reel speed control, power wind
- Lighting: Work lights

FSA26-EQU24.0: Equipment
Item Group Specifications

Sewer Cleaner: Trailer Mounted Sewer Cleaner

The unit in this group must meet or exceed the following FSA Cooperative Purchasing Program specifications.

FSA Base Specification

- Engine: 60 hp diesel engine
- High Pressure Water Pump: 4,000 psi at 18 GPM, pressure relief valve, triplex type pump, low water shutdown, multi-flow type system (pressure change without changes to engine rpm)
- Controls: Located next to hose reel, ignition, throttle, gauge package (tachometer, hour meter, oil pressure, volts, and low oil/high temp shutdown), water control valve
- Water Tank: 700-gallon capacity, high density polyethylene with baffles, sight gauge 2 ½" overhead tank fill, anti-siphon, air gap type, strainer, tank drain
- Hose Reel: 800' capacity of ½" high pressure sewer hose, hydraulic power in and out
- Hose Reel Drive Hydraulic System: Hydraulic pump 8 GPM, 15-gallon hydraulic reservoir, spin on type hydraulic filter
- Trailer: DOT compliant 12,000 lbs. GVW, tandem axle 2 5/16" hitch, tongue jack, 235/80 r 16" tires, fenders, breakaway switch, lighting as required by Federal and State laws, reflective striping, toolbox with locking system, engine enclosure, LED directional arrow stick, warning beacon (tank mounted)
- Equipment Furnished: 500' of ½" high pressure sewer hose, 100' of ¼" hose and nozzle for small pipe, washdown gun and 25' of hose with quick disconnects, tiger tail hose protector, nozzles to be furnished, 15-degree, 35-degree, chisel point, grenade flushing type, skid assembly, and rotator nozzle

FSA26-EQU24.0: Equipment
Item Group Specifications

Shop Tools & Equipment

Due to the complexity of this type of equipment, there are no base unit specifications. Purchaser should research and verify the model offered will meet their desired performance expectations. It is recommended the vendor be contacted to assist with determining needs, prior to purchase.

Units bid must be ready to work, with all necessary components and user manuals.

FSA26-EQU24.0: Equipment
Item Group Specifications

Simulator System: Equipment Operator Simulator

Due to the complexity of this type of equipment, there are no base unit specifications. Purchasers should research and verify the system bid will meet their desired training expectations. It is recommended the vendor be contacted to assist with determining these needs prior to purchase.

Unit bid must be ready to work, and include all hardware and software required, as well as any necessary training or instruction in the use of the system.

Due to the many different types of equipment training available, vendor will provide a minimum of one type (purchaser will designate type) initially in the software, with other types available to the purchaser.

Simulator must include authentic original machine controls and a supporting, companion curriculum that has been approved and industry recognized.

FSA26-EQU24.0: Equipment
Item Group Specifications

Shredder: Mobile Shredder/Grinder

Note: Due to the many different machine configurations and the types of materials they process, these specifications are written to describe a general size machine and function. Purchasers should contact the vendor to verify the desired equipment is configured and capable of processing their designated type of material stream.

The unit in this group must meet or exceed the following FSA Cooperative Purchasing Program specifications.

FSA Base Specification Range

- Weight Range: 52,000-68,000 lbs.
- Approximate Transport Dimensions: length- 31-38', width- 8', height- 10-13'
- Engine: Diesel, 550-750 hp
- Powertrain: Hydraulic drive or wet clutch acceptable with overload protection
- Rotor: Rotor or grinding drum acceptable, replaceable tips or rotors
- Controls: Gauge package, w/ engine protection shutdown, shredder/grinder control unit to protect from overloading or overheating
- Conveyor: Hydraulic driven conveyor, raised and lowered by hydraulics
- Trailer: Trailer to be constructed and sized for the GVW of the installed unit, and will meet all local, state, and federal laws for use on highway, (may require special permitting for transporting on road)

FSA26-EQU24.0: Equipment
Item Group Specifications

Solid Waste Material Handler: Wheeled Type

The unit in this group must meet or exceed the following FSA Cooperative Purchasing Program specifications.

FSA Base Specification

- Weight: Operating weight 48,000 lbs.
- Engine: Diesel engine, 132 hp
- Travel System: 2 speeds- 0-3.0 mph/0-12.0 mph
- Undercarriage: Two axles with all wheel drive
- Tires: 8- 10:00x20 solid tires
- Operating Station: Enclosed cab to have A/C and heat with pressurized filtration, hydraulic elevating cab, sliding door window and tilt out front window, tinted windows with safety glass, adjustable suspension seat with safety belt and seat heater, catwalk with handrail, fire extinguisher, rear view and right view camera system, halogen work lights on roof cap
- Working Equipment: Purpose built material handling boom and stick, safety check valves on boom and stick cylinders

FSA26-EQU24.0: Equipment
Item Group Specifications

Stump Cutter

The unit in this group must meet or exceed the following FSA Cooperative Purchasing Program specifications.

FSA Base Specification

- Weight: 1,320 lbs.
- Engine: 35 hp gasoline engine, positive feed oil system
- Ground Drive: Hydraulic ground drive, 2-speed travel, hydraulic brake system, hydraulic steering system, hydraulic system spin on filter, 4-gallon hydraulic reservoir
- Cutter Drive: Electric drive clutch, adjustable V belt drive
- Cutter Wheel: 17” diameter, 16 dual cutting-edge teeth, teeth pocket mounted, cutter wheel guard
- Controls: Hour meter, low-oil shutdown, boom swing left and right, boom up and down, travel forward and reverse, steering, operator presence shutdown
- Cutting Dimensions: Above ground- 24”, below ground- 15”

FSA26-EQU24.0: Equipment
Item Group Specifications

Sweeper: 3-Wheel Mechanical or Regenerative Air Sweeper

The unit in this group must meet or exceed the following FSA Cooperative Purchasing Program specifications.

FSA Base Specification

- Engine: Diesel engine, 74 hp
- Transmission: Hydrostatic drive type, capable of 20 mph
- Cab: Sealed type cab with filtered intake, tilt and telescoping steering column, tinted glass, sound suppressed, intermittent windshield wipers with washer, full gauge and warning lights for engine monitoring, climate controlled cab, heater, defroster and air conditioned, if cab is not center mounted, it must have dual controls for operating on either right or left hand side
- Safety Items: Dual west coast mirrors with spot mirrors, headlights, turn, brake and hazard lights, work lights for gutter brooms, cab mounted warning strobe light with protective cage, backup alarm, rearview backup camera
- Brakes/Steering: Hydraulic power assisted service bakes, parking brake, turning radius 15’ maximum
- Debris Hopper: 3.5 yd. capacity, 9’ 6” minimum dump height
- Conveyor: Rubber belt type with flights, hydraulic drive
- Main Broom: 32” diameter minimum, 56” width tube type, hydraulic drive
- Gutter Brooms: Right & left side brooms to have adjustable down pressure located in cab, 36” diameter minimum, segmented type broom, hydraulic drive
- Water Spray System: 220-gallon water tank, run dry type water pump, 15’ hydrant fill hose, water spray jets adjacent to all brooms, water filter
- Pick Up Head: The following requirements are for the regenerative air system type sweeper, all other requirements are the same for either machine, 72” outside dimension, 12” pressure hose, 12” suction hose, spring type suspension
- Blower: The following requirements are for the regenerative air system type sweeper, all other requirements are the same for either machine, direct hydraulic drive, cast aluminum with abrasion resistant coating, blower housing rubber lined

FSA26-EQU24.0: Equipment
Item Group Specifications

Sweeper: Mechanical Broom Street Sweeper

The unit in this group must meet or exceed the following FSA Cooperative Purchasing Program specifications.

FSA Base Specification

- Cab Chassis: Engine- 6-cylinder diesel, 200 hp, transmission- automatic transmission to meet the correct engine size and GVW of vehicle, hydrostatic drive is acceptable, engine equipment, cab- dual operating position type cab to include- steering, controls, etc. for sweeping from either side, rubber floor mats, air ride seating, pressurized with heat and air conditioning, instrumentation for truck- oil pressure, water temperatures, voltmeter gauges, instrumentation for sweeper-tachometer, hour meter, oil pressure, coolant temperature gauges, wheelbase 130" minimum, front steel bumper, safety- Dual West Coast bright finish heated mirrors with LH & RH remote, intermittent windshield wipers, daytime running lights, backup alarm, auto shutdown, axles- front axle- 11,900 lbs. GVW, rear axle- 21,000 lbs. GVW, single speed rear axle, 22.5 x 8.25 steel wheels- disc type, 11R x 22.5 14-ply radial tires, brakes- antilock brakes, air brakes, automatic slack adjusters- front and rear, air dryer- frame mounted
- Mounted Sweeper Body (Standard Equipment): Engine- 4 cylinder diesel, 47 hp, governed at 2,800 rpm, side brooms- right & left side gutter brooms (tilt control in cab), hydraulically raised & lowered , 42" diameter- segment type adjustable down pressure, main broom: length- 58", diameter- 35", hydraulic motor- direct or chain drive and reversible, full floating trailing arms w/shocks, lift control inside cab, sweeper body- overall height- 10', lift capacity- 11,000 lbs. minimum, 4.5 cubic yd. hopper, dump height- 10' minimum. lift design- hydraulic 2-stage scissors, hopper inspection door, work lights- 1 on each gutter broom and one in rear, hydraulic system- hydraulic pump capacity minimum- 24 GPM @ 2,600 rpm, pump- dual tandem gear, reservoir - 21 gallon, spin-on 10 micron hydraulic pump, externally mounted reservoir level indicator, water spray system- water tank construction- polyethylene and removable, water tank capacity- 280 gallon, fill hose 2 ½" x 16' with NST coupler, diaphragm pump type with run dry capability, pump capacity- 3.0 GPM, 9 spray nozzles- 2 min per gutter broom, 3 min for main broom, water filter- 80 micron mesh cleanable, conveyor/elevator system- minimum of 9 flights- replaceable, belt material- rubber reinforced fabric, belt speed-

variable with auxiliary engine rpm, drive- reversible with direct drive, elevator jam warning light & buzzer in cab, conveyer flush- built in

FSA26-EQU24.0: Equipment
Item Group Specifications

Sweeper: Compact Air Sweeper - 2.3 cubic yd.

The unit in this group must meet or exceed the following FSA Cooperative Purchasing Program specifications.

FSA Base Specification

- Weight: 5,900 lbs.
- Engine/Transmission: 78 hp, hydrostatic drive
- Brakes/Tires: Drum type brakes (power assist), front tire size 6.50 R10, Radial, rear tire size 225/75 R10 Radial
- Sweeper Dimensions: Height- 72”, width- 52”, length- 162”
- Hopper: 2.3 cubic yd. capacity
- Gutter Brooms: Equipped with left and right-side gutter brooms, front mounted 33.5” diameter, overall sweeping width 122”
- Water System: 66-gallon recirculation system capacity, 40-gallon clean water system capacity
- Lighting/Safety: Lighting package to enable vehicle to operate on the road, work lights for vehicle operation at night, amber warning beacon, intermittent wipers
- Comfort Items: ROPS type enclosed cab to be air conditioned and heated, suspension type operator seat
- Instrumentation: Full instrumentation to monitor operation of vehicle
- Fan Unit: Centrifugal type fan, wear resistant blades

FSA26-EQU24.0: Equipment
Item Group Specifications

Sweeper: Regenerative Air Street Sweeper

The unit in this group must meet or exceed the following FSA Cooperative Purchasing Program specifications.

FSA Base Specification

- Cab & Chassis: Engine- 6-cylinder diesel, 200 hp, transmission-, 5-speed automatic, engine equipment-, with rust preventative coating, dual operating position type cab to include- steering, controls, etc., for sweeping from either side, rubber floor mats, air ride suspension seats, both sides, pressurized cab with heat and air conditioning, instrumentation for truck- oil pressure, water temperature, voltmeter gauges, instrumentation for sweeper- tachometer, hour meter, oil pressure, coolant temperature gauges, wheelbase- 152” minimum, front steel bumper, safety- west coast mirrors with lower mounted convex mirrors, intermittent windshield wipers, daytime running lights, backup alarm, auto shutdown system for sweeper power plant, axles- front axle- 11,900 lbs. GVW, rear axle- 21,000 lbs. GVW, single- speed rear axle, 22.5 x 8.25 steel wheels, disc type, air brakes, air dryer
- Mounted Sweeper Body: Engine- 4-cylinder turbocharged diesel, 74 hp blower- direct belt drive, blower rating- 20,000 cfm, blower housing, pickup head- 90” OD, hose size- 14” pressure, 12” suction, hydraulically raised and lowered, side brooms- right and left side gutter brooms, hydraulically raised and lowered, 42” diameter- segment type, adjustable downward pressure, sweeper body- 7 yd. volume metric capacity, 50 degree dump angle or raker bar, centrifugal dust separator, hopper dump door to hydraulically open/close, lock and unlock, hopper screen- hinged, quick release, hydraulic system- direct drive hydraulic pump, water spray dust control system- water tank construction- polyethylene, 220 gallon capacity, fill hose- 16’ long, diaphragm pump type with run dry capability, pump capacity- 5 GPM pump pressure- 25 psi, 7 spray nozzles, 4” pickup head, 1” suction tube- 2 on each side of broom, filter- 80 mesh cleanable

FSA26-EQU24.0: Equipment
Item Group Specifications

Sweeper: Self-Propelled Hydrostatic Broom

The unit in this group must meet or exceed the following FSA Cooperative Purchasing Program specifications.

FSA Base Specification

- Weight: 5,500 lbs.
- Engine: Diesel engine 74 hp, air intake pre-cleaner, 27-gallon fuel tank
- Travel System: 2-speed hydrostatic drive, high speed travel, 20 mph, 225/75R15 tire size, joystick direction controls, or foot pedal, front or rear wheel steering
- Cab: ROPS, enclosed cab with air conditioner, heater, front windshield wiper, gauges or warning indicators for fuel level, engine oil, hydraulic oil and coolant, right and left side doors, right and left side mirrors, shall have safety lighting package and night operating lighting package
- Broom: 7’ 6” poly or poly-steel brush, brush shall have quick charge core system, variable brush down-pressure control, brush shall be hydraulically driven
- Water System: 150-gallon

FSA26-EQU24.0: Equipment
Item Group Specifications

Sweeper: Tow Behind Beach Sweeper

Note: This is a towed unit requiring a 60 hp, 4WD tractor, 3 pt hitch, 540 PTO rpm, w/ remote hydraulics, 30" rear wheels, minimum.

The unit in this group must meet or exceed the following FSA Cooperative Purchasing Program specifications.

FSA Base Specification

- Weight: 3,800 lbs.
- Frame: Galvanized frame
- Hydraulic System: PTO pump, flow control, spin on filter, overflow protected
- Conveyor: Bar flight type, 6' wide belt, chain drive
- Tines: Approximately 700 stainless steel tines
- Hopper: 3 yd, galvanized hopper, 4,500 lbs. capacity, 9' dump height
- Tires: Flotation type tires, sized for GVWR of machine
- Moldboard: Front of machine for leveling beach before cleaning
- Cleaning Dimensions: 7' cleaning width, 6" cleaning depth

FSA26-EQU24.0: Equipment
Item Group Specifications

Sweeper: Vacuum Street Sweeper

The unit in this group must meet or exceed the following FSA Cooperative Purchasing Program specifications.

FSA Base Specification

- Cab & Chassis: GVWR 33,000 lbs.
  - Wheelbase: As required by body manufacturer
  - Engine: Diesel, 200 hp
  - Transmission: Manufacturers automatic transmission
  - Brakes: Air brakes, air dryer, ABS system
  - Front Axle: 12,000 lbs. manufacturer standard suspension
  - Rear Axle: 22,000 lbs. rear manufacturer standard suspension
  - Wheels/Tires: 22.5 x 8.25 steel, radial tires
  - Cab: Conventional or Cabover type cab acceptable (verify type)
  - Dual Operating Position: Dual steering, and controls, if available)
  - Cab Convenience: A/C, and heat, Dual remote/heated mirrors w/convex, gauge package, power windows, power door locks, suspension seat both positions,
  - Miscellaneous: Steel front bumper, backup alarm
- Mounted Sweeper Body
- Fan Drive: Diesel, 110 hp (approximately) for twin engine design or hydraulic drive PTO system for single engine design
  - Vacuum Fan: Direct belt drive, or fluid drive, or hydraulically driven
  - Pickup head: Dual pickup heads size 29”, right and left side, hydraulically raised and lowered,
  - Brooms: Tilting, right and left side gutter brooms, center mount broom, all brooms hydraulically raised and lowered, adjustable downward pressure, easy change type
  - Sweep Width: 142” [approximately]
  - Sweeper body: 8.5 yd. capacity, 45-degree dump angle, dust separator system, hopper hydraulic dump
  - Water spray dust control system: Water tank construction polyethylene, 330-gal capacity [approximately], fill hose, water pump with run dry capability, water nozzles located on sweeper to minimize dust

- Sweeper controls: All sweeper controls, gauges, and warnings to be mounted in cab of truck
- Lighting: Work lights, warning lights

FSA26-EQU24.0: Equipment
Item Group Specifications

Sweeper: Walk Behind Floor Sweeper/Scrubber

The unit in this group must meet or exceed the following FSA Cooperative Purchasing Program specifications.

FSA Base Specification

- Power System: Electric 24v, on board charger
- Wet Sweep/Scrub: 26” cleaning path
- Brush Head: 26” disc or cylindrical brush system, brush head w/ squeegee, brush quick change type, single down-pressure, motor driven
- Vacuum System: 19-gal recovery tank, easy drain
- Solution System: 19-gal tank

FSA26-EQU24.0: Equipment
Item Group Specifications

Tactical Vehicle: Skid Steer Mounted (The Rook)

The unit in this group must meet or exceed the following FSA Cooperative Purchasing Program specifications.

FSA Base Specification

- Vehicle Platform: CAT multi-terrain loader, 111 hp diesel engine, 2-speed powertrain, operating weight 16,500 lbs., fuel tank 36-gallon, hydraulic quick coupler, enclosed ROPS cab with air conditioner and heater, dual level suspension undercarriage with self-level, advanced machine information and control system
- Cab Armored Protection: Bullet proof glass, NIJ Level IV armor cab reinforcement fabrication
- Armored Deployment Platform: integrated video system, breaching ram, vehicle extraction tool, grapple claw

FSA26-EQU24.0: Equipment
Item Group Specifications

Tool Carrier: Hydrostatic Drive

The unit in this group must meet or exceed the following FSA Cooperative Purchasing Program specifications.

Note: Incomplete equipment. Unit bid is for the prime mover only, without attachments. Purchasers should select attachments needed from the option list to complete the machine. This will affect the final price.

FSA Base Specification

- Weight: 9,000 lbs., without attachments
- Engine: 90 hp turbo diesel valve, canister style air cleaner with pre-cleaner
- Power Train: Hydrostatic, 4-wheel drive, 3 steering modes- 4-wheel, front wheel and 4-wheel crab
- Travel Speed: Work mode- variable 0-5 mph, travel mode- variable 0-20 mph
- Operators Station: air ride, suspension seat, enclosed ROPS cab with AC, heat, tilt steering column with horn, seat belt with safety switch, turn signals and brake lights, flashing safety lights, work lights
- Available Attachment Options: Available from options list, purchased separately, front lift arms with universal mounting plate, and quick connect hydraulics for 10 possible attachments- broom/sweeper, 90” rotary mower, 88” flail mower, dozier blade, stump grinder, pallet forks, cold planer, big roll sod installer, landscape rake, rotary tiller, right side rotary mower, right side flail mower, right side boom/reach mower, 15’ belly mower

FSA26-EQU24.0: Equipment
Item Group Specifications

Tractor: Agriculture Tractor - 4x2

The unit in this group must meet or exceed the following FSA Cooperative Purchasing Program specifications.

FSA Base Specification

- Engine: Diesel 75 PTO hp
- Transmission: Synchro shuttle type with a minimum of 8 forward and 3 reverse speeds
- Fuel Tank: 23-gallon capacity
- Brakes: Oil cooled hydraulic
- Power Take Off: Speeds rpm- 540/1,000
- Hydraulic System: Hydraulic system with standard remotes,
- 3-Point Hitch: Electronic or mechanical 3-point hitch control, Category II, telescopic stabilizers, SAE lift capacity @ 24” standard lbs.- 3,600, lower draft arm link ends- extendable
- Tires: Rear tires 18.4R-28 R1 radials, front tires 7.5L-15, 6-Ply F2 minimum
- Operator Station: ROPS canopy, with roof suspension seat, work lights, travel lights

FSA26-EQU24.0: Equipment
Item Group Specifications

Tractor: Compact Articulating Tractor - AWD

Note: Incomplete equipment. Unit bid is for the prime mover only, without attachments. Purchasers should select attachments needed from the option list to complete the machine. This will affect the final price.

The unit in this group must meet or exceed the following FSA Cooperative Purchasing Program specifications.

FSA Base Specification

- Weight: 1,860 lbs.
- Engine: 31 hp gas, or 25 hp diesel
- Transmission: Hydrostatic, AWD
- Performance Items: Weight transfer which transfers weight to front axle for added stability
- Safety Items: Automatic PTO shut off when weight is removed from seat, standard seatbelt, standard ROPS system, neutral assist
- Tires and Wheels: Manufacturer's standard tires and wheels (optional turf or bar tires)
- Attachment and Accessories: 30 commercial grade attachments for a variety of applications (sold individually, not factory installed see options list), uses quick hitch system for quick transition between attachments

FSA26-EQU24.0: Equipment
Item Group Specifications

Tractor: Small Agriculture Tractor - 4x4

The unit in this group must meet or exceed the following FSA Cooperative Purchasing Program specifications.

FSA Base Specification

- Engine: Diesel 29 PTO hp
- Transmission: Hydrostatic drive or mechanical type transmission,
- Fuel Tank: 7-gallon capacity
- Brakes: Oil cooled hydraulic wet disc
- Power Take Off: Speeds rpm- 540
- Hydraulic System: Hydraulic system with standard remotes,
- 3-Point Hitch: Category I, SAE lift capacity @ 24” standard lbs.- 1,435
- Tires: Not less than 11.2 x 24 rear, not less than 5-15 6-ply front
- Operator Station: ROPS canopy with roof, suspension seat, work lights, travel lights

FSA26-EQU24.0: Equipment
Item Group Specifications

Tractor: Tractor with Boom Mower - 4x4

The unit in this group must meet or exceed the following FSA Cooperative Purchasing Program specifications.

FSA Base Specification

- Engine: Diesel 95 PTO hp
- Transmission: Synchro shuttle type 16 forward and 16 reverse speeds, 4WD front axle
- Fuel Tank: 38-gallon capacity
- Brakes: Oil cooled hydraulic
- Power Take Off: Speeds rpm- 540/1000
- Hydraulic System: Closed center system with standard remotes, maximum pressure psi-2,900, standard output at remote 17 GPM, total of 29 GPM combined flow
- Point Hitch: Category II, telescopic stabilizers, SAE lift capacity @ 24" standard lbs.-5,000, lower draft arm link ends- extendable
- Tires: Front 13.6R24 R1, rear 18.4R30 6-Ply F2
- Mounted Boom Mower: 23' boom reach, forward and reverse swing break away, integral frame, separate hydraulic circuit for mower head, 5' rotary cutter head, disc or bar type blade holder
- Operator Station: Enclosed cab, ROPS/FOPS, suspension seat, lockable doors, A/C and heated, tinted glass, work lights, travel lights

FSA26-EQU24.0: Equipment
Item Group Specifications

Trailer: Container Chassis Trailer - 73,900 lbs. GVWR

Note: This is a chassis trailer only. It is designed for transporting a 40’ ISO container, not included.

The unit in this group must meet or exceed the following FSA Cooperative Purchasing Program specifications.

FSA Base Specification

- GVWR: 73,900 lbs.
- Length: 40’8”
- Width: 96”
- Weight: 6,500 lbs.
- Kingpin Setting: 30” from rear face of front bolster
- Coupler Height: 48”
- Container Locks: Front pin locks and rear twist locks, rear TOCA 908-123.00.90 or buffers equivalent
- Axles: 2 sized to meet GVWR of unit, oil lubricated hubs
- Brakes: Air brakes, w/ ABS, automatic slack adjusters
- Suspension: Spring type, sized for GVWR of unit
- Tires: 11R 22.5 Radial tires
- Lighting: LED DOT compliant stop/tail/turn, clearance, and mid turn
- Landing Gear: 2 speed, 55,000 lbs. capacity

FSA26-EQU24.0: Equipment
Item Group Specifications

Trailer: Deck Over Flatbed Trailer - 14,000 lbs. GVWR

The unit in this group must meet or exceed the following FSA Cooperative Purchasing Program specifications.

FSA Base Specification

- Dimensions: Deck width- 8’ 6”, overall deck length- 25’, dovetail length- 5’, GVWR- 14,000 lbs.
- Frame: 5” channel side rails, 3” channel cross members on 16” centers, channel undercarriage, 2” x 3/8” rub rail with stake pockets, pintle hitch or 2 5/16” ball coupler
- Deck: 2 x 8 pressure treated deck, Galvanized deck screws, 5’ dovetail, spring assist stand up ramps
- Axles: Tandem 7,000 lbs., electric brakes, breakaway brake system with wet cell battery
- Lighting System: Protected turn/stop/taillights, wiring run in conduit, heavy duty trailer plug
- Miscellaneous: Spare tire and rack, lockable toolbox, primed and painted- choice of color, tongue jack rated for GVWR of trailer

FSA26-EQU24.0: Equipment
Item Group Specifications

Trailer: Deck Over Equipment - 40,000 lbs. GVWR

The unit in this group must meet or exceed the following FSA Cooperative Purchasing Program specifications.

FSA Base Specification

- Deck: 24’ overall, 19’ w/ 60” dovetail, 96” width, 40,000 lbs. GVWR
- Decking: 2” hardwood
- Ramps: 60” fold up ramps, 22” width, spring assisted
- Tiedowns: Heavy duty tiedowns
- Axles: (2) 22,500 lbs. axles, oil lubricated
- Brakes: Air brakes, w/ ABS
- Suspension: Multi-leaf, sized for GVW of unit
- Tires: (8) 215/75R x 17.5 16 ply Radial
- Lighting: LED, DOT compliant stop, tail, turn and clearance
- Coupler: Adjustable pintle eye
- Jack: 2-speed jack, sized for trailer

FSA26-EQU24.0: Equipment
Item Group Specifications

Trailer: Detachable Neck Lowboy Trailer 100,000 lbs. GVWR

The unit in this group must meet or exceed the following FSA Cooperative Purchasing Program specifications.

FSA Base Specification

- Deck: 50’ overall, 24’ clear deck length, 14’ rear over axles, 8’6” deck width, swing out outriggers, 100,000 lbs. GVWR
- Decking: 1 ½” hardwood decking
- Ramps: Front folding ramps
- Tiedowns: 5 pair heavy duty tiedowns
- Flag holders: 2 pairs
- Axles: 3, sized to meet GVWR of unit, oil lubricated
- Brakes: Air brakes, w/ ABS, automatic slack adjusters
- Suspension: Air ride type, sized for GVWR of unit
- Tires: 235/70R 22.5 Radial tires
- Lighting: LED DOT compliant stop/tail/turn, clearance, and mid turn
- Detachable Gooseneck: 48” kingpin height, fixed neck, 96” swing radius, hydraulic lift, hydraulic support, toolbox on neck

FSA26-EQU24.0: Equipment
Item Group Specifications

Trailer: Enclosed Cargo Trailer - 7,000 lbs. GVWR

The unit in this group must meet or exceed the following FSA Cooperative Purchasing Program specifications.

FSA Base Specification

- Dimensions: Width- 7', length- 16', 7,000 lbs. GVWR
- Frame: Formed angle top and bottom sills, all exposed steel primed and painted, positive lock ball coupler, tongue jack, safety chains- DOT rated
- Floor/Walls/Roof: ¾" exterior grade plywood floor, ¼" plywood interior liner, .030" prefinished aluminum exterior, state colors, smooth galvanized steel or one-piece aluminum roof, extruded aluminum bottom trim, extruded aluminum roof cove with drip rail, double locking door on rear
- Axles: Axles and suspension rated for GVWR of trailer, 15" wheels, 205 x 15 trailer rated tires, electric brakes with breakaway switch
- Lighting System: Protected turn/stop/taillights, clearance lights, wiring run in conduit, heavy duty trailer plug
- Miscellaneous: Spare wheel and tire

FSA26-EQU24.0: Equipment
Item Group Specifications

Trailer: Flatbed Tilt Trailer - 40,000 lbs. GVWR

The unit in this group must meet or exceed the following FSA Cooperative Purchasing Program specifications.

FSA Base Specification

- Deck: 24’ knife edge tilt deck, 4’ stationary, 102” width, 40,000 lbs. GVWR
- Decking: Hardwood
- Tilt Cylinders: Dual cushioning hydraulic tilt cylinders
- Latch: Tilt deck locking system w/ safety pin
- Tiedowns: Heavy duty tiedowns
- Axles: (2) 20,000 lbs. axles, oil lubricated
- Brakes: Brakes, w/ ABS
- Suspension: Multi-leaf, sized for GVWR of unit
- Tires: (8) 235/75R x 17.5 16 ply radial
- Lighting: LED rubber mounted, DOT compliant stop, tail, turn and clearance
- Coupler: Adjustable pintle eye, rated for GVWR of trailer
- Toolbox: Located in tongue, lockable
- Jack: 2-speed jack, sized for GVWR of trailer

FSA26-EQU24.0: Equipment
Item Group Specifications

Trailer: Fixed Neck Lowboy Trailer - 70,000 lbs. GVWR

The unit in this group must meet or exceed the following FSA Cooperative Purchasing Program specifications.

FSA Base Specification

- Deck: 43’ overall, 27’ clear deck length, 4’ dovetail, 70,000 lbs. GVWR
- Decking: 1 ½” hardwood decking
- Ramps: 8’ x 3’, fold up ramps, hydraulically raised
- Tiedowns: 8 pair heavy duty tiedowns
- Flag holders: 2 pairs
- Axles: 2 sized to meet GVWR of unit, oil lubricated hubs
- Brakes: Air brakes, w/ ABS, automatic slack adjusters
- Suspension: Spring type, sized for GVWR of unit
- Tires: 235/75R 17.5 Radial tires
- Lighting: LED DOT compliant stop/tail/turn, clearance, and mid turn
- Gooseneck: 48” kingpin height, fixed neck, 84” swing radius, toolbox on neck
- Landing Gear: 2 speed, 50,000 lbs. capacity

FSA26-EQU24.0: Equipment
Item Group Specifications

Trailer: Hydraulic Drop Deck Trailer - 13,500 lbs. GVWR

The unit in this group must meet or exceed the following FSA Cooperative Purchasing Program specifications.

FSA Base Specification

- GVWR: 13,500 lbs.
- Deck: 75” x 14’, ground flat loading
- Lift Mechanism: Hydraulic
- Suspension: Rubber or air
- Deck: Steel treadplate
- Brakes: Electric on all axles
- Tires: 235/80R16 LRE Radial
- Lighting: All LED DOT compliant, stop/tail/turn, clearance
- Coupler: A-frame adjustable
- Tie Downs: Heavy duty D-Ring

FSA26-EQU24.0: Equipment
Item Group Specifications

Trailer: Hydraulic Tail Trailer - 70,000 lbs. GVWR

The unit in this group must meet or exceed the following FSA Cooperative Purchasing Program specifications.

FSA Base Specification

- Dimensions: Deck width- 8’ 6”, overall length- 48’, deck length- 25’, hydraulic tail- 12’ (8’ with 4’ fold under), 70,000 lbs. GVWR
- Frame: Cambered “I” beam main frame, 49” kingpin height, 16” kingpin setting, 82” swing clearance, 8’ upper deck length
- Deck: 1 ½” decking, 1 ½”, floor plate over wheels, traction plate on hydraulic tail
- Hydraulic Tail: 8’ main tail, 4’ fold under tail, hydraulic actuated with tail lock, 14-degree load angle
- Landing Gear: Pin drop type or 2 speed type
- Axles/Suspension/Tires: 2- 22,500 lbs. axles, oil seal hubs, 6.5 x 17.5 steel wheels, 235/75R x 17.5 radial tires, air brakes with automatic slack adjustors, ABS brake system, air ride suspension with auto and manual controls
- Lighting: LED lighting, wiring in conduit, mid turn signals, lighting as per DOT regulations
- Miscellaneous Equipment: 12,000 lbs. hydraulic winch mounted on upper deck over kingpin, wireless control, toolbox on upper deck, hydraulic tail controls both sides, air ride controls with dump valve

FSA26-EQU24.0: Equipment
Item Group Specifications

Trailer: Leachate Tanker - 6,500 gallons

The unit in this group must meet or exceed the following FSA Cooperative Purchasing Program specifications.

FSA Base Specification

- Approximate Dimensions: Length: 42', fifth wheel height- 49", capacity- 6,500 gallon,
- Tank Construction: Stainless steel, external ring, one compartment, 6,500 gallon, straight round w/ slope to rear, two baffles, three manways (lug) one located center and one in each baffled section, two manway cleanouts (4 lug) located in front head and rear head at bottom
- Top Walkway: Grip strut 12" width, extending from rear to front manway, with handrail, and ladder to access walkway
- Discharges, Valves, and Plumbing: Pressure/vacuum relief valve 15 psi in manhole cover, 6" discharge with sliding gate valve at rear of tank to allow gravity discharge, cam lock fitting type
- Hose Carriers: Located on fenders
- Cabinets: Two cabinets mounted curbside and roadside ahead of suspension
- Trailer Construction: Stainless steel frame
- Axles: Two axles sized for GVWR of unit, oil lubricated hubs
- Brakes: Air brakes w/ ABS and rollover protection, aluminum air tanks, automatic slack adjusters
- Tires: Radial tires sized for GVWR of unit
- Landing Gear: Sized for GVWR of unit
- Lights: LED clearance, stop/turn/tail, all wiring run in protective conduit, work light, w/ switch at rear, all wiring run to junction box at front of trailer
- Color: Stainless Steel

FSA26-EQU24.0: Equipment
Item Group Specifications

Trailer: Livestock Trailer - 7,000 lbs. GVWR

The unit in this group must meet or exceed the following FSA Cooperative Purchasing Program specifications.

FSA Base Specification

- GVWR: 7,000 lbs.
- Stall Size: 76” x 16’
- Interior Height: 6’ 6”
- Doors: Side escape door and full swing rear, center cut gate
- Deck: Treated pine
- Axles: (2) 3,500 lbs., quick lubricating
- Brakes: Electric on all axles
- Suspension: Multi-leaf
- Tires: 205/75R15 Radial
- Lighting: All LED DOT compliant, stop/tail/turn, clearance
- Coupler: A-frame ball style
- Jack: 2,000 lbs. heavy duty

FSA26-EQU24.0: Equipment
Item Group Specifications

Trailer: Mobile Fuel Trailer - 460 gallons

The unit in this group must meet or exceed the following FSA Cooperative Purchasing Program specifications.

Note: This is for Diesel Fuel Only.

FSA Base Specification

- Fuel Tank: 460-gallon capacity, pressure tested, internal baffles, fuel gauge, drain, 2 fill ports, vented cap, lockable cap
- Fuel Pump System: Electric fuel pump, spin on filter, fill hose w/ rack, fill nozzle, on board battery, protected wiring to fuel pump
- Frame: 5” channel frame
- Axles: Tandem axles rated for GVWR of trailer, electric brakes, breakaway brake system with well cell battery
- Wheels and Tires: Steel wheels, and radial tires rated for GVWR of trailer
- Lighting System: DOT compliant marking and LED turn/stop/taillights, wiring run in conduit, heavy duty trailer plug
- Hitch: Ball type or pintle hitch (customer will designate)
- Miscellaneous: Lockable toolbox, tongue jack rated for GVWR of trailer, fenders

FSA26-EQU24.0: Equipment
Item Group Specifications

Trailer: Multi Tank Fuel/Service 880 gallons Non-Hazmat - 14,000 lbs. GVWR

The unit in this group must meet or exceed the following FSA Cooperative Purchasing Program specifications.

Note: This is for Diesel Fuel Only.

FSA Base Specification

- GVWR: 14,000 lbs.
- Frame: Sized for GVWR of trailer mounted multi tanks, and equipment
- Axles: Tandem 7,000 lbs., axles, electric brakes, breakaway brake system
- Tires: ST 235/80R16, steel wheels
- Lighting System: DOT compliant lighting and marking, protected wiring run in conduit
- Multi Tank Unit: 8 Tanks, 110 gal each tank, 880-gal total storage, lockable fill caps, sight fuel level gauge
- Pump System: 12volt 25 GPM pump, pump manifold, 35’ x 1” retracting hose reel, auto trip nozzle, filter, battery, power cables, pump system enclosed w /locks
- Miscellaneous: Tongue jack rated for GVWR of trailer, adjustable hitch, fire extinguisher

FSA26-EQU24.0: Equipment
Item Group Specifications

Trailer: Pothole Patch Unit - 12,000 lbs. GVWR

The unit in this group must meet or exceed the following FSA Cooperative Purchasing Program specifications.

FSA Base Specification

- Dimensions: Length- 200”, width- 90”, height-75” (approximate)
- Weight: 3,300 lbs., (empty)
- Capacity: 2.0 cubic yds., 3 ton
- Trailer Frame: Frame constructed for GVWR of unit, adjustable pintle hitch
- Axles: Tandem axles sized for GVWR of unit, electric brakes, breakaway brake system
- Tires: Rated for GVWR of unit, steel wheels
- Lighting System: DOT compliant lighting and marking
- Power: Battery powered, w/ on board charger
- Asphalt Hopper: 2.0 cubic yds. capacity, hydraulic dump (scissor hoist type), hydraulic top door lift, auger discharge w/folding platform, or gravity discharge
- Heating System: Oil jacketed, or double wall insulated, diesel burner type, w/ temperature control
- Miscellaneous: Toolbox, tongue jack rated for GVWR of trailer

FSA26-EQU24.0: Equipment
Item Group Specifications

Trailer: Pressure/Vacuum Trailer - 6,000 gallons

The unit in this group must meet or exceed the following FSA Cooperative Purchasing Program specifications.

FSA Base Specification

- Approximate Dimensions: Length: 42', fifth wheel height- 49", capacity- 6,000-gal, operating pressure- 22 "hg w/ vacuum relief, 22 PSI pressure
- Tank Construction: Stainless steel, external ring, one compartment, 6,000 gal, straight round w/ slope to rear, baffles, three manways (lug) one located center and one in each baffled section, manway cleanouts located in rear head at bottom
- Top Walkway: Grip strut 12" width, extending from rear to front manway, with handrail, and ladder to access walkway
- Discharges, Valves, and Plumbing: Manufacturers standard plumbing, camlock fittings, drains, suitable for a vacuum / pressure trailer loading system
- Pump: Hydraulically driven, bi-directional pump, muffler w/ oil reservoir, directional flow control valve, stainless piping for pump hydraulics from pump to front curbside for truck attachment
- Hose Carriers: Located on fenders
- Cabinets: Tool cabinet mounted roadside ahead of suspension
- Trailer Construction: Stainless steel frame
- Suspension: Manufacturers standard suspension to meet GVWR of trailer
- Axles: Two axles sized for GVWR of unit, oil lubricated hubs
- Brakes: Air brakes w/ ABS and rollover protection, aluminum air tanks, automatic slack adjusters
- Tires: Radial tires sized for GVWR of unit, aluminum wheels w/ mudflaps
- Landing Gear: Sized for GVWR of unit
- Lights: LED clearance, stop/turn/tail, all wiring run in protective conduit, work light, w/ switch in cabinet, all wiring run to junction box at front of trailer
- Color: Stainless Steel

FSA26-EQU24.0: Equipment
Item Group Specifications

Trailer: Pull Behind Dump Trailer - 14,000 lbs. GVWR

The unit in this group must meet or exceed the following FSA Cooperative Purchasing Program specifications.

FSA Base Specification

- GVWR: 14,000 lbs.
- Bed: Grease fittings on all hinges, D-ring tie downs
- Bed Size & Frame: Width- 6’ 8”, length- 14’, deck height- 24”, tube steel box, 10GA bed floor, rear stabilizers, 12,000 lbs. tongue jack, 20” high sides and tailgate minimum
- Bed Lift: Scissor type hydraulic lift or telescoping cylinder, 12-volt power unit with battery, 15’ pendant control
- Axles: Tandem 7,000 lbs., sized for GVWR of trailer, 4-wheel electric brakes with breakaway
- Miscellaneous: Conspicuity tape on sides, tail/stop/turn lights, 7-way trailer plug, tarp system, spare tire, pintle type hitch or ball (customer selected)

FSA26-EQU24.0: Equipment
Item Group Specifications

Trailer: Refrigeration/Freezer Trailer - 7,000 lbs. GVWR

The unit in this group must meet or exceed the following FSA Cooperative Purchasing Program specifications.

FSA Base Specification

- GVWR: 7,000 lbs.
- Cooler Box Size: 72” x 12’
- Interior Height: 6’ 5”
- Temperature Range: 0°F to 50°F
- Input Voltage: 120V 15A
- Insulation: R-25
- Food Safety: Anti-microbial gel or stainless interior coating
- Doors: 48” rear door with freezer strips
- Floor: ¾” keg duty floor
- Axles: (2) 3,500 lbs., quick lubricating
- Brakes: electric on all axles
- Tires: 205/75R15 Radial tires
- Lighting: All LED DOT compliant, stop/tail/turn, clearance
- Jack: 2,000 lbs. heavy duty
- Coupler: A frame ball type

FSA26-EQU24.0: Equipment
Item Group Specifications

Trailer: Restroom Trailer ADA Compliant

The unit in this group must meet or exceed the following FSA Cooperative Purchasing Program specifications.

FSA Base Specification

- Trailer Construction:
  - Sized for 1 women's, 1 men's, and an ADA wheelchair accessible restroom
  - Frame: Steel frame
  - Axles: Sized for GVWR of trailer, electric brakes
  - Suspension: Hydraulically lowering and raising type suspension
  - Tires and Wheels: Sized for GVWR of trailer
  - Lights: LED turn, stop, and clearance lights DOT compliant
  - Exterior: Aluminum exterior skin, color white
- Trailer Interior Construction:
  - Interior Walls and Ceiling: Smooth aluminum skin, color White, fresh air supply and return
  - Floor: Heavy duty flooring
  - Lighting: LED lighting throughout interior, and porch
  - Mechanical Closet: Fresh water tank system and pump w/ level indicator, electric water heater, waste tank with level indicator, water distribution system, electrical system
  - HVAC System: Roof mount A/C with heat, wall mount thermostat
- Standard Restroom Construction (Women's and Men's Restroom)
  - Doors: Lockable entry doors
  - Trim Level: Soap dispenser, shatterproof mirror ,toilet paper holder, waste basket, paper towel dispenser, self-closing faucet, sink , toilet
- ADA Accessible Restroom Construction:
  - Note: Construction and trim must meet or exceed all current ADA compliance regulations
  - Door: Large wheelchair type entry door , lockable
  - Ramp: Ramp/landing system, with railings, aluminum , portable and easy setup
  - Sink: High clearance sink
  - Toilet: ADA Compliant toilet

  - Handrails and Grab bars: Stainless steel
  - Trim Level: Soap dispenser, shatterproof mirror, toilet paper holder, waste basket, paper towel dispenser, self-closing faucet
- Hook Ups:
  - 120v, 30 amp twist lock w/ 25’ shoreline
  - Fresh water hookup
  - 3” waste quick connect

FSA26-EQU24.0: Equipment
Item Group Specifications

Trailer: Sludge Trailer - 80,000 lbs. GVWR

The unit in this group must meet or exceed the following FSA Cooperative Purchasing Program specifications.

FSA Base Specification

- Dimensions: Length- 30', width- 96", side height- 54"
- Body Construction: ¼ "floor, 0.175 wall, 3/16" tailgate, aluminum
- Crossmembers: 12" spacing
- Top rail: Pockets for 6" wood
- Front and rear tarp caps: Aluminum
- Hoist System: Manufacturers standard hydraulic dump system, plumbed to front of trailer for truck hookups
- Lights: LED lights, mid turn lights, marking DOT compliant
- Tarp: Manual roll type, mesh type tarp
- Tailgate: Over slung type, extreme duty hinges
- Landing Gear: Sized for GVWR of unit
- Axles: Sized for GVWR of unit, oil type hubs
- Suspension: Sized for GVWR of unit, leaf spring type
- Brakes: ABS brake system, outboard mounted drums, automatic slack adjusters, aluminum air tanks
- Tires and Wheels: Steel disc 22.5 x 8.25, 11R22.5 Radial tires
- Miscellaneous: Tow hooks on rear

FSA26-EQU24.0: Equipment
Item Group Specifications

Trailer: Utility/Equipment Trailer - 7,000 lbs. GVWR

The unit in this group must meet or exceed the following FSA Cooperative Purchasing Program specifications.

FSA Base Specification

- Deck Size: 77” x 16’, 7,000 lbs. GVWR
- Sidewall Frame Height: 15” minimum
- Ramps: 48” rear folding tailgate
- Tie Downs: Heavy duty tie rings
- Deck: Treated pine
- Axles: (2) 3,500 lbs.
- Brakes: Electric on all axles
- Suspension: Multi-leaf
- Tires: 205/75R15 Radial tires
- Lighting: All LED DOT compliant, stop/tail/turn, clearance
- Coupler: A-frame 2 5/16” ball adjustable 4 hole
- Jack: 2,000 lbs. heavy duty

FSA26-EQU24.0: Equipment
Item Group Specifications

Trailer: Waste Trailer with Walking Floor

The unit in this group must meet or exceed the following FSA Cooperative Purchasing Program specifications.

FSA Base Specification

- Dimensions: Length- 48’, aluminum width- 102", side height- 100"
- Floor: Keith or Hallco running floor, extreme duty slats with center rib
- Crossmembers: 14" spacing
- Cross tubes: Center and rear cross tubes, bolt in style
- Lights: LED lights, mid-term lights.
- Tarp: Manual roll type- side to side, mesh type tarp
- Tailgate: Side swing- left or right, CAM locking system with safety chain, extreme duty hinges
- Landing Gear: Sized for GVWR of trailer
- Axles: TP axles or equivalent, same inner and outer bearings, outboard mount hubs
- Suspension: Cast hangers, leaf springs
- Tires and Wheels: Steel disc 22.5 x 8.25, 11R22.5 Radial tires
- Miscellaneous: Tow hooks on rear, air deflector in front

FSA26-EQU24.0: Equipment
Item Group Specifications

Transfer Switch: 600 Amp Automatic Transfer Switch

The unit in this group must meet or exceed the following FSA Cooperative Purchasing Program specifications.

FSA Base Specification

- Automatic Transfer Switch: Maximum voltage rating of 600 VAC, 60 Hz, 1Ph or 3Ph, open transition (break-before-make) transfer logic, transfer switch must meet the related industry standards: UL 1008- automatic transfer switches for use in emergency systems, CSA- automatic transfer switches, NEMA- industrial control and systems AC transfer switch equipment, IEC- automatic transfer switching equipment
- Rating: 600-amp, 3 pole, 277/480 VAC, 60Hz, enclosure type- NEMA 3r
- Functional: The automatic transfer switch shall automatically transfer the load to the generator supply in the event of a utility supply failure and return the load to the utility supply upon restoration. The automatic transfer switch power switching devices shall be mechanically and electrically interlocked to prevent the utility and generator supplies from being interconnected. All timers should be field adjustable to ensure proper field site compatibility.
- Automatic Sequence of Operation: When the voltage on any phase of the utility supply is below present levels of rated voltage for a preset time delay, a contact shall close to initiate start of the standby generator. The load shall transfer to the generator supply when the generator voltage and frequency have reached acceptable present levels, and the warmup time delay has expired. When the utility supply is restored to the above present levels of rated voltage on all phases, load transfer from generator to utility supply shall be initiated following expiry of the utility return timer. Once the transfer mechanism operates and opens the generator power switching device, the transfer mechanism shall stop in the neutral position (with both power switching devices open) for the duration of the neutral delay timer setting to allow load voltage to decay prior to reconnecting the utility supply. The load shall be re-connected to the utility supply once the neutral delay timer expires and the transfer mechanism continues operation and closes the utility power switching device. The load shall immediately re-transfer to the utility supply (if within acceptable limits) should the generator supply fail prior to the expiry of the utility transfer delay. The generator set shall continue to operate following

a load transfer for a cool down delay period, and then a contact shall open to stop the generator set. An “on load” test mode may be initiated which shall cause a simulated utility failure condition and transfer the load to the generator set. The transfer sequence shall be the same as for a utility power failure except a neutral delay sequence shall occur when transferring from utility to a generator source. The load shall immediately retransfer to the utility supply (if within acceptable limits) should the generator supply fail during an “on load” test mode.

- Factory Testing: A certified factory test report shall be shipped with each switch at time of shipment. The automatic transfer switch shall be factory tested prior to delivery to the purchaser. The following test shall be conducted by qualified factory personnel: visual inspection, mechanical tests, electrical tests, final inspection.
- Field Testing and Commissioning: The automatic transfer switch shall be field tested once installed at the project site to confirm proper operation of the system. Schedule and witness testing activities shall be coordinated with the project engineer, site contractor, and owner as required in advance of the testing date. A qualified local factory-trained field representative shall conduct the necessary test to ensure proper operation of the switch. Visual inspection- electrical and mechanical inspection to verify the installation is correct as recommended by the transfer switch manufacturer and as per National Electric Code (NEC) requirements. Mechanical tests- as a minimum, the following mechanical tests shall be performed on the transfer switch: power conductor torque verification, verification of mechanical interlock, manual ATS mechanism operation, all mechanical fasteners/wire connections tight, confirmations of correct transfer switch voltage, current and withstand ratings as is required for the application, Meggar testing the power cabling to the transfer switch, verification of correct power cabling phasing and phase rotation prior to energization, confirmation of settings for all timers & voltages sensors, full function test-normal operation- 3 complete cycles of failing the utility supply and transfer load to/from the generator set, verification of all test modes operates correctly.
- Conditions: In addition to equipment specified, each automatic transfer switch shall be equipped with all necessary equipment as specified by the manufacturer for this model and shall include but not be limited to the following necessary items: shrink wrap applied to the product to ensure a clean finish, one complete set of operation and

maintenance manuals, a two (2) year or 1,500 hour from date of standard standby warranty will apply from date of successful startup, labor, materials, and travel for the warranty period repair will be paid by manufacturer during normal business hours.

FSA26-EQU24.0: Equipment
Item Group Specifications

Trencher: Tractor Type

The unit in this group must meet or exceed the following FSA Cooperative Purchasing Program specifications.

Note: Unit bid is for the tractor equipped with a trencher. There are multiple other attachments available which can be purchased from the options page.

FSA Base Specification

- Weight: 9,000 lbs., w/ tracks, 5,900 lbs. w/optional tires
- Engine: 74hp diesel, liquid cooled
- Power Train: Hydrostatic, 4-wheel drive, front and rear wheel steer axles
- Travel Speed: Work mode- variable 0-2 mph, travel mode- variable 0-4 mph
- Tracks: Front and rear rubber tracks, or tires [optional]
- Hydraulics: Auxiliary hydraulics capable of accommodating different attachments, w/ quick disconnects
- Operators Station: ROPS, horn, seat belt, work lights, controls, engine monitoring system
- Trencher: Center mount, 60” trenching depth, 6”- 12” trenching width, hydraulic drive, auger
- Available Attachment Options: Available from options list, purchased separately) side shift trencher, plow, backhoe, backfill blade

FSA26-EQU24.0: Equipment
Item Group Specifications

Trencher: Walk Behind Trencher

The unit in this group must meet or exceed the following FSA Cooperative Purchasing Program specifications.

FSA Base Specification

- Weight: 1,550 lbs.
- Engine: 25 hp gasoline engine, 7-gallon fuel tank, positive feed oil system, starting/charging system
- Ground Drive: Hydrostatic, rubber ground tracks, 7" track width, 31" track length on ground
- Trencher Drive: Hydraulic drive, 8-gallon hydraulic reservoir, hydraulic system spin on filter
- Trencher Boom: Digging depth- 48", Auger diameter- 18", cutting width - 4"
- Controls: Operator presence safety system, low-oil shutdown system, steering control, trencher controls, travel control, boom controls

FSA26-EQU24.0: Equipment
Item Group Specifications

Underground Locating Equipment: Ground Penetrating Radar

Due to the complexity of this type of equipment, there are no base unit specifications.

Purchasers should research and verify the unit bid will meet their desired performance expectations and is compatible with their hardware/software, if required. It is recommended the vendor be contacted to assist with determining performance and compatibility needs prior to purchase.

Unit bid must be ready to work with batteries, carrying cases, and technical manuals.

FSA26-EQU24.0: Equipment
Item Group Specifications

Underground Locating Equipment: Utility Locator

Due to the complexity of this type of equipment, there are no base unit specifications.

Purchasers should research and verify the unit bid will meet their desired performance expectations and is compatible with their hardware/software, if required. It is recommended the vendor be contacted to assist with determining performance and compatibility needs prior to purchase.

Unit bid must be ready to work with batteries, carrying cases, and technical manuals.

FSA26-EQU24.0: Equipment
Item Group Specifications

Vehicle Barrier: Road Closure Barrier System

The unit in this group must meet or exceed the following FSA Cooperative Purchasing Program specifications.

FSA Base Specification

- Road Closure Modular Barrier system: Consisting of 48 portable barriers to close 6 lanes and a specifically built trailer to store and transport the barrier system (all included)
- Individual Modular Barrier: Weight 53 lbs., length 3.87 ‘, width 1.67’, height 2.7’, one person setup w/no tools, linkable, fold up for storage, certifications ASTM-F656-15, IWA 14-1:2013, PAS 68:2013, 667 KJ Energy Absorption, capable of stopping 7 tons of truck
- Transport Trailer: Purpose built for locker storage and transport of 48 barriers, DOT compliant

FSA26-EQU24.0: Equipment
Item Group Specifications

Vehicle Lift: Above Ground Drive On Platform Lift, Pantograph Type

The unit in this group must meet or exceed the following FSA Cooperative Purchasing Program specifications.

FSA Base Specification

- Lifting Capacity: 77,000 lbs.
- Platform Dimensions: Platform length 360” (not including ramps), platform width 30”, spacing between platforms 41”-46”, overall width 104”, collapsed height 17”, lift height 72”
- Lifting Mechanism: Pantograph type, electro/ hydraulic operated lift, automatic safety locks w/ multiple locking positions, automatic wheel chocks, emergency manual lowering system
- Controls: Manufacturer standard controls, console mounted
- Electrical: 208/220/440/480 3 phase 60 hz, sealed electrical system
- Certification: ANSI/ETL Certification

FSA26-EQU24.0: Equipment
Item Group Specifications

Vehicle Lift: In Ground Drive On Platform Lift, Scissor Type

The unit in this group must meet or exceed the following FSA Cooperative Purchasing Program specifications.

Note: This unit will require modification to the facility floor for installation.

FSA Base Specification

- Lifting Capacity: 50,000 lbs.
- Platform Dimensions: Platform length 341”, platform width 31”, spacing between platforms 43”, overall width 104”, collapsed height 15”, lift height 75”
- Lifting Mechanism: Scissor type, electro/ hydraulic operated lift, automatic safety locks w/ multiple locking positions, automatic wheel chocks,
- Controls: Manufacturer standard controls, console mounted
- Electrical: 220/440 3 phase 60 hz, sealed electrical system
- Certification: ANSI/ETL Certification

FSA26-EQU24.0: Equipment
Item Group Specifications

Vehicle Lift: Mobile - 2 Column, Cabled

The unit in this group must meet or exceed the following FSA Cooperative Purchasing Program specifications.

FSA Base Specification

- Lift Capacity: Combined lift capacity of 36,000 lbs., 18,000 lbs. per column
- Carriage: Rise 67", carriage fork to fit rim sizes 13" to 24", adjustable or reduction sleeve type
- Controls: Manufacturers standard controls
- Safety: Mechanical safety locks, override to manual operation in the event of power loss, meets all applicable safety standards
- Power: Cabled base, voltage 208-230 3-phase
- Equipment must comply with all applicable federal, state, and local regulations and meet OSHA, UL-201, NEC, and the latest ANSI standard, ANSI/ALI -ALCTV 2006 and IBC 2003, IBC 2006 Chapter 30 section 3001.2. Equipment must be structurally and safety tested and certified to ANSI/ALI -ALCTV 2006 automotive lift standard. A copy of listing certification shall be supplied as part of the acceptance of the bid. Equipment must be supplied with all ANSI, ALI/ETL safety booklet, ANSI operations, installation, and maintenance booklets, ANSI/ALI aloim-2008 standard and lifting point guides. Equipment must be supplied with all ANSI, ALI/ETL safety decals. Decals must be permanently placed on the lift in clear view for the operator.

FSA26-EQU24.0: Equipment
Item Group Specifications

Vehicle Lift: Mobile - 2 Column, Wireless

The unit in this group must meet or exceed the following FSA Cooperative Purchasing Program specifications.

FSA Base Specification

- Lift Capacity: Combined lift capacity of 36,000 lbs., 18,000 lbs. per column
- Carriage: Rise 67”, carriage fork to fit rim sizes 13” to 24”, adjustable or reduction sleeve type
- Controls: Manufacturers standard controls
- Safety: Mechanical safety locks, override to manual operation in the event of power loss, meets all applicable safety standards, training included with purchase
- Power: Wireless
- Equipment must comply with all applicable federal, state, and local regulations and meet OSHA, UL-201, NEC, and the latest ANSI standard, ANSI/ALI -ALCTV 2006 and IBC 2003, IBC 2006 Chapter 30 section 3001.2. Equipment must be structurally and safety tested and certified to ANSI/ALI -ALCTV 2006 automotive lift standard. A copy of listing certification shall be supplied as part of the acceptance of the bid. Equipment must be supplied with all ANSI, ALI/ETL safety booklet, ANSI operations, installation, and maintenance booklets, ANSI/ALI aloim-2008 standard and lifting point guides. Equipment must be supplied with all ANSI, ALI/ETL safety decals. Decals must be permanently placed on the lift in clear view for the operator.

FSA26-EQU24.0: Equipment
Item Group Specifications

Vehicle Lift: Mobile - 4 Column, Cabled

The unit in this group must meet or exceed the following FSA Cooperative Purchasing Program specifications.

FSA Base Specification

- Lift Capacity: Combined lift capacity of 72,000 lb.; 18,000 lb. per column.
- Carriage: Rise 67”, carriage fork to fit rim sizes 13” to 24”, adjustable or reduction sleeve type
- Controls: Manufacturers standard controls
- Safety: Mechanical safety locks, override to manual operation in the event of power loss, meets all applicable safety standards
- Power: Cabled base
- Equipment must comply with all applicable federal, state, and local regulations and meet OSHA, UL-201, NEC, and the latest ANSI standard, ANSI/ALI -ALCTV 2006 and IBC 2003, IBC 2006 Chapter 30 section 3001.2. Equipment must be structurally and safety tested and certified to ANSI/ALI -ALCTV 2006 automotive lift standard. A copy of listing certification shall be supplied as part of the acceptance of the bid. Equipment must be supplied with all ANSI, ALI/ETL safety booklet, ANSI operations, installation, and maintenance booklets, ANSI/ALI aloim-2008 standard and lifting point guides. Equipment must be supplied with all ANSI, ALI/ETL safety decals. Decals must be permanently placed on the lift in clear view for the operator.

FSA26-EQU24.0: Equipment
Item Group Specifications

Vehicle Lift: Mobile - 4 Column, Wireless

The unit in this group must meet or exceed the following FSA Cooperative Purchasing Program specifications.

FSA Base Specification

- Lift Capacity: Combined lift capacity of 72,000 lbs., 18,000 lbs. per column
- Carriage: Rise 67", carriage fork to fit rim sizes 13" to 24", adjustable or reduction sleeve type
- Controls: Manufacturers standard controls
- Safety: Mechanical safety locks, override to manual operation in the event of power loss, meets all applicable safety standards, training included with purchase
- Power: Wireless
- Equipment must comply with all applicable federal, state, and local regulations and meet OSHA, UL-201, NEC, and the latest ANSI standard, ANSI/ALI -ALCTV 2006 and IBC 2003, IBC 2006 Chapter 30 section 3001.2. Equipment must be structurally and safety tested and certified to ANSI/ALI -ALCTV 2006 automotive lift standard. A copy of listing certification shall be supplied as part of the acceptance of the bid. Equipment must be supplied with all ANSI, ALI/ETL safety booklet, ANSI operations, installation, and maintenance booklets, ANSI/ALI aloim-2008 standard and lifting point guides. Equipment must be supplied with all ANSI, ALI/ETL safety decals. Decals must be permanently placed on the lift in clear view for the operator.

FSA26-EQU24.0: Equipment
Item Group Specifications

Vehicle Lift: Mobile - 6 Column, Cabled

The unit in this group must meet or exceed the following FSA Cooperative Purchasing Program specifications.

FSA Base Specification

- Lift Capacity: Combined lift capacity of 108,000 lbs., 18,000 lbs. per column
- Carriage: Rise 67", carriage fork to fit rim sizes 13" to 24", adjustable or reduction sleeve type
- Controls: Manufacturers standard controls
- Safety: Mechanical safety locks, override to manual operation in the event of power loss, meets all applicable safety standards
- Power: Cabled base
- Equipment must comply with all applicable federal, state, and local regulations and meet OSHA, UL-201, NEC, and the latest ANSI standard, ANSI/ALI -ALCTV 2006 and IBC 2003, IBC 2006 Chapter 30 section 3001.2. Equipment must be structurally and safety tested and certified to ANSI/ALI -ALCTV 2006 automotive lift standard. A copy of listing certification shall be supplied as part of the acceptance of the bid. Equipment must be supplied with all ANSI, ALI/ETL safety booklet, ANSI operations, installation, and maintenance booklets, ANSI/ALI aloim-2008 standard and lifting point guides. Equipment must be supplied with all ANSI, ALI/ETL safety decals. Decals must be permanently placed on the lift in clear view for the operator.

FSA26-EQU24.0: Equipment
Item Group Specifications

Vehicle Lift: Mobile - 6 Column, Wireless

The unit in this group must meet or exceed the following FSA Cooperative Purchasing Program specifications.

FSA Base Specification

- Lift Capacity: Combined lift capacity of 108,000 lbs., 18,000 lbs. per column
- Carriage: Rise 67", carriage fork to fit rim sizes 13" to 24", adjustable or reduction sleeve type
- Controls: Manufacturers standard controls
- Safety: Mechanical safety locks, override to manual operation in the event of power loss, meets all applicable safety standards: training included with purchase
- Power: Wireless
- Equipment must comply with all applicable federal, state, and local regulations and meet OSHA, UL-201, NEC, and the latest ANSI standard, ANSI/ALI -ALCTV 2006 and IBC 2003, IBC 2006 Chapter 30 section 3001.2. Equipment must be structurally and safety tested and certified to ANSI/ALI -ALCTV 2006 automotive lift standard. A copy of listing certification shall be supplied as part of the acceptance of the bid. Equipment must be supplied with all ANSI, ALI/ETL safety booklet, ANSI operations, installation, and maintenance booklets, ANSI/ALI aloim-2008 standard and lifting point guides. Equipment must be supplied with all ANSI, ALI/ETL safety decals. Decals must be permanently placed on the lift in clear view for the operator.

FSA26-EQU24.0: Equipment
Item Group Specifications

Vehicle Lift: Mobile - 8 Column, Cabled

The unit in this group must meet or exceed the following FSA Cooperative Purchasing Program specifications.

FSA Base Specification

- Lift Capacity: Combined lift capacity of 144,000 lbs.; 18,000 lb. per column.
- Carriage: Rise 67", carriage fork to fit rim sizes 13" to 24", adjustable or reduction sleeve type
- Controls: Manufacturers standard controls
- Safety: Mechanical safety locks, override to manual operation in the event of power loss, meets all applicable safety standards
- Power: Cabled base
- Equipment must comply with all applicable federal, state, and local regulations and meet OSHA, UL-201, NEC, and the latest ANSI standard, ANSI/ALI -ALCTV 2006 and IBC 2003, IBC 2006 Chapter 30 section 3001.2. Equipment must be structurally and safety tested and certified to ANSI/ALI -ALCTV 2006 automotive lift standard. A copy of listing certification shall be supplied as part of the acceptance of the bid. Equipment must be supplied with all ANSI, ALI/ETL safety booklet, ANSI operations, installation, and maintenance booklets, ANSI/ALI aloim-2008 standard and lifting point guides. Equipment must be supplied with all ANSI, ALI/ETL safety decals. Decals must be permanently placed on the lift in clear view for the operator.

FSA26-EQU24.0: Equipment
Item Group Specifications

Vehicle Lift: Mobile - 8 Column, Wireless

The unit in this group must meet or exceed the following FSA Cooperative Purchasing Program specifications.

FSA Base Specification

- Lift Capacity: Combined lift capacity of 144,000 lbs., 18,000 lbs. per column
- Carriage: Rise 67", carriage fork to fit rim sizes 13" to 24", adjustable or reduction sleeve type
- Controls: Manufacturers standard controls
- Safety: Mechanical safety locks, override to manual operation in the event of power loss, meets all applicable safety standards, training included with purchase
- Power: Wireless
- Equipment must comply with all applicable federal, state, and local regulations and meet OSHA, UL-201, NEC, and the latest ANSI standard, ANSI/ALI -ALCTV 2006 and IBC 2003, IBC 2006 Chapter 30 section 3001.2. Equipment must be structurally and safety tested and certified to ANSI/ALI -ALCTV 2006 automotive lift standard. A copy of listing certification shall be supplied as part of the acceptance of the bid. Equipment must be supplied with all ANSI, ALI/ETL safety booklet, ANSI operations, installation, and maintenance booklets, ANSI/ALI aloim-2008 standard and lifting point guides. Equipment must be supplied with all ANSI, ALI/ETL safety decals. Decals must be permanently placed on the lift in clear view for the operator.

FSA26-EQU24.0: Equipment
Item Group Specifications

Vehicle Lift: Above Ground - 2 Post Asymmetric Stationary Vehicle Lift 10k

The unit in this group must meet or exceed the following FSA Cooperative Purchasing Program specifications.

FSA Base Specification

- Lift Capacity: 10,000 lbs.
- Dimension: minimum width- 125”, minimum width between posts- 110”, minimum extended cylinder height- 142.5”, minimum full rise height- 72”, minimum ceiling height required- 12’
- Operation: Speed of rise- fully lowered to fully raised in 50 seconds
- Safety: Manual or automatic lock release, meets all applicable safety standards
- Motor: 2.0 hp 208-230 V minimum
- Accessories: Power upgrades options, air/electric workstation w/ filter/lubricator/regulator, tire tool, manager workstation w/ filter/lubricator/regulator, column height extensions, door protection
- Equipment must comply with all applicable federal, state, and local regulations and meet OSHA, UL-201, NEC, and the latest ANSI standard, ANSI/ALI -ALCTV 2006 and IBC 2003, IBC 2006 Chapter 30 section 3001.2. Equipment must be structurally and safety tested and certified to ANSI/ALI -ALCTV 2006 automotive lift standard. A copy of listing certification shall be supplied as part of the acceptance of the bid. Equipment must be supplied with all ANSI, ALI/ETL safety booklet, ANSI operations, installation, and maintenance booklets, ANSI/ALI aloim-2008 standard and lifting point guides. Equipment must be supplied with all ANSI, ALI/ETL safety decals. Decals must be permanently placed on the lift in clear view for the operator.

FSA26-EQU24.0: Equipment
Item Group Specifications

Vehicle Lift: Above Ground - 2 Post Symmetric Stationary Vehicle Lift 12k

The unit in this group must meet or exceed the following FSA Cooperative Purchasing Program specifications.

FSA Base Specification

- Lift Capacity: 12,000 lbs.
- Dimension: Minimum width- 139”, minimum width between posts- 114 7/8”, minimum extended cylinder height- 160”, minimum full rise height- 72”, maximum ceiling height required- 16’
- Operation: Speed of rise- fully lowered to fully raised in 90 seconds
- Safety: Manual or automatic lock release, meets all applicable safety standards
- Motor: 2.0 hp 208-230 V minimum
- Accessories: Power upgrades options, air/electric workstation, w/ filter/lubricator/regulator, tire tool manager workstation w/ filter/lubricator/regulator, column height extensions, door protection
- Equipment must comply with all applicable federal, state, and local regulations and meet OSHA, UL-201, NEC, and the latest ANSI standard, ANSI/ALI -ALCTV 2006 and IBC 2003, IBC 2006 Chapter 30 section 3001.2. Equipment must be structurally and safety tested and certified to ANSI/ALI -ALCTV 2006 automotive lift standard. A copy of listing certification shall be supplied as part of the acceptance of the bid. Equipment must be supplied with all ANSI, ALI/ETL safety booklet, ANSI operations, installation, and maintenance booklets, ANSI/ALI aloim-2008 standard and lifting point guides. Equipment must be supplied with all ANSI, ALI/ETL safety decals. Decals must be permanently placed on the lift in clear view for the operator.

FSA26-EQU24.0: Equipment
Item Group Specifications

Vehicle Lift: Above Ground - 2 Post Symmetric Stationary Vehicle Lift 15k

The unit in this group must meet or exceed the following FSA Cooperative Purchasing Program specifications.

FSA Base Specification

- Lift Capacity: 15,000 lbs.
- Dimension: Minimum width- 125”, minimum width between posts- 120”, minimum extended cylinder height- 160”, minimum full rise height- 72”, maximum ceiling height required- 17’
- Operation: Speed of rise- fully lowered to fully raised in 90 seconds
- Safety: Manual or automatic lock release, meets all applicable safety standards
- Motor: 2.0 hp 208-230 V minimum
- Accessories: Power upgrades options, air/electric workstation, w/ filter/lubricator/regulator, tire tool manager workstation w/ filter/lubricator/regulator, column height extensions, door protection.
- Equipment must comply with all applicable federal, state, and local regulations and meet OSHA, UL-201, NEC, and the latest ANSI standard, ANSI/ALI -ALCTV 2006 and IBC 2003, IBC 2006 Chapter 30 section 3001.2. Equipment must be structurally and safety tested and certified to ANSI/ALI -ALCTV 2006 automotive lift standard. A copy of listing certification shall be supplied as part of the acceptance of the bid. Equipment must be supplied with all ANSI, ALI/ETL safety booklet, ANSI operations, installation, and maintenance booklets, ANSI/ALI aloim-2008 standard and lifting point guides. Equipment must be supplied with all ANSI, ALI/ETL safety decals. Decals must be permanently placed on the lift in clear view for the operator.

FSA26-EQU24.0: Equipment
Item Group Specifications

Vehicle Lift: Above Ground - 2 Post Symmetric Stationary Vehicle Lift 18k

The unit in this group must meet or exceed the following FSA Cooperative Purchasing Program specifications.

FSA Base Specification

- Lift Capacity: 18,000 lbs.
- Dimension: Minimum width- 125”, minimum width between posts- 118”, minimum extended cylinder height- 142.5”, minimum full rise height- 85”, maximum ceiling height required- 17’
- Operation: Speed of rise- fully lowered to fully raised in 60 seconds
- Safety: Manual or automatic lock release, meets all applicable safety standards
- Motor: 3.0 hp 208-230 V minimum
- Accessories: Power upgrades options, air/electric workstation, w/ filter/lubricator/regulator, tire tool manager workstation w/ filter/lubricator/regulator, column height extensions, door protection
- Equipment must comply with all applicable federal, state, and local regulations and meet OSHA, UL-201, NEC, and the latest ANSI standard, ANSI/ALI -ALCTV 2006 and IBC 2003, IBC 2006 Chapter 30 section 3001.2. Equipment must be structurally and safety tested and certified to ANSI/ALI -ALCTV 2006 automotive lift standard. A copy of listing certification shall be supplied as part of the acceptance of the bid. Equipment must be supplied with all ANSI, ALI/ETL safety booklet, ANSI operations, installation, and maintenance booklets, ANSI/ALI aloim-2008 standard and lifting point guides. Equipment must be supplied with all ANSI, ALI/ETL safety decals. Decals must be permanently placed on the lift in clear view for the operator.

FSA26-EQU24.0: Equipment
Item Group Specifications

Vehicle Lift: Above Ground - 2 Post Versymmetric Stationary Vehicle Lift 10k

The unit in this group must meet or exceed the following FSA Cooperative Purchasing Program specifications.

FSA Base Specification

- Lifting Capacity: 10,000 lbs.
- Lifting Configuration: Versymmetric (symmetric & asymmetric) arms 3-stage front/3-stage rear, rise height- 74.125”, overall height- 134”/140”, overall height (cylinder extended)- 143”, overall width- 138.5”/ 143”, drive-thru clearance- 100”/104.5”, floor to overhead switch- 128.5”/134.5”, front arm reach- 20”-42”, rear arm reach- 37.625”-60”, screw pad height- 3.875”-6.125”, inside columns- 110”/114.5”, motor/voltage- 2 hp, 208V-230V, 60 Hz, 1 Ph, speed of rise- 38 seconds, ceiling height required 12’, ALI/ETL certified

FSA26-EQU24.0: Equipment
Item Group Specifications

Vehicle Lift: Above Ground - 4 Column, Alignment Lift with Front/Rear Jacks and Integrated Turntables and Slip Plates 14k

The unit in this group must meet or exceed the following FSA Cooperative Purchasing Program specifications.

FSA Base Specification

- Lifting Capacity: 15,000 lbs.
- Lifting Configuration: Open or closed- front open max, wheelbase- 210”, rise height- 78”, overall length- 277.25”, overall width- 142” front/134.5” rear, inside columns- 120”, between columns- 222.5”, height of columns- 99.5”/93.5”, width of runways- 20”, height of runways- 7”, width between runways- 43” max, 2-wheel alignment- 194”, 4-wheel alignment- 88”-158”, air supply required- 90-120 psi, motor/voltage- 2 hp, 208V-230V, 60 Hz, speed or rise- 85 seconds, minimum recommended bay size- 12’ x 26’, ALI/ETL certified, colors available- red, blue, black

FSA26-EQU24.0: Equipment
Item Group Specifications

Vehicle Lift: Above Ground - 4 Post Alignment Lift with Turnplates and Rolling Jack 30k

The unit in this group must meet or exceed the following FSA Cooperative Purchasing Program specifications.

FSA Base Specification

- Lifting Capacity: 30,000 lbs.
- Max Wheelbase: 244”
- Rise Height: 71”
- Overall Length: 25’ 8”
- Overall Width: 14’ 4”
- Inside Columns: 12’8”,
- Between Columns: 20’6”
- Height of Columns: 93”
- Width of Runways: 24”
- Height of Runways: 10”
- Width between Runways: 46”
- Entry Ramps: Drive on ramps
- Locks: Automatic safety lifting locks
- Wheel Stops: Automatic wheel stop system
- Turntables: Turntables / turnplates for ease of alignment
- Rolling Jack: Rolling jack, air operated
- Rail System: Rail system for rolling jacks and or [optional] drain pans
- Air System: Lift plumbed for air supply and rolling jack
- Air Supply Required: 90-120 psi,
- Motor/Voltage: 3 hp, 208V-230V, 60 Hz,1ph
- Speed or Rise: 126 seconds,
- ALI/ETL certified

FSA26-EQU24.0: Equipment
Item Group Specifications

Vehicle Lift: Above Ground - 4 Post, Lift 14k

The unit in this group must meet or exceed the following FSA Cooperative Purchasing Program specifications.

FSA Base Specification

- Lifting Capacity: 14,000 lbs.
- Max Wheelbase: 182”
- Rise Height: 6’6”
- Overall Length: 20’5”
- Overall Width: 10’ 11”
- Inside Columns: 9’8”,
- Between Columns: 16’4”
- Height of Columns: 7’6”
- Width of Runways: 20”
- Height of Runways: 7”
- Width Between Runways: 40”
- Entry Ramps: Drive on ramps
- Locks: Automatic safety lifting locks
- Wheel Chocks: Automatic wheel chock system
- Rail System: Rail system for optional rolling jacks and or drain pans
- Electrical Required :208V-230V, 60 Hz, 1ph
- Speed or Rise: 75 seconds
- ALI/ETL certified

FSA26-EQU24.0: Equipment
Item Group Specifications

Vehicle Lift: Above Ground - 4 Post, Lift 30k

The unit in this group must meet or exceed the following FSA Cooperative Purchasing Program specifications.

FSA Base Specification

- Lifting Capacity: 30,000 lbs.
- Max Wheelbase: 244”
- Rise Height: 71”
- Overall Length: 25’ 8”
- Overall Width: 14’ 4”
- Inside Columns: 12’8”,
- Between Columns: 20’6”
- Height of Columns: 93”
- Width of Runways: 24”
- Height of Runways: 10”
- Width Between Runways: 46”
- Entry Ramps: Drive on ramps
- Locks: Automatic safety lifting locks
- Wheel Chocks: Automatic wheel chock system
- Rail System: Rail system for optional rolling jacks and or drain pans
- Air Supply Required: 90-120 psi,
- Motor/Voltage: 3 hp, 208V-230V, 60 Hz, 1ph
- Speed or Rise: 126 seconds
- ALI/ETL certified

Bid Award

Contract: FSA26-EQU24.0, Equipment

Group: Sewer Cleaner: Combination Sewer Cleaning/Vacuum Machine Body - 10 cubic yd.

Item: 417, Vac-Con, VPD4210SA/1000, VPD4210SA/1000

Zone	Rank	Vendor	Price	Build File	Options File
Western	Primary	Southern Sewer Equipment Sales	$383,042.00	Build	Options
Northern	Primary	Southern Sewer Equipment Sales	$383,042.00	Build	Options
Central	Primary	Southern Sewer Equipment Sales	$383,042.00	Build	Options
Southern	Primary	Southern Sewer Equipment Sales	$383,042.00	Build	Options

Riviera Beach - Utility Special District

To:	Honorable Mayor, Chairperson and Utility Special District Board
From:	Joshua Niemann, Utility Special District Executive Director
Through:	William E. Wilkins, City Manager
Subject:	**Discussion of the Utility Special District, Board of Directors yearly salaries**
Date:	November 23, 2026
CC:	General Public

Background:

At the request of the Utility Special District, Chairmen Spiritis, the Utility Special District Board of Directors is to have a discussion regarding their yearly salaries.

City Goals:

The Citywide Goal is to Achieve Operational Excellence.

Fiscal/Budget Impact:

N/A

Recommendation:

It is recommended that the Mayor and Utility Special District Board have a discussion regarding the yearly salaries of the Board of Directors.

Attachments:

N/A

Riviera Beach - Utility Special District

To: Honorable Mayor, Chairperson and Utility Special District Board

From: Joshua Niemann, Utility Special District Executive Director

Through: William E. Wilkins, City Manager

Subject: **Discussion of the Mayor and The Utility Special District Board of Directors regarding the exceedance of approved purchase order amount by US Water Corporation**

Date: November 23, 2026

CC: General Public

Background:

Following a final reconciliation between U.S. Water's regional tracking and corporate accounting records, a total funding variance of $485,443.67 was identified across the engagement. While the District issued five purchase orders totaling $9,351,113.00, the active budget review encompasses four purchase orders across three Board resolutions totaling $9,326,113.00.

1. Approved Funding Breakdown

The engagement was funded across the following authorizations:

Resolution	PO Number(s)	Approval Date	Purpose	Authorized Amount
15-24UD	2024-5295, 2025-0695	Sept 10, 2024	Water quality & systems commissioning	$1,126,113.00
09-25UD	2025-2533	Feb 19, 2025	O&M staffing support	$4,200,000.00
19-25UD	2025-6544	Aug 20, 2025	Maintenance support	$4,000,000.00

Total	**Budget Review Total**	**$9,326,113.00**

2. Root Cause of the Variance

The variance stems from an accounting carry-forward error in early 2025 that obscured the true remaining budget balance for the remainder of the project:

- **Initial Overage ($295,418.12):** By January 1, 2025, only $134,615.51 remained under Resolution 15-24UD. Net invoices for January and February 2025 totaled $430,033.63, creating an overage of **$295,418.12**.
- **Tracking Discrepancy:** When Resolution 09-25UD ($4.2M) was approved in February 2025, U.S. Water's regional tracker began at the full $4,200,000.00 rather than deducting the $295,418.12 overage. As a result, available funds were overstated by **$295,418.12** every month through closeout.
- **Impact at Closeout:** At the end of April 2026, the true remaining balance was **$35,454.53**, though the regional tracker showed **$330,872.65**. Relying on the overstated balance, work continued through July 2026 before the discrepancy was caught during final corporate reconciliation

3. Closeout & Final Financial Position

Invoices from May through July 2026 exceeded the true remaining balance, resulting in the final variance (even after U.S. Water absorbed $57,384.00 in August 2026 costs via credit memo):

- **Total Authorized (J02958):** $9,326,113.00
- **Less Invoiced Through April 2026:** ($9,290,658.47)
- **True Balance Remaining (End of April 2026): $35,454.53**
- **Less May–July 2026 Invoices (SI150166, SI152888, SI155720):** ($578,282.20)
- **Plus August 2026 Credit Memo (SCR06656):** $57,384.00
- **Total Final Variance: ($485,443.67)**

4. Variance Attribution & Net Deficit

Following a joint review with the District, the total variance has been separated between the original commissioning overage and ongoing maintenance costs:

Attribution Category	Amount
Total Final Variance	**($485,443.67)**
Less: Overage attributable to Resolution 15-24UD (Jan/Feb 2025)	$295,418.12
Variance Attributable to Maintenance	**($190,025.55)**
Less: Available District funds identified	$118,000.00
Net Remaining Maintenance Deficit	**($72,025.55)**

City Goals:

The Citywide Goal is to Achieve Operational Excellence.

Fiscal/Budget Impact:

$485,443.67

Recommendation:

It is recommended that the Mayor and Utility Special District Board have a discussion regarding the exceedance of approved purchase order amounts by US Water Corporation for the site evaluation, management, and maintenance of the Utility Special District administration, water treatment plant, distribution system, and collection system.

Attachments:

1. USW - RBUSD Project Funding Variance - November 2026.pdf

U.S. Water Services, LLC
4939 Cross Bayou Blvd.
New Port Richey, FL 34652
866-753-8292

U.S. WATER SERVICES LLC | JOB J02958

Funding Variance

Riviera Beach Utility Special District | Budget reconciliation as of November 11, 2026

Summary

The Board authorized **$9,326,113** for this engagement through three resolutions, issued as four purchase orders. Net invoicing from September 2024 through July 2026 totals **$9,811,556.67**, which exceeds the authorization by **$485,443.67**, about **5.2%** of the total authorized.

The exceedance has two parts. First, January and February 2025 invoicing ran **$295,418.12** past Resolution 15-24UD, and that overage was not carried forward when Resolution 09-25UD was set up in U.S. Water's regional budget tracking. Second, because the tracked balance was overstated by that amount, work continued from May through July 2026 after the authorization had been fully used at the end of April 2026. Work from May through July 2026 also had to continue because the filter upgrade and its related instrumentation and control (I&C) functions were at a critical stage and had to be finished before resources were demobilized.

1. Funding authorized

PO Number	Resolution	Resolution Date	Amount	Purpose
2024-5295	15-24UD	September 10, 2024	$1,000,000	Water quality and systems commissioning
2025-0695	15-24UD	September 10, 2024	$126,113	Initial assessment agreement (performed August 2024), incorporated into Resolution 15-24UD; billed on invoice SI112465
2025-2533	09-25UD	February 19, 2025	$4,200,000	O&M staffing support
[PO number to be confirmed]	19-25UD	August 20, 2025	$4,000,000	Maintenance support
Total authorized			**$9,326,113**	

Note: A separate $25,000 purchase order (PO 2024-4958) funded an initial assessment and falls outside the J02958 budget review. It is not included in the totals in this document.

U.S. Water Services, LLC
4939 Cross Bayou Blvd.
New Port Richey, FL 34652
866-753-8292

2. Where the variance started: Resolution 15-24UD

By January 1, 2025, U.S. Water had invoiced $991,497.49 against Resolution 15-24UD, leaving $134,615.51. The January and February 2025 invoices totaled $432,045.64 ($430,033.63 after credits). The January invoice, SI112465, included the $126,113 initial assessment agreement cost that the resolution incorporated. Of the January–February total, $134,615.51 was covered by the remaining balance of Resolution 15-24UD. The other **$295,418.12** exceeded that resolution and should have been charged against Resolution 09-25UD when the Board approved it on February 19, 2025.

Resolution 15-24UD (POs 2024-5295 and 2025-0695)	**Amount**
Authorized	$1,126,113.00
Invoiced through January 1, 2025 (7 invoices)	($991,497.49)
Balance available before January–February 2025 invoices	$134,615.51
January 2025 invoice SI112465 (includes $126,113 initial assessment)	($229,176.88)
February 2025 invoice SI114350	($202,868.76)
Credits SCR04531 and SCR04637	$2,012.01
Amount exceeding Resolution 15-24UD	**($295,418.12)**
Balance of Resolution 09-25UD that should have been tracked ($4,200,000 less $295,418.12)	**$3,904,581.88**

U.S. Water's regional budget tracking began Resolution 09-25UD at its full $4,200,000 rather than $3,904,581.88. Every invoice after that was deducted correctly, but because the starting point did not include the reduction on the original amount, the tracked balance overstated the funds available by $295,418.12 every month for the rest of the engagement, including after Resolution 19-25UD was added in August 2025.

U.S. Water Services, LLC
4939 Cross Bayou Blvd.
New Port Richey, FL 34652
866-753-8292

3. How the authorization was used

The table below shows cumulative net invoicing against the cumulative authorization at each point a resolution was used up.

Milestone	Cumulative authorized	Cumulative invoiced	Balance
Through January 1, 2025 (15-24UD only)	$1,126,113.00	$991,497.49	$134,615.51
Through February 2025 (15-24UD exceeded)	$1,126,113.00	$1,421,531.12	($295,418.12)
Through August 2025 (15-24UD + 09-25UD)	$5,326,113.00	$4,767,455.56	$558,657.44
Through September 2025 (all three resolutions)	$9,326,113.00	$5,814,976.88	$3,511,136.12
Through April 2026	**$9,326,113.00**	**$9,290,658.47**	**$35,454.53**
Through July 2026 (final)	**$9,326,113.00**	**$9,811,556.67**	**($485,443.67)**

4. How it showed up at closeout

After the April 2026 invoice, the true remaining balance across all three resolutions was **$35,454.53**. With the $295,418.12 not carried forward, the tracked balance would have shown about $330,872.65, enough to cover the May invoice. On that basis, work continued from May through July 2026. The gap surfaced only when final reconciliation compared the regional tracking against U.S. Water's corporate accounting records.

Work from May through July 2026 also continued for an operational reason. The filter upgrade and the instrumentation and control (I&C) functions tied to the filters were at a critical point. That work had to be completed before U.S. Water demobilized its resources, which took place over June and July 2026. Stopping at the end of April would have left the filter upgrade and its controls unfinished.

U.S. Water Services, LLC
4939 Cross Bayou Blvd.
New Port Richey, FL 34652
866-753-8292

Final position against total authorization	Amount
Total authorized (three resolutions)	$9,326,113.00
Invoiced through April 2026	($9,290,658.47)
Balance remaining after April 2026	$35,454.53
May 2026 invoice SI150166 (unpaid)	($317,241.24)
June 2026 invoice SI152888 (unpaid)	($162,423.77)
July 2026 invoice SI155720 (unpaid)	($98,617.19)
July 2026 credit memo SCR06656	$57,384.00
Final variance	**($485,443.67)**

The May, June and July 2026 invoices total $578,282.20. After the July 2026 credit of $57,384.00, $520,898.20 remains unpaid. Had the January and February 2025 overage been carried into Resolution 09-25UD, the tracked balance would have matched the corporate records, and U.S. Water would have identified at the end of April 2026 that additional authorization was needed before continuing into May.

5. Attribution of the variance

Following review with the District, the $295,418.12 overage is attributed to Resolution 15-24UD (POs 2024-5295 and 2025-0695), where it originated, rather than to the maintenance authorization. Removing it from the final variance leaves $190,025.55 attributable to maintenance. After applying the $118,000 the District has identified as available, the remaining maintenance deficit is **$72,025.55**.

Attribution	Amount
Final variance	($485,443.67)
Overage attributable to Resolution 15-24UD	$295,418.12
Variance attributable to maintenance	**($190,025.55)**
District funds available	$118,000.00
Remaining maintenance deficit	**($72,025.55)**

U.S. Water Services, LLC
4939 Cross Bayou Blvd.
New Port Richey, FL 34652
866-753-8292

Appendix A. Invoice and credit ledger

All invoices and credits from the November 11, 2026 budget reconciliation. Invoices are shown in parentheses and credits as positive amounts. Yellow rows mark the first invoice under each resolution; red rows are entries that fall outside the total authorization of $9,326,113.

Invoice / Credit	Date	Amount	Cumulative net invoiced	Status	Note
SI103134	09/01/2024	($168,518.83)	$168,518.83	Paid	Res. 15-24UD in effect
SI105069	09/30/2024	($40,143.88)	$208,662.71	Paid	
SI104181	10/01/2024	($168,518.83)	$377,181.54	Paid	
SI105808	11/01/2024	($168,518.83)	$545,700.37	Paid	
SI108723	11/30/2024	($130,226.60)	$675,926.97	Paid	
SI107511	12/01/2024	($177,868.65)	$853,795.62	Paid	
SI110581	01/01/2025	($137,701.87)	$991,497.49	Paid	
SCR04531	01/31/2025	$1,654.88	$989,842.61	Paid	
SI112465	01/31/2025	($229,176.88)	$1,219,019.49	Paid	Includes $126,113 initial assessment (PO 2025-0695)
SCR04637	02/28/2025	$357.13	$1,218,662.36	Paid	
SI114350	02/28/2025	($202,868.76)	$1,421,531.12	Paid	
SI116164	03/31/2025	($451,393.57)	$1,872,924.69	Paid	Res. 09-25UD in effect
SCR04757	04/29/2025	$6,181.74	$1,866,742.95	Paid	
SI118127	04/30/2025	($362,639.94)	$2,229,382.89	Paid	
SI120154	05/31/2025	($567,953.42)	$2,797,336.31	Paid	
SI122042	06/30/2025	($392,663.10)	$3,189,999.41	Paid	
SCR05054	07/31/2025	$5,596.99	$3,184,402.42	Paid	
SI124964	07/31/2025	($843,824.26)	$4,028,226.68	Paid	
SI127504	08/31/2025	($739,228.88)	$4,767,455.56	Paid	Res. 19-25UD in effect
SI130473	09/30/2025	($1,047,521.32)	$5,814,976.88	Paid	
SI132885	10/31/2025	($832,609.03)	$6,647,585.91	Paid	
SCR05537	11/26/2025	$0.02	$6,647,585.89	Paid	
SI135216	11/30/2025	($754,721.64)	$7,402,307.53	Paid	

U.S. Water Services, LLC
4939 Cross Bayou Blvd.
New Port Richey, FL 34652
866-753-8292

Invoice / Credit	Date	Amount	Cumulative net invoiced	Status	Note
SI137735	12/31/2025	($286,475.60)	$7,688,783.13	Paid	
SCR05749	01/26/2026	$18,695.45	$7,670,087.68	Paid	
SCR05751	01/26/2026	$754,721.64	$6,915,366.04	Paid	Credit equal to SI135216
SCR05752	01/26/2026	$286,475.60	$6,628,890.44	Paid	Credit equal to SI137735
SI138531	01/26/2026	($780,820.75)	$7,409,711.19	Paid	
SI140027	01/31/2026	($289,162.56)	$7,698,873.75	Paid	
SI140106	01/31/2026	($410,052.89)	$8,108,926.64	Paid	
SI142490	02/28/2026	($427,262.16)	$8,536,188.80	Paid	
SI145170	03/31/2026	($408,656.47)	$8,944,845.27	Paid	
SI147676	04/30/2026	($345,813.20)	$9,290,658.47	Paid	Last invoice within authorization
SI150166	05/31/2026	($317,241.24)	$9,607,899.71	Unpaid	Exceeds authorization
SI152888	06/30/2026	($162,423.77)	$9,770,323.48	Unpaid	
SI155720	07/31/2026	($98,617.19)	$9,868,940.67	Unpaid	
SCR06656	07/31/2026	$57,384.00	$9,811,556.67		July 2026 credit
Net total		**($9,811,556.67)**	**$9,811,556.67**		

INVOICE

U.S. WATER SERVICES CORPORATION
4939 CROSS BAYOU BOULEVARD
NEW PORT RICHEY, FL 34652
United States

Invoice Number: SI150166
Invoice Date: 5/31/2026
Due Date 7/9/2026

All pricing anticipates payment by check or ACH. Due to additional cost incurred, services paid by credit card will require an additional 3.5% processing fee.

Bill To: City of Riviera Beach
600 West Blue Heron Blvd.
Finance & Admin Services
Riviera Beach, FL 33404
United States

Customer ID C01541
P.O. Number
WA:

Job Number: J02958
Job Description: City of Riviera Beach

Date	Item/Description	Task Number	Qty.	Unit	Unit Price	Total Price
5/31/2026	Utility Management Consultant	2003	96	EA	350.00	33,600.00
5/31/2026	Water Plant Manager	2003	97	EA	235.00	22,795.00
5/31/2026	Technical/Maintenance Manager	2003	152	EA	235.00	35,720.00
5/31/2026	Maintenance Support	2003	472.17	EA	92.66	43,751.27
5/31/2026	Per Diem Allowance	2003	74	EA	330.00	24,420.00
5/31/2026	Maintenance Purchase Allowance	2003	1	EA	136,482.58	136,482.58
5/31/2026	Contractors Allowable Markup (15%)	2003	1	EA	20,472.39	20,472.39

Click to Pay

Click Here to Pay

Remit To:
U.S. WATER SERVICES CORPORATION
4939 CROSS BAYOU BOULEVARD
NEW PORT RICHEY, FL 34652
Phone: (727) 848-8292 Ext. 219
Toll Free: (866) 753-8292 Ext. 219
Email: ar@uswatercorp.net

Subtotal:	**317,241.24**
Total Sales Tax:	0.00
Total USD:	**317,241.24**
Adjustments:	0.00
Amount Due:	**317,241.24**

INVOICE

U.S. WATER SERVICES CORPORATION
4939 CROSS BAYOU BOULEVARD
NEW PORT RICHEY, FL 34652
United States

Invoice Number: SI152888
Invoice Date: 6/30/2026
Due Date 8/10/2026

All pricing anticipates payment by check or ACH. Due to additional cost incurred, services paid by credit card will require an additional 3.5% processing fee.

Bill To: City of Riviera Beach
600 West Blue Heron Blvd.
Finance & Admin Services
Riviera Beach, FL 33404
United States

Customer ID C01541
P.O. Number
WA:

Job Number: J02958
Job Description: City of Riviera Beach

Date	Item/Description	Task Number	Qty.	Unit	Unit Price	Total Price
6/30/2026	Utility Management Consultant	2003	96	EA	350.00	33,600.00
6/30/2026	Water Plant Manager	2003	46.5	EA	235.00	10,927.50
6/30/2026	Technical/Maintenance Manager	2003	24	EA	235.00	5,640.00
6/30/2026	Maintenance Support	2003	169	EA	92.66	15,659.54
6/30/2026	Maintenance Purchase Allowance	2003	1	EA	83,997.16	83,997.16
6/30/2026	Contractors Allowable Markup 15%	2003	1	EA	12,599.57	12,599.57

Click to Pay

Click Here to Pay

Remit To:
U.S. WATER SERVICES CORPORATION
4939 CROSS BAYOU BOULEVARD
NEW PORT RICHEY, FL 34652
Phone: (727) 848-8292 Ext. 219
Toll Free: (866) 753-8292 Ext. 219
Email: ar@uswatercorp.net

Subtotal:	**162,423.77**
Total Sales Tax:	0.00
Total USD:	**162,423.77**
Adjustments:	0.00
Amount Due:	**162,423.77**

INVOICE

U.S. WATER SERVICES CORPORATION
4939 CROSS BAYOU BOULEVARD
NEW PORT RICHEY, FL 34652
United States

Invoice Number: SI155720
Invoice Date: 7/31/2026
Due Date 9/11/2026

All pricing anticipates payment by check or ACH. Due to additional cost incurred, services paid by credit card will require an additional 3.5% processing fee.

Bill To: City of Riviera Beach
600 West Blue Heron Blvd.
Finance & Admin Services
Riviera Beach, FL 33404
United States

Customer ID C01541
P.O. Number
WA:

Job Number: J02958
Job Description: City of Riviera Beach

Date	Item/Description	Task Number	Qty.	Unit	Unit Price	Total Price
7/30/2026	Utility Management Consultant	2003	88	EA	350.00	30,800.00
7/30/2026	Water Plant Manager	2003	1	EA	235.00	235.00
7/30/2026	Maintenance Support	2003	82.5	EA	92.66	7,644.45
7/30/2026	Maintenance Purchase Allowance	2003	1	EA	52,119.77	52,119.77
7/30/2026	Contractors Allowable Markup (15%)	2003	1	EA	7,817.97	7,817.97

Invoice Adjustments:
Credit Memo SCR06656: -57,384.00

Click to Pay

Click Here to Pay

Remit To:
U.S. WATER SERVICES CORPORATION
4939 CROSS BAYOU BOULEVARD
NEW PORT RICHEY, FL 34652
Phone: (727) 848-8292 Ext. 219
Toll Free: (866) 753-8292 Ext. 219
Email: ar@uswatercorp.net

Subtotal:	**98,617.19**
Total Sales Tax:	0.00
Total USD:	**98,617.19**
Adjustments:	-57,384.00
Amount Due:	**41,233.19**