ROCKLIN CITY COUNCIL

City Council Regular Meeting
City Hall - Council Chambers
3970 Rocklin Rd. Rocklin, CA 95677
Website: www.rocklin.ca.us

February 25, 2025
CONSOLIDATED MEETING AGENDA
City of Rocklin City Council
Public Financing Authority
General Session at 6:00 p.m.

AMENDED AGENDA
***Item C20, Resolution and Agreement Updated**
***Item D3, Ordinance Updated**

JILL GAYALDO, *Mayor*
DAVID BASS, *Vice Mayor*
KEN BROADWAY, *Council Member*
BILL HALLDIN, *Council Member*
GREG JANDA, *Council Member*

ALY ZIMMERMANN, *City Manager*
MATTHEW MCOMBER, *City Attorney*
DANIEL CHOE, *City Treasurer*
AVINTA SINGH, *City Clerk*

HOW TO PARTICIPATE

The City of Rocklin welcomes your interest and involvement in the City's legislative process. The City Council has established a procedure for addressing the Council. Persons wishing to address the City Council are asked to voluntarily complete and submit a speaker identification sheet to the City Clerk. Speaker identification sheets are available near the entrance of the Council Chambers. For items listed on the agenda, any person may address the City Council at the time the item is considered. Speakers are requested to restrict their comments to the item as it appears on the agenda and stay within the required three-minute time limit. The Brown Act does not permit the City Council to take action on items brought up under Citizens Addressing the City Council.

WRITINGS RECEIVED AFTER AGENDA POSTING

Any writing or documents related to an agenda item for this meeting provided to the City Council, Public Financing Authority or Successor Agency will be made available for public inspection at City Hall, 3970 Rocklin Road, Rocklin, during normal business hours.

AMERICANS WITH DISABILITIES ACT

In compliance with the Americans with Disabilities Act, if you require special assistance to participate in this meeting or other services in conjunction with this meeting, including receiving notices, agendas, and other writings in appropriate alternative formats, please contact our office at (916) 625-5560 at least 48 hours prior to the meeting or time when services are needed so that we may make every reasonable effort to accommodate you.

LEVINE ACT PROVISIONS

The Levine Act requires a party (or the party's agent(s)) to a proceeding before the City of Rocklin that involves any action or consideration to their contract, license, permit, or other entitlement for use, t o disclose any campaign contribution made to a City elected or appointed officer (including Councilmembers, Planning Commissioners, and members of other City boards and commissions) totaling more than $500 within the 12 months before the City decision.

AUDIO/VISUAL PRESENTATIONS

If making a presentation regarding an agenda item, all audio/visual materials must be submitted to the City Clerk or Secretary at least 72 hours in advance. The City is not responsible for the compatibility or operation of non-city devices or the functionality of non-city presentations.

POSTING OF AGENDA

In accordance with Government Code Section 54954.2(a) this agenda was posted on the City's bulletin board at City Hall, 3970 Rocklin Road, Rocklin, and City of Rocklin website at www.rocklin.ca.us.

AGENDA

MEETING INSTRUCTIONS

The public may listen to audio or view the meeting via live stream at https://www.rocklin.ca.us/agendas-minutes.
For those that do not plan on attending in person, but wish to make a public comment during the meeting, public comments will be accepted in email form until 3:00 p.m. on the meeting day. Public comments should be submitted to the City Clerk at PublicComments@rocklin.ca.us. Emailed public comments will be distributed to City Council and treated as a public record.

CALL TO ORDER

PLEDGE OF ALLEGIANCE

ROLL CALL

AGENDA REVIEW

CITIZENS ADDRESSING THE CITY COUNCIL

This is an opportunity for public comment on matters not listed on the agenda. Public comment on items listed on the agenda will be taken when the agenda item is called.

REPORTS FROM CITY COUNCIL AND CITY MANAGER

Reports from the City Council will include any AB1234 Reports.

CONSENT CALENDAR

Items C1 - C24 of the Consent Calendar are considered and acted upon by one Motion of the City Council. Item C25 (PFA1) is concurrently considered and acted upon by the Public Financing Authority of the City of Rocklin. Anyone may request an item be removed for separate consideration.

C1. Minutes of the February 4, 2025 Special Joint Meeting of the City Council and Planning Commission
Recommendation: Approve the Minutes of the February 4, 2025 Special Joint Meeting of the City Council and Planning Commission

C2. Minutes of the February 11, 2025 Regular Meeting of the City Council
Recommendation: Approve the Minutes of the February 11, 2025 Regular Meeting of the City Council.

C3. Amendments to the West Rocklin Annexation Area Pre-Zoning / PC2024-0001 (Second Reading of Ordinance)
Recommendation: Adopt an Ordinance of the City Council of the City of Rocklin Approving a Zoning Ordinance Amendment to Pre-Zone Two Parcels within the West Rocklin Annexation Area (West Rocklin Annexation Area Pre-Zoning PZ2024-0001).

C4. National Opioid Litigation Settlement with Kroger Co.
Recommendation: Adopt a Resolution of the City Council of the City of Rocklin Approving Participation in Settlement of National Opioid Litigation with Kroger Co; Appointing the City Manager as the City's Authorized Representative, and Authorizing the City Manager to Take all Reasonable and Necessary Actions.

C5. Clover Valley Funding Agreement
Recommendation: Adopt a Resolution of the City Council of the City of Rocklin Approving the Use of Funds Agreement between the City of Rocklin and Placer Land Trust for Clover Valley.

C6. Accounts Paid List - October to December 2024
Recommendation: Receive the Accounts Paid List for October 1, 2024 to December 31, 2024.

C7. Annual Comprehensive Financial Report and GANN Appropriations Limit Schedule for the Fiscal Year ended June 30, 2024
Recommendation: Adopt a Resolution of the City Council of the City of Rocklin Accepting the Annual Comprehensive Financial Report and GANN Appropriations Limit Schedule for the Fiscal Year Ended June 30, 2024.

C8. Fiscal Year 2023/24 Single Audit Report
Recommendation: Adopt a Resolution of the City Council of the City of Rocklin Accepting and Approving the Single Audit Report for the Year Ended June 30, 2024.

C9. Quarterly Treasurer's Report
Recommendation: Receive the Treasurer's Report for the Quarter Ending December 31, 2024.

C10. Various Purchases through Cooperative Purchase Agreements
Recommendation: Adopt a Resolution of the City Council of the City of Rocklin Approving and Authorizing the City Manager to Purchase Goods and Services through Cooperative Purchase Agreements for Fiscal Year 2024/25.

C11. Intention to Annex The Harper into Community Facilities District No. 1
Recommendation: Adopt a Resolution of the City Council of the City of Rocklin of Intention to Annex Territory to Rocklin Community Facilities District No. 1 (Annexation No. 87) and to Authorize the Levy of Special Taxes Therein (The Harper).

C12. Intention to Annex The Harper into Community Facilities District No. 5
Recommendation: Adopt a Resolution of the City Council of the City of Rocklin of Intention to Annex Territory to Rocklin Community Facilities District No. 5 (Annexation No. 74) and to Authorize the Levy of Special Taxes Therein (The Harper).

C13. Ordering the Fiscal Year 2025/26 Engineer's Reports
Recommendation:
A. Adopt a Resolution of the City Council of the City of Rocklin Ordering the Preparation of the Engineer's Report for Lighting Maintenance District No. 1 for the Fiscal Year 2025/26.
B. Adopt a Resolution of the City Council of the City of Rocklin Ordering the Preparation of the Engineer's Report for Landscape and Lighting Maintenance District No. 2 for the Fiscal Year 2025/26.

C14. CrowdStrike Endpoint Protection Security Software Contract
Recommendation: Adopt a Resolution of the City Council of the City of Rocklin Approving and Authorizing the City Manager to Execute a CrowdStrike Contract from CDW Government LLC.

C15. Comcate Contract for Access Rocklin
Recommendation: Adopt a Resolution of the City Council of the City of Rocklin (City) Approving the License and Ongoing Support and Services Contract with Comcate Software Inc and Authorizing the City Manager to Execute the Contract.

C16. Contract for Tyler Technologies Munis Enterprise Resource Planning (ERP) Solution
Recommendation: Adopt a Resolution of the City Council of the City of Rocklin Approving and Authorizing the City Manager to Execute a Maintenance Agreement with Tyler Technologies, Inc.

C17. Whitney Community Park Pump Track – Change Order No. 1

Recommendation: Adopt a Resolution of the City Council of the City of Rocklin Approving Change Order No. 1 and Authorizing the City Manager to Execute Change Order No. 1 with American Ramp Company, Inc.

C18. Vacation of Alley Between Oak Street and Pine Street and Property Line Reconfiguration

Recommendation:

A. Adopt a Resolution of the City Council of the City of Rocklin Ordering the Vacation of a Public Street – Alley Between Oak Street and Pine Street.
B. Adopt a Resolution of the City Council of the City of Rocklin Authorizing the City Manager to Execute and Record Grant Deeds to Create Two Parcels Within the City's Real Property Located Between Pacific Street, Oak Street, Railroad Avenue, and Pine Street.
C. Adopt a Resolution of the City Council of the City of Rocklin Accepting and Authorizing the City Manager to Record a Grant Deed from Community HousingWorks for the Real Property Located on the Southwest Side of Pine Street Between Railroad Avenue and Pacific Street/APN 010-121-006 and Authorizing the City Manager to Execute and Record a Grant Deed on Behalf of the City to Merge the Community HousingWorks Parcel with Adjacent City Property.

C19. Quarry Park Amphitheater Production Management Agreement - Amendment No. 1

Recommendation: Adopt a Resolution of the City Council of the City of Rocklin Approving and Authorizing the City Manager to Execute an Amended Agreement With Push the Show, LLC (majority-owned by Ineffable Music Group, Inc.) for Production Management at Quarry Park Amphitheater.

C20. Landscape Maintenance Agreement

Recommendation: Adopt a Resolution of the City Council of the City of Rocklin Approving a Landscape Maintenance Agreement and Authorizing the City Manager to Execute the Landscape Maintenance Agreement with Chapa-De Indian Health Program, Inc.

C21. Corporation Yard Storefront Glass Replacement Notice of CEQA Exemption and Bid Award

Recommendation:

A. Adopt a Resolution of the City Council of the City of Rocklin Approving a Notice of Exemption (Corporation Yard Storefront Glass Replacement).
B. Adopt a Resolution of the City Council of the City of Rocklin Awarding the Contract for the Corporation Yard Storefront Glass Replacement to American Window and Door Systems, Inc. and Authorizing the City Manager to Execute an Agreement.

C22. Corporation Yard Generator Bid Award
Recommendation:
A. Adopt a Resolution of the City Council of the City of Rocklin Approving A Notice of Exemption (Corporation Yard Emergency Generator).
B. Adopt a Resolution of the City Council of the City of Rocklin Awarding the Contract for the Corporation Yard Emergency Generator to James Day Construction, Inc., and Authorizing the City Manager to Execute an Agreement with James Day Construction, Inc.

C23. Landfill Monitoring Services Amendment No. 2
Recommendation: Adopt a Resolution of the City Council of the City of Rocklin Approving Amendment No. 2 to the Contract for Services with Tetra Tech, Inc. and Authorizing the City Manager to Execute Amendment No. 2.

C24. 2025 Striping and Marking Services Bid Award
Recommendation: Adopt a Resolution of the City Council of the City of Rocklin Awarding the Contract for the 2025 Striping and Marking Maintenance Services to Sierra Traffic Markings, Inc., and Authorizing the City Manager to Execute an Agreement.

C25. PFA1: Rocklin Public Financing Authority's Audited Basic Financial Statements for the Fiscal Year Ended June 30, 2024
Recommendation: Adopt a Resolution of the Public Financing Authority of the City of Rocklin Accepting the Audited Basic Financial Statements for the Fiscal Year Ended June 30, 2024.

DISCUSSION ITEMS

Discussion Items include oral presentations including those recommending "receive and file".

D1. Community Development Block Grant (CDBG) 2025-2029 Consolidated Plan - Discussion of Priority Needs and Goals
Recommendation: Receive a Presentation on the Community Development Block Grant (CDBG) 2025-2029 Consolidated Plan Proposed Priority Needs and Goals, and Provide Feedback to Staff.

D2. Fiscal Year 2024/25 Second Quarter: Financial Report and Strategic Plan Update
Recommendation:
A. Adopt a Resolution of the City Council of the City of Rocklin Accepting the Quarterly Financial Reports for the Quarter Ended December 31, 2024, and Amending the Fiscal Year 2024/25 Operating Budget.
B. Receive an Update on the 2023-2025 Strategic Plan Regarding Progress Made on the Work Plan for the Quarter Ended December 31, 2024.

D3. Establishing Campaign Contribution Regulations Regarding Redesignation of Committees and Accounts

Recommendation: Introduce, Waive the Full Reading and Read by Title Only, an Ordinance of the City Council of the City of Rocklin Adding Chapter 2.68 to the Rocklin Municipal Code Establishing Campaign Contribution Regulations.

FUTURE AGENDA ITEMS

ADJOURNMENT

City Council Staff Report

Subject: Minutes of the February 4, 2025 Special Joint Meeting of the City Council and Planning Commission

Date: February 25, 2025

Submitted By: Avinta Singh, City Clerk

Department: City Clerk's Office

Recommendation:
Approve the Minutes of the February 4, 2025 Special Joint Meeting of the City Council and Planning Commission

ATTACHMENTS:
1. DRAFT Joint City Council - Planning Commission Special Meeting Minutes of February 4, 2025

ROCKLIN CITY COUNCIL

Joint City Council &
Planning Commission Special Meeting
City Hall - Council Chambers
3970 Rocklin Rd. Rocklin, CA 95677
Website: www.rocklin.ca.us

February 4, 2025
General Session 5:00 p.m.

MEETING MINUTES
-DRAFT-

CALL TO ORDER

Mayor Gayaldo called the meeting to order at 5:00 p.m.

PLEDGE OF ALLEGIANCE

Mayor Gayaldo led the pledge of allegiance.

ROLL CALL

Present: Councilmembers David Bass, Ken Broadway, Greg Janda
Mayor Jill Gayaldo
Commissioners Twiana Armstrong, Roberto Cortez, Gregg McKenzie, Jared Thomas
Chair Michael Barron

Absent: Councilmember Bill Halldin

AGENDA REVIEW

None.

CITIZENS ADDRESSING THE CITY COUNCIL

There were none.

DISCUSSION ITEM

D1. Zoning Ordinance Update

Action: Received a presentation regarding the City of Rocklin Comprehensive Zoning Ordinance and Zoning Map Update Project (ZONE Rocklin), Discussed the Recommendations Memo, and Provided Feedback.

Assistant City Manager Andrews Keys opened the workshop. Senior Planner Nathan Anderson introduced the item and stated that the discussion about the Zone Rocklin project provided an opportunity to receive initial feedback from the City Council, Planning Commission, and members of the public, noting that some feedback had already been received based on outreach done with stakeholders.

Martha Miller with Miller Planning Associates presented the item, and staff and Ms. Miller responded to Councilmember and Commissioner questions.

PUBLIC COMMENT

Mr. Jerry Mitchell Jerry Mitchell addressed the City Council and Planning Commission regarding the item, appreciating the sensitivity being given to parking.

Mr. Kevin Shaw addressed the City Council and Planning Commission regarding the item urging careful consideration when reviewing sites for projects, supported homes on bigger lot sizes, preferred achieving homes over condominiums.

City Council and Planning Commission comments and discussion followed.

FUTURE AGENDA ITEMS

There were none.

ADJOURNMENT

Mayor Gayaldo adjourned the meeting at 6:31 p.m.

This is to certify that the foregoing is a true and correct copy of the minutes of February 4, 2025 as approved by the Rocklin City Council.

_____

Avinta Singh, City Clerk

City Council Staff Report

Subject: Minutes of the February 11, 2025 Regular Meeting of the City Council

Date: February 25, 2025

Submitted By: Avinta Singh, City Clerk

Department: City Clerk's Office

Recommendation:
Approve the Minutes of the February 11, 2025 Regular Meeting of the City Council.

ATTACHMENTS:
1. Draft City Council Meeting Minutes of February 11, 2025

ROCKLIN CITY COUNCIL

City Council Regular Meeting
City Hall - Council Chambers
3970 Rocklin Rd. Rocklin, CA 95677
Website: www.rocklin.ca.us

February 11, 2025
General Session 6:00 p.m.

MEETING MINUTES
-DRAFT-

CALL TO ORDER

Mayor Gayaldo called the meeting to order at 6:00 p.m.

PLEDGE OF ALLEGIANCE

The Rocklin Cub Scout Troop 102 Webelos led the pledge of allegiance.

ROLL CALL

Present: Councilmembers David Bass, Ken Broadway, Bill Halldin, Greg Janda
Mayor Jill Gayaldo
Absent: None

AGENDA REVIEW

None.

CITIZENS ADDRESSING THE CITY COUNCIL

There were none.

REPORTS FROM CITY COUNCIL AND CITY MANAGER

Council Member Broadway reported attendance at the Placer County Consolidated Oversight Board meeting which included an annual presentation on Rocklin's Successor Agency Recognized Obligation Payment Schedule and Administrative Budget; participated in mock interviews with Victory High School students; and shared that the City Council and Planning Commission held a joint special meeting on February 4, 2025 regarding ZONE Rocklin.

Vice Mayor Bass reported attendance at the Placer County Flood Control Board meeting, attended a fundraiser for the Rocklin Community Theater, and recognized local talent Emersyn Hunt for winning a Broadway contest called Next on Stage.

Council Member Halldin reported attendance at the Western Placer Waste Management Authority meeting (WPWMA), shared that Sierra College would be purchasing 50 acres from the WPWMA and constructing a public safety training center, and confirmed that WPWMA offered a free mattress recycling program.

Mayor Gayaldo stated that she had the opportunity to speak to Cub Scout Troop 102 Webelos sharing what the City Council's duties were; shared she met with South Placer Municipal Utility District's (SPMUD) new General Manager; attended the Women in Transportation awards event in Sacramento; attended a presentation at Whitney High School about mental health and the dangers of fentanyl; spoke about a Buddy Bench Program that had been initiated at Valley View Elementary School; reported attendance at a BIA meeting; shared that the Greater Sacramento Economic Council would be delivering a presentation in the near future; shared that Sierra College's first Megatronics class would be graduating; and noted that Sierra College was holding their new athletic facility dedication today.

City Manager Zimmermann shared that an upcoming 2x2 meeting had been scheduled with members of the SPMUD Board of Directors, and reminded all that City facilities would be closed Monday, February 17, 2025 in observance of President's Day

CONSENT CALENDAR

C1. Minutes of the January 28, 2025 Regular Meeting of the City Council
Action: Approved the Minutes of the January 28, 2025 Regular Meeting of the City Council.

C2. Transportation Development Fund Claims
Action: Adopted Resolution 2025-020 of the City Council of the City of Rocklin Authorizing the City Manager to Submit Claims for Local Transportation and State Transit Assistance Funds.

C3. Amendment to Consultant Services Agreement with Data Ticket, Inc.
Action: Adopted Resolution 2025-021 of the City Council of the City of Rocklin Approving and Authorizing the City Manager to Execute Amendment No. 1 to the Consultant Services Agreement with Data Ticket, Inc.

C4. Assignment of Grazing Services Agreement
Action: Adopted Resolution 2025-022 of the City Council of the City of Rocklin Authorizing the Assignment of the 2024 Grazing Project Contract for Services from Blue Tent Farms, LLC to Ecosystem Concepts, Inc. and Authorizing the City Manager to Execute an Assignment Agreement with Ecosystem Concepts, Inc.

PUBLIC COMMENT

There were none.

Motion to approve Consent Calendar Item Nos. C1 through C4 by Council Member Broadway and seconded by Vice Mayor Bass. Passed by the following vote:

Ayes:	Councilmembers Bass, Broadway, Janda, Halldin Mayor Gayaldo
Noes:	None
Absent:	None
Abstain:	None

PUBLIC HEARING

PH1. West Rocklin Annexation Area Pre-Zoning / PZ2024-0001
Action: Conducted a Public Hearing and Considered the Following Action:
Introduced, Waived the Full Reading and Read by Title Only, an Ordinance of the City Council of the City of Rocklin Approving a Zoning Ordinance Amendment to Pre-Zone Two Parcels within the West Rocklin Annexation Area (West Rocklin Annexation Area Pre-Zoning/PZ2024-0001).

Principal Planner Anna Leanza presented the item to the City Council.

PUBLIC COMMENT

There were none.

Motion to approve Public Hearing Item PH1 by Council Member Broadway and seconded by Vice Mayor Bass. Passed by the following vote:

Ayes:	Councilmembers Bass, Broadway, Janda, Halldin Mayor Gayaldo
Noes:	None
Absent:	None
Abstain:	None

FUTURE AGENDA ITEMS

There were none.

ADJOURNMENT

Mayor Gayaldo adjourned the meeting at 6:20pm and expressed her appreciation to the Rocklin Police Department for solving a high profile crime.

This is to certify that the foregoing is a true and correct copy of the minutes of February 11, 2025 as approved by the Rocklin City Council.

_____

Avinta Singh, City Clerk

City Council Staff Report

Subject: Amendments to the West Rocklin Annexation Area Pre-Zoning / PC2024-0001 (Second Reading of Ordinance)

Date: February 25, 2025

Submitted By: Avinta Singh, City Clerk

Department: City Clerk's Office

Recommendation:
Adopt an Ordinance of the City Council of the City of Rocklin Approving a Zoning Ordinance Amendment to Pre-Zone Two Parcels within the West Rocklin Annexation Area (West Rocklin Annexation Area Pre-Zoning PZ2024-0001).

Background:
On February 11, 2025, the City Council introduced, read by title only and waived the full reading of the following:

"An Ordinance of the City Council of the City of Rocklin Approving a Zoning Ordinance Amendment to Pre-Zone Two Parcels within the West Rocklin Annexation Area (West Rocklin Annexation Area Pre-Zoning PZ2024-0001)."

The background materials for this item are contained in the February 11, 2025 City Council Meeting Staff Report, located on the City's Website.

ATTACHMENTS:
1. Ordinance

ORDINANCE NO. XXXX

AN ORDINANCE OF THE CITY COUNCIL OF THE CITY OF ROCKLIN APPROVING A ZONING ORDINANCE AMENDMENT TO PRE-ZONE TWO PARCELS WITHIN THE WEST ROCKLIN ANNEXATION AREA (West Rocklin Annexation Area Pre-Zoning/PZ2024-0001)

The City Council of the City of Rocklin finds and determines that:

Section 1. Purpose. The purpose of this ordinance is to amend the Zoning Map to pre-zone Assessor's Parcel Number 365-020-076 (Parcel 1) to Planned Development 24 units per acre minimum (PD-24+) and Open Space (OS), and Assessor's Parcel Number 017-276-003 (Parcel 2) to Planned Development Business Professional/Commercial (PD-BP/C) and Open Space (OS).

Section 2. Authority. The City Council enacts this ordinance under the authority granted to cities by Article XI, Section 7 of the California Constitution and Government Code section 37100.

Section 3. Findings.

A. The proposed pre-zone would apply zones of Planned Development Residential, 24 dwelling units per acre minimum (PD-24+) and Open Space (OS) to a 3.4-acre site (Parcel 1, APN 365-020-076), consistent with the General Plan land use designations of High Density Residential and Recreation/Conservation for the parcel, and zones of Planned Development Business Professional/Commercial (PD-BP/C) and Open Space (OS) to a 2.9-acre parcel (Parcel 2, APN 017-276-003), consistent with the General Plan land use designations of Business Professional and Open Space for the parcel.

B. The City Zoning Map will be amended to reflect the new zoning of the sites.

C. The proposed Prezone is consistent with and implements the policies of the City of Rocklin's General Plan, including the Housing Element.

D. The land uses and their densities allowed in the proposed Prezone are not likely to create serious health problems or create nuisances on properties in the vicinity.

E. The City Council has considered the effect of the proposed Prezone on the housing needs of the region and has balanced those needs against the public service needs of its residents and available fiscal and environmental resources.

F. The area is physically suited to the uses authorized in the proposed general development plan and zoning.

G. The proposed Prezone is compatible with the land uses existing and permitted on the properties in the vicinity.

Section 4. Environmental Review. The Mitigated Negative Declaration (MND) prepared for the West Oaks Apartments project, consistent with the requirements of the California Environmental Quality Act (CEQA), and approved by City Council on January 23, 2024 by Resolution No. 2024-036, included Parcel 1 in the study area and the environmental analysis. The Environmental Impact Report (EIR) prepared for the 2012 General Plan Update, consistent with the requirements of CEQA, and approved by the City Council on October 10, 2012 by Resolution No. 2012-170, adequately considered any potential impacts resulting from future development of Parcel 2. As such, no additional environmental review is necessary.

Section 5. Amendments to the Zoning Map. The City Council hereby approves of the amendments to City of Rocklin Zoning Map, as provided in Exhibit A, attached hereto and incorporated by reference herein.

Section 6. Severability. If any section, sub-section, sentence, clause, phrase or portion of this Ordinance is for any reason held to be invalid or unconstitutional by the decision of any court of competent jurisdiction, such decision shall not affect the validity of the remaining portions of the Ordinance. City Council hereby declares that it would have adopted the Ordinance and each section, sub-section, sentence, clause, phrase or portion thereof, irrespective of the fact that any one or more sections, sub-sections, sentences, clauses, phrases or portions be declared invalid or unconstitutional.

Section 7. Effective Date. This ordinance shall take effect thirty (30) days after the date of its adoption, subject to Placer County Local Agency Formation Commission's (LAFCO) approval of the annexation of the parcels.

Section 8. Publication. Within 15 days of the passage of this ordinance, the City Clerk shall cause the full text of the ordinance, with the names of those City Councilmembers voting for and against the ordinance, to be published in the Placer Herald. In lieu of publishing the full text of the ordinance, the City Clerk, if so directed by the City Attorney and within 15 days, shall cause a summary of the ordinance, prepared by the City Attorney and with the names of the City Councilmembers voting for and against the ordinance, to be published in the Placer Herald, and shall post in the office of the City Clerk a certified copy of the full text of the ordinance, along with the names of those City Councilmembers voting for and against the ordinance. The publication of a summary of the ordinance in lieu of the full text of the ordinance is authorized only where the requirements of Government Code section 36933(c)(1) are met.

INTRODUCED at a regular meeting of the City Council of the City of Rocklin held on February 11, 2025, by the following vote:

AYES: Councilmembers: Bass, Broadway, Gayaldo, Halldin, Janda

NOES: None

ABSENT: None

ABSTAIN: None

PASSED AND ADOPTED at a regular meeting of the City Council of the City of Rocklin held on February 25, 2025, by the following vote:

AYES: Councilmembers:

NOES: Councilmembers:

ABSENT: Councilmembers:

ABSTAIN: Councilmembers:

_____
Jill Gayaldo, Mayor

ATTEST:

_____
Avinta Singh, City Clerk

First Reading: 02/11/2025
Second Reading: 02/25/2025
Effective Date:

Exhibit A: Prezone Diagram for APN 365-020-076

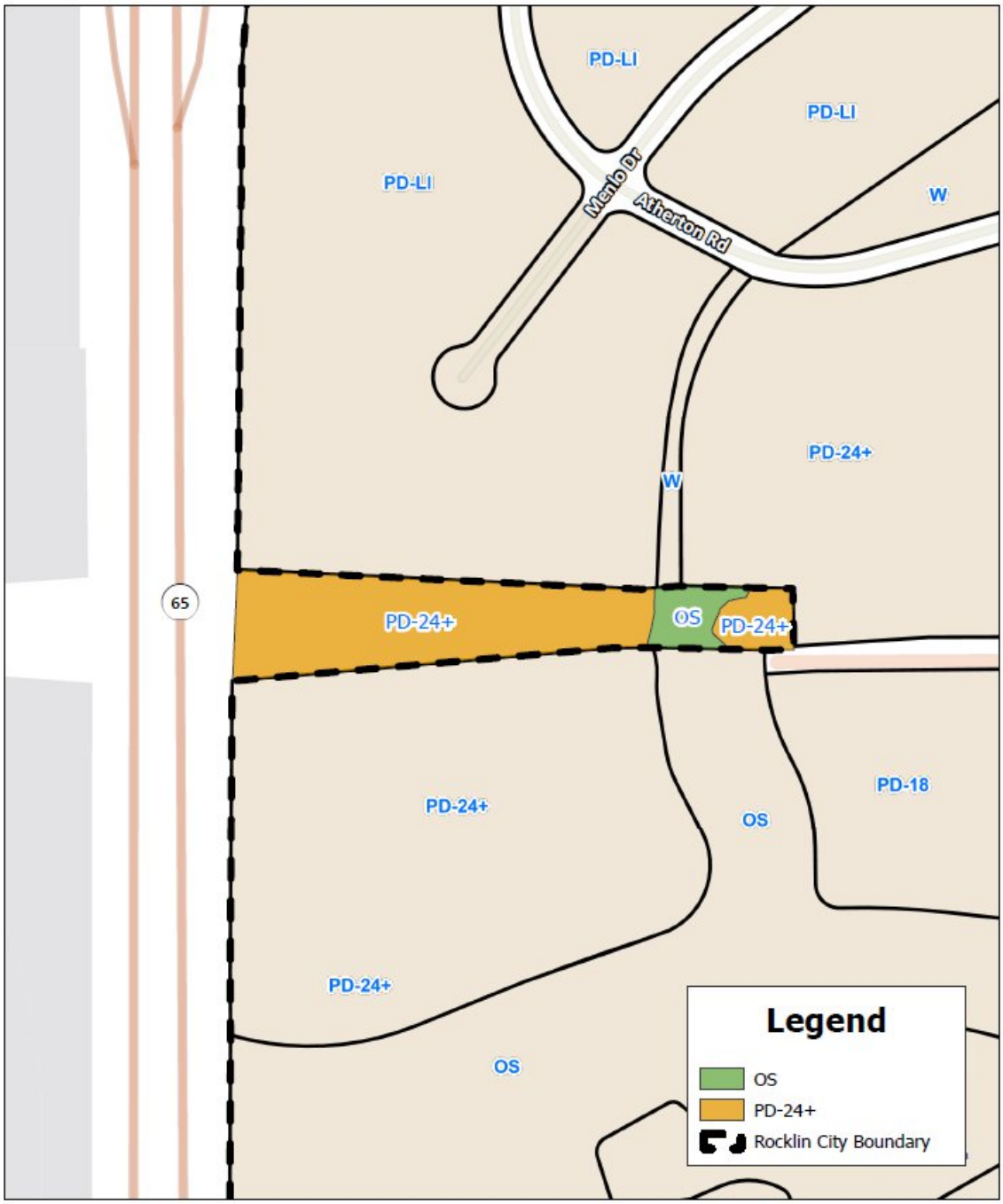

Exhibit A: Prezone Diagram for APN 017-276-003

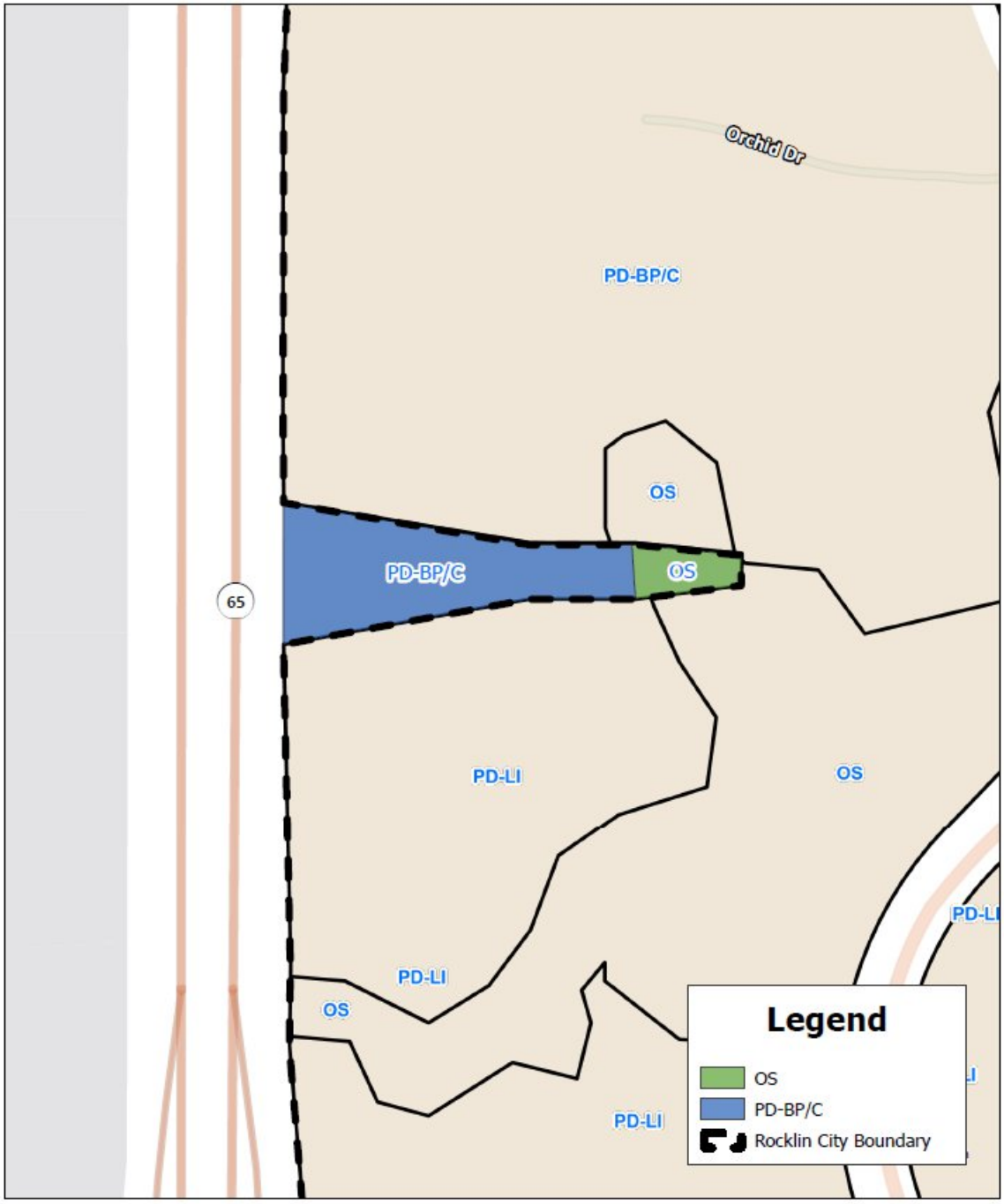

ROCKLIN
CALIFORNIA

City Council Staff Report

Subject: National Opioid Litigation Settlement with Kroger Co.

Date: February 25, 2025

Submitted By: Elizabeth Sorg, Management Analyst
Andrew Keys, Assistant City Manager

Department: City Manager's Office

Recommendation:
Adopt a Resolution of the City Council of the City of Rocklin Approving Participation in Settlement of National Opioid Litigation with Kroger Co; Appointing the City Manager as the City's Authorized Representative, and Authorizing the City Manager to Take all Reasonable and Necessary Actions.

Background:
On March 22, 2024, a nationwide settlement agreement (Settlement) was reached that resolves the legal claims of states and local political subdivisions against regional supermarket pharmacy Kroger Co. related to alleged opioid misconduct that contributed to the opioid epidemic. Approximately $1.2 billion from the Settlement will be used by participating states and subdivisions to remediate and abate the impacts of the opioid crisis. Depending on participation by states and subdivisions, the Settlement requires payments over eleven years after its effective date.

The California Department of Justice, Office of the Attorney General (OAG) has engaged all cities in the State, encouraging participation in the Settlement. According to the OAG, the settlement would resolve opioid litigation brought by states and local political subdivisions against Kroger Co. Similar to the prior national opioid settlement, the amount the State of California receives is dependent upon how many states and eligible subdivisions join the settlements.

Eligible subdivisions within each state decide whether to participate in each settlement, including acceptance of any applicable state-subdivision agreement. The California State Subdivision Agreement provides the framework for how the funds from the settlements may be distributed, allocated, and spent in California. Pursuant to that Agreement, funds received by the State of California will be divided into three funds.

1. State fund 15%;
2. California subdivision fund 15%; and
3. California abatement accounts fund 70%.

If the City does not opt in, the City's allocation will be paid to Placer County. The settlements require the funds to be used primarily for opioid abatement. The list of approved uses is included in Attachment 2, and includes the following:

- Expanded training and increased distribution of Naloxone or other FDA-approved drug to reverse opioid overdoses;
- Medication-Assisted Treatment distribution and other opioid-related treatment; specific services for pregnant and postpartum women;
- Expanding treatment for neonatal abstinence syndrome;
- Expansion of warm hand-off programs and recovery services;
- Treatment for incarcerated population;
- Prevention programs; and
- Expanding syringe service programs.

In addition, pursuant to the California State Subdivision Agreement, no less than 50 percent of the funds must be used for one or more of the following identified High Impact Abatement Activities:

- Provision of matching funds or operating costs for substance use disorder facilities within the Behavioral Health Continuum Infrastructure Program;
- Creating new or expanded Substance Use Disorder (SUD) Treatment infrastructure;
- Addressing the needs of communities of color and vulnerable populations that are disproportionately impacted by SUD;
- Diversion of people with SUD from the justice system into treatment; and/or
- Interventions to prevent drug addiction in vulnerable youth.

The recommended action to approve participation in the settlement agreement allows the City to receive funds from the settlement. It does not obligate the City to any specific program or use of funds at this time. However, funds must be used in compliance with the proposed Subdivision Settlement Agreement (Attachment 2).

Fiscal Impact:
There is no direct fiscal impact on the City's General Fund by participating in the Settlement Agreement. By opting to participate in the Settlement the City would be entitled to receive a portion of settlement funding for opioid abatement activities.

ATTACHMENTS:
1. Resolution
2. Proposed California State-Subdivision Settlement Agreement

RESOLUTION NO. 2025-

RESOLUTION OF THE CITY COUNCIL OF THE CITY OF ROCKLIN APPROVING PARTICIPATION IN SETTLEMENT OF NATIONAL OPIOID LITIGATION WITH KROGER CO; APPOINTING THE CITY MANAGER AS THE CITY'S AUTHORIZED REPRESENTATIVE; AND AUTHORIZING THE CITY MANAGER TO TAKE ALL REASONABLE AND NECESSARY ACTIONS

WHEREAS, certain state and local subdivisions filed suit against pharmaceutical manufacturers and pharmacies seeking damages and injunctive relief arising from opioid use; and

WHEREAS, representatives of litigating state and local subdivisions reached settlement agreements with Kroger Co.; and

WHEREAS, pursuant to the terms of the settlement agreements, state and eligible local subdivisions must "opt-in" to the settlements; and

WHEREAS, if the City of Rocklin elects to participate in the settlements, the City may receive monetary payments to fund opioid abatement costs, as defined; and

WHEREAS, the City Council finds that receiving settlement funds is in the public's interest, health, and welfare by promoting, providing and maintaining intervention, treatment, education, and recovery services to combat opioid misuse.

NOW, THEREFORE, BE IT RESOLVED by the City Council of the City of Rocklin as follows:

Section 1. The recitals set forth above are true and correct.

Section 2. The City Council hereby approves and elects to "opt-in" to the settlements with distributor Kroger Co.

Section 3. The City Council hereby appoints the City Manager as the City's authorized Representative and authorizes the City Manager to take all necessary and reasonable actions to effectuate the City's participation in the settlements and sign all necessary agreements.

PASSED AND ADOPTED this 25th day of February, 2025, by the following vote:

AYES: Councilmembers:
NOES: Councilmembers:
ABSENT: Councilmembers:
ABSTAIN: Councilmembers:

_____
Jill Gayaldo, Mayor

ATTEST:

_____
Avinta Singh, City Clerk

Proposed California State-Subdivision Agreement
Regarding Distribution and Use of
Settlement Funds – Kroger Settlement

1. Introduction

Pursuant to the Kroger Settlement Agreement, dated as of March 22, 2024, and any revision thereto as well as any modification thereto entered into by the State of California and Kroger (the "Kroger Settlement Agreement"), including Section V and Exhibit O, the State of California proposes this agreement (the "CA Kroger Allocation Agreement") to govern the allocation, distribution, and use of Settlement Fund payments made to California pursuant to Sections IV and V of the Kroger Settlement Agreement. For the avoidance of doubt, this agreement does not apply to payments made pursuant to Section IX of the Kroger Settlement Agreement.

Pursuant to Exhibit O, Paragraph 4, of the Kroger Settlement Agreement, acceptance of this CA Kroger Allocation Agreement is a requirement to be an Initial Participating Subdivision.

2. Definitions

a) *CA Participating Subdivision* means a Participating Subdivision that is also (a) a Plaintiff Subdivision and/or (b) a Primary Subdivision with a population equal to or greater than 10,000. For the avoidance of doubt, eligible CA Participating Subdivisions are those California subdivisions listed in Exhibit C (excluding Litigating Special Districts) and/or Exhibit I to the Kroger Settlement Agreement.

b) *Allergan Settlement Agreement* means the Allergan Settlement Agreement dated November 22, 2022, and any revision thereto.

c) *CVS Settlement Agreement* means the CVS Settlement Agreement dated December 9, 2022, and any revision thereto as well as any modification thereto entered into by the State of California and CVS.

d) *Distributor Settlement Agreement* means the Distributor Settlement Agreement dated July 21, 2021, and any revision thereto.

e) *Janssen Settlement Agreement* means the Janssen Settlement Agreement dated July 21, 2021, and any revision thereto.

f) *Teva Settlement Agreement* means the Teva Settlement Agreement dated November 22, 2022, and any revision thereto.

g) *Walgreens Settlement Agreement* means the Walgreens Settlement Agreement dated December 9, 2022, and any revision thereto.

h) *Walmart Settlement Agreement* means the Walmart Settlement Agreement dated November 14, 2022, and any revision thereto.

i) *CA Litigating Special District* means a Litigating Special District located in California. CA Litigating Special Districts include Downey Unified School District,

Elk Grove Unified School District, Kern High School District, Montezuma Fire Protection District (located in Stockton, California), Santa Barbara San Luis Obispo Regional Health Authority, Inland Empire Health Plan, Health Plan of San Joaquin, San Leandro Unified School District, Pleasant Valley School District Board, and LA Care Health Plan.

j) *Plaintiff Subdivision* means a Subdivision located in California, other than a CA Litigating Special District, that filed a lawsuit, on behalf of the Subdivision and/or through an official of the Subdivision on behalf of the People of the State of California, against one or more Opioid Defendants prior to October 1, 2020.

k) *Opioid Defendant* means any defendant (including but not limited to Kroger Co., Walgreen Co., Teva Pharmaceutical Industries Ltd., Allergan Finance, LLC, Allergan Limited, CVS Health Corporation, CVS Pharmacy, Inc., Walmart Inc., Johnson & Johnson, Janssen Pharmaceuticals, Inc., Purdue Pharma L.P., Cardinal Health, Inc., AmerisourceBergen Corporation, and McKesson Corporation) named in a lawsuit seeking damages, abatement, or other remedies related to or caused by the opioid public health crisis in any lawsuit brought by any state or local government on or before October 1, 2020.

3. General Terms

This agreement is subject to the requirements of the Kroger Settlement Agreement, as well as applicable law, and the Kroger Settlement Agreement governs over any inconsistent provision of this CA Kroger Allocation Agreement. Terms used in this CA Kroger Allocation Agreement have the same meaning as in the Kroger Settlement Agreement unless otherwise defined herein.

Pursuant to Section V(D)(1) of the Kroger Settlement Agreement, (a) all Settlement Fund payments will be used for Opioid Remediation, except as allowed by Section V(B)(2) of the Kroger Settlement Agreement; and (b) at least seventy percent (70%) of Settlement Fund payment amounts will be used solely for future Opioid Remediation.

4. State Allocation

The Settlement Fund payments to California,[1] pursuant to the Kroger Settlement Agreement, shall be allocated as follows: 15% to the State Fund; 70% to the Abatement Accounts Fund; and 15% to the Subdivision Fund. For the avoidance of doubt, all funds allocated to California from the Settlement Fund shall be combined pursuant to this CA Kroger Allocation Agreement, and 15% of that total shall be allocated to the State of California (the "State of California Allocation"), 70% to the California Abatement Accounts Fund ("CA Abatement Accounts Fund"), and 15% to the California Subdivision Fund ("CA Subdivision Fund").

[1] For purposes of clarity, use of the term "California" refers to the geographic territory of California and the state and its local governments therein. The term "State" or "State of California" refers to the State of California as a governmental unit.

A. State of California Allocation

Fifteen percent of the total Settlement Fund payments will be allocated to the State and used by the State for future Opioid Remediation.

B. CA Abatement Accounts Fund

i. Allocation of CA Abatement Accounts Funds

a) Seventy percent of the total Settlement Fund payments will be allocated to the CA Abatement Accounts Fund. The funds in the CA Abatement Accounts Fund will be allocated based on the allocation model developed in connection with the proposed negotiating class in the National Prescription Opiate Litigation (MDL No. 2804), as adjusted to reflect only those cities and counties that are eligible, based on population or litigation status, to become a CA Participating Subdivision. The percentage from the CA Abatement Accounts Fund allocated to each CA Participating Subdivision is set forth in Appendix 1 in the column entitled abatement percentage (the "Local Allocation"). For the avoidance of doubt, CA Litigating Special Districts and California towns, cities, and counties with a population less than 10,000 are not eligible to receive an allocation of CA Abatement Accounts Funds.

b) A CA Participating Subdivision that is a county, or a city and county, will be allocated its Local Allocation share as of the date on which it becomes a Participating Subdivision, and will receive payments as provided in the Kroger Settlement Agreement.

c) A CA Participating Subdivision that is a city will be allocated its Local Allocation share as of the date on which it becomes a Participating Subdivision. The Local Allocation share for a city that is a CA Participating Subdivision will be paid to the county in which the city is located, rather than to the city, so long as: (a) the county is a CA Participating Subdivision, and (b) the city did not elect to receive its share of funds in the National Opioids Settlement with Distributors AmerisourceBergenCorporation, Cardinal Health, Inc., and McKesson Corporation (the "Distributors Settlement"). If a city later changes or has already changed its distribution election in the Distributors Settlement, that change in election will apply here, provided that the change in election is received by the settlement administrator at least 60 days prior to a Payment Date. A Local Allocation share allocated to a city but paid to a county is not required to be spent exclusively for abatement activities in that city, but will become part of the county's share of the CA Abatement Accounts Funds, which will be used in accordance with Section 4.B.ii (Use of CA Abatement Accounts Funds) and reported on in accordance with Section 4.B.iii (CA Abatement Accounts Fund Oversight).

d) A city within a county that is a CA Participating Subdivision may opt in or out of direct payment at any time, and it may also elect direct payment of only a portion of its share, with the remainder going to the county, by providing notice to the Settlement Fund Administrator at least 60 days prior to a Payment Date. For purposes of this CA Kroger Allocation Agreement, the Cities of Los Angeles, Oakland, San Diego, San Jose and

Eureka will be deemed to have elected direct payment if they become Participating Subdivisions.

e) The State will receive the Local Allocation share of any payment to the Settlement Fund that is attributable to a county or city that is eligible to become a CA Participating Subdivision, but that has not, as of the date of that payment to the Settlement Fund, become a Participating Subdivision.

f) Funds received by a CA Participating Subdivision, and not expended or encumbered within five years of receipt and in accordance with the Kroger Settlement Agreement and this CA Kroger Allocation Agreement shall be transferred to the State; provided however, that CA Participating Subdivisions have seven years to expend or encumber CA Abatement Accounts Funds designated to support capital outlay projects before they must be transferred to the State. This provision shall not apply to the Cost Reimbursement Funds, which shall be controlled by Appendix 2.

ii. Use of CA Abatement Accounts Funds

a) The CA Abatement Accounts Funds will be used for future Opioid Remediation in one or more of the areas described in the List of Opioid Remediation Uses, which is Exhibit E to the Kroger Settlement Agreement.

b) In addition to this requirement, no less than 50% of the funds received by a CA Participating Subdivision from the Abatement Accounts Fund in each calendar year will be used for one or more of the following High Impact Abatement Activities:

(1) the provision of matching funds or operating costs for substance use disorder facilities within the Behavioral Health Continuum Infrastructure Program;

(2) creating new or expanded Substance Use Disorder ("SUD") treatment infrastructure;

(3) addressing the needs of communities of color and vulnerable populations (including sheltered and unsheltered homeless populations) that are disproportionately impacted by SUD;

(4) diversion of people with SUD from the justice system into treatment, including by providing training and resources to first and early responders (sworn and non-sworn) and implementing best practices for outreach, diversion and deflection, employability, restorative justice, and harm reduction;

(5) interventions to prevent drug addiction in vulnerable youth, including but not limited to, youth in foster care, juvenile justice-impacted youth, youth experiencing adversities related to socioeconomic status, and unhoused youth; and/or

(6) the purchase of naloxone for distribution and efforts to expand access to naloxone for opioid overdose reversals.

c) The California Department of Health Care Services ("DHCS") may add to this list (but not delete from it) by designating additional High Impact Abatement Activities. DHCS will make reasonable efforts to consult with stakeholders, including the CA Participating Subdivisions, before adding additional High Impact Abatement Activities to this list.

d) For the avoidance of doubt, and subject to the requirements of the Kroger Settlement Agreement and applicable law, CA Participating Subdivisions may form agreements or ventures, or otherwise work in collaboration with, federal, state, local, tribal or private sector entities in pursuing Opioid Remediation activities funded from the CA Abatement Accounts Fund. Further, provided that all CA Abatement Accounts Funds are used for Opioid Remediation consistent with the Kroger Settlement Agreement and this CA Kroger Allocation Agreement, a county and any cities or towns within the county may agree to reallocate their respective shares of the CA Abatement Accounts Funds among themselves, provided that any direct distribution may only be to a CA Participating Subdivision and any CA Participating Subdivision must agree to their share being reallocated.

iii. CA Abatement Accounts Fund Oversight

a) Pursuant to Section 5 below, CA Participating Subdivisions receiving settlement funds must prepare and file reports annually regarding the use of those funds. DHCS may regularly review the reports prepared by CA Participating Subdivisions about the use of CA Abatement Accounts Funds for compliance with the Kroger Settlement Agreement and this CA Kroger Allocation Agreement.

b) If DHCS determines that a CA Participating Subdivision's use of CA Abatement Accounts Funds is inconsistent with the Kroger Settlement Agreement or this CA Kroger Allocation Agreement, whether through review of reports or information from any other sources, DHCS shall send a request to meet and confer with the CA Participating Subdivision. The parties shall meet and confer in an effort to resolve the concern.

c) If the parties are unable to reach a resolution, DHCS may conduct an audit of the Subdivision's use of the CA Abatement Accounts Funds within one year of the request to meet and confer, unless the parties mutually agree in writing to extend the meet and confer time frame.

d) If the concern still cannot be resolved, the State may bring a motion or action in the court where the State has filed its Consent Judgment to resolve the concern or otherwise enforce the requirements of the Kroger Settlement Agreement or this CA Kroger Allocation Agreement. However, in no case shall any audit be conducted, or motion be brought, as to a specific expenditure of funds, more than five years after the date on which the expenditure of the funds was reported to DHCS, in accordance with this agreement.

e) Notwithstanding the foregoing, this Agreement does not limit the statutory or constitutional authority of any state or local agency or official to conduct audits, investigations, or other oversight activities, or to pursue administrative, civil, or criminal enforcement actions.

C. CA Subdivision Fund

i. Fifteen percent of the total Settlement Fund payments will be allocated to the CA Subdivision Fund. All funds in the CA Subdivision Fund will be allocated among the Plaintiff Subdivisions that are Initial Participating Subdivisions. The funds will be used, subject to any limits imposed by the Kroger Settlement Agreement and this CA Kroger Allocation Agreement, to fund future Opioid Remediation and reimburse past opioid-related expenses, which may include fees and expenses related to litigation, and to pay the reasonable fees and expenses of the Special Master as set forth in Appendix 2.

The CA Subdivision Funds will be allocated as follows:

a) First, funds in the CA Subdivision Fund shall be used to pay the Special Master's reasonable fees and expenses in accordance with the procedures and limitations set forth in Appendix 2 to this document;

b) Second, funds will be allocated to Plaintiff Subdivisions that are Initial Participating Subdivisions that have been awarded Costs, as defined by and in accordance with the procedures and limitations set forth in Appendix 2 to this document.

c) Funds remaining in the CA Subdivision Fund, which shall consist of no less than 50% of the total CA Subdivision Fund received in any year pursuant to Appendix 2, Section 2.c.v, will be distributed to Plaintiff Subdivisions that are Initial Participating Subdivisions, in relative proportion to the Local Allocation. These funds shall be used to fund future opioid-related projects and to reimburse past opioid-related expenses, which may include fees and expenses related to litigation against any Opioid Defendant.

D. Provision for State Back-Stop Agreement

On August 6, 2021, Judge Dan Polster of the U.S. District Court, Northern District of Ohio, Eastern Division, issued an order (ECF Docket Number 3814) ("MDL Fees Order") in the National Prescription Opiate Litigation (MDL No. 2804) "cap[ping] all applicable contingent fee agreements at 15%." Private counsel representing Plaintiff Subdivisions should seek its contingency fees and costs from the Attorney Fee Fund or Cost Funds under the Kroger Settlement Agreement, and, if applicable, the Teva Settlement Agreement, Allergan Settlement Agreement, CVS Settlement Agreement, Distributor Settlement Agreement, Janssen Settlement Agreement, and Walmart Settlement Agreement.

A Plaintiff Subdivision may separately agree to use its share of the CA Subdivision Fund to pay for fees or costs incurred by its contingency-fee counsel ("State Back-Stop Agreement"),

pursuant to Exhibit R, section I(CC), of the Kroger Settlement Agreement and the MDL Fees Order, so long as such contingency fees do not exceed a total contingency fee of 15% of the total gross recovery of the Plaintiff Subdivision pursuant to the Kroger Settlement, inclusive of contingency fees from the national Attorney Fee Fund and this State Back-Stop Agreement. Before seeking fees or litigation costs and expenses from a State Back-Stop Agreement, private counsel representing Plaintiff Subdivisions must first seek contingency fees and costs from the Attorney Fee Fund or Cost Funds created under the Kroger Settlement Agreement. Further, private counsel may only seek reimbursement for litigation fees and costs that have not previously been reimbursed through prior settlements or judgments.

To effectuate a State Back-Stop Agreement pursuant to this section, an agreement in the form of Appendix 3 may be entered into by a Plaintiff Subdivision, private counsel, and the California Office of the Attorney General. The California Office of the Attorney General shall, upon the request of a Plaintiff Subdivision, execute any agreement executed by a Plaintiff Subdivision and its private counsel if it is in the form of Appendix 3. The California Office of the Attorney General will also consider requests from Plaintiff Subdivisions to execute and enter into agreements presented in other forms.

For the avoidance of doubt, this agreement does not require a Plaintiff Subdivision to request or enter into a State Back-Stop Agreement, and no State Back-Stop Agreement shall impose any duty or obligation on the State of California or any of its agencies or officers, including without limitation the Attorney General.

5. State and Subdivision Reporting

a) DHCS will prepare an annual written report regarding the State's use of funds from the settlement until those funds are fully expended and for one year thereafter. These reports will be made publicly available on the DHCS web site.

b) Each CA Participating Subdivision that receives payments of funds from the settlement will prepare written reports at least annually regarding the use of those funds, until those funds are fully expended and for one year thereafter. These reports will also include a certification that all funds that the CA Participating Subdivision has received through the settlement have been used in compliance with the Kroger Settlement Agreement and this CA Kroger Allocation Agreement. The report will be in a form reasonably determined by DHCS. Prior to specifying the form of the report DHCS will confer with representatives of the Plaintiff Subdivisions.

c) The State and all CA Participating Subdivisions receiving CA Abatement Accounts Funds will track all deposits and expenditures. Each such subdivision is responsible solely for the CA Abatement Accounts Funds it receives. A county is not responsible for oversight, reporting, or monitoring of CA Abatement Accounts Funds received by a city within that county that receives direct payment. Unless otherwise exempt, Subdivisions' expenditures and uses of CA Abatement Accounts Funds and other Settlement Funds will be subject to the normal budgetary and expenditure process of the Subdivision.

d) Each Plaintiff Subdivision receiving CA Subdivision Funds will track all deposits and expenditures, as required by the Kroger Settlement Agreement and this CA Kroger Allocation Agreement. Among other things, Plaintiff Subdivisions using monies from the CA Subdivision Fund for purposes that do not qualify as Opioid Remediation must identify and include in their annual report, the amount and how such funds were used, including if used to pay attorneys' fees, investigation costs, or litigation costs. Pursuant to Section V(B)(2) of the Kroger Settlement Agreement, such information must also be reported to the Settlement Fund Administrator and Kroger.

e) In each year in which DHCS prepares an annual report DHCS will also host a meeting to discuss the annual report and the Opioid Remediation activities being carried out by the State and Participating Subdivisions.

6. Miscellaneous

a) The State or any CA Participating Subdivision may bring a motion or action in the court where the State has filed its Consent Judgment to enforce the requirements of this CA Kroger Allocation Agreement. Before filing such a motion or action the State will meet and confer with any CA Participating Subdivision that is the subject of the anticipated motion or action, and vice versa.

b) Except as provided in the Kroger Settlement Agreement, this CA Kroger Allocation Agreement is not enforceable by any party other than the State and the CA Participating Subdivisions. It does not confer any rights or remedies upon, and shall not be enforceable by, any third party.

c) Except as provided in the CA Kroger Allocation Agreement, if any provision of this agreement or the application thereof to any person, entity, or circumstance shall, to any extent, be invalid or unenforceable, the remainder of this agreement, or the application of such provision to persons, entities, or circumstances other than those as to which it is invalid or unenforceable, will not be affected thereby, and each other provision of this agreement will be valid and enforceable to the fullest extent permitted by law.

d) Except as provided in the Kroger Settlement Agreement, this agreement shall be governed by and interpreted in accordance with the laws of California.

The undersigned, Rocklin city, ACKNOWLEDGES acceptance of this Proposed California State-Subdivision Agreement Regarding Distribution and Use of Settlement Funds – Kroger Settlement is a requirement to be an Initial Participating Subdivision in the Kroger Settlement and ACCEPTS this Proposed California State-Subdivision Agreement Regarding Distribution and Use of Settlement Funds – Kroger Settlement. EXECUTED on .

Signature:

Name:

Title:

Date:

APPENDIX 1

DISCLAIMER: The allocation percentages herein are estimates only and should not be relied on for decisions regarding legal rights, releases, waivers, or other decisions affecting current or potential legal claims. Percentages shown in the Plaintiff Subdivision Percentage column may change pursuant to Section 4.C. of the California State-Subdivision Agreement Regarding Distribution and Use of Settlement Funds—Kroger Settlement, whereas the percentages shown in the Abatement Percentage column should not change. Participating Subdivisions, underlying calculations, and the calculated allocation percentages are subject to change. Regarding the column herein entitled "Abatement Percentage," pursuant to Section 4.B.e., the State of California will receive the Local Allocation share of any payment to the Settlement Fund that is attributable to a county or city that is eligible to become a CA Participating Subdivision, but that has not, as of the date of that payment to the Settlement Fund, become a Participating Subdivision. Regarding the column herein entitled "Plaintiff Subdivision Percentage," payments allocated to a Plaintiff Subdivision, which is not an Initial Participating Subdivision, will be re-allocated among the Plaintiff Subdivisions that are Initial Participating Subdivisions.

Regarding the column herein entitled "Abatement Percentage," the annotation of "100%" refers to one-hundred percent (100%) of the California Abatement Account Funds received, pursuant to Section 4.B. Regarding the column herein entitled "Plaintiff Subdivision Percentage," the annotation of "100%" refers to one-hundred percent (100%) of the California Subdivision Funds received, pursuant to Section 4.C. Regarding the column herein entitled "Weighted Allocation Percentage," the annotation of "100%" refers to one-hundred percent (100%) of the combined and weighted allocation of the Abatement Percentage and the Plaintiff Subdivision Percentage.

APPENDIX 1

			100.000%	100.000%	100.000%
Participating Subdivision Classification	**Participating Subdivision**	**County**	**Abatement Percentage**	**Plaintiff Subdivision Percentage**	**Weighted Allocation Percentage**
County	***Alameda County***	Alameda	2.332%	2.853%	**2.4237952%**
City	Alameda	Alameda	0.069%		**0.0570162%**
City	Albany	Alameda	0.013%		**0.0107768%**
City	Berkeley	Alameda	0.152%		**0.1249656%**
City	Dublin	Alameda	0.033%	0.040%	**0.0338810%**
City	Emeryville	Alameda	0.023%		**0.0185765%**
City	Fremont	Alameda	0.108%		**0.0888576%**
City	Hayward	Alameda	0.117%		**0.0966218%**
City	Livermore	Alameda	0.054%		**0.0446740%**
City	Newark	Alameda	0.026%		**0.0217626%**
City	Oakland	Alameda	0.486%	0.595%	**0.5055601%**
City	Piedmont	Alameda	0.014%		**0.0114064%**
City	Pleasanton	Alameda	0.067%		**0.0554547%**
City	San Leandro	Alameda	0.039%		**0.0321267%**
City	Union City	Alameda	0.043%		**0.0352484%**
County	***Amador County***	Amador	0.226%	0.277%	**0.2349885%**
County	***Butte County***	Butte	1.615%	1.975%	**1.6783178%**
City	Chico	Butte	0.216%	0.264%	**0.2246499%**
City	Oroville	Butte	0.079%		**0.0646595%**
County	***Calaveras County***	Calaveras	0.226%	0.277%	**0.2351644%**
County	***Colusa County***	Colusa	0.059%		**0.0489221%**
County	***Contra Costa County***	Contra Costa	2.102%	2.571%	**2.1844585%**
City	Antioch	Contra Costa	0.037%		**0.0301879%**
City	Brentwood	Contra Costa	0.026%		**0.0215339%**
City	Clayton	Contra Costa	0.002%		**0.0018060%**
City	Concord	Contra Costa	0.055%		**0.0456676%**
City	Danville	Contra Costa	0.010%		**0.0082255%**
City	El Cerrito	Contra Costa	0.023%		**0.0189024%**
City	Hercules	Contra Costa	0.010%		**0.0078273%**
Participating Subdivision Classification	**Participating Subdivision**	**County**	**Abatement Percentage**	**Plaintiff Subdivision Percentage**	**Weighted Allocation Percentage**
City	Lafayette	Contra Costa	0.006%		**0.0046030%**

City	Martinez	Contra Costa	0.012%		**0.0098593%**
City	Moraga	Contra Costa	0.004%		**0.0031007%**
City	Oakley	Contra Costa	0.010%		**0.0079416%**
City	Orinda	Contra Costa	0.005%		**0.0038157%**
City	Pinole	Contra Costa	0.013%		**0.0110909%**
City	Pittsburg	Contra Costa	0.053%		**0.0436369%**
City	Pleasant Hill	Contra Costa	0.013%		**0.0106309%**
City	Richmond	Contra Costa	0.146%		**0.1201444%**
City	San Pablo	Contra Costa	0.018%		**0.0148843%**
City	San Ramon	Contra Costa	0.021%		**0.0176459%**
City	Walnut Creek	Contra Costa	0.026%		**0.0212132%**
County	***Del Norte County***	Del Norte	0.114%	0.140%	**0.1189608%**
County	***El Dorado County***	El Dorado	0.768%	0.939%	**0.7980034%**
City	Placerville	El Dorado	0.015%		**0.0127642%**
City	South Lake Tahoe	El Dorado	0.081%		**0.0665456%**
County	***Fresno County***	Fresno	1.895%	2.318%	**1.9693410%**
City	Clovis	Fresno	0.065%		**0.0536211%**
City	Coalinga	Fresno	0.012%		**0.0098554%**
City	Fresno	Fresno	0.397%		**0.3270605%**
City	Kerman	Fresno	0.005%		**0.0042534%**
City	Kingsburg	Fresno	0.008%		**0.0066167%**
City	Mendota	Fresno	0.002%		**0.0019387%**
City	Orange Cove	Fresno	0.004%		**0.0035607%**
City	Parlier	Fresno	0.008%		**0.0069755%**
City	Reedley	Fresno	0.012%		**0.0098804%**
City	Sanger	Fresno	0.018%		**0.0146135%**
City	Selma	Fresno	0.015%		**0.0127537%**
County	***Glenn County***	Glenn	0.107%	0.131%	**0.1116978%**
County	***Humboldt County***	Humboldt	1.030%	1.260%	**1.0703185%**

Participating Subdivision Classification	Participating Subdivision	County	Abatement Percentage	Plaintiff Subdivision Percentage	Weighted Allocation Percentage
City	Arcata	Humboldt	0.054%		**0.0447660%**
City	Eureka	Humboldt	0.117%	0.143%	**0.1216284%**
City	Fortuna	Humboldt	0.032%		**0.0266837%**
County	***Imperial County***	Imperial	0.258%	0.315%	**0.2679006%**

City	Brawley	Imperial	0.011%		**0.0087986%**
City	Calexico	Imperial	0.019%		**0.0152799%**
City	El Centro	Imperial	0.158%		**0.1302522%**
City	Imperial	Imperial	0.006%		**0.0048791%**
County	***Inyo County***	Inyo	0.073%	0.089%	**0.0754413%**
County	***Kern County***	Kern	2.517%	3.079%	**2.6159145%**
City	Arvin	Kern	0.006%		**0.0046425%**
City	Bakersfield	Kern	0.212%		**0.1747198%**
City	California City	Kern	0.009%		**0.0070820%**
City	Delano	Kern	0.030%		**0.0249316%**
City	McFarland	Kern	0.003%		**0.0025644%**
City	Ridgecrest	Kern	0.015%		**0.0120938%**
City	Shafter	Kern	0.013%		**0.0103417%**
City	Tehachapi	Kern	0.009%		**0.0073580%**
City	Wasco	Kern	0.008%		**0.0069861%**
County	***Kings County***	Kings	0.293%		**0.2413469%**
City	Avenal	Kings	0.007%		**0.0056335%**
City	Corcoran	Kings	0.013%		**0.0107032%**
City	Hanford	Kings	0.027%		**0.0226038%**
City	Lemoore	Kings	0.016%		**0.0131900%**
County	***Lake County***	Lake	0.795%		**0.6545389%**
City	Clearlake	Lake	0.041%	0.050%	**0.0426253%**
City	Lakeport	Lake	0.021%	0.026%	**0.0222964%**
County	***Lassen County***	Lassen	0.319%	0.391%	**0.3320610%**
City	Susanville	Lassen	0.027%		**0.0219295%**
County	***Los Angeles County***	Los Angeles	13.896%	16.999%	**14.4437559%**

Participating Subdivision Classification	Participating Subdivision	County	Abatement Percentage	Plaintiff Subdivision Percentage	Weighted Allocation Percentage
City	Agoura Hills	Los Angeles	0.005%		**0.0040024%**
City	Alhambra	Los Angeles	0.042%		**0.0343309%**
City	Arcadia	Los Angeles	0.033%		**0.0267718%**
City	Artesia	Los Angeles	0.001%		**0.0005100%**
City	Azusa	Los Angeles	0.026%		**0.0210857%**
City	Baldwin Park	Los Angeles	0.027%		**0.0218520%**
City	Bell	Los Angeles	0.008%		**0.0068783%**

City	Bellflower	Los Angeles	0.002%		**0.0014485%**
City	Bell Gardens	Los Angeles	0.014%		**0.0114301%**
City	Beverly Hills	Los Angeles	0.065%		**0.0534897%**
City	Burbank	Los Angeles	0.100%		**0.0823132%**
City	Calabasas	Los Angeles	0.006%		**0.0048948%**
City	Carson	Los Angeles	0.019%		**0.0159805%**
City	Cerritos	Los Angeles	0.005%		**0.0039682%**
City	Claremont	Los Angeles	0.010%		**0.0082584%**
City	Commerce	Los Angeles	0.000%		**0.0002971%**
City	Compton	Los Angeles	0.044%		**0.0361882%**
City	Covina	Los Angeles	0.028%		**0.0229127%**
City	Cudahy	Los Angeles	0.001%		**0.0006020%**
City	Culver City	Los Angeles	0.055%		**0.0449894%**
City	Diamond Bar	Los Angeles	0.001%		**0.0006993%**
City	Downey	Los Angeles	0.052%		**0.0429994%**
City	Duarte	Los Angeles	0.003%		**0.0027261%**
City	El Monte	Los Angeles	0.031%	0.038%	**0.0318985%**
City	El Segundo	Los Angeles	0.033%		**0.0268020%**
City	Gardena	Los Angeles	0.034%		**0.0278088%**
City	Glendale	Los Angeles	0.166%		**0.1366586%**
City	Glendora	Los Angeles	0.016%		**0.0134411%**
City	Hawaiian Gardens	Los Angeles	0.005%		**0.0040549%**
City	Hawthorne	Los Angeles	0.050%		**0.0407833%**

Participating Subdivision Classification	Participating Subdivision	County	Abatement Percentage	Plaintiff Subdivision Percentage	Weighted Allocation Percentage
City	Hermosa Beach	Los Angeles	0.018%		**0.0145307%**
City	Huntington Park	Los Angeles	0.023%		**0.0190667%**
City	Inglewood	Los Angeles	0.059%		**0.0489195%**
City	La Cañada Flintridge	Los Angeles	0.003%		**0.0025565%**
City	Lakewood	Los Angeles	0.005%		**0.0039971%**
City	La Mirada	Los Angeles	0.010%		**0.0081572%**
City	Lancaster	Los Angeles	0.045%		**0.0369689%**
City	La Puente	Los Angeles	0.002%		**0.0012999%**
City	La Verne	Los Angeles	0.024%		**0.0194190%**
City	Lawndale	Los Angeles	0.002%		**0.0017731%**

City	Lomita	Los Angeles	0.004%		**0.0031940%**
City	Long Beach	Los Angeles	0.439%		**0.3614151%**
City	Los Angeles	Los Angeles	2.715%	3.321%	**2.8218811%**
City	Lynwood	Los Angeles	0.016%		**0.0134345%**
City	Malibu	Los Angeles	0.002%		**0.0019269%**
City	Manhattan Beach	Los Angeles	0.032%		**0.0260686%**
City	Maywood	Los Angeles	0.004%		**0.0035528%**
City	Monrovia	Los Angeles	0.031%		**0.0254455%**
City	Montebello	Los Angeles	0.030%		**0.0250670%**
City	Monterey Park	Los Angeles	0.031%		**0.0256677%**
City	Norwalk	Los Angeles	0.031%		**0.0258228%**
City	Palmdale	Los Angeles	0.046%		**0.0375827%**
City	Palos Verdes Estates	Los Angeles	0.006%		**0.0053102%**
City	Paramount	Los Angeles	0.011%		**0.0091483%**
City	Pasadena	Los Angeles	0.146%		**0.1200524%**
City	Pico Rivera	Los Angeles	0.022%		**0.0183333%**
City	Pomona	Los Angeles	0.111%		**0.0911933%**
City	Rancho Palos Verdes	Los Angeles	0.002%		**0.0012645%**
City	Redondo Beach	Los Angeles	0.062%		**0.0506992%**
City	Rosemead	Los Angeles	0.003%		**0.0028260%**

Participating Subdivision Classification	Participating Subdivision	County	Abatement Percentage	Plaintiff Subdivision Percentage	Weighted Allocation Percentage
City	San Dimas	Los Angeles	0.003%		**0.0022016%**
City	San Fernando	Los Angeles	0.013%		**0.0104837%**
City	San Gabriel	Los Angeles	0.018%		**0.0147726%**
City	San Marino	Los Angeles	0.009%		**0.0073791%**
City	Santa Clarita	Los Angeles	0.022%		**0.0178167%**
City	Santa Fe Springs	Los Angeles	0.031%		**0.0257531%**
City	Santa Monica	Los Angeles	0.158%		**0.1298513%**
City	Sierra Madre	Los Angeles	0.006%		**0.0048646%**
City	Signal Hill	Los Angeles	0.010%		**0.0084884%**
City	South El Monte	Los Angeles	0.005%		**0.0039603%**
City	South Gate	Los Angeles	0.020%		**0.0166272%**
City	South Pasadena	Los Angeles	0.012%		**0.0095334%**
City	Temple City	Los Angeles	0.005%		**0.0039498%**

City	Torrance	Los Angeles	0.112%		**0.0919820%**
City	Walnut	Los Angeles	0.006%		**0.0047305%**
City	West Covina	Los Angeles	0.049%		**0.0404521%**
City	West Hollywood	Los Angeles	0.013%		**0.0108517%**
City	Whittier	Los Angeles	0.032%		**0.0260581%**
County	***Madera County***	Madera	0.349%	0.427%	**0.3630669%**
City	Chowchilla	Madera	0.012%		**0.0097332%**
City	Madera	Madera	0.039%		**0.0318441%**
County	***Marin County***	Marin	0.564%	0.690%	**0.5861325%**
City	Larkspur	Marin	0.015%		**0.0124697%**
City	Mill Valley	Marin	0.020%		**0.0168401%**
City	Novato	Marin	0.028%		**0.0229824%**
City	San Anselmo	Marin	0.009%		**0.0078062%**
City	San Rafael	Marin	0.089%		**0.0729823%**
County	***Mariposa County***	Mariposa	0.084%	0.103%	**0.0876131%**
County	***Mendocino County***	Mendocino	0.439%	0.536%	**0.4558394%**
City	Ukiah	Mendocino	0.039%		**0.0317153%**

Participating Subdivision Classification	Participating Subdivision	County	Abatement Percentage	Plaintiff Subdivision Percentage	Weighted Allocation Percentage
County	***Merced County***	Merced	0.551%	0.674%	**0.5724262%**
City	Atwater	Merced	0.024%		**0.0195846%**
City	Livingston	Merced	0.006%		**0.0045873%**
City	Los Banos	Merced	0.020%		**0.0165142%**
City	Merced	Merced	0.061%		**0.0500762%**
County	***Modoc County***	Modoc	0.065%	0.080%	**0.0678250%**
County	***Mono County***	Mono	0.023%	0.029%	**0.0242606%**
County	***Monterey County***	Monterey	0.908%	1.111%	**0.9437083%**
City	Greenfield	Monterey	0.006%		**0.0050552%**
City	King City	Monterey	0.005%		**0.0037355%**
City	Marina	Monterey	0.017%		**0.0144098%**
City	Monterey	Monterey	0.041%		**0.0336540%**
City	Pacific Grove	Monterey	0.009%		**0.0074842%**
City	Salinas	Monterey	0.094%		**0.0776576%**
City	Seaside	Monterey	0.023%		**0.0191772%**
City	Soledad	Monterey	0.007%		**0.0060870%**

County	***Napa County***	Napa	0.288%	0.352%	**0.2994325%**
City	American Canyon	Napa	0.017%		**0.0136869%**
City	Napa	Napa	0.078%		**0.0642783%**
County	***Nevada County***	Nevada	0.441%	0.539%	**0.4579827%**
City	Grass Valley	Nevada	0.024%		**0.0197805%**
City	Truckee	Nevada	0.003%		**0.0023843%**
County	***Orange County***	Orange	4.364%	5.339%	**4.5363576%**
City	Aliso Viejo	Orange	0.014%		**0.0113841%**
City	Anaheim	Orange	0.554%	0.678%	**0.5759282%**
City	Brea	Orange	0.086%		**0.0708897%**
City	Buena Park	Orange	0.087%		**0.0714352%**
City	Costa Mesa	Orange	0.124%	0.152%	**0.1288366%**
City	Cypress	Orange	0.033%		**0.0271937%**
City	Dana Point	Orange	0.001%		**0.0005560%**

Participating Subdivision Classification	Participating Subdivision	County	Abatement Percentage	Plaintiff Subdivision Percentage	Weighted Allocation Percentage
City	Fountain Valley	Orange	0.055%		**0.0455980%**
City	Fullerton	Orange	0.137%	0.168%	**0.1425744%**
City	Garden Grove	Orange	0.213%		**0.1752482%**
City	Huntington Beach	Orange	0.247%	0.302%	**0.2568420%**
City	Irvine	Orange	0.139%	0.170%	**0.1442350%**
City	Laguna Beach	Orange	0.047%	0.058%	**0.0493043%**
City	Laguna Hills	Orange	0.014%		**0.0115457%**
City	Laguna Niguel	Orange	0.001%		**0.0007071%**
City	Laguna Woods	Orange	0.001%		**0.0006546%**
City	La Habra	Orange	0.060%	0.073%	**0.0621049%**
City	Lake Forest	Orange	0.012%		**0.0101249%**
City	La Palma	Orange	0.012%		**0.0095439%**
City	Los Alamitos	Orange	0.008%		**0.0069190%**
City	Mission Viejo	Orange	0.014%		**0.0117560%**
City	Newport Beach	Orange	0.179%		**0.1470134%**
City	Orange	Orange	0.150%		**0.1231320%**
City	Placentia	Orange	0.029%	0.035%	**0.0298912%**
City	Rancho Santa Margarita	Orange	0.001%		**0.0006296%**
City	San Clemente	Orange	0.008%	0.010%	**0.0086083%**

City	San Juan Capistrano	Orange	0.008%		**0.0065510%**
City	Santa Ana	Orange	0.502%	0.614%	**0.5213866%**
City	Seal Beach	Orange	0.020%		**0.0165891%**
City	Stanton	Orange	0.035%		**0.0291955%**
City	Tustin	Orange	0.073%		**0.0600341%**
City	Westminster	Orange	0.104%	0.127%	**0.1082721%**
City	Yorba Linda	Orange	0.044%		**0.0362223%**
County	***Placer County***	Placer	1.045%	1.278%	**1.0861002%**
City	Auburn	Placer	0.017%		**0.0141114%**
City	Lincoln	Placer	0.031%		**0.0255599%**
City	Rocklin	Placer	0.076%		**0.0625485%**

Participating Subdivision Classification	Participating Subdivision	County	Abatement Percentage	Plaintiff Subdivision Percentage	Weighted Allocation Percentage
City	Roseville	Placer	0.196%		**0.1616559%**
County	***Plumas County***	Plumas	0.205%	0.251%	**0.2128729%**
County	***Riverside County***	Riverside	4.534%	5.547%	**4.7128296%**
City	Banning	Riverside	0.017%		**0.0143848%**
City	Beaumont	Riverside	0.021%		**0.0171135%**
City	Blythe	Riverside	0.012%		**0.0096714%**
City	Canyon Lake	Riverside	0.000%		**0.0001761%**
City	Cathedral City	Riverside	0.067%		**0.0553614%**
City	Coachella	Riverside	0.021%		**0.0173054%**
City	Corona	Riverside	0.147%		**0.1207083%**
City	Desert Hot Springs	Riverside	0.024%		**0.0200433%**
City	Eastvale	Riverside	0.000%		**0.0002747%**
City	Hemet	Riverside	0.051%		**0.0421792%**
City	Indio	Riverside	0.056%		**0.0457794%**
City	Jurupa Valley	Riverside	0.001%		**0.0008991%**
City	Lake Elsinore	Riverside	0.021%		**0.0172949%**
City	La Quinta	Riverside	0.063%		**0.0516732%**
City	Menifee	Riverside	0.032%		**0.0260909%**
City	Moreno Valley	Riverside	0.137%		**0.1130348%**
City	Murrieta	Riverside	0.048%	0.059%	**0.0497423%**
City	Norco	Riverside	0.016%		**0.0134542%**
City	Palm Desert	Riverside	0.083%		**0.0682465%**

City	Palm Springs	Riverside	0.076%		**0.0629862%**
City	Perris	Riverside	0.009%		**0.0076774%**
City	Rancho Mirage	Riverside	0.052%		**0.0431098%**
City	Riverside	Riverside	0.268%		**0.2206279%**
City	San Jacinto	Riverside	0.010%		**0.0085936%**
City	Temecula	Riverside	0.022%		**0.0180086%**
City	Wildomar	Riverside	0.008%		**0.0062500%**
County	***Sacramento County***	Sacramento	3.797%	4.645%	**3.9465887%**

Participating Subdivision Classification	Participating Subdivision	County	Abatement Percentage	Plaintiff Subdivision Percentage	Weighted Allocation Percentage
City	Citrus Heights	Sacramento	0.057%		**0.0465312%**
City	Elk Grove	Sacramento	0.130%		**0.1066994%**
City	Folsom	Sacramento	0.108%		**0.0890850%**
City	Galt	Sacramento	0.017%		**0.0143704%**
City	Rancho Cordova	Sacramento	0.008%		**0.0067679%**
City	Sacramento	Sacramento	0.721%	0.882%	**0.7496530%**
County	***San Benito County***	San Benito	0.106%	0.130%	**0.1101417%**
City	Hollister	San Benito	0.027%		**0.0225355%**
County	***San Bernardino County***	San Bernardino	3.259%	3.987%	**3.3878124%**
City	Adelanto	San Bernardino	0.008%		**0.0066640%**
City	Apple Valley	San Bernardino	0.025%		**0.0207360%**
City	Barstow	San Bernardino	0.015%		**0.0122056%**
City	Chino	San Bernardino	0.064%		**0.0525893%**
City	Chino Hills	San Bernardino	0.001%		**0.0006388%**
City	Colton	San Bernardino	0.031%		**0.0253443%**
City	Fontana	San Bernardino	0.112%		**0.0920543%**
City	Grand Terrace	San Bernardino	0.006%		**0.0051051%**
City	Hesperia	San Bernardino	0.035%		**0.0291522%**
City	Highland	San Bernardino	0.004%		**0.0029061%**
City	Loma Linda	San Bernardino	0.009%		**0.0071188%**
City	Montclair	San Bernardino	0.039%		**0.0322108%**
City	Ontario	San Bernardino	0.179%		**0.1472934%**
City	Rancho Cucamonga	San Bernardino	0.084%		**0.0689431%**
City	Redlands	San Bernardino	0.057%		**0.0469150%**
City	Rialto	San Bernardino	0.073%		**0.0603206%**

City	San Bernardino	San Bernardino	0.178%		**0.1461880%**
City	Twentynine Palms	San Bernardino	0.002%		**0.0012605%**
City	Upland	San Bernardino	0.052%		**0.0424460%**
City	Victorville	San Bernardino	0.033%		**0.0269400%**
City	Yucaipa	San Bernardino	0.016%		**0.0128772%**

Participating Subdivision Classification	Participating Subdivision	County	Abatement Percentage	Plaintiff Subdivision Percentage	Weighted Allocation Percentage
City	Yucca Valley	San Bernardino	0.003%		**0.0021228%**
County	***San Diego County***	San Diego	5.706%	6.980%	**5.9309748%**
City	Carlsbad	San Diego	0.128%		**0.1050485%**
City	Chula Vista	San Diego	0.189%	0.231%	**0.1961456%**
City	Coronado	San Diego	0.044%		**0.0359095%**
City	El Cajon	San Diego	0.113%		**0.0933582%**
City	Encinitas	San Diego	0.061%	0.074%	**0.0630289%**
City	Escondido	San Diego	0.145%		**0.1192204%**
City	Imperial Beach	San Diego	0.014%		**0.0118283%**
City	La Mesa	San Diego	0.055%	0.068%	**0.0575593%**
City	Lemon Grove	San Diego	0.022%		**0.0183911%**
City	National City	San Diego	0.080%		**0.0656808%**
City	Oceanside	San Diego	0.213%		**0.1753428%**
City	Poway	San Diego	0.062%		**0.0511040%**
City	San Diego	San Diego	1.975%	2.416%	**2.0531169%**
City	San Marcos	San Diego	0.089%		**0.0733897%**
City	Santee	San Diego	0.033%		**0.0268401%**
City	Solana Beach	San Diego	0.017%		**0.0138564%**
City	Vista	San Diego	0.052%		**0.0425144%**
Consolidated	***San Francisco***	San Francisco	3.026%	3.702%	**3.1457169%**
County	***San Joaquin County***	San Joaquin	1.680%	2.055%	**1.7460399%**
City	Lathrop	San Joaquin	0.009%		**0.0075394%**
City	Lodi	San Joaquin	0.053%		**0.0439484%**
City	Manteca	San Joaquin	0.054%		**0.0443454%**
City	Ripon	San Joaquin	0.013%		**0.0104219%**
City	Stockton	San Joaquin	0.313%	0.383%	**0.3256176%**
City	Tracy	San Joaquin	0.084%		**0.0692047%**
County	***San Luis Obispo County***	San Luis Obispo	0.816%	0.999%	**0.8484126%**

City	Arroyo Grande	San Luis Obispo	0.024%		**0.0199053%**
City	Atascadero	San Luis Obispo	0.029%		**0.0240680%**

Participating Subdivision Classification	Participating Subdivision	County	Abatement Percentage	Plaintiff Subdivision Percentage	Weighted Allocation Percentage
City	El Paso de Robles (Paso Robles)	San Luis Obispo	0.043%		**0.0353456%**
City	Grover Beach	San Luis Obispo	0.017%		**0.0137881%**
City	Morro Bay	San Luis Obispo	0.020%		**0.0160922%**
City	San Luis Obispo	San Luis Obispo	0.077%		**0.0637841%**
County	***San Mateo County***	San Mateo	1.074%	1.313%	**1.1159599%**
City	Belmont	San Mateo	0.021%		**0.0169860%**
City	Burlingame	San Mateo	0.019%		**0.0152537%**
City	Daly City	San Mateo	0.044%		**0.0363880%**
City	East Palo Alto	San Mateo	0.013%		**0.0103982%**
City	Foster City	San Mateo	0.020%		**0.0166101%**
City	Half Moon Bay	San Mateo	0.004%		**0.0031638%**
City	Hillsborough	San Mateo	0.013%		**0.0110029%**
City	Menlo Park	San Mateo	0.015%		**0.0126209%**
City	Millbrae	San Mateo	0.013%		**0.0105836%**
City	Pacifica	San Mateo	0.016%		**0.0130625%**
City	Redwood City	San Mateo	0.056%		**0.0463511%**
City	San Bruno	San Mateo	0.021%		**0.0172161%**
City	San Carlos	San Mateo	0.013%		**0.0108885%**
City	San Mateo	San Mateo	0.052%		**0.0425841%**
City	South San Francisco	San Mateo	0.043%		**0.0353943%**
County	***Santa Barbara County***	Santa Barbara	1.132%	1.385%	**1.1768968%**
City	Carpinteria	Santa Barbara	0.001%		**0.0008938%**
City	Goleta	Santa Barbara	0.004%		**0.0028969%**
City	Lompoc	Santa Barbara	0.047%		**0.0389379%**
City	Santa Barbara	Santa Barbara	0.122%		**0.1004559%**
City	Santa Maria	Santa Barbara	0.058%		**0.0479179%**
County	***Santa Clara County***	Santa Clara	2.404%	2.941%	**2.4987553%**
City	Campbell	Santa Clara	0.014%		**0.0112566%**
City	Cupertino	Santa Clara	0.008%		**0.0066824%**
City	Gilroy	Santa Clara	0.025%		**0.0202891%**

APPENDIX 1

Participating Subdivision Classification	Participating Subdivision	County	Abatement Percentage	Plaintiff Subdivision Percentage	Weighted Allocation Percentage
City	Los Altos	Santa Clara	0.013%		**0.0103338%**
City	Los Gatos	Santa Clara	0.013%		**0.0103220%**
City	Milpitas	Santa Clara	0.036%		**0.0298120%**
City	Morgan Hill	Santa Clara	0.015%		**0.0124619%**
City	Mountain View	Santa Clara	0.041%		**0.0334608%**
City	Palo Alto	Santa Clara	0.039%		**0.0323080%**
City	San Jose	Santa Clara	0.294%	0.360%	**0.3054960%**
City	Santa Clara	Santa Clara	0.067%		**0.0549723%**
City	Saratoga	Santa Clara	0.004%		**0.0034161%**
City	Sunnyvale	Santa Clara	0.053%		**0.0434069%**
County	***Santa Cruz County***	Santa Cruz	0.783%	0.957%	**0.8135396%**
City	Capitola	Santa Cruz	0.020%		**0.0168191%**
City	Santa Cruz	Santa Cruz	0.143%		**0.1180348%**
City	Scotts Valley	Santa Cruz	0.015%		**0.0126525%**
City	Watsonville	Santa Cruz	0.063%		**0.0520136%**
County	***Shasta County***	Shasta	1.095%	1.339%	**1.1380191%**
City	Anderson	Shasta	0.024%		**0.0198896%**
City	Redding	Shasta	0.284%		**0.2334841%**
City	Shasta Lake	Shasta	0.004%		**0.0031993%**
County	***Siskiyou County***	Siskiyou	0.228%	0.279%	**0.2373393%**
County	***Solano County***	Solano	0.760%		**0.6260795%**
City	Benicia	Solano	0.031%		**0.0253903%**
City	Dixon	Solano	0.016%		**0.0130849%**
City	Fairfield	Solano	0.109%		**0.0897317%**
City	Suisun City	Solano	0.021%		**0.0176183%**
City	Vacaville	Solano	0.119%		**0.0976497%**
City	Vallejo	Solano	0.167%		**0.1373644%**
County	***Sonoma County***	Sonoma	1.218%	1.490%	**1.2661290%**
City	Healdsburg	Sonoma	0.032%		**0.0266929%**
City	Petaluma	Sonoma	0.081%		**0.0667507%**

Participating Subdivision Classification	Participating Subdivision	County	Abatement Percentage	Plaintiff Subdivision Percentage	Weighted Allocation Percentage

City	Rohnert Park	Sonoma	0.041%		**0.0340759%**
City	Santa Rosa	Sonoma	0.184%		**0.1519070%**
City	Sonoma	Sonoma	0.022%		**0.0183438%**
City	Windsor	Sonoma	0.016%		**0.0129298%**
County	***Stanislaus County***	Stanislaus	1.722%		**1.4182273%**
City	Ceres	Stanislaus	0.041%		**0.0340260%**
City	Modesto	Stanislaus	0.217%		**0.1788759%**
City	Newman	Stanislaus	0.006%		**0.0046964%**
City	Oakdale	Stanislaus	0.018%		**0.0145531%**
City	Patterson	Stanislaus	0.015%		**0.0126590%**
City	Riverbank	Stanislaus	0.010%		**0.0085699%**
City	Turlock	Stanislaus	0.065%		**0.0531966%**
County	***Sutter County***	Sutter	0.306%	0.374%	**0.3179548%**
City	Yuba City	Sutter	0.074%		**0.0606242%**
County	***Tehama County***	Tehama	0.213%	0.261%	**0.2216654%**
City	Red Bluff	Tehama	0.014%		**0.0117771%**
County	***Trinity County***	Trinity	0.082%	0.101%	**0.0855476%**
County	***Tulare County***	Tulare	0.809%	0.990%	**0.8410949%**
City	Dinuba	Tulare	0.014%		**0.0116929%**
City	Exeter	Tulare	0.004%		**0.0032479%**
City	Farmersville	Tulare	0.003%		**0.0027879%**
City	Lindsay	Tulare	0.007%		**0.0057111%**
City	Porterville	Tulare	0.021%		**0.0171845%**
City	Tulare	Tulare	0.037%		**0.0302273%**
City	Visalia	Tulare	0.066%		**0.0545872%**
County	***Tuolumne County***	Tuolumne	0.486%	0.594%	**0.5047621%**
County	***Ventura County***	Ventura	2.192%	2.681%	**2.2781201%**
City	Camarillo	Ventura	0.002%		**0.0012815%**
City	Fillmore	Ventura	0.002%		**0.0020294%**
City	Moorpark	Ventura	0.008%		**0.0067337%**

Participating Subdivision Classification	Participating Subdivision	County	Abatement Percentage	Plaintiff Subdivision Percentage	Weighted Allocation Percentage
City	Oxnard	Ventura	0.156%	0.190%	**0.1617338%**
City	Port Hueneme	Ventura	0.021%		**0.0174145%**
City	San Buenaventura (Ventura)	Ventura	0.085%		**0.0702181%**

City	Santa Paula	Ventura	0.014%		**0.0119072%**
City	Simi Valley	Ventura	0.065%		**0.0533043%**
City	Thousand Oaks	Ventura	0.022%		**0.0179902%**
County	***Yolo County***	Yolo	0.357%	0.437%	**0.3713319%**
City	Davis	Yolo	0.055%		**0.0451747%**
City	West Sacramento	Yolo	0.066%		**0.0544321%**
City	Woodland	Yolo	0.058%		**0.0477904%**
County	***Yuba County***	Yuba	0.214%	0.262%	**0.2225679%**
City	Marysville	Yuba	0.014%		**0.0112079%**

APPENDIX 2

Cost Reimbursement Procedure

1. Additional defined terms:

a) *Costs* means the reasonable amounts paid for the attorney and other City Attorney and County Counsel staff time for individuals employed by a Plaintiff Subdivision at the contractual rate, inclusive of benefits and overhead, together with amounts paid for court reporters, experts, copying, electronic research, travel, vendors, and the like, which were not previously reimbursed and which were paid or incurred (i) prior to December 31, 2022 in litigation against any Opioid Defendant and/or (ii) in negotiating and drafting any CA Allocation Agreement(s) concerning a settlement with any Opioid Defendant(s). *Costs* does not include attorneys' fees, costs, or expenses incurred by private contingency fee counsel. No part of the CA Abatement Accounts Fund will be used to reimburse Costs.

b) *First Claims Date* means October 1, 2023 or when all applications for reimbursement of Costs, in whole or in part, from funds available under Section IX and Exhibit R of the Walgreens Settlement Agreement, Section XIV and Exhibit R of the Teva Settlement Agreement, Section XIII and Exhibit R of the Allergan Settlement Agreement, Section X and Exhibit R of the Distributor Settlement Agreement, Section XI and Exhibit R of the Janssen Settlement Agreement, Section X and Exhibit R of the CVS Settlement Agreement, or Section IX and Exhibit R of the Walmart Settlement Agreement, have been finally determined under the provisions of those agreements, whichever comes first.

c) *Special Master* means a retired judicial officer or former public lawyer, not presently employed or retained by a Plaintiff Subdivision, who will aggregate, review, and determine the reasonable Costs to be awarded to each Plaintiff Subdivision that submits a claim for reimbursement of Costs. The Special Master will be selected by a majority vote of the votes cast by Plaintiff Subdivisions, with each such subdivision having one vote.

d) *Plaintiff Subdivision Committee* means the committee of Plaintiff Subdivisions that will review and approve the invoices submitted by the Special Master reflecting his or her reasonable time and expenses.

2. Cost Reimbursement to Plaintiff Subdivision

a) Purpose. Substantial resources have been expended to hold Opioid Defendants accountable for creating and profiting from the opioid crisis, and this effort has been a significant catalyst in creating National Opioid Settlements with various manufacturers, distributors, and chain pharmacies.

///

b) Claims Procedure.

i. If a Plaintiff Subdivision is eligible to seek reimbursement of Costs, in whole or in part, from funds available under Section IX and Exhibit R of the Kroger Settlement Agreement, Section IX and Exhibit R of the Walgreens Settlement Agreement, Section XIV and Exhibit R of the Teva Settlement Agreement, Section XIII and Exhibit R of the Allergan Settlement Agreement, Section X and Exhibit R of the CVS Settlement Agreement, Section IX and Exhibit R of the Walmart Settlement Agreement, Section X or Exhibit R of the Distributor Settlement Agreement, or Section XI or Exhibit R of the Janssen Settlement Agreement, it must first make a timely application for reimbursement from such funds. To allow sufficient time for determination of those applications, no claim for Costs to the CA Subdivision Fund under this Agreement may be made before the First Claims Date.

ii. A Plaintiff Subdivision that wishes to be reimbursed from the CA Subdivision Fund must submit a claim to the Special Master no later than forty-five (45) days after the First Claims Date. The Special Master will then compile and redistribute the aggregated claim totals for each Plaintiff Subdivision via email to representatives of all the Plaintiff Subdivisions. A claim for attorney and staff time must list, for each attorney or staff member included in the claim, the following information: name, title, total hours claimed, hourly rate (including, if sought, benefits and share of overhead), and narrative summarizing the general nature of the work performed by the attorney or staff member. For reimbursement of "hard" costs, the subdivision may aggregate across a category (e.g., total for travel costs). It is the intention of the Plaintiff Subdivisions that submission of documents related to reimbursement of Costs does not waive any attorney-client privilege or exemptions to the California Public Records Act.

iii. The Special Master may request, at his or her sole option, additional documents or details to assist in the final award of Costs.

iv. The Special Master will review claims for reasonableness and will notify each Plaintiff Subdivision of the final determination of its claim, and will provide a list of all final awards to all Plaintiff Subdivisions by email or, upon request, via First Class U.S. Mail. Any Plaintiff Subdivision may ask the Special Master to reconsider any final award within twenty-one (21) days. The Special Master will make a final determination on any such reconsideration request within thirty (30) days of receipt.

v. Any decision of the Special Master is final and binding, and will be considered under the California Arbitration Act, Code of Civil Procedure section 1280 et seq. as a final arbitration award. Nothing in this agreement is intended to expand the scope of judicial review of the final award for errors of fact or law, and the Parties agree that they may only seek to vacate the award if clear and convincing evidence demonstrates one of the factors set forth in Code of Civil Procedure, section 1286.2, subdivision (a). Plaintiff Subdivisions will have fourteen (14) days after all final awards are made, together with any final determination of a request for

reconsideration, to seek review in the Superior Court of California, pursuant to Code of Civil Procedure, section 1285, where the State has filed its Consent Judgment.

vi. The Special Master will prepare a report of Costs that includes his or her fees and expenses at least ninety (90) days before the Payment Date for each Annual Payment. The Special Master's preparation of a report of Costs does not discharge a Plaintiff Subdivision's reporting requirement under Section V(B)(2) of the Kroger Settlement Agreement.

vii. A member of the Plaintiff Subdivision Committee, which is a CA Participating Subdivision, will submit to the Settlement Fund Administrator and Kroger a report of the fees and expenses incurred by the Special Master pursuant to Section V(B)(2) of the Kroger Settlement Agreement.

c) Claims Priority and Limitation.

i. The Special Master will submit invoices for compensation of reasonable fees and expenses to the Plaintiff Subdivision Committee no later than ninety (90) days prior to the Payment Date for each Annual Payment. The Plaintiff Subdivision Committee will promptly review and, if reasonable, approve the Special Master's invoice for compensation. The Plaintiff Subdivision Committee will submit approved invoices to the Settlement Fund Administrator for payment. The Special Master's approved invoices have priority and will be paid first from the CA Subdivision Fund before any award of Costs, subject to the limitation in Section 2.c.v below.

ii. Final Awards of Costs that do not exceed seventy-five thousand dollars ($75,000.00) will be paid next in priority after the Special Master's approved invoices.

iii. Final Awards of Costs in excess of seventy-five thousand dollars ($75,000.00) will be paid proportionally from the funds remaining in that year's Annual Payment.

iv. Any claim for Costs that is not paid in full will be allocated against the next year's distribution from the CA Subdivision Fund, until all approved claims for Costs are paid in full.

v. In no event will more than 50% of the total CA Subdivision Fund received in any year be used to pay Costs or the Special Master's approved invoices.

vi. In no event shall more than $28 million of the total CA Subdivision Funds paid pursuant to the Kroger Settlement Agreement, Walgreens Settlement Agreement, Teva Settlement Agreement, Allergan Settlement Agreement, Distributor Settlement Agreement, CVS Settlement Agreement, Janssen Settlement Agreement, and the Walmart Settlement Agreement be used to pay Costs.

d) Collateral Source Payments and Third-Party Settlement.

i. In the event a Plaintiff Subdivision is awarded compensation, in whole or in part, by any source of funds created as a result of litigation against an Opioid Defendant for its reasonable Costs, it will reduce its claim for Costs from the CA Subdivision Fund by that amount. If a Plaintiff Subdivision has already received a final award of Costs from the CA Subdivision Fund, it will repay the fund up to the prior award of Costs via a payment to the Settlement Fund Administrator or notify the Settlement Fund Administrator that its allocation from the next and subsequent Annual Payments should be reduced accordingly. If the Plaintiff Subdivision is repaying any prior award of Costs, that repayment will occur as soon as is feasible after the Plaintiff Subdivision's receipt of Cost funds from the collateral source, but no more than 90 days after its receipt from the collateral source. The Settlement Fund Administrator will add any repaid Costs to the CA Subdivision Fund. Any Plaintiff Subdivision that has submitted for reimbursement to any national fund and has not received a final determination by the First Claims Date may request that the settlement administrator withhold some or all of its payment from the CA Subdivision Fund in order to avoid repayment.

ii. In the event a Plaintiff Subdivision reaches a monetary settlement or compromise against any Opioid Defendant outside of the National Opioid Settlement, the monetary portion of such settlement, net of fees paid to outside contingency fee counsel and of funds earmarked strictly for abatement, will be credited against its Costs and the subdivision will be ineligible to recover those credited Costs from the CA Subdivision Fund. Plaintiff Subdivisions negotiating monetary settlements or compromises against any Opioid Defendant outside of the National Opioid Settlement will negotiate for funds to repay any Costs it previously received from the CA Subdivision Fund or for Costs it otherwise might be eligible to claim from the CA Subdivision Fund. If such a settlement is paid after all final approved claims for Costs by all Plaintiff Subdivisions are satisfied in full, the settling subdivision will reimburse the CA Subdivision Fund in that amount by making payment to the Settlement Fund Administrator to add to the CA Subdivision Fund in a manner consistent with the repayments described in section 2.d.i above.

APPENDIX 3

CALIFORNIA-SUBDIVISION BACKSTOP AGREEMENT

On August 6, 2021, Judge Polster of the US District Court for the Northern District of Ohio issued an Order (the Order), docket number 3814, in In Re National Prescription Opiate Litigation, MDL 2804, addressing contingent attorney fee contracts between political subdivisions eligible to participate in the Kroger Settlement and their counsel.

In light of the Order, and at the request of [SUBDIVISION], the [SUBDIVISION], its counsel [COUNSEL], and the California Attorney General, on behalf of the State of California, are entering into this California-Subdivision Backstop Agreement (Backstop Agreement).

[SUBDIVISION] and [COUNSEL] intend this Backstop Agreement to constitute a State Back-Stop Agreement as that term is used in the Order and in Exhibit R (Agreement on Attorneys' Fees, Costs, and Expenses) of the Kroger Settlement Agreement.

Pursuant to this Backstop Agreement, [SUBDIVISION] may, subject to the limitations of the Kroger Settlement Agreement and CA Kroger Allocation Agreement, as well as any other limitations imposed by law, use funds that it receives from the Kroger Settlement CA Subdivision Fund to pay a contingent fee to [COUNSEL]. Any such payment from [SUBDIVISION] to [COUNSEL], together with any contingency fees that [COUNSEL] may receive from the national Attorney Fee Fund, will not exceed a total contingency fee of [PERCENTAGE NOT TO EXCEED 15%] of the total gross recovery of [SUBDIVISION] from the Kroger Settlement.

[COUNSEL] certify that they first sought fees and costs from the Attorney Fee Fund created under the Kroger Settlement Agreement before seeking or accepting payment under this backstop agreement. [COUNSEL] further certify that they are not seeking and will not accept payment under this backstop agreement of any litigation fees or costs that have been reimbursed through prior settlements or judgments.

The Attorney General is executing this agreement solely because the definition of "State Back-Stop Agreement" in Exhibit R of the Kroger Settlement Agreement requires such agreements to be between "a Settling State" and private counsel for a participating subdivision. Neither the California Attorney General nor the State of California have any obligations under this Backstop Agreement, and this Backstop Agreement does not require the payment of any state funds to [SUBDIVISION], [COUNSEL], or any other party.

[DATE]	[SUBDIVISION SIGNATURE BLOCK]
[DATE]	[COUNSEL SIGNATURE BLOCK]
[DATE]	[ATTORNEY GENERAL SIGNATURE BLOCK]

ROCKLIN
CALIFORNIA

City Council Staff Report

Subject: Clover Valley Funding Agreement

Date: February 25, 2025

Submitted By: Matthew McOmber, City Attorney
Aly Zimmermann, City Manager

Department: City Council

Recommendation:
Adopt a Resolution of the City Council of the City of Rocklin Approving the Use of Funds Agreement between the City of Rocklin and Placer Land Trust for Clover Valley.

Background:
On January 27, 2025, the Rocklin City Council directed staff to prepare an agreement between the City of Rocklin and the Placer Land Trust for a $2,000,000 donation toward the purchase of property within Clover Valley, often referred to as the "slopes and valley floor." The City Council provided direction on certain deal points to be included in the agreement, which are reflected in the proposed Use of Funds Agreement (Attachment 2). These deal points include, but are not limited to:

- The City shall provide $2,000,000 in funding to be used toward the acquisition of the property and the recordation of a conservation easement on the property. The City shall have no obligation to cover any fees or costs associated with the property purchase.
- Funds will be placed in an escrow account and may only be distributed for the purchase of the property.
- If the property is not purchased within one year of the agreement’s execution, the funds will be returned to the City.
- The property owner shall allow public access in perpetuity, including trails, recreational use, and educational facilities.
- The City shall review and approve any property management plan.

The City Council also directed staff to allocate one-time Fiscal Year (FY) 2023/24 year-end General Fund surplus resources to fund the donation. The attached resolution (Attachment 1) authorizes the City Manager to allocate these resources for this purpose. Upon approval, the Mayor will sign the agreement on behalf of the City, and staff will arrange for the donation to be deposited into an escrow account, pending the property's purchase.

Fiscal Impact:
The $2,000,000 donation, funded by one-time FY 2023/24 General Fund year-end surplus resources, will not impact ongoing City operations. Availability of funds is contingent upon City Council approval of the FY 2023/24 General Fund year end surplus resources recommendation list, which is included in Discussion Item 2 on the February 25, 2025 City Council meeting agenda.

ATTACHMENTS:
1. Resolution
2. Resolution Exhibit A - Use of Funds Agreement

RESOLUTION 2025-XXX

RESOLUTION OF THE CITY COUNCIL OF THE CITY OF ROCKLIN
APPROVING THE USE OF FUNDS AGREEMENT BETWEEN
THE CITY OF ROCKLIN AND PLACER LAND TRUST FOR CLOVER VALLEY

WHEREAS, on January 27, 2025, the City Council of the City of Rocklin directed staff to prepare an agreement between the City of Rocklin and Placer Land Trust for a $2,000,000 donation toward the purchase of property within Clover Valley, often referred to as the "valley slopes and floor"; and

WHEREAS, the City Council outlined specific requirements to ensure the protection of funds and to provide a public benefit, including placing the funds in an escrow account, requiring the recordation of a conservation easement, mandating public access in perpetuity, and ensuring the City's review and approval of a property management plan, as outlined in Exhibit A; and

WHEREAS, the City Council directed staff to use the one-time Fiscal Year 2023/24 year-end General Fund surplus resources to fund the donation.

NOW, THEREFORE, BE IT RESOLVED by the City Council of the City of Rocklin as follows:

Section 1. The Use of Funds Agreement between the City of Rocklin and Placer Land Trust for Clover Valley is hereby approved, in substantially the form attached hereto as Exhibit A, with funding allocated from the General Fund (100) fund balance.

PASSED AND ADOPTED this 25th day of February, 2025, by the City Council of the City of Rocklin, by the following vote:

AYES: Councilmember
NOES: Councilmember
ABSENT: Councilmember
ABSTAIN: Councilmember

_____
Jill Gayaldo, Mayor

ATTEST:

_____
Avinta Singh, City Clerk

USE OF FUNDS AGREEMENT BETWEEN THE CITY OF ROCKLIN AND THE PLACER LAND TRUST FOR CLOVER VALLEY ACQUISITION AND PROTECTION VIA CONSERVATION EASEMENT

This Use of Funds Agreement ("Agreement") is made and entered into this _____ day of _____ 2025, by and between the City of Rocklin, hereinafter referred to as the "City," and the Placer Land Trust ("PLT"), a private non-profit 501(c)(3) public benefit organization, hereinafter referred to as "Grantee" (collectively referred to as the "Parties").

RECITALS

WHEREAS, Clover Valley consists of approximately 622 acres west of Sierra College Boulevard and Union Pacific Railroad and east of Park Drive within the City of Rocklin, and is one of the last remaining, intact sections of oak and riparian woodlands in western Placer County;

WHEREAS, Clover Valley includes expanses of oak woodland, with approximately 27,000 oak trees in addition to grassland and riparian habitats, an approximately 20-acre wetland that supports California Black Rail, a California threatened bird species, Swainson's Hawk critical foraging habitats, and the perennial Clover Valley Creek that supported salmonids as recently as 1985;

WHEREAS, Clover Valley has been home to Native Americans for over 7,000 years and was a major tribal center according to archeologists that includes at least 34 prehistoric sites;

WHEREAS, Clover Valley is also currently the site of an approved development with entitlements for several hundred single family homes and associated infrastructure across the valley floor;

WHEREAS, the Parties have an interest in assisting in the purchase, acquisition, and protection of approximately 402 or more acres within the Clover Valley, sometimes referred to as the "valley slopes and floors," which is more particularly depicted in the map attached and incorporated hereto as Exhibit A (the "Property") for the purposes of conservation of not only Oak Trees and other associated habitat, but also for other public benefit purposes;

WHEREAS, the Parties have an interest in ensuring the Property is permanently protected by a conservation easement ("Conservation Easement");

WHEREAS, use of City funds for the acquisition and recordation of a Conservation Easement on the Property provides significant public benefits since protection of the Property preserves open space land within the City and County, protects Oak woodlands and associated habitat and sensitive biological resources, ensures natural resources within the City will be preserved for future generations, and furthers the policies of the City's General Plan/Open Space Conservation and Recreation Element;

WHEREAS, the City Council further finds that conservation of the Property will enhance the quality of life for members of the public and residents in numerous ways, including but not limited to enhancing the overall aesthetic of the City as a result of the unique, scenic landscapes of the Property and in addition, conservation of the Property will protect the natural and ecological integrity of the area and facilitate the ability of future generations to view and enjoy these benefits;

WHEREAS, in order to achieve the aforementioned public benefits and purposes, the City desires to contribute up to two million dollars ($2,000,000) to Grantee to assist in acquisition of the Property and recordation of a Conservation Easement on the Property;

WHEREAS, the Parties acknowledge that $2,000,000 is a portion of the total cost to purchase the Property and other non-City of Rocklin donations, contributions, and sources of funds are anticipated to provide the majority of project funding, up to the approximately ten million dollar ($10,000,000) purchase price.

NOW, **THEREFORE**, it is hereby agreed by and between the Parties as follows:

1. The Recitals above are true and correct and are incorporated into this Agreement.

2. City shall provide to Grantee funds in the amount of two million and no/100 dollars ($2,000,000) (the "Grant Funds") that shall go toward acquisition of the Property and recordation of a Conservation Easement on the Property. Grantee shall provide City with the escrow account into which the Grant Funds will be deposited, along with any other information reasonably necessary to allow the City to wire or otherwise deliver the Grant Funds to Grantee; within twenty (20) days of either execution of this Agreement or Grantee having provided notice, whichever is later, the City shall deposit the funds into escrow.

3. Grantee shall use Grant Funds exclusively for the purchase of the Property and recordation of a Conservation Easement of the Property and shall provide a written confirmation of the transfer of funds for the purchase of the Property and recordation of a Conservation Easement in a format reasonably acceptable to the City, including an accounting of the use of the Grant Funds upon request by the City.

4. Grantee shall recognize in any advertisements, signage, plans or other documentation that the permanent protection of the Property was funded in part by the City of Rocklin. Recognition of the City of Rocklin shall be provided in the same manner as recognition provided to other funding entities.

5. Grantee shall comply with all laws, rules, and regulations applicable to the use of the Grant Funds.

6. Grantee agrees that the Grant Funds are provided for and shall be used exclusively for the acquisition of the Property and the Conservation Easement and shall not be used for any purpose not specified in this Agreement. Accordingly, Grantee further agrees that if the Property is not ultimately purchased, or if a Conservation Easement is not recorded upon the Property within one (1) year of

execution of this Agreement, if the Grant Funds or any amount thereof are not used exclusively to pay for the purchase of the Property, or if any other condition for the donation is not timely met, Grantee shall return the Grant Funds in their entirety without delay to the City.

7. The Parties agree that the Conservation Easement placed upon the Property shall be recorded, it shall be in perpetuity, and it shall allow for public access and recreation and educational purposes. Management and enforcement of the Conservation Easement, including approval rights within the Conservation Easement, shall rest with Grantee exclusively such that Grantor shall not be expected to, nor shall it have any obligation or requirement to manage or enforce any aspect of the Property and shall not be required to incur any expense, cost, fee, outlay, or other burden with respect to the Property; provided however that any and all management plans and similar documents shall be subject to City review and approval as set forth in section 10 herein..

8. In no event shall the maximum amount payable by the City under this agreement exceed two million dollars ($2,000,000). Further, City shall have no obligation whatsoever to pay for any costs or fees that may be associated with the Property, escrow, escrow fees, post-acquisition costs, management, management plans, state or federal income or property taxes, recording fees, maintenance costs, or any and all other types of fees.

9. In the event that Grantee is not the Property owner at any point in time subsequent to the execution of this Agreement, Grantee shall enter into an agreement with the owner of the Property to establish and record a conservation easement.

10. Any management plan or similar document prepared for the administration of the Property must be reviewed and approved by the City to ensure compliance with this agreement, to ensure it meets City expectations for public access and further, to ensure any impacts to the City are timely and fully addressed to the City's reasonable satisfaction.

11. To the fullest extent permitted by law, Grantee shall indemnify and hold harmless City, its elected officials, officers, employees, agents, and volunteers against all claims, suits, actions, costs, expenses (including, but not limited to, reasonable attorney's fees of the City Attorney and counsel retained by City, expert fees, litigation costs, and investigation costs), damages, judgments, or decrees arising from the work or the provision of services undertaken pursuant to this agreement by Grantee, or by any of Grantee's subcontractors, any person employed under Grantee, or under any subcontractor, or in any capacity, except when the injury or loss is caused by the sole negligence or intentional wrongdoing of City. Grantee shall also, at Grantee's expense, defend the City, its elected officials, officers, employees, agents, and volunteers, against any claim, suit, action, or proceeding brought against City, its elected officials, officers, employees, agents, and volunteers, arising from the work or the provision of services undertaken pursuant to this agreement by Grantee, or any of Grantee's subcontractors, any person employed under Grantee, or under any Subcontractor, or in any capacity. Grantee shall also defend and indemnify City for any adverse determination made by the Internal Revenue Service or the State Franchise Tax Board and/or any other

taxing or regulatory agency and shall defend, indemnify, and hold harmless City with respect to Grantee's "independent contractor" status that would establish a liability on City for failure to make social security deductions or contributions or income tax withholding payments, or any other legally mandated payment. The provisions of this paragraph are intended to be interpreted as broadly as permitted by applicable law. This provision shall survive the termination, expiration, or cancellation of this agreement.

12. City's rights regarding (a) the format and content of the Conservation Easement described in paragraphs 3 and 7 above, and (b) recognition of City per paragraph 4 above, shall not supersede Grantee's obligations to other project funders and landowner(s) of the Property, and the resolution of any inconsistency among project funders regarding paragraphs 3, 4, and 7 herein will be reasonably and cooperatively determined by the Parties to this Agreement and the parties to the Conservation Easement.

13. All notices to either party that may be required or authorized by this Agreement shall be in writing and either deposited in the United States Mail, postage prepaid or personally delivered. The notice shall be effective upon the date of personal delivery or date of mailing. Notices regarding this Agreement shall be sent or delivered to:

    Grantee:
    Placer Land Trust
    Attn: Executive Director
    922 Lincoln Way, Ste. 200
    Auburn, CA 95603

    City:
    City of Rocklin
    Office of the City Manager
    3970 Rocklin Road
    Rocklin, CA 95677

Either party may amend its address for notice by notifying the other party in writing.

14. This Agreement shall inure to the benefit of, and bind the parties hereto, and their successors and assigns, including any and all entities to whom the Property herein referred to may be transferred by reason of incorporation, annexation, unification, consolidation or for any other reason.

15. Grantee acknowledges, understands and agrees that each and every one of its obligations, promises, and consideration set forth in this agreement does and shall constitute an independent condition on which the City's contribution is made and that in the event of Grantee's breach of any term of this Agreement, or failure of Grantee to timely fulfill obligation or promise, Grantee shall return the Grant Funds without delay to the City in their entirety.

16. If any provision of this Agreement, as applicable to either party, or to any other person or circumstance, is for any reason held to be invalid, it shall not affect the

validity of any other provision of this Agreement. The waiver by either party hereto, of any breach, term, covenant or condition contained herein shall not constitute a waiver of any subsequent term, covenant or condition contained herein.

17. This is an integrated Agreement and contains all of the terms, conditions, understandings and promises of the parties. The terms of this Agreement may not be modified except upon the mutual written consent of the parties.

18. This Agreement may be executed in duplicate counterparts. Each counterpart shall be an original and both together shall constitute but one and the same document. This Agreement shall not be deemed executed unless and until at least one counterpart bears the signatures of all parties' designated signatories. In addition, this Agreement and future documents relating to this Agreement may be digitally signed in accordance with California law. Any party to this Agreement may revoke such agreement to permit electronic signatures at any time in relation to all future documents by providing notice pursuant to this Agreement.

IN WITNESS WHEREOF, the parties hereto have caused this Agreement to be executed on behalf of the persons duly authorized by the governing boards of the parties hereto.

Placer Land Trust

By: _____
Its: Executive Director

Date: _____

City of Rocklin

By: _____
Its: Mayor

Date: _____

APPROVED AS TO FORM:
MATTHEW McOMBER
City Attorney

By: _____
Matthew McOmber, City Attorney

ATTEST:

By: _____
Avinta Singh, City Clerk

Exhibit A- 2022 Clover Valley Floor Acquisition (402 acres)

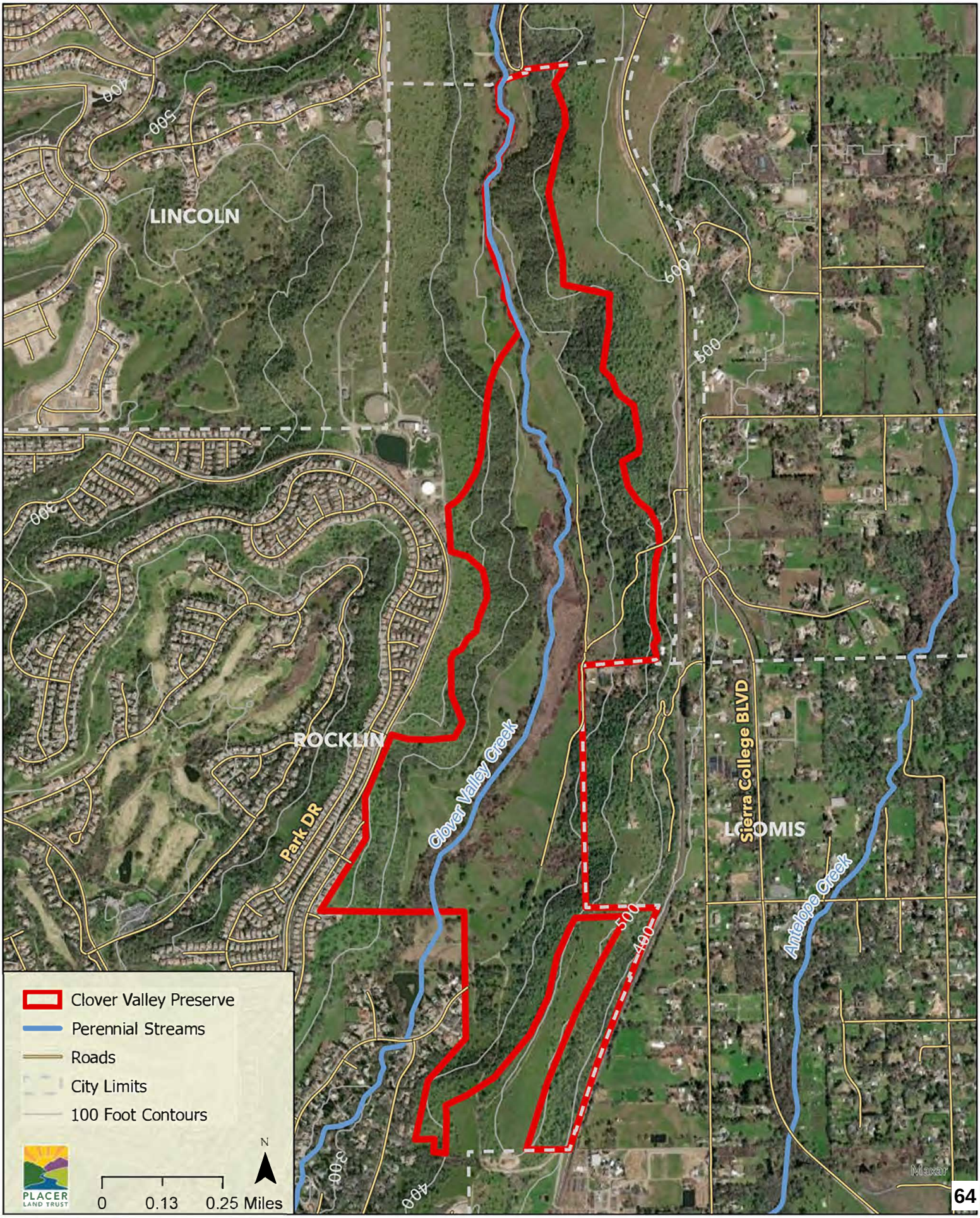

ROCKLIN
CALIFORNIA

City Council Staff Report

Subject: Accounts Paid List - October to December 2024

Date: February 25, 2025

Submitted By: Diane Ahn, Accounting Officer
Daniel Choe, Administrative Services Deputy Director

Department: Administrative Services - Finance

Recommendation:
Receive the Accounts Paid List for October 1, 2024 to December 31, 2024.

Background:
The Accounts Paid List (Attachment 1) details expenses paid to vendors, types of expenses, and the amount paid for the period between October 1, 2024 to December 31, 2024.

Fiscal Impact:
This report will not have a direct fiscal impact. The items included are either within the current year budget or have been approved through budget amendments.

ATTACHMENTS:
1. Accounts Paid Summary

Docusign Envelope ID: F5E38775-E1C8-43EC-A461-F5BE8C35BB6A

City of Rocklin

ACCOUNTS PAID LIST

for

October 01, 2024 through December 31, 2024

meeting of

FEBRUARY 25, 2025

DocuSigned by:
DANEL CHOE
31D843A77E39437...

Deputy Director of Administrative Services

Docusign Envelope ID: F5E38775-E1C8-43EC-A461-F5BE8C35BB6A

City of Rocklin

Accounts Paid Summary

From: 10/1/24 To: 12/31/24

Vendor Name		Total Amount Paid
4LEAF, INC.	PROFESSIONAL SERVICES	4,050.00
A & S MOTORCYCLE PARTS	PROFESSIONAL SERVICES	1,117.55
A.B.M. INTEL, LLC	TRAVEL/TRAINING/MEALS	400.00
ACTIVE911 INC	IT SUBSCRIPTION & MAINTENANCE	737.36
ADAMSON POLICE PRODUCTS	NON-CAP. EQUIPMENT	1,593.77
ADVANCED INTEGRATED PEST MANAGEMENT	IT SUBSCRIPTION & MAINTENANCE	9,897.00
ADVANTAGE GEAR, INC.	NON-CAP. EQUIPMENT	2,044.57
AFSCME DISTRICT COUNCIL 57	PAYROLL DEDUCTS PAYABLE	7,828.17
AIR EXCHANGE INC.	PROGRAM SUPPLIES/MATERIALS	76.24
ALEX FLANDERS	TRAVEL/TRAINING/MEALS	207.61
ALEX SCHNETZ	TRAVEL/TRAINING/MEALS	169.00
ALL MY BEST INC.	PROGRAM SUPPLIES/MATERIALS	702.41
ALLSTAR FIRE EQUIPMENT	NON-CAP. EQUIPMENT	2,833.55
ALY ZIMMERMANN	TRAVEL/TRAINING/MEALS	1,850.56
AMERICAN PAVEMENT SYSTEMS, INC.	INFRASTRUCTURE	2,593.50
AMERICAN RAMP COMPANY	PARK IMPROVEMENTS	547,873.01
ANDRE BOOKER	TRAVEL/TRAINING/MEALS	392.08
ANIMAL DAMAGE MANAGEMENT, INC.	PROFESSIONAL SERVICES	2,860.00
APS ENVIRONMENTAL, INC.	PROFESSIONAL SERVICES	1,050.00
ARC DOCUMENT SOLUTIONS, LLC	RENTAL/LEASE	4,722.87
ARMORED MOBILITY, INC	NON-CAP. EQUIPMENT	17,206.64
AT&T	COMMUNICATIONS	119,189.64
AT&T MOBILITY	COMMUNICATIONS	24,104.66
AVDIS & CUCCHI, LLP	PROFESSIONAL SERVICES	27,000.00
AVI-SPL LLC	IT SUBSCRIPTION & MAINTENANCE	3,181.56
AXON ENTERPRISE, INC.	NON-CAP. EQUIPMENT	7,866.78
BEAR ELECTRICAL SOLUTIONS, LLC	PROPERTY DAMAGE EXPENDITURE	22,616.20
BEN FLINT	TRAVEL/TRAINING/MEALS	229.46
BENNETT ENGINEERING SERVICES	INFRASTRUCTURE	22,920.06
BERCO REDWOOD, INC.	PROGRAM SUPPLIES/MATERIALS	4,960.87
BETTER BUSINESS PLANNING, INC	PROFESSIONAL SERVICES	812.50
BETTS TRUCK PARTS	VEHICLE & EQUIPMENT PARTS	1,141.66
BKF ENGINEERS	PARK IMPROVEMENTS	76,463.90
BLACKBURN CONSULTING	PARK IMPROVEMENTS	95,384.50
BLUE TENT FARMS LLC	PROFESSIONAL SERVICES	232,610.95
BOBCAT COMPANY	VEHICLE & EQUIPMENT PARTS	2,460.53
BONNEVILLE INTERNATIONAL	PROFESSIONAL SERVICES	9,000.00
BOUCHER LAW, PC	PROFESSIONAL SERVICES	4,975.00

Docusign Envelope ID: F5E38775-E1C8-43EC-A461-F5BE8C35BB6A

Vendor Name		Total Amount Paid
BPR CONSULTING GROUP LLC	PROFESSIONAL SERVICES	8,055.61
BRENDAN HIGGINS	TRAVEL/TRAINING/MEALS	372.46
BROWER MECHANICAL INC.	REPAIR & MAINTENANCE	1,035.00
BRUSCA ASSOCIATES, INC.	PROFESSIONAL SERVICES	18,600.00
BUREAU VERITAS NORTH AMERICA INC.	PROFESSIONAL SERVICES	72,910.94
BUSHNELL LANDSCAPE INDUSTRIES, INC.	PROFESSIONAL SERVICES	975.00
CALIFORNIA BUILDING STANDARDS COMMISSION	STATE BLDG STANDARDS FUND	1,623.60
CALIFORNIA CARPET CENTER INC.	FACILITIES REPAIRS AND MAINT	1,405.72
CALIFORNIA CLETS USERS GROUP	LICENSES/MEMBERSHIPS/SUBSCRIP	150.00
CALIFORNIA CRIMINAL JUSTICE WARRANT	LICENSES/MEMBERSHIPS/SUBSCRIP	100.00
CALIFORNIA DEPT OF TAX & FEE ADMINISTRATION	PROGRAM SUPPLIES/MATERIALS	371.00
CALIFORNIA MUNICIPAL STATISTICS, INC.	PROFESSIONAL SERVICES	550.00
CALIFORNIA STATE DEPT OF CONSERV.	SEISMIC EDUCATION LIABILITY	3,937.22
CALIFORNIA STATE DEPT. OF GENERAL SERVICES	CASP SB1186 - STATE PORTION	574.80
CALIFORNIA STATE DEPT. OF JUSTICE	PROFESSIONAL SERVICES	3,372.00
CALIFORNIA SURVEYING & DRAFTING	IT SUBSCRIPTION & MAINTENANCE	475.00
CANINE DEVELOPMENT GROUP, INC	LICENSES/MEMBERSHIPS/SUBSCRIP	140.00
CARAHSOFT TECHNOLOGY CORP	IT SUBSCRIPTION & MAINTENANCE	20,532.83
CARPI & CLAY, INC	PROFESSIONAL SERVICES	20,000.00
CASCADE HEALTHCARE SERVICES LLC	TRAVEL/TRAINING/MEALS	300.00
CD & POWER	PROFESSIONAL SERVICES	11,971.73
CDW GOVERNMENT INC.	IT SUBSCRIPTION & MAINTENANCE	29,594.58
CEB/REGENTS OF THE UNIVERSITY OF CALIF.	PROGRAM SUPPLIES/MATERIALS	2,472.23
CENTRAL VALLEY ENG. & ASPHALT INC.	INFRASTRUCTURE	245,611.98
CENTRALSQUARE TECHNOLOGIES	IT SUBSCRIPTION & MAINTENANCE	45,183.90
CHARLES WILSON	TRAVEL/TRAINING/MEALS	301.00
CHAVAN & ASSOCIATES, LLP	PROFESSIONAL SERVICES	11,400.00
CINTAS CORPORATION	LAUNDRY DEDUCTION PAYABLE	7,173.04
CINTAS FIRST AID & SAFETY	PROFESSIONAL SERVICES	568.08
CITY OF ROSEVILLE	HWY 65 PAYABLE	71,082.40
CIVICA LAW GROUP, APC	PROFESSIONAL SERVICES	15,482.27
CIVICPLUS, LLC	PROGRAM SUPPLIES/MATERIALS	287.50
CLASSIC TOW SERVICE	PROFESSIONAL SERVICES	1,157.00
CLOUDBURST CONSULTING GROUP, INC	PROFESSIONAL SERVICES	1,585.50
COAR DESIGN GROUP	BUILDING	295,644.00
COASTLAND CIVIL ENGINEERING, INC.	INFRASTRUCTURE	52,050.00
COMCAST HOLDINGS CORPORATION	ADVERTISING/PROMOTIONAL	7,617.75
CONSOLIDATED COMMUNICATIONS	COMMUNICATIONS	4,566.95
CONSOLIDATED ENGINEERING, INC	PARK IMPROVEMENTS	379,688.56
CONSOR NORTH AMERICA, INC	INFRASTRUCTURE	5,083.46
CORE PSYCHOLOGICAL CORPORATION	RECRUITMENT EXPENSES	2,000.00
COUNTCO CAPITAL, LLC	RENTAL/LEASE	33,338.23
COURTNEY BELL	TRAVEL/TRAINING/MEALS	428.72

Docusign Envelope ID: F5E38775-E1C8-43EC-A461-F5BE8C35BB6A

Vendor Name		Total Amount Paid
CRAFCO, INC.	PROGRAM SUPPLIES/MATERIALS	10,368.25
CROSS CONNECTIONS EMERGENCY SERVICES INC	PROGRAM SUPPLIES/MATERIALS	743.26
CSG CONSULTANTS INC.	PROFESSIONAL SERVICES	2,522.50
CURTIS BLUE LINE	UNIFORMS	21,790.82
CYRACOM INTERNATIONAL , INC	PROFESSIONAL SERVICES	218.40
DANIEL NELSON	TRAVEL/TRAINING/MEALS	352.00
DANIEL ROBERT CHIPP	PROFESSIONAL SERVICES	1,000.00
DAVE BANG ASSOCIATES INC OF CALIFORNIA	PROGRAM SUPPLIES/MATERIALS	2,140.96
DELL	IT SUBSCRIPTION & MAINTENANCE	39,966.51
DELTA REGIONAL MONITORING PROGRAM	LICENSES/MEMBERSHIPS/SUBSCRIP	20,600.00
DISCOVERY DOOR, INC.	REPAIR & MAINTENANCE	2,039.00
DOKKEN ENGINEERING	INFRASTRUCTURE	55,627.50
DOMINGUEZ LANDSCAPE SERVICES INC.	PROFESSIONAL SERVICES	409,169.61
DOWNEY BRAND LLP	PROFESSIONAL SERVICES	285,657.74
EASTER SEALS SUPERIOR CALIFORNIA	PROFESSIONAL SERVICES	5,011.72
ECONOMIC AND PLANNING SYSTEMS, INC.	PROFESSIONAL SERVICES	8,870.00
EDCO ENTERPRISES	PARK IMPROVEMENTS	1,600.00
EDGES ELECTRICAL GROUP, LLC	PROGRAM SUPPLIES/MATERIALS	3,549.98
ELIZABETH SORG	TRAVEL/TRAINING/MEALS	274.78
ENTENMANN-ROVIN COMPANY	UNIFORMS	261.35
ESIQUIO CURIEL	PAYROLL DEDUCTS PAYABLE	646.16
ETHOS- VETERINARY HEALTH LLC	PROFESSIONAL SERVICES	150.00
FBI-LEEDA, INC.	TRAVEL/TRAINING/MEALS	2,385.00
FEDEX	POSTAGE	102.06
FEHR & PEERS	PROFESSIONAL SERVICES	26,995.10
FFP FUND VIII CEI PARTNERSHIP, LLC	UTILITIES	76,752.69
FIRECODE SAFETY EQUIPMENT, INC.	REPAIR & MAINTENANCE	850.00
FIRST AMERICAN ADMINISTRATORS INC	VISION CLAIM	6,482.03
FIRST AMERICAN TITLE COMPANY	MISCELLANEOUS EXP.	1,928.60
FLOCK GROUP INC	IT SUBSCRIPTION & MAINTENANCE	25,125.00
FOOTHILL FIRE PROTECTION, INC.	REPAIR & MAINTENANCE	910.00
FRANCHISE TAX BOARD	PAYROLL DEDUCTS PAYABLE	1,784.77
FUTURE CHEVROLET OF SACRAMENTO	PROFESSIONAL SERVICES	16,462.82
FUTURE FORD LINCOLN	PROFESSIONAL SERVICES	15,005.37
GABRIELLE DE FARCY	TRAVEL/TRAINING/MEALS	94.75
GARRITT H. WALSH (SELECT ELECTRIC)	PROFESSIONAL SERVICES	10,041.00
GAYNOR TELESYSTEMS, INC	REPAIR & MAINTENANCE	2,874.17
GENUINE PARTS CO	VEHICLE & EQUIPMENT PARTS	17,478.95
GHIRARDELLI ASSOCIATES, INC.	INFRASTRUCTURE	46,991.76
GOLDEN STATE EMERGENCY VEHICLE SERVICE INC.	VEHICLE & EQUIPMENT PARTS	3,272.73
GOLDEN STATE FIRE APPARATUS, INC.	FLEET CAPITAL	94,801.51
GOVERNMENTJOBS.COM, INC	RECRUITMENT EXPENSES	11,941.70
GREG JANDA	TRAVEL/TRAINING/MEALS	382.54

Docusign Envelope ID: F5E38775-E1C8-43EC-A461-F5BE8C35BB6A

Vendor Name		Total Amount Paid
GREG JENSEN	TRAVEL/TRAINING/MEALS	869.36
GREG M. STENSLER	TRAVEL/TRAINING/MEALS	199.50
GREGORY TAWNEY (D-TAC K9 LLC)	PROFESSIONAL SERVICES	2,400.00
GYMDOC, INC.	IT SUBSCRIPTION & MAINTENANCE	441.04
HALEY REID	TRAVEL/TRAINING/MEALS	292.24
HDL COREN & CONE	PROFESSIONAL SERVICES	4,295.00
HERC EXCHANGE LLC	RENTAL/LEASE	5,389.48
HERITAGE LANDSCAPE SUPPLY GROUP	PROGRAM SUPPLIES/MATERIALS	25,528.16
HEURISTIC MANAGEMENT SYSTEMS INC.	IT SUBSCRIPTION & MAINTENANCE	7,560.00
HI-TECH EMERGENCY VEHICLE SERVICE	VEHICLE & EQUIPMENT PARTS	4,038.33
HOIST FITNESS SYSTEM INC	MACHINERY & EQUIPMENT	9,025.59
HOLT OF CALIFORNIA	RENTAL/LEASE	42,215.79
HOMELESS RESOURCE COUNCIL OF THE SIERRAS	IT SUBSCRIPTION & MAINTENANCE	950.00
HOMEWOOD BUILDING SUPPLY, LLC	PROGRAM SUPPLIES/MATERIALS	139.57
HORIZON VENTURES INC	PROGRAM SUPPLIES/MATERIALS	1,083.80
HUNT & SONS INC.	FUEL/OIL	57,439.63
IAFF ROCKLIN FIREFIGHTERS	PAYROLL DEDUCTS PAYABLE	10,835.00
IMAGETREND, INC	IT SUBSCRIPTION & MAINTENANCE	2,140.00
INFINITY TECHNOLOGIES	PROFESSIONAL SERVICES	4,561.25
INTERNATIONAL ASSOC OF CHIEFS OF POLICE	LICENSES/MEMBERSHIPS/SUBSCRIP	220.00
INTERNATIONAL ASSOCIATION FOR IDENTIFICATION	LICENSES/MEMBERSHIPS/SUBSCRIP	95.00
INT'L CONFERENCE OF POLICE CHAPLAINS	LICENSES/MEMBERSHIPS/SUBSCRIP	150.00
IO PREDICT INC	RECRUITMENT EXPENSES	75.00
IVAN RODRIGUEZ	TRAVEL/TRAINING/MEALS	521.99
J & A STEAM, LLC	PROFESSIONAL SERVICES	5,900.00
J.J.R. ENTERPRISES, INC	PROGRAM SUPPLIES/MATERIALS	12,589.22
JACOBS ENGINEERING GROUP, INC.	INFRASTRUCTURE	797,398.52
JAMIE SARTAIN	PROGRAM SUPPLIES/MATERIALS	57.12
JASON SHEARER	RET HEALTH PAYGO INSURANCE	1,698.00
JB BOSTICK CO.	PROFESSIONAL SERVICES	3,945.00
JEFF FUCHS (CNW CONSTRUCTION)	BUILDING	1,003,328.25
JEFFREY WALLOCH	RET HEALTH PAYGO INSURANCE	531.00
JILL GAYALDO	TRAVEL/TRAINING/MEALS	1,913.07
JMP OFFICE TECHNOLOGIES	IT SUBSCRIPTION & MAINTENANCE	1,012.20
JOBELEPHANT.COM INC	RECRUITMENT EXPENSES	5,325.95
JOHN G ROBY (SIRCHIE ACQUISITION CO LLC)	PROGRAM SUPPLIES/MATERIALS	790.28
JOHN SCHAAD	TRAVEL/TRAINING/MEALS	305.00
JOHNSON & SAMPSON CONSTRUCTION, INC.	PROFESSIONAL SERVICES	27,010.00
JOHNSON PETROLEUM CONSTRUCTION INC.	PROFESSIONAL SERVICES	2,255.33
JON HARTMAN	INSTRUCTIONAL SERVICES	6,818.50
JUAN GARCIA, JR (JG ACOUSTICS)	REPAIR & MAINTENANCE	4,465.00
JULIE ERVIN	TRAVEL/TRAINING/MEALS	38.99
JUSTIN NARTKER	TRAVEL/TRAINING/MEALS	113.25

Docusign Envelope ID: F5E38775-E1C8-43EC-A461-F5BE8C35BB6A

Vendor Name		Total Amount Paid
KESTER CONSULTING CORPORATION	PROFESSIONAL SERVICES	385.00
KEVIN STENSON	NON-CAP. EQUIPMENT	230.00
KEYSER MARSTON ASSOCIATES, INC.	PROFESSIONAL SERVICES	9,441.25
KIMLEY-HORN AND ASSOCIATES INC.	INFRASTRUCTURE	26,447.43
KIRSTEN BADERSCHER	TRAVEL/TRAINING/MEALS	23.72
KNOWBE4, INC	TRAVEL/TRAINING/MEALS	6,706.80
KNOX COMPANY	IT SUBSCRIPTION & MAINTENANCE	1,298.00
KOEFRAN INDUSTRIES, INC.	PROFESSIONAL SERVICES	250.00
KOYE MCGUIRE (MCGUIRE & HESTER)	REPAIR & MAINTENANCE	935.00
KP RESEARCH SERVICES, INC	PROFESSIONAL SERVICES	1,940.00
KRISTOPHER GIBSON	TRAVEL/TRAINING/MEALS	401.00
KRONICK MOSKOVITZ TIEDEMANN & GIRARD	PROFESSIONAL SERVICES	4,898.00
L.N. CURTIS & SONS	NON-CAP. EQUIPMENT	357.14
LAURA DEASON (COLE PRO MEDIA GROUP)	PROFESSIONAL SERVICES	6,000.00
LAW OFFICES OF LIEBERT CASSIDY & WHITMOR	PROFESSIONAL SERVICES	15,850.00
LAWRENCE J. OSBORNE (ELEPHANT IDEAS)	PROGRAM SUPPLIES/MATERIALS	96.61
LC ACTION POLICE SUPPLY	NON-CAP. EQUIPMENT	4,465.96
LEAGUE OF CALIFORNIA CITIES	RECRUITMENT EXPENSES	600.00
LEGAL DEFENSE FUND OF THE PEACE OFFICERS RESEARCH	RESERVE OFFICER EXPENSE	48.00
LEGAL SHIELD	PAYROLL DEDUCTS PAYABLE	1,027.96
LEHR AUTO ELECTRIC INC.	FLEET CAPITAL	201,884.99
LES SCHWAB TIRE CENTER	PROFESSIONAL SERVICES	265.47
LEXISNEXIS	PROFESSIONAL SERVICES	5,259.24
LIFE-ASSIST INC	PROGRAM SUPPLIES/MATERIALS	6,308.45
LIONAKIS	BUILDING	1,453.00
LISA CONDON	TRAVEL/TRAINING/MEALS	278.00
LRG TECHNOLOGIES LLC	FLEET CAPITAL	84,630.98
LSA ASSOCIATES, INC.	PARK IMPROVEMENTS	14,170.03
LUMOS & ASSOCIATES, INC.	INFRASTRUCTURE	27,219.50
M & M ELECTRIC	PROPERTY DAMAGE EXPENDITURE	4,516.05
M.A.K. ASSOCIATES INC.	PROFESSIONAL SERVICES	3,210.00
MAGELLAN HEALTHCARE, INC	PROFESSIONAL SERVICES	8,048.76
MALLORY SAFETY AND SUPPLY LLC	PROGRAM SUPPLIES/MATERIALS	9,791.79
MARK THOMAS & COMPANY, INC.	INFRASTRUCTURE	20,113.75
MAVERICK NETWORKS, INC.	NON-CAP. EQUIPMENT	602.05
MCMASTER-CARR	PROGRAM SUPPLIES/MATERIALS	583.38
MICHAEL DOVGAN (A PLUS PAINTING)	PROJECT RETENTION	4,400.00
MICHAEL PETERSON (BUILDING CONCEPTS)	PROJECT RETENTION	4,291.35
MIKE DAVIS (FOUR STAR BUILDING)	PROFESSIONAL SERVICES	22,480.50
MILLER PLANNING ASSOCIATES	PROFESSIONAL SERVICES	40,043.50
MIRACLE PLAYSYSTEMS, INC.	PROGRAM SUPPLIES/MATERIALS	14,808.93
MIWALL CORPORATION	PROGRAM SUPPLIES/MATERIALS	27,977.24
MONIQUE GILLETTE	PRPD EXPENSE	7,752.60

Docusign Envelope ID: F5E38775-E1C8-43EC-A461-F5BE8C35BB6A

Vendor Name		Total Amount Paid
MOST DEPENDABLE FOUNTAINS	PROGRAM SUPPLIES/MATERIALS	13,628.75
MOTOROLA SOLUTIONS, INC.	NON-CAP. EQUIPMENT	466,260.63
MUNICIPAL EMERGENCY SERVICES, INC.	REPAIR & MAINTENANCE	6,259.90
MUNICIPAL MAINTENANCE EQUIPMENT	VEHICLE & EQUIPMENT PARTS	565.94
MUNICIPAL RESOURCE GROUP LLC	PROFESSIONAL SERVICES	5,020.00
NATE ANDERSON	TRAVEL/TRAINING/MEALS	449.20
NATHAN WHANN	TRAVEL/TRAINING/MEALS	744.02
NATIONAL ACADEMY OF ATHLETICS	INSTRUCTIONAL SERVICES	3,494.40
NATIONAL GARAGE DOOR	REPAIR & MAINTENANCE	1,800.00
NEARMAP US INC	IT SUBSCRIPTION & MAINTENANCE	9,165.16
NEIL COSTA	TRAVEL/TRAINING/MEALS	301.00
NETWORK DESIGN ASSOCIATES	PROFESSIONAL SERVICES	31,368.75
NI GOVERNMENT SERVICES INC.	COMMUNICATIONS	100.65
NICHOLS CONSULTING ENGINEERS, CHTD	PROFESSIONAL SERVICES	38,320.87
NOREGON SYSTEMS LLC	IT SUBSCRIPTION & MAINTENANCE	2,199.00
NORTHERN CALIF CITIES SELF INS FUND	WORKERS COMP INS PREMIUMS	553,341.00
NUTRIEN AG SOLUTIONS, INC.	PROGRAM SUPPLIES/MATERIALS	3,915.97
OCCU-MED, LTD.	RECRUITMENT EXPENSES	2,025.00
OCEAN SHORE PRINTING	GENERAL OFFICE SUPPLIES	317.14
ONE TIME PAY	REFUND PAYABLE	22,268.06
ONELLY OLIVAS-PEREZ	TRAVEL/TRAINING/MEALS	301.00
OUTDOOR LIGHTING PERSPECTIVE OF SIERRA FOOTHILLS	PROFESSIONAL SERVICES	1,002.33
PACIFIC GAS & ELECTRIC CO.	INFRASTRUCTURE	686,931.92
PDQ INTERMEDIATE INC	IT SUBSCRIPTION & MAINTENANCE	4,016.25
PEACE OFFICERS RESEARCH ASSOCIATION OF CA	RESERVE OFFICER EXPENSE	24.00
PEDIATRIC EMERGENCY STANDARDS, INC	PROGRAM SUPPLIES/MATERIALS	30.00
PETDATA	PROFESSIONAL SERVICES	2,895.00
PK AUTOMATE INC	PROGRAM SUPPLIES/MATERIALS	11,958.70
PLACER COUNTY ADMINISTRATIVE OFFICES	COUNTY IMPACT FEE	156,618.58
PLACER COUNTY AIR POLLUTION CONTROL DISTRICT	LICENSES/MEMBERSHIPS/SUBSCRIP	35,804.50
PLACER COUNTY CLERK-RECORDER	ADVERTISING/PROMOTIONAL	60.50
PLACER COUNTY DISTRICT ATTORNEY	PROFESSIONAL SERVICES	3,900.00
PLACER COUNTY ENVIRONMENTAL HEALTH	PROFESSIONAL SERVICES	1,338.00
PLACER COUNTY FLOOD CONTROL & CONSERVATION	FLOOD DISTRICT LIABILITY	3,045.00
PLACER COUNTY HEALTH & HUMAN SERVICES	PROFESSIONAL SERVICES	84,263.00
PLACER COUNTY MULTI-DISCIPLINARY INTERVIEW	PROFESSIONAL SERVICES	5,000.00
PLACER COUNTY OFFICE OF EMERGENCY SERVICES	LICENSES/MEMBERSHIPS/SUBSCRIP	7,948.60
PLACER COUNTY PUBLIC WORKS DEPARTMENT	PROFESSIONAL SERVICES	267,622.50
PLACER COUNTY TRANSPORTATION PLANNING AGENCY	PROFESSIONAL SERVICES	75,000.00
PLACER COUNTY WATER AGENCY	UTILITIES	609,892.72
PLAYPOWER LT FARMINGTON INC.	PROGRAM SUPPLIES/MATERIALS	2,017.08
POINT EMBLEMS LLC	ADVERTISING/PROMOTIONAL	1,454.43
POLICY CONFLUENCE, INC	PROFESSIONAL SERVICES	23,500.00

Docusign Envelope ID: F5E38775-E1C8-43EC-A461-F5BE8C35BB6A

Vendor Name		Total Amount Paid
PRIDE INDUSTRIES ONE INC.	PROFESSIONAL SERVICES	158,059.14
PRIETO ROSEVILLE	VEHICLE & EQUIPMENT PARTS	4,674.57
PROFORCE LAW ENFORCEMENT	NON-CAP. EQUIPMENT	9,436.40
PROGRESS SOFTWARE CORPORATION	IT SUBSCRIPTION & MAINTENANCE	2,142.40
PROSPERO BENEFITS GROUP	PROFESSIONAL SERVICES	150.00
PSOMAS	PROFESSIONAL SERVICES	10,737.50
Q-FREE/INTELIGHT	IT SUBSCRIPTION & MAINTENANCE	39,107.87
R3 CONSULTING GROUP INC	PROFESSIONAL SERVICES	2,544.50
RDO EQUIPMENT CO	VEHICLE & EQUIPMENT PARTS	99.33
REGINALD WILLIAMS	TRAVEL/TRAINING/MEALS	402.25
RELIANT CONSTRUCTION INC	FACILITIES REPAIRS AND MAINT	66,561.99
REWORLD SOLUTIONS, LLC	PROFESSIONAL SERVICES	429.10
RICHARD GOLD	TRAVEL/TRAINING/MEALS	192.48
RICK LAWRENCE	MISCELLANEOUS EXP.	54.15
RIVERVIEW INTERNATIONAL TRUCKS	VEHICLE & EQUIPMENT PARTS	2,032.51
ROBBINS & HOLDAWAY, A PROF. CORP.	PROFESSIONAL SERVICES	2,460.00
ROCKLIN CHAMBER OF COMMERCE	SIGN DEPOSITS	500.00
ROCKLIN GLASS & MIRROR, INC.	NON-CAP. EQUIPMENT	5,475.63
ROCKLIN POLICE OFFICERS ASSOCIATION	PAYROLL DEDUCTS PAYABLE	26,857.92
RSC ENGINEERING, INC.	PARK IMPROVEMENTS	42,112.57
RUSSELL SCHERMERHORN	TRAVEL/TRAINING/MEALS	184.47
RUSTIN BANKS	TRAVEL/TRAINING/MEALS	508.89
RYAN BRAYTON	TRAVEL/TRAINING/MEALS	500.50
SACRAMENTO REGIONAL PUBLIC SAFETY	TRAVEL/TRAINING/MEALS	617.50
SAFETY-KLEEN SYSTEMS, INC.	IT SUBSCRIPTION & MAINTENANCE	138.50
SAN DIEGO POLICE EQUIPMENT CO INC	PROGRAM SUPPLIES/MATERIALS	6,930.50
SANTA ROSA JUNIOR COLLEGE	TRAVEL/TRAINING/MEALS	66.50
SARAH WALTON	TRAVEL/TRAINING/MEALS	798.69
SCOTT'S PPE RECON	REPAIR & MAINTENANCE	5,676.21
SDI PRESENCE LLC	PROFESSIONAL SERVICES	18,485.00
SEARCH AMERICA, LLC	IT SUBSCRIPTION & MAINTENANCE	439.80
SECURITY & ASSET MANAGEMENT, LP	IT SUBSCRIPTION & MAINTENANCE	4,289.44
SEDGWICK CLAIMS MANAGMENT SERVICES INC	PROPERTY DAMAGE EXPENDITURE	1,273.14
SEEVERS JORDAN ZIEGENMEYER	PROFESSIONAL SERVICES	3,000.00
SENIORS FIRST, INC.	PROFESSIONAL SERVICES	4,738.04
SHAWN BAIRD	TRAVEL/TRAINING/MEALS	433.02
SHAWN WATKINS	TRAVEL/TRAINING/MEALS	320.76
SHI INTERNATIONAL CORP.	IT SUBSCRIPTION & MAINTENANCE	9,911.20
SHUMS CODA ASSOCIATES, INC	PROFESSIONAL SERVICES	10,302.14
SIERRA PACIFIC TURF SUPPLY INC.	PROGRAM SUPPLIES/MATERIALS	1,474.69
SIGN SOLUTIONS USA LLC	PROGRAM SUPPLIES/MATERIALS	3,483.16
SITEWISE CONSTRUCTION INC	PARK REPAIR & MAINT NON-CAP EX	12,015.00
SLOAN SAKAI YOUNG & WONG LLP	PROFESSIONAL SERVICES	2,492.90

Docusign Envelope ID: F5E38775-E1C8-43EC-A461-F5BE8C35BB6A

Vendor Name		Total Amount Paid
SMITHWAY ASSOCIATES, INC	RENTAL/LEASE	2,841.66
SOUTH PLACER M.U.D.	UTILITIES	10,309.14
SOUTH PLACER REGIONAL	SPRTA MITIGATION FEES	269,064.15
ST VINCENT DE PAUL SOCIETY ROSEVILLE AREA CONF	PROFESSIONAL SERVICES	3,718.10
STACIE FORD (BORN TO DANCE)	INSTRUCTIONAL SERVICES	318.50
STAND UP PLACER, INC	PROFESSIONAL SERVICES	4,719.17
STATE WATER RESOURCES CONTROL BOARD	LICENSES/MEMBERSHIPS/SUBSCRIP	27,293.00
STATEWIDE TRAFFIC SAFETY AND SIGNS, INC	PROGRAM SUPPLIES/MATERIALS	4,841.44
STERICYCLE, INC	PROFESSIONAL SERVICES	1,153.35
STRYKER CORPORATION	NON-CAP. EQUIPMENT	959.69
SUNBELT RENTALS INC.	RENTAL/LEASE	3,738.92
SWARCO MCCAIN, INC	PROGRAM SUPPLIES/MATERIALS	7,557.93
SYMBOL ARTS	PROGRAM SUPPLIES/MATERIALS	1,299.76
SYN-TECH SYSTEMS, INC	VEHICLE & EQUIPMENT PARTS	638.65
SYTECH SOLUTIONS	PROFESSIONAL SERVICES	8,300.00
TAMEKA USHER	TRAVEL/TRAINING/MEALS	213.61
TARYN PURPURA	RECRUITMENT EXPENSES	35.00
TAT-YIK JARVIS KA	IT SUBSCRIPTION & MAINTENANCE	4,997.58
TERRI RUGGERI	INSTRUCTIONAL SERVICES	2,808.00
TESCO CONTROLS INC.	REPAIR & MAINTENANCE	37,794.91
TETRA TECH, INC.	PROFESSIONAL SERVICES	5,239.76
THE BACKFLOW DEPOT	PROGRAM SUPPLIES/MATERIALS	1,954.03
THE GOODYEAR TIRE & RUBBER COMPANY	VEHICLE & EQUIPMENT PARTS	14,911.03
THE GUMSHOE GROUP, LLC	RECRUITMENT EXPENSES	2,000.00
THE SALVATION ARMY	PROFESSIONAL SERVICES	5,395.00
THE SMITH COMPANY, INC.	PROGRAM SUPPLIES/MATERIALS	180.00
THOMAS E JONES (SIERRA HILLS FRAMING)	ADVERTISING/PROMOTIONAL	758.25
THOMSON-REUTERS WEST	IT SUBSCRIPTION & MAINTENANCE	248.07
THURMOND CONSULTING LLC	PROFESSIONAL SERVICES	12,100.00
THYSSEN-KRUPP ELEVATOR	IT SUBSCRIPTION & MAINTENANCE	1,948.88
TIM R. STEVENSON (ATLAS WELDCO)	PROFESSIONAL SERVICES	1,968.75
TIMOTHY D. GLISSMAN (GLISSMAN EXCAVATING)	PROFESSIONAL SERVICES	4,900.00
TIMOTHY SHERRILL	TRAVEL/TRAINING/MEALS	199.50
TKE ENGINEERING, INC	PROFESSIONAL SERVICES	370.00
T-MOBILE USA, INC	PROFESSIONAL SERVICES	50.00
TRAFFIC & PARKING CONTROL CO, INC.	PROGRAM SUPPLIES/MATERIALS	6,664.80
TRANSUNION RISK & ALTERNATIVE DATA SOLUTIONS INC	IT SUBSCRIPTION & MAINTENANCE	1,459.17
TREE PRO TREE SERVICES INC	PROFESSIONAL SERVICES	31,909.13
TREE TRUCKS INC	RENTAL/LEASE	1,850.00
TRISTAN GIBSON	TRAVEL/TRAINING/MEALS	301.00
TRUCKSMART INC	VEHICLE & EQUIPMENT PARTS	80.44
TYLER RAE	TRAVEL/TRAINING/MEALS	196.71
TYLER TECHNOLOGIES INC.	IT SUBSCRIPTION & MAINTENANCE	21,889.78

Docusign Envelope ID: F5E38775-E1C8-43EC-A461-F5BE8C35BB6A

Vendor Name		Total Amount Paid
U.S. BANK NATIONAL ASSOCIATION	FUEL/OIL	29,879.33
UBORA ENGINEERING & PLANNING	PROFESSIONAL SERVICES	14,025.00
ULTRA LINK CABLING SYSTEMS, INC.	PROFESSIONAL SERVICES	2,063.17
UNICO ENGINEERING, INC.	INFRASTRUCTURE	51,932.48
UNION PACIFIC RAILROAD COMPANY	RENTAL/LEASE	1,425.76
UNITED OF OMAHA LIFE INSURANCE COMPANY	PAYROLL DEDUCTS PAYABLE	21,966.86
VALLEY POWER SYSTEMS INC.	VEHICLE & EQUIPMENT PARTS	1,646.01
VALLEY ROCK LANDSCAPE MATERIAL	PROGRAM SUPPLIES/MATERIALS	150.39
VCA ANIMAL HOSPITALS, INC	PROFESSIONAL SERVICES	610.55
VEALE OUTDOOR ADVERSTISING	RECRUITMENT EXPENSES	3,250.00
VERIZON BUSINESS	COMMUNICATIONS	204.50
VERIZON WIRELESS	COMMUNICATIONS	18,382.09
VERIZON WIRELESS SERVICES, LLC	PROFESSIONAL SERVICES	75.00
VERONICA TRACY	TRAVEL/TRAINING/MEALS	301.00
VOLLMAR NATURAL LANDS CONSULTING	PROFESSIONAL SERVICES	9,365.00
VORTEX INDUSTRIES, INC.	REPAIR & MAINTENANCE	637.30
V-POWER EQUIPMENT, INC.	PARK REPAIR & MAINT NON-CAP EX	3,697.98
WALKER'S OFFICE SUPPLIES	NON-CAP. EQUIPMENT	5,095.83
WATERWORKS AQUATIC MANAGEMENT, INC.	PROFESSIONAL SERVICES	2,000.00
WAVE BROADBAND	COMMUNICATIONS	60,661.63
WAVELENGTH AUTOMATION, INC	IT SUBSCRIPTION & MAINTENANCE	1,548.00
WAXIE SANITARY SUPPLY	PROGRAM SUPPLIES/MATERIALS	2,834.43
WBCP, INC	PROFESSIONAL SERVICES	8,900.00
WENDY SMITH	TRAVEL/TRAINING/MEALS	151.42
WEST YOST & ASSOCIATES INC.	PROFESSIONAL SERVICES	4,508.00
WESTERN CITY MAGAZINE	RECRUITMENT EXPENSES	300.00
WESTERN SYSTEMS, INC	PROGRAM SUPPLIES/MATERIALS	4,241.57
WHITE CAP SUPPLY HOLDINGS II, LLC	PROGRAM SUPPLIES/MATERIALS	510.19
WHITLOCK & WEINBERGER TRANSPORTATION, INC.	PROFESSIONAL SERVICES	21,167.95
WILLDAN FINANCIAL SERVICES	PROFESSIONAL SERVICES	20,979.22
WINNER CHEVROLET, INC.	FLEET CAPITAL	54,410.09
WITTMAN ENTERPRISES, LLC	PROFESSIONAL SERVICES	136.00
WOLSELEY INVESTMENTS INC	PROGRAM SUPPLIES/MATERIALS	278.67
ZAP MANUFACTURING INC.	PROGRAM SUPPLIES/MATERIALS	815.43
ZUMAR INDUSTRIES INC.	PROGRAM SUPPLIES/MATERIALS	3,810.82
US BANK	OCT, NOV, DEC CALCARD PAYMENT	320,240.36
	Total:	$11,317,227.95

ROCKLIN
CALIFORNIA

City Council Staff Report

Subject: Annual Comprehensive Financial Report and GANN Appropriations Limit Schedule for the Fiscal Year ended June 30, 2024

Date: February 25, 2025

Submitted By: Diane Ahn, Accounting Officer
Daniel Choe, Administrative Services Deputy Director

Department: Administrative Services - Finance

Recommendation:
Adopt a Resolution of the City Council of the City of Rocklin Accepting the Annual Comprehensive Financial Report and GANN Appropriations Limit Schedule for the Fiscal Year Ended June 30, 2024.

Background:
Rocklin Municipal Code, Title 2, Section 2.28.030, requires an annual audit of all City financial transactions by an independent auditor and the submission of an audit report to the City Council. Additionally, California Constitution Article XIIIB Section 1.5 requires a review of the annual appropriations limit (GANN) as part of an annual financial audit.

The City contracted with Chavan & Associates LLP, a firm of Certified Public Accountants licensed to practice in the State of California, to perform the annual independent audit and prepare the Annual Comprehensive Financial Report (ACFR) (Attachment 2). The following are the financial highlights for the fiscal year ended June 30, 2024, as reported in the ACFR.

Government-Wide
As of the close of Fiscal Year (FY) 2023/24, the City's assets and deferred outflows exceeded its total liabilities and deferred inflows by $427.9 million, reflecting an increase of $7.5 million (1.8%) from previous year's $420.3 million. This net position serves as an indicator of the City's overall financial health and ability to meet future obligations.

The City's Government-Wide General Revenues increased by 10.2%, from $74.6 million to $82.2 million. These revenues come from sources such as property tax, sales and use tax, gas tax, transient occupancy tax, motor vehicle fees, franchise fees, impact fees, investment earnings, and other revenues. In FY 2023/24, property taxes increased by 5.2%, sales tax and use tax by 9.5%, impact fees by 157.5%, and investment earnings by 94.8%. Program Revenues – which includes fees and grants tied to specific services – declined by 16.5% ($3.8 million) from the prior year.

The City's Government-Wide expenses increased by 7% from $87.8 million to $93.9 million. This rise is attributed to the cost of providing essential services, maintaining infrastructure, and other operational needs. Despite the increase, the City's overall financial position remains stable.

General Fund

General Fund revenues for FY 2023/24 totaled $68 million, while expenditures amounted to $66.1 million. The General Fund received $5.9 million in transfers from other funds and transferred $0.56 million to other funds, resulting in a net increase of $7.3 million in the fund balance. This growth was driven by higher revenues from property tax, sales and use tax, and interest earnings, along with salary savings and lower spending on infrastructure projects.

Financial Audit

The auditor's letters to the City Council (Attachments 4 and 5) are required by audit standards, and they convey there were no difficulties encountered performing the audit or disagreements between the auditors and City staff, upcoming accounting pronouncements, and other information relative to the audited financial statements.

GANN Appropriations Limit

Under Article XIIIB of the California Constitution (the GANN Spending Limitations Initiative), California governmental agencies are restricted in the amount of annual appropriations derived from tax proceeds. Section 1.5 of Article XIIB, effective July 1, 1990, requires a limited procedures review of the appropriation limit as part of the annual audit. The audits for the fiscal year ending June 30, 2024 reviewed the City's GANN Appropriation Limit Schedule, and no exceptions were noted (Attachment 3).

Staff recommends the City Council accept the ACFR and GANN Appropriations Limit Schedule for the fiscal year ended June 30, 2024, and the auditor's letters to the City Council for the following reasons:

- An annual audit is required by the Rocklin Municipal Code, and federal and state grant requirements.
- The public accounting firm of Chavan & Associates, LLP has audited the City's FY 2023/24 financial statements and has issued an unqualified ("clean") auditor's opinion that the financial statements are fairly presented in accordance with generally accepted accounting principles, as well as there were no reported material weaknesses or significant deficiencies.
- The auditor's letters to the City Council reflects no significant audit issues or disagreements with management relative to the audit.
- Chavan & Associates, LLP has reviewed the GANN appropriations limit for the fiscal year ended June 30, 2024, per established procedures, and no exceptions were noted.

Fiscal Impact:

There is no direct fiscal impact to the General Fund from the staff recommendation.

ATTACHMENTS:

1. Resolution
2. Resolution Exhibit A - ACFR
3. Resolution Exhibit B - GANN Appropriations Limit
4. Governance Communication
5. Management Letter

RESOLUTION NO. 2025-

RESOLUTION OF THE CITY COUNCIL OF THE CITY OF ROCKLIN ACCEPTING THE ANNUAL COMPREHENSIVE FINANCIAL REPORT AND GANN APPROPRIATIONS LIMIT SCHEDULE FOR THE FISCAL YEAR ENDED JUNE 30, 2024

WHEREAS, Chavan & Associates LLP performed an independent financial audit for the City of Rocklin for fiscal year ended June 30, 2024, and prepared the Annual Comprehensive Financial Report (ACFR); and

WHEREAS, Chavan & Associates LLP has issued an unqualified ("clean") auditor's opinion, with no reported material weaknesses or significant deficiencies; and

WHEREAS, Chavan & Associates LLP reviewed the (GANN) appropriations limit for the fiscal year ended June 30, 2024, per established procedures, and no exceptions were noted.

NOW THEREFORE, BE IT RESOLVED by the City Council of the City of Rocklin as follows:

Section 1. The Annual Comprehensive Financial Statements and Gann Appropriations Limit Schedule for the fiscal year ended June 30, 2024, attached hereto as Exhibit "A" and Exhibit "B," are accepted.

PASSED AND ADOPTED this 25th day of February, 2025, by the following vote:

AYES: Councilmembers:
NOES: Councilmembers:
ABSENT: Councilmembers:
ABSTAIN: Councilmembers:

_____
Jill Gayaldo, Mayor

ATTEST:

_____
Avinta Singh, City Clerk

ANNUAL COMPREHENSIVE FINANCIAL REPORT

FOR THE FISCAL YEAR ENDED JUNE 30, 2024

130 YEARS
1893 ROCKLIN 2023
CALIFORNIA
ANNIVERSARY

This page is intentionally blank

Annual Comprehensive Financial Report

For the Fiscal Year Ended June 30, 2024

Prepared by
ADMINISTRATIVE SERVICES DEPARTMENT
FINANCE DIVISION

Daniel Choe, Deputy Director of Administrative Services/City Treasurer
Diane Ahn, Accounting Officer
Angela Doyle, Senior Accountant

In conjunction with Department Staff

ROCKLIN
CALIFORNIA

Page Intentionally Left Blank

ROCKLIN
CALIFORNIA

Vision Statement

To become a city that provides its citizens with exceptional quality of life, while maintaining its small town sense of community.

This page is intentionally blank

TABLE OF CONTENTS

INTRODUCTORY SECTION
Transmittal Letter 1
Organizational Chart 5
Directory of City Officials 6
Location Map 7

FINANCIAL SECTION
Independent Auditor's Report 11
Management's Discussion and Analysis (Required Supplementary Information) 16

Basic Financial Statements:
Government-Wide Financial Statements:
Statement of Net Position 29
Statement of Activities 30
Fund Financial Statements
Governmental Funds:
Balance Sheet 32
Reconciliation of the Government Funds Balance Sheet to the Government-Wide Financial Statement of Net Position 34
Statement of Revenues, Expenditures and Changes in Fund Balances 35
Reconciliation of the Governmental Funds Statement of Revenues, Expenditures and Changes in Fund Balances to the Government-Wide Statement of Activities 37
Proprietary Funds (Internal Service Funds):
Statement of Net Position 38
Statement of Revenues, Expenses, and Changes in Fund Net Position 39
Statement of Cash Flows 40
Fiduciary Funds:
Statement of Fiduciary Net Position 41
Statement of Changes in Fiduciary Net Position 42

Notes to the Basic Financial Statements 45
Note 1 – Significant Accounting Policies 45
Note 2 – Cash and Investments 58
Note 3 – Accounts Receivable 62
Note 4 – Leases Receivable 63
Note 5 – Interfund Transactions 63
Note 6 – Loans Receivable 65
Note 7 – Capital Assets 67
Note 8 – Noncurrent Liabilities 68
Note 9 – Net Position/Fund Balance 70
Note 10 – Risk Management 74
Note 11 – Retirement Plans 75
Note 12 – Other Postemployment Benefits Plan 80
Note 13 – Commitments and Contingencies 85
Note 14 – Special Tax Assessment Districts 86
Note 15 – Successor Agency Trust (Former RDA) 89

REQUIRED SUPPLEMENTARY INFORMATION

Schedule of Revenues, Expenditures and Changes in Fund Balances –
Budget and Actual (GAAP Basis) – General Fund 92
Schedule of Revenues, Expenditures and Changes in Fund Balances –
Budget and Actual (GAAP Basis) – SB325 Sales Tax 93
Schedule of Revenues, Expenditures and Changes in Fund Balances –
Budget and Actual (GAAP Basis) – Low-and-Moderate Income Housing Fund 94
Schedule of Revenues, Expenditures and Changes in Fund Balances –
Budget and Actual (GAAP Basis) – Streets Grants 95
Schedule of Pension Contributions 96
Schedule of Changes in Net Position Liabilities, Net Pension Liabilities and Proportionate Shares 97
Schedule of Contributions for Other Postemployment Benefits 99
Schedule of Changes in Net OPEB Liability 100

SUPPLEMENTARY INFORMATION

Combining Nonmajor Governmental Funds:
Combining Balance Sheet 103
Combining Statement of Revenues, Expenditures and Changes in Fund Balances 104
Combining Special Revenue Nonmajor Governmental Funds:
Combining Balance Sheet 106
Statement of Revenues, Expenditures and Changes in Fund Balances 113
Schedule of Revenues, Expenditures and Changes in Fund Balances –
Budget and Actual (GAAP Basis) 120
Combining Capital Projects Nonmajor Governmental Funds:
Combining Balance Sheet 140
Combining Statement of Revenues, Expenditures and Changes in Fund Balances 143
Schedule of Revenues, Expenditures and Changes in Fund Balances –
Budget and Actual (GAAP Basis) 146
Schedule of Revenues, Expenditures and Changes in Fund Balances –
Budget and Actual (GAAP Basis) – Capital Projects Major Governmental Fund –
Traffic Circulation Impact Fee Fund 156
Combining Permanent Nonmajor Governmental Funds:
Combining Balance Sheet 158
Combining Statement of Revenues, Expenditures and Changes in Fund Balances 159
Schedule of Revenues, Expenditures and Changes in Fund Balances –
Budget and Actual (GAAP Basis) 160
Combining Debt Service Nonmajor Governmental Funds:
Combining Balance Sheet 164
Combining Statement of Revenues, Expenditures and Changes in Fund Balances 165
Schedule of Revenues, Expenditures and Changes in Fund Balances –
Budget and Actual (GAAP Basis) 166
Combining Internal Service Funds:
Statement of Net Position 170
Statement of Revenues, Expenses, and Changes in Fund Net Position 171
Statement of Cash Flows 172

Combining Custodial Funds:
Combining Statement of Fiduciary Net Position 174
Combining Statement of Changes in Fiduciary Net Position 177

STATISTICAL SECTION
Net Position by Component 185
Changes in Net Position 187
Fund Balances of Governmental Funds 191
Changes in Fund Balances of Governmental Funds 193
Assessed Value of Taxable Property 195
Direct and Overlapping Property Tax Rates 196
Principal Property Taxpayers 197
Direct and Overlapping Debt 198
Pledged-Revenue Coverage 199
Principal Employers 200
Operating Indicators by Function 201
Capital Asset Statistics by Function 202

This page is intentionally blank

ROCKLIN
CALIFORNIA

INTRODUCTORY SECTION

This page is intentionally blank

CITY OF ROCKLIN
3970 Rocklin Road
Rocklin, California 95677
Telephone (916) 625-5000
Fax (916) 625-5095

February 25, 2025

To the Honorable Mayor, Members of the City Council, and Citizens of Rocklin, California:

We are pleased to present the Annual Comprehensive Financial Report (ACFR) of the City of Rocklin, California (the City), for the fiscal year ending June 30, 2024 as required by Chapter 2.28 of the Rocklin Municipal Code. Although formally submitted to the Mayor and City Council, the ACFR is published to provide financial information to the residents of Rocklin, the investment community, the general public, and other interested parties.

This letter of transmittal is designed to be read with and complement the Management's Discussion and Analysis (MD&A), which reports on the financial highlights of the City and provides additional analysis on the variances and trends reported as part of the financial statements. The MD&A can be found immediately following the independent auditors' report.

Management assumes all responsibility for the completeness and reliability of the information presented in this report. To the best of our knowledge and belief, the enclosed data is accurate in all material respects and presents fairly the respective financial position and changes of the City, as of June 30, 2024.

The City contracted with Chavan & Associates, LLP, a firm of Certified Public Accountants licensed to practice in the State of California, to perform the annual independent audit. The auditors have issued an unmodified ("clean") opinion on the City's financial statements for the year ending June 30, 2024. The independent auditor's report is presented as the first item in the financial section of the report.

PROFILE OF THE CITY

The City of Rocklin was incorporated in 1893. The City is located on Interstate 80 and Highway 65, 20 miles northeast of Sacramento at the base of the Sierra Foothills in Placer County, California. Rocklin spans 20 square miles, and as of January 2024, had a population of 71,609. Rocklin is a preferred location to live, work, visit, and grow business because of its convenient location, excellent schools, and universities, abundant recreational opportunities, and highest commitment to public safety. According to a recent

evaluation by the Insurance Services Office, the City of Rocklin is in the top 4.1 percent of the nation in fire protection. Rocklin is home to Sierra Community College and an accredited private institution of higher education, Jessup University. The City is a safe community with low crime rates, excellent schools, and beautiful parks, and continues to be a leader in providing excellent services and a high quality of life.

The City, with 272.5 budgeted full-time employees, provides the following public services: public safety (police and fire), planning and community development, construction and maintenance of streets, storm drains and other infrastructure, parks and recreation, and general administrative services. The City maintains a website at https://www.rocklin.ca.us, which provides online services and extensive information about the City.

The City of Rocklin is a General Law City operating under the City Council/Manager form of government, which vests authority in an elected City Council. The City Council is the City's legislative and policymaking body, responsible for appointing key positions, including the City Manager, City Attorney, City Treasurer, and City Clerk. Additionally, the City Council appoints members to the following committees and commissions: Architectural Review Committee, Arts Commission, Board of Appeals, Community Recognition Commission, Investment Advisory Committee, Parks and Recreation Commission, and Planning Commission. The City Manager, appointed by the City Council, oversees the overall administration of the City.

The City Council also acts as the Board of Directors for the Rocklin Public Financing Authority (RPFA). The RPFA was formed as a joint powers authority between the City and the former Rocklin Redevelopment Agency to serve as a financing mechanism for various capital projects. For financial reporting purposes, the RPFA is considered a component unit of the City, and is incorporated within this document. Additional information on this legally separate entity can be found in Note 1 of the notes to the financial statements.

The City has established a Successor Agency, which replaced the former Rocklin Redevelopment Agency, dissolved in 2012. The Successor Agency is not a component unit of the City and is, instead, a separate legal entity overseen by the Placer County Consolidated Oversight Board and the California State Department of Finance. The City's role as the Successor Agency is fiduciary in nature. The Successor Agency is reported as a private-purpose trust fund, which is a fiduciary fund type. Additional information can be found in Note 15 of the notes to the financial statements.

The City prepares an annual budget and submits it to the City Council for review and approval. This budget serves as the foundation of the City's financial planning and control. The City Council appropriates funds to provide public services through the annual budget process. Activities of General, Special Revenue, Debt Service, Capital Project, Custodial, and Internal Service Funds are included in the annual budget. Each year, the City Manager is required to submit a proposed budget to City Council by May 15th. The City Council reviews and may revise the proposed budget in a public workshop. Pursuant to Chapter 3.28 of the Rocklin Municipal Code, the final budget must be presented to and adopted by the City Council by June 30th of each year. A copy of the final budget is available for download on the City's website: https://www.rocklin.ca.us/city-budgets.

The City has established a comprehensive framework of internal controls designed to protect the assets of the government from loss, theft, or misuse. This framework is designed so accurate accounting data is compiled to allow for the preparation of financial statements consistent with Generally Accepted Accounting Principles (GAAP). Internal controls provide reasonable, but not absolute assurance these objectives are met. The concept of reasonable assurance recognizes that the cost of internal controls

should not exceed the benefits and that decisions often require the use of estimates and judgments by management.

ECONOMIC FACTORS AND OUTLOOK

Over the past decade, the City of Rocklin continued to demonstrate economic improvement through June 2024. The City's population as of January 2024 is 71,609, reflecting a slight increase of 0.3 percent from the prior year. Property tax revenue has risen by $13.8 million, or 227 percent, between fiscal year 2014/2015 and fiscal year 2023/2024. This increase is attributed to a combination of rising home values and new home construction. Between 2023 and 2024, the volume of home sales decreased, primarily due to the Federal Reserve repeatedly raising interest rates. While this trend is anticipated to continue through fiscal year 2024/2025, limited housing supply is anticipated to prevent sharp price declines. Property tax revenue is forecasted to increase by 5 percent in fiscal year 2024/2025.

Between fiscal year 2014/2015 and fiscal year 2023/2024, sales tax revenue increased by more than $14.6 million, or 293 percent, driven by sales growth in many Rocklin businesses and higher online purchases. In fiscal year 2023/2024, sales tax only modestly increased due to a slowdown in spending on taxable merchandise. Looking ahead, this trend is anticipated to continue as consumers are making more cost-conscious decisions, resulting in anticipated reduction in consumer spending across various sectors, including restaurants, hotels, groceries, and general consumer goods. Consumers are prioritizing household essentials and non-taxable goods over more expensive purchases. This trend is compounded by increased consumer debt and a decline in personal savings. A negative trend is anticipated as the market normalizes going into fiscal year 2024/2025, with a modest increase anticipated in the latter part of the fiscal year.

LONG TERM FINANCIAL PLANNING

The City consistently plans its budgets with a focus on its long-term needs. This is accomplished through conservative fiscal management practices, adherences to financial policies, and the establishment of dedicated funds to allocate City revenues toward long-term financial needs. These funds include:

Operating Reserves: The City maintains a General Fund operating reserve for the purpose of bridging a gap between projected revenue and expenditures during periods of significant revenue declines and/or expenditure growth and the City has adequate resources in case of emergency or unforeseen events. Pursuant to City Council's adopted policy, the City will maintain an operating reserve equal to 25 percent of the planned budgeted expenditures in the General Fund, excluding capital costs. As of June 30, 2024, the General Fund operating reserve is $16.2 million.

Building Reserve: The City maintains a building reserve to fund capital maintenance projects to sustain existing City facilities or to support the expansion of existing City facilities to address workforce needs of City services. As of June 30 2024, the Building Reserve is $1.4 million.

Disaster Contingency Reserve: The City maintains an emergency reserve of $1 million. This money is used in the event of a declared emergency, providing financial support for recovery efforts.

Fleet Replacement Fund: The City funds the cost of replacement vehicles and equipment over the asset's useful life. This ensures the systematic replacement of vehicles and equipment to keep the City's vehicular fleet safely and properly operating. As of June 30, 2024, the Fleet Replacement

Fund is at $6.7 million, equivalent to 64 percent of the vehicle depreciation cost.

OPEB Trust: In 2014, the City established an irrevocable trust under IRS Section 115 to prefund retiree health costs, transferring $1 million into the California Employers' Retiree Benefit Trust (CERBT) Fund. As of the June 30, 2024, the total other post-employment benefit (OPEB) liability is $41.5 million, with a funded status of 90 percent. In 2023, the City established an additional OPEB trust through Public Agency Retirement Services (PARS) and deposited $1.3 million into the trust.

Park Infrastructure Reserve: The City established a park infrastructure reserve to fund capital improvement and maintenance projects to sustain existing park facilities and amenities. As of June 30, 2024, the park infrastructure reserve is $424,100.

Self-Insured Losses Reserve: The City maintains a self-insured losses reserve of $2 million. This money is used for losses not covered under existing insurance programs.

ACKNOWLEDGMENTS

The Administrative Services Department, particularly the Finance Division, takes great pride in the preparation of the ACFR. The professionalism, commitment, and effort of each employee in the Finance Division made this report possible. We also want to thank other employees in the Administrative Services Department and other City departments who contributed to the preparation of this report. We commend the City Council for their interest, support, and exemplary leadership in planning and conducting the financial operations of the City in a responsive and progressive manner.

Respectfully submitted,

Aly Zimmermann City Manager	Tameka Usher Director of Administrative Services	Daniel Choe Deputy Director of Administrative Services/ City Treasurer

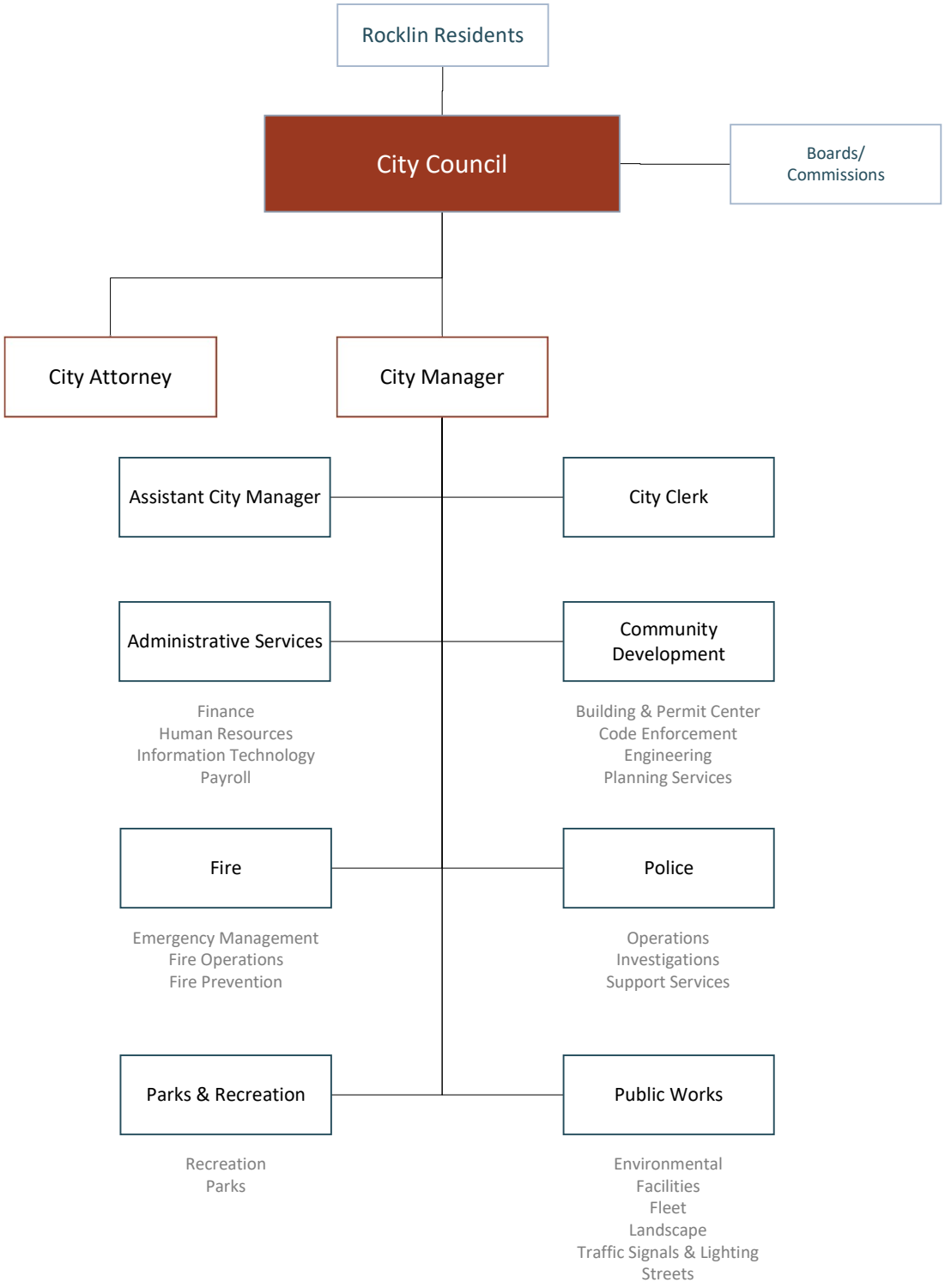
Rocklin Residents
City Council
Boards/ Commissions
City Attorney
City Manager
Assistant City Manager
City Clerk
Administrative Services
Community Development
Finance
Human Resources
Information Technology
Payroll
Building & Permit Center
Code Enforcement
Engineering
Planning Services
Fire
Police
Emergency Management
Fire Operations
Fire Prevention
Operations
Investigations
Support Services
Parks & Recreation
Public Works
Recreation
Parks
Environmental
Facilities
Fleet
Landscape
Traffic Signals & Lighting
Streets

City of Rocklin
Annual Comprehensive Financial Report
As of February 25, 2025

Directory of City Officials

City Council

Name	Term Expires
Jill Gayaldo, Mayor	December 2026
David Bass, Vice-Mayor	December 2028
Greg Janda, Councilmember	December 2028
Ken Broadway, Councilmember	December 2028
Bill Halldin, Councilmember	December 2026

City Officials

Name	Position
Aly Zimmermann	City Manager
Andrew Keys	Assistant City Manager
Matthew McOmber	City Attorney
Avinta Madhukansh-Singh	City Clerk
Daniel Choe	City Treasurer

City of Rocklin

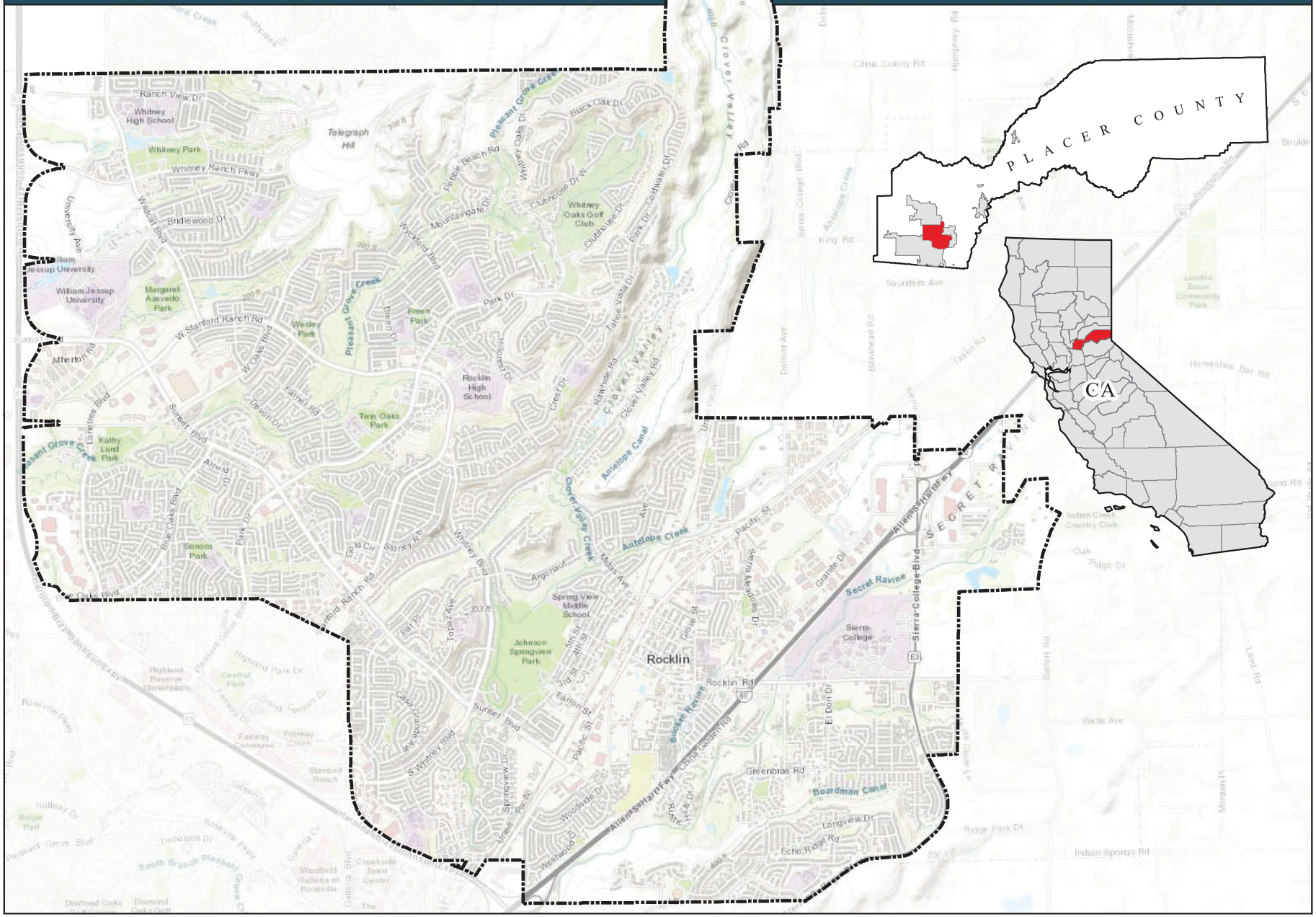

This page is intentionally blank

ROCKLIN

CALIFORNIA

FINANCIAL SECTION

This page is intentionally blank

Chavan and Associates, llp
Certified Public Accountants

INDEPENDENT AUDITOR'S REPORT

To the Honorable Mayor and Members of the
City Council of the City of Rocklin
Rocklin, California

Report on Financial Statements

Opinion

We have audited the accompanying financial statements of the governmental activities, each major fund, and the aggregate remaining fund information of the City of Rocklin (the "City"), as of and for the year ended June 30, 2024, and the related notes to the financial statements, which collectively comprise City's basic financial statements as listed in the table of contents.

In our opinion, the financial statements referred to above present fairly, in all material respects, the respective financial position of the governmental activities, each major fund, and the aggregate remaining fund information of the City of Rocklin, as of June 30, 2024, and the respective changes in financial position and, where applicable, cash flows thereof for the year then ended in accordance with accounting principles generally accepted in the United States of America.

Basis for Opinions

We conducted our audit in accordance with auditing standards generally accepted in the United States of America (GAAS) and the standards applicable to financial audits contained in *Government Auditing Standards*, issued by the Comptroller General of the United States. Our responsibilities under those standards are further described in the Auditor's Responsibilities for the Audit of the Financial Statements section of our report. We are required to be independent of the City and to meet our other ethical responsibilities, in accordance with the relevant ethical requirements relating to our audit. We believe that the audit evidence we have obtained is sufficient and appropriate to provide a basis for our audit opinions.

Responsibilities of Management for the Financial Statements

City management is responsible for the preparation and fair presentation of the financial statements in accordance with accounting principles generally accepted in the United States of America, and for the design, implementation, and maintenance of internal control relevant to the preparation and fair presentation of financial statements that are free from material misstatement, whether due to fraud or error.

In preparing the financial statements, management is required to evaluate whether there are conditions or events, considered in the aggregate, that raise substantial doubt about the City's ability to continue as a going concern for twelve months beyond the financial statement date, including any currently known information that may raise substantial doubt shortly thereafter.

16450 Monterey Road, Suite 5, Morgan Hill, CA 95037
Tel: 408-217-8749 • E-Fax: 408-872-4159
info@cnallp.com • www.cnallp.com

Auditor's Responsibilities for the Audit of the Financial Statements

Our objectives are to obtain reasonable assurance about whether the financial statements as a whole are free from material misstatement, whether due to fraud or error, and to issue an auditor's report that includes our opinions. Reasonable assurance is a high level of assurance but is not absolute assurance and therefore is not a guarantee that an audit conducted in accordance with GAAS will always detect a material misstatement when it exists. The risk of not detecting a material misstatement resulting from fraud is higher than for one resulting from error, as fraud may involve collusion, forgery, intentional omissions, misrepresentations, or the override of internal control. Misstatements are considered material if there is a substantial likelihood that, individually or in the aggregate, they would influence the judgment made by a reasonable user based on the financial statements.

In performing an audit in accordance with GAAS and GAGAS, we:

- Exercise professional judgment and maintain professional skepticism throughout the audit.
- Identify and assess the risks of material misstatement of the financial statements, whether due to fraud or error, and design and perform audit procedures responsive to those risks. Such procedures include examining, on a test basis, evidence regarding the amounts and disclosures in the financial statements.
- Obtain an understanding of internal control relevant to the audit in order to design audit procedures that are appropriate in the circumstances, but not for the purpose of expressing an opinion on the effectiveness of the City's internal control. Accordingly, no such opinion is expressed.
- Evaluate the appropriateness of accounting policies used and the reasonableness of significant accounting estimates made by management, as well as evaluate the overall presentation of the financial statements.
- Conclude whether, in our judgment, there are conditions or events, considered in the aggregate, that raise substantial doubt about the City's ability to continue as a going concern for a reasonable period of time.

We are required to communicate with those charged with governance regarding, among other matters, the planned scope and timing of the audit, significant audit findings, and certain internal control–related matters that we identified during the audit.

Required Supplementary Information

Accounting principles generally accepted in the United States of America require that the management's discussion and analysis and other required supplementary information, as listed in the table of contents, be presented to supplement the basic financial statements. Such information, although not a part of the basic financial statements, is required by the Governmental Accounting Standards Board who considers it to be an essential part of financial reporting for placing the basic financial statements in an appropriate operational, economic, or historical context. We have applied certain limited procedures to the required supplementary information in accordance with auditing standards generally accepted in the United States of America, which consisted of inquiries of management about the methods of preparing the information and comparing the information for consistency with management's responses to our inquiries, the basic financial statements, and other knowledge we obtained during our audit of the basic financial statements. We do not express an

16450 Monterey Road, Suite 5, Morgan Hill, CA 95037
Tel: 408-217-8749 • E-Fax: 408-872-4159
info@cnallp.com • www.cnallp.com

opinion or provide any assurance on the information because the limited procedures do not provide us with sufficient evidence to express an opinion or provide any assurance.

Supplementary Information

Our audit was conducted for the purpose of forming opinions on the financial statements that collectively comprise the City's basic financial statements. The combining and individual fund financial statements and schedules are presented for purposes of additional analysis and are not a required part of the basic financial statements. Such information is the responsibility of management and was derived from and relates directly to the underlying accounting and other records used to prepare the basic financial statements. The information has been subjected to the auditing procedures applied in the audit of the basic financial statements and certain additional procedures, including comparing and reconciling such information directly to the underlying accounting and other records used to prepare the basic financial statements or to the basic financial statements themselves, and other additional procedures in accordance with GAAS. In our opinion, the combining and individual fund financial statements and schedules are fairly stated, in all material respects, in relation to the basic financial statements as a whole.

Other Information

Management is responsible for the other information included in the annual comprehensive financial report. The other information comprises the introductory and statistical sections but does not include the basic financial statements and our auditor's report thereon. Our opinions on the basic financial statements do not cover the other information, and we do not express an opinion or any form of assurance thereon. In connection with our audit of the basic financial statements, our responsibility is to read the other information and consider whether a material inconsistency exists between the other information and the basic financial statements, or the other information otherwise appears to be materially misstated. If, based on the work performed, we conclude that an uncorrected material misstatement of the other information exists, we are required to describe it in our report.

Report on Summarized Comparative Information

We have previously audited the City's June 30, 2023 financial statements, and we expressed unmodified audit opinions on the respective financial statements in our report dated November 30, 2023. In our opinion, the summarized comparative information presented herein as of and for the year ended June 30, 2023, is consistent, in all material respects, with the audited financial statements from which it has been derived.

Other Reporting Required by *Government Auditing Standards*

In accordance with *Government Auditing Standards*, we have also issued our report dated November 18, 2024, on our consideration of the City's internal control over financial reporting and on our tests of its compliance with certain provisions of laws, regulations, contracts, and grant agreements and other matters. The purpose of that report is to describe the scope of our testing of internal control over financial reporting and compliance and the results of that testing, and not to provide an opinion on internal control over financial reporting or on compliance. That report is an integral part of an audit

16450 Monterey Road, Suite 5, Morgan Hill, CA 95037
Tel: 408-217-8749 • E-Fax: 408-872-4159
info@cnallp.com • www.cnallp.com

performed in accordance with *Government Auditing Standards* in considering the City's internal control over financial reporting and compliance.

C & A LLP

November 18, 2024
Morgan Hill, California

16450 Monterey Road, Suite 5, Morgan Hill, CA 95037
Tel: 408-217-8749 • E-Fax: 408-872-4159
info@cnallp.com • www.cnallp.com

ROCKLIN

CALIFORNIA

MANAGEMENT'S DISCUSSION AND ANALYSIS

INTRODUCTION

The Management's Discussion and Analysis (MD&A) is a required section of the City's Annual Comprehensive Financial Report, as shown in the overview below. The purpose of the MD&A is to offer readers a narrative overview and analysis of the City's financial activity for the fiscal year ended June 30, 2024. We encourage readers to consider this MD&A in conjunction with the Basic Financial Statements to provide a comprehensive understanding of the City's operations and financial standing.

Required Components of the Annual Comprehensive Financial Report

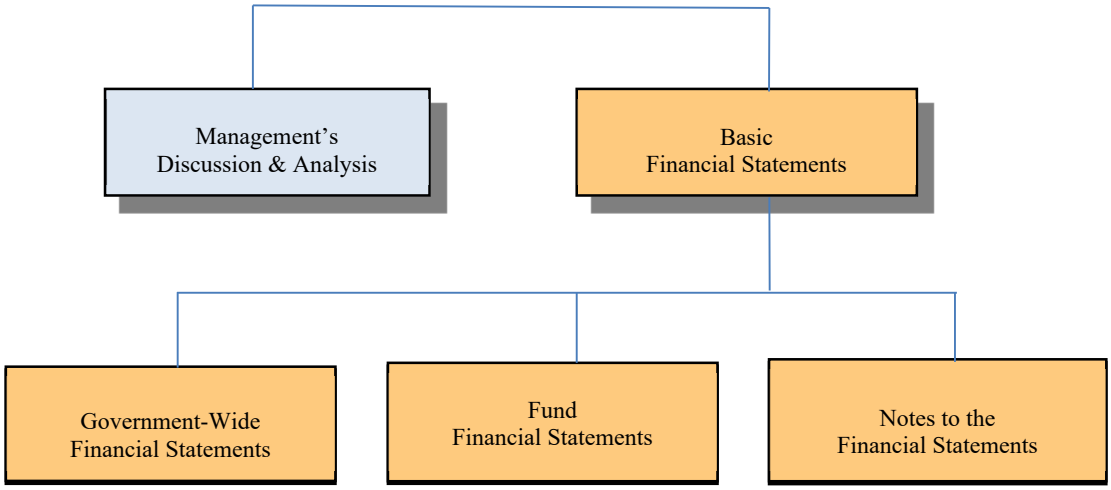

FINANCIAL HIGHLIGHTS

- **Government-Wide Highlights:**
  As of the close of the fiscal year 2023/2024, the assets and deferred outflows of the City exceeded liabilities and deferred inflows by $427.9 million. This net position increased by $7.5 million, or 1.8%, during fiscal year 2023/2024 from $420.3 million.

  The City's Government-Wide General Revenues increased by 10.2% from $74.6 million to $82.2 million. General revenues include items such as property tax, sales and use taxes, gas tax, transient occupancy tax, motor vehicle fees, franchise fees, impact fees, investment earnings, and other revenues. For fiscal year 2023/2024 property taxes increased by 5.2% and investment earnings increased by 94.8%, while sales and use taxes increased by 9.5% and impact fees increased by 157.5%. Program Revenues were down 16.5%, or $3.8 million from the prior year.

  The City's Government-Wide expenses increased by 7% from $87.8 million to $93.9 million this fiscal year.

- **Fund Highlights:**
  General Fund revenues totaled $68 million, while expenditures totaled $66.1 million. Transfers in from other funds totaled $5.9 million, and transfers out totaled $0.56 million, resulting in a net increase in General Fund fund balance of $7.3 million. The fund balance increased due to higher revenues and reduced expenditures. Revenues from property tax, sales tax, and interest increased, while spending on new infrastructure projects decreased.

- **Other Highlights:**
  The impact from less than expected earnings in the CalPERS pension pooled investments, during the measurement period included in this fiscal year's financial statements, was an increase to the City's net pension liability of $3 million, from $63.8 million to $66.9 million. Changes in assumptions and expected and actual experience also contributed to the increase.

OVERVIEW OF THE FINANCIAL STATEMENTS

This discussion and analysis is intended to serve as an introduction to the City's basic financial statements. The Financial Statements are comprised of Government-Wide (City-wide) Financial Statements, Fund Financial Statements, Notes to the Financial Statements, Required Supplementary Information, and Supplementary Information. The Government-wide and Fund Financial Statements provide the reader with two different perspectives of the City's financial activities and financial position.

The Government-Wide Financial Statements

Government-Wide Financial Statements provide a longer-term view of the City's activities as a whole, and comprise of the *Statement of Net Position* and the *Statement of Activities*.

The *Statement of Net Position* provides information about the financial position of the City, including its capital assets, long-term liabilities, and deferred inflows/outflows of resources on a full accrual basis, similar to that used by corporations. The difference between the total assets and deferred outflows of resources and the total liabilities and deferred inflows of resources is reported as *net position*. Over time, increases or decreases in net position may serve as a useful indicator of whether the financial position of the City is improving or deteriorating.

The *Statement of Activities* provides information about the City's revenues and its expenses, also on a full accrual basis, with the emphasis on measuring net revenues and/or expenses for each of the City's programs. The *Statement of Activities* explains in detail the change in *net position* for the fiscal year. All changes in net position are reported as soon as the event causing the change occurs, regardless of the timing of related cash flows. Therefore, some revenues and expenses reported in this statement are for items that will only result in cash flows for future fiscal periods.

Both the *Statement of Net Position* and the *Statement of Activities* distinguish functions of the City that are principally supported by taxes and intergovernmental revenues (governmental activities) from other functions that are intended to recover all or a significant portion of their costs through user fees and charges (business-type activities).

Governmental Activities – All of the City's basic services are considered to be governmental activities, including general government, community development, parks and recreation, public safety, and public works. These services are supported by general City revenues, such as taxes, and by specific program revenues, such as development and recreation program fees.

Business-Type Activities – The City does not have any business-type activities.

Fund Financial Statements

A fund is a grouping of related accounts that is used to maintain control over resources segregated for specific activities or objectives. The City, like other local governments, uses fund accounting to ensure and demonstrate compliance with finance-related legal requirements.

Fund Financial Statements report the City's operations in more detail than the government-wide statements and focus primarily on the short-term activities of the City's general fund and other major funds. The fund financial statements measure only current revenues and expenditures and fund balances; they exclude capital assets, long-term debt, and other long-term amounts.

Major funds present the major activities of the City for the fiscal year, and may change from year to year as a result of changes in the pattern of the City's activities. Each major fund is individually presented, and all non-major funds are summarized and presented in a single column. Subordinate schedules present the detail of non-major funds. The City's funds are segregated into three categories: governmental funds, proprietary funds, and fiduciary funds.

Governmental Funds – The City's basic services are reported in governmental funds, which focus on how money flows into and out of those funds and the balances available at year-end. Financial statements are prepared on the modified accrual basis, which means they measure only current financial resources and uses. Carrying amounts for capital assets and other long-lived assets, along with long-term liabilities are not presented on the balance sheet in the governmental fund financial statements. Unlike the government-wide financial statements, governmental fund financial statements focus on near-term inflows and outflows of spendable resources, as well as on balances of spendable resources available at the end of the fiscal year.

Since the focus of governmental funds is narrower than that of the government-wide financial statements, it is useful to compare the information presented for *governmental funds* with similar information presented for *governmental activities* in the government-wide financial statements. Such information may be useful in evaluating the City's near-term financing requirements. Both the governmental balance sheet and the governmental fund statement of revenues, expenditures, and changes in fund balances provide a reconciliation to facilitate this comparison between *governmental funds* and *governmental activities*. For fiscal year 2023/2024, the City had five major funds, twenty-one nonmajor special revenue funds, eleven nonmajor capital projects funds, two nonmajor permanent funds, and two non-major debt service funds.

Proprietary Funds – The City has and maintains proprietary funds, which include two internal service funds. Internal service funds are used to accumulate and allocate costs internally among the City's various functions. The City uses one internal service fund to account for its fleet operations and one for risk management functions. Because these services predominately benefit only governmental functions, they have been included within *governmental activities* in the government-wide financial statements.

Fiduciary Funds – Fiduciary funds are used to account for resources held for the benefit of parties outside the City. Fiduciary funds are not reported in the government-wide financial statements because the resources of these funds are not available to support the City's own programs. The accounting for fiduciary funds is much like that used for business-type activities. For fiscal year 2023/2024, the City had one private-purpose trust fund and eight custodial funds. Private-purpose trust funds are used to account for resources legally held in trust for special purposes. Custodial funds are held by the City in a custodial nature and are accounted for using an economic resource measurement focus.

NOTES TO THE FINANCIAL STATEMENTS

Notes to the Financial Statements provide additional information that is essential to a full understanding of the data provided in the government-wide and fund financial statements. The notes can be found immediately following the fund financial statements.

REQUIRED SUPPLEMENTARY INFORMATION

In addition to the basic financial statements and accompanying notes, this report presents certain *required supplementary information* including a budgetary comparison for the General Fund and other major funds as presented in the governmental fund financial statements. Information regarding the City's pension liabilities and information regarding the City's progress in funding its obligation to provide OPEB to its employees is included.

SUPPLEMENTARY INFORMATION

The *supplementary information* section of this report includes combining and individual fund statements and schedules designed to provide additional information on non-major governmental funds including special revenue, debt service, capital project funds, proprietary internal service fund information and agency funds. An unaudited statistical section provides historical and current data on financial trends, revenue and debt capacity, demographic and economic information, and operating information.

GOVERNMENT-WIDE FINANCIAL ANALYSIS

Assets
In the *Statement of Net Position* schedule shown on the next page, total assets increased by $14.2 million.

Current and other assets increased by $17.8 million compared to the prior fiscal year. This increase was attributed to higher cash and investment balances. Capital Assets decreased by $3.6 million, mainly because the previous year included a one-time infrastructure transfer from Whitney Ranch Streets in Community Facilities District No. 10. This decrease was partially offset by new vehicle purchases.

Deferred Outflows of Resources
In the *Statement of Net Position* schedule shown on the next page, Deferred Outflows of Resources decreased by $6.1 million. This decline was primarily due to changes in actuarial assumptions, difference between projected and actual plan earnings, and changes in proportionate shares.

Liabilities
In the *Statement of Net Position* schedule shown on the next page, total liabilities increased by $4.3 million. Noncurrent liabilities increased by $1.5 million from the prior fiscal year, mainly due to the lower-than-expected rate of return on the assets of the pension plan. This lower return also led to a $3 million increase in the Net Pension Liability.

Current and other liabilities increased by $2.8 million from the prior fiscal year, mostly as a result of an increase in Accounts Payable and Accrued Liabilities.

Deferred Inflows of Resources
In the *Statement of Net Position* schedule shown on the next page, Deferred Inflows of Resources decreased by $3.8 million, primarily due to the amortization of lower-than-expected investment returns in the CalPERS pension plans.

Net Position

In the *Statement of Net Position* schedule shown below, the City's Total Net Position increased $7.5 million. Net position may serve over time as an indicator of the City's financial position. A significant portion of the City's $427.9 million total net position was for net investment in capital assets of $327.4 million, (e.g., land, buildings, general government infrastructure, equipment, and vehicles) net of accumulated depreciation and reduced by any related debt used to acquire or construct those assets. The $2 million decrease in net investment in capital assets is primarily due to depreciation, partially offset by new asset purchases.

Table 1 - Net Position

	Governmental Activities		Dollar	Percent
	2024	2023	Change	Change
Assets				
Current and other assets	$ 164,805,527	$ 147,044,980	$ 17,760,547	12.08%
Capital assets - net	337,250,532	340,847,057	(3,596,525)	-1.06%
Total Assets	$ 502,056,059	$ 487,892,037	$ 14,164,022	2.90%
Deferred Outflows of Resources	$ 32,073,804	$ 38,199,935	$ (6,126,131)	-16.04%
Liabilities				
Current and other liabilities	$ 13,590,954	$ 10,758,247	$ 2,832,707	26.33%
Noncurrent liabilities	83,820,840	82,347,443	1,473,397	1.79%
Total Liabilities	$ 97,411,794	$ 93,105,690	$ 4,306,104	4.62%
Deferred Inflows of Resources	$ 8,846,435	$ 12,647,866	$ (3,801,431)	-30.06%
Net Position				
Net investment in capital assets	$ 327,411,118	$ 329,441,747	$ (2,030,629)	-0.62%
Restricted	37,577,474	36,012,891	1,564,583	4.34%
Unrestricted	62,883,042	54,883,778	7,999,264	14.57%
Total Net Position	$ 427,871,634	$ 420,338,416	$ 7,533,218	1.79%

Governmental Activities

Revenues

In the *Statement of Activities* schedule shown on the next page, total program revenue and total general revenue combined show an increase of $3.8 million.

Program revenues decreased by $3.8 million from the prior fiscal year, attributed to the following factors:

- Charges for services increased by $1.4 million (15%) due to higher collections of North West Rocklin Community Park and Public Facilities impact fees.
- Operating grants and contributions increased by $1.8 million (30%), mainly due to reimbursements for non-capital road projects and a state planning grant.
- Capital grants and contributions decreased by $7 million (89%), primarily due to the completion of the Pacific at Rocklin Road Roundabout project in the prior year, which was funded by grants. Additionally, there were fewer developer-contributed streets infrastructure in the current year.

General revenues increased by $7.6 million due to the following factors:

- Taxes and assessments rose by $4.6 million (6%), driven primarily by a $1.2 million increase in property taxes, a $1.9 million increase in sales and use taxes, and a $1.3 million increase in impact fees.
- Investment earnings increased by $2.8 million (95%), reflecting higher interest rates and market fluctuations.

Expenses

Total expenses increased by $6.1 million due to the following factors:

- Public safety expenses increased by $4.6 million (13%), mainly driven by higher labor and pension costs.
- Public works expenses increased by $0.8 million (3%), reflecting higher pension costs, partially offset by moving the Engineering Division from Public Works to the Community Development Department during organizational changes.
- Parks and recreation expenses grew by $0.8 million (11%), mainly due to increases in labor costs, concert operations, and rising utilities expenses.
- Community development expenses increased by $1.1 million (21%), primarily due to moving the Engineering Division from Public Works to Community Development.

Table 2 - Statement of Activities

Functions/Programs	Governmental Activities 2024	Governmental Activities 2023	Dollar Change	Percent Change
Program Revenues				
Charges for services	$ 10,781,142	$ 9,378,356	$ 1,402,786	14.96%
Operating grants and contributions	7,613,156	5,844,166	1,768,990	30.27%
Capital grants and contributions	853,139	7,822,971	(6,969,832)	-89.09%
Total Program Revenues	19,247,437	23,045,493	(3,798,056)	-16.48%
General Revenues				
Taxes and assessments	75,954,320	71,377,449	4,576,871	6.41%
Investment earnings	5,658,816	2,904,931	2,753,885	94.80%
Other revenues	571,316	293,924	277,392	94.38%
Total General Revenues	82,184,452	74,576,304	7,608,148	10.20%
Expenses				
General government	16,290,451	17,316,721	(1,026,270)	-5.93%
Public safety	38,550,514	33,989,917	4,560,597	13.42%
Public works	24,692,787	23,913,391	779,396	3.26%
Parks and recreation	8,181,120	7,390,432	790,688	10.70%
Community development	6,188,821	5,132,246	1,056,575	20.59%
Interest on fiscal charges	40,062	76,403	(36,341)	-47.56%
Total Expenses	93,943,755	87,819,110	6,124,645	6.97%
Excess (Deficiency) of Revenues over Expenses	7,488,134	9,802,687	(2,314,553)	-23.61%
Special Item - Settlements and Recoveries	-	3,755,224	(3,755,224)	-100.00%
Special Item Gain (Loss) Disposal Capital Assets	45,084	11,000	34,084	309.85%
Increase / (Decrease) in Net Position	7,533,218	13,568,911	(6,035,693)	-44.48%
Net Position, Beginning of Year	420,338,416	406,769,505	13,568,911	3.34%
Net Position, End of Year	$ 427,871,634	$ 420,338,416	$ 7,533,218	1.79%

FINANCIAL ANALYSIS OF THE CITY'S FUNDS

A summary of the changes in fund balance of the Major Funds and Other Governmental Funds is presented below:

Table 3 - Summary of Revenues, Expenditures and Changes in Fund Balance - Governmental Funds

	Major Funds						
	General Fund	SB325 Sales Tax Fund	Low and Moderate Income Housing Asset Fund	Traffic Circulation Impact Fee Fund	Streets Grants	Nonmajor Governmental Funds	Total
Total Revenues	$ 68,021,761	$ 5,554,294	$ 439,609	$ 2,010,800	$ 2,169,331	$ 23,181,294	$ 101,377,089
Total Expenditures	(66,131,132)	(5,977,203)	(152,914)	(243,670)	(2,569,719)	(12,965,917)	(88,040,555)
Revenues Over (Under) Expenditures	1,890,629	(422,909)	286,695	1,767,130	(400,388)	10,215,377	13,336,534
Transfers In	5,918,712	-	3,200	-	-	1,048,839	6,970,751
Transfers Out	(558,874)	(821,653)	(143,706)	(84,792)	-	(5,356,125)	(6,965,150)
Net Change in Fund Balances	7,250,467	(1,244,562)	146,189	1,682,338	(400,388)	5,908,091	13,342,135
Beginning of Year	54,220,156	6,668,586	13,140,918	17,419,259	(892,118)	25,289,765	115,846,566
End of Year	$ 61,470,623	$ 5,424,024	$ 13,287,107	$ 19,101,597	$ (1,292,506)	$ 31,197,856	$ 129,188,701

The total Governmental fund balances for fiscal year 2023/2024 were $129.2 million, reflecting a $13.3 million increase during the year. This includes both Major Funds and Other Governmental Funds.

- The fund balance in the General Fund increased by $7.3 million. This increase was due to higher property and sales tax revenues, increased interest earnings, and lower expenditures from position vacancies and delayed capital projects.
- The fund balance in the SB325 Sales Tax Fund decreased by $1.2 million due to lower sales tax on gas and higher capital expenditures on streets pavement projects.
- The fund balance in the Low-and-Moderate-Income Housing Asset Fund increased by $0.15 million from interest collected on loans. Expenditures were related to administration and programs to assist unhoused population.
- The fund balance in the Traffic Circulation Impact Fee Fund increased by $1.7 million, mainly due to development impact fee revenues and interest earnings exceeding expenditures. A Traffic Circulation Element Study, followed by a Traffic Impact Fee Study, will determine appropriate future project expenditures for these collected impact fees.
- The fund balance in the Streets Grants Fund decreased by $0.4 million, mainly due to a timing difference where amounts owed to the fund were not received within the period of availability.
- The fund balance in the Nonmajor Governmental Fund's increased by $5.9 million, mainly due to increases in the SB 1 Road Maintenance & Rehabilitation Act Fund, Community Facilities District No. 5 Fund, and Capital Construction Tax Fund. These fund balances are being accumulated for future projects and maintenance expenditures.

CAPITAL ASSETS

The capital assets of the City are those assets which are used in the performance of the City's functions including infrastructure assets. As of June 30, 2024, the net capital assets for governmental activities totaled $337.3 million, reflecting a decrease of $3.6 million from the prior year. Depreciation on these capital assets, recognized in the Government-Wide Financial Statements, totaled $14.6 million. The following table summarizes the City's capital assets at the end of the fiscal year:

Table 4 - Capital Assets at Year End - Net

	Governmental Activities		Dollar	Percent
	2024	2023	Change	Change
Land	$ 8,338,942	$ 8,338,942	$ -	0.00%
Land improvements	108,402	108,402	-	0.00%
Park land	61,097,079	61,097,079	-	0.00%
Construction in progress	16,415,766	12,116,112	4,299,654	35.49%
Subscription right of use assets	596,611	603,131	(6,520)	-1.08%
Buildings	11,042,322	11,899,757	(857,435)	-7.21%
Facilities & other improvements	2,945,762	2,941,298	4,464	0.15%
Machinery & equipment	778,403	388,072	390,331	100.58%
Fleet machinery & equipment	7,067,481	6,063,575	1,003,906	16.56%
Park buildings	1,711,047	1,801,643	(90,596)	-5.03%
Park equipment	-	24,385	(24,385)	-100.00%
Park improvements	8,492,896	8,324,808	168,088	2.02%
Infrastructure	218,655,821	227,139,853	(8,484,032)	-3.74%
Total Capital Assets, Net	$ 337,250,532	$ 340,847,057	$ (3,596,525)	-1.06%

Additional detail and information on capital asset activity is described in Note 7 of this report.

- Construction in progress increased by $4.3 million, driven mainly by the Pavement Rehabilitation project ($1.3 million), Pacific at Rocklin Roundabout ($921 thousand), Five Star & Destiny Drive ($762 thousand), and other various projects ($1.3 million).
- Fleet machinery and equipment increased by $1 million due to the purchase of a new Fire Engine being built for the upcoming Fire Station.
- Infrastructure decreased by $8.5 million, primarily due to depreciation expense, which reduces the asset value over its useful life.
- Decreases in other categories were mainly due to annual depreciation.

DEBT ADMINISTRATION

During the year, Long-Term Debt from governmental activities increased by $1.3 million. The increase was mostly due to lower-than-expected investment returns and changes in assumptions within the CalPERS pension plan, which increased the City's proportionate share of the Net Pension Liabilities by $3 million. Conversely, the City's net OPEB liability decreased by $0.5 million due to better-than-expected investment returns during the measurement period. Other decreases in Long-Term Debt resulted from principal payments on outstanding bonds and direct borrowings.

The following table summarizes the City's debt at the end of the year:

Table 5 - Long-Term Debt

	Governmental Activities			
	2024	2023	Dollar Change	Percemt Change
2016 Lease Revenue Bonds	$ 7,548,363	$ 7,875,913	(327,550)	-4.16%
Pacific Prem. Bank Loan - RPFA Refunding	1,029,183	1,526,806	(497,623)	-32.59%
Sunset Whitney Recreation Area Note	-	516,934	(516,934)	-100.00%
Subscription Liabilities	598,561	601,247	(2,686)	-0.45%
Claims Payable	2,811,286	2,472,627	338,659	13.70%
Net Pension Liability	66,883,471	63,835,601	3,047,870	4.77%
Net OPEB Liability	4,126,333	4,617,846	(491,513)	-10.64%
Compensated Absences	3,543,996	3,842,280	(298,284)	-7.76%
Total Long-Term Debt	$ 86,541,193	$ 85,289,254	$ 1,251,939	1.47%

Additional detail and information on long-term debt activity is described in Note 8 of this report.

GENERAL FUND BUDGETARY HIGHLIGHTS

The Rocklin Municipal Code Chapter 3.28 requires the City Manager to submit a proposed budget on or before May 15th of each year. The City Council reviews and may revise the proposed budget in a public workshop. The budget must be formally adopted by the City Council on or before June 30th of each year. The City Council adopted the fiscal year 2023/2024 budget in June 2023.

Changes to the City's General Fund budget for fiscal year 2023/2024, from the ooriginal to the final budget, are detailed in the Required Supplementary Information ssection, along with a comparison to actual activity for the year. Budget amendments must be approved by a resolution of the City Council. The General Fund revenue budget increased by $30,000 between the original and final budget. The increase was due to a $420,000 decrease in taxes and assessments, offset by a $450,000 increase in revenue from the use of money and property.

The City had actual expenditures of $66.1 million, coming in $14.8 million below the final amended budget and $3.1 million below the original budget. This variance was primarily due to labor savings, deferred vehicle purchases, delays in park upgrades, and other expenditures that did not occur during fiscal year 2023/2024.

ECONOMIC FACTORS BEARING ON THE CITY'S FUTURE

Looking forward to 2024/2025, the City expects to remain fiscally sound. While the revenue outlook is generally positive, increased operational costs, slowing sales tax growth, and rising labor expenses will require prudent monitoring to maintain fiscal stability. Key factors considered in the development of the fiscal year 2024/2025 budget include:

- Property taxes are the largest component of General Fund revenues. Property tax revenues are expected to remain optimistic, growing by 5% from fiscal year 2023/2024. This growth is driven by rising home values and new home sales.
- Sales tax revenues are expected to decline by 3.4% from the fiscal year 2023/2024 budget due to an anticipated reduction in consumer spending across various sectors, including restaurants, hotels, groceries, and general consumer goods.
- Operating expenses are expected to increase, primarily due to contracted cost-of-living adjustments for labor, higher pension contributions, rising utility costs, and increased insurance premiums.

The budget is balanced and strategically developed to address the City's long-term needs, ensuring fiscal sustainability and the continued delivery of high-quality services to the community.

REQUEST FOR FINANCIAL INFORMATION

This financial report is designed to provide a general overview of the City of Rocklin's finances for all of Rocklin's residents, taxpayers, customers, investors, and creditors. Questions concerning any of the information provided in this report or requests for additional information should be addressed to the City Clerk, 3970 Rocklin Road, Rocklin, California, 95677.

This page is intentionally blank

ROCKLIN

CALIFORNIA

BASIC FINANCIAL STATEMENTS

This page is intentionally blank

City of Rocklin
Statement of Net Position
June 30, 2024
(With Comparative Totals for June 30, 2023)

	Governmental Activities	
	2024	2023
ASSETS		
Current Assets:		
Cash and investments	$ 142,425,078	$ 121,859,514
Restricted cash and investments	1,764,583	2,260,219
Receivables - net	11,353,809	12,637,497
Inventory and other assets	58,374	55,213
Total Current Assets	155,601,844	136,812,443
Noncurrent Assets:		
Leases receivable	3,830,409	4,039,063
Loans receivable	5,373,274	6,193,474
Capital assets - net	337,250,532	340,847,057
Total Noncurrent Assets	346,454,215	351,079,594
Total Assets	$ 502,056,059	$ 487,892,037
DEFERRED OUTFLOWS OF RESOURCES		
OPEB Adjustments	$ 5,900,884	$ 7,777,719
Pension Adjustments	26,172,920	30,422,216
Total Deferred Outflows of Resources	$ 32,073,804	$ 38,199,935
LIABILITIES		
Current Liabilities:		
Accounts payable and accrued liabilities	$ 9,782,639	$ 6,668,708
Deposits	1,006,834	1,080,620
Interest payable	43,000	61,779
Other liabilities	38,128	5,329
Claims payable - current portion	161,176	145,345
Compensated absences - current portion	1,733,264	1,779,223
Long-term debt - due within one year	825,913	1,017,243
Total Current Liabilities	13,590,954	10,758,247
Noncurrent Liabilities:		
Long-term debt - due after one year	8,350,194	9,503,657
Claims payable	2,650,110	2,327,282
Compensated absences	1,810,732	2,063,057
Net pension liability	66,883,471	63,835,601
Net OPEB liability	4,126,333	4,617,846
Total Noncurrent Liabilities	83,820,840	82,347,443
Total Liabilities	$ 97,411,794	$ 93,105,690
DEFERRED INFLOWS OF RESOURCES		
Deferred Gain on Early Defeasance of Long-Term Debt	$ 663,307	$ 884,410
Leases receivable	3,791,504	4,011,697
OPEB Adjustments	2,376,280	3,902,006
Pension Adjustments	2,015,344	3,849,753
Total Deferred Inflows of Resources	$ 8,846,435	$ 12,647,866
NET POSITION		
Net investment in capital assets	$ 327,411,118	$ 329,441,747
Restricted for:		
CFD operations and maintenance	6,251,089	5,108,432
Housing rehabilitation	14,132,400	13,984,526
Settlements	3,763,783	3,756,563
Lighting and landscape operations and maintenance	1,510,395	1,558,949
Police services programs	526,081	508,617
Street maintenance and construction	9,107,200	8,222,981
Expendable endowments	17,946	17,024
Nonexpendable endowments	491,455	491,455
Debt service	1,105,196	1,602,383
Other	671,929	761,961
Total restricted	37,577,474	36,012,891
Unrestricted	62,883,042	54,883,778
Total Net Position	$ 427,871,634	$ 420,338,416

The accompanying notes are an integral part of these financial statements.

City of Rocklin
Statement of Activities
For the Year Ended June 30, 2024
(With Comparative Totals for June 30, 2023)

		Program Revenues				Net (Expense) Revenue and Change in Net Position	
Functions/Programs	Expenses	Charges for Services	Operating Grants and Contributions	Capital Grants and Contributions	Total	2024	2023
Primary Government:							
Governmental Activities:							
General government	$ 16,290,451	$ 292,593	$ 2,663,822	$ 746,700	$ 3,703,115	$ (12,587,336)	$ (10,012,443)
Public safety	38,550,514	1,957,215	1,213,409	-	3,170,624	(35,379,890)	(31,199,343)
Public works	24,692,787	160,087	793,320	106,439	1,059,846	(23,632,941)	(19,392,393)
Parks and recreation	8,181,120	2,778,285	562,364	-	3,340,649	(4,840,471)	(5,064,699)
Community development	6,188,821	5,592,962	2,380,241	-	7,973,203	1,784,382	971,664
Interest and fiscal charges	40,062	-	-	-	-	(40,062)	(76,403)
Total Governmental Activities	$ 93,943,755	$10,781,142	$ 7,613,156	$ 853,139	$ 19,247,437	(74,696,318)	(64,773,617)
	General Revenues and Special Items:						
	Taxes:						
	Property taxes					24,762,287	23,530,699
	Sales and use taxes					22,202,133	20,283,218
	Gas tax					6,897,034	7,542,652
	Transient occupancy taxes					1,121,843	1,042,949
	Other taxes					16,015,656	15,482,638
	Total taxes					70,998,953	67,882,156
	Motor vehicle fees					88,058	73,456
	Franchise fees					2,790,010	2,615,012
	Impact fees					2,077,299	806,825
	Investment earnings					5,658,816	2,904,931
	Other revenues					571,316	293,924
	Total General Revenues					82,184,452	74,576,304
	Special item - settlements and recoveries					-	3,755,224
	Special item - gain (loss) on disposal of capital assets					45,084	11,000
	Total General Revenues and Special Items					82,229,536	78,342,528
	Change in Net Position					7,533,218	13,568,911
	Net Position - Beginning of Year					420,338,416	406,769,505
	Net Position - End of Year					$ 427,871,634	$ 420,338,416

The accompanying notes are an integral part of these financial statements.

MAJOR GOVERNMENTAL FUNDS

Fund Title	Fund Description
General Fund	Primary operating fund of the City: accounts for all activities except those legally or administratively required to be accounted for in other funds.
SB325 Sales Tax	Accounts for sales tax revenue collected in accordance with Senate Bill 325 to be used for transit services, construction and maintenance of streets.
Low and Moderate Income Housing Asset Special Revenue	Accounts for the housing assets of the former Rocklin Redevelopment Agency transferred to the City of Rocklin as Housing Successor.
Traffic Circulation Impact Fee Capital Projects	Accounts for activities related to traffic congestion management.
Streets Grants	Accounts for funds received as reimbursement or grants related to street capital projects.

City of Rocklin
Balance Sheet
Governmental Funds
June 30, 2024
(With Comparative Totals for June 30, 2023)

	Major Funds			
ASSETS	General Fund	SB325 Sales Tax	Low and Moderate Income Housing Asset Fund	Traffic Circulation Impact Fee Fund
Cash and investments	$ 60,420,174	$ 7,448,801	$ 9,444,721	$ 18,727,783
Restricted cash and investments	-	-	-	-
Receivables:				
Taxes	6,441,279	-	-	-
Interest receivable	-	-	-	10,804
Intergovernmental	-	-	-	-
Other receivables	1,404,409	-	-	29,100
Due from other funds	993,512	-	-	-
Prepaid items	10,738	-	-	-
Leases receivable	3,830,409	-	-	-
Loans receivable	13,225	-	3,868,886	1,172,177
Total assets	$ 73,113,746	$ 7,448,801	$ 13,313,607	$ 19,939,864
LIABILITIES, FUND BALANCES AND DEFERRED INFLOWS OF RESOURCES				
Liabilities:				
Accounts payable and accrued liabilities	$ 4,225,642	$ 1,924,107	$ 26,500	$ 131,755
Deposits	802,833	-	-	204,001
Due to other funds	-	-	-	-
Unearned revenues	1,086,627	75,511	-	-
Other liabilities	12,969	25,159	-	-
Compensated absences	1,723,548	-	-	-
Total liabilities	7,851,619	2,024,777	26,500	335,756
DEFERRED INFLOWS OF RESOURCES				
Leases receivable	3,791,504	-	-	-
Unavailable revenue	-	-	-	502,511
Total deferred inflows of resources	3,791,504	-	-	502,511
Fund Balances:				
Nonspendable:				
Endowments	-	-	-	-
Leases receivable	38,905	-	-	-
Long-term receivables	13,225	-	-	-
Restricted	-	5,424,024	13,287,107	669,666
Committed	33,135,509	-	-	18,431,931
Unassigned (Deficit)	28,282,984	-	-	-
Total fund balances	61,470,623	5,424,024	13,287,107	19,101,597
Total liabilities, fund balances and deferred inflows of resources	$ 73,113,746	$ 7,448,801	$ 13,313,607	$ 19,939,864

The accompanying notes are an integral part of these financial statements.

Continued

City of Rocklin
Balance Sheet
Governmental Funds
June 30, 2024
(With Comparative Totals for June 30, 2023)

	Major Funds		Total Governmental Funds	
ASSETS	Streets Grants	Nonmajor Governmental Funds	2024	2023
Cash and investments	$ -	$ 30,749,641	$ 126,791,120	$ 108,139,102
Restricted cash and investments	-	1,764,583	1,764,583	2,260,219
Receivables:				
Taxes	-	738,485	7,179,764	5,941,835
Interest receivable	-	-	10,804	-
Intergovernmental	1,592,964	373,868	1,966,832	5,031,924
Other receivables	555,413	150,219	2,139,141	1,663,738
Due from other funds	-	-	993,512	4,972,104
Prepaid items	-	-	10,738	4,646
Leases receivable	-	-	3,830,409	4,039,063
Loans receivable	-	318,986	5,373,274	6,193,474
Total assets	$ 2,148,377	$ 34,095,782	$ 150,060,177	$ 138,246,105
LIABILITIES, FUND BALANCES AND DEFERRED INFLOWS OF RESOURCES				
Liabilities:				
Accounts payable and accrued liabilities	$ 1,529,798	$ 1,810,027	$ 9,647,829	$ 6,597,923
Deposits	-	-	1,006,834	1,080,620
Due to other funds	618,580	374,932	993,512	4,972,104
Unearned revenues	-	542,008	1,704,146	2,376,225
Other liabilities	-	-	38,128	5,329
Compensated absences	-	-	1,723,548	1,768,748
Total liabilities	2,148,378	2,726,967	15,113,997	16,800,949
DEFERRED INFLOWS OF RESOURCES				
Leases receivable	-	-	3,791,504	4,011,697
Unavailable revenue	1,292,505	170,959	1,965,975	1,586,893
Total deferred inflows of resources	1,292,505	170,959	5,757,479	5,598,590
Fund Balances:				
Nonspendable:				
Endowments	-	491,455	491,455	491,455
Leases receivable	-	-	38,905	27,366
Long-term receivables	-	-	13,225	33,613
Restricted	-	17,705,222	37,086,019	35,521,436
Committed	-	13,172,136	64,739,576	62,416,694
Unassigned (Deficit)	(1,292,506)	(170,957)	26,819,521	17,356,002
Total fund balances	(1,292,506)	31,197,856	129,188,701	115,846,566
Total liabilities, fund balances and deferred inflows of resources	$ 2,148,377	$ 34,095,782	$ 150,060,177	$ 138,246,105

The accompanying notes are an integral part of these financial statements.

Concluded

City of Rocklin
Reconciliation of the Government Funds Balance Sheet to the Government-Wide Statement of Net Position
June 30, 2024

Total Fund Balances - Total Governmental Funds	$ 129,188,701
Amounts reported for governmental activities in the Statement of Net Position were different because:	
Capital assets used in governmental activities were not current financial resources. Therefore, they were not reported in the Governmental Funds Balance Sheet. The capital assets were adjusted as follows:	
Capital assets	603,692,762
Less: accumulated depreciation	(273,509,711)
Total Capital Assets	330,183,051
Interest payable on long-term debt did not require current financial resources. Therefore, interest payable was not reported as a liability in Governmental Funds Balance Sheet.	(43,000)
Internal service funds are used by management to charge the costs of vehicle maintenance and various insurance costs to individual funds. The assets and liabilities of the internal service funds are included in the governmental activities in the Statement of Net Position.	19,850,283
Benefit plan adjustments from timing differences, including contributions made to benefit plans that reduce the net benefit liability in the next fiscal year, the impact from changes in proportionate shares on beginning balances, and differences between projected and actual earnings on plan investments, have been reported as deferred outflows of resources.	32,073,804
Benefit plan adjustments from timing differences, including changes in assumptions, differences between expected and actual experiences, changes in proportionate shares related to contributions and differences between projected and actual earnings on plan investments, have been reported as deferred inflows of resources.	(4,391,624)
Certain revenues were recorded as deferred inflows of resources in the governmental funds because they did not meet the revenue recognition criteria of availability. However, they were previously included as revenue in the Government-Wide Statement of Activities under the full accrual basis.	1,965,975
Liabilities were reported for certain revenues that were not available to pay current period expenditures and were reported as unearned in the fund statements.	1,704,146
Long-term debt defeasances are reported in the funds as other financing uses based on cash payments related to the repayment of debt. However, the difference between the refunded debt and the refunding debt is reported as a deferred gain or loss in the government-wide statement of net position.	(663,307)
Long-term obligations were not due and payable in the current period. Therefore, they were not reported in the Governmental Funds Balance Sheet. The long-term liabilities were adjusted as follows:	
Long-term debt	(9,176,107)
Compensated absences	(1,810,484)
Net pension liability	(66,883,471)
Net OPEB liability	(4,126,333)
Total Long-Term Obligations	(81,996,395)
Net Position of Governmental Activities	$ 427,871,634

The accompanying notes are an integral part of these financial statements.

City of Rocklin

Statement of Revenues, Expenditures, and Changes in Fund Balances
Governmental Funds
For the Year Ended June 30, 2024
(With Comparative Totals for June 30, 2023)

	Major Funds			
	General Fund	SB325 Sales Tax	Low and Moderate Income Housing Asset Fund	Traffic Circulation Impact Fee Fund
REVENUES				
Taxes and assessments	$ 51,827,365	$ 4,940,006	$ -	$ 846,471
Licenses and permits	3,473,771	-	-	-
Fines and forfeitures	184,117	-	-	-
Intergovernmental	868,230	407,467	-	502,511
Charges for services	2,915,689	-	-	-
Use of money and property	4,994,199	206,821	439,609	661,818
Contributions and donations	3,111,744	-	-	-
Other revenues	646,646	-	-	-
Total Revenues	68,021,761	5,554,294	439,609	2,010,800
EXPENDITURES				
Current:				
General government	15,357,333	118,248	39,429	-
Public safety	33,426,901	-	-	-
Public works	3,636,685	2,648,899	-	-
Parks and recreation	5,083,514	-	-	-
Community development	4,929,487	333,160	113,485	4,913
Capital outlay	3,684,277	2,876,896	-	238,757
Debt service:				
Principal	2,686	-	-	-
Interest and fiscal charges	10,249	-	-	-
Total Expenditures	66,131,132	5,977,203	152,914	243,670
Excess (Deficiency) of Revenues over Expenditures	1,890,629	(422,909)	286,695	1,767,130
OTHER FINANCING SOURCES (USES)				
Settlements and recoveries	-	-	-	-
Transfers in	5,918,712	-	3,200	-
Transfers out	(558,874)	(821,653)	(143,706)	(84,792)
Total Other Financing Sources (Uses)	5,359,838	(821,653)	(140,506)	(84,792)
Net Change in Fund Balances	7,250,467	(1,244,562)	146,189	1,682,338
Fund Balances Beginning	54,220,156	6,668,586	13,140,918	17,419,259
Fund Balances Ending	$ 61,470,623	$ 5,424,024	$ 13,287,107	$ 19,101,597

The accompanying notes are an integral part of these financial statements.

Continued

City of Rocklin

Statement of Revenues, Expenditures, and Changes in Fund Balances
Governmental Funds
For the Year Ended June 30, 2024
(With Comparative Totals for June 30, 2023)

	Major Funds		Total Governmental Funds	
	Streets Grants	Nonmajor Governmental Funds	2024	2023
REVENUES				
Taxes and assessments	$ -	$ 18,351,283	$ 75,965,125	$ 71,681,028
Licenses and permits	-	54,517	3,528,288	3,414,000
Fines and forfeitures	-	86,155	270,272	297,009
Intergovernmental	2,169,331	1,732,462	5,680,001	15,049,309
Charges for services	-	1,229,102	4,144,791	2,450,964
Use of money and property	-	765,067	7,067,514	4,180,746
Contributions and donations	-	792,565	3,904,309	7,304,428
Other revenues	-	170,143	816,789	565,500
Total Revenues	2,169,331	23,181,294	101,377,089	104,942,984
EXPENDITURES				
Current:				
General government	-	270,451	15,785,461	17,432,399
Public safety	-	294,846	33,721,747	32,773,240
Public works	-	6,361,734	12,647,318	14,083,908
Parks and recreation	-	2,663,316	7,746,830	7,323,934
Community development	-	237,455	5,618,500	5,033,262
Capital outlay	2,569,719	1,526,313	10,895,962	26,314,448
Debt service:				
Principal	-	1,314,557	1,317,243	1,294,760
Interest and fiscal charges	-	297,245	307,494	332,278
Total Expenditures	2,569,719	12,965,917	88,040,555	104,588,229
Excess (Deficiency) of Revenues over Expenditures	(400,388)	10,215,377	13,336,534	354,755
OTHER FINANCING SOURCES (USES)				
Settlements and recoveries	-	-	-	3,755,224
Transfers in	-	1,048,839	6,970,751	14,301,067
Transfers out	-	(5,356,125)	(6,965,150)	(15,145,567)
Total Other Financing Sources (Uses)	-	(4,307,286)	5,601	2,910,724
Net Change in Fund Balances	(400,388)	5,908,091	13,342,135	3,265,479
Fund Balances Beginning	(892,118)	25,289,765	115,846,566	112,581,087
Fund Balances Ending	$ (1,292,506)	$ 31,197,856	$ 129,188,701	$ 115,846,566

The accompanying notes are an integral part of these financial statements.

Concluded

City of Rocklin

Reconciliation of the Governmental Funds Statement of Revenues, Expenditures and Changes in Fund Balances to the Government-Wide Statement of Activities

For the Year Ended June 30, 2024

Net Change in Fund Balances - Total Governmental Funds	$	13,342,135
Amounts reported for governmental activities in the Statement of Activities were different because:		
Governmental Funds report capital outlay as expenditures. However, in the Government-Wide Statement of Activities, the cost of those assets was allocated over their estimated useful lives as depreciation expense.		
Capital additions		8,996,811
Depreciation expense		(13,597,191)
Internal service funds are used by management to charge the costs of vehicle maintenance, and various insurance costs to individual funds. The net revenue or (excess expenses) of the internal service funds is reported with government activities.		2,570,849
Certain revenues were not recorded or recorded as unearned revenue in the governmental funds because they did not meet the revenue recognition criteria of availability. However, they were included as revenue in the Government-Wide Statement of Activities under the full accrual basis.		(672,079)
Certain revenues were recorded as deferred inflows of resources in the governmental funds because they did not meet the revenue recognition criteria of availability. However, they were included as revenue in the Government-Wide Statement of Activities under the full accrual basis.		379,082
Long-term compensated absences and claims payables were reported in the Government-Wide Statement of Activities, but they did not require the use of current financial resources and were not reported as expenditures in governmental funds.		
Compensated absences		251,340
In governmental funds, actual contributions to pension plans are reported as expenditures in the year incurred. However, in the Government-Wide Statement of Activities, only the current year pension expense as noted in the plans' valuation reports is reported as an expense, as adjusted for deferred inflows and outflows of resources.		(5,462,757)
Repayment of long-term debt was an expenditure in governmental funds, but the repayment reduced long-term liabilities in the Government-Wide Statement of Net Position.		1,565,896
Certain expenses reported in the statement of activities do not require the use of current financial resources and are not reported as expenditures in the fund statements as follows:		
Other postemployment benefits adjustments and deferrals		140,404
Interest expense on long-term debt was reported in the Government-Wide Statement of Activities, but it did not require the use of current financial resources. Therefore, interest expense was not reported as expenditures in governmental funds. The following amount represented the net change in accrued interest from prior year.		18,779
Change in Net Position of Governmental Activities	$	7,533,218

The accompanying notes are an integral part of these financial statements.

City of Rocklin
Statement of Net Position
Internal Service Funds
June 30, 2024
(With Comparative Totals for June 30, 2023)

	Totals	
	2024	2023
ASSETS		
Current assets:		
Cash and investments	$ 15,633,958	$ 13,720,412
Accounts receivable	57,268	-
Inventory and other	47,636	50,567
Total current assets	15,738,862	13,770,979
Non-current assets:		
Capital assets - net	7,067,481	6,063,575
Total non-current assets	7,067,481	6,063,575
Total assets	$ 22,806,343	$ 19,834,554
LIABILITIES		
Current liabilities:		
Accounts payable and accrued liabilities	$ 134,810	$ 70,785
Claims payable	161,176	145,345
Compensated absences - current portion	9,716	10,475
Total current liabilities	305,702	226,605
Non-current liabilities:		
Claims payable	2,650,110	2,327,282
Compensated absences	248	1,233
Total non-current liabilities	2,650,358	2,328,515
Total liabilities	$ 2,956,060	$ 2,555,120
NET POSITION		
Net Investment in capital assets	$ 7,067,481	$ 6,063,575
Unrestricted	12,782,802	11,215,859
Total net position	$ 19,850,283	$ 17,279,434

The accompanying notes are an integral part of these financial statements.

City of Rocklin
Statement of Revenues, Expenses and Changes in Fund Net Position
Internal Service Funds
For the Year Ended June 30, 2024
(With Comparative Totals for June 30, 2023)

	Totals	
	2024	2023
OPERATING REVENUES		
Charges for services	$ 7,166,809	$ 5,911,674
Intergovernmental	1,806	2,804
Other revenue	27,360	11,047
Total operating revenues	7,195,975	5,925,525
OPERATING EXPENSES		
Salaries and benefits	2,391,513	2,266,381
Services and supplies	3,457,006	2,554,476
Depreciation	1,033,923	1,003,751
Total operating expenses	6,882,442	5,824,608
Operating income (loss)	313,533	100,917
NONOPERATING REVENUES (EXPENSES)		
Gain (loss) on sale of assets	45,135	11,000
Investment earnings	318,631	136,016
Total nonoperating revenues (expenses)	363,766	147,016
Income (loss) before operating transfers	677,299	247,933
Transfers in	54,550	898,000
Transfers out	(60,151)	(53,500)
Income (loss) before capital contributions	671,698	1,092,433
Capital contributions	1,899,151	402,595
Change in net position	2,570,849	1,495,028
Total net position - beginning	17,279,434	15,784,406
Total net position - ending	$ 19,850,283	$ 17,279,434

The accompanying notes are an integral part of these financial statements.

City of Rocklin
Statement of Cash Flows
Internal Service Funds
For the Year Ended June 30, 2024
(With Comparative Totals for June 30, 2023)

	Totals	
	2024	2023
Cash flows from operating activities:		
Receipts from interfund services provided	$ 7,109,541	$ 5,911,993
Other receipts	29,166	13,851
Payments to suppliers for goods and services	(3,055,223)	(2,927,388)
Payments to employees for services	(2,389,425)	(2,275,292)
Net cash provided (used) by operating activities	1,694,059	723,164
Cash flows from noncapital financing activities:		
Interfund transactions	(5,601)	844,500
Net cash provided (used) by noncapital financing activities	(5,601)	844,500
Cash flows from capital financing activities:		
Purchases (sales) of capital assets - net	(1,992,694)	(423,782)
Proceeds from capital contributions	1,899,151	402,595
Net cash provided (used) by capital financing activities	(93,543)	(21,187)
Cash flows from investing activities:		
Investment income received	318,631	136,016
Net cash provided (used) by investing activities	318,631	136,016
Net increase (decrease) in cash and cash equivalents	1,913,546	1,682,493
Cash and cash equivalents - beginning	13,720,412	12,037,919
Cash and cash equivalents - ending	$ 15,633,958	$ 13,720,412
Reconciliation of operating income to net cash provided (used) by operating activities:		
Operating income (loss)	$ 313,533	$ 100,917
Adjustments to reconcile operating income (loss) to net cash provided (used) by operating activities:		
Depreciation	1,033,923	1,003,751
Change in operating assets and liabilities:		
Accounts receivable	(57,268)	319
Inventory	2,931	(2,961)
Accounts payable and accrued liabilities	64,025	(15,529)
Claims payable	338,659	(360,303)
Compensated absences	(1,744)	(3,030)
Net cash provided (used) by operating activities	$ 1,694,059	$ 723,164

The accompanying notes are an integral part of these financial statements.

City of Rocklin
Statement of Fiduciary Net Position
Fiduciary Funds
June 30, 2024

	Successor Agency Private-Purpose Trust Funds	Custodial Funds	Total Fiduciary Funds
ASSETS			
Current assets:			
Cash and investments	$ 1,261,507	$ 5,252,408	$ 6,513,915
Cash and investment with trustee/fiscal agent	794	4,109,390	4,110,184
Accounts receivable	-	70,838	70,838
Total current assets	1,262,301	9,432,636	10,694,937
Non-current assets:			
Land	480,576	-	480,576
Total assets	$ 1,742,877	$ 9,432,636	$ 11,175,513
LIABILITIES			
Current liabilities:			
Unearned revenues	$ 650,943	$ -	$ 650,943
Interest payable	239,908	-	239,908
Due within one year	940,390	-	940,390
Total current liabilities	1,831,241	-	1,831,241
Noncurrent liabilities:			
Bonds payable - net	15,845,076	-	15,845,076
Total liabilities	$ 17,676,317	$ -	$ 17,676,317
NET POSITION			
Held in trust for Redevelopment Dissolution	$ (15,933,440)	$ -	$ (15,933,440)
Restricted for individuals, organizations and other governments	-	9,432,636	9,432,636
Total Net Position	$ (15,933,440)	$ 9,432,636	$ (6,500,804)

The accompanying notes are an integral part of these financial statements.

City of Rocklin
Statement of Changes in Fiduciary Net Position
Fiduciary Funds
For the Year Ended June 30, 2024

	Successor Agency Private-Purpose Trust Funds	Custodial Funds	Total Fiduciary Funds
ADDITIONS			
Property taxes	$ 1,449,548	$ -	$ 1,449,548
Tax assessments	-	4,405,204	4,405,204
Investment earnings	13,549	333,442	346,991
Other revenue	-	11,430	11,430
Total additions	1,463,097	4,750,076	6,213,173
DEDUCTIONS			
Professional services	7,750	107,000	114,750
Fees and charges	70,000	44,117	114,117
Repairs and maintenance	1,600	-	1,600
Debt service principal	-	1,817,622	1,817,622
Debt service interest	620,918	2,354,341	2,975,259
Total deductions	700,268	4,323,080	5,023,348
Change in net position	762,829	426,996	1,189,825
Total net position - beginning	(16,696,269)	9,005,640	(7,690,629)
Total net position - ending	$ (15,933,440)	$ 9,432,636	$ (6,500,804)

The accompanying notes are an integral part of these financial statements.

ROCKLIN

CALIFORNIA

NOTES TO FINANCIAL STATEMENTS

This page intentionally left blank

NOTE 1 - SUMMARY OF SIGNIFICANT ACCOUNTING POLICIES

The City of Rocklin (City) was incorporated in 1893 under the laws and regulations of the State of California (State). The City operates under a City Council/Manager form of government and provides the following services: general government, community development, public safety, parks and recreation, and public works.

The basic financial statements of the City have been prepared in conformity with generally accepted accounting principles (GAAP) as applied to governmental agencies. The Governmental Accounting Standards Board (GASB) is the accepted standard setting body for establishing governmental accounting and financial reporting principles. The more significant of the City's accounting policies are described below.

A. Financial Reporting Entity

The City operates as a self-governing local government unit within the State. It has limited authority to levy taxes and has the authority to determine user fees for the services that it provides. The City's main funding sources include property taxes, sales taxes, other intergovernmental revenue from state and federal sources, user fees, and federal and state financial assistance.

The financial reporting entity consists of (a) the primary government, the City, (b) organizations for which the primary government is financially accountable, and (c) other organizations for which the primary government is not accountable, but for which the nature and significance of their relationship with the primary government are such that exclusion would cause the reporting entity's financial statements to be misleading or incomplete. Financial accountability is defined as the appointment of a voting majority of the component unit's board, and either (a) the City has the ability to impose its will on the organization, or (b) there is a potential for the organization to provide a financial benefit to or impose a financial burden on the City.

As required by GAAP, these financial statements present the government and its component unit, an entity for which the government is considered to be financially accountable. This component unit is reported on a blended basis. A blended component unit, although a legally separate entity, is, in substance, part of the government's operations and so data from this unit is combined with data of the primary government. The financial statement of the individual component unit, if applicable as indicated below, may be obtained from the City of Rocklin website.

The City's reporting entity includes the following blended component unit:

Rocklin Public Financing Authority
The Rocklin Public Financing Authority (Authority) was formed on December 13, 1994, as a joint powers authority between the City and the former Redevelopment Agency to serve as a financing mechanism for various capital projects. Upon the dissolution of the Rocklin Redevelopment Agency on February 1, 2012, the City appointed itself successor agency governed by an oversight board consisting of members from all taxing authorities in the redevelopment area to wind up all redevelopment activities, which consisted primarily of debt. Because of the limited authority of the successor, their membership in the Authority is also limited as the successor cannot obligate the Authority or issue new debt on its own. The City Council acts as the governing board in a concurrent session. The Authority provides services solely for the benefit of the City and is presented in the governmental activities in the fund financial statements as a blended component unit.

B. Basis of Presentation, Accounting and Measurement Focus

The accounts of the City are organized on the basis of funds, each of which is considered a separate accounting entity. The operations of each fund are accounted for with a separate set of self-balancing accounts that comprise its assets, liabilities, fund equity, revenues, and expenditures or expenses, as appropriate. Governmental resources are allocated to and accounted for in individual funds based upon the purposes for which they are to be spent and the means by which spending activities are controlled.

Government-Wide Financial Statements

The City's government-wide financial statements include a *Statement of Net Position* and a *Statement of Activities*. These statements present summaries of governmental activities for the City. Fiduciary activities of the City are not included in these statements. *Governmental activities*, which normally are supported by taxes and intergovernmental revenues, are reported separately from *business-type activities*, which rely to a significant extent on fees and charges for support. The City did not have any business-type activities during the year.

These statements are presented on an "economic resources" measurement focus and the accrual basis of accounting. Accordingly, all of the City's assets, deferred outflows of resources, liabilities, deferred inflows of resources (including capital assets, as well as infrastructure assets, and long-term liabilities), are included in the accompanying *Statement of Net Position*. The *Statement of Activities* presents changes in net position. Under the accrual basis of accounting, revenues are recognized in the period in which they are earned while expenses are recognized in the period in which the liability is incurred. The Statement of Activities demonstrates the degree to which the direct expenses of a given function or segment is offset by program revenues. *Direct expenses* are those clearly identifiable with a specific function or segment. In conformity with the City's indirect cost allocation plan, certain indirect costs are included in the program expense reported for individual functions and activities.

Certain types of transactions are reported as program revenues for the City in three categories:

- Charges for services
- Operating grants and contributions
- Capital grants and contributions

Separate financial statements are provided for governmental funds, proprietary funds, and fiduciary funds, even though the fiduciary funds are excluded from the government-wide financial statements. Major individual governmental funds are reported as separate columns in the fund financial statements.

Certain eliminations have been made as prescribed by GASB Statement No. 34 in regards to interfund activities, payables, and receivables. All internal balances in the Statement of Net Position have been eliminated. The following interfund activities have been eliminated:

- Transfers in/Transfers out
- Internal Service Fund charges

Fund Financial Statements

Governmental Funds

Governmental fund financial statements include a *Balance Sheet* and a *Statement of Revenues, Expenditures and Changes in Fund Balances* for all major governmental funds and non-major funds aggregated. An accompanying schedule is provided to reconcile and explain the differences in fund balances in these statements to the net position presented in the government-wide financial statements. The City has presented all major funds that met the applicable criteria.

All governmental funds are accounted for on a spending or "current financial resources" measurement focus and the modified accrual basis of accounting. Accordingly, only current assets, deferred outflows of resources, current liabilities, and deferred inflows of resources are included on the balance sheets. The *Statement of Revenues, Expenditures and Changes in Fund Balances* present increases (revenues and other financing sources) and decreases (expenditures and other financing uses) in net current assets.

Under the modified accrual basis of accounting, revenues are recognized in the accounting period in which they become both measurable and available to finance expenditures of the current period. Accordingly, revenues are recorded when received in cash, except that revenues subject to accrual (up to 60 days after year-end) are recognized when due. The primary revenue sources, which have been treated as susceptible to accrual by the City, are property tax, sales tax, special assessments, intergovernmental revenues, other taxes, interest revenue, rental revenue and certain charges for services. Fines, forfeitures, licenses and permits are not susceptible to accrual because they are usually not measurable until received in cash. Expenditures are recorded in the accounting period in which the related fund liability is incurred.

Unearned revenues arise when potential revenues do not meet both the "measurable" and "available" criteria for recognition in the current period. Unearned revenues also arise when the government receives resources before it has a legal claim to them, as when grant monies are received prior to incurring qualifying expenditures. In subsequent periods when both revenue recognition criteria are met or when the government has a legal claim to the resources, the unearned revenue is removed from the combined balance sheet and revenue is recognized.

The following funds are major funds:

General Fund

The General Fund is used to account for resources traditionally associated with the City, which are not required legally or by sound financial management to be accounted for in another fund. The General Fund pays for the City's general operating expenditures, the fixed charges, and the capital costs that are not paid through other funds. The General Fund is a combination of other funds, which include, Quarry Park Amphitheater, Quarry Park Adventures Reserve, Streets Maintenance Reserve, Economic Development Reserve, Technology Fee, Retirees Health, Boroski Landfill Monitoring, ADA, and Parks Maintenance Reserve.

Community Facilities District No. 10

This fund was established to account for capital projects related to Community Facilities District No. 10 that was formed in 2005 to issue bonds for the construction of transportation, wastewater system, drainage, and landscaping facilities and other public improvements for development within the Whitney Ranch District.

Low and Moderate Income Housing Asset Fund
This special revenue fund accounts for the administration and operation of the City's low and moderate income housing program of the former Rocklin Redevelopment Agency transferred to the City of Rocklin as the Housing Successor.

Traffic Circulation Impact Fee Capital Projects Fund
This capital projects fund accounts for activities related to congestion management and traffic relief.

SB325 Sales Tax Fund
This fund accounts for sales tax revenue collected in accordance with Senate Bill 325 to be used for transit services, construction and maintenance of streets.

Streets Grants Fund
This fund accounts for funds received as reimbursement or grants related to street capital projects.

Additionally, the City reports the following nonmajor fund types of governmental funds:

Special Revenue Funds
Special revenue funds account for and report the proceeds of specific revenue sources that are restricted, committed or assigned to specific purposes other than debt service or capital projects.

Capital Project Funds
Capital project funds account for and report financial resources that are restricted, committed, or assigned to expenditure for capital outlays, including the acquisition or construction of capital facilities and other capital assets in governmental funds.

Debt Service Funds
Debt service funds account for the accumulation of resources for, and payment on, long-term obligation debt principal and interest.

Permanent Funds
Permanent funds account for and report financial resources for the principal corpus of endowments where only the investment earnings can be spent on specified purposes.

Proprietary Funds

In the fund financial statements, proprietary funds are presented using the accrual basis of accounting. Revenues are recognized when they are earned and expenses are recognized when the related goods or services are delivered. In the fund financial statements, proprietary funds are presented using the "economic resources measurement focus". This means all assets, deferred outflows of resources, liabilities (whether current or noncurrent) and deferred inflows of resources associated with their activities are included on their balance sheets. Proprietary fund type operating statements present increases (revenues) and decreases (expenses) in total net position.

Proprietary fund operating revenues, such as charges for services, result from exchange transactions associated with principal activity of the fund. Exchange transactions are those in which each party receives and gives up essentially equal value. Non-operating revenues, such as subsidies, taxes, and investment earnings result from nonexchange transactions or ancillary activities.

The City's internal service funds are proprietary funds. Internal service funds account for charges to City departments for services provided, on a cost reimbursement basis. Amounts paid to acquire capital assets are capitalized as assets in the internal service funds financial statements.

Fleet Management Internal Service Fund
The Fleet Management Internal Service Fund is used to account for the financing of the City's fleet services provided by one City department to other departments on a cost-reimbursement basis. The Fleet Management Internal Service Fund balances and activities have been combined with governmental activities in the government-wide financial statements.

Risk Management Internal Service Fund
The Risk Management Internal Service Fund is used to account for and finance the risk management functions for the City. This includes: general liability, workers compensation, property damage, dental, vision, and other insurance expenditures and also holds resources for Self-Insured Losses and Disaster Contingency. The Risk Management Internal Service Fund balances and activities have been combined with governmental activities in the government-wide financial statements.

Fiduciary Funds

Private Purpose Trust Funds
Private Purpose Trust Funds account for resources held for other individuals and entities in a manner similar to private enterprise.

Custodial Funds
Custodial Funds are used to account for assets held by the City in a trustee capacity or as a custodian for individuals, private organizations, other governments and/or other funds. Custodial funds are used to report fiduciary activities that are not required to be reported in pension (and other employee benefits) trust funds, investment trust funds, or private-purpose trust funds. Custodial funds are accounted for using an economic resource measurement focus and require a resource flow statement.

C. Cash Deposits and Investments

The City pools its available cash for investment purposes. The City's cash and cash equivalents are considered to be cash on hand, demand deposits, and short-term investments with original maturity of three months or less from the date of acquisition. Cash and cash equivalents are combined with investments and displayed as Cash and Investments.

Deposit and Investment Risk Disclosures - In accordance with GASB Statement No. 40, *Deposit and Investment Disclosures* (Amendment of GASB Statement No. 3), certain disclosures are required for Deposit and Investment Risks in the following areas, if applicable:

- Interest Rate Risk
- Credit Risk
  - Overall
  - Custodial Credit Risk
  - Concentrations of Credit Risk
- Foreign Currency Risk

Other disclosures are specified including use of certain methods to present deposits and investments, highly sensitive investments, credit quality at year-end and other disclosures.

The City participates in the Local Agency Investment Fund (LAIF), an investment pool for local governments and special districts managed by the State of California. Under Federal Law, the State of California cannot declare bankruptcy; therefore, deposits in LAIF shall not be subject to either of the following: (a) transfer or loan pursuant to Government Code Sections 16310, 16312, or 16313, or (b) impoundment or seizure by any state official or state agency.

The City participates in the Placer County Treasurers Investment Portfolio, an investment pool for local governments, school districts, and special districts in Placer County. Investments are made in accordance with Government Code Section 27000.5, "When investing, reinvesting, purchasing, acquiring, exchanging, selling, and managing public funds, the primary objective of the county treasurer is to safeguard the principal of the funds under his or her control. The secondary objective is to meet the liquidity needs of the depositor. The third objective is to achieve a return on the funds under his or her control."

Investments are recorded at fair value in accordance with GASB Statement No. 72, *Fair Value Measurement and Application*. Accordingly, the change in fair value of investments is recognized as an increase or decrease to investment assets and investment income.

Fair value is defined as the price that would be received to sell an asset or paid to transfer a liability in an orderly transaction. In determining this amount, three valuation techniques are available:

- Market approach - This approach uses prices generated for identical or similar assets or liabilities. The most common example is an investment in a public security traded in an active exchange such as the New York Stock Exchange.
- Cost approach - This technique determines the amount required to replace the current asset. This approach may be ideal for valuing donations of capital assets or historical treasures.
- Income approach - This approach converts future amounts (such as cash flows) into a current discounted amount.

Each of these valuation techniques requires inputs to calculate a fair value. Observable inputs have been maximized in fair value measures, and unobservable inputs have been minimized.

D. Interfund Receivables and Payables

Items classified as interfund receivables/payables are referred to as "advances to/advances from other funds" or as "due to/from other funds". Due to/from other funds include short-term lending/borrowing transactions between funds. This classification also includes the current portion of an advance to or from another fund. Advances to/advances from other funds represents non-current portions of any long-term lending/borrowing transactions between funds. This amount will be equally offset by a reserve of fund balance, which indicates that it does not represent available financial resources, and is not available for appropriation.

E. Receivables

In the government-wide statements, receivables consist of all revenues earned at year-end and not yet received. Major receivable balances for the governmental activities include property taxes, sales and use taxes, transient taxes, franchise taxes, intergovernmental subventions, interest earnings, and expense reimbursements.

In the fund financial statements, material receivables in governmental funds include revenue accruals such as property tax, sales tax, transient tax, franchise tax, and intergovernmental subventions since they are usually both measurable and available. Non-exchange transactions collectible but not available, such as property tax, are deferred in the fund financial statements in accordance with the modified accrual basis, but not deferred in the government-wide financial statements in accordance with the accrual basis.

Interest and investment earnings are recorded when earned only if paid within 60 days since they would be considered both measurable and available. The City's experience is that all accounts receivable are collectible; therefore an allowance for doubtful accounts is unnecessary.

F. Loans Receivable

Under the City's housing assistance program, loans are made to qualified individuals and businesses within prescribed project areas for the purpose of housing acquisition, housing rehabilitation and/or economic development. The majority of these loans are on a deferred payback program. Repayments of the outstanding loans are applied to the principal balance of the loan receivable. The long-term portion of loans receivable has been offset by *Unearned Revenues* in the accompanying financial statements, as applicable.

G. Leases Receivable

The City's measures leases receivable at the present value of rent payments expected to be received during the contract term. The City records deferred inflows of resources at the initiation of the contract in an amount equal to the initial recording of the leases receivable plus incentive payments received, if any. The deferred inflow of resources is amortized on a straight-line basis over the term of the contract. If there is no stated rate in the contract and the implicit rate cannot be determined, the City uses its own estimated incremental borrowing rate as the discount rate to measure the leases receivable. The City's estimated incremental borrowing rate is based on its actual incremental borrowing rate for the most recent debt issuance.

H. Inventories

The City maintains an inventory for fuel that is recorded at cost in the Fleet Internal Service Fund and expensed when consumed. The cost of other consumable materials and supplies on hand are immaterial to the financial statements, and the City has therefore chosen to report these items as expenditures/expenses at the time of purchase.

I. Capital Assets

The City's assets are capitalized at historical cost or estimated historical cost, if actual is unavailable, except for donated capital assets. Donated works of art and similar items, and capital assets received in a service concession arrangement, are reported at acquisition value at the date of donation. Policy has set the capitalization threshold for reporting at $10,000 for non-infrastructure capital assets, $5,000 for grant funded non-infrastructure capital assets, and $100,000 for infrastructure capital assets.

Public domain (infrastructure) capital assets include streets, bridges, curbs and gutters, sidewalks, drainage systems, and lighting systems. The accounting treatment of property, plant and equipment (capital assets) depends on whether the assets are used in governmental fund operations or proprietary fund operations and whether they are reported in the government-wide or fund financial statements.

Depreciation/amortization of all exhaustible capital assets is recorded as an allocated expense in the Statement of Activities, with accumulated depreciation/amortization reflected in the Statement of Net Position. Depreciation/amortization is provided over the assets' estimated useful lives using the straight-line method of depreciation. The range of estimated useful lives by asset type is as follows:

Equipment, machinery and vehicles	3-10 years
Facilities and improvements	15 years
Infrastructure	25-50 years
Buildings and building improvements	30 years

Intangible right-to-use lease assets are amortized over the shorter of the lease term or the useful life of the underlying asset, unless the lease contains a purchase option that the City has determined is reasonably certain of being exercised, then the lease asset is amortized over the useful life of the underlying asset.

Intangible right-to-use subscription assets are amortized over the shorter of the subscription term or the useful life of the underlying information technology asset.

In the fund financial statements, capital assets used in governmental fund operations are accounted for as capital outlay expenditures of the governmental fund upon acquisition. Capital assets used in proprietary fund operations are accounted for in the same way as in the government-wide statements.

J. Deferred Outflows/Deferred Inflows

Deferred outflows of resources is a consumption of net assets by the City that is applicable to a future reporting period; for example, prepaid items and deferred charges. Deferred inflows of resources is an acquisition of net assets by the City that is applicable to a future reporting period; for example, unearned revenue and advance collections. The City has deferred outflows and deferred inflows of resources related to the implementation of GASB 68 for pension retirement plans, GASB 75 for Other Post Retirement Benefit Plans, and leases receivables.

K. Interest Payable

In the government-wide financial statements, interest payable on long-term debt is recognized as an incurred liability for governmental fund types. The City has not allocated the interest on long-term debt to departments.

In the fund financial statements, governmental fund types do not recognize the interest payable when the liability is incurred. Interest on long-term debt is recorded in the fund statements when payment is made.

L. Claims Payable

The City records a liability to reflect an actuarial estimate of ultimate uninsured losses for general liability claims. The estimated liability for these claims includes "incurred but not reported" (IBNR) claims. There is no fixed payment schedule to pay these liabilities.

M. Compensated Absences

The City's policies regarding vacation time and compensatory time permit employees to accumulate earned but unused leave, up to limits agreed upon with by individual employee bargaining units. This debt is

estimated based on historical trend analysis, the current portion of which is reported in the General Fund, the remaining balance is shown in the government-wide financial statements.

N. Long-Term Liabilities

The accounting treatment of long-term liabilities depends on whether the assets are used in governmental fund operations or proprietary fund operations and whether they are reported in the government-wide or fund financial statements.

All long-term liabilities to be repaid from governmental resources are reported as liabilities in the government-wide statements. The long-term liabilities consist of Lease Revenue Bonds and unamortized premiums, direct borrowings, the net OPEB liability, the pension obligations, compensated absences, and a liability for claims.

Long-term liabilities for governmental funds are not reported as liabilities in the fund financial statements. The debt proceeds are reported as revenue. Payments of principal and interest reported as expenditures. Long-term liabilities for proprietary funds are reported in the fund statements similar to how they are reported in the government-wide statements. Debt proceeds are reported as liabilities and payments are reported as reductions to the liability and as interest expense.

O. Subscription Based Information Technology Arrangements

The City recognizes subscription liabilities with an initial, individual value of $50,000 or more. The City uses its estimated incremental borrowing rate to measure subscription liabilities unless it can readily determine the interest rate in the arrangement. The City's estimated incremental borrowing rate is based on its actual incremental borrowing rate for the most recent debt issuance.

P. Pensions Expense

For purposes of measuring the net pension liability and deferred outflows/inflows of resources related to pensions, and pension expense, information about the fiduciary net position of the City's California Public Employees' Retirement System (CalPERS) plans (the Plans) and additions to/deductions from the Plans' fiduciary net position have been determined on the same basis as they are reported by CalPERS. For this purpose, benefit payments (including refunds of employee contributions) are recognized when due and payable in accordance with the benefit terms. Investments are reported at fair value.

Q. Other Postemployment Benefits Other Than Pensions (OPEB)

For purposes of measuring the net OPEB liability, deferred outflows of resources and deferred inflows of resources related to OPEB, and OPEB expense information about the fiduciary net position of the City's Retiree Benefits Plan (the OPEB Plan) and additions to/deductions from the OPEB Plan's fiduciary net position have been determined on the same basis as they are reported by the OPEB Plan. For this purpose, the OPEB Plan recognizes benefit payments when due and payable in accordance with the benefit terms. Investments are reported at fair value, except for money market investments and participating interest-earning investment contracts that have a maturity at the time of purchase of one year or less, which are reported at cost.

Valuation Date	June 30, 2022
Measurement Date	June 30, 2023
Measurement Period	July 1, 2022 to June 30, 2023

R. Fund Balances

In accordance with GASB 54*, Fund Balance Reporting and Governmental Fund Type Definitions*, the City classifies governmental fund balances as follows:

Nonspendable
- Assets that will never convert to cash (prepaid items, inventory).
- Assets that will not convert to cash soon enough to affect the current period (long-term loans receivable).
- Resources that must be maintained intact pursuant to legal or contractual requirements (the principal of an endowment).

Restricted
- Resources that are subject to externally enforceable legal restrictions imposed by parties outside the City (Creditors, Grantors, Contributors, other Governments).
- Resources that are subject to limitations imposed by law through constitutional provisions or legislation (Gas Tax).

Committed
- Self-imposed limitations set in place prior to the end of the period (encumbrances, economic contingencies, and uncertainties).
- Limitation established at the highest level of decision-making (Council) and requires formal action at the same level to remove.
- Council resolution is required to establish, modify, or rescind a fund balance commitment.

Assigned
- Amounts in excess of nonspendable, restricted, and committed fund balance in funds other than the General Fund are reported as assigned fund balance.

Unassigned
- Residual net resources.
- Total fund balance in the General Fund in excess of nonspendable, restricted, committed, and assigned fund balance (surplus).
- Excess of nonspendable, restricted, and committed fund balance over total fund balance (deficit).

Flow Assumption / Spending Order Policy
When expenditures are incurred for purposes for which both restricted and unrestricted fund balance is available, the City considers restricted funds to be spent first. When expenditures are incurred for which committed, assigned, or unassigned fund balances are available, the City considers amounts to be spent first out of committed funds, then assigned funds, and finally, unassigned funds, as needed, unless the City Council has directed otherwise.

S. Net Position

In the government-wide financial statements, net position is classified in the following categories:

Net Investment in Capital Assets
This amount consists of capital assets net of accumulated depreciation and reduced by outstanding debt that is attributed to the acquisition, construction, or improvement of the assets. In addition, deferred outflows of resources and deferred inflows of resources that are attributable to the acquisition, construction, or

improvement of those assets or related debt are also included in the net investment in capital assets component of net position.

Restricted Net Position
This amount is restricted by external creditors, grantors, contributors, or laws and regulations of other governments. Certain proceeds from debt and loans are reported as restricted net position because their use is limited by applicable debt or other covenants.

Unrestricted Net Position
This amount is net position that does not meet the definition of "net investment in capital assets" or "restricted net position."

The detail of amounts reported for each of the above defined net position categories is reported in the government-wide Statement of Net Position.

Use of Restricted/Unrestricted Net Position
When an expense is incurred for purposes for which both restricted and unrestricted net position is available, the City's policy is to apply restricted net position first.

T. Interfund Transactions

Interfund services provided and used are accounted for as revenue, expenditures or expenses, as appropriate. Transactions that constitute reimbursements to a fund for expenditures/expenses initially made from it that are properly applicable to another fund are recorded as expenditures/expenses in the reimbursed fund. Nonrecurring or non-routine permanent transfers of equity are reported as residual equity transfers. All other interfund transactions, except for interfund services provided and used and reimbursements, are reported as transfers.

U. Property Taxes and Special Assessments

Under California law, property taxes are assessed and collected by the counties up to 1% of assessed value, plus other increases approved by the voters. The property taxes go into a pool, and are then allocated to the cities in accordance with statutory regulations.

Property taxes attach annually as an enforceable lien on January 1. Taxes are levied on January 1, are payable in two installments, and are delinquent at December 10 and April 10. The County of Placer (the County) is responsible for the collection and allocation of property taxes. The County apportions secured property tax revenue in accordance with the alternate methods of distribution, the “Teeter Plan,” as prescribed by Section 4717 of the California Revenue and Taxation code. Therefore, the City receives 100% of the secured property tax levies to which it is entitled, whether or not collected.

V. Stewardship, Compliance, and Accountability

It is the City's policy to adopt annual budgets. The City Council may amend the budget by motion during the fiscal year.

Expenditures may not legally exceed appropriations at the fund level. Appropriations lapse at the end of the fiscal year. Budget information is presented for governmental fund types on a basis consistent with

accounting principles generally accepted in the United States of America. Budgeted revenue and expenditure amounts represent the original budget and all approved budget amendments.

The City follows these procedures in establishing the budgetary data reflected in the financial statements:

1. Public meetings are conducted to obtain public comments. The City Council annually adopts the budget for the ensuing fiscal year prior to July 1st.
2. Legally adopted budgets and formal budgetary integration is employed as a management control device during the year for all Governmental, Proprietary and Fiduciary Fund Types.
3. Under Article XIII B of the California Constitution (the Gann Spending Limitation Initiative), the City is restricted as to the amount of annual appropriations from the proceeds of taxes, and if proceeds of taxes exceed allowed appropriations, the excess must either be refunded to the State Controller, returned to the taxpayers through revised tax rates or revised fees schedules, or an excess in one year may be offset against a deficit in the following year. For the fiscal year ended June 30, 2024, based on the City's calculations, proceeds of taxes did not exceed the appropriations limit.
4. Budgeted appropriations for the various governmental funds become effective each July 1st.

W. Unearned Revenue

Unearned revenue arises when assets are received before revenue recognition criteria have been satisfied. Grants and entitlements received before eligibility requirements are met are recorded as deferred inflows from unearned revenue. In the governmental fund financial statements, receivables associated with non-exchange transactions that will not be collected within the availability period have been recorded as deferred inflows from unavailable resources.

X. Use of Estimates

The preparation of basic financial statements in conformity with generally accepted accounting principles requires management to make estimates and assumptions that affect certain reported amounts and disclosures. Accordingly, actual results could differ from those estimates.

Y. Comparative Data

Comparative data for the prior year has been presented in the accompanying financial statements in order to provide an understanding of changes in the government's financial position and operations.

Z. Implementation of New Accounting Pronouncements

GASB Statement No. 100, Accounting Changes and Error Corrections—an amendment of GASB Statement No. 62

This Statement defines accounting changes as changes in accounting principles, changes in accounting estimates, and changes to or within the financial reporting entity and describes the transactions or other events that constitute those changes. This Statement also prescribes the accounting and financial reporting for (1) each type of accounting change and (2) error corrections in previously issued financial statements. This statement did not have a material impact on the financial statements.

AA. Upcoming New Accounting Pronouncements

The City is currently analyzing its accounting practices to determine the potential impact on the financial statements of the following recent GASB Statements:

GASB Statement No. 101, *Compensated Absences*

This Statement requires that liabilities for compensated absences be recognized for (1) leave that has not been used and (2) leave that has been used but not yet paid in cash or settled through noncash means. A liability should be recognized for leave that has not been used if (a) the leave is attributable to services already rendered, (b) the leave accumulates, and (c) the leave is more likely than not to be used for time off or otherwise paid in cash or settled through noncash means. Leave is attributable to services already rendered when an employee has performed the services required to earn the leave. Leave that accumulates is carried forward from the reporting period in which it is earned to a future reporting period during which it may be used for time off or otherwise paid or settled. In estimating the leave that is more likely than not to be used or otherwise paid or settled, a government should consider relevant factors such as employment policies related to compensated absences and historical information about the use or payment of compensated absences. However, leave that is more likely than not to be settled through conversion to defined benefit postemployment benefits should not be included in a liability for compensated absences.

This Statement requires that a liability for certain types of compensated absences - including parental leave, military leave, and jury duty leave—not be recognized until the leave commences. This Statement also requires that a liability for specific types of compensated absences not be recognized until the leave is used. A liability for leave that has been used but not yet paid or settled should be measured at the amount of the cash payment or noncash settlement to be made. Certain salary-related payments that are directly and incrementally associated with payments for leave also should be included in the measurement of the liabilities.

The requirements of this Statement are effective for fiscal years beginning after December 15, 2023, and all reporting periods thereafter. However, the City implemented GASB 101 as of June 30, 2024. This statement did not have a material impact on the financial statements.

GASB Statement No. 102, *Certain Risk Disclosures*

This Statement requires a government to assess whether a concentration or constraint makes the primary government reporting unit or other reporting units that report a liability for revenue debt vulnerable to the risk of a substantial impact. Additionally, this Statement requires a government to assess whether an event or events associated with a concentration or constraint that could cause the substantial impact have occurred, have begun to occur, or are more likely than not to begin to occur within 12 months of the date the financial statements are issued.

If a government determines that those criteria for disclosure have been met for a concentration or constraint, it should disclose information in notes to financial statements in sufficient detail to enable users of financial statements to understand the nature of the circumstances disclosed and the government's vulnerability to the risk of a substantial impact. The disclosure should include descriptions for (1) the concentration or constraint (2) each event associated with the concentration or constraint that could cause a substantial impact if the event had occurred or had begun to occur prior to the issuance of the financial statements (3) actions taken by the government prior to the issuance of the financial statements to mitigate the risk. The

requirements of this Statement are effective for fiscal years beginning after June 15, 2024, and all reporting periods thereafter.

GASB Statement No. 103, *Financial Reporting Model Improvements*

This Statement is to improve key components of the financial reporting model to enhance its effectiveness in providing information that is essential for decision making and assessing a government's accountability.

This Statement establishes new accounting and financial reporting requirements or modifies existing requirements related to (a) Management's discussion and analysis (MD&A) (b) Unusual or infrequent items (c) Presentation of the proprietary fund statement of revenues, expenses, and changes in fund net position (d) Information about major component units in basic financial statements (5) Budgetary comparison information (6) Financial trend information in the statistical section

The requirements of this Statement are effective for fiscal years beginning after June 15, 2025, and all reporting periods thereafter.

NOTE 2 - CASH AND INVESTMENTS

As of June 30, 2024, cash and investments were reported in the financial statements as follows:

	Fair Value		Total
	Governmental Activities	Fiduciary Activities	Cash and Investments
Cash and Investments	$ 142,425,078	$ 6,513,915	$ 148,938,993
Restricted Cash and Investments	1,764,583	4,110,184	5,874,767
Total Cash and Investments	$ 144,189,661	$ 10,624,099	$ 154,813,760

A. Cash Deposits

The California Government Code requires California banks and savings and loan associations to secure the City's cash deposits by pledging securities as collateral. This Code states that collateral pledged in this manner shall have the effect of perfecting a security interest and places the City ahead of general creditors of the institution.

The market value of pledged securities must equal at least 110 percent of the City's cash deposits. California law also allows institutions to secure City deposits by pledging first trust deed mortgage notes that have a value of 150 percent of the City's total cash deposits. The City has waived the collateral requirements for cash deposits which are fully insured to $250,000 by the Federal Deposit Insurance Corporation (FDIC). The bank balances before reconciling items totaled $17,693,012 at June 30, 2024, and could be different from carrying amounts due to deposits in transit and outstanding checks. The uninsured amount was $17,193,012, which was collateralized by securities held by pledging financial institutions.

B. Local Agency Investment Fund

LAIF is regulated by the California Government Code Section 16429 under the oversight of the Treasurer of the State of California. The City reports its investment in LAIF at the fair value amount provided by LAIF, which is the same as the value of the pool share. As of June 30, 2024, the fair value was $46,423,019.

The balance is available for withdrawal on demand. Included in LAIF's investment portfolio are collateralized mortgage obligations, mortgage-backed securities, other asset-backed securities, loans to certain state funds, and floating rate securities issued by federal agencies, government-sponsored enterprises, United States Treasury Notes and Bills, and corporations. As of June 30, 2024, these investments matured in an average of 217 days.

C. Placer County Treasurer's Investment Portfolio

The Placer County Treasurer's Investment Portfolio operates under the oversight of The Placer County Treasurer's Review Panel. Investments are made in accordance to California Government Code Section 27000.5 and limited to those investments specified by California Government Code Sections 53601 and 53635. As of June 30, 2024, the value of City investment in the fund was $8,988,583. These monies are held in various investments consisting of treasury notes and bills, other government bonds and money market instruments.

D. Investment Policies

City Investment Policy
Under the provisions of the City's investment policy, and in accordance with California Government Code, the following investments are authorized:

Category	Standard
U.S. Treasuries	No portfolio limit; 5 years max maturity
Federal Agencies	No portfolio limit; 20% max callable federal agency securities; 30% max per institution/issuer; 5 years max maturity
Supranational Obligations	"AA" rated or better by a NRSRO; 30% portfolio max; 10% max per institution/issuer; 5 years max maturity; USD denominated senior unsecured unsubordinated obligations issued or unconditionally guaranteed by IBRD, IFC, or IADB; Eligible for purchase and sale within the U.S.
Municipal Securities (CA, Other States)	"A" rating category or better by a NRSRO; 30% portfolio max; 5% max per institution; 5 years max maturity
Corporate Medium Term Notes	"A" rating category or better by a NRSRO; 30% portfolio max; 5% max per institution/issuer; 5 years max maturity; Issued by corporations organized and operating within the U.S. or by depository institutions licensed by the U.S. or any state and operating within the U.S.
Mortgage-Backed Securities	"AA" rating category or better by a NRSRO; 20% portfolio max; 5% max per institution/issuer; 5 years max maturity; Mortgage Pass-Through Securities, Collateralized Mortgage Obligations, Asset-Backed, or Mortgage-Backed bonds
Negotiable Certificates of Deposit (NCD)	The amount invested in NCDs subject to limitations of California Government Code; Any amount above the FDIC insured limit must be issued by institutions which have short-term debt obligations rated "A-1" or better by a NRSRO; or long-term obligations rated "A" or its equivalent or better by a NRSRO; 30% portfolio max (combined with CDARS); 5% max per institution/ issuer; 5 years max maturity

Category	Standard
Time Deposits (Non-negotiable CD/TD)	20% portfolio max; Max per institution/issuer limited to maximum covered under federal insurance; 5 years max maturity; Non-negotiable time deposits FDIC or collateralized in accordance with California Government Code and the Financial Institutions Reform, Recovery, and Enforcement Act of 1989 (FIRREA)
Collateralized Bank Deposits	No portfolio limit; deposits with financial institutions will be collateralized with pledged securities per California Government Code, Section 53651
Banker's Acceptances	Short-term debt obligations "A-1" rating category or better by a NRSRO or long-term debt obligations "A" rating category or better by a NRSRO; 40% portfolio max; 5% max per institution/issuer; 180 days max maturity
Commercial Paper	Issued by domestic corporation with assets >$500 million and having an "A-1" long-term rating or better by a NRSRO or if the issuer has other debt obligations, having an "A" long-term rating or better by a NRSRO; or Issuer organized in the U.S. as a special purpose corporation, trust, or limitied liability company with program-wide credit enhancements and an "A-1" rating or better by a NRSRO; 25% portfolio max; 5% max per institution/issuer; 10% max of the outstanding paper of the issuing corporation; 270 days maturity
Money Market Mutual Funds	20% portfolio max; 20% max per shares of any one Money Market Mutual Fund; Shares of beneficial interest issued by Mutual Funds and Money Market Funds registered with SEC under the Investment Company Act of 1940; Companies shall either: (i) Attain highest rating by two NRSROs; or (ii) Have an investment adviser registered with SEC with > 5 years experience investing in securities as authorized by by California Government Code, Section 53601, inclusive and with AUM >$500 million; The purchase price of shares of Mutual Funds or Money Market Funds shall not include any commission that the companies may charge
Mutual Funds	20% portfolio max; 10% max per shares of any one mutual fund; Shares of beneficial interest issued by Mutual Funds and Money Market Funds registered with SEC under the Investment Company Act of 1940; Companies shall either: (i) Attain highest rating by two NRSROs; or (ii) Have an investment adviser registered with SEC with > 5 years experience investing in securities as authorized by California Government Code, Section 53601 and with AUM >$500 million; Mutual Funds that invest in securities and obligations as authorized under California Government Code, Section 53601 (a) to (k) and (m) to (q). The purchase price of shares of Mutual Funds or Money Market Funds shall not include any commission that the companies may charge
Local Agency Investment Fund (LAIF)	Maximum amount permitted by State law and LAIF
Local Government Investment Pools	25% portfolio max in the Placer County Treasurer's Investment Pool
Repurchase Agreements	No portfolio limit; 1 year max maturity; 102% collateralized; Securities used as collateral for Repurchase Agreements will be delivered to an acceptable third-party custodian; Repurchase agreements are subject to a Master Repurchase Agreement (in the form developed by SIFMA) between the City and the provider of the repurchase agreement

E. Risk Disclosures

Interest Rate Risk

Interest rate risk is the risk that changes in market interest rates will adversely affect the fair value of an investment. Generally, the longer the term of an investment's maturity, the greater the sensitivity to changes in market interest rates. It is the City's practice to manage its exposure to interest rate risk by purchasing a combination of shorter and longer-term investments and by timing cash flows from maturities so that a portion of the portfolio is maturing or coming close to maturity evenly over time as necessary to provide the cash flow and liquidity needed for City's operations. The City's policy is to limit the weighted average maturity of its investment portfolio to less than five years. As of June 30, 2024, none of the City investments exceeded five years and 63% of the City's total cash and investments were liquid or matured within one year.

Credit Risk

Generally, credit risk is the risk that an issuer of an investment will not fulfill its obligation to the holder of an investment. This is measured by the assignment of a rating by a nationally recognized statistical rating organization. As of June 30, 2024, the City's investments were in compliance with the ratings required by the City's investment policy, indenture agreements and Government Code.

Concentrations of Credit Risk

As of June 30, 2024, the City had no investments in any one issuer exceeding that allowed by City policy, which is more conservative than stipulated by the California Government Code.

Custodial Credit Risk

For an investment, custodial credit risk is the risk that, in the event of the failure of the counterparty, the City will not be able to recover the value of its investments or collateral securities that are in the possession of an outside party. The California Government Code and the City's investment policy contains legal or policy requirements that would limit the exposure to custodial credit risk for investments.

For the investments maintained by the City, no security was uninsured, or unregistered, or held by a brokerage firm which is also the counterparty for the security. With respect to investments, custodial credit risk generally applies only to direct investments in marketable securities. Custodial credit risk does not apply to a local government's indirect investment in securities through the use of mutual funds or government investment pools (such as LAIF).

As of June 30, 2024, the City's investments had the following maturities and ratings:

		Investment Maturities		Year End Rating			
Cash or Investment Type	Fair Value	<1 Year	>1 Year	Exempt	AAAm/ Aaa-mf	Not Rated	G72 Input
Local Agency Investment Fund (LAIF)	$ 46,423,019	$ 46,423,019	$ -	$ 46,423,019	$ -	$ -	Level 1/2
Money Market/Mutual Funds	8,223,085	8,223,085	-	-	8,223,085	-	Level 2
Special Assessment Bonds	6,440,883	-	6,440,883	-	-	6,440,883	Level 1/2
County Treasurer's Investment Portfolio	8,988,583	8,988,583	-	8,988,583	-	-	Level 2
Corporate Notes	22,772	-	22,772	-	-	22,772	Level 1
Cash on Hand	3,328	3,328	-	3,328	-	-	n/a
Chandler Investments:							
Agency	3,124,528	-	3,124,528	-	3,124,528	-	Level 1
Agency CMBS	2,399,740	-	2,399,740	-	2,399,740	-	Level 1
Corporate	16,102,035	-	16,102,035	-	16,102,035	-	Level 1
Money Market Fund	421,811	421,811	-	-	421,811	-	Level 1
Supranational	2,437,628	-	2,437,628	-	2,437,628	-	Level 1
US Treasury	48,605,472	22,167,544	26,437,928	-	48,605,472	-	Level 1
Cash	96,665	96,665	-	-	96,665	-	n/a
Cash Deposits	11,524,211	11,524,211	-	11,524,211	-	-	n/a
Total Cash and Investments	$ 154,813,760	$ 97,848,246	$ 56,965,514	$ 66,939,141	$ 81,410,964	$6,463,655	

F. Fair Value Measurements

GASB 72 established a hierarchy of inputs to valuation techniques. This hierarchy has three levels:

- Level 1 inputs are quoted prices in active markets for identical assets or liabilities.
- Level 2 inputs are quoted market prices for similar assets or liabilities, quoted prices for identical or similar assets or liabilities in markets that are not active, or other than quoted prices that are not observable.
- Level 3 inputs are unobservable inputs, such as a property valuation or an appraisal.

NOTE 3 - ACCOUNTS RECEIVABLE

Accounts receivable consisted of the following as of June 30, 2024:

Receivables	General Fund	Traffic Circulation Impact Fee Fund	Streets Grants Fund	Nonmajor Funds	Total
Federal Government	$ -	$ -	$ -	$ 91,789	$ 91,789
State Government	1,635,227	-	1,592,964	282,079	3,510,270
Local Taxes	4,812,362	-	-	738,485	5,550,847
Local Other	1,398,099	39,904	555,413	150,219	2,143,635
Totals	$ 7,845,688	$ 39,904	$ 2,148,377	$ 1,262,572	$ 11,296,541

NOTE 4 - LEASES RECEIVABLES

As of June 30, 2024, the City's leases receivable were $3,830,409 and deferred inflows of resources were $3,791,504. The net present value of the leases receivable was valued using an interest rate of 2.95% with annual payments of $325,000 over sixteen years.

The future payments were as follows:

Year Ending June 30	Principal	Interest	Total
2025	$ 214,893	$ 110,107	$ 325,000
2026	221,319	103,681	325,000
2027	227,937	97,063	325,000
2028	234,752	90,248	325,000
2029	241,772	83,228	325,000
2030-2034	1,321,725	303,275	1,625,000
2035-2039	1,368,011	94,489	1,462,500
Total	$ 3,830,409	$ 882,091	$ 4,712,500

NOTE 5 - INTERFUND TRANSACTIONS

A. Interfund Receivables and Payables

Due To/From Other Funds

The timing of when cash is received and paid can result in a negative cash balance in a fund as of fiscal year end. At year-end, a liability, "Due To Other Funds" is created to eliminate any negative cash balances along with a corresponding asset, "Due From Other Funds". In the following fiscal year, the liabilities are settled and the assets are liquidated. As of June 30, 2024, interfund receivables and payables consisted of the following:

Fund	Due from Other Funds	Due to Other Funds
General Fund	$ 993,512	$ -
Streets Grants Fund	-	618,580
Nonmajor Funds	-	374,932
Total	$ 993,512	$ 993,512

B. Transfers In/Out

Interfund transfers result from the movement of resources from one fund to another within the governmental unit. At June 30, 2024, interfund transfers consisted of the following:

Fund	Fund Type	Transfers in	Transfers out
Major Funds:			
General Fund	General	$ 5,918,712	$ 558,874
Sales Tax SB 325	Special Revenue	-	821,653
Low Mod Income Housing Asset	Capital Projects	3,200	143,706
Traffic Circulation Impact Fee	Capital Projects	-	84,792
Nonmajor Funds:			
Capital Construction Debt Service	Debt Service	531,610	-
Gas Taxes	Special Revenue	-	136,705
Community Facilities District No. 1	Special Revenue	-	2,347,507
Community Facilities District No. 5	Special Revenue	16,106	764,123
Community Facilities District No. 6	Special Revenue	-	34,503
Landscaping and Lighting Maintenance District No. 2	Special Revenue	-	334,887
Park Development & Maintenance Tax Fund	Special Revenue	-	652,469
Traffic Safety/PD Grants	Special Revenue	1,123	543
OPIOID Settlement	Special Revenue	-	170,143
CDBG HUD Entitlement	Special Revenue	-	59,035
Grants and Other Reimbursables	Special Revenue	-	64,754
Supplemental Law Enforcement Grant	Special Revenue	-	206,033
Capital Construction Tax	Capital Projects	500,000	531,610
Oak Tree Mitigation	Capital Projects	-	16,420
Whitney Ranch Trunk Sewer Project	Capital Projects	-	8,655
North West Rocklin Community Park Fees	Capital Projects	-	2,727
Whitney Ranch Interchange Fees	Capital Projects	-	7,305
Wetlands Maintenance	Permanent	-	2,600
Conservation Easement Endowment Fund	Permanent	-	16,106
Total Governmental Funds		6,970,751	6,965,150
Internal Service Funds:			
Fleet Management	Internal Service	54,550	60,151
Total Transfers		$ 7,025,301	$ 7,025,301

Transfers are used to (1) move revenues from the fund that statute or budget requires to collect them to the fund that statute or budget requires to expend them, and (2) move receipts restricted to debt service from the funds collecting the receipts to the debt service fund as debt service payments become due.

NOTE 6 - LOANS RECEIVABLE

Through the City's various programs, the City has loaned funds to qualifying individuals and businesses. Interest rates vary depending on the terms of the loan. Interest is accrued on the loans that bear interest. Loans receivable consisted of the following as of June 30, 2024:

Loans Receivable	Beginning	Additions	Deletions	Ending
Highway 65 Sunset Blvd. Interchange	$ 759,775	$ -	$ 90,110	$ 669,665
William Jessup University Ave.	1,005,022	-	502,511	502,511
Community Development Block Grant	310,714	-	-	310,714
First Time Home Buyers	694,337	-	70,481	623,856
Down Payment Assistance	941,657	-	18,000	923,657
Villa Serena II	486,102	-	108,138	377,964
College Manor	650,000	-	-	650,000
Sunset Blvd	575,000	-	-	575,000
HPD Shannon Bay	425,784	-	10,572	415,212
Placer West Housing Partners	311,470	-	-	311,470
Placer County Flood Control District	33,613	-	20,388	13,225
Total Loans Receivable	$ 6,193,474	$ -	$ 820,200	$ 5,373,274

The following is a summary of the loans and notes receivable outstanding as of June 30, 2024:

Highway 65 Sunset Interchange Loan
As members of the "Bizz Johnson Joint Powers Authority" (JPA), Placer County, the City of Roseville, and the City of Rocklin made loans to the JPA for the construction of the Sunset Blvd. Highway 65 interchange. The original loan amount from the City of Rocklin was $2,033,684. The loan does not bear interest. The timing of the JPA repayments is at the discretion of the JPA Board. At June 30, 2024, a balance of $669,665 was outstanding.

William Jessup University Ave.
On February 25, 2017, the City entered into a reimbursement agreement with WJU to release WJU from obligations for street improvements on University Ave that were completed by the City. In lieu of WJU's construction and street improvements, WJU shall reimburse the City $3,015,066. Reimbursement payments shall be made over 6 years (2019 to 2024) and bear interest at 2.15% per annum with the final payment due July 1, 2024. The balance outstanding as of June 30, 2024 was $502,511.

Community Development Block Grant (CDBG) Revolving Loans
The City participates in a CDBG Revolving loan program. The program is federally funded and provides housing rehabilitation loans to eligible applicants. The City makes loans to resident homeowners who qualify as low income, some of which are deferred and are not repaid until the title to the property changes. The balance of these loans at June 30, 2024 was $310,714.

First Time Home Buyers
The City has made various loans to qualifying participants within the City as part of the Federal First Time Home Buyers Program (HOME). Interest rates vary depending on the terms of the loan and interest is deferred until the loan is refinanced or title to the property changes and may be waived under certain conditions if the loan is carried to full term. The HOME notes receivable balance at June 30, 2024 was $623,856.

Down Payment Assistance Loans
The former Rocklin Redevelopment Agency began a down payment assistance program in 2007 to help low and moderate income individuals with purchases of a home. Qualifying individuals receive down

payment assistance with the loan deferred as long as it is an owner-occupied dwelling. Interest and/or principal may be waived if certain terms are met by the borrower. The Down Payment Assistance loans receivable at June 30, 2024 was $923,657.

Villa Serena II Loan
On July 24, 2001, the former Rocklin Redevelopment Agency entered into an agreement with Stanford Arms, a California Limited Partnership, for a loan in the amount of $1,100,000. The loan has been used to assist with the construction of the Villa Serena affordable senior project known as Stanford Arms. The loan is at 3% simple interest and is to be repaid from residual receipts over a thirty-year period. The final payment date is dependent on residual receipts. The loan is secured by a deed of trust covering the property, improvements, and fixtures and by all deposits of the borrower. At June 30, 2024, a balance of $377,964 was outstanding.

College Manor
On November 1, 2007, the former Rocklin Redevelopment Agency entered into an agreement with CAHA College Manor LP, a California Limited Partnership, for a loan in the amount of $650,000. The loan has been used to finance the acquisition and renovation of low-income apartments located at 4201 Racetrack Road. The loan is at 3% simple interest and is to be repaid from residual receipts over a fifty-five-year period. The final payment date is dependent on residual receipts. At June 30, 2024, a balance of $650,000 was outstanding.

Sunset Blvd
On June 24, 2008, the former Rocklin Redevelopment Agency authorized a loan in the amount of $575,000 to Sunset Street Housing Partners for an existing apartment complex located at 3655 Sunset Blvd. The loan provides for 3% simple interest for 30 years with payments to begin after the second anniversary of the loan document execution date and the final payment due December 22, 2038. Associated with this project, the former Rocklin Redevelopment Agency also approved Conduit Debt issuance in the maximum amount of $10,000,000 in multifamily revenue bonds by the California Statewide Communities Development Authority. At June 30, 2024, a balance of $575,000 was outstanding.

HPD Shannon Bay, LP
On September 9, 2008, the former Rocklin Redevelopment Agency authorized a housing rehabilitation loan in the amount of $500,000 with HPD Shannon Bay LP for a 50-unit multi-family housing project referred to as the Shannon Bay Apartments. The loan provides for 3% simple interest for 30 years with a five-year period of interest only payments. The loan then converts to an amortizing loan during which time an annual payment of $25,296 will be paid and at the end of the loan term a balloon payment for the remaining balance becomes due and payable. The final payment is due January 11, 2040. Associated with this project, the former Rocklin Redevelopment Agency also approved Conduit Debt issuance in the maximum amount of $6,000,000 in multifamily revenue bonds by the California Statewide Communities Development Authority. At June 30, 2024, a balance of $415,212 was outstanding.

Placer West Housing Partners, LP
On December 8, 2009, the former Rocklin Redevelopment Agency authorized a housing rehabilitation loan in the amount of $500,000 with Placer West Housing Partners LP for a 44-unit affordable housing project located at 6055 Placer West Drive in Rocklin. The loan provides for 3% simple interest for 30 years with partial interest only payments in the amount of $2,000 to begin on the second anniversary of the loan document execution date of December 22, 2009. The final payment is due December 21, 2040. A balloon payment of the remaining unpaid balance of principal and interest shall be due at the conclusion of the loan term. At June 30, 2024 a balance of $311,470 was outstanding.

Placer County Flood Control District

During the fiscal year ended June 30, 2018, the City authorized a $182,063 loan with the Placer County Flood Control District (the District) to help fund the Antelope Creek Flood Control Project, Upper Weir. The District intended to fund the project through a combination of the Dry Creek Trust Fund and two Department of Water Resources Grants. The District will make future reimbursement payments to each participant totaling the amount of each participant's original advance payment plus simple interest as determined by the Construction Cost Index (CCI). The City has a 13.42% share of the total project costs. Reimbursement of advanced payment shall be made twice yearly when the Trust Fund has a balance of at least $25,000 over the minimum balance of $50,000. The City estimates full repayment by June 30, 2025. At June 30, 2024, a balance of $13,225 was outstanding.

NOTE 7 - CAPITAL ASSETS

Capital assets consisted of the following as of June 30, 2024:

Governmental activities:	Beginning	Additions/	Retirements	Transfers	Ending
Nondepreciable Capital Assets:					
Land	$ 8,338,942	$ -	$ -	$ -	$ 8,338,942
Land Improvements	108,402	-	-	-	108,402
Park Land	61,097,079	-	-	-	61,097,079
Construction In Progress	12,116,112	8,477,890	-	(4,178,236)	16,415,766
Total Nondepreciable Capital Assets	81,660,535	8,477,890	-	(4,178,236)	85,960,189
Depreciable/amortizable capital assets:					
Subscription right of use assets	609,650	-	-	-	609,650
Buildings	35,262,889	-	(51)	106,632	35,369,470
Facilities & Other Improvements	7,417,667	-	-	326,829	7,744,496
Machinery & Equipment	3,438,750	518,921	-	-	3,957,671
Fleet Machinery & Equipment	15,601,203	2,038,150	(36,178)	-	17,603,175
Park Buildings	2,717,879	-	-	-	2,717,879
Park Equipment	1,629,694	-	-	-	1,629,694
Park Improvements	27,769,219	-	-	1,153,324	28,922,543
Infrastructure	437,099,311		(2,909,592)	2,591,451	436,781,170
Total Depreciable/Amortizable	531,546,262	2,557,071	(2,945,821)	4,178,236	535,335,748
Total Capital Assets	613,206,797	11,034,961	(2,945,821)	-	621,295,937
Accumulated Depreciation/Amortization:					
Subscription right of use assets	6,519	6,520	-	-	13,039
Buildings	23,363,132	964,016	-	-	24,327,148
Facilities & Other Improvements	4,476,369	322,365	-	-	4,798,734
Machinery & Equipment	3,050,678	128,590	-	-	3,179,268
Fleet Machinery & Equipment	9,537,628	1,033,923	(35,857)	-	10,535,694
Park Buildings	916,236	90,596	-	-	1,006,832
Park Equipment	1,605,309	24,385	-	-	1,629,694
Park Improvements	19,444,411	985,236	-	-	20,429,647
Infrastructure	209,959,458	11,075,483	(2,909,592)	-	218,125,349
Total Accumulated Depreciation/Amort.	272,359,740	14,631,114	(2,945,449)	-	284,045,405
Total Capital Assets - Net	$ 340,847,057	$ (3,596,153)	$ (372)	$ -	$ 337,250,532

Depreciation expense was charged to the following functions in the statement of activities:

General Government	$ 5,864
Public Safety	837,736
Parks and Recreation	124,797
Public Works	13,662,717
Total Depreciation/Amortization Expense	$ 14,631,114

NOTE 8 - NONCURRENT LIABILITIES

The City's noncurrent liabilities consisted of the following as of June 30, 2024:

Description	Beginning Balance	Additions	Deletions	Ending Balance	Due Within One Year
Lease Revenue Bonds:					
2016 Lease Revenue Bonds	$ 7,380,000	$ -	$ 300,000	$ 7,080,000	$ 315,000
Unamortized Premiums	495,913	-	27,550	468,363	-
Subtotal Lease Revenue Bonds	7,875,913	-	327,550	7,548,363	315,000
Direct Borrowings:					
Pacific Premier Bank Loan - RPFA Refunding	1,526,806	-	497,623	1,029,183	508,181
Sunset Whitney Recreation Area Note	516,934	-	516,934	-	-
Subtotal - Direct Borrowings	2,043,740	-	1,014,557	1,029,183	508,181
Subscription Liabilities	601,247	-	2,686	598,561	2,732
Claims Payable	2,472,627	689,479	350,820	2,811,286	161,176
Net Pension Liability	63,835,601	14,090,140	11,042,270	66,883,471	-
Net OPEB Liability	4,617,846	11,724,314	12,215,827	4,126,333	-
Compensated Absences	3,842,281	3,543,997	3,842,282	3,543,996	1,733,265
Total Noncurrent Liabilities	$ 85,289,255	$ 30,047,930	$ 28,795,992	$ 86,541,193	$ 2,720,354

The annual debt service requirements on general long-term debt is as follows:

Year Ending	Lease Revenue Bonds			Direct Borrowings		
June 30,	Principal	Interest	Total	Principal	Interest	Total
2025	$ 315,000	214,475	$ 529,475	$ 508,181	$ 17,052	$ 525,233
2026	330,000	198,350	528,350	521,002	5,731	526,733
2027	345,000	183,200	528,200	-	-	-
2028	360,000	169,100	529,100	-	-	-
2029	375,000	158,150	533,150	-	-	-
2030-2034	2,005,000	650,126	2,655,126	-	-	-
2035-2039	2,320,000	332,700	2,652,700	-	-	-
2040-2044	1,030,000	31,199	1,061,199	-	-	-
Total	$ 7,080,000	$ 1,937,300	$ 9,017,300	$ 1,029,183	$ 22,783	$ 1,051,966

2016 Rocklin Public Finance Authority Lease Revenue Bonds
On October 4th, 2016, the Rocklin Public Financing Authority issued lease revenue bonds in the amount of $9,455,000, at a premium of $688,769, to defease the outstanding 2003 certificates of participation and finance the acquisition and construction of various capital improvement projects. The security for the bonds was the pledge of lease payment revenues received by the Authority under a lease agreement with the City. These bonds were reported as City debt as required by GASB 62 and NCGA Statement 5. The term of the bonds was 25 years. Interest rates on the bonds range from 2% to 5%. Principal payments ranging from $245,000 to $525,000 are payable annually on November 1st and interest payments ranging from $7,875 to $180,973 are payable semi-annually on May 1st and November 1st, through November 1, 2040. The aggregate debt service savings was $15,000 from this refunding.

Rocklin Public Finance Authority Pacific Premier Bank Loan
On July 1, 2017, the City, on behalf of Community Facilities Districts (CFD) 6, 8 and 9, agreed to borrow from the Rocklin Public Financing Authority (Authority) an amount necessary to refund 1999 CFD special tax bonds and pledged the special tax revenues levied in each CFD to the Authority. In the 2017 Special Tax Revenue Refunding Loan Agreement, the Authority agreed to borrow from Pacific Premier Bank, the funds necessary to refund the 1999 CFD special tax bonds and in turn, refund the 2003 Authority bonds. The loan is secured by a pledge of the revenues received by the Authority from the 2017 CFD loan payments. Pacific Premier Bank has no remedy against the City if special taxpayers in the CFD's fail to make their payments. The loan was for $5,000,077 at a fixed interest rate of 2.2% and matures on September 1, 2025. This loan was reported as City debt as required by GASB 62 and NCGA Statement 5. The refunding resulted in an economic gain of $1,989,923. The aggregate debt service of the Pacific Premier loan was $233,844 less than the debt service requirements, of the refunded debt, including cash prepayments during the refunding.

City of Rocklin Sunset Whitney Note
On December 18, 2017, the City entered into a note payable with Sunset Whitney, LLC to pay $3,000,000 as a part of a $5,800,000 purchase of golf course land. Principal and interest payments shall be made on the first of December each year and interest accrues at 2% of the outstanding principal balance per annum for six years beginning December 31, 2018. This note was fully paid during the year.

Subscription Based Information Technology Agreements
On July 1, 2021, the City entered into a 1,122 month subscription for the use of PDS Software. The initial subscription liability and right of use asset was $609,650. As of June 30, 2024, the value of the subscription liability was $598,561 and the right of use asset was $596,611, net of accumulated amortization totaling $13,039. The City is required to make annual fixed payments of $12,935. The subscription has an interest rate of 1.7047%. See Note 7 for more information regarding the changes in the subscription right of use assets. The following table summarizes the future payments for the subscription liability.

June 30,	Principal	Interest	Total
2025	$ 2,732	$ 10,203	$ 12,935
2026	2,778	10,157	12,935
2027	2,825	10,110	12,935
2028	2,874	10,061	12,935
2029	2,943	9,992	12,935
Thereafter	584,409	570,512	1,154,921
Total	$ 598,561	$ 621,035	$ 1,219,596

Claims Payable
The City has recorded a liability for potential claims in excess of amounts covered by the insurance pool. At June 30, 2024, the City had a claims payable liability of $2,811,286. See Note 9 for further discussion on the City's risk management activities.

Net Pension Liability
As a result of the implementation of GASB 68, the City has recorded a net pension liability for its CalPERS Miscellaneous, Fire and Police pension plans. At June 30, 2024, the City had a net pension liability of $66,883,471. See Note 11 for further discussion on the pension liability.

Net OPEB Liability
A net OPEB liability is the cumulative difference between annual OPEB cost and an employer's contributions to a plan. At June 30, 2024, the City had a net OPEB obligation of $4,126,333. See Note 12 for further discussion on OPEB.

Compensated Absences
The City records compensated absences for all employee absences that are expected to be paid such as vacation and illness. Compensated absences had a balance of $3,543,996 at June 30, 2024; of that amount, $1,733,265 is expected to be paid within a year.

Arbitrage
The Tax Reform Act of 1986 instituted certain arbitrage restrictions with respect to the issuance of tax-exempt bonds after August 31, 1986. Arbitrage regulations deal with the investment of all tax-exempt bond proceeds at an interest yield greater than the interest yield to bondholders. Generally, all interest paid to bondholders can be retroactively rendered taxable if applicable rebates are not reported and paid to the Internal Revenue Service (IRS) at least every five years. The City performed calculations of excess investment earnings on various bonds and financings and at June 30, 2024, there were no arbitrage liabilities.

NOTE 9 - NET POSITION/FUND BALANCE

Net Position
Net position consisted of the following as of June 30, 2024:

	Net Investment in Capital Assets	Restricted	Unrestricted	Total
Capital Assets - Net	$ 337,250,532	$ -	$ -	$ 337,250,532
Associated Long-term Debt	(9,176,107)	-	-	(9,176,107)
Deferred Gain on Refunding	(663,307)	-	-	(663,307)
Unspent Proceeds from Debt	-	-	-	-
Fund Balance Restrictions	-	37,086,019	-	37,086,019
Nonexpendable endowments	-	491,455	-	491,455
Net Position	-	-	427,871,634	427,871,634
Net Investment in Capital Assets	-	-	(327,411,118)	(327,411,118)
Restricted Net Position	-	-	(37,577,474)	(37,577,474)
Total	$ 327,411,118	$ 37,577,474	$ 62,883,042	$ 427,871,634

Fund Balance

Fund balances consisted of the following at June 30, 2024:

	Nonspendable	Restricted	Committed	Unassigned	Total
Endowments	$ 453,455	$ -	$ -	$ -	$ 453,455
Wetlands Maintenance	38,000	17,946	-	-	55,946
Debt Service	-	1,105,196	-	-	1,105,196
Low and Moderate Income Housing	-	13,287,107	-	-	13,287,107
SB325 Sales Tax	-	5,424,024	-	-	5,424,024
SB1 Road Maintenance & Rehab Act	-	2,076,535	-	-	2,076,535
Gas Tax	-	1,606,641	-	-	1,606,641
Lighting Districts	-	1,510,395	-	-	1,510,395
Community Facilities Districts	-	6,251,089	-	-	6,251,089
Housing Rehabilitation	-	845,293	-	-	845,293
Asset Forfeiture	-	426,779	-	-	426,779
CASp Certification and Training	-	99,302	-	-	99,302
Recreation Facilities Contributions	-	2,263	-	-	2,263
Costco Settlement	-	3,755,224	-	-	3,755,224
OPIOID Settlement	-	8,559	-	-	8,559
Traffic Circulation Impact Fees	-	669,666	18,431,931	-	19,101,597
Capital Construction Tax	-	-	6,925,559	-	6,925,559
Oak Tree Mitigation Fees	-	-	494,542	-	494,542
North West Area Comm Park Fees	-	-	1,374,146	-	1,374,146
Public Facilities Impact Fees	-	-	1,445,696	-	1,445,696
Whitney Ranch Interchange Fee	-	-	1,691,791	-	1,691,791
Trails Impact Fees	-	-	37,197	-	37,197
Community Center Impact Fees	-	-	161,078	-	161,078
Park Development Capital Projects	-	-	482,090	-	482,090
General Fund:					
Unassigned	-	-	-	28,290,516	28,290,516
Building Repair Reserve	-	-	1,387,026	-	1,387,026
Operating Reserve	-	-	16,232,400	-	16,232,400
Park Infrastructure Reserve	-	-	424,100	-	424,100
Surplus Reserve	-	-	5,122,750	-	5,122,750
Reserve for Encumbrances	-	-	4,487,923	-	4,487,923
ARPA	-	-	2,336,115	-	2,336,115
Quarry Park Adventures	-	-	240,000	-	240,000
Economic Development	-	-	706,782	-	706,782
Technology Fee	-	-	807,385	-	807,385
Retiree's Health	-	-	1,391,028	-	1,391,028
QP Amphitheater Events	-	-	-	(7,532)	(7,532)
Long-term Receivables	38,905	-	-	-	38,905
Leases receivable	13,225	-	-	-	13,225
Traffic Safety/PD Grants	-	-	-	(31,806)	(31,806)
Streets Grants	-	-	-	(1,292,506)	(1,292,506)
Grants and Other Reimbursables	-	-	-	(139,151)	(139,151)
Community Parks Fund	-	-	560,037	-	560,037
Total	$ 543,585	$ 37,086,019	$ 64,739,576	$ 26,819,521	$ 129,188,701

Nonspendable fund balances included the following as of June 30, 2024:

1. **Endowments** include principal corpus from which income will fund maintenance of Wetlands and Preserve Area maintenance and operations.
2. **Long-term loans/notes receivable** include noncurrent portions of loans and notes receivables.
3. **Leases receivable** include balances from long-term leases of City owned property to third parties, offset by amounts deferred over the term of the lease.

Restricted fund balances included the following as of June 30, 2024:

1. **Wetlands Maintenance** includes amounts other than the non-spendable endowment to be used on the maintenance of the wetlands on a parcel in Stanford Ranch Phase III.
2. **Debt Service** includes amounts used for debt service in the Rocklin Public Financing Authority debt service fund.
3. **Low and Moderate Income Housing Fund** includes amounts used to increase the City's supply of low and moderate income housing.
4. **SB325 Sales Tax** includes amounts to be used for repair and maintenance of City streets in accordance with Senate Bill 325.
5. **SB1 Road Maintenance & Rehab Act** includes amounts to be used for City road maintenance projects in accordance with Senate Bill 1, Chapter 5, Statutes of 2017.
6. **Gas Tax** includes amounts received and expended for construction and street maintenance purposes as defined in Sections 2105, 2106, 2107, and 2107.5 of the California Streets and Highways Code.
7. **Lighting Districts** includes amounts to be used to maintain and operate the City's lighting districts.
8. **Community Facilities Districts** include amounts to be used to maintain and operate the City's community facilities districts.
9. **Housing Rehabilitation** includes amounts to be used for the City's housing rehabilitation programs.
10. **Asset Forfeiture** includes amounts that are restricted to police activities.
11. **CASp Certification and Training** includes amounts to be used for Certified Access Specialist program training in accordance with Assembly Bill 1379.
12. **Recreation Facilities Contributions** include amounts set aside for recreation facilities construction and improvements.
13. **Costco Settlement** includes funds received according to the Settlement Agreement between Costco, the Town of Loomis, and the City of Rocklin, dated October 2022.
14. **OPIOID Settlement** includes funds received according to the Opioid Settlement Agreement and any amendments between California Cities and Counties with Pharmaceutical companies and Distributors dated July 21, 2021. All settlement funds will be used for opioid remediation, and a minimum of 70% of the settlement funds received are required to be used for future opioid remediation.
15. **Traffic Circulation Impact Fees** include long-term receivables related to street improvements needed to reduce the impact caused by new development within the City.

16. **CDBG HUD Entitlement** restricted fund balance includes amounts required to be spent on housing and urban development.

Committed fund balances included the following as of June 30, 2024:

1. **General Fund:**
    a. **Building Repair Reserve**s include amounts set aside for routine building maintenance and to support the expansion of existing City facilities to address workforce needs of city services.
    b. **Operating Reserve** includes amounts set aside for operating expense contingencies.
    c. **Park Infrastructure Reserve** includes amounts set aside for routine park facilities maintenance and future park infrastructure projects.
    d. **Surplus Reserve** includes surplus amounts set aside for operating expense contingencies.
    e. **Reserve for Encumbrances** includes amounts set aside for encumbrances, or open purchase orders, rolled forward to the following year.
    f. **ARPA** committed fund balance includes amounts set aside from the ARPA revenue loss replacement grant.
    g. **Quarry Park Adventures** includes amounts set aside for Adventure Park operations.
    h. **Economic Development** includes amounts set aside to promote economic development within the City.
    i. **Technology Fee** includes a 6% fee assessed on certain program revenues to fund the cost of technology systems.
    j. **Retiree's Health** represent amounts set aside to fund future retiree health insurance premiums.
2. **Traffic Circulation Impact Fees** include amounts to be used for street improvements to reduce the impacts caused by new development within the City.
3. **Capital Construction Tax** includes amounts set aside for city construction projects.
4. **Oak Tree Mitigation** includes amounts set aside for oak tree preservation.
5. **North West Rocklin Community Park Fee** includes Impact Fees to be used for community parks in the North West Rocklin (Whitney Ranch) area.
6. **Public Facilities Impact Fees** include amounts to be used to fund expansion of public facilities to serve new development within the City.
7. **Whitney Ranch Interchange Fee** includes Impact Fees to be used to develop Highway 65 interchanges in the Whitney Ranch area.
8. **Trails Impact Fees** include amounts to be used for trail improvements to reduce the impact caused by new development within the City.
9. **Community Center Impact Fees** include amounts to be used for community center improvements and reduce the impact caused by new development within the City.
10. **Park Development Capital Projects** include amounts used for community park and city-wide recreational facilities improvements to reduce the impacts of increased use by new development within the City.
11. The **Community Park Fees Capital Projects** fund includes amounts to be used for community park projects from community park fees.

The following funds had deficit fund balances as of June 30, 2024:

1. The **Traffic Safety/PD Grants** fund had a deficit fund balance of $31,806 as of June 30, 2024, that is to be funded through deferred and unearned grants.
2. The **Streets Grants** fund had a deficit fund balance of $1,292,506 as of June 30, 2024 that is to be funded through deferred and unearned grants.
3. The **Grants and Other Reimbursables** fund had a deficit fund balance of $139,151 as of June 30, 2024 that is to be funded through deferred and unearned grants.

NOTE 10 - RISK MANAGEMENT

The City's insurance coverage and the respective coverage providers are as follows:

Amount	Coverage Provider	Payment Source
Liability Claim:		
$0 - $50,000	Self-insured	Banking layer
$50,001 - $1,250,000	NCCSIF	Shared risk
$1,250,001 - $40,000,000	Excess coverage	CJPRMA
Workers' Compensation:		
$0 - $100,000	Self-insured	Banking layer
$100,001 - $500,000	NCCSIF	Shared risk
$500,001 - Statutory	Excess coverage	CSAC EIA

The City is a member of the Northern California Cities Self Insurance Fund (NCCSIF) along with twenty-one other northern California cities. The NCCSIF is a joint powers authority (JPA) organized in accordance with Title 1, Division 7, Chapter 5, Article 1 of the California Government Code. The purpose is to create a common pool of funds to be used to meet obligations of the parties to provide workers' compensation benefits for their employees and to provide excess liability insurance. The NCCSIF provides claims processing administrative services, risk management services, and actuarial studies.

A member from each city governs the NCCSIF. City Council members do not have significant oversight responsibility, since they evenly share all factors of responsibility with the other cities. The City does not retain the risk of loss. However, ultimate liability for payment of claims and insurance premiums resides with member cities. The NCCSIF is empowered to make supplemental assessments as needed to eliminate deficit positions of member cities. If the JPA becomes insolvent, the City is responsible only to the extent of any deficiency in its equity balance.

The NCCSIF establishes claims liabilities based on estimates of the ultimate cost of claims (including future claims settlement expenses) that have been reported but not settled, plus estimates of claims that have been incurred but not reported. Because actual claims costs depend on various factors, the claims liabilities are recomputed periodically using a variety of actuarial and statistical techniques to produce current estimated claims that reflect recent settlements, claim frequency, and other economic and social factors. A provision of inflation is implicit in the calculation of estimated future claims costs. Adjustments to claims liabilities are charged or credited to expense in the periods in which they are made.

The City participates in excess insurance coverage provided by California joint powers authorities (JPAs),

the California Joint Powers Risk Management Authority (CJPRMA) and the California State Association of Counties Excess Insurance Authority (CSAC EIA). These JPAs self-fund to $7,500,000 for Liability Insurance and $5,000,000 for Worker's Compensation Insurance and then purchase reinsurance over that amount to their various limits. The City is self-insured for employee dental and vision claims. There have been no significant reductions in insurance coverage from coverage in the prior fiscal year. Settlements have not exceeded the insurance coverage for the past three fiscal years.

The City's equity investment in the NCCSIF of $4,044,341 is recorded in the Risk Management Internal Service Fund. The audited financial statements of the JPA are available at the NCCSIF's office. The following is a summary of the claims liabilities for the last three fiscal years:

	Year Ended June 30, 2024	Year Ended June 30, 2023	Year Ended June 30, 2022
Claims payable, beginning of year	$ 2,472,627	$ 2,832,930	$ 2,151,862
Fiscal year claims and changes in estimates	689,479	264,968	1,275,627
Claims payments	(350,820)	(625,271)	(594,559)
Claims payable, end of year	$ 2,811,286	$ 2,472,627	$ 2,832,930

NOTE 11 - RETIREMENT PLANS

A. General Information about the Pension Plans

Plan Description
All qualified employees are eligible to participate in the City's Miscellaneous agent multiple employer-defined benefit pension plan or the Safety (Fire and Police) cost-sharing multiple employer-defined benefit pension plans (Plans) administered by the California Public Employees' Retirement System (CalPERS). Benefit provisions under the Plans are established by State statute and City resolution. CalPERS issues publicly available reports that include a full description of the pension plans regarding benefit provisions, assumptions, and membership information that can be found on the CalPERS website.

Benefits Provided
CalPERS provides service retirement and disability benefits, annual cost of living adjustments and death benefits to plan members. Benefits are based on age at retirement, highest salary for either a one or three year period and years of credited service. The cost-of-living adjustments for the Plans are applied as specified by the California Public Employees' Retirement Law. The Plans' provisions and benefits in effect at June 30, 2024, are summarized as follows:

	Miscellaneous		Safety			
	Classic	PEPRA	Fire	PEPRA Fire	Police	PEPRA Police
Hire date	Before 1/1/2013	1/1/2013	Before 1/1/2013	1/1/2013	Before 1/1/2013	1/1/2013
Benefit formula	2% @ 55	2% @ 62	3% @ 50	2.7% @ 57	3% @ 50	2.7% @ 57
Benefit vesting schedule	5 Years	5 Years	5 Years	5 Years	5 Years	5 Years
Benefit payments	Monthly for Life	Monthly for Life	Monthly for Life	Monthly for Life	Monthly for Life	Monthly for Life
Retirement age	55	62	50	57	50	57
Monthly benefits as a % of eligible compensation	2%	2%	3%	2.7%	3%	2.7%
Required employee cont. rates	7.55%	8.25%	8.99%	13.75%	8.99%	13.75%
Required employer cont. rates	10.45%	8.25%	27.11%	13.54%	27.11%	13.54%

Employees Covered
At June 30, 2024, the following employees were covered by the benefit terms for the Plans:

	Miscellaneous	Safety
Active	141	98
Transferred	113	54
Separated	183	21
Retired	196	110
Total	633	283

Contributions
Section 20814(c) of the California Public Employees' Retirement Law requires that the employer contribution rates for all public employers be determined on an annual basis by the actuary and shall be effective on the July 1 following notice of a change in the rate. Funding contributions for the Plans are determined annually on an actuarial basis as of June 30 by CalPERS. The actuarially determined rates are the estimated amount necessary to finance the costs of benefits earned by employees during the year, with an additional amount to finance any unfunded accrued liability. The City is required to contribute the difference between the actuarially determined rate and the contribution rate of employees. For the year ended June 30, 2024, the City's contributions were as follows:

	Miscellaneous	Safety
Employer contributions	$ 3,184,093	$ 4,925,622

Pension Liabilities, Pension Expenses and Deferred Outflows/Inflows of Resources Related to Pensions

Pension Liability
As of June 30, 2024, the City reported net pension liabilities for each plan as follows:

	Net Pension Liability
Miscellaneous	$ 28,118,580
Safety - Proportionate	38,764,891
Total Net Pension Liability	$ 66,883,471

The following summarizes the changes in the total pension liability, fiduciary net position and net pension liability of the City's Miscellaneous agent multiple employer plan:

	Total Pension Liability	**Plan Fiduciary Net Position**	**Net Pension Liability (Asset)**
Beginning Balance	$ 109,150,926	$ 80,290,205	$ 28,860,721
Service cost	2,147,141	-	2,147,141
Interest in Total Pension Liability	7,456,529	-	7,456,529
Difference between actual and expected experience	301,238	-	301,238
Employer contributions	-	4,768,135	(4,768,135)
Employee contributions	-	1,081,416	(1,081,416)
Net investment income	-	4,977,682	(4,977,682)
Benefit payments	(5,162,471)	(5,162,471)	-
Administrative expenses	-	(59,042)	59,042
Net changes	4,863,579	5,605,720	(742,141)
Ending Balance	$ 114,014,505	$ 85,895,925	$ 28,118,580

The City's net pension liability for the Fire and Police Safety plans are measured as the proportionate share of the net pension liability while the Miscellaneous plan's net pension liability is a direct calculation based on its actuarial study and is not proportionate. The net pension liability of all the Plans are measured as of June 30, 2023, and the total pension liability for the Plans used to calculate the net pension liability was determined by an actuarial valuation as of June 30, 2022 rolled forward to June 30, 2023 using standard update procedures. The City's proportion of the net pension liability for the Fire and Police Plans was based on a projection of the City's long-term share of contributions to the pension plans relative to the projected contributions of all participating employers, actuarially determined. The City's proportionate share of the net pension liability for the Fire and Police Plans as of the fiscal years ended June 30, 2023 and 2024 was as follows:

	Safety
June 30, 2023	0.3028%
June 30, 2024	0.3107%
Change in Proportions	0.0079%

For the year ended June 30, 2024, the City recognized a pension expense of $11,112,957. The following summarizes the pension expense components by plan:

	Miscellaneous	Safety	Total
Pension expense per plans	$ 3,390,852	$ 4,597,351	$ 7,988,203
GASB 68 adjustments	2,144,826	3,317,931	5,462,757
Pension expense per government-wide statements	$ 5,535,678	$ 7,915,282	$ 13,450,960

At June 30, 2024, the City reported deferred outflows of resources and deferred inflows of resources related to pensions from the following sources:

	Miscellaneous		**Safety**	
	Deferred Outflows of Resources	Deferred Inflows of Resources	Deferred Outflows of Resources	Deferred Inflows of Resources
Pension contributions subsequent to measurement date	$ 3,184,093	$ -	$ 4,925,622	$ -
Changes in assumptions	719,995	-	2,262,371	-
Differences between expected and actual experiences	180,743	58,850	2,846,058	243,653
Changes in proportions	-	-	2,645,793	-
Differences between the employer's contributions and the employer's proportionate share of contributions	-	-	201,221	1,712,841
Net differences between projected and actual earnings on plan investments	3,902,059	-	5,304,965	-
Total	$ 7,986,890	$ 58,850	$ 18,186,030	$ 1,956,494

The City reported $8,109,715 as deferred outflows of resources related to contributions subsequent to the measurement date that will be recognized as a reduction of the net pension liability in the year ended June 30, 2025.

Other amounts reported as deferred outflows of resources and deferred inflows of resources related to pensions will be recognized as pension expense as follows:

	Deferred Outflows/(Inflows) of Resources	
Fiscal Year Ending:	Miscellaneous	Safety
2025	$ 1,492,253	$ 3,998,375
2026	496,502	2,728,366
2027	2,641,142	4,429,101
2028	114,050	148,072
2029	-	-
Thereafter	-	-
Total	$ 4,743,947	$ 11,303,914

Actuarial Assumptions
The total pension liabilities in the June 30, 2022 actuarial valuations were determined using the following actuarial assumptions:

Valuation Date	June 30, 2022
Measurement Date	June 30, 2023
Actuarial Cost Method	Entry-Age Normal
Asset Valuation Method	Market Value of Assets
Actuarial Assumptions:	
Discount Rate	6.90%
Inflation	2.30%
Projected Salary Increase	(1)
Investment Rate of Return	6.9% (2)
Retirement Age	(3)
Mortality	(3)

(1) Varies by age and service
(2) Net of pension plan investment expenses, including inflation
(3) Derived using CalPERS' membership data for all funds

Discount Rate
The discount rate used to measure the total pension liability was 6.9 percent for the Plan. To determine whether the municipal bond rate should be used in the calculation of a discount rate for the Plan, CalPERS stress tested plans that would most likely result in a discount rate that would be different from the actuarially assumed discount rate. Based on the testing, none of the tested plans run out of assets. Therefore, the current 6.9 percent discount rate is adequate and the use of the municipal bond rate calculation is not necessary. The long term expected discount rate of 6.9 percent will be applied to all plans in the Public Employees Retirement Fund (PERF). The stress test results are presented in a detailed report that can be obtained from the CalPERS website. The long-term expected rate of return on pension plan investments was determined using a building-block method in which best-estimate ranges of expected future real rates of return (expected returns, net of pension plan investment expense and inflation) are developed for each major asset class.

CalPERS will continue to check the materiality of the difference in calculation until such time as they change their methodology. The long-term expected rate of return on pension plan investments was

determined using a building-block method in which best-estimate ranges of expected future real rates of return (expected returns, net of pension plan investment expense and inflation) are developed for each major asset class. In determining the long-term expected rate of return, CalPERS took into account both short-term and long-term market return expectations as well as the expected pension fund cash flows. Using historical returns of all the funds' asset classes, expected compound returns were calculated over the short-term (first 10 years) and the long-term (11-60 years) using a building-block approach. Using the expected nominal returns for both short-term and long-term, the present value of benefits was calculated for each fund. The expected rate of return was set by calculating the single equivalent expected return that arrived at the same present value of benefits for cash flows as the one calculated using both short-term and long-term returns. The expected rate of return was then set equivalent to the single equivalent rate calculated above and rounded down to the nearest one quarter of one percent. The table below reflects the long-term expected real rate of return by asset class. The rate of return was calculated using the capital market assumptions applied to determine the discount rate and asset allocation. These rates of return are net of administrative expenses.

Asset Class (a)	Assumed Asset Allocation	Long-Term Expected Real Return (1)(2)
Global Equity Cap Weighted	30.00%	4.54%
Global Equity NonCap Weighted	12.00%	3.84%
Private Equity	13.00%	7.28%
Treasury	5.00%	0.27%
Mortgage-backed Securities	5.00%	0.50%
Investment Grade Corporates	10.00%	1.56%
High Yield	5.00%	2.27%
Emerging Market Debt	5.00%	2.48%
Private Debt	5.00%	3.57%
Real Assets	15.00%	3.21%
Leverage	-5.00%	-0.59%
Total	100.00%	

(1) An expected inflation of 2.3% used for this period.
(2) Figures are based on the 2021-22 Asset Liability Study.

C. Sensitivity of the Net Pension Liability to Changes in the Discount Rate

The following presents the City's net pension liability for the Plans, calculated using the discount rate for the Plans, as well as what the City's net pension liability would be if it were calculated using a discount rate that is 1-percentage point lower or 1-percentage point higher than the current rate:

	Miscellaneous	Safety
1% Decrease	5.90%	5.90%
Net Pension Liability	$ 43,304,228	$ 59,618,742
Current Discount Rate	6.90%	6.90%
Net Pension Liability	$ 28,118,580	$ 38,764,891
1% Increase	7.90%	7.90%
Net Pension Liability	$ 15,569,966	$ 21,715,383

Pension Plan Fiduciary Net Position
Detailed information about each pension plan's fiduciary net position is available in the separately issued CalPERS financial reports.

NOTE 12 - OTHER POSTEMPLOYMENT BENEFITS PLAN (OPEB)

Plan Description
The City provides certain health care benefits for eligible retired employees through the California Public Employees' Retirement System (CalPERS) under the Public Employees' Medical and Hospital Care Act (PEMHCA). This is a single-employer defined-benefit postemployment healthcare benefits plan. Eligible retirees may enroll in any of the available CalPERS medical plans. CalPERS issues a separate annual comprehensive financial report that includes financial statements and required supplementary information. Copies of the report may be obtained from the CalPERS website at www.calpers.ca.gov.

Commencing with fiscal year 2014, the City participates in the California Employers' Retiree Benefit Trust (CERBT) Fund, which is administered by CalPERS. CERBT is a tax-qualified irrevocable trust organized under Internal Revenue Code Section 115 and established to prefund retiree healthcare benefits. CERBT, an agent multiple-employer trust, issues a publicly available financial report including GASB Statement No. 74, Financial Reporting for Postemployment Benefits Plans Other Than Pension Plans, disclosure information in aggregate with the other CERBT participating employers. That report can be obtained from the CalPERS Web site at www.calpers.ca.gov.

Benefits Provided
The City provides post-retirement benefits to eligible employees as follows:

Benefits Provided:	*City monthly cap:* 2022 Misc $1,200 2022 Safety $1,200 Unrepresented/Hourly receive PEMHCA minimum ($133/month 2018), 1 Fire retiree receives higher existing benefit of $1,766/month, and 2 Police retiree receive the higher existing benefit of $1,377/month
Eligibility:	Full-time employees retiring directly from City under CalPERS (age 50 and 5 years, or disability) Miscellaneous PEPRA retirees age 52 and 5 years
Surviving Spouse:	Surviving spouse coverage based on retirement plan election Same benefit continues to surviving spouse
Other:	No City paid dental, vision, life, Medicare Part B Previous medical benefits can be found in the back of the report

Employees Covered by Benefit Terms

At June 30, 2024, the benefit terms covered the following employees:

Active employees	203
Inactive employees	198
Total employees	401

Contributions
The City makes contributions, based on an actuarially determined rate, which are approved by the authority of City Council. Total contributions during the year were $2,474,828. Total contributions included in the measurement period were $2,287,229. The actuarially determined contribution for the fiscal year was $1,897,543. The City's contributions were 9.35% of covered employee payroll during the fiscal year ended June 30, 2024. Employees are not required to contribute to the plan.

Actuarial Assumptions
The following summarizes the actuarial assumptions for the OPEB plan included in this fiscal year:

Valuation Date:	June 30, 2022
Measurement Date:	June 30, 2022
Actuarial Cost Method:	Entry-Age Normal, Level % of pay
Amortization Period:	10 years
Asset Valuation Method:	Investment gains and losses spread over 5-year rolling period
Actuarial Assumptions:	
Discount Rate	6.25%
Inflation	2.50%
Payroll Increases	2.75%
Medical Trend	Non-Medicare - 8.5% for 2024, decreasing to an ultimate rate of 3.45% in 2076 Medicare (Non-Kaiser) - 7.5% for 2024, decreasing to an ultimate rate of 3.45% in 2076 Medicare (Kaiser) - 6.25% for 2024, decreasing to an ultimate rate of 3.45% in 2076
Investment Rate of Return	6.25%, Net of OPEB plan investment expenses, including inflation
Mortality	CalPERS 2000-2019 Experience Study
Retirement	Actives and Retirees currently covered: 100% Actives currently waived: 80% Retirees currently Waived: 10% elect at 65 Unrepresented & Hourly: 60%
Service Requirement	Misc. Benefit 2%@55 Expected Retirement Age (ERA) 61.2 Safety Benefit 3%@50 ERA 54.7 (Fire) 54.2 (Police) PEPRA Misc. Benefit 2%@62 ERA 63.1 PEPRA Safety Benefit 2.7%@57 ERA 56.7 (Fire) 55.5 (Police)

Discount Rate
The projection of cash flows used to determine the discount rate assumed that the City contribution will be made at rates equal to the actuarially determined contribution rates. Based on those assumptions, the OPEB plan's fiduciary net position was projected to cover all future OPEB payments. Therefore, the discount rate was set to be equal to the long-term expected rate of return which was applied to all periods of projected benefit payments to determine the total OPEB liability.

Long-Term Expected Rate of Return
The long-term expected rate of return on OPEB plan investments was determined using a building-block method in which expected future real rates of return (expected returns, net of OPEB plan investment expense and inflation) are developed for each major asset class. These ranges are combined to produce the long-term expected rate of return by weighting the expected future real rates of return by the target asset allocation percentage and by adding expected inflation. The target allocation and best estimates of arithmetic real rates of return for each major asset class are summarized in the following table:

Asset Class	Percentage of Portfolio	Long-Term Expected Rate of Return
Global Equity	49.00%	4.56%
Fixed Income	23.00%	1.56%
TIPS	5.00%	-0.08%
Commodities	3.00%	1.22%
REITs	20.00%	4.06%
Total	100.00%	
Weighted Average Return		3.44%
Assumed Long-Term Rate of Inflation		2.50%
Expected Long-Term Net Rate of Return, Rounded		6.25%

Net OPEB Liability
The City's net OPEB liability was measured as of June 30, 2022 (measurement date), and the total OPEB liability used to calculate the net OPEB liability was determined by an actuarial valuation as of June 30, 2022 (valuation date) for the fiscal year ended June 30, 2024 (reporting date). The following summarizes the changes in the net OPEB liability for the year ended June 30, 2024:

Fiscal Year Ended June 30, 2024 (Measurement Date June 30, 2022)	Total OPEB Liability	Plan Fiduciary Net Position	Net OPEB Liability (Asset)
Balance at June 30, 2023	$ 39,572,424	$ 34,954,578	$ 4,617,846
Service cost	1,354,667	-	1,354,667
Interest in Total OPEB Liability (TOL)	2,674,222	-	2,674,222
Employer contributions	-	2,287,229	(2,287,229)
Actual investment income	-	2,263,435	(2,263,435)
Administrative expenses	-	(30,262)	30,262
Benefit payments	(2,061,828)	(2,061,828)	-
Net changes	1,967,061	2,458,574	(491,513)
Balance at June 30, 2024	$ 41,539,485	$ 37,413,152	$ 4,126,333

As of June 30, 2024, the City had total assets of $1,391,028 in a City Retirees Health Fund. Cash in the Retirees Health Fund is transferred to CERBT periodically.

Deferred Inflows and Outflows of Resources
At June 30, 2024, the City reported deferred outflows of resources and deferred inflows of resources related to OPEB from the following sources:

	Deferred Outflows of Resources	Deferred Inflows of Resources
Difference between actual and expected experience	$ -	$ 2,376,280
Difference between actual and expected earnings	2,490,423	-
Change in assumptions	935,633	-
OPEB contribution subsequent to measurement date	2,474,828	-
Totals	$ 5,900,884	$ 2,376,280

Of the total amount reported as deferred outflows of resources related to OPEB, $2,474,828 resulting from City contributions subsequent to the measurement date and before the end of the fiscal year will be included as a reduction of the net OPEB liability in the year ended June 30, 2025.

Other amounts reported as deferred outflows of resources and deferred inflows of resources related to OPEB will be recognized in OPEB expense as follows:

Year Ended June 30,	
2025	$ 327,277
2026	56,603
2027	1,370,284
2028	(377,897)
2029	(326,491)
Thereafter	-
Total	$ 1,049,776

OPEB Expense

The following summarizes the OPEB expense by source during the year ended June 30, 2024:

Service cost	$ 1,354,667
Interest in TOL	2,674,222
Expected investment income	(2,263,435)
Actuarial adjustments	(214,203)
Difference between actual and expected experience	(561,081)
Difference between actual and expected earnings	578,430
Change in assumptions	322,562
Administrative expenses	30,262
OPEB Expense	**$ 1,921,424**

The following summarizes changes in the net OPEB liability as reconciled to OPEB expense during the year ended June 30, 2024:

Net OPEB liability ending	$ 4,126,333
Net OPEB liability beginning	(4,617,846)
Change in net OPEB liability	(491,513)
Changes in deferred outflows	1,876,835
Changes in deferred inflows	(1,525,726)
Employer contributions and implicit subsidy	2,061,828
OPEB Expense	**$ 1,921,424**

Sensitivity to Changes in the Discount Rate

The net OPEB liability of the City, as well as what the City's net OPEB liability would have been if calculated using a discount rate with one percentage point lower and one percentage point higher, is as follows:

	Discount Rate		
	(1% Decrease)	**6.25%**	**(1% Increase)**
Net OPEB Liability (Asset)	$ 8,433,121	$ 4,126,333	$ 532,620

Sensitivity to Changes in the Healthcare Cost Trend Rates

The net OPEB liability of the City, as well as what the City's net OPEB liability would have been if it were calculated using healthcare cost trend rates one percentage point lower and one percentage point higher than current healthcare cost trend rates, is as follows:

	Trend Rate		
	(1% Decrease)	**Current**	**(1% Increase)**
Net OPEB Liability (Asset)	$ 1,982,992	$ 4,126,333	$ 6,076,430

NOTE 13 - COMMITMENTS AND CONTINGENCIES

A. Commitments

The City had the following significant unexpended contractual commitments as of June 30, 2024:

Project Name	Original Commitment	Commitment Remaining
Construction Inspection Services	$ 675,000	$ 449,806
Lenslock Service and Cameras	615,781	246,312
SWRA Trails for CIP	828,830	147,946
SWRA Building Demolition	357,000	17,000
Whitney Park Phase II Asphalt Pump Track	67,300	47,785
City Hall Office Space Remodel	32,500	8,473
Pavement Rehabilitation	2,181,967	716,097
Annual Road Maintenance	1,450,003	597,174
Lonetree and Stanford Median Improvements	436,770	113,371
Five Star Blvd & Stanford Ranch Intersection	150,000	30,266
Five Star & Destiny Drive Reconstruction	1,388,998	678,867
Whitney Ranch Parkway Widening	400,000	291,937
Sunset Blvd Widening	200,000	143,718
Aguilar Road Improvements	722,747	363,834
Rocklin Road @ Pacific Street Roundabout	6,703,968	847,752
Stormwater Pipe Replacement	1,723,070	394,551
Mission Hills Phase II	973,182	124,553
Mission Hills Phase IV	1,643,677	1,034,904
I-80 Westbound Auxiliary Lane	2,675,000	2,417,755
Rocklin Road Sierra College Corridor	7,175,000	5,040,873
Sierra College Boulevard Widening	600,000	577,725
Monument Springs Bridge	1,710,994	1,534,932
Blue Oaks Pedestrian Crossing	800,000	679,892
Northwest Rocklin Annex Sewer	50,500	3,994
Totals	$ 33,562,287	$ 16,509,517

B. Lawsuits

The City is presently involved in certain matters of litigation that have arisen in the normal course of conducting City business. Based upon consultation with the City Attorney, these cases, in aggregate, are not expected to result in a material adverse financial impact on the City. Additionally, City management believes that the City's insurance programs are sufficient to cover any potential losses should an unfavorable outcome materialize.

C. Federal, State and County Grant Programs (Contingencies)

The City participates in a number of Federal, State and County programs that are fully or partially funded by grants received from other governmental units. Expenditures financed by grants are subject to audit by the appropriate grantor government. If expenditures are disallowed due to noncompliance with grantor

program regulations, the City may be required to reimburse the grantor government. As of June 30, 2024, some amounts of grant expenditures have not been audited, but the City believes that disallowed expenditures, if any, based on subsequent audits will not have a material effect on any individual governmental funds or the overall financial condition of the City.

NOTE 14 - SPECIAL TAX ASSESSMENT DISTRICTS

The Mello-Roos Community Facilities Act of 1982 (Mello-Roos Act) allows establishment of Community Facilities Districts (CFD). Under the Mello-Roos Act, special taxes are levied by CFDs to provide services such as police and fire protection, and to finance infrastructure improvements. The City of Rocklin has established CFDs that have issued bonds and levied taxes under the Mello-Roos Act. The City is not liable for repayment of these bonds and acts only as an agent for the property owners/bond holders in collecting and forwarding the special taxes. The assets held by the City on behalf of these districts and related liabilities are recorded in Custodial funds. Special taxes have also been levied under the Mello-Roos Act to pay for services provided by CFD's No. 1, No. 5, and No. 6. The activities of these CFDs are accounted for in Special Revenue funds, which are presented in the City's Basic Financial Statements.

The Landscaping and Lighting Act of 1972 (Lighting Act) allows local government agencies to form Landscape and Lighting Districts for the purpose of financing the costs and expenses of landscaping and lighting public areas. The City has formed two districts which levy special assessments under the Lighting Act: Lighting Maintenance District No.1 and Landscaping and Lighting Maintenance District No. 2. The activities of these districts are accounted for in Special Revenue funds and are included in the City's Basic Financial Statements. The disclosures in Note 13 include those required by California Government Code section 50075.1.

The following table presents the balances of the various district bonds as of June 30, 2024:

Community Facilities District Bonds	Balance June 30, 2024
CFD No. 6 - Sunset West Drainage	$ 154,311
CFD No. 7 - Sunset West Interchange/Major St	-
CFD No. 8 - Sunset West Park Drive	399,355
CFD No. 9 - Sunset West/Blue Oaks	475,517
CFD No. 10 - 2015 Whitney Ranch	18,975,000
CFD No. 10 - 2019 Whitney Ranch	15,580,000
CFD No. 10 - 2022 Whitney Ranch	13,605,000
CFD No. 11 - Sierra College Interchange	3,710,000
Total CFD Bonds	$ 52,899,183

Community Facilities District No. 1 Special Tax

Community Facilities District No. 1 was formed in 1986 to provide fire protection and suppression services and ambulance and paramedic services to various developments within the City of Rocklin. These services are provided by the City of Rocklin Fire Department. The cost for these services is born by the City and partially offset by the special tax levied on parcels within the district. As such, district expenditures are primarily a reimbursement to the City. For fiscal year 2024, revenues were $2,371,165 and reimbursement expenditures were $2,371,164. If expenditures exceed revenues in a fiscal year, the excess expenditures are paid with cash on hand. There were no active projects during the fiscal year.

Community Facilities District No. 3 Bonds
Community Facilities District No. 3 was formed in 1990 to issue bonds for street related improvements and projects, such as the construction of roadways, storm drainage facilities, sanitary sewer facilities, water lines, and gas lines. The district's improvements and projects have been completed. For fiscal year 2024, revenues were $- with no expenditures. The primary source of revenues is special taxes and expenditures are for activities related to debt service. If expenditures exceed revenues in a fiscal year, the excess expenditures are paid with cash on hand.

Community Facilities District No. 5 Special Tax
Community Facilities District No. 5 was formed in 1996 to fund the operation and maintenance of street and parkway lights, streetscapes, open space, and parks in various developments within the City of Rocklin. For fiscal year 2024, revenues were $7,125,230 and expenditures were $6,071,660. The primary source of revenues is special taxes and expenditures are for operating costs such as payroll, maintenance, professional services, and utilities. If expenditures exceed revenues in a fiscal year, the excess expenditures are paid with cash on hand. There were no active projects during the fiscal year.

Community Facilities District No. 6 Bonds
Community Facilities District No. 6 was formed in 1998 to issue bonds for installation, construction, and acquisition of drainage facilities and open space. The district's improvements and projects have been completed. For fiscal year 2024, revenues were $96,090 and expenditures were $92,762. The primary source of revenues is special taxes and expenditures are for activities related to debt service. If expenditures exceed revenues in a fiscal year, the excess expenditures are paid with cash on hand.

Community Facilities District No. 6 Special Tax
A special tax has been levied to fund the operation and maintenance of the open space and storm drainage facilities of Community Facilities District No. 6. For fiscal year 2024, revenues were $373,618 and expenditures were $284,527. The primary source of revenue is special taxes and expenditures are for operating costs such as payroll, maintenance and professional services. If expenditures exceed revenues in a fiscal year, the excess expenditures are paid with cash on hand. There were no active projects during the fiscal year.

Community Facilities District No. 7 Bonds
Community Facilities District No. 7 was formed in 1997 to issue bonds for the construction and acquisition of a highway interchange and connectors to provide access between Blue Oaks Blvd. and Highway 65. The district's improvements and projects have been completed. For fiscal year 2024, revenues were $1,624 and expenditures were $-. The primary source of revenues is special taxes and expenditures are for activities related to debt service. If expenditures exceed revenues in a fiscal year, the excess expenditures are paid with cash on hand.

Community Facilities District No. 8 Bonds
Community Facilities District No. 8 was formed in 1998 to issue bonds for the construction, acquisition, and widening of portions of Park Dr. and Blue Oaks Blvd. and the installation of backbone utility infrastructure within the same area. The district's improvements and projects have been completed. For fiscal year 2024, revenues were $229,656 and expenditures were $219,266. The primary source of revenues is special taxes and expenditures are for activities related to debt service. If expenditures exceed revenues in a fiscal year, the excess expenditures are paid with cash on hand.

Community Facilities District No. 9 Bonds
Community Facilities District No. 9 was formed in 1998 to issue bonds for the construction, acquisition, and widening of portions of Lone Tree, Blue Oaks, and West Oaks Boulevards and installation of traffic

control lights. The district's improvements and projects have been completed. For fiscal year 2024, revenues were $266,733 and expenditures were $258,922. The primary source of revenues is special taxes and expenditures are for activities related to debt service. If expenditures exceed revenues in a fiscal year, the excess expenditures are paid with cash on hand.

Community Facilities District No. 10 Bonds
Community Facilities District No. 10 was formed in 2005 to issue bonds for the construction of transportation, wastewater system, drainage, and landscaping facilities and other public improvements for development within the Whitney Ranch District. During fiscal year 2016, $27.09 million in special tax bonds were issued to refund the original bonds and provide $5.85 million for additional improvements. During fiscal year 2019, $17.828 million in special tax bonds were issued to finance the acquisition of public facilities. During fiscal year 2022, $13.605 million in special tax bonds were issued to finance the acquisition of public facilities. For fiscal year 2024, revenues were $3,526,505 and expenditures were $3,179,631. The primary source of revenues is special taxes and expenditures are for activities related to debt service. If expenditures exceed revenues in a fiscal year, the excess expenditures are paid with cash on hand.

Community Facilities District No. 11 Bonds
Community Facilities District No. 11 was formed in 2006 to issue bonds for the construction of a new interchange on Interstate 80 at Sierra College Blvd. This project has been completed. For fiscal year 2024, revenues were $629,469 and expenditures were $572,499. The primary source of revenues is special taxes and expenditures are for activities related to debt service. If expenditures exceed revenues in a fiscal year, the excess expenditures are paid with cash on hand.

Lighting Maintenance District No. 1
Lighting Maintenance District No. 1 was formed in 1979 to provide maintenance of streetlights and safety lighting throughout various portions of the City of Rocklin. During the fiscal year, 1,632 streetlights, 20 traffic signals, 3 flashing lights, and safety lighting was maintained. For fiscal year 2024, revenues were $247,695 and expenditures were $247,695. The primary source of revenues is special assessments and expenditures are primarily for payroll, maintenance, professional services, and utilities. There were no active projects during the fiscal year.

Landscaping and Lighting Maintenance District No. 2
Landscaping and Lighting Maintenance District No. 2 was formed in 1996 to provide maintenance of streetlights, safety lighting, and roadway landscaping throughout various portions of the City of Rocklin. During the fiscal year, 2,924 streetlights, 52 traffic signals, and 154 irrigation controllers for roadway landscaping and safety lighting was maintained. For fiscal year 2024, revenues were $2,720,098 and expenditures were $2,768,650. The primary source of revenues is special assessments and expenditures are primarily for payroll, maintenance, professional services, and utilities.

Park Development and Maintenance Tax
The Park Development and Maintenance Tax was enacted in 1998, reenacted in 2009, and reenacted in 2019, to provide development, installation, servicing, maintenance, repair and operation of parks in the City of Rocklin. From fiscal year 2010 through 2024, there have been no projects funded by the tax. The tax revenue has been primarily used for payroll, professional services and utilities in connection with park maintenance and operation.

The table below presents historical park tax revenues and related expenditures for the last five fiscal years. Expenditures in excess of park tax revenues are paid from general fund.

Year Ended June 30,	Park Tax Revenue	Expenditures	Revenue Over (Under) Expenditures
2019	$ 581,089	$ 1,969,053	$ (1,387,964)
2020	612,175	2,413,143	(1,800,968)
2021	627,285	2,466,342	(1,839,057)
2022	637,420	2,518,471	(1,881,051)
2023	653,165	2,740,169	(2,087,004)
2024	659,060	2,814,453	(2,155,393)
Total	$ 3,770,194	$ 14,921,631	$ (11,151,437)

NOTE 15 - SUCCESSOR AGENCY TRUST (FORMER ROCKLIN REDEVELOPMENT AGENCY)

Pursuant to Assembly Bills 1X26 and 1484 ("the Bills"), all redevelopment agencies in the State of California were dissolved on February 1, 2012. The Bills authorized certain local agencies, such as a city or county, to become the Successor Agency. On January 1, 2012, the City Council elected to become the Successor Agency for the former Rocklin Redevelopment Agency. The Successor Agency is responsible for winding down the affairs of the former redevelopment agency, which includes making payments due for enforceable obligations and disposition of the assets of the former redevelopment agency. Examples of enforceable obligations include payments to contractors, bond debt service payments, and loan payments. The Successor Agency has an oversight board that supervises its work. The Oversight Board is comprised of representatives of the local agencies that serve the redevelopment project areas within the County.

Successor agencies are only allocated revenue in the amount necessary to pay the enforceable obligations of the former redevelopment agency. The agency will only receive this revenue until all enforceable obligations have been paid in full and all assets have been liquidated. The assets and activities of the dissolved redevelopment agency are reported in a fiduciary fund (private purpose trust fund) in the financial statements of the City.

On December 10, 2013, by resolution, the City Council elected to assume responsibility for performing the housing functions of the former Rocklin Redevelopment Agency. All housing assets were transferred from the Successor Agency Housing Fund to the City of Rocklin. The housing assets previously accounted for as a private' purpose trust fund are now accounted for as a special revenue fund in the City's financial statements.

Successor Agency Noncurrent Liabilities

The following is a summary of changes in long-term liabilities for governmental activities for the year ended June 30, 2024:

Description	Beginning Balance	Additions	Deletions	Ending Balance	Due Within One Year
General Long-Term Debt:					
2018 Refunding Tax Allocation Bonds	$ 16,100,000	$ -	$ 790,000	$ 15,310,000	$ 835,000
Amortized Premium:					
2018 Refunding Tax Allocation Bonds	1,580,856	-	105,390	1,475,466	105,390
Total Noncurrent Liabilities	$ 17,680,856	$ -	$ 895,390	$ 16,785,466	$ 940,390

2018 Tax Allocation Refunding Bonds
During fiscal year 2019, the Successor Agency issued the Series 2018 Tax Allocation Bonds totaling $19,175,000, at a premium of $2,107,808, to defease and redeem all amounts under the 2002 Tax Allocation Bonds, 2005 Tax Allocation Bonds, and 2007 Tax Allocation Bonds. The bonds are secured by a pledge of, and lien on, and repaid from property tax revenues deposited with respect to the Project Area from time to time in the Redevelopment Property Tax Trust Fund established and held by the Placer County Auditor-Controller. If an event of default has occurred under the Indenture and is continuing, the Trustee may, or, if requested in writing by the owners of a majority in aggregate principal amount of the Bonds then outstanding, the Trustee shall, (a) declare the principal of the Bonds, together with the accrued interest thereon, to be due and payable immediately, and upon any such declaration the same shall become immediately due and payable, anything in the Indenture or in the Bonds to the contrary notwithstanding, and (b) the Trustee shall, subject to the provisions of the Indenture, exercise any other remedies available to the Trustee and the Bond Owners in law or at equity. The term of the bonds is 19 years. Interest rates on the bonds range from 3% to 5%. Principal payments ranging from $630,000 to $1,470,000 are payable annually on September 1st and interest payments ranging from $11,813 to $440,363 were payable semi-annually on March 1st and September 1st, through September 1, 2037. The aggregate debt service savings was $4,742,243 from this refunding and the loss on defeasance was $289,857.

The following summarizes the Successor Agency's future debt service obligations:

June 30,	Principal	Interest	Total
2025	$ 835,000	$ 698,850	$ 1,533,850
2026	870,000	656,225	1,526,225
2027	915,000	611,600	1,526,600
2028	955,000	564,850	1,519,850
2029	1,010,000	515,725	1,525,725
2030-2034	5,850,000	1,749,126	7,599,126
2035-2039	4,875,000	331,587	5,206,587
Total	$ 15,310,000	$ 5,127,963	$ 20,437,963

ROCKLIN
CALIFORNIA

REQUIRED SUPPLEMENTARY INFORMATION

City of Rocklin
Schedule of Revenues, Expenditures, and Changes in Fund Balances
Budget and Actual (GAAP Basis)
General Fund
For the Year Ended June 30, 2024

	Budgeted Amounts			Variance with Final Budget
	Original	Final	Actual Amounts	Positive (Negative)
REVENUES				
Taxes and assessments	$ 49,928,900	$ 49,508,900	$ 51,827,365	$ 2,318,465
Licenses and permits	3,873,350	3,873,350	3,473,771	(399,579)
Fines and forfeitures	141,600	141,600	184,117	42,517
Intergovernmental	618,200	618,200	868,230	250,030
Charges for services	2,592,200	2,592,200	2,915,689	323,489
Use of money and property	2,518,400	2,968,400	4,994,199	2,025,799
Contributions and donations	2,365,000	2,365,000	3,111,744	746,744
Other revenues	577,850	577,850	646,646	68,796
Total Revenues	62,615,500	62,645,500	68,021,761	5,376,261
EXPENDITURES				
Current:				
General government	15,494,800	18,245,776	15,357,333	2,888,443
Public safety	36,338,300	37,066,281	33,426,901	3,639,380
Public works	3,592,400	3,963,308	3,636,685	326,623
Parks and recreation	5,267,000	5,349,608	5,083,514	266,094
Community development	6,117,000	6,549,615	4,929,487	1,620,128
Capital outlay	2,451,100	9,731,015	3,684,277	6,046,738
Debt service:				
Principal retirement	-	-	2,686	(2,686)
Interest and fiscal charges	-	-	10,249	(10,249)
Total Expenditures	69,260,600	80,905,603	66,131,132	14,774,471
Excess (Deficiency) of Revenues over Expenditures	(6,645,100)	(18,260,103)	1,890,629	20,150,732
OTHER FINANCING SOURCES (USES)				
Transfers in	7,828,300	7,878,300	5,918,712	(1,959,588)
Transfers out	(2,054,900)	(2,659,450)	(558,874)	2,100,576
Total Other Financing Sources (Uses)	5,773,400	5,218,850	5,359,838	140,988
Net Change in Fund Balances	(871,700)	(13,041,253)	7,250,467	20,291,720
Fund Balances Beginning	54,220,156	54,220,156	54,220,156	-
Fund Balances Ending	$ 53,348,456	$ 41,178,903	$ 61,470,623	$ 20,291,720

The City's legal budget authority is by the fund level.

City of Rocklin
Schedule of Revenues, Expenditures, and Changes in Fund Balances
Budget and Actual (GAAP Basis)
SB325 Sales Tax
For the Year Ended June 30, 2024

	Budgeted Amounts			Variance with Final Budget
	Original	Final	Actual Amounts	Positive (Negative)
REVENUES				
Taxes and assessments	$ 5,381,900	$ 5,381,900	$ 4,940,006	$ (441,894)
Intergovernmental	650,300	650,300	407,467	(242,833)
Use of money and property	97,000	97,000	206,821	109,821
Total Revenues	6,129,200	6,129,200	5,554,294	(574,906)
EXPENDITURES				
Current:				
General government	30,000	30,000	118,248	(88,248)
Public works	3,124,100	3,282,611	2,648,899	633,712
Community development	567,300	632,417	333,160	299,257
Capital outlay	5,604,100	6,912,171	2,876,896	4,035,275
Total Expenditures	9,325,500	10,857,199	5,977,203	4,879,996
Excess (Deficiency) of Revenues over Expenditures	(3,196,300)	(4,727,999)	(422,909)	4,305,090
OTHER FINANCING SOURCES (USES)				
Transfers in	-	-	-	-
Transfers out	(1,019,800)	(1,019,800)	(821,653)	198,147
Total Other Financing Sources (Uses)	(1,019,800)	(1,019,800)	(821,653)	198,147
Net Change in Fund Balances	(4,216,100)	(5,747,799)	(1,244,562)	4,503,237
Fund Balances Beginning	6,668,586	6,668,586	6,668,586	-
Fund Balances Ending	$ 2,452,486	$ 920,787	$ 5,424,024	$ 4,503,237

The City's legal budget authority is by the fund level.

City of Rocklin

Schedule of Revenues, Expenditures, and Changes in Fund Balances
Budget and Actual (GAAP Basis)
Low and Moderate Income Housing Asset Fund
For the Year Ended June 30, 2024

	Budgeted Amounts			Variance with Final Budget
	Original	Final	Actual Amounts	Positive (Negative)
REVENUES				
Use of money and property	$ 190,200	$ 190,200	$ 439,609	$ 249,409
Total Revenues	190,200	190,200	439,609	249,409
EXPENDITURES				
Current:				
General government	2,700,000	2,674,000	39,429	2,634,571
Public safety	2,500	2,500	-	2,500
Community development	105,000	150,129	113,485	36,644
Total Expenditures	2,807,500	2,826,629	152,914	2,673,715
Excess (Deficiency) of Revenues over Expenditures	(2,617,300)	(2,636,429)	286,695	2,923,124
OTHER FINANCING SOURCES (USES)				
Transfers in	-	-	3,200	3,200
Transfers out	(150,000)	(150,000)	(143,706)	6,294
Total Other Financing Sources (Uses)	(150,000)	(150,000)	(140,506)	9,494
Net Change in Fund Balances	(2,767,300)	(2,786,429)	146,189	2,932,618
Fund Balances Beginning	13,140,918	13,140,918	13,140,918	-
Fund Balances Ending	$10,373,618	$10,354,489	$13,287,107	$ 2,932,618

The City's legal budget authority is by the fund level.

City of Rocklin
Schedule of Revenues, Expenditures, and Changes in Fund Balances
Budget and Actual (GAAP Basis)
Streets Grants
For the Year Ended June 30, 2024

	Budgeted Amounts			Variance with Final Budget
	Original	Final	Actual Amounts	Positive (Negative)
REVENUES				
Intergovernmental	$ 5,470,500	$ 7,023,020	$ 2,169,331	$ (4,853,689)
Total Revenues	5,470,500	7,023,020	2,169,331	(4,853,689)
EXPENDITURES				
Capital outlay	5,470,500	7,023,018	2,569,719	4,453,299
Total Expenditures	5,470,500	7,023,018	2,569,719	4,453,299
Excess (Deficiency) of Revenues over Expenditures	-	2	(400,388)	(400,390)
OTHER FINANCING SOURCES (USES)				
Transfers in	-	-	-	-
Transfers out	-	-	-	-
Total Other Financing Sources (Uses)	-	-	-	-
Net Change in Fund Balances	-	2	(400,388)	(400,390)
Fund Balances Beginning	(892,118)	(892,118)	(892,118)	-
Fund Balances Ending	$ (892,118)	$ (892,116)	$ (1,292,506)	$ (400,390)

The City's legal budget authority is by the fund level.

City of Rocklin
Schedule of Pension Contributions (GASB 68)
June 30, 2024

Miscellaneous Plan	2015	2016	2017	2018	2019
Contractually Required Contributions (Actuarially Determined)	$ 1,733,315	$ 1,796,306	$ 2,019,082	$ 2,128,089	$ 2,245,112
Contributions in Relation to Actuarially Determined Contributions	2,685,315	1,796,306	3,691,282	2,523,306	2,863,892
Contribution Deficiency (Excess)	(952,000)	-	(1,672,200)	(395,217)	(618,780)
Covered Employee Payroll	$ 9,856,574	$ 10,608,255	$ 10,273,081	$ 11,211,773	$ 11,276,404
Contributions as a Percentage of Covered Payroll	27.24%	16.93%	35.93%	22.51%	25.40%

Miscellaneous Plan	2020	2021	2022	2023	2024
Contractually Required Contributions (Actuarially Determined)	$ 2,525,776	$ 2,743,889	$ 3,090,721	$ 3,196,535	$ 3,184,093
Contributions in Relation to Actuarially Determined Contributions	2,915,971	6,432,032	3,090,721	4,768,135	3,184,093
Contribution Deficiency (Excess)	(390,195)	(3,688,143)	-	(1,571,600)	-
Covered Employee Payroll	$ 11,546,463	$ 11,597,699	$ 11,404,973	$ 11,558,710	$ 11,882,354
Contributions as a Percentage of Covered Payroll	25.25%	55.46%	27.10%	41.25%	26.80%

Safety Plan	2015	2016	2017	2018	2019
Contractually Required Contributions (Actuarially Determined)	$ 2,228,200	$ 2,561,660	$ 2,623,619	$ 2,825,491	$ 3,012,461
Contributions in Relation to Actuarially Determined Contributions	2,228,200	2,561,660	2,623,619	2,837,597	3,089,436
Contribution Deficiency (Excess)	-	-	-	(12,106)	(76,975)
Covered Employee Payroll	$ 8,344,457	$ 9,191,925	$ 9,200,222	$ 10,029,811	$ 10,838,835
Contributions as a Percentage of Covered Payroll	26.70%	27.87%	28.52%	28.29%	28.50%

Safety Plan	2020	2021	2022	2023	2024
Contractually Required Contributions (Actuarially Determined)	$ 3,501,382	$ 3,990,103	$ 4,280,173	$ 4,786,119	$ 4,925,622
Contributions in Relation to Actuarially Determined Contributions	3,501,382	4,143,874	4,280,173	4,786,119	4,925,622
Contribution Deficiency (Excess)	-	(153,771)	-	-	-
Covered Employee Payroll	$ 11,354,811	$ 11,888,369	$ 11,720,404	$ 13,126,407	$ 12,803,337
Contributions as a Percentage of Covered Payroll	30.84%	34.86%	36.52%	36.46%	38.47%

Notes to Schedule:

Valuation Date: June 30, 2022

Assumptions Used: Entry Age Method used for Actuarial Cost Method
Level Percentage of Payroll and Direct Rate Smoothing
3.8 Years Remaining Amortization Period
Inflation Assumed at 2.3%
Investment Rate of Returns set at 6.9%
The mortality table was developed based on CalPERS-specific data. The rates incorporate Generational Mortality to capture ongoing morality improvement using 80% of Scale MP 2020 published by the Society of Actuaries. For more details, please refer to the 2021 experience study report that can be found on the CalPERS website.

The CalPERS discount rate was increased from 7.5% to 7.65% in FY 2016, decreased from 7.15% in FY2018 and 6.9% in FY2023.

The CalPERS mortality assumptions were adjusted in fiscal year 2023.

City of Rocklin

Schedule of Changes in Net Pension Liabilities, Net Pension Liabilities and Proportionate Shares (GASB 68)

June 30, 2024

Miscellaneous Plan (Agent-Multi Employer)	2015	2016	2017	2018	2019
Total Pension liability					
Service cost	$ 1,502,398	$ 1,453,844	$ 1,558,565	$ 1,668,040	$ 1,838,731
Interest	4,540,630	4,835,092	5,163,328	5,444,560	5,748,392
Changes of benefit terms	-	-	-	-	-
Diff. bet. expected and actual exper.	-	(1,262,496)	-	4,723,245	(507,928)
Changes of assumptions	-	251,382	655,412	130,415	764,300
Benefit payments	(2,184,035)	(2,507,060)	(2,905,028)	(3,049,139)	(3,360,693)
Net change in Total Pension Liability	3,858,993	2,770,762	4,472,277	8,917,121	4,482,802
Total Pension Liability - beginning	60,882,549	64,741,542	67,512,304	71,984,581	80,901,702
Total Pension Liability - ending	$ 64,741,542	$ 67,512,304	$ 71,984,581	$ 80,901,702	$ 85,384,504
Plan fiduciary net position					
Employer contributions	$ 1,521,604	$ 2,685,315	$ 1,796,306	$ 3,691,282	$ 2,523,306
Employee contributions	714,896	729,001	739,091	759,805	867,085
Net investment income	7,102,833	1,095,538	289,358	5,590,957	4,804,549
Benefit payments	(2,184,035)	(2,507,060)	(2,905,028)	(3,049,139)	(3,360,693)
Net plan to plan resource movement	-	49	-	-	(141)
Administrative expense	-	(56,265)	(30,457)	(73,620)	(88,483)
Other misc income (expense)	-	-	-	-	(168,031)
Net change in plan fiduciary net position	7,155,298	1,946,578	(110,730)	6,919,285	4,577,592
Plan fiduciary net position - beginning	40,872,391	48,027,689	49,974,267	49,863,537	56,782,822
Plan fiduciary net position - ending	$ 48,027,689	$ 49,974,267	$ 49,863,537	$ 56,782,822	$ 61,360,414
Net Pension Liability (NPL)	$ 16,713,853	$ 17,538,037	$ 22,121,044	$ 24,118,880	$ 24,024,090
Plan fiduciary net position as a percentage of the total Pension liability	74.18%	74.02%	69.27%	70.19%	71.86%
Covered payroll	$ 9,826,020	$ 9,856,574	$ 10,608,255	$ 10,273,081	$ 11,211,773
NPL as a percentage of covered payroll	170.10%	177.93%	208.53%	234.78%	214.28%

Safety Plan (Cost Sharing)	2015	2016	2017	2018	2019
Proportion of Net Pension Liability	0.21478%	0.22348%	0.23212%	0.23783%	0.24676%
Proportionate Share of Net Pension Liability	$ 13,364,737	$ 15,339,447	$ 20,085,433	$ 23,586,276	$ 23,778,037
Covered Payroll	$ 8,397,700	$ 8,344,457	$ 9,191,925	$ 9,200,222	$ 10,029,811
Proportionate Share of Net Pension Liability as a % of Covered Payroll	**159.15%**	**183.83%**	**218.51%**	**256.37%**	**237.07%**
Plan Fiduciary's Net Position as a percentage of the Total Pension Liability	**81.42%**	**80.28%**	**74.06%**	**73.31%**	**75.26%**

Continued

Notes to Schedule:

The CalPERS discount rate was increased from 7.5% to 7.65% in FY 2016, decreased from 7.15% in FY2018 and 6.9% in FY2023.
The CalPERS mortality assumptions was adjusted in fiscal year 2023.

City of Rocklin

Schedule of Changes in Net Pension Liabilities, Net Pension Liabilities and Proportionate Shares (GASB 68)

June 30, 2024

Miscellaneous Plan (Agent-Multi Employer)	2020	2021	2022	2023	2024
Total Pension liability					
Service cost	$ 1,837,828	$ 1,864,754	$ 1,848,673	$ 2,016,032	$ 2,147,141
Interest	6,162,322	6,546,678	6,862,818	7,137,937	7,456,529
Changes of benefit terms	-	-	-	-	121,142
Diff. bet. expected and actual exper.	-	-	-	(294,254)	301,238
Changes of assumptions	1,694,787	1,147,218	184,084	3,599,971	-
Benefit payments	(3,623,752)	(3,946,715)	(4,385,151)	(4,886,808)	(5,162,471)
Net change in Total Pension Liability	6,071,185	5,611,935	4,510,424	7,572,878	4,863,579
Total Pension Liability - beginning	85,384,504	91,455,689	97,067,624	101,578,048	109,150,926
Total Pension Liability - ending	$ 91,455,689	$ 97,067,624	$ 101,578,048	$ 109,150,926	$ 114,014,505
Plan fiduciary net position					
Employer contributions	$ 2,863,892	$ 2,915,971	$ 6,432,032	$ 3,090,721	$ 4,768,135
Employee contributions	974,104	991,487	986,233	1,056,241	1,081,416
Net investment income	4,033,001	3,289,827	16,024,892	(6,626,820)	4,977,682
Benefit payments	(3,623,752)	(3,946,715)	(4,385,151)	(4,886,808)	(5,162,471)
Net plan to plan resource movement	-	-	-	-	-
Administrative expense	(43,788)	(92,429)	(68,649)	(54,639)	(59,042)
Other misc income (expense)	141	-	-	-	-
Net change in plan fiduciary net position	4,203,598	3,158,141	18,989,357	(7,421,305)	5,605,720
Plan fiduciary net position - beginning	61,360,414	65,564,012	68,722,153	87,711,510	80,290,205
Plan fiduciary net position - ending	$ 65,564,012	$ 68,722,153	$ 87,711,510	$ 80,290,205	$ 85,895,925
Net Pension Liability (NPL)	$ 25,891,677	$ 28,345,471	$ 13,866,538	$ 28,860,721	$ 28,118,580
Plan fiduciary net position as a percentage of the total Pension liability	71.69%	70.80%	86.35%	73.56%	75.34%
Covered payroll	$ 11,276,404	$ 11,546,463	$ 11,597,699	$ 11,404,973	$ 11,558,710
NPL as a percentage of covered payroll	229.61%	245.49%	119.56%	253.05%	243.27%

Safety Plan (Cost Sharing)	2020	2021	2022	2023	2024
Proportion of Net Pension Liability	0.25436%	0.26798%	0.27662%	0.27662%	0.31073%
Proportionate Share of Net Pension Liability	$ 26,063,854	$ 29,157,726	$ 14,960,301	$ 14,960,301	$ 38,764,891
Covered Payroll	$ 10,838,835	$ 11,354,811	$ 11,888,369	$ 11,720,404	$ 13,126,407
Proportionate Share of Net Pension Liability as a % of Covered Payroll	**240.47%**	**256.79%**	**125.84%**	**127.64%**	**295.32%**
Plan Fiduciary's Net Position as a percentage of the Total Pension Liability	**75.26%**	**75.10%**	**88.29%**	**76.68%**	**76.21%**

Concluded

City of Rocklin
Retiree Health Benefits
Schedule of Contributions for Other Postemployment Benefits
June 30, 2024

Fiscal Year Ended	**2018**	**2019**	**2020**	**2021**	**2022**	**2023**	**2024**
Actuarially determined contribution (ADC)	$ 3,621,000	$ 3,026,000	$ 3,010,383	$ 2,099,000	$ 2,149,878	$ 2,269,000	$ 1,897,543
Less: actual contribution in relation to ADC	(2,122,778)	(6,431,202)	(9,666,208)	(4,913,942)	(2,167,712)	(2,486,026)	(2,474,828)
Contribution deficiency (excess)	$ 1,498,222	$ (3,405,202)	$ (6,655,825)	$ (2,814,942)	$ (17,835)	$ (217,026)	$ (577,285)
Covered employee payroll	$ 21,465,000	$ 25,692,000	$ 24,916,556	$ 25,979,504	$ 26,758,889	$ 26,674,230	$ 26,461,995
Contrib. as a % of covered employee payroll	9.89%	25.03%	38.79%	18.91%	8.10%	9.32%	9.35%

Notes to Schedule:

Assumptions and Methods

Valuation Date:	June 30, 2022
Measurement Date:	June 30, 2022
Actuarial Cost Method:	Entry-Age Normal, Level % of pay
Amortization Period:	10 years
Asset Valuation Method:	Investment gains and losses spread over 5-year rolling period
Actuarial Assumptions:	
Discount Rate	6.25%
Inflation	2.50%
Salary Increases	2.75%
Healthcare Trend Rate	Non-Medicare - 8.5% for 2024, decreasing to an ultimate rate of 3.45% in 2076 Medicare (Non-Kaiser) - 7.5% for 2024, decreasing to an ultimate rate of 3.45% in 2076 Medicare (Kaiser) - 6.25% for 2024, decreasing to an ultimate rate of 3.45% in 2076
Investment Rate of Return	6.25%, Net of OPEB plan investment expenses, including inflation
Mortality	CalPERS 2000-2019 Experience Study
Retirement	Actives and Retirees currently covered: 100% Actives currently waived: 80% Retirees currently Waived: 10% elect at 65 Unrepresented & Hourly: 60%

Other Notes

GASB 75 requires a schedule of contributions for the last ten fiscal years, or for as many years as are available if less than ten years are available. GASB 75 was adopted as of June 30, 2018.

Changes in benefit terms: change of Miscellaneous Monthly City Cap from $1,093 to $1,200 in FY18.

Changes of assumptions: mortality improvement scale was updated to Scale MP-2018; Medical Plan at Retirement; Dependent Participation in FY18. Mortality improvement scale was updated to Scale MP-2019 in FY19. Mortality improvement scale was updated to Scale MP-2021 in FY23.

The following changes were made in FY23:
1) The discount rate was decreased .5%
2) Inflation was decreased .25%
3) Payroll growth was decreased .25%

Actuarially determined contribution rates are calculated as of June 30, one year prior to the end of the fiscal year in which contributions are reported.

Contributions were not based on a measure of pay.

City of Rocklin
Retiree Health Benefits
Schedule of Changes in Net OPEB Liability
June 30, 2024

Fiscal Year Ended	2018	2019	2020	2021	2022	2023	2024
Total OPEB liability							
Service cost	$ 1,097,000	$ 1,130,000	$ 1,317,810	$ 1,256,156	$ 1,347,227	$ 1,318,411	$ 1,354,667
Interest	2,054,000	2,162,000	2,362,150	2,434,371	2,561,898	2,602,649	2,674,222
Changes of benefit terms	-	713,000	-	-	-	-	-
Differences expected and actual experience	-	(458,000)	(602,200)	1,053,296	-	(3,709,136)	-
Changes of assumptions	-	909,000	(84,459)	(610,672)	-	117,734	-
Benefit payments	(1,550,000)	(1,617,000)	(1,748,000)	(1,975,408)	(1,264,905)	(2,162,422)	(2,061,828)
Actuarial adjustments	-	-	-	-	-	806,924	-
Net change in Total OPEB Liability	1,601,000	2,839,000	1,245,301	2,157,743	2,644,220	(1,025,840)	1,967,061
Total OPEB Liability - beginning	30,111,000	31,712,000	34,551,000	35,796,301	37,954,044	40,598,264	39,572,424
Total OPEB Liability - ending	$ 31,712,000	$ 34,551,000	$ 35,796,301	$ 37,954,044	$ 40,598,264	$ 39,572,424	$ 41,539,485
Plan fiduciary net position							
Employer contributions	$ 4,704,600	$ 2,122,778	$ 8,183,202	$ 9,666,208	$ 4,039,433	$ 2,167,712	$ 2,287,229
Net investment income	836,000	983,000	933,060	508,197	8,266,821	(5,403,647)	2,263,435
Benefit payments	(1,550,000)	(1,617,000)	(1,748,000)	(1,975,408)	(1,264,905)	(2,162,422)	(2,061,828)
Administrative expense	(4,000)	(23,000)	(7,159)	(16,353)	(16,958)	(15,516)	(30,262)
Net change in plan fiduciary net position	3,986,600	1,465,778	7,361,103	8,182,644	11,024,391	(5,409,338)	2,458,574
Plan fiduciary net position - beginning	8,343,400	12,330,000	13,795,778	21,156,881	29,339,525	40,363,916	34,954,578
Plan fiduciary net position - ending	$ 12,330,000	$ 13,795,778	$ 21,156,881	$ 29,339,525	$ 40,363,916	$ 34,954,578	$ 37,413,152
Net OPEB liability (asset)	$ 19,382,000	20,755,222	14,639,420	8,614,519	234,348	4,617,846	4,126,333
Plan fiduciary net position as a % of the total OPEB liability	38.88%	39.93%	59.10%	77.30%	99.42%	88.33%	90.07%
Covered Employee Payroll	$ 21,865,000	$ 21,465,000	$ 25,692,000	$ 24,916,556	$ 25,979,504	$ 25,960,321	$ 25,753,766
Net OPEB liability as a percentage of covered employee payroll	88.64%	96.69%	56.98%	34.57%	0.90%	17.79%	16.02%
Total OPEB liability as a percentage of covered employee payroll	145.04%	160.96%	139.33%	152.32%	156.27%	152.43%	161.29%

Other Notes

GASB 75 requires a schedule of contributions for the last ten fiscal years, or for as many years as are available if less than ten years are available. GASB 75 was adopted as of June 30, 2018.

Changes in benefit terms: change of Miscellaneous Monthly City Cap from $1,093 to $1,200 in FY18.

Changes of assumptions: mortality improvement scale was updated to Scale MP-2018; Medical Plan at Retirement; Dependent Participation in FY18. Mortality improvement scale was updated to Scale MP-2019 in FY19. Mortality improvement scale was updated to Scale MP-2021 in FY23.

The following changes were made in FY23:
1) The discount rate was decreased .5%
2) Inflation was decreased .25%
3) Payroll growth was decreased .25%

Actuarially determined contribution rates are calculated as of June 30, one year prior to the end of the fiscal year in which contributions are reported.

Contributions were not based on a measure of pay.

Actuarially determined contribution rates are calculated as of June 30, two years prior to the end of the fiscal year in which contributions are reported.

Contributions were not based on a measure of pay.

ROCKLIN

CALIFORNIA

SUPPLEMENTARY INFORMATION

This page intentionally left blank

City of Rocklin
Combining Balance Sheet
Nonmajor Governmental Funds
June 30, 2024
(With Comparative Totals for June 30, 2023)

	Total Special Revenue Funds	Total Capital Projects Funds	Total Permanent Funds	Debt Service Funds	Total Nonmajor Governmental Funds	
					2024	2023
ASSETS						
Cash and investments	$ 17,464,797	$ 13,277,388	$ -	$ 7,456	$ 30,749,641	$ 18,939,414
Restricted cash and investments	157,442	-	509,401	1,097,740	1,764,583	2,747,056
Receivables:						
Taxes	738,485	-	-	-	738,485	545,667
Intergovernmental	373,868	-	-	-	373,868	687,607
Other receivables	150,219	-	-	-	150,219	1,449
Loans receivable	318,986	-	-	-	318,986	318,986
Total assets	$ 19,203,797	$ 13,277,388	$ 509,401	$ 1,105,196	$ 34,095,782	$ 23,240,179
LIABILITIES, FUND BALANCES AND DEFERRED INFLOWS OF RESOURCES						
Liabilities:						
Accounts payable and accrued liabilities	$ 1,704,775	$ 105,252	$ -	$ -	$ 1,810,027	$ 1,226,957
Due to other funds	374,932	-	-	-	374,932	766,619
Unearned revenues	542,008	-	-	-	542,008	114,042
Total liabilities	2,621,715	105,252	-	-	2,726,967	2,107,618
DEFERRED INFLOWS OF RESOURCES						
Unavailable revenue	170,959	-	-	-	170,959	576,501
Fund Balances:						
Nonspendable:						
Endowments	-	-	491,455	-	491,455	491,455
Restricted	16,582,080	-	17,946	1,105,196	17,705,222	9,859,180
Committed	-	13,172,136	-	-	13,172,136	10,955,544
Unassigned (Deficit)	(170,957)	-	-	-	(170,957)	(750,119)
Total fund balances	16,411,123	13,172,136	509,401	1,105,196	31,197,856	20,556,060
Total liabilities, fund balances and deferred inflows of resources	$ 19,203,797	$ 13,277,388	$ 509,401	$ 1,105,196	$ 34,095,782	$ 23,240,179

City of Rocklin

Combining Statement of Revenues, Expenditures, and Changes in Fund Balances
Nonmajor Governmental Funds
For the Year Ended June 30, 2024
(With Comparative Totals for June 30, 2023)

	Total Special Revenue Funds	Total Capital Projects Funds	Total Permanent Funds	Debt Service Funds	Total Nonmajor Governmental Funds	
					2024	2023
REVENUES						
Taxes and assessments	$ 17,024,039	$ 1,327,244	$ -	$ -	$ 18,351,283	$ 15,198,304
License and permits	16,894	37,623	-	-	54,517	129,796
Fines and forfeitures	86,155	-	-	-	86,155	146,969
Intergovernmental	1,732,462	-	-	-	1,732,462	948,885
Charges for services	-	1,229,102	-	-	1,229,102	606,080
Use of money and property	322,964	393,184	19,628	29,291	765,067	97,931
Contributions and donations	-	792,565	-	-	792,565	1,752,919
Total Revenues	19,352,657	3,779,718	19,628	29,291	23,181,294	18,880,884
EXPENDITURES						
Current:						
General government	267,951	-	-	2,500	270,451	223,131
Public safety	292,220	2,626	-	-	294,846	461,261
Public works	6,302,375	59,359	-	-	6,361,734	7,714,930
Parks and recreation	2,600,689	62,627	-	-	2,663,316	2,354,760
Community development	237,455	-	-	-	237,455	100,126
Capital outlay	1,238,250	288,063	-	-	1,526,313	1,453,004
Debt service:						
Principal	-	516,934	-	797,623	1,314,557	1,326,650
Interest, fiscal charges and fees	-	39,279	-	257,966	297,245	339,802
Total Expenditures	10,938,940	968,888	-	1,058,089	12,965,917	13,973,664
Excess (Deficiency) of Revenues over Expenditures	8,413,717	2,810,830	19,628	(1,028,798)	10,215,377	4,907,220
OTHER FINANCING SOURCES (USES)						
Transfers in	17,229	500,000	-	531,610	1,048,839	535,195
Transfers out	(4,770,702)	(566,717)	(18,706)	-	(5,356,125)	(4,796,632)
Total Other Financing Sources (Uses)	(4,753,473)	(66,717)	(18,706)	531,610	(4,307,286)	(4,261,437)
Net Change in Fund Balances	3,660,244	2,744,113	922	(497,188)	5,908,091	645,783
Fund Balances Beginning	12,750,879	10,428,023	508,479	1,602,384	25,289,765	19,910,277
Fund Balances Ending	$ 16,411,123	$ 13,172,136	$ 509,401	$ 1,105,196	$ 31,197,856	$ 20,556,060

NONMAJOR SPECIAL REVENUE FUNDS

Fund Title	Fund Description
Gas Tax	Accounts for funds received and expended for construction and street maintenance purposes as defined in Sections 2105, 2106, 2107, and 2107.5 of the California Streets and Highways Code.
SB325 Sales Tax	Accounts for sales tax revenue collected in accordance with Senate Bill 325 to be used for repair and maintenance of streets.
SB1 Road Maintenance and Rehab. Act	Accounts for funds received and expended for City road maintenance projects in accordance with Senate Bill 1, Chapter 5, Statutes of 2017.
Low Carbon Transit Operations Program Fund	To provide assistance for transit agencies to reduce greenhouse gas emission and improve mobility.
Recreation Facilities Contributions	Accounts for revenues received for recreation facilities construction and improvements.
Lighting Maintenance District No. 1	Accounts for funds received to maintain and operate the respective lighting district.
Landscaping and Lighting Maintenance District No. 2	Accounts for funds received to maintain and operate the respective landscaping and lighting district.
Park Development and Maintenance Tax Fund	Enacted in 1998, and reenacted in 2009, to provide development, installation, servicing, maintenance, repair and operation of parks in the City of Rocklin.
Community Facilities District No. 1	Accounts for revenues to be used for respective community facilities district's operations for fire protection services.
Community Facilities District No. 5	Accounts for revenues to be used for respective community facilities district's operations and maintenance.
Community Facilities District No. 6	Accounts for revenues to be used for respective community facilities district's operations and maintenance.
Housing Rehabilitation	Accounts for funds received for the City's housing rehabilitation programs.
Asset Forfeiture	Accounts for funds received on forfeited assets to be used for Police services.
Traffic Safety/PD Grants	Accounts for funds received for traffic safety programs and police grants.
CASp Certification and Training Fund	Assembly Bill 1379, effective January 1, 2018, increased the SB1186 fee charged to all business licenses to increase to $4 and required the fee to be deposited into its own fund. The City retains 90% for Certified Access Specialist program training, and remits 10% to the State.
CDBG HUD Entitlement	Accounts for entitlement grants and expenditures from CDBG federal awards.
DOF CARES Act	Accounts for funds received from the Federal Coronavirus Aid, Relief, and Economic Security Act through the Department of Finance to be used to respond to or mitigate COVID-19.
Grants and Other Reimbursables	Accounts for grants and other reimbursable costs.
Supplemental Law Enforcement Grant	Accounts for funds received to be used for public safety purposes.
Costco Settlement	Funds are to be used in accordance with the Settlement Agreement between Costco, Town of Loomis, and City of Rocklin, dated October 2022.
OPIOID Settlement	Funds are for opioid remediation as allowed by Section VI(B)(2) of the Opioid Settlement Agreement and amendments between California cities and counties with Janssen Pharmaceuticals and its parent company Johnson & Johnson, and its distributors, dated July 21, 2021.

City of Rocklin

Combining Balance Sheet
Special Revenue Nonmajor Governmental Funds
June 30, 2024
(With Comparative Totals for June 30, 2023)

	Gas Tax	SB1 Road Maintenance & Rehab. Act	Recreation Facilities Contributions
ASSETS			
Cash and investments	$ 1,467,033	$ 2,396,727	$ 2,263
Restricted cash and investments	-	-	-
Receivables:			
Taxes	169,108	320,622	-
Intergovernmental	-	-	-
Other receivables	-	-	-
Prepaid items	-	-	-
Loans receivable	-	-	-
Total assets	$ 1,636,141	$ 2,717,349	$ 2,263
LIABILITIES, FUND BALANCES AND DEFERRED INFLOWS OF RESOURCES			
Liabilities:			
Accounts payable and accrued liabilities	$ 29,500	$ 640,814	$ -
Due to other funds	-	-	-
Unearned revenues	-	-	-
Total liabilities	29,500	640,814	-
DEFERRED INFLOWS OF RESOURCES			
Unavailable revenue	-	-	-
Fund Balances:			
Restricted	1,606,641	2,076,535	2,263
Unassigned (Deficit)	-	-	-
Total fund balances	1,606,641	2,076,535	2,263
Total liabilities, fund balances and deferred inflows of resources	$ 1,636,141	$ 2,717,349	$ 2,263

Continued

City of Rocklin

Combining Balance Sheet
Special Revenue Nonmajor Governmental Funds
June 30, 2024
(With Comparative Totals for June 30, 2023)

	Lighting Maintenance District No. 1	Landscaping and Lighting Maintenance District No. 2	Park Development and Maintenance Tax Fund
ASSETS			
Cash and investments	$ 26,545	$ 1,570,147	$ -
Restricted cash and investments	-	-	-
Receivables:			
Taxes	8,493	132,482	32,953
Intergovernmental	-	-	-
Other receivables	-	1,340	-
Prepaid items	-	-	-
Loans receivable	-	-	-
Total assets	$ 35,038	$ 1,703,969	$ 32,953
LIABILITIES, FUND BALANCES AND DEFERRED INFLOWS OF RESOURCES			
Liabilities:			
Accounts payable and accrued liabilities	$ 35,038	$ 192,234	$ -
Due to other funds	-	-	32,953
Unearned revenues	-	1,340	-
Total liabilities	35,038	193,574	32,953
DEFERRED INFLOWS OF RESOURCES			
Unavailable revenue	-	-	-
Fund Balances:			
Restricted	-	1,510,395	-
Unassigned (Deficit)	-	-	-
Total fund balances	-	1,510,395	-
Total liabilities, fund balances and deferred inflows of resources	$ 35,038	$ 1,703,969	$ 32,953

Continued

City of Rocklin

Combining Balance Sheet
Special Revenue Nonmajor Governmental Funds
June 30, 2024
(With Comparative Totals for June 30, 2023)

	Community Facilities District No. 1	Community Facilities District No. 5	Community Facilities District No. 6
ASSETS			
Cash and investments	$ -	$ 6,367,224	$ 410,310
Restricted cash and investments	-	-	-
Receivables:			
Taxes	21,284	50,246	3,297
Intergovernmental	-	-	-
Other receivables	-	1,330	-
Prepaid items	-	-	-
Loans receivable	-	-	-
Total assets	$ 21,284	$ 6,418,800	$ 413,607
LIABILITIES, FUND BALANCES AND DEFERRED INFLOWS OF RESOURCES			
Liabilities:			
Accounts payable and accrued liabilities	$ -	$ 560,703	$ 20,615
Due to other funds	21,284	-	-
Unearned revenues	-	-	-
Total liabilities	21,284	560,703	20,615
DEFERRED INFLOWS OF RESOURCES			
Unavailable revenue	-	-	-
Fund Balances:			
Restricted	-	5,858,097	392,992
Unassigned (Deficit)	-	-	-
Total fund balances	-	5,858,097	392,992
Total liabilities, fund balances and deferred inflows of resources	$ 21,284	$ 6,418,800	$ 413,607

Continued

City of Rocklin

Combining Balance Sheet
Special Revenue Nonmajor Governmental Funds
June 30, 2024
(With Comparative Totals for June 30, 2023)

	Housing Rehabilitation	Asset Forfeiture	Traffic Safety/PD Grants
ASSETS			
Cash and investments	$ 368,865	$ 598,558	$ -
Restricted cash and investments	157,442	-	-
Receivables:			
Taxes	-	-	-
Intergovernmental	-	-	263,958
Other receivables	-	4,978	21,540
Prepaid items	-	-	-
Loans receivable	318,986	-	-
Total assets	$ 845,293	$ 603,536	$ 285,498
LIABILITIES, FUND BALANCES AND DEFERRED INFLOWS OF RESOURCES			
Liabilities:			
Accounts payable and accrued liabilities	$ -	$ 176,757	$ 7,795
Due to other funds	-	-	261,660
Unearned revenues	-	-	16,041
Total liabilities	-	176,757	285,496
DEFERRED INFLOWS OF RESOURCES			
Unavailable revenue	-	-	31,808
Fund Balances:			
Restricted	845,293	426,779	-
Unassigned (Deficit)	-	-	(31,806)
Total fund balances	845,293	426,779	(31,806)
Total liabilities, fund balances and deferred inflows of resources	$ 845,293	$ 603,536	$ 285,498

Continued

City of Rocklin

Combining Balance Sheet
Special Revenue Nonmajor Governmental Funds
June 30, 2024
(With Comparative Totals for June 30, 2023)

	CASp Certification and Training Fund	CDBG HUD Entitlement	DOF CARES Act
ASSETS			
Cash and investments	$ 100,006	$ -	$ -
Restricted cash and investments	-	-	-
Receivables:			
Taxes	-	-	-
Intergovernmental	-	81,629	10,161
Other receivables	-	-	-
Prepaid items	-	-	-
Loans receivable	-	-	-
Total assets	$ 100,006	$ 81,629	$ 10,161
LIABILITIES, FUND BALANCES AND DEFERRED INFLOWS OF RESOURCES			
Liabilities:			
Accounts payable and accrued liabilities	$ 704	$ 22,594	$ 10,161
Due to other funds	-	59,035	-
Unearned revenues	-	-	-
Total liabilities	704	81,629	10,161
DEFERRED INFLOWS OF RESOURCES			
Unavailable revenue	-	-	-
Fund Balances:			
Restricted	99,302	-	-
Unassigned (Deficit)	-	-	-
Total fund balances	99,302	-	-
Total liabilities, fund balances and deferred inflows of resources	$ 100,006	$ 81,629	$ 10,161

Continued

City of Rocklin

Combining Balance Sheet
Special Revenue Nonmajor Governmental Funds
June 30, 2024
(With Comparative Totals for June 30, 2023)

	Grants & Other Reimbursables	Supplemental Law Enforcement Grant	Costco Settlement
ASSETS			
Cash and investments	$ 329,245	$ -	$ 3,755,224
Restricted cash and investments	-	-	-
Receivables:			
Taxes	-	-	-
Intergovernmental	18,120	-	-
Other receivables	121,031	-	-
Prepaid items	-	-	-
Loans receivable	-	-	-
Total assets	$ 468,396	$ -	$ 3,755,224
LIABILITIES, FUND BALANCES AND DEFERRED INFLOWS OF RESOURCES			
Liabilities:			
Accounts payable and accrued liabilities	$ 7,860	$ -	$ -
Due to other funds	-	-	-
Unearned revenues	460,536	-	-
Total liabilities	468,396	-	-
DEFERRED INFLOWS OF RESOURCES			
Unavailable revenue	139,151	-	-
Fund Balances:			
Restricted	-	-	3,755,224
Unassigned (Deficit)	(139,151)	-	-
Total fund balances	(139,151)	-	3,755,224
Total liabilities, fund balances and deferred inflows of resources	$ 468,396	$ -	$ 3,755,224

Continued

City of Rocklin

Combining Balance Sheet
Special Revenue Nonmajor Governmental Funds
June 30, 2024
(With Comparative Totals for June 30, 2023)

	OPIOID Settlement	Total Special Revenue Nonmajor Governmental Funds 2024	2023
ASSETS			
Cash and investments	$ 72,650	$ 17,464,797	$ 14,571,770
Restricted cash and investments	-	157,442	156,556
Receivables:			
Taxes	-	738,485	718,763
Intergovernmental	-	373,868	1,079,787
Other receivables	-	150,219	1,449
Prepaid items	-	-	578
Loans receivable	-	318,986	318,986
Total assets	$ 72,650	$ 19,203,797	$ 16,847,889
LIABILITIES, FUND BALANCES AND DEFERRED INFLOWS OF RESOURCES			
Liabilities:			
Accounts payable and accrued liabilities	$ -	$ 1,704,775	$ 2,662,083
Due to other funds	-	374,932	575,092
Unearned revenues	64,091	542,008	277,964
Total liabilities	64,091	2,621,715	3,515,139
DEFERRED INFLOWS OF RESOURCES			
Unavailable revenue	-	170,959	581,871
Fund Balances:			
Restricted	8,559	16,582,080	13,332,748
Unassigned (Deficit)	-	(170,957)	(581,869)
Total fund balances	8,559	16,411,123	12,750,879
Total liabilities, fund balances and deferred inflows of resources	$ 72,650	$ 19,203,797	$ 16,847,889

Concluded

City of Rocklin

Statement of Revenues, Expenditures, and Changes in Fund Balances
Special Revenue Nonmajor Governmental Funds
For the Year Ended June 30, 2024
(With Comparative Totals for June 30, 2023)

	Gas Tax	SB1 Road Maintenance & Rehab. Act	Recreation Facilities Contributions
REVENUES			
Taxes and assessments	$ 1,957,028	$ 1,839,713	$ -
Licenses and permits	-	-	-
Fines and forfeitures	-	-	-
Intergovernmental	-	-	-
Use of money and property	38,414	55,411	78
Other revenues	-	-	-
Total Revenues	1,995,442	1,895,124	78
EXPENDITURES			
Current:			
General government	35,136	-	-
Public safety	-	-	-
Public works	665,406	-	-
Parks and recreation	-	-	-
Community development	88,753	-	-
Capital outlay	151,617	684,173	-
Total Expenditures	940,912	684,173	-
Excess (Deficiency) of Revenues over Expenditures	1,054,530	1,210,951	78
OTHER FINANCING SOURCES (USES)			
Settlements and recoveries	-	-	-
Transfers in	-	-	-
Transfers out	(136,705)	-	-
Total Other Financing Sources (Uses)	(136,705)	-	-
Net Change in Fund Balances	917,825	1,210,951	78
Fund Balances Beginning	688,816	865,584	2,185
Fund Balances Ending	$ 1,606,641	$ 2,076,535	$ 2,263

Continued

City of Rocklin

Statement of Revenues, Expenditures, and Changes in Fund Balances
Special Revenue Nonmajor Governmental Funds
For the Year Ended June 30, 2024
(With Comparative Totals for June 30, 2023)

	Lighting Maintenance District No. 1	Landscaping and Lighting Maintenance District No. 2	Park Development and Maintenance Tax Fund
REVENUES			
Taxes and assessments	$ 247,697	$ 2,670,515	$ 659,060
Licenses and permits	-	-	-
Fines and forfeitures	-	-	-
Intergovernmental	-	3,120	-
Use of money and property	-	46,463	-
Other revenues	-	-	-
Total Revenues	247,697	2,720,098	659,060
EXPENDITURES			
Current:			
General government	2,518	59,329	-
Public safety	-	-	-
Public works	245,179	2,351,749	-
Parks and recreation	-	-	6,591
Community development	-	22,685	-
Capital outlay	-	-	-
Total Expenditures	247,697	2,433,763	6,591
Excess (Deficiency) of Revenues over Expenditures	-	286,335	652,469
OTHER FINANCING SOURCES (USES)			
Settlements and recoveries	-	-	-
Transfers in	-	-	-
Transfers out	-	(334,887)	(652,469)
Total Other Financing Sources (Uses)	-	(334,887)	(652,469)
Net Change in Fund Balances	-	(48,552)	-
Fund Balances Beginning	-	1,558,947	-
Fund Balances Ending	$ -	$ 1,510,395	$ -

Continued

City of Rocklin

Statement of Revenues, Expenditures, and Changes in Fund Balances
Special Revenue Nonmajor Governmental Funds
For the Year Ended June 30, 2024
(With Comparative Totals for June 30, 2023)

	Community Facilities District No. 1	Community Facilities District No. 5	Community Facilities District No. 6
REVENUES			
Taxes and assessments	$ 2,371,164	$ 6,915,789	$ 363,073
Licenses and permits	-	-	-
Fines and forfeitures	-	-	-
Intergovernmental	-	30,817	-
Use of money and property	-	162,516	10,548
Other revenues	-	-	-
Total Revenues	2,371,164	7,109,122	373,621
EXPENDITURES			
Current:			
General government	-	157,039	11,522
Public safety	23,657	-	-
Public works	-	2,522,381	227,166
Parks and recreation	-	2,594,098	-
Community development	-	34,019	11,336
Capital outlay	-	-	-
Total Expenditures	23,657	5,307,537	250,024
Excess (Deficiency) of Revenues over Expenditures	2,347,507	1,801,585	123,597
OTHER FINANCING SOURCES (USES)			
Settlements and recoveries	-	-	-
Transfers in	-	16,106	-
Transfers out	(2,347,507)	(764,123)	(34,503)
Total Other Financing Sources (Uses)	(2,347,507)	(748,017)	(34,503)
Net Change in Fund Balances	-	1,053,568	89,094
Fund Balances Beginning	-	4,804,529	303,898
Fund Balances Ending	$ -	$ 5,858,097	$ 392,992

Continued

City of Rocklin

Statement of Revenues, Expenditures, and Changes in Fund Balances
Special Revenue Nonmajor Governmental Funds
For the Year Ended June 30, 2024
(With Comparative Totals for June 30, 2023)

	Housing Rehabilitation	Asset Forfeiture	Traffic Safety/PD Grants
REVENUES			
Taxes and assessments	$ -	$ -	$ -
Licenses and permits	-	-	-
Fines and forfeitures	-	86,155	-
Intergovernmental	-	-	476,121
Use of money and property	1,686	628	-
Other revenues	-	-	-
Total Revenues	1,686	86,783	476,121
EXPENDITURES			
Current:			
General government	-	-	564
Public safety	-	85,372	147,915
Public works	-	-	-
Parks and recreation	-	-	-
Community development	-	-	-
Capital outlay	-	-	248,504
Total Expenditures	-	85,372	396,983
Excess (Deficiency) of Revenues over Expenditures	1,686	1,411	79,138
OTHER FINANCING SOURCES (USES)			
Settlements and recoveries	-	-	-
Transfers in	-	-	1,123
Transfers out	-	-	(543)
Total Other Financing Sources (Uses)	-	-	580
Net Change in Fund Balances	1,686	1,411	79,718
Fund Balances Beginning	843,607	425,368	(111,524)
Fund Balances Ending	$ 845,293	$ 426,779	$ (31,806)

Continued

City of Rocklin

Statement of Revenues, Expenditures, and Changes in Fund Balances
Special Revenue Nonmajor Governmental Funds
For the Year Ended June 30, 2024
(With Comparative Totals for June 30, 2023)

	CASp Certification and Training Fund	CDBG HUD Entitlement	DOF CARES Act
REVENUES			
Taxes and assessments	$ -	$ -	$ -
Licenses and permits	16,894	-	-
Fines and forfeitures	-	-	-
Intergovernmental	-	297,229	40,080
Use of money and property	-	-	-
Other revenues	-	-	-
Total Revenues	16,894	297,229	40,080
EXPENDITURES			
Current:			
General government	843	1,000	-
Public safety	-	-	-
Public works	-	196,612	-
Parks and recreation	-	-	-
Community development	-	40,582	40,080
Capital outlay	-	-	-
Total Expenditures	843	238,194	40,080
Excess (Deficiency) of Revenues over Expenditures	16,051	59,035	-
OTHER FINANCING SOURCES (USES)			
Settlements and recoveries	-	-	-
Transfers in	-	-	-
Transfers out	-	(59,035)	-
Total Other Financing Sources (Uses)	-	(59,035)	-
Net Change in Fund Balances	16,051	-	-
Fund Balances Beginning	83,251	-	-
Fund Balances Ending	$ 99,302	$ -	$ -

Continued

City of Rocklin

Statement of Revenues, Expenditures, and Changes in Fund Balances
Special Revenue Nonmajor Governmental Funds
For the Year Ended June 30, 2024
(With Comparative Totals for June 30, 2023)

	Grants & Other Reimbursables	Supplemental Law Enforcement Grant	Costco Settlement
REVENUES			
Taxes and assessments	$ -	$ -	$ -
Licenses and permits	-	-	-
Fines and forfeitures	-	-	-
Intergovernmental	679,062	206,033	-
Use of money and property	-	-	-
Other revenues	-	-	-
Total Revenues	679,062	206,033	-
EXPENDITURES			
Current:			
General government	-	-	-
Public safety	35,276	-	-
Public works	93,882	-	-
Parks and recreation	-	-	-
Community development	-	-	-
Capital outlay	153,956	-	-
Total Expenditures	283,114	-	-
Excess (Deficiency) of Revenues over Expenditures	395,948	206,033	-
OTHER FINANCING SOURCES (USES)			
Settlements and recoveries	-	-	-
Transfers in	-	-	-
Transfers out	(64,754)	(206,033)	-
Total Other Financing Sources (Uses)	(64,754)	(206,033)	-
Net Change in Fund Balances	331,194	-	-
Fund Balances Beginning	(470,345)	-	3,755,224
Fund Balances Ending	$ (139,151)	$ -	$ 3,755,224

Continued

City of Rocklin

Statement of Revenues, Expenditures, and Changes in Fund Balances
Special Revenue Nonmajor Governmental Funds
For the Year Ended June 30, 2024
(With Comparative Totals for June 30, 2023)

	OPIOD Settlement	Total Special Revenue Nonmajor Governmental Funds 2024	2023
REVENUES			
Taxes and assessments	$ -	$ 17,024,039	$ 16,413,785
Licenses and permits	-	16,894	16,851
Fines and forfeitures	-	86,155	101,111
Intergovernmental	-	1,732,462	1,258,537
Use of money and property	7,220	322,964	129,372
Other revenues	170,143	170,143	-
Total Revenues	177,363	19,352,657	17,919,656
EXPENDITURES			
Current:			
General government	-	267,951	222,655
Public safety	-	292,220	405,651
Public works	-	6,302,375	6,655,207
Parks and recreation	-	2,600,689	2,344,954
Community development	-	237,455	381,263
Capital outlay	-	1,238,250	1,502,286
Total Expenditures	-	10,938,940	11,512,016
Excess (Deficiency) of Revenues over Expenditures	177,363	8,413,717	6,407,640
OTHER FINANCING SOURCES (USES)			
Settlements and recoveries	-	-	3,755,224
Transfers in	-	17,229	19,914
Transfers out	(170,143)	(4,770,702)	(4,607,403)
Total Other Financing Sources (Uses)	(170,143)	(4,753,473)	(832,265)
Net Change in Fund Balances	7,220	3,660,244	5,575,375
Fund Balances Beginning	1,339	12,750,879	7,175,504
Fund Balances Ending	$ 8,559	$ 16,411,123	$ 12,750,879

Concluded

City of Rocklin

Schedule of Revenues, Expenditures, and Changes in Fund Balances
Budget and Actual (GAAP Basis)
Special Revenue Nonmajor Governmental Funds
For the Year Ended June 30, 2024

	Gas Tax			
	Budgeted Amounts		Actual Amounts	Variance with Final Budget Positive (Negative)
	Original	Final		
REVENUES				
Taxes and assessments	$ 2,053,400	$ 2,053,400	$ 1,957,028	$ (96,372)
Licenses and permits	-	-	-	-
Fines and forfeitures	-	-	-	-
Intergovernmental	-	-	-	-
Use of money and property	16,900	16,900	38,414	21,514
Other revenues	-	-	-	-
Total Revenues	2,070,300	2,070,300	1,995,442	(74,858)
EXPENDITURES				
Current:				
General government	55,400	55,400	35,136	20,264
Public safety	-	-	-	-
Public works	694,400	694,400	665,406	28,994
Parks and recreation	-	-	-	-
Community development	98,400	98,400	88,753	9,647
Capital outlay	12,700	359,889	151,617	208,272
Total Expenditures	860,900	1,208,089	940,912	267,177
Excess (Deficiency) of Revenues over Expenditures	1,209,400	862,211	1,054,530	192,319
OTHER FINANCING SOURCES (USES)				
Settlements and recoveries	-	-	-	-
Transfers in	-	-	-	-
Transfers out	(137,900)	(137,900)	(136,705)	1,195
Total Other Financing Sources (Uses)	(137,900)	(137,900)	(136,705)	1,195
Net Change in Fund Balances	1,071,500	724,311	917,825	193,514
Fund Balances Beginning	688,816	688,816	688,816	-
Fund Balances Ending	$ 1,760,316	$ 1,413,127	$ 1,606,641	$ 193,514

Continued

City of Rocklin

Schedule of Revenues, Expenditures, and Changes in Fund Balances
Budget and Actual (GAAP Basis)
Special Revenue Nonmajor Governmental Funds
For the Year Ended June 30, 2024

	SB1 Road Maintenance & Rehab. Act			
	Budgeted Amounts			Variance with Final Budget
	Original	Final	Actual Amounts	Positive (Negative)
REVENUES				
Taxes and assessments	$ 1,771,500	$ 1,771,500	$ 1,839,713	$ 68,213
Licenses and permits	-	-	-	-
Fines and forfeitures	-	-	-	-
Intergovernmental	-	-	-	-
Use of money and property	27,800	27,800	55,411	27,611
Other revenues	-	-	-	-
Total Revenues	1,799,300	1,799,300	1,895,124	95,824
EXPENDITURES				
Current:				
General government	-	-	-	-
Public safety	-	-	-	-
Public works	-	-	-	-
Parks and recreation	-	-	-	-
Community development	-	-	-	-
Capital outlay	702,800	792,531	684,173	108,358
Total Expenditures	702,800	792,531	684,173	108,358
Excess (Deficiency) of Revenues over Expenditures	1,096,500	1,006,769	1,210,951	204,182
OTHER FINANCING SOURCES (USES)				
Settlements and recoveries	-	-	-	-
Transfers in	-	-	-	-
Transfers out	(26,800)	(26,800)	-	26,800
Total Other Financing Sources (Uses)	(26,800)	(26,800)	-	26,800
Net Change in Fund Balances	1,069,700	979,969	1,210,951	230,982
Fund Balances Beginning	865,584	865,584	865,584	-
Fund Balances Ending	$ 1,935,284	$ 1,845,553	$ 2,076,535	$ 230,982

Continued

City of Rocklin

Schedule of Revenues, Expenditures, and Changes in Fund Balances
Budget and Actual (GAAP Basis)
Special Revenue Nonmajor Governmental Funds
For the Year Ended June 30, 2024

	Recreation Facilities Contributions			
	Budgeted Amounts		Actual Amounts	Variance with Final Budget Positive (Negative)
	Original	Final		
REVENUES				
Taxes and assessments	$ -	$ -	$ -	$ -
Licenses and permits	-	-	-	-
Fines and forfeitures	-	-	-	-
Intergovernmental	-	-	-	-
Use of money and property	-	-	78	78
Other revenues	-	-	-	-
Total Revenues	-	-	78	78
EXPENDITURES				
Current:				
General government	-	-	-	-
Public safety	-	-	-	-
Public works	-	-	-	-
Parks and recreation	-	-	-	-
Community development	-	-	-	-
Capital outlay	-	-	-	-
Total Expenditures	-	-	-	-
Excess (Deficiency) of Revenues over Expenditures	-	-	78	78
OTHER FINANCING SOURCES (USES)				
Settlements and recoveries	-	-	-	-
Transfers in	-	-	-	-
Transfers out	-	-	-	-
Total Other Financing Sources (Uses)	-	-	-	-
Net Change in Fund Balances	-	-	78	78
Fund Balances Beginning	2,185	2,185	2,185	-
Fund Balances Ending	$ 2,185	$ 2,185	$ 2,263	$ 78

Continued

City of Rocklin

Schedule of Revenues, Expenditures, and Changes in Fund Balances
Budget and Actual (GAAP Basis)
Special Revenue Nonmajor Governmental Funds
For the Year Ended June 30, 2024

	Lighting Maintenance District No. 1			
	Budgeted Amounts		Actual Amounts	Variance with Final Budget Positive (Negative)
	Original	Final		
REVENUES				
Taxes and assessments	$ 252,400	$ 252,400	$ 247,697	$ (4,703)
Licenses and permits	-	-	-	-
Fines and forfeitures	-	-	-	-
Intergovernmental	-	-	-	-
Use of money and property	-	-	-	-
Other revenues	-	-	-	-
Total Revenues	252,400	252,400	247,697	(4,703)
EXPENDITURES				
Current:				
General government	18,400	18,400	2,518	15,882
Public safety	-	-	-	-
Public works	231,800	231,800	245,179	(13,379)
Parks and recreation	-	-	-	-
Community development	-	-	-	-
Capital outlay	-	2,600	-	2,600
Total Expenditures	250,200	252,800	247,697	5,103
Excess (Deficiency) of Revenues over Expenditures	2,200	(400)	-	400
OTHER FINANCING SOURCES (USES)				
Settlements and recoveries	-	-	-	-
Transfers in	-	-	-	-
Transfers out	(2,200)	(2,200)	-	2,200
Total Other Financing Sources (Uses)	(2,200)	(2,200)	-	2,200
Net Change in Fund Balances	-	(2,600)	-	2,600
Fund Balances Beginning	-	-	-	-
Fund Balances Ending	$ -	$ (2,600)	$ -	$ 2,600

Continued

City of Rocklin

Schedule of Revenues, Expenditures, and Changes in Fund Balances
Budget and Actual (GAAP Basis)
Special Revenue Nonmajor Governmental Funds
For the Year Ended June 30, 2024

	Landscaping and Lighting Maintenance District No. 2			
	Budgeted Amounts			Variance with Final Budget
	Original	Final	Actual Amounts	Positive (Negative)
REVENUES				
Taxes and assessments	$ 2,684,700	$ 2,684,700	$ 2,670,515	$ (14,185)
Licenses and permits	-	-	-	-
Fines and forfeitures	-	-	-	-
Intergovernmental	-	-	3,120	3,120
Use of money and property	32,900	32,900	46,463	13,563
Other revenues	-	-	-	-
Total Revenues	2,717,600	2,717,600	2,720,098	2,498
EXPENDITURES				
Current:				
General government	56,300	56,300	59,329	(3,029)
Public safety	-	-	-	-
Public works	2,400,300	2,400,300	2,351,749	48,551
Parks and recreation	-	-	-	-
Community development	33,500	33,500	22,685	10,815
Capital outlay	25,300	54,500	-	54,500
Total Expenditures	2,515,400	2,544,600	2,433,763	110,837
Excess (Deficiency) of Revenues over Expenditures	202,200	173,000	286,335	113,335
OTHER FINANCING SOURCES (USES)				
Settlements and recoveries	-	-	-	-
Transfers in	-	-	-	-
Transfers out	(316,100)	(316,100)	(334,887)	(18,787)
Total Other Financing Sources (Uses)	(316,100)	(316,100)	(334,887)	(18,787)
Net Change in Fund Balances	(113,900)	(143,100)	(48,552)	94,548
Fund Balances Beginning	1,558,947	1,558,947	1,558,947	-
Fund Balances Ending	$ 1,445,047	$ 1,415,847	$ 1,510,395	$ 94,548

Continued

City of Rocklin

Schedule of Revenues, Expenditures, and Changes in Fund Balances
Budget and Actual (GAAP Basis)
Special Revenue Nonmajor Governmental Funds
For the Year Ended June 30, 2024

	Park Development and Maintenance Tax Fund			
	Budgeted Amounts		Actual Amounts	Variance with Final Budget Positive (Negative)
	Original	Final		
REVENUES				
Taxes and assessments	$ 653,200	$ 653,200	$ 659,060	$ 5,860
Licenses and permits	-	-	-	-
Fines and forfeitures	-	-	-	-
Intergovernmental	-	-	-	-
Use of money and property	-	-	-	-
Other revenues	-	-	-	-
Total Revenues	653,200	653,200	659,060	5,860
EXPENDITURES				
Current:				
General government	-	-	-	-
Public safety	-	-	-	-
Public works	-	-	-	-
Parks and recreation	6,500	6,500	6,591	(91)
Community development	-	-	-	-
Capital outlay	-	-	-	-
Total Expenditures	6,500	6,500	6,591	(91)
Excess (Deficiency) of Revenues over Expenditures	646,700	646,700	652,469	5,769
OTHER FINANCING SOURCES (USES)				
Settlements and recoveries	-	-	-	-
Transfers in	-	-	-	-
Transfers out	(646,700)	(646,700)	(652,469)	(5,769)
Total Other Financing Sources (Uses)	(646,700)	(646,700)	(652,469)	(5,769)
Net Change in Fund Balances	-	-	-	-
Fund Balances Beginning	-	-	-	-
Fund Balances Ending	$ -	$ -	$ -	$ -

Continued

City of Rocklin

Schedule of Revenues, Expenditures, and Changes in Fund Balances
Budget and Actual (GAAP Basis)
Special Revenue Nonmajor Governmental Funds
For the Year Ended June 30, 2024

	Community Facilities District No. 1			
	Budgeted Amounts			Variance with Final Budget
	Original	Final	Actual Amounts	Positive (Negative)
REVENUES				
Taxes and assessments	$ 2,284,300	$ 2,284,300	$ 2,371,164	$ 86,864
Licenses and permits	-	-	-	-
Fines and forfeitures	-	-	-	-
Intergovernmental	-	-	-	-
Use of money and property	-	-	-	-
Other revenues	-	-	-	-
Total Revenues	2,284,300	2,284,300	2,371,164	86,864
EXPENDITURES				
Current:				
General government	-	-	-	-
Public safety	22,800	22,800	23,657	(857)
Public works	-	-	-	-
Parks and recreation	-	-	-	-
Community development	-	-	-	-
Capital outlay	-	-	-	-
Total Expenditures	22,800	22,800	23,657	(857)
Excess (Deficiency) of Revenues over Expenditures	2,261,500	2,261,500	2,347,507	86,007
OTHER FINANCING SOURCES (USES)				
Settlements and recoveries	-	-	-	-
Transfers in	-	-	-	-
Transfers out	(2,261,500)	(2,261,500)	(2,347,507)	(86,007)
Total Other Financing Sources (Uses)	(2,261,500)	(2,261,500)	(2,347,507)	(86,007)
Net Change in Fund Balances	-	-	-	-
Fund Balances Beginning	-	-	-	-
Fund Balances Ending	$ -	$ -	$ -	$ -

Continued

City of Rocklin

Schedule of Revenues, Expenditures, and Changes in Fund Balances
Budget and Actual (GAAP Basis)
Special Revenue Nonmajor Governmental Funds
For the Year Ended June 30, 2024

	Community Facilities District No. 5			
	Budgeted Amounts			Variance with Final Budget
	Original	Final	Actual Amounts	Positive (Negative)
REVENUES				
Taxes and assessments	$ 6,997,700	$ 6,997,700	$ 6,915,789	$ (81,911)
Licenses and permits	-	-	-	-
Fines and forfeitures	-	-	-	-
Intergovernmental	-	-	30,817	30,817
Use of money and property	139,500	139,500	162,516	23,016
Other revenues	-	-	-	-
Total Revenues	7,137,200	7,137,200	7,109,122	(28,078)
EXPENDITURES				
Current:				
General government	145,100	145,100	157,039	(11,939)
Public safety	-	-	-	-
Public works	2,537,300	2,537,300	2,522,381	14,919
Parks and recreation	2,646,300	2,646,300	2,594,098	52,202
Community development	50,500	50,500	34,019	16,481
Capital outlay	118,400	213,100	-	213,100
Total Expenditures	5,497,600	5,592,300	5,307,537	284,763
Excess (Deficiency) of Revenues over Expenditures	1,639,600	1,544,900	1,801,585	256,685
OTHER FINANCING SOURCES (USES)				
Settlements and recoveries	-	-	-	-
Transfers in	11,500	11,500	16,106	4,606
Transfers out	(725,100)	(725,100)	(764,123)	(39,023)
Total Other Financing Sources (Uses)	(713,600)	(713,600)	(748,017)	(34,417)
Net Change in Fund Balances	926,000	831,300	1,053,568	222,268
Fund Balances Beginning	4,804,529	4,804,529	4,804,529	-
Fund Balances Ending	$ 5,730,529	$ 5,635,829	$ 5,858,097	$ 222,268

Continued

City of Rocklin

Schedule of Revenues, Expenditures, and Changes in Fund Balances
Budget and Actual (GAAP Basis)
Special Revenue Nonmajor Governmental Funds
For the Year Ended June 30, 2024

	Community Facilities District No. 6			
	Budgeted Amounts			Variance with Final Budget
	Original	Final	Actual Amounts	Positive (Negative)
REVENUES				
Taxes and assessments	$ 351,800	$ 351,800	$ 363,073	$ 11,273
Licenses and permits	-	-	-	-
Fines and forfeitures	-	-	-	-
Intergovernmental	-	-	-	-
Use of money and property	6,200	6,200	10,548	4,348
Other revenues	-	-	-	-
Total Revenues	358,000	358,000	373,621	15,621
EXPENDITURES				
Current:				
General government	12,000	12,000	11,522	478
Public safety	-	-	-	-
Public works	310,500	310,500	227,166	83,334
Parks and recreation	-	-	-	-
Community development	16,800	16,800	11,336	5,464
Capital outlay	-	3,800	-	3,800
Total Expenditures	339,300	343,100	250,024	93,076
Excess (Deficiency) of Revenues over Expenditures	18,700	14,900	123,597	108,697
OTHER FINANCING SOURCES (USES)				
Settlements and recoveries	-	-	-	-
Transfers in	-	-	-	-
Transfers out	(42,900)	(42,900)	(34,503)	8,397
Total Other Financing Sources (Uses)	(42,900)	(42,900)	(34,503)	8,397
Net Change in Fund Balances	(24,200)	(28,000)	89,094	117,094
Fund Balances Beginning	303,898	303,898	303,898	-
Fund Balances Ending	$ 279,698	$ 275,898	$ 392,992	$ 117,094

Continued

City of Rocklin

Schedule of Revenues, Expenditures, and Changes in Fund Balances
Budget and Actual (GAAP Basis)
Special Revenue Nonmajor Governmental Funds
For the Year Ended June 30, 2024

	Housing Rehabilitation			
	Budgeted Amounts			
	Original	Final	Actual Amounts	Variance with Final Budget Positive (Negative)
REVENUES				
Taxes and assessments	$ -	$ -	$ -	$ -
Licenses and permits	-	-	-	-
Fines and forfeitures	-	-	-	-
Intergovernmental	-	-	-	-
Use of money and property	-	-	1,686	1,686
Other revenues	-	-	-	-
Total Revenues	-	-	1,686	1,686
EXPENDITURES				
Current:				
General government	-	-	-	-
Public safety	-	-	-	-
Public works	-	-	-	-
Parks and recreation	-	-	-	-
Community development	-	-	-	-
Capital outlay	-	-	-	-
Total Expenditures	-	-	-	-
Excess (Deficiency) of Revenues over Expenditures	-	-	1,686	1,686
OTHER FINANCING SOURCES (USES)				
Settlements and recoveries	-	-	-	-
Transfers in	-	-	-	-
Transfers out	-	-	-	-
Total Other Financing Sources (Uses)	-	-	-	-
Net Change in Fund Balances	-	-	1,686	1,686
Fund Balances Beginning	843,607	843,607	843,607	-
Fund Balances Ending	$ 843,607	$ 843,607	$ 845,293	$ 1,686

Continued

City of Rocklin

Schedule of Revenues, Expenditures, and Changes in Fund Balances
Budget and Actual (GAAP Basis)
Special Revenue Nonmajor Governmental Funds
For the Year Ended June 30, 2024

	Asset Forfeiture			
	Budgeted Amounts		Actual Amounts	Variance with Final Budget Positive (Negative)
	Original	Final		
REVENUES				
Taxes and assessments	$ -	$ -	$ -	$ -
Licenses and permits	-	-	-	-
Fines and forfeitures	100,000	100,000	86,155	(13,845)
Intergovernmental	-	-	-	-
Use of money and property	16,700	16,700	628	(16,072)
Other revenues	-	-	-	-
Total Revenues	116,700	116,700	86,783	(29,917)
EXPENDITURES				
Current:				
General government	-	-	-	-
Public safety	50,000	85,875	85,372	503
Public works	-	-	-	-
Parks and recreation	-	-	-	-
Community development	-	-	-	-
Capital outlay	-	-	-	-
Total Expenditures	50,000	85,875	85,372	503
Excess (Deficiency) of Revenues over Expenditures	66,700	30,825	1,411	(29,414)
OTHER FINANCING SOURCES (USES)				
Settlements and recoveries	-	-	-	-
Transfers in	-	-	-	-
Transfers out	-	-	-	-
Total Other Financing Sources (Uses)	-	-	-	-
Net Change in Fund Balances	66,700	30,825	1,411	(29,414)
Fund Balances Beginning	425,368	425,368	425,368	-
Fund Balances Ending	$ 492,068	$ 456,193	$ 426,779	$ (29,414)

Continued

City of Rocklin

Schedule of Revenues, Expenditures, and Changes in Fund Balances
Budget and Actual (GAAP Basis)
Special Revenue Nonmajor Governmental Funds
For the Year Ended June 30, 2024

	Traffic Safety/PD Grants			
	Budgeted Amounts			Variance with Final Budget
	Original	Final	Actual Amounts	Positive (Negative)
REVENUES				
Taxes and assessments	$ -	$ -	$ -	$ -
Licenses and permits	-	-	-	-
Fines and forfeitures	-	-	-	-
Intergovernmental	142,300	633,110	476,121	(156,989)
Use of money and property	-	-	-	-
Other revenues	-	-	-	-
Total Revenues	142,300	633,110	476,121	(156,989)
EXPENDITURES				
Current:				
General government	-	-	564	(564)
Public safety	186,700	356,360	147,915	208,445
Public works	-	-	-	-
Parks and recreation	-	-	-	-
Community development	-	-	-	-
Capital outlay	-	321,150	248,504	72,646
Total Expenditures	186,700	677,510	396,983	280,527
Excess (Deficiency) of Revenues over Expenditures	(44,400)	(44,400)	79,138	123,538
OTHER FINANCING SOURCES (USES)				
Settlements and recoveries	-	-	-	-
Transfers in	44,400	44,400	1,123	(43,277)
Transfers out	-	-	(543)	(543)
Total Other Financing Sources (Uses)	44,400	44,400	580	(43,820)
Net Change in Fund Balances	-	-	79,718	79,718
Fund Balances Beginning	(111,524)	(111,524)	(111,524)	-
Fund Balances Ending	$ (111,524)	$ (111,524)	$ (31,806)	$ 79,718

Continued

City of Rocklin

Schedule of Revenues, Expenditures, and Changes in Fund Balances
Budget and Actual (GAAP Basis)
Special Revenue Nonmajor Governmental Funds
For the Year Ended June 30, 2024

	CASp Certification and Training Fund			
	Budgeted Amounts			Variance with Final Budget
	Original	Final	Actual Amounts	Positive (Negative)
REVENUES				
Taxes and assessments	$ -	$ -	$ -	$ -
Licenses and permits	-	-	16,894	16,894
Fines and forfeitures	-	-	-	-
Intergovernmental	-	-	-	-
Use of money and property	-	-	-	-
Other revenues	-	-	-	-
Total Revenues	-	-	16,894	16,894
EXPENDITURES				
Current:				
General government	-	-	843	(843)
Public safety	-	-	-	-
Public works	-	-	-	-
Parks and recreation	-	-	-	-
Community development	-	-	-	-
Capital outlay	-	-	-	-
Total Expenditures	-	-	843	(843)
Excess (Deficiency) of Revenues over Expenditures	-	-	16,051	16,051
OTHER FINANCING SOURCES (USES)				
Settlements and recoveries	-	-	-	-
Transfers in	-	-	-	-
Transfers out	-	-	-	-
Total Other Financing Sources (Uses)	-	-	-	-
Net Change in Fund Balances	-	-	16,051	16,051
Fund Balances Beginning	83,251	83,251	83,251	-
Fund Balances Ending	$ 83,251	$ 83,251	$ 99,302	$ 16,051

Continued

City of Rocklin

Schedule of Revenues, Expenditures, and Changes in Fund Balances
Budget and Actual (GAAP Basis)
Special Revenue Nonmajor Governmental Funds
For the Year Ended June 30, 2024

	CDBG HUD Entitlement			
	Budgeted Amounts			Variance with Final Budget
	Original	Final	Actual Amounts	Positive (Negative)
REVENUES				
Taxes and assessments	$ -	$ -	$ -	$ -
Licenses and permits	-	-	-	-
Fines and forfeitures	-	-	-	-
Intergovernmental	300,100	302,570	297,229	(5,341)
Use of money and property	-	-	-	-
Other revenues	-	-	-	-
Total Revenues	300,100	302,570	297,229	(5,341)
EXPENDITURES				
Current:				
General government	1,000	1,000	1,000	-
Public safety	-	-	-	-
Public works	195,100	197,570	196,612	958
Parks and recreation	-	-	-	-
Community development	45,000	45,000	40,582	4,418
Capital outlay	-	-	-	-
Total Expenditures	241,100	243,570	238,194	5,376
Excess (Deficiency) of Revenues over Expenditures	59,000	59,000	59,035	35
OTHER FINANCING SOURCES (USES)				
Settlements and recoveries	-	-	-	-
Transfers in	-	-	-	-
Transfers out	(59,000)	(59,000)	(59,035)	(35)
Total Other Financing Sources (Uses)	(59,000)	(59,000)	(59,035)	(35)
Net Change in Fund Balances	-	-	-	-
Fund Balances Beginning	-	-	-	-
Fund Balances Ending	$ -	$ -	$ -	$ -

Continued

City of Rocklin

Schedule of Revenues, Expenditures, and Changes in Fund Balances
Budget and Actual (GAAP Basis)
Special Revenue Nonmajor Governmental Funds
For the Year Ended June 30, 2024

	DOF CARES Act			
	Budgeted Amounts			
	Original	Final	Actual Amounts	Variance with Final Budget Positive (Negative)
REVENUES				
Taxes and assessments	$ -	$ -	$ -	$ -
Licenses and permits	-	-	-	-
Fines and forfeitures	-	-	-	-
Intergovernmental	-	67,210	40,080	(27,130)
Use of money and property	-	-	-	-
Other revenues	-	-	-	-
Total Revenues	-	67,210	40,080	(27,130)
EXPENDITURES				
Current:				
General government	-	-	-	-
Public safety	-	-	-	-
Public works	-	-	-	-
Parks and recreation	-	-	-	-
Community development	-	67,214	40,080	27,134
Capital outlay	-	-	-	-
Total Expenditures	-	67,214	40,080	27,134
Excess (Deficiency) of Revenues over Expenditures	-	(4)	-	4
OTHER FINANCING SOURCES (USES)				
Settlements and recoveries	-	-	-	-
Transfers in	-	-	-	-
Transfers out	-	-	-	-
Total Other Financing Sources (Uses)	-	-	-	-
Net Change in Fund Balances	-	(4)	-	4
Fund Balances Beginning	-	-	-	-
Fund Balances Ending	$ -	$ (4)	$ -	$ 4

Continued

City of Rocklin

Schedule of Revenues, Expenditures, and Changes in Fund Balances
Budget and Actual (GAAP Basis)
Special Revenue Nonmajor Governmental Funds
For the Year Ended June 30, 2024

	Grants & Other Reimbursable			
	Budgeted Amounts			
	Original	Final	Actual Amounts	Variance with Final Budget Positive (Negative)
REVENUES				
Taxes and assessments	$ -	$ -	$ -	$ -
Licenses and permits	-	-	-	-
Fines and forfeitures	-	-	-	-
Intergovernmental	60,300	702,017	679,062	(22,955)
Use of money and property	-	-	-	-
Other revenues	-	-	-	-
Total Revenues	60,300	702,017	679,062	(22,955)
EXPENDITURES				
Current:				
General government	-	-	-	-
Public safety	-	70,237	35,276	34,961
Public works	-	82,400	93,882	(11,482)
Parks and recreation	-	-	-	-
Community development	-	-	-	-
Capital outlay	-	489,080	153,956	335,124
Total Expenditures	-	641,717	283,114	358,603
Excess (Deficiency) of Revenues over Expenditures	60,300	60,300	395,948	335,648
OTHER FINANCING SOURCES (USES)				
Settlements and recoveries	-	-	-	-
Transfers in	-	-	-	-
Transfers out	(60,300)	(60,300)	(64,754)	(4,454)
Total Other Financing Sources (Uses)	(60,300)	(60,300)	(64,754)	(4,454)
Net Change in Fund Balances	-	-	331,194	331,194
Fund Balances Beginning	(470,345)	(470,345)	(470,345)	-
Fund Balances Ending	$ (470,345)	$ (470,345)	$ (139,151)	$ 331,194

Continued

City of Rocklin

Schedule of Revenues, Expenditures, and Changes in Fund Balances
Budget and Actual (GAAP Basis)
Special Revenue Nonmajor Governmental Funds
For the Year Ended June 30, 2024

	Supplemental Law Enforcement Grant			
	Budgeted Amounts		Actual Amounts	Variance with Final Budget Positive (Negative)
	Original	Final		
REVENUES				
Taxes and assessments	$ -	$ -	$ -	$ -
Licenses and permits	-	-	-	-
Fines and forfeitures	-	-	-	-
Intergovernmental	189,300	189,300	206,033	16,733
Use of money and property	-	-	-	-
Other revenues	-	-	-	-
Total Revenues	189,300	189,300	206,033	16,733
EXPENDITURES				
Current:				
General government	-	-	-	-
Public safety	-	-	-	-
Public works	-	-	-	-
Parks and recreation	-	-	-	-
Community development	-	-	-	-
Capital outlay	-	-	-	-
Total Expenditures	-	-	-	-
Excess (Deficiency) of Revenues over Expenditures	189,300	189,300	206,033	16,733
OTHER FINANCING SOURCES (USES)				
Settlements and recoveries	-	-	-	-
Transfers in	-	-	-	-
Transfers out	(189,300)	(189,300)	(206,033)	(16,733)
Total Other Financing Sources (Uses)	(189,300)	(189,300)	(206,033)	(16,733)
Net Change in Fund Balances	-	-	-	-
Fund Balances Beginning	-	-	-	-
Fund Balances Ending	$ -	$ -	$ -	$ -

City of Rocklin

Schedule of Revenues, Expenditures, and Changes in Fund Balances
Budget and Actual (GAAP Basis)
Special Revenue Nonmajor Governmental Funds
For the Year Ended June 30, 2024

	Costco Settlement			
	Budgeted Amounts			Variance with Final Budget Positive (Negative)
	Original	Final	Actual Amounts	
REVENUES				
Taxes and assessments	$ -	$ -	$ -	$ -
Licenses and permits	-	-	-	-
Fines and forfeitures	-	-	-	-
Intergovernmental	-	-	-	-
Use of money and property	-	-	-	-
Other revenues	-	-	-	-
Total Revenues	-	-	-	-
EXPENDITURES				
Current:				
General government	-	-	-	-
Public safety	-	-	-	-
Public works	-	-	-	-
Parks and recreation	-	-	-	-
Community development	-	-	-	-
Capital outlay	-	-	-	-
Total Expenditures	-	-	-	-
Excess (Deficiency) of Revenues over Expenditures	-	-	-	-
OTHER FINANCING SOURCES (USES)				
Settlements and recoveries	-	-	-	-
Transfers in	-	-	-	-
Transfers out	-	-	-	-
Total Other Financing Sources (Uses)	-	-	-	-
Net Change in Fund Balances	-	-	-	-
Fund Balances Beginning	3,755,224	3,755,224	3,755,224	-
Fund Balances Ending	$ 3,755,224	$ 3,755,224	$ 3,755,224	$ -

City of Rocklin

Schedule of Revenues, Expenditures, and Changes in Fund Balances
Budget and Actual (GAAP Basis)
Special Revenue Nonmajor Governmental Funds
For the Year Ended June 30, 2024

	OPIOID Settlement			
	Budgeted Amounts			
	Original	Final	Actual Amounts	Variance with Final Budget Positive (Negative)
REVENUES				
Taxes and assessments	$ -	$ -	$ -	$ -
Licenses and permits	-	-	-	-
Fines and forfeitures	-	-	-	-
Intergovernmental	-	-	-	-
Use of money and property	-	-	7,220	7,220
Other revenues	-	-	170,143	170,143
Total Revenues	-	-	177,363	177,363
EXPENDITURES				
Current:				
General government	-	-	-	-
Public safety	-	-	-	-
Public works	-	-	-	-
Parks and recreation	-	-	-	-
Community development	-	-	-	-
Capital outlay	-	-	-	-
Total Expenditures	-	-	-	-
Excess (Deficiency) of Revenues over Expenditures	-	-	177,363	177,363
OTHER FINANCING SOURCES (USES)				
Settlements and recoveries	-	-	-	-
Transfers in	-	-	-	-
Transfers out	-	-	(170,143)	(170,143)
Total Other Financing Sources (Uses)	-	-	(170,143)	(170,143)
Net Change in Fund Balances	-	-	7,220	7,220
Fund Balances Beginning	1,339	1,339	1,339	-
Fund Balances Ending	$ 1,339	$ 1,339	$ 8,559	$ 7,220

Concluded

NONMAJOR CAPITAL PROJECTS FUNDS

Fund Title	Fund Description
Park Development Fees	Accounts for funds expended on City park projects and improvements.
Community Park Fees	Accounts for funds collected and expended for City park land and improvements.
Capital Construction Tax	Accounts for the capital construction tax that is used for the expansion of facilities to serve new developments within the City.
Oak Tree Mitigation Fees	Accounts for funds collected for Oak Tree preservation activities including land acquisition and oak tree planting, acquisition, and maintenance.
Whitney Ranch Trunk Sewer Project	Accounts for impact fees to fund the sewer trunk line upgrade.
North West Rocklin Community Park Fees	Developers in the North West Rocklin area are required to pay impact fees, which can only be used to fund community parks in the North West Rocklin area (Whitney Ranch Park).
Public Facilities Impact Fees	This fund accounts for impact fees used to fund expansion of public facilities to serve new development within the City.
Rocklin Public Financing Authority Capital Projects	Accounts for Rocklin Public Financing Authority capital projects funded by bond proceeds.
Trails Impact Fees	This fund accounts for impact fees used to construct additional trails to reduce the impacts caused by new development within the City.
Community Center Impact Fees	This fund accounts for impact fees used for new or additions to existing community recreation center facilities.
Whitney Ranch Interchange Fees	This fund accounts for impact fees used to develop Highway 65 interchanges in the Whitney Ranch area.

City of Rocklin
Combining Balance Sheet
Capital Projects Nonmajor Governmental Funds
June 30, 2024
(With Comparative Totals for June 30, 2023)

	Park Development Fees	Community Park Fees	Capital Construction Tax	Oak Tree Mitigation Fees
ASSETS				
Cash and investments	$ 482,090	560,037	$ 6,928,185	$ 541,213
Total assets	$ 482,090	$ 560,037	$ 6,928,185	$ 541,213
LIABILITIES AND FUND BALANCES				
Liabilities:				
Accounts payable and accrued liabilities	$ -	$ -	$ 2,626	$ 46,671
Due to other funds	-	-	-	-
Total liabilities	-	-	2,626	46,671
Fund Balances:				
Committed	482,090	560,037	6,925,559	494,542
Unassigned (Deficit)	-	-	-	-
Total fund balances	482,090	560,037	6,925,559	494,542
Total liabilities and fund balances	$ 482,090	$ 560,037	$ 6,928,185	$ 541,213

Continued

City of Rocklin
Combining Balance Sheet
Capital Projects Nonmajor Governmental Funds
June 30, 2024
(With Comparative Totals for June 30, 2023)

	Whitney Ranch Trunk Sewer Project	North West Rocklin Community Park Fees	Public Facilities Impact Fees	Trail Impact Fees
ASSETS				
Cash and investments	$ -	$ 1,375,381	$ 1,445,696	$ 37,197
Total assets	$ -	$ 1,375,381	$ 1,445,696	$ 37,197
LIABILITIES AND FUND BALANCES				
Liabilities:				
Accounts payable and accrued liabilities	$ -	$ 1,235	$ -	$ -
Due to other funds	-	-	-	-
Total liabilities	-	1,235	-	-
Fund Balances:				
Committed	-	1,374,146	1,445,696	37,197
Unassigned (Deficit)	-	-	-	-
Total fund balances	-	1,374,146	1,445,696	37,197
Total liabilities and fund balances	$ -	$ 1,375,381	$ 1,445,696	$ 37,197

Continued

City of Rocklin
Combining Balance Sheet
Capital Projects Nonmajor Governmental Funds
June 30, 2024
(With Comparative Totals for June 30, 2023)

	Community Center Impact Fees	Whitney Ranch Interchange Fees	Total Capital Projects Nonmajor Governmental Funds	
			2024	2023
ASSETS				
Cash and investments	$ 161,078	$ 1,746,511	$ 13,277,388	$ 10,569,355
Total assets	$ 161,078	$ 1,746,511	$ 13,277,388	$ 10,569,355
LIABILITIES AND FUND BALANCES				
Liabilities:				
Accounts payable and accrued liabilities	$ -	$ 54,720	$ 105,252	$ 10,686
Due to other funds	-	-	-	130,646
Total liabilities	-	54,720	105,252	141,332
Fund Balances:				
Committed	161,078	1,691,791	13,172,136	10,558,669
Unassigned (Deficit)	-	-	-	(130,646)
Total fund balances	161,078	1,691,791	13,172,136	10,428,023
Total liabilities and fund balances	$ 161,078	$ 1,746,511	$ 13,277,388	$ 10,569,355

Concluded

City of Rocklin

Combining Statement of Revenues, Expenditures, and Changes in Fund Balances
Capital Projects Nonmajor Governmental Funds
For the Year Ended June 30, 2024
(With Comparative Totals for June 30, 2023)

	Park Development Fees	Community Park Fees	Capital Construction Tax	Oak Tree Mitigation Fees
REVENUES				
Taxes and assessments	$ 18,335	$ 813,928	$ -	$ 494,981
Licenses and permits	-	-	-	-
Charges for services	-	-	-	-
Use of money and property	21,349	2,239	222,212	8,655
Contributions and donations	-	-	792,565	-
Total Revenues	39,684	816,167	1,014,777	503,636
EXPENDITURES				
Current:				
Public safety	-	-	2,626	-
Public works	-	-	-	59,359
Parks and recreation	-	-	-	62,627
Capital outlay	-	-	130,686	-
Debt service:				
Principal	393,904	123,030	-	-
Interest and fiscal charges	7,857	2,454	-	-
Total Expenditures	401,761	125,484	133,312	121,986
Excess (Deficiency) of Revenues over Expenditures	(362,077)	690,683	881,465	381,650
OTHER FINANCING SOURCES (USES)				
Transfers in	-	-	500,000	-
Transfers out	-	-	(531,610)	(16,420)
Total Other Financing Sources (Uses)	-	-	(31,610)	(16,420)
Net Change in Fund Balances	(362,077)	690,683	849,855	365,230
Fund Balances Beginning	844,167	(130,646)	6,075,704	129,312
Fund Balances Ending	$ 482,090	$ 560,037	$ 6,925,559	$ 494,542

Continued

City of Rocklin

Combining Statement of Revenues, Expenditures, and Changes in Fund Balances
Capital Projects Nonmajor Governmental Funds
For the Year Ended June 30, 2024
(With Comparative Totals for June 30, 2023)

	Whitney Ranch Trunk Sewer Project	North West Rocklin Community Park Fees	Public Facilities Impact Fees	Trail Impact Fees
REVENUES				
Taxes and assessments	$ -	$ -	$ -	$ -
Licenses and permits	37,623	-	-	-
Charges for services	-	423,109	382,685	35,897
Use of money and property	-	38,281	41,327	447
Contributions and donations	-	-	-	-
Total Revenues	37,623	461,390	424,012	36,344
EXPENDITURES				
Current:				
Public safety	-	-	-	-
Public works	-	-	-	-
Parks and recreation	-	-	-	-
Capital outlay	-	49,314	-	-
Debt service:				
Principal	-	-	-	-
Interest and fiscal charges	28,968	-	-	-
Total Expenditures	28,968	49,314	-	-
Excess (Deficiency) of Revenues over Expenditures	8,655	412,076	424,012	36,344
OTHER FINANCING SOURCES (USES)				
Transfers in	-	-	-	-
Transfers out	(8,655)	(2,727)	-	-
Total Other Financing Sources (Uses)	(8,655)	(2,727)	-	-
Net Change in Fund Balances	-	409,349	424,012	36,344
Fund Balances Beginning	-	964,797	1,021,684	853
Fund Balances Ending	$ -	$ 1,374,146	$ 1,445,696	$ 37,197

Continued

City of Rocklin

Combining Statement of Revenues, Expenditures, and Changes in Fund Balances
Capital Projects Nonmajor Governmental Funds
For the Year Ended June 30, 2024
(With Comparative Totals for June 30, 2023)

	Community Center Impact Fees	Whitney Ranch Interchange Fees	Total Capital Projects Nonmajor Governmental Funds	
			2024	2023
REVENUES				
Taxes and assessments	$ -	$ -	$ 1,327,244	$ 506,231
Licenses and permits	-	-	37,623	18,760
Charges for services	155,451	231,960	1,229,102	113,022
Use of money and property	1,924	56,750	393,184	191,649
Contributions and donations	-	-	792,565	883,895
Total Revenues	157,375	288,710	3,779,718	1,713,557
EXPENDITURES				
Current:				
Public safety	-	-	2,626	-
Public works	-	-	59,359	1,495,465
Parks and recreation	-	-	62,627	67,299
Capital outlay	-	108,063	288,063	64,003
Debt service:				
Principal	-	-	516,934	515,009
Interest and fiscal charges	-	-	39,279	39,371
Total Expenditures	-	108,063	968,888	2,181,147
Excess (Deficiency) of Revenues over Expenditures	157,375	180,647	2,810,830	(467,590)
OTHER FINANCING SOURCES (USES)				
Transfers in	-	-	500,000	1,098,000
Transfers out	-	(7,305)	(566,717)	(984,312)
Total Other Financing Sources (Uses)	-	(7,305)	(66,717)	113,688
Net Change in Fund Balances	157,375	173,342	2,744,113	(353,902)
Fund Balances Beginning	3,703	1,518,449	10,428,023	10,781,925
Fund Balances Ending	$ 161,078	$ 1,691,791	$ 13,172,136	$ 10,428,023

Concluded

City of Rocklin

Schedule of Revenues, Expenditures, and Changes in Fund Balances
Budget and Actual (GAAP Basis)
Capital Projects Nonmajor Governmental Funds
For the Year Ended June 30, 2024

	Park Development Fees			
	Budgeted Amounts			Variance with Final Budget Positive (Negative)
	Original	Final	Actual Amounts	
REVENUES				
Taxes and assessments	$ 801,900	$ 801,900	$ 18,335	$ (783,565)
Licenses and permits	-	-	-	-
Intergovernmental revenues	-	-	-	-
Charges for services	-	-	-	-
Use of money and property	33,900	33,900	21,349	(12,551)
Contributions and donations	-	-	-	-
Other revenues	-	-	-	-
Total Revenues	835,800	835,800	39,684	(796,116)
EXPENDITURES				
Current:				
General government	-	-	-	-
Public safety	-	-	-	-
Public works	-	-	-	-
Parks and recreation	-	-	-	-
Community development	-	-	-	-
Capital outlay	-	-	-	-
Debt service:				
Principal	393,900	393,900	393,904	(4)
Interest and fiscal charges	7,900	7,900	7,857	43
Total Expenditures	401,800	401,800	401,761	39
Excess (Deficiency) of Revenues over Expenditures	434,000	434,000	(362,077)	(796,077)
OTHER FINANCING SOURCES (USES)				
Transfers in	-	-	-	-
Transfers out	-	-	-	-
Total Other Financing Sources (Uses)	-	-	-	-
Net Change in Fund Balances	434,000	434,000	(362,077)	(796,077)
Fund Balances Beginning	844,167	844,167	844,167	-
Fund Balances Ending	$ 1,278,167	$ 1,278,167	$ 482,090	$ (796,077)

Continued

City of Rocklin

Schedule of Revenues, Expenditures, and Changes in Fund Balances
Budget and Actual (GAAP Basis)
Capital Projects Nonmajor Governmental Funds
For the Year Ended June 30, 2024

	Community Park Fees			
	Budgeted Amounts			Variance with Final Budget Positive (Negative)
	Original	Final	Actual Amounts	
REVENUES				
Taxes and assessments	$ 677,900	$ 677,900	$ 813,928	$ 136,028
Licenses and permits	-	-	-	-
Intergovernmental revenues	-	-	-	-
Charges for services	-	-	-	-
Use of money and property	3,100	3,100	2,239	(861)
Contributions and donations	-	-	-	-
Other revenues	-	-	-	-
Total Revenues	681,000	681,000	816,167	135,167
EXPENDITURES				
Current:				
General government	-	-	-	-
Public safety	-	-	-	-
Public works	-	-	-	-
Parks and recreation	-	-	-	-
Community development	-	-	-	-
Capital outlay	-	-	-	-
Debt service:				
Principal	123,000	123,000	123,030	(30)
Interest and fiscal charges	2,500	2,500	2,454	46
Total Expenditures	125,500	125,500	125,484	16
Excess (Deficiency) of Revenues over Expenditures	555,500	555,500	690,683	135,183
OTHER FINANCING SOURCES (USES)				
Transfers in	-	-	-	-
Transfers out	-	-	-	-
Total Other Financing Sources (Uses)	-	-	-	-
Net Change in Fund Balances	555,500	555,500	690,683	135,183
Fund Balances Beginning	(130,646)	(130,646)	(130,646)	-
Fund Balances Ending	$ 424,854	$ 424,854	$ 560,037	$ 135,183

Continued

City of Rocklin

Schedule of Revenues, Expenditures, and Changes in Fund Balances
Budget and Actual (GAAP Basis)
Capital Projects Nonmajor Governmental Funds
For the Year Ended June 30, 2024

	Capital Construction Tax			
	Budgeted Amounts			Variance with Final Budget
	Original	Final	Actual Amounts	Positive (Negative)
REVENUES				
Taxes and assessments	$ -	$ -	$ -	$ -
Licenses and permits	-	-	-	-
Intergovernmental revenues	-	-	-	-
Charges for services	-	-	-	-
Use of money and property	142,600	142,600	222,212	79,612
Contributions and donations	703,200	703,200	792,565	89,365
Other revenues	-	-	-	-
Total Revenues	845,800	845,800	1,014,777	168,977
EXPENDITURES				
Current:				
General government	-	-	-	-
Public safety	-	15,000	2,626	12,374
Public works	-	-	-	-
Parks and recreation	-	-	-	-
Community development	-	-	-	-
Capital outlay	1,298,700	2,763,500	130,686	2,632,814
Debt service:				
Principal	-	-	-	-
Interest and fiscal charges	-	-	-	-
Total Expenditures	1,298,700	2,778,500	133,312	2,645,188
Excess (Deficiency) of Revenues over Expenditures	(452,900)	(1,932,700)	881,465	2,814,165
OTHER FINANCING SOURCES (USES)				
Transfers in	500,000	500,000	500,000	-
Transfers out	(532,800)	(532,800)	(531,610)	1,190
Total Other Financing Sources (Uses)	(32,800)	(32,800)	(31,610)	1,190
Net Change in Fund Balances	(485,700)	(1,965,500)	849,855	2,815,355
Fund Balances Beginning	6,075,704	6,075,704	6,075,704	-
Fund Balances Ending	$ 5,590,004	$ 4,110,204	$ 6,925,559	$ 2,815,355

Continued

City of Rocklin

Schedule of Revenues, Expenditures, and Changes in Fund Balances
Budget and Actual (GAAP Basis)
Capital Projects Nonmajor Governmental Funds
For the Year Ended June 30, 2024

	Oak Tree Mitigation Fees			
	Budgeted Amounts			
	Original	Final	Actual Amounts	Variance with Final Budget Positive (Negative)
REVENUES				
Taxes and assessments	$ 44,000	$ 44,000	$ 494,981	$ 450,981
Licenses and permits	-	-	-	-
Intergovernmental revenues	-	-	-	-
Charges for services	-	-	-	-
Use of money and property	-	-	8,655	8,655
Contributions and donations	-	-	-	-
Other revenues	-	-	-	-
Total Revenues	44,000	44,000	503,636	459,636
EXPENDITURES				
Current:				
General government	-	-	-	-
Public safety	-	-	-	-
Public works	78,500	78,500	59,359	19,141
Parks and recreation	74,000	74,000	62,627	11,373
Community development	-	-	-	-
Capital outlay	-	-	-	-
Debt service:				
Principal	-	-	-	-
Interest and fiscal charges	-	-	-	-
Total Expenditures	152,500	152,500	121,986	30,514
Excess (Deficiency) of Revenues over Expenditures	(108,500)	(108,500)	381,650	490,150
OTHER FINANCING SOURCES (USES)				
Transfers in	-	-	-	-
Transfers out	(4,800)	(4,800)	(16,420)	(11,620)
Total Other Financing Sources (Uses)	(4,800)	(4,800)	(16,420)	(11,620)
Net Change in Fund Balances	(113,300)	(113,300)	365,230	478,530
Fund Balances Beginning	129,312	129,312	129,312	-
Fund Balances Ending	$ 16,012	$ 16,012	$ 494,542	$ 478,530

Continued

City of Rocklin

Schedule of Revenues, Expenditures, and Changes in Fund Balances
Budget and Actual (GAAP Basis)
Capital Projects Nonmajor Governmental Funds
For the Year Ended June 30, 2024

	Whitney Ranch Trunk Sewer Project			
	Budgeted Amounts			Variance with Final Budget Positive (Negative)
	Original	Final	Actual Amounts	
REVENUES				
Taxes and assessments	$ -	$ -	$ -	$ -
Licenses and permits	33,800	33,800	37,623	3,823
Intergovernmental revenues	-	-	-	-
Charges for services	-	-	-	-
Use of money and property	10,700	10,700	-	(10,700)
Contributions and donations	-	-	-	-
Other revenues	-	-	-	-
Total Revenues	44,500	44,500	37,623	(6,877)
EXPENDITURES				
Current:				
General government	-	-	-	-
Public safety	-	-	-	-
Public works	-	-	-	-
Parks and recreation	-	-	-	-
Community development	-	3,109	-	3,109
Capital outlay	-	-	-	-
Debt service:				
Principal	-	-	-	-
Interest and fiscal charges	-	-	28,968	(28,968)
Total Expenditures	-	3,109	28,968	(25,859)
Excess (Deficiency) of Revenues over Expenditures	44,500	41,391	8,655	(32,736)
OTHER FINANCING SOURCES (USES)				
Transfers in	-	-	-	-
Transfers out	(44,500)	(44,500)	(8,655)	35,845
Total Other Financing Sources (Uses)	(44,500)	(44,500)	(8,655)	35,845
Net Change in Fund Balances	-	(3,109)	-	3,109
Fund Balances Beginning	-	-	-	-
Fund Balances Ending	$ -	$ (3,109)	$ -	$ 3,109

Continued

City of Rocklin

Schedule of Revenues, Expenditures, and Changes in Fund Balances
Budget and Actual (GAAP Basis)
Capital Projects Nonmajor Governmental Funds
For the Year Ended June 30, 2024

	North West Rocklin Community Park Fees			
	Budgeted Amounts			Variance with Final Budget Positive (Negative)
	Original	Final	Actual Amounts	
REVENUES				
Taxes and assessments	$ -	$ -	$ -	$ -
Licenses and permits	-	-	-	-
Intergovernmental revenues	-	-	-	-
Charges for services	419,400	419,400	423,109	3,709
Use of money and property	7,100	7,100	38,281	31,181
Contributions and donations	-	-	-	-
Other revenues	-	-	-	-
Total Revenues	426,500	426,500	461,390	34,890
EXPENDITURES				
Current:				
General government	-	-	-	-
Public safety	-	-	-	-
Public works	-	-	-	-
Parks and recreation	-	-	-	-
Community development	-	-	-	-
Capital outlay	-	1,084,485	49,314	1,035,171
Debt service:				
Principal	-	-	-	-
Interest and fiscal charges	-	-	-	-
Total Expenditures	-	1,084,485	49,314	1,035,171
Excess (Deficiency) of Revenues over Expenditures	426,500	(657,985)	412,076	1,070,061
OTHER FINANCING SOURCES (USES)				
Transfers in	-	-	-	-
Transfers out	-	-	(2,727)	(2,727)
Total Other Financing Sources (Uses)	-	-	(2,727)	(2,727)
Net Change in Fund Balances	426,500	(657,985)	409,349	1,067,334
Fund Balances Beginning	964,797	964,797	964,797	-
Fund Balances Ending	$ 1,391,297	$ 306,812	$ 1,374,146	$ 1,067,334

Continued

City of Rocklin

Schedule of Revenues, Expenditures, and Changes in Fund Balances
Budget and Actual (GAAP Basis)
Capital Projects Nonmajor Governmental Funds
For the Year Ended June 30, 2024

	Public Facilities Impact Fees			
	Budgeted Amounts			
	Original	Final	Actual Amounts	Variance with Final Budget Positive (Negative)
REVENUES				
Taxes and assessments	$ -	$ -	$ -	$ -
Licenses and permits	-	-	-	-
Intergovernmental revenues	-	-	-	-
Charges for services	23,400	23,400	382,685	359,285
Use of money and property	37,600	37,600	41,327	3,727
Contributions and donations	-	-	-	-
Other revenues	-	-	-	-
Total Revenues	61,000	61,000	424,012	363,012
EXPENDITURES				
Current:				
General government	-	-	-	-
Public safety	-	-	-	-
Public works	-	-	-	-
Parks and recreation	-	-	-	-
Community development	-	-	-	-
Capital outlay	-	-	-	-
Debt service:				
Principal	-	-	-	-
Interest and fiscal charges	-	-	-	-
Total Expenditures	-	-	-	-
Excess (Deficiency) of Revenues over Expenditures	61,000	61,000	424,012	363,012
OTHER FINANCING SOURCES (USES)				
Transfers in	-	-	-	-
Transfers out	-	-	-	-
Total Other Financing Sources (Uses)	-	-	-	-
Net Change in Fund Balances	61,000	61,000	424,012	363,012
Fund Balances Beginning	1,021,684	1,021,684	1,021,684	-
Fund Balances Ending	$ 1,082,684	$ 1,082,684	$ 1,445,696	$ 363,012

Continued

City of Rocklin

Schedule of Revenues, Expenditures, and Changes in Fund Balances
Budget and Actual (GAAP Basis)
Capital Projects Nonmajor Governmental Funds
For the Year Ended June 30, 2024

	Trail Impact Fees			
	Budgeted Amounts			Variance with Final Budget Positive (Negative)
	Original	Final	Actual Amounts	
REVENUES				
Taxes and assessments	$ -	$ -	$ -	$ -
Licenses and permits	-	-	-	-
Intergovernmental revenues	-	-	-	-
Charges for services	52,900	52,900	35,897	(17,003)
Use of money and property	700	700	447	(253)
Contributions and donations	-	-	-	-
Other revenues	-	-	-	-
Total Revenues	53,600	53,600	36,344	(17,256)
EXPENDITURES				
Current:				
General government	-	-	-	-
Public safety	-	-	-	-
Public works	-	-	-	-
Parks and recreation	-	-	-	-
Community development	-	-	-	-
Capital outlay	-	-	-	-
Debt service:				
Principal	-	-	-	-
Interest and fiscal charges	-	-	-	-
Total Expenditures	-	-	-	-
Excess (Deficiency) of Revenues over Expenditures	53,600	53,600	36,344	(17,256)
OTHER FINANCING SOURCES (USES)				
Transfers in	-	-	-	-
Transfers out	-	-	-	-
Total Other Financing Sources (Uses)	-	-	-	-
Net Change in Fund Balances	53,600	53,600	36,344	(17,256)
Fund Balances Beginning	853	853	853	-
Fund Balances Ending	$ 54,453	$ 54,453	$ 37,197	$ (17,256)

Continued

City of Rocklin

Schedule of Revenues, Expenditures, and Changes in Fund Balances
Budget and Actual (GAAP Basis)
Capital Projects Nonmajor Governmental Funds
For the Year Ended June 30, 2024

	Community Center Impact Fees			
	Budgeted Amounts		Actual Amounts	Variance with Final Budget Positive (Negative)
	Original	Final		
REVENUES				
Taxes and assessments	$ -	$ -	$ -	$ -
Licenses and permits	-	-	-	-
Intergovernmental revenues	-	-	-	-
Charges for services	54,700	54,700	155,451	100,751
Use of money and property	700	700	1,924	1,224
Contributions and donations	-	-	-	-
Other revenues	-	-	-	-
Total Revenues	55,400	55,400	157,375	101,975
EXPENDITURES				
Current:				
General government	-	-	-	-
Public safety	-	-	-	-
Public works	-	-	-	-
Parks and recreation	-	-	-	-
Community development	-	-	-	-
Capital outlay	-	-	-	-
Debt service:				
Principal	-	-	-	-
Interest and fiscal charges	-	-	-	-
Total Expenditures	-	-	-	-
Excess (Deficiency) of Revenues over Expenditures	55,400	55,400	157,375	101,975
OTHER FINANCING SOURCES (USES)				
Transfers in	-	-	-	-
Transfers out	-	-	-	-
Total Other Financing Sources (Uses)	-	-	-	-
Net Change in Fund Balances	55,400	55,400	157,375	101,975
Fund Balances Beginning	3,703	3,703	3,703	-
Fund Balances Ending	$ 59,103	$ 59,103	$ 161,078	$ 101,975

Continued

City of Rocklin

Schedule of Revenues, Expenditures, and Changes in Fund Balances
Budget and Actual (GAAP Basis)
Capital Projects Nonmajor Governmental Funds
For the Year Ended June 30, 2024

	Whitney Ranch Interchange Fees			
	Budgeted Amounts			
	Original	Final	Actual Amounts	Variance with Final Budget Positive (Negative)
REVENUES				
Taxes and assessments	$ -	$ -	$ -	$ -
Licenses and permits	-	-	-	-
Intergovernmental revenues	-	-	-	-
Charges for services	74,900	74,900	231,960	157,060
Use of money and property	41,300	41,300	56,750	15,450
Contributions and donations	-	-	-	-
Other revenues	-	-	-	-
Total Revenues	116,200	116,200	288,710	172,510
EXPENDITURES				
Current:				
General government	-	-	-	-
Public safety	-	-	-	-
Public works	-	-	-	-
Parks and recreation	-	-	-	-
Community development	-	-	-	-
Capital outlay	-	200,000	108,063	91,937
Debt service:				
Principal	-	-	-	-
Interest and fiscal charges	-	-	-	-
Total Expenditures	-	200,000	108,063	91,937
Excess (Deficiency) of Revenues over Expenditures	116,200	(83,800)	180,647	264,447
OTHER FINANCING SOURCES (USES)				
Transfers in	-	-	-	-
Transfers out	-	-	(7,305)	(7,305)
Total Other Financing Sources (Uses)	-	-	(7,305)	(7,305)
Net Change in Fund Balances	116,200	(83,800)	173,342	257,142
Fund Balances Beginning	1,518,449	1,518,449	1,518,449	-
Fund Balances Ending	$ 1,634,649	$ 1,434,649	$ 1,691,791	$ 257,142

Concluded

City of Rocklin

Schedule of Revenues, Expenditures, and
Changes in Fund Balances
Budget and Actual (GAAP Basis) - Capital Projects Major Governmental Fund
Traffic Circulation Impact Fee Fund
For the Year Ended June 30, 2024

	Budgeted Amounts			Variance with Final Budget
	Original	Final	Actual Amounts	Positive (Negative)
REVENUES				
Taxes and assessments	$ 1,215,000	$ 1,215,000	$ 846,471	$ (368,529)
Intergovernmental revenues	502,500	502,500	502,511	11
Use of money and property	443,400	443,400	661,818	218,418
Total Revenues	2,160,900	2,160,900	2,010,800	(150,100)
EXPENDITURES				
Current:				
Community development	521,500	521,500	4,913	516,587
Capital outlay	1,500,000	2,536,800	238,757	2,298,043
Total Expenditures	2,021,500	3,058,300	243,670	2,814,630
Excess (Deficiency) of Revenues over Expenditures	139,400	(897,400)	1,767,130	2,664,530
OTHER FINANCING SOURCES (USES)				
Transfers in	-	-	-	-
Transfers out	(69,300)	(69,300)	(84,792)	(15,492)
Total Other Financing Sources (Uses)	(69,300)	(69,300)	(84,792)	(15,492)
Net Change in Fund Balances	70,100	(966,700)	1,682,338	2,649,038
Fund Balances Beginning	17,419,259	17,419,259	17,419,259	-
Fund Balances Ending	$ 17,489,359	$ 16,452,559	$ 19,101,597	$ 2,649,038

NONMAJOR PERMANENT FUNDS

Fund Title	Fund Description
Wetlands Maintenance	Accounts for a $38,000 required endowment from which the income will fund ongoing maintenance of the wetlands on a single lot parcel in Stanford Ranch Phase III.
Conservation Easement Endowment	Accounts for a $453,455 required endowment from which the income will fund initial Preserve Area maintenance and operations.

City of Rocklin
Combining Balance Sheet
Permanent Nonmajor Governmental Funds
June 30, 2024
(With Comparative Totals for June 30, 2023)

	Wetlands Maintenance	Conservation Easement Endowment	Total Permanent Nonmajor Governmental Funds	
			2024	2023
ASSETS				
Restricted cash and investments	$ 55,946	$ 453,455	$ 509,401	$ 508,479
Total assets	$ 55,946	$ 453,455	$ 509,401	$ 508,479
FUND BALANCES				
Nonspendable endowments	$ 38,000	$ 453,455	$ 491,455	$ 491,455
Restricted	17,946	-	17,946	17,024
Total fund balances	$ 55,946	$ 453,455	$ 509,401	$ 508,479

City of Rocklin

Combining Statement of Revenues, Expenditures, and Changes in Fund Balances
Permanent Nonmajor Governmental Funds
For the Year Ended June 30, 2024
(With Comparative Totals for June 30, 2023)

	Wetlands Maintenance	Conservation Easement Endowment	Total Permanent Nonmajor Governmental Funds	
			2024	2023
REVENUES				
Use of money and property	$ 3,522	$ 16,106	$ 19,628	$ 9,085
Total Revenues	3,522	16,106	19,628	9,085
EXPENDITURES				
Total Expenditures	-	-	-	-
Excess (Deficiency) of Revenues over Expenditures	3,522	16,106	19,628	9,085
OTHER FINANCING SOURCES (USES)				
Transfers in	-	-	-	-
Transfers out	(2,600)	(16,106)	(18,706)	(10,984)
Total Other Financing Sources (Uses)	(2,600)	(16,106)	(18,706)	(10,984)
Net Change in Fund Balances	922	-	922	(1,899)
Fund Balances Beginning	55,024	453,455	508,479	510,378
Fund Balances Ending	$ 55,946	$ 453,455	$ 509,401	$ 508,479

City of Rocklin

Schedule of Revenues, Expenditures, and Changes in Fund Balances
Budget and Actual (GAAP Basis)
Permanent Nonmajor Governmental Funds
For the Year Ended June 30, 2024

	Wetlands Maintenance			
	Budgeted Amounts			Variance with Final Budget Positive (Negative)
	Original	Final	Actual Amounts	
REVENUES				
Use of money and property	$ 2,600	$ 2,600	$ 3,522	$ 922
Total Revenues	2,600	2,600	3,522	922
EXPENDITURES				
Total Expenditures	-	-	-	-
Excess (Deficiency) of Revenues over Expenditures	2,600	2,600	3,522	922
OTHER FINANCING SOURCES (USES)				
Transfers in	-	-	-	-
Transfers out	(2,600)	(2,600)	(2,600)	-
Total Other Financing Sources (Uses)	(2,600)	(2,600)	(2,600)	-
Net Change in Fund Balances	-	-	922	922
Fund Balances Beginning	55,024	55,024	55,024	-
Fund Balances Ending	$ 55,024	$ 55,024	$ 55,946	$ 922

Continued

City of Rocklin

Schedule of Revenues, Expenditures, and Changes in Fund Balances
Budget and Actual (GAAP Basis)
Permanent Nonmajor Governmental Funds
For the Year Ended June 30, 2024

	Conservation Easement Endowment			
	Budgeted Amounts			Variance with Final Budget Positive (Negative)
	Original	Final	Actual Amounts	
REVENUES				
Use of money and property	$ 11,500	$ 11,500	$ 16,106	$ 4,606
Total Revenues	11,500	11,500	16,106	4,606
EXPENDITURES				
Total Expenditures	-	-	-	-
Excess (Deficiency) of Revenues over Expenditures	11,500	11,500	16,106	4,606
OTHER FINANCING SOURCES (USES)				
Transfers in	-	-	-	-
Transfers out	(11,500)	(11,500)	(16,106)	(4,606)
Total Other Financing Sources (Uses)	(11,500)	(11,500)	(16,106)	(4,606)
Net Change in Fund Balances	-	-	-	-
Fund Balances Beginning	453,455	453,455	453,455	-
Fund Balances Ending	$ 453,455	$ 453,455	$ 453,455	$ -

Concluded

This page is intentionally blank

NONMAJOR DEBT SERVICE FUNDS

Fund Title	Fund Description
Capital Construction Debt Service Fund	Accounts for the debt service related to City capital projects.
Rocklin Public Financing Authority Debt Service Fund	Accounts for the debt service of the Rocklin Public Financing Authority.

City of Rocklin
Combining Balance Sheet
Debt Service Nonmajor Governmental Funds
June 30, 2024
(With Comparative Totals for June 30, 2023)

	Capital Construction Debt Service Fund	Rocklin Public Financing Authority Debt Service Fund	Total Debt Service Funds	
			2024	2023
ASSETS				
Cash and investments	$ -	$ 7,456	$ 7,456	$ 7,200
Restricted cash and investments	193	1,097,547	1,097,740	1,595,184
Total assets	$ 193	$ 1,105,003	$ 1,105,196	$ 1,602,384
FUND BALANCES				
Restricted	$ 193	$ 1,105,003	$ 1,105,196	$ 1,602,384
Total fund balances	$ 193	$ 1,105,003	$ 1,105,196	$ 1,602,384

City of Rocklin

Combining Statement of Revenues, Expenditures, and Changes in Fund Balances
Debt Service Nonmajor Governmental Funds
For the Year Ended June 30, 2024
(With Comparative Totals for June 30, 2023)

	Capital Construction Debt Service Fund	Rocklin Public Financing Authority Debt Service Fund	Total Debt Service Funds	
			2024	2023
REVENUES				
Use of money and property	$ 748	$ 28,543	$ 29,291	$ 39,660
Total Revenues	748	28,543	29,291	39,660
EXPENDITURES				
Current:				
General government	2,500	-	2,500	2,605
Debt service:				
Principal	300,000	497,623	797,623	771,348
Interest, fiscal charges and fees	229,850	28,116	257,966	283,415
Total Expenditures	532,350	525,739	1,058,089	1,057,368
Excess (Deficiency) of Revenues over Expenditures	(531,602)	(497,196)	(1,028,798)	(1,017,708)
OTHER FINANCING SOURCES (USES)				
Transfers in	531,610	-	531,610	531,839
Transfers out	-	-	-	-
Total Other Financing Sources (Uses)	531,610	-	531,610	531,839
Net Change in Fund Balances	8	(497,196)	(497,188)	(485,869)
Fund Balances Beginning	185	1,602,199	1,602,384	2,088,253
Fund Balances Ending	$ 193	$ 1,105,003	$ 1,105,196	$ 1,602,384

City of Rocklin
Schedule of Revenues, Expenditures, and and Changes in Fund Balances
Budget and Actual (GAAP Basis)
Debt Service Nonmajor Governmental Funds
For the Year Ended June 30, 2024

	Capital Construction Debt Service Fund			
	Budgeted Amounts			Variance with Final Budget Positive (Negative)
	Original	Final	Actual Amounts	
REVENUES				
Use of money and property	$ -	$ -	$ 748	$ 748
Total Revenues	-	-	748	748
EXPENDITURES				
Current:				
General government	2,900	2,900	2,500	400
Debt service:				
Principal retirement	300,000	300,000	300,000	-
Interest and fiscal charges	229,900	229,900	229,850	50
Total Expenditures	532,800	532,800	532,350	450
Excess (Deficiency) of Revenues over Expenditures	(532,800)	(532,800)	(531,602)	1,198
OTHER FINANCING SOURCES (USES)				
Transfers in	532,800	532,800	531,610	(1,190)
Transfers out	-	-	-	-
Total Other Financing Sources (Uses)	532,800	532,800	531,610	(1,190)
Net Change in Fund Balances	-	-	8	8
Fund Balances Beginning	185	185	185	-
Fund Balances Ending	$ 185	$ 185	$ 193	$ 8

Continued

City of Rocklin
Schedule of Revenues, Expenditures, and and Changes in Fund Balances
Budget and Actual (GAAP Basis)
Debt Service Nonmajor Governmental Funds
For the Year Ended June 30, 2024

	Rocklin Public Financing Authority Debt Service Fund			
	Budgeted Amounts		Actual Amounts	Variance with Final Budget Positive (Negative)
	Original	Final		
REVENUES				
Use of money and property	$ 28,200	$ 28,200	$ 28,543	$ 343
Total Revenues	28,200	28,200	28,543	343
EXPENDITURES				
Current:				
General government	-	-	-	-
Debt service:				
Principal retirement	497,700	497,700	497,623	77
Interest and fiscal charges	28,200	28,200	28,116	84
Total Expenditures	525,900	525,900	525,739	161
Excess (Deficiency) of Revenues over Expenditures	(497,700)	(497,700)	(497,196)	504
OTHER FINANCING SOURCES (USES)				
Transfers in	-	-	-	-
Transfers out	-	-	-	-
Total Other Financing Sources (Uses)	-	-	-	-
Net Change in Fund Balances	(497,700)	(497,700)	(497,196)	504
Fund Balances Beginning	1,602,199	1,602,199	1,602,199	-
Fund Balances Ending	$ 1,104,499	$ 1,104,499	$ 1,105,003	$ 504

Concluded

This page is intentionally blank

INTERNAL SERVICE FUNDS

Fund Title	Fund Description
Fleet Management Internal Service Fund	To account for the cost of maintenance of all City vehicles and hold resources to offset future replacement costs.
Risk Management Internal Service Fund	To account for and finance the risk management functions for the City, which includes: general liability, workers compensation, property damage, dental, vision, and other insurance expenditures and to hold resources for Self-Insured Losses and Disaster Contingency.

City of Rocklin
Statement of Net Position
Internal Service Funds
June 30, 2024
(With Comparative Totals for June 30, 2023)

	Fleet Management Internal Service Fund	Risk Management Internal Service Fund	Total Internal Service Funds	
			2024	2023
ASSETS				
Current assets:				
Cash and investments	$ 7,030,873	$ 8,603,085	$ 15,633,958	$ 13,720,412
Accounts receivable	57,268	-	57,268	-
Inventory and other	47,636	-	47,636	50,567
Total current assets	7,135,777	8,603,085	15,738,862	13,770,979
Non-current assets:				
Capital assets - net	7,067,481	-	7,067,481	6,063,575
Total assets	$ 14,203,258	$ 8,603,085	$ 22,806,343	$ 19,834,554
LIABILITIES				
Current liabilities:				
Accounts payable and accrued liabilities	$ 103,540	$ 31,270	$ 134,810	$ 70,785
Claims payable	-	161,176	161,176	145,345
Compensated absences	9,716	-	9,716	10,475
Total current liabilities	113,256	192,446	305,702	226,605
Non-current liabilities:				
Claims payable	-	2,650,110	2,650,110	2,327,282
Compensated absences	248	-	248	1,233
Total non-current liabilities	248	2,650,110	2,650,358	2,328,515
Total liabilities	$ 113,504	$ 2,842,556	$ 2,956,060	$ 2,555,120
NET POSITION				
Net Investment in capital assets	$ 7,067,481	$ -	$ 7,067,481	$ 6,063,575
Unrestricted	7,022,273	5,760,529	12,782,802	11,215,859
Total net position	$ 14,089,754	$ 5,760,529	$ 19,850,283	$ 17,279,434

City of Rocklin
Statement of Revenues, Expenses and Changes in Fund Net Position
Internal Service Funds
For the Year Ended June 30, 2024
(With Comparative Totals for June 30, 2023)

	Fleet Management Internal Service Fund	Risk Management Internal Service Fund	Total Internal Service Funds 2024	Total Internal Service Funds 2023
OPERATING REVENUES				
Charges for services	$ 2,694,351	4,472,458	$ 7,166,809	$ 5,911,674
Intergovernmental	1,806	-	1,806	2,804
Other revenue	27,360	-	27,360	11,047
Total operating revenues	2,723,517	4,472,458	7,195,975	5,925,525
OPERATING EXPENSES				
Salaries and benefits	507,789	1,883,724	2,391,513	2,266,381
Services and supplies	1,309,945	2,147,061	3,457,006	2,554,476
Depreciation	1,033,923	-	1,033,923	1,003,751
Total operating expenses	2,851,657	4,030,785	6,882,442	5,824,608
Operating income (loss)	(128,140)	441,673	313,533	100,917
NONOPERATING REVENUES (EXPENSES)				
Gain (loss) on sale of assets	45,135	-	45,135	11,000
Investment earnings	238,705	79,926	318,631	136,016
Total nonoperating revenues (expenses)	283,840	79,926	363,766	147,016
Income (loss) before operating transfers	155,700	521,599	677,299	247,933
Transfers in	54,550	-	54,550	898,000
Transfers out	(60,151)	-	(60,151)	(53,500)
Income (loss) before capital contributions	150,099	521,599	671,698	1,092,433
Capital contributions	1,899,151	-	1,899,151	402,595
Change in net position	2,049,250	521,599	2,570,849	1,495,028
Total net position - beginning	12,040,504	5,238,930	17,279,434	15,784,406
Total net position - ending	$ 14,089,754	$ 5,760,529	$ 19,850,283	$ 17,279,434

City of Rocklin
Statement of Cash Flows
Internal Service Funds
For the Year Ended June 30, 2024
(With Comparative Totals for June 30, 2023)

	Fleet Management Internal Service Fund	Risk Management Internal Service Fund	Total Internal Service Funds	
			2024	2023
Cash flows from operating activities:				
Receipts from interfund services provided	$ 2,637,083	$ 4,472,458	$ 7,109,541	$ 5,911,993
Other receipts	29,166	-	29,166	13,851
Payments to suppliers for goods and services	(1,256,138)	(1,799,085)	(3,055,223)	(2,927,388)
Payments to employees for services	(505,701)	(1,883,724)	(2,389,425)	(2,275,292)
Net cash provided (used) by operating activities	904,410	789,649	1,694,059	723,164
Cash flows from noncapital financing activities:				
Interfund transactions	(5,601)	-	(5,601)	844,500
Net cash provided (used) by noncapital financing activities	(5,601)	-	(5,601)	844,500
Cash flows from capital financing activities:				
Purchases (sales) of capital assets - net	(1,992,694)	-	(1,992,694)	(423,782)
Proceeds from capital contributions	1,899,151	-	1,899,151	402,595
Net cash provided (used) by capital financing activities	(93,543)	-	(93,543)	(21,187)
Cash flows from investing activities:				
Investment income received	238,705	79,926	318,631	136,016
Net cash provided (used) by investing activities	238,705	79,926	318,631	136,016
Net increase (decrease) in cash and cash equivalents	1,043,971	869,575	1,913,546	1,682,493
Cash and cash equivalents - beginning	5,986,902	7,733,510	13,720,412	12,037,919
Cash and cash equivalents - ending	$ 7,030,873	$ 8,603,085	$ 15,633,958	$ 13,720,412
Reconciliation of operating income to net cash provided (used) by operating activities:				
Operating income (loss)	$ (128,140)	$ 441,673	$ 313,533	$ 100,917
Adjustments to reconcile operating income (loss) to net cash provided (used) by operating activities:				
Depreciation	1,033,923	-	1,033,923	1,003,751
Change in operating assets and liabilities:				
Accounts receivable	(57,268)	-	(57,268)	319
Inventory	2,931	-	2,931	(2,961)
Accounts payable and accrued liabilities	54,708	9,317	64,025	(15,529)
Claims payable	-	338,659	338,659	(360,303)
Compensated absences	(1,744)	-	(1,744)	(3,030)
Net cash provided (used) by operating activities	$ 904,410	$ 789,649	$ 1,694,059	$ 723,164

CUSTODIAL FUNDS

Fund Title	Fund Description
Community Facilities District No. 3	Accounts for special taxes made on properties to pay for debt issued for infrastructure in the District.
Community Facilities District No. 6	Accounts for special taxes made on properties to pay for debt issued for infrastructure in the District.
Community Facilities District No. 7	Accounts for special taxes made on properties to pay for debt issued for infrastructure in the District.
Community Facilities District No. 8	Accounts for special taxes made on properties to pay for debt issued for infrastructure in the District.
Community Facilities District No. 9	Accounts for special taxes made on properties to pay for debt issued for infrastructure in the District.
Community Facilities District No. 10	Accounts for special taxes made on properties to pay for debt issued for infrastructure in the District.
Community Facilities District No. 11	Accounts for special taxes made on properties to pay for debt issued for infrastructure in the District.
North West Rocklin Annexation Area Trust	Accounts for amounts collected to reimburse developers for constructing backbone infrastructure in the respective area.

City of Rocklin

Combining Statement of Fiduciary Net Position
Custodial Funds
June 30, 2024
(With Comparative Totals for June 30, 2023)

	Community Facilities District No. 3	Community Facilities District No. 6	Community Facilities District No. 7
ASSETS			
Current assets:			
Cash and investments	$ 416	$ 114,832	$ 47,351
Cash and investments held by trustee	-	-	-
Receivables	-	837	-
Total assets	$ 416	$ 115,669	$ 47,351
NET POSITION			
Restricted for individuals, organizations, and other governments	$ 416	$ 115,669	$ 47,351
Total net position	$ 416	$ 115,669	$ 47,351

Continued

City of Rocklin

Combining Statement of Fiduciary Net Position
Custodial Funds
June 30, 2024
(With Comparative Totals for June 30, 2023)

	Community Facilities District No. 8	Community Facilities District No. 9	Community Facilities District No. 10
ASSETS			
Current assets:			
Cash and investments	$ 223,243	$ 262,994	$ 3,643,963
Cash and investments held by trustee	-	-	3,563,895
Receivables	1,420	2,519	27,862
Total assets	$ 224,663	$ 265,513	$ 7,235,720
NET POSITION			
Restricted for individuals, organizations, and other governments	$ 224,663	$ 265,513	$ 7,235,720
Total net position	$ 224,663	$ 265,513	$ 7,235,720

Continued

City of Rocklin

Combining Statement of Fiduciary Net Position
Custodial Funds
June 30, 2024
(With Comparative Totals for June 30, 2023)

	Community Facilities District No. 11	Northwest Rocklin Annexation Area Trust	Totals	
			2024	2023
ASSETS				
Current assets:				
Cash and investments	$ 943,499	$ 16,110	$ 5,252,408	$ 4,839,666
Cash and investments held by trustee	545,495	-	4,109,390	4,083,337
Receivables	38,200	-	70,838	82,637
Total assets	$ 1,527,194	$ 16,110	$ 9,432,636	$ 9,005,640
NET POSITION				
Restricted for individuals, organizations, and other governments	$ 1,527,194	$ 16,110	$ 9,432,636	$ 9,005,640
Total net position	$ 1,527,194	$ 16,110	$ 9,432,636	$ 9,005,640

Concluded

City of Rocklin

Combining Statement of Changes in Fiduciary Net Position
Custodial Funds
For the Year Ended June 30, 2024
(With Comparative Totals for June 30, 2023)

	Community Facilities District No. 3	Community Facilities District No. 6	Community Facilities District No. 7
ADDITIONS			
Taxes collected for community facilities districts	$ -	$ 93,316	$ -
Investment earnings	-	2,557	1,624
Other revenue	-	216	-
Total additions	-	96,089	1,624
DEDUCTIONS			
Professional services	-	13,000	-
Program supplies and materials	-	-	-
Fees and charges	-	935	-
Debt service principal	-	74,611	-
Debt service interest	-	4,216	-
Payments to City	-	-	-
Total deductions	-	92,762	-
Change in net position	-	3,327	1,624
Total net position - beginning	416	112,342	45,727
Total net position - ending	$ 416	$ 115,669	$ 47,351

Continued

City of Rocklin

Combining Statement of Changes in Fiduciary Net Position
Custodial Funds
For the Year Ended June 30, 2024
(With Comparative Totals for June 30, 2023)

	Community Facilities District No. 8	Community Facilities District No. 9	Community Facilities District No. 10
ADDITIONS			
Taxes collected for community facilities districts	$ 225,571	$ 261,592	$ 3,250,746
Investment earnings	3,738	4,519	269,269
Other revenue	347	621	6,491
Total additions	229,656	266,732	3,526,506
DEDUCTIONS			
Professional services	13,000	13,400	45,700
Program supplies and materials	-	-	-
Fees and charges	2,263	2,614	32,506
Debt service principal	193,093	229,918	940,000
Debt service interest	10,910	12,990	2,161,425
Payments to City	-	-	-
Total deductions	219,266	258,922	3,179,631
Change in net position	10,390	7,810	346,875
Total net position - beginning	214,273	257,703	6,888,845
Total net position - ending	$ 224,663	$ 265,513	$ 7,235,720

Continued

City of Rocklin

Combining Statement of Changes in Fiduciary Net Position
Custodial Funds
For the Year Ended June 30, 2024
(With Comparative Totals for June 30, 2023)

	Community Facilities District No. 11	Northwest Rocklin Annexation Area Trust	Total Custodial Funds 2024	Total Custodial Funds 2023
ADDITIONS				
Taxes collected for community facilities districts	$ 573,979	$ -	$ 4,405,204	$ 4,396,190
Investment earnings	51,735	-	333,442	193,452
Other revenue	3,755	-	11,430	14,065
Total additions	629,469	-	4,750,076	4,603,707
DEDUCTIONS				
Professional services	21,900	-	107,000	107,700
Program supplies and materials	-	-	-	6,683
Fees and charges	5,799	-	44,117	43,171
Debt service principal	380,000	-	1,817,622	2,978,677
Debt service interest	164,800	-	2,354,341	2,293,035
Payments to City	-	-	-	8,238
Total deductions	572,499	-	4,323,080	5,437,504
Change in net position	56,970	-	426,996	(833,797)
Total net position - beginning	1,470,224	16,110	9,005,640	9,839,437
Total net position - ending	$ 1,527,194	$ 16,110	$ 9,432,636	$ 9,005,640

Concluded

This page is intentionally blank

ROCKLIN

CALIFORNIA

STATISTICAL INFORMATION

This page is intentionally blank

STATISTICAL SECTION

This part of the City of Rocklin's annual comprehensive financial report presents detailed information as a context for understanding what the information in the financial statements, footnotes, and required supplementary information says about the City's overall financial health.

Contents	Page(s)
Financial Trends	
These schedules contain trend information to help the reader understand how the City's financial performance and well-being have changed over time.	185-194
Revenue Capacity	
These schedules contain information to help the reader assess the City's property	195-197
Debt Capacity	
These schedules contain information to help the reader assess the affordability of the City's current levels of outstanding debt and the City's ability to issue additional debt in the future.	198-199
Demographic and Economic Information	
These schedules offer demographic and economic indicators to help the reader understand the environment within which the City's financial activities take place.	200-202

Sources: Unless otherwise noted, the information in these schedules is derived from the annual comprehensive financial reports for the relevant year.

This page is intentionally blank

Table 1

City of Rocklin

Net Position by Component

Last Ten Fiscal Years

(accrual basis of accounting)

	2015	2016	2017	2018	2019
Governmental activities:					
Net investment in capital assets	$ 302,623,713	$ 312,465,313	$ 305,878,169	$ 314,115,482	$ 305,852,202
Restricted	22,509,945	26,651,163	28,671,195	15,238,984	40,348,047
Unrestricted	(7,435,357)	(2,310,614)	4,165,814	5,318,242	2,040,874
Total Governmental Activities Net Position	$ 317,698,301	$ 336,805,862	$ 338,715,178	$ 334,672,708	$ 348,241,123

Page 1 of 2 (continued)

City of Rocklin

Net Position by Component

Last Ten Fiscal Years

(accrual basis of accounting)

	2020	2021	2022	2023	2024
Governmental activities:					
Net investment in capital assets	$ 310,136,678	$ 321,321,668	$ 313,671,890	$ 329,441,747	$ 327,411,118
Restricted	34,989,621	26,027,928	40,765,135	36,012,891	37,577,474
Unrestricted	3,219,038	24,261,106	52,332,480	54,883,778	62,883,042
Total Governmental Activities Net Position	$ 348,345,337	$ 371,610,702	$ 406,769,505	$ 420,338,416	$ 427,871,634

City of Rocklin

Changes in Net Position
Last Ten Fiscal Years
(accrual basis of accounting)

	2015	2016	2017	2018	2019
Expenses					
Governmental Activities:					
General Government	$ 12,774,913	$ 18,001,976	$ 15,594,154	$ 13,624,066	$ 17,129,907
Public Safety	18,646,375	18,957,624	23,573,244	25,317,294	26,650,923
Public works	29,624,287	21,964,264	24,091,079	25,484,445	24,158,972
Parks and Recreation	-	2,623,712	1,680,297	5,156,203	5,727,541
Community Development	2,070,085	2,892,219	3,648,661	5,324,033	5,083,451
Interest Expense	570,731	423,478	997,448	871,020	411,670
Total Governmental Activities Expenses	63,686,391	64,863,273	69,584,883	75,777,061	79,162,464
Total Primary Government Expenses	63,686,391	64,863,273	69,584,883	75,777,061	79,162,464
Program Revenues					
Governmental Activities:					
Charges For Services:					
General Government	1,530,256	1,754,860	1,546,035	2,033,211	1,617,348
Public Safety	1,057,928	1,053,903	1,175,654	1,443,940	1,472,824
Public works	4,805,284	3,176,280	1,123,692	112,424	111,789
Parks and Recreation	-	817,342	817,551	1,884,019	1,262,352
Community Development	3,821,613	5,562,685	6,166,673	8,351,454	6,842,726
Operating Grants and Contributions	5,280,395	11,304,860	8,407,506	5,630,734	5,409,336
Capital Grants and Contributions	185,434	12,126,192	1,979,083	1,502,079	16,661,798
Total Governmental Activities Program Revenues	16,680,910	35,796,122	21,216,194	20,957,861	33,378,173
Total Primary Government Program Revenues	16,680,910	35,796,122	21,216,194	20,957,861	33,378,173
Net (Expense)/Revenue					
Governmental activities	(47,005,481)	(29,067,151)	(48,368,689)	(54,819,200)	(45,784,291)
Total Primary Government Net Expense	(47,005,481)	(29,067,151)	(48,368,689)	(54,819,200)	(45,784,291)

Page 1 of 4 (continued)

City of Rocklin

Changes in Net Position
Last Ten Fiscal Years
(accrual basis of accounting)

	2020	2021	2022	2023	2024
Expenses					
Governmental Activities:					
General Government	$ 18,919,254	$ 13,264,359	$ 10,100,380	$ 17,316,721	$ 16,290,451
Public Safety	27,875,173	31,074,009	26,806,881	33,989,917	38,550,514
Public works	22,608,920	25,316,166	25,268,546	23,913,391	24,692,787
Parks and Recreation	5,232,182	6,195,287	6,657,032	7,390,432	8,181,120
Community Development	4,351,848	4,384,615	3,827,237	5,132,246	6,188,821
Interest Expense	382,640	336,460	299,252	76,403	40,062
Total Governmental Activities Expenses	79,370,017	80,570,896	72,959,328	87,819,110	93,943,755
Total Primary Government Expenses	79,370,017	80,570,896	72,959,328	87,819,110	93,943,755
Program Revenues					
Governmental Activities:					
Charges For Services:					
General Government	637,675	704,469	462,529	604,579	292,593
Public Safety	1,412,661	1,532,092	1,555,297	1,731,051	1,957,215
Public works	123,829	192,839	179,834	142,386	160,087
Parks and Recreation	1,275,472	1,383,594	1,608,690	2,215,373	2,778,285
Community Development	6,260,466	9,260,016	7,144,338	4,684,967	5,592,962
Operating Grants and Contributions	5,283,807	10,405,582	7,627,523	5,844,166	7,613,156
Capital Grants and Contributions	3,481,727	1,647,362	15,325,597	7,822,971	853,139
Total Governmental Activities Program Revenues	18,475,637	25,125,954	33,903,808	23,045,493	19,247,437
Total Primary Government Program Revenues	18,475,637	25,125,954	33,903,808	23,045,493	19,247,437
Net (Expense)/Revenue					
Governmental activities	(60,894,380)	(55,444,942)	(39,055,520)	(64,773,617)	(74,696,318)
Total Primary Government Net Expense	(60,894,380)	(55,444,942)	(39,055,520)	(64,773,617)	(74,696,318)

City of Rocklin

Changes in Net Position
Last Ten Fiscal Years
(accrual basis of accounting)

	2015	2016	2017	2018	2019
General Revenues and Other					
Changes In Net Position					
Governmental Activities:					
Taxes:					
Property Taxes	10,921,437	9,833,055	10,641,721	11,412,312	17,790,239
Sales and Use Taxes	7,576,526	12,868,331	12,951,595	14,142,141	16,980,818
Gas Tax	4,709,456	4,634,924	4,532,443	5,007,488	4,997,713
Transient Occupancy Tax	539,796	572,498	730,719	871,468	1,010,227
Other Taxes	8,402,248	8,959,418	9,510,931	9,643,071	10,398,211
Motor Vehicle Fees	3,891,452	4,218,989	4,505,705	4,783,848	32,079
Franchise Fees	2,059,195	2,123,205	2,119,222	2,174,681	2,227,304
Impact Fees	3,124,079	3,045,750	3,682,003	4,444,008	2,932,544
Investment Earnings	1,789,996	1,879,887	1,453,126	1,273,404	1,920,980
Other Revenues	868,893	727,498	128,143	1,128,526	1,059,860
Gain (Loss) on Sale of Assets	(189,630)	(767,147)	22,397	15,608	2,731
Payments to Agency Funds for Debt Defeasance	-	-	-	(4,605,013)	-
Settlements and recoveries	-	-	-	-	-
Total Governmental Activities	43,693,448	48,096,408	50,278,005	50,291,542	59,352,706
Total Primary Government	43,693,448	48,096,408	50,278,005	50,291,542	59,352,706
Change In Net Position					
Governmental activities	(3,312,033)	19,029,257	1,909,316	(4,527,658)	13,568,415
Total Primary Government	$ (3,312,033)	$ 19,029,257	$ 1,909,316	$ (4,527,658)	$ 13,568,415

Page 3 of 4 (continued)

City of Rocklin

Changes in Net Position
Last Ten Fiscal Years
(accrual basis of accounting)

	2020	2021	2022	2023	2024
General Revenues and Other					
Changes In Net Position					
Governmental Activities:					
Taxes:					
Property Taxes	19,143,185	20,385,991	21,600,498	23,530,699	24,762,287
Sales and Use Taxes	16,316,611	20,742,761	22,024,957	20,283,218	22,202,133
Gas Tax	6,150,082	4,855,477	7,311,965	7,542,652	6,897,034
Transient Occupancy Tax	745,025	688,896	974,865	1,042,949	1,121,843
Other Taxes	11,047,706	12,297,217	14,683,952	15,482,638	16,015,656
Motor Vehicle Fees	54,807	51,597	81,409	73,456	88,058
Franchise Fees	2,267,704	2,351,705	2,443,215	2,615,012	2,790,010
Impact Fees	3,399,165	3,395,078	2,734,639	806,825	2,077,299
Investment Earnings	2,254,102	408,164	(654,681)	2,904,931	5,658,816
Other Revenues	471,755	918,842	2,895,645	293,924	571,316
Gain (Loss) on Sale of Assets	(851,548)	13,250	117,859	11,000	45,084
Payments to Agency Funds for Debt Defeasance	-	-	-	-	-
Settlements and recoveries	-	-	-	3,755,224	-
Total Governmental Activities	60,998,594	66,108,978	74,214,323	78,342,528	82,229,536
Total Primary Government	60,998,594	66,108,978	74,214,323	78,342,528	82,229,536
Change In Net Position					
Governmental activities	104,214	10,664,036	35,158,803	13,568,911	7,533,218
Total Primary Government	$ 104,214	$ 10,664,036	$ 35,158,803	$ 13,568,911	$ 7,533,218

Page 4 of 4 (concluded)

Table 3

City of Rocklin

Fund Balances of Governmental Funds
Last Ten Fiscal Years
(modified accrual basis of accounting)

	2015	2016	2017	2018	2019
General Fund:					
Nonspendable	$ 1,408,708	$ 1,408,708	$ 1,408,708	$ 1,057,689	$ 226,617
Committed	26,094,211	23,292,378	23,788,872	24,928,400	24,830,167
Unassigned	6,667,356	8,360,590	8,277,801	8,528,815	13,157,856
Total General Fund	34,170,275	33,061,676	33,475,381	34,514,904	38,214,640
All Other Governmental Funds:					
Nonspendable	13,043,086	13,757,503	15,437,725	11,398,703	491,455
Restricted	21,804,777	23,287,775	35,084,069	19,018,164	43,404,491
Committed	3,645,358	2,664,534	5,050,480	11,660,760	13,562,550
Unassigned	(2,613,160)	(3,836,388)	(3,714,759)	(1,489,422)	(399,667)
Total All Other Governmental Funds	35,880,061	35,873,424	51,857,515	40,588,205	57,058,829
Total All Governmental Funds	$ 70,050,336	$ 68,935,100	$ 85,332,896	$ 75,103,109	$ 95,273,469

Page 1 of 2 (continued)

City of Rocklin

Fund Balances of Governmental Funds
Last Ten Fiscal Years
(modified accrual basis of accounting)

	2020	2021	2022	2023	2024
General Fund:					
Nonspendable	$ 89,773	$ 78,115	$ 54,901	$ 60,979	$ 52,130
Committed	15,579,960	16,818,145	26,408,553	35,198,542	33,135,509
Unassigned	12,255,196	20,424,550	21,575,015	18,960,635	28,282,984
Total General Fund	27,924,929	37,320,810	48,038,469	54,220,156	61,470,623
All Other Governmental Funds:					
Nonspendable	491,455	491,455	491,455	491,455	491,455
Restricted	34,861,603	25,536,473	40,273,680	35,521,436	37,086,019
Committed	16,672,706	21,942,981	25,987,868	27,218,152	31,604,067
Unassigned	(731,310)	(345,365)	(2,210,385)	(1,604,633)	(1,463,463)
Total All Other Governmental Funds	51,294,454	47,625,544	64,542,618	61,626,410	67,718,078
Total All Governmental Funds	$ 79,219,383	$ 84,946,354	$ 112,581,087	$ 115,846,566	$ 129,188,701

Page 2 of 2 (concluded)

Table 4

City of Rocklin

Changes in Fund Balances of Governmental Funds
Last Ten Fiscal Years
(modified accrual basis of accounting)

	2015	2016	2017	2018	2019
Revenues					
Taxes and ssessments	$ 37,896,309	$ 40,369,523	$ 46,579,731	$ 47,254,480	$ 57,209,318
Licenses and permits	2,310,009	3,004,681	3,206,481	3,819,110	3,459,621
Fines and forfeitures	564,913	227,817	378,658	428,674	434,809
Intergovernmental	5,412,142	9,666,864	8,077,195	8,450,768	3,454,813
Charges for services	4,345,836	2,629,221	2,861,823	4,071,862	3,560,821
Use of money and property	2,685,218	2,778,659	2,407,423	2,232,378	2,951,821
Contributions from Community Facilities Districts	-	-	-	-	15,004,585
Contributions from developers and homeowners	2,850,688	4,744,217	2,017,824	2,861,773	1,785,491
Other revenues	4,237,970	6,151,550	5,499,670	6,403,899	5,602,179
Total Revenues	60,303,085	69,572,532	71,028,805	75,522,944	93,463,458
Expenditures					
General government	13,705,937	18,233,061	16,261,455	12,924,203	17,007,146
Public safety	19,489,176	20,460,097	20,758,713	22,357,043	24,431,060
Public works	19,237,232	14,272,425	13,960,714	13,654,648	13,705,894
Parks and recreation	-	1,584,662	1,695,318	4,862,875	5,638,206
Community development	2,228,394	2,963,265	4,041,210	4,941,424	4,851,224
Capital outlay	9,313,759	17,525,161	4,863,869	22,961,872	6,252,105
Debt service:					
Principal	1,070,000	1,110,000	1,160,000	1,811,481	1,069,678
Interest and fiscal charges	584,681	438,478	683,729	691,572	403,221
Total Expenditures	65,629,179	76,587,149	63,425,008	84,205,118	73,358,534
Excess of Revenues Over(Under) Expenditures	(5,326,094)	(7,014,617)	7,603,797	(8,682,174)	20,104,924
Other Financing Sources(Uses)					
Settlements and recoveries	-	-	-	-	-
Transfer from successor agency	-	-	-	-	-
Transfers from (to) internal service funds	362,832	46,600	51,500	57,400	65,436
Defeasance of debt	-	-	(1,401,322)	(5,000,077)	-
Long-term debt proceeds	-	5,852,781	10,143,821	8,000,077	-
Total Other Financing Sources(Uses)	362,832	5,899,381	8,793,999	3,057,400	65,436
Special Items	-	-	-	(4,605,013)	-
Net Change In Fund Balances	$ (4,963,262)	$ (1,115,236)	$ 16,397,796	$ (10,229,787)	$ 20,170,360
Debt Service as Percentage of Noncapital Expenditures	3.0%	2.6%	3.1%	4.1%	2.1%

Page 1 of 2 (continued)

City of Rocklin

Changes in Fund Balances of Governmental Funds
Last Ten Fiscal Years
(modified accrual basis of accounting)

	2020	2021	2022	2023	2024
Revenues					
Taxes and ssessments	$ 59,761,843	$ 66,307,219	$ 71,341,177	$ 71,681,028	$ 75,965,125
Licenses and permits	3,711,150	5,360,470	4,627,174	3,414,000	3,528,288
Fines and forfeitures	360,689	388,974	366,458	297,009	270,272
Intergovernmental	4,695,501	4,014,160	5,538,565	15,049,309	5,680,001
Charges for services	2,972,542	2,867,394	2,875,150	2,450,964	4,144,791
Use of money and property	3,173,650	1,062,862	540,780	4,180,746	7,067,514
Contributions from Community Facilities Districts	-	-	13,000,000	-	-
Contributions from developers and homeowners	1,616,562	2,887,627	1,752,919	7,304,428	3,904,309
Other revenues	4,008,934	3,979,289	3,020,547	565,500	816,789
Total Revenues	80,300,871	86,867,995	103,062,770	104,942,984	101,377,089
Expenditures					
General government	21,348,114	13,919,998	11,024,751	17,432,399	15,785,461
Public safety	28,092,395	30,201,672	30,773,624	32,773,240	33,721,747
Public works	13,959,688	13,504,844	13,503,446	14,083,908	12,647,318
Parks and recreation	5,748,384	6,344,429	6,679,151	7,323,934	7,746,830
Community development	4,525,119	4,326,346	4,582,399	5,033,262	5,618,500
Capital outlay	16,448,706	11,220,053	7,246,514	26,314,448	10,895,962
Debt service:					
Principal	1,241,255	1,295,918	1,326,650	1,294,760	1,317,243
Interest and fiscal charges	434,189	377,010	339,802	332,278	307,494
Total Expenditures	91,797,850	81,190,270	75,476,337	104,588,229	88,040,555
Excess of Revenues Over(Under) Expenditures	(11,496,979)	5,677,725	27,586,433	354,755	13,336,534
Other Financing Sources(Uses)					
Settlements and recoveries	-	-	-	3,755,224	-
Transfer from successor agency	-	-	-	-	-
Transfers from (to) internal service funds	(4,557,107)	49,246	48,300	(844,500)	5,601
Defeasance of debt	-	-	-	-	-
Long-term debt proceeds	-	-	-	-	-
Total Other Financing Sources(Uses)	(4,557,107)	49,246	48,300	2,910,724	5,601
Special Items	-	-	-	-	-
Net Change In Fund Balances	$ (16,054,086)	$ 5,726,971	$ 27,634,733	$ 3,265,479	$ 13,342,135
Debt Service as Percentage of Noncapital Expenditures	2.3%	2.4%	2.4%	2.1%	2.1%

Page 2 of 2 (concluded)

City of Rocklin

Assessed Value of Taxable Property
June 30, 2024
(in thousands of dollars)

	City of Rocklin				
Fiscal Year	Secured	Public Utility	Unsecured	Taxable Assessed Value	Total Direct Tax Rate
2015	7,140,101,337	9,515,170	123,619,076	7,273,235,583	1.00
2016	7,732,821,234	9,209,410	148,270,416	7,890,301,060	1.00
2017	8,254,665,596	9,209,410	159,873,122	8,423,748,128	1.00
2018	8,864,135,830	9,121,300	163,939,388	9,037,196,518	1.00
2019	9,624,788,062	9,121,300	175,233,065	9,809,142,427	1.00
2020	10,396,063,477	9,121,300	178,711,195	10,583,895,972	1.00
2021	11,019,162,123	9,121,300	191,718,373	11,220,001,796	1.00
2022	11,676,833,963	10,121,900	193,673,828	11,880,629,691	1.00
2023	12,640,035,325	10,121,900	202,882,065	12,853,039,290	1.00
2024	13,436,280,310	10,121,900	226,415,337	13,672,817,547	1.00

Source: Placer County Assessor's Office

City of Rocklin

Direct and Overlapping Property Tax Rates
June 30, 2024
(Rate per $100 of assessed valuation)

	Direct Rates		Overlapping Rates						
Fiscal Year	Basic Rate	Total Direct	Loomis Elementary	Placer Union High	Rocklin Unified School District	Roseville Elementary	Roseville High	Sierra College	Total Tax Rate
2015	1.000	1.000	0.020	0.019	0.136	0.046	0.048	0.000	1.270
2016	1.000	1.000	0.020	0.015	0.134	0.043	0.045	0.000	1.258
2017	1.000	1.000	0.016	0.024	0.039	0.044	0.050	0.000	1.173
2018	1.000	1.000	0.016	0.026	0.142	0.012	0.052	0.000	1.247
2019	1.000	1.000	0.014	0.024	0.118	0.010	0.044	0.000	1.210
2020	1.000	1.000	0.014	0.045	0.109	0.010	0.048	0.016	1.242
2021	1.000	1.000	0.012	0.044	0.104	0.010	0.042	0.015	1.227
2022	1.000	1.000	0.013	0.047	0.094	0.010	0.035	0.014	1.212
2023	1.000	1.000	0.011	0.049	0.080	0.009	0.034	0.019	1.202
2024	1.000	1.000	0.001	0.041	0.090	0.009	0.013	0.015	1.169

Source: Placer County Assessor Tax Rate Table

City of Rocklin

Principal Property Tax Payers
Current Year and Nine Years Ago

		2024			2015		
Taxpayer	Primary Land Use	(1) Taxable Assessed Valuation	Rank	Percentage of Total Assessed Valuation	Taxable Assessed Valuation	Rank	Percentage of Total Assessed Valuation
Meridian Apartments LP	Residential	$ 83,369,424	1	0.61%			
Rhino Holdings Blue Oaks LLC	Commercial	74,256,000	2	0.54%			
PF Portfolio 2 LP	Commercial	64,781,980	3	0.47%			
TCG Rocklin Campus LLC	Institutional	62,443,439	4	0.46%			
Garnet Creek LLC	Residential	58,929,084	5	0.43%			
Winsted Apartments LP	Residential	41,559,358	6	0.30%			
Demmon Rocklin Ranch Partners LP	Residential	41,263,425	7	0.30%			
Walmart Real Estate Business Trust	Commercial	40,008,574	8	0.29%			
Sequoia Equities Shaliko	Residential	39,521,441	9	0.29%			
G W Williams Company	Residential	38,986,870	10	0.29%			
Meridian Apartments LP	Residential				70,894,337	1	0.97%
MGP X Properties LLC	Commercial				64,928,426	2	0.89%
Walmart Real Estate Business Trust	Commercial				38,321,151	3	0.53%
Demmon Rocklin Ranch Partners LP	Residential				34,495,434	4	0.47%
Sunset Court at Stanford Ranch-344 LLC	Residential				32,110,306	5	0.44%
ARHC Carocca01	Institutional				29,333,330	6	0.40%
United Natural Foods Inc.	Industrial				28,722,010	7	0.39%
Montessa Management LP	Residential				28,247,551	8	0.39%
Winstead Partners LLC	Residential				26,221,766	9	0.36%
Williams Portfolio 8	Residential				24,723,560	10	0.34%
Totals		$ 545,119,595		3.99%	$ 377,997,871		5.20%

Source(s): HdL Coren and Cone and Placer County Assessor Combined Tax Rolls and the SBE Non Unitary Tax Roll and Placer County Assessor 2023/2024 Combined Tax Rolls and the SBE Non Unitary Tax Roll.

(1) Estimated calculations are performed on a parcel level, county/controllers' office neither calculates nor apportions revenues at a parcel level.

City of Rocklin
Direct and Overlapping Debt
June 30, 2024

2023/2024 Assessed Valuation:	$ 13,673,458,824		
Overlapping Tax and Assessment Debt:	Total Debt	% Applicable (1)	City's Share of Debt
Sierra Joint Community College District School Facilities Improvement Dist No. 4	$ 201,485,000	15.053%	$ 30,329,537
Rocklin Unified School District	21,183,144	99.051%	20,982,116
Placer Union High School District	54,872,325	3.317%/8.979%	3,967,712
Roseville Joint Union High School District	97,157,578	0.060%	58,295
Loomis Union School District	100,000	11.776%	11,776
Roseville City School District	7,780,272	0.099%	7,702
Rocklin Unified School District Community Facilities District No. 1	5,026,101	100%	5,026,101
Rocklin Unified School District Community Facilities District No. 2	5,540,373	100%	5,540,373
Rocklin Unified School District Community Facilities District No. 3	24,265,000	100%	24,265,000
City of Rocklin Community Facilities District No. 6	154,312	100%	154,312
City of Rocklin Community Facilities District No. 8	399,355	100%	399,355
City of Rocklin Community Facilities District No. 9	475,517	100%	475,517
City of Rocklin Community Facilities District No. 10	48,160,000	100%	48,160,000
City of Rocklin Community Facilities District No. 11	3,710,000	100%	3,710,000
California Municipal Finance Authority Community Facilities District No. 2020-5	2,810,000	100%	2,810,000
California Municipal Finance Authority Community Facilities District No. 2022-9	615,000	100%	615,000
California Municipal Finance Authority Community Facilities District No. 2022-10	3,500,000	100%	3,500,000
California Statewide Community Development Authority 1915 Act Bonds	15,777,945	100%	15,777,945
Total overlapping tax and assessment debt			$ 165,790,741
Direct and Overlapping General Fund Debt:			
Placer County General Fund Obligations	$ 77,190,000	13.034%	$ 10,060,945
Sierra Joint Community College District Certificates of Participation	406,000	9.991%	40,563
Rocklin Unified School District General Fund Obligations	18,184,000	99.051%	18,011,434
Roseville Joint Union High School District Certificates of Participation	59,375,000	0.060%	35,625
Roseville City School District General Fund Obligations	5,543,819	0.099%	5,488
City of Rocklin Lease Revenue Bonds	7,080,000	100%	7,080,000
City of Rocklin Direct Borrowings	1,627,744	100%	1,627,744
South Placer Fire Protection District Certificates of Participation	4,350,000	0.862%	37,497
Placer Mosquito & Vector Control District General Fund Obligations	1,566,000	13.034%	204,112
Total direct and overlapping general fund debt			$ 37,103,408
Overlapping Tax Increment Debt (Successor Agency)	$ 15,310,000	100%	$ 15,310,000
Total direct debt			**$ 8,707,744**
Total overlapping debt			$ 209,496,405
Combined Total Debt			$ 218,204,149 (2)
Ratios to Assessed Valuation:			
Total Overlapping Tax and Assessment Debt		1.21%	
Total Direct Debt		0.06%	
Combined Total Debt		1.60%	
Ratios to Redevelopment Successor Agency Incremental Valuation ($1,453,740,459):			
Total Overlapping Tax Increment Debt		1.05%	

(1) The percentage of overlapping debt applicable to the city is estimated using taxable assessed property value. Applicable percentages were estimated by determining the portion of the overlapping district's assessed value that is within the boundaries of the city divided by the district's total taxable assessed value.
(2) Excludes tax and revenue anticipation notes, enterprise revenue, mortgage revenue, and non-bonded capital lease obligations.

Source: California Municipal Statistics, Inc.

City of Rocklin

Pledged-Revenue Coverage
Last Ten Fiscal Years

	2015	2016	2017	2018	2019	2020	2021	2022	2023	2024
Lease Revenue Bonds										
Police Building Lease Revenue	$ -	$ -	$ -	$ 513,939	$ 458,034	$ 418,322	$ 531,537	$ 530,918	$ 531,840	$ 531,610
Debt service:										
Principal	-	-	-	495,000	520,000	245,000	260,000	270,000	285,000	300,000
Interest	-	-	180,973	328,725	303,350	284,225	271,600	258,350	244,475	229,850
Total	-	-	180,973	823,725	823,350	529,225	531,600	528,350	529,475	529,850
Coverage	-	-	-	0.62	0.56	0.79	1.00	1.00	1.00	1.00
Certificates of Participation										
Police Building Lease Revenue	$ 539,302	$ 536,454	$ 516,077	n/a	n/a	n/a	n/a	n/a	n/a	n/a
Debt service:										
Principal	450,000	465,000	485,000	n/a	n/a	n/a	n/a	n/a	n/a	n/a
Interest	89,305	71,455	31,078	n/a	n/a	n/a	n/a	n/a	n/a	n/a
Total	539,305	536,455	516,078	n/a	n/a	n/a	n/a	n/a	n/a	n/a
Coverage	1.00	1.00	1.00	n/a	n/a	n/a	n/a	n/a	n/a	n/a

Note: Certificates of Participation were refunded with Lease Revenue Bonds on 11/1/2016. Lease Revenue Bonds have cash from refunding to apply towards interest. Details regarding the city's outstanding debt can be found in the notes to the financial statements.

City of Rocklin

Principal Employers - Top 10
Current Year and Nine Years Ago

	2024			2015		
Employer	Number of Employees	Rank	Percent of Total Employment	Number of Employees	Rank	Percent of Total Employment
Sierra Joint Community College District	1,200	1	27.72%	480	5	10.16%
Scher Corporation	663	2	15.32%			
Oracle America, Inc.	500	3	11.55%	800	2	16.94%
American Healthcare Administrative Services, Inc.	490	4	11.32%			
United Natural Foods West, Inc. (UNFI)	385	5	8.89%	700	3	14.82%
Pacific Secured Equities	300	6	6.93%			
JELD-WEN	211	7	4.87%			
Educational Media Foundation (K-LOVE Radio)	200	8	4.62%	300	7	6.35%
SMA Solar Technology	200	9	4.62%			
Verifone	180	10	4.16%			
Esurance Insurance Services, Inc.				520	4	11.01%
Walmart				325	6	6.88%
UPS				276	8	5.84%
Pacific Gas & Electric (PG&E)				200	10	4.23%
Rocklin Unified School District				860	1	18.21%
City of Rocklin				262	9	5.55%
Total	4,329		100%	4,723		100%

Source: Lightcast, ESRI and D&B Hoovers
Note: Number of Employees are self-reported by Employers.

City of Rocklin

Operating Indicators By Function
Last Ten Fiscal Years

	2015	2016	2017	2018	2019	2020	2021	2022	2023	2024
Function:										
Public Safety										
911 Calls processed	13,810	15,322	18,638	17,271	18,215	18,736	20,184	18,437	18,837	Note 3
Officer initiated activity	25,048	21,008	21,221	23,018	25,801	18,524	20,634	19,714	20,547	Note 3
Felony arrests	310	291	306	253	241	295	301	373	383	Note 3
Misdemeanor arrests	838	782	740	922	893	647	760	842	744	Note 3
Citations issued	3,607	3,317	2,704	3,648	3,701	2,190	3,091	3,047	2,906	Note 3
Community Development										
Building Permits Issued- SFR[1]	389	536	671	585	439	422	462	208	155	130
Building Permits Issued- MFR Units[2]	310	178	319	-	-	-	195	351	56	-
Building Permits Issued- Commercial	69	65	58	45	37	20	47	48	34	24
Building Permits Issued- Pools	138	163	142	176	182	209	227	211	125	58

Notes:
(1) SFR-Single Family Residences
(2) Multi-Family Residences by number of housing units
(3) Statistics not available at time of report. Police Annual Report available online in the Spring after year end.

Source: City of Rocklin Annual Police Report, City of Rocklin Building Activity Reports

City of Rocklin

Capital Asset Statistics By Function
Last Ten Fiscal Years

	2015	2016	2017	2018	2019	2020	2021	2022	2023	2024
Function:										
General Government										
Number of buildings	2	2	2	2	2	2	2	2	2	2
Public Safety										
Police Stations	1	1	1	1	1	1	1	1	1	1
Fire stations	3	3	3	3	3	3	3	3	3	3
General Services										
Miles of streets	190	196	197	198	201	207	211	214	215	237
Number of street lights	5,133	5,301	5,317	5,339	5,343	5,445	5,585	5,632	5,645	5,669
Miles of off-street bikeways	24	26	26	26	26	26	26	26	31	39
Recreation										
Parks	32	33	34	36	36	37	37	37	37	37
Community centers	2	2	2	2	2	2	2	2	2	2

Source City of Rocklin Finance Division

CITY OF ROCKLIN, CALIFORNIA

APPROPRIATIONS LIMIT SCHEDULE AND INDEPENDENT ACCOUNTANT'S REPORT

For the Year ended June 30, 2024

* * *

Chavan & Associates, LLP
Certified Public Accountants
16450 Monterey Rd, Suite 5
Morgan Hill, CA 95037

CITY OF ROCKLIN, CALIFORNIA

APPROPRIATIONS LIMIT SCHEDULE AND INDEPENDENT ACCOUNTANT'S REPORT

FOR THE YEAR ENDED JUNE 30, 2024

TABLE OF CONTENTS

	PAGE NO.
INDEPENDENT ACCOUNTANT'S REPORT	1 - 2
APPROPRIATIONS LIMIT SCHEDULE	3
NOTES TO THE APPROPRIATIONS LIMIT SCHEDULE	4

Chavan and Associates, llp
Certified Public Accountants

Independent Accountant's Report on Applying Agreed-Upon Procedures Related to the Article XIII-B Appropriations Limit

To the Honorable Mayor and Members of the
City Council of the City of Rocklin
Rocklin, California

We have performed the procedures enumerated below to the accompanying Appropriations Limit Schedule of the City of Rocklin, (the City), for the year ended June 30, 2024.

The City's management is responsible for the appropriations limit calculation for the year ended June 30, 2024. The City has agreed to and acknowledged that the procedures performed are appropriate to meet the intended purpose of assisting the City in evaluating the appropriations limit calculation in accordance with the requirements of Section 1.5 of Article XIIB of the California Constitution. The procedures are recommended by the California Committee on Municipal Accounting (as presented in the CCMA White Paper titled Agreed-upon Procedures Applied to the Appropriations Limitation Prescribed by Article XIII-B of the California Constitution). This report may not be suitable for any other purpose. The procedures performed may not address all the items of interest to a user of this report and may not meet the needs of all users of this report and, as such, users are responsible for determining whether the procedures performed are appropriate for their purposes.

The procedures performed and our findings were as follows:

1. We obtained the completed Appropriations Limit Worksheet for the year ended June 30, 2024 and compared the limit and annual adjustment factors included in the worksheet to those adopted by the resolution of the City Council. We also compared the population and inflation options included in the aforementioned worksheets to those that were selected by a recorded vote of the City Council.

   Findings: No exceptions were noted as result of applying these procedures.

2. For the accompanying Appropriations Limit Schedule, we added the prior year's limit to the total adjustments and agreed the resulting amount to the current year's limit.

   Findings: No exceptions were noted as result of applying these procedures.

3. We agreed the current year information presented in the accompanying Appropriation Limit Schedule to the appropriate supporting worksheets described in No. 1 above.

   Findings: No exceptions were noted as result of applying these procedures.

16450 Monterey Rd, Suite 5 Morgan Hill, CA 95037
Tel: 408-217-8749 • E-Fax: 408-872-4159
info@cnallp.com • www.cnallp.com

4. We agreed the prior year appropriations limit in the accompanying Appropriation Limit Schedule to the prior year appropriations limit adopted by the City Council.

   Findings: No exceptions were noted as result of applying these procedures.

We were engaged by the City to perform this agreed-upon procedures engagement and conducted our engagement in accordance with attestation standards established by the American Institute of Certified Public Accountants. We were not engaged to and did not conduct an examination or review, the objective of which would be the expression of an opinion or conclusion, respectively, on the appropriations limit calculation for the year ended June 30, 2024. Accordingly, we do not express such an opinion or conclusion. Had we performed additional procedures, other matters might have come to our attention that would have been reported to you. No procedures have been performed with respect to the determination of the appropriations limit for the base year, as defined by Article XIII-B of the California Constitution.

We are required to be independent of the City and to meet our other ethical responsibilities, in accordance with the relevant ethical requirements related to our agreed-upon procedures engagement.

This report is intended solely for the information and use of City Council and the City's management, and is not intended to be and should not be used by anyone other than these specified parties..

C & A LLP

November 18, 2024
Morgan Hill, California

16450 Monterey Rd, Suite 5 Morgan Hill, CA 95037
Tel: 408-217-8749 • E-Fax: 408-872-4159
info@cnallp.com • www.cnallp.com

CITY OF ROCKLIN, CALIFORNIA

APPROPRIATIONS LIMIT SCHEDULE
FOR THE YEAR ENDED JUNE 30, 2024

	Amount	Source
A. Appropriations limit for the year ended June 30, 2023	$ 60,070,746	Prior Year Schedule
B. Calculation Factors:		
1. Population increase %	1.0021 [1)]	State Department of Finance
2. Inflation increase %	1.0444	State Department of Finance
3. Total adjustment factor %	1.0466	B1 x B2
C. Annual adjustment Increase (Rounded)	2,799,297	[(B3-1)A)]
D. Other Adjustments:		
Loss responsibility (-)	-	N/A
Transfers to private (-)	-	N/A
Transfers to fees (-)	-	N/A
Assumed responsibility (+)	-	N/A
E. Total Adjustments	2,799,297	(C+D)
F. Appropriations limit for the year ending June 30, 2024	$ 62,870,043	(A+E)

[1)] Greater of population increase % for:

City of Rocklin	0.9934
Placer County	1.0021

NOTES TO THE APPROPRIATIONS LIMIT SCHEDULE
FOR THE YEAR ENDED JUNE 30, 2024

1. PURPOSE OF LIMITED PROCEDURES REVIEW

   Under Article XIIIB of the California Constitution (the Gann Spending Limitations Initiative), California governmental agencies are restricted as to the amount of annual appropriations from proceeds of taxes. Effective for years beginning on or after July 1, 1990, under Section 1.5 of Article XIIB, the annual calculation of the appropriation limit is subject to a limited procedures review in connection with the annual audit.

2. METHOD OF CALCULATION

   Under Section 10.5 of Article XIIIB, for fiscal years beginning on or after July, 1990, the appropriations limit is required to be calculated based on the limit for the fiscal year 1986-87, adjusted for the inflation and population factors discussed in Notes 3 and 4 below.

3. INFLATION FACTORS

   A California governmental agency may adjust its appropriations limit by either the annual percentage change in the 4th quarter per capita personal income (which percentage is supplied by the State Department of Finance) or the percentage change in the local assessment roll from the preceding year due to the change of local nonresidential construction. The factor adopted by the City for the year 2023-24 represents the annual percentage change in the per capita personal income.

4. POPULATION FACTORS

   A California governmental agency may adjust its appropriations limit by either the annual percentage change of the jurisdiction's own population or the annual percentage change in population of the county where the jurisdiction is located. The factor adopted by the City for the year 2023-24 represents the annual percentage change in population for the County.

5. OTHER ADJUSTMENTS

   A California government agency may be required to adjust its appropriations limit when certain events occur, such as the transfer of responsibility for municipal services to, or from, another government agency or private entity.

Chavan and Associates, llp
Certified Public Accountants

To the City Council of the
City of Rocklin

We have audited the basic financial statements of the City of Rocklin as of and for the year ended June 30, 2024, and have issued our report thereon dated November 18, 2024. Professional standards require that we advise you of the following matters relating to our audit.

Our Responsibility under Generally Accepted Auditing Standards and *Government Auditing Standards*

As communicated in our engagement letter, our responsibility, as described by professional standards, is to form and express an opinion(s) about whether the financial statements that have been prepared by management with your oversight are presented fairly, in all material respects, in conformity with accounting principles generally accepted in the United States of America. Our audit of the financial statements does not relieve you or management of your respective responsibilities.

Our responsibility, as prescribed by professional standards, is to plan and perform our audit to obtain reasonable, rather than absolute, assurance about whether the financial statements are free of material misstatement. An audit of financial statements includes consideration of internal control over financial reporting as a basis for designing audit procedures that are appropriate in the circumstances, but not for the purpose of expressing an opinion on the effectiveness of the Authority's internal control over financial reporting. Accordingly, as part of our audit, we considered the internal control of the City of Rocklin solely for the purpose of determining our audit procedures and not to provide any assurance concerning such internal control.

We are also responsible for communicating significant matters related to the audit that are, in our professional judgment, relevant to your responsibilities in overseeing the financial reporting process. However, we are not required to design procedures for the purpose of identifying other matters to communicate to you.

Other Information in Documents Containing Audited Financial Statements

Pursuant to professional standards, our responsibility as auditors for other information in documents containing City of Rocklin's audited financial statements does not extend beyond the financial information identified in the audit report, and we are not required to perform any procedures to corroborate such other information.

Our responsibility also includes communicating to you any information which we believe is a material misstatement of fact. Nothing came to our attention that caused us to believe that such information, or its manner of presentation, is materially inconsistent with the information, or manner of its presentation, appearing in the financial statements.

16450 Monterey Road, Ste #5, Morgan Hill, CA 95037
Tel: 408-217-8749 • E-Fax: 408-872-4159
info@cnallp.com • www.cnallp.com

Planned Scope and Timing of the Audit

We conducted our audit consistent with the planned scope and timing we previously communicated with management.

Compliance with All Ethics Requirements Regarding Independence

The engagement team, others in our firm, as appropriate, and our firm have complied with all relevant ethical requirements regarding independence.

Significant Risks Identified

We did not identify any significant risks that required special audit consideration.

Qualitative Aspects of the Authority's Significant Accounting Practices

Significant Accounting Policies

Management has the responsibility to select and use appropriate accounting policies. A summary of the significant accounting policies adopted by the City of Rocklin is included in Note 1 to the financial statements. There have been no initial selection of accounting policies and no changes in significant accounting policies or their application during June 30, 2024. No matters have come to our attention that would require us, under professional standards, to inform you about (1) the methods used to account for significant unusual transactions and (2) the effect of significant accounting policies in controversial or emerging areas for which there is a lack of authoritative guidance or consensus.

Significant Accounting Estimates

Accounting estimates are an integral part of the financial statements prepared by management and are based on management's current judgments. Those judgments are normally based on knowledge and experience about past and current events and assumptions about future events. Certain accounting estimates are particularly sensitive because of their significance to the financial statements and because of the possibility that future events affecting them may differ markedly from management's current judgments.

The most sensitive accounting estimates affecting the financial statements include actuarial assumptions included in employee retirement plans that impact pension and other postemployment balances reported in the financial statements, and net present value calculations for right of use assets and leases.

We evaluated the key factors and assumptions used to develop the identified estimates and determined that it is reasonable in relation to the basic financial statements taken as a whole and in relation to the applicable opinion units.

16450 Monterey Road, Ste #5, Morgan Hill, CA 95037
Tel: 408-217-8749 • E-Fax: 408-872-4159
info@cnallp.com • www.cnallp.com

Financial Statement Disclosures

Certain financial statement disclosures involve significant judgment and are particularly sensitive because of their significance to financial statement users. The most sensitive disclosures affecting City of Rocklin's financial statements relate to cash and investments, pensions and long-term liabilities.

Significant Unusual Transactions

For purposes of this communication, professional standards require us to communicate to you significant unusual transactions identified during our audit. No significant unusual transactions were identified as a result of our audit procedures that required the attention of management.

Identified or Suspected Fraud

We did not identify nor obtain information that indicates that fraud may have occurred.

Significant Difficulties Encountered during the Audit

We encountered no significant difficulties in dealing with management relating to the performance of the audit.

Uncorrected and Corrected Misstatements

For purposes of this communication, professional standards require us to accumulate all known and likely misstatements identified during the audit, other than those that we believe are trivial, and communicate them to the appropriate level of management. Further, professional standards require us to also communicate the effect of uncorrected misstatements related to prior periods on the relevant classes of transactions, account balances or disclosures, and the financial statements as a whole and each applicable opinion unit. There were no uncorrected financial statement misstatements identified.

In addition, professional standards require us to communicate to you all material, corrected misstatements that were brought to the attention of management as a result of our audit procedures. There were no material, corrected misstatements noted during the audit.

Disagreements with Management

For purposes of this letter, professional standards define a disagreement with management as a matter, whether or not resolved to our satisfaction, concerning a financial accounting, reporting, or auditing matter, which could be significant to the City of Rocklin's financial statements or the auditor's report. No such disagreements arose during the course of the audit.

16450 Monterey Road, Ste #5, Morgan Hill, CA 95037
Tel: 408-217-8749 • E-Fax: 408-872-4159
info@cnallp.com • www.cnallp.com

Circumstances that Affect the Form and Content of the Auditor's Report

For purposes of this letter, professional standards require that we communicate any circumstances that affect the form and content of our auditor's report. There were no circumstances that affect the form and content of our auditor's report.

Representations Requested from Management

We have requested certain written representations from management, which are included in the attached letter dated November 18, 2024.

Management's Consultations with Other Accountants

In some cases, management may decide to consult with other accountants about auditing and accounting matters. Management informed us that, and to our knowledge, there were no consultations with other accountants regarding auditing and accounting matters.

Other Significant Matters, Findings, or Issues

In the normal course of our professional association with the City of Rocklin, we generally discuss a variety of matters, including the application of accounting principles and auditing standards, operating and regulatory conditions affecting the City, and operational plans and strategies that may affect the risks of material misstatement. None of the matters discussed resulted in a condition to our retention as the City of Rocklin's auditors.

This report is intended solely for the information and use of the Board and management of the City of Rocklin and is not intended to be and should not be used by anyone other than these specified parties.

C & A LLP

November 18, 2024
Morgan Hill, California

16450 Monterey Road, Ste #5, Morgan Hill, CA 95037
Tel: 408-217-8749 • E-Fax: 408-872-4159
info@cnallp.com • www.cnallp.com

Chavan and Associates, llp
Certified Public Accountants

City of Rocklin
City Council and Management
Rocklin, California

In planning and performing our audit of the financial statements of City of Rocklin as of and for the year ended June 30, 2024, in accordance with auditing standards generally accepted in the United States of America and the standards applicable to financial audits contained in *Government Auditing Standards*, issued by the Comptroller General of the United States, we considered City of Rocklin's internal control over financial reporting (internal control) as a basis for designing our auditing procedures for the purpose of expressing our opinion on the financial statements, but not for the purpose of expressing an opinion on the effectiveness of City of Rocklin's internal control. Accordingly, we do not express an opinion on the effectiveness of City of Rocklin's internal control over financial reporting.

A deficiency in internal control exists when the design or operation of a control does not allow management or employees, in the normal course of performing their assigned functions, to prevent, or detect and correct misstatements on a timely basis. A material weakness is a deficiency, or a combination of deficiencies, in internal control over financial reporting, such that there is a reasonable possibility that a material misstatement of the entity's financial statements will not be prevented or detected and corrected on a timely basis. A reasonable possibility exists when the likelihood of an event occurring is either reasonably possible or probable as defined as follows:

- *Reasonably possible:* The chance of the future event or events occurring is more than remote but less than likely.

- *Probable*: The future event or events are likely to occur.

Our consideration of internal control was for the limited purpose described in the first paragraph and was not designed to identify all deficiencies in internal control that might be material weaknesses. Given these limitations, during our audit we did not identify any deficiencies in internal control over financial reporting that we consider to be material weaknesses. However, material weaknesses may exist that have not been identified.

Respectfully,

C & A LLP

November 18, 2024
Morgan Hill, California

16450 Monterey Road, Ste #5, Morgan Hill, CA 95037
Tel: 408-217-8749 • E-Fax: 408-872-4159
info@cnallp.com • www.cnallp.com

ROCKLIN
CALIFORNIA

City Council Staff Report

Subject: Fiscal Year 2023/24 Single Audit Report

Date: February 25, 2025

Submitted By: Diane Ahn, Accounting Officer
Daniel Choe, Administrative Services Deputy Director

Department: Administrative Services - Finance

Recommendation:
Adopt a Resolution of the City Council of the City of Rocklin Accepting and Approving the Single Audit Report for the Year Ended June 30, 2024.

Background:
The Single Audit Act of 1984, as amended in 1996, and the Uniform Guidance issued by the Federal Office of Management and Budget in 2014 established requirements for audits of states, local governments and Indian tribal governments that administer federal financial assistance programs. Pursuant to the Uniform Guidance, all non-federal government agencies and nonprofit organizations that expend $750,000 or more in federal awards in a given fiscal year are required to undergo a Single Audit.

The City of Rocklin had federal award expenditures of $2,124,622 during the fiscal year ended June 30, 2024; therefore, a Single Audit is required. This audit also includes reporting on expenditures to the City of Rocklin's Community Development Block Grant (CDBG) program, as well as funds allocated to subrecipients.

A Single Audit, conducted by the auditing firm Chavan & Associates, LLP, for the year ended June 30, 2024, has been completed. The Single Audit Report for the year ended June 30, 2024 has been prepared (Attachment 2). The audit found no internal control weakness or instance of non-compliance. Staff recommends that the City Council adopt a resolution (Attachment 1) to accept the Single Audit for the fiscal year ended June 30, 2024.

Fiscal Impact:
There is no direct fiscal impact to the General Fund from the staff recommendation.

ATTACHMENTS:
1. Resolution
2. Resolution Exhibit A - Single Audit Report 2024

RESOLUTION NO. 2025-

RESOLUTION OF THE CITY COUNCIL OF THE CITY OF ROCKLIN
ACCEPTING AND APPROVING THE SINGLE AUDIT REPORT
FOR THE YEAR ENDED JUNE 30, 2024

WHEREAS, the Single Audit Act of 1984, as amended, and the Uniform Guidance issued by the Office of Management and Budget in 2014 establish requirements for audits of local governments that administer federal financial assistance programs, and require a single audit for the City of Rocklin; and

WHEREAS, a single audit was performed by Chavan & Associates, LLP for the year ended June 30, 2024, and a Single Audit Report prepared, without findings of internal control weakness or instances of non-compliance.

NOW THEREFORE, BE IT RESOLVED by the City Council of the City of Rocklin as follows:

Section 1. The Single Audit Report for the year ended June 30, 2024, attached hereto as Exhibit "A" and by this reference incorporated herein, is accepted and approved.

PASSED AND ADOPTED this 25th day of February, 2025, by the following vote:

AYES: Councilmembers:
NOES: Councilmembers:
ABSENT: Councilmembers:
ABSTAIN: Councilmembers:

_____
Jill Gayaldo, Mayor

ATTEST:

_____
Avinta Singh, City Clerk

CITY OF ROCKLIN, CALIFORNIA

SINGLE AUDIT REPORT

FOR THE YEAR ENDED JUNE 30, 2024

Chavan & Associates, LLP
Certified Public Accountants
16450 Monterey Road, Suite #5
Morgan Hill, CA 95037

CITY OF ROCKLIN, CALIFORNIA
SINGLE AUDIT REPORT
TABLE OF CONTENTS
JUNE 30, 2024

	PAGE NO.
Independent Auditor's Report on Compliance for Each Major Federal Program and Report on Internal Control Over Compliance in Accordance with Uniform Guidance	1
Schedule of Expenditures of Federal Awards	4
Notes to Schedule of Expenditures of Federal Awards	5
Schedule of Findings and Questioned Costs:	
Section I - Summary of Auditor's Results	6
Section II - Financial Statement Findings	7
Section III - Federal Awards Findings and Questioned Costs	7
Summary Schedule of Prior Year Findings	8
Independent Auditor's Report on Internal Control over Financial Reporting and on Compliance and Other Matters Based on an Audit of Financial Statements Performed in Accordance with *Government Auditing Standards*	9

Chavan and Associates, llp
Certified Public Accountants

INDEPENDENT AUDITOR'S REPORT ON COMPLIANCE FOR EACH MAJOR FEDERAL PROGRAM AND REPORT ON INTERNAL CONTROL OVER COMPLIANCE IN ACCORDANCE WITH THE UNIFORM GUIDANCE

To the Honorable Mayor and Members of the
City Council of the City of Rocklin
Rocklin, California

Report on Compliance for Each Major Federal Program

Opinion over Each Major Federal Program

We have audited the City of Rocklin (the City)'s compliance with the types of compliance requirements described in *OMB Compliance Supplement* that could have a direct and material effect on each of the City's major federal programs for the year ended June 30, 2024. The City's major federal programs are identified in the summary of auditor's results section of the accompanying schedule of findings and questioned costs.

In our opinion, the City complied, in all material respects, with the types of compliance requirements referred to above that could have a direct and material effect on each of its major federal programs for the year ended June 30, 2024.

Basis for Opinion on Each Major federal programs

We conducted our audit of compliance in accordance with auditing standards generally accepted in the United States of America (GAAS); the standards applicable to financial audits contained in *Government Auditing Standards* issued by the Comptroller General of the United States (*Government Auditing Standards*); and the audit requirements of Title 2 U.S. *Code of Federal Regulations* Part 200, *Uniform Administrative Requirements, Cost Principles, and Audit Requirements for Federal Awards* (Uniform Guidance). Our responsibilities under those standards and Uniform Guidance are further described in the Auditor's Responsibilities for the Audit of Compliance section of our report.

We are required to be independent of the City and to meet our other ethical responsibilities, in accordance with relevant ethical requirements relating to our audit. We believe that the audit evidence we have obtained is sufficient and appropriate to provide a basis for our opinion on compliance for each major federal programs. Our audit does not provide a legal determination of the City 's compliance with the compliance requirements referred to above.

Responsibilities of Management for Compliance

Management is responsible for compliance with the requirements referred to above and for the design, implementation, and maintenance of effective internal control over compliance with the requirements of laws, statutes, regulations, rules and provisions of contracts or grant agreements applicable to the City's federal programs.

16450 Monterey Rd., Suite 5, Morgan Hill, CA 95037
Tel: 408-217-8749 • E-Fax: 408-872-4159
info@cnallp.com • www.cnallp.com

Auditor's Responsibilities for the Audit of Compliance

Our objectives are to obtain reasonable assurance about whether material noncompliance with the compliance requirements referred to above occurred, whether due to fraud or error, and express an opinion on the City's compliance based on our audit. Reasonable assurance is a high level of assurance but is not absolute assurance and therefore is not a guarantee that an audit conducted in accordance with GAAS, Government Auditing Standards, and the Uniform Guidance will always detect material noncompliance when it exists. The risk of not detecting material noncompliance resulting from fraud is higher than for that resulting from error, as fraud may involve collusion, forgery, intentional omissions, misrepresentations, or the override of internal control. Noncompliance with the compliance requirements referred to above is considered material, if there is a substantial likelihood that, individually or in the aggregate, it would influence the judgment made by a reasonable user of the report on compliance about the City's compliance with the requirements of each major federal programs.

In performing an audit in accordance with GAAS, Government Auditing Standards, and the Uniform Guidance, we:

- Exercise professional judgment and maintain professional skepticism throughout the audit.
- Identify and assess the risks of material noncompliance, whether due to fraud or error, and design and perform audit procedures responsive to those risks. Such procedures include examining, on a test basis, evidence regarding the City's compliance with the compliance requirements referred to above and performing such other procedures as we considered necessary in the circumstances.
- Obtain an understanding of the City's internal control over compliance relevant to the audit in order to design audit procedures that are appropriate in the circumstances and to test and report on internal control over compliance in accordance with the Uniform Guidance, but not for the purpose of expressing an opinion on the effectiveness of the City's internal control over compliance. Accordingly, no such opinion is expressed.

We are required to communicate with those charged with governance regarding, among other matters, the planned scope and timing of the audit and any significant deficiencies and material weaknesses in internal control over compliance that we identified during the audit.

Report on Internal Control over Compliance

Our consideration of internal control over compliance was for the limited purpose described in the Auditor's Responsibilities for the Audit of Compliance section above and was not designed to identify all deficiencies in internal control over compliance that might be material weaknesses or significant deficiencies in internal control over compliance. Given these limitations, during our audit we did not identify any deficiencies in internal control over compliance that we consider to be material weaknesses, as defined above. However, material weaknesses or significant deficiencies in internal control over compliance may exist that were not identified.

A *deficiency in internal control over compliance* exists when the design or operation of a control over compliance does not allow management or employees, in the normal course of performing their assigned functions, to prevent, or detect and correct, noncompliance with a type of compliance requirement of a federal program on a timely basis. A *material weakness in internal control over compliance* is a deficiency, or combination of deficiencies in internal control over compliance, such

16450 Monterey Rd., Suite 5, Morgan Hill, CA 95037
Tel: 408-217-8749 • E-Fax: 408-872-4159
info@cnallp.com • www.cnallp.com

that there is a reasonable possibility that material noncompliance with a type of compliance requirement of a federal program will not be prevented, or detected and corrected, on a timely basis. A *significant deficiency in internal control over compliance is a deficiency*, or a combination of deficiencies, in internal control over compliance with a type of compliance requirement of a federal program that is less severe than a material weakness in internal control over compliance, yet important enough to merit attention by those charged with governance.

Our consideration of internal control over compliance was for the limited purpose described in the Auditor's Responsibilities for the Audit of Compliance section above and was not designed to identify all deficiencies in internal control over compliance that might be material weaknesses or significant deficiencies in internal control over compliance. Given these limitations, during our audit we did not identify any deficiencies in internal control over compliance that we consider to be material weaknesses, as defined above. However, material weaknesses or significant deficiencies in internal control over compliance may exist that were not identified.

Our audit was not designed for the purpose of expressing an opinion on the effectiveness of internal control over compliance. Accordingly, no such opinion is expressed.

The purpose of this report on internal control over compliance is solely to describe the scope of our testing of internal control over compliance and the results of that testing based on the requirements of the Uniform Guidance. Accordingly, this report is not suitable for any other purpose.

C & A LLP

November 18, 2024
Morgan Hill, California

16450 Monterey Rd., Suite 5, Morgan Hill, CA 95037
Tel: 408-217-8749 • E-Fax: 408-872-4159
info@cnallp.com • www.cnallp.com

CITY OF ROCKLIN, CALIFORNIA
SCHEDULE OF EXPENDITURES OF FEDERAL AWARDS
FOR THE FISCAL YEAR ENDED JUNE 30, 2024

Federal Grantor/Pass-Through Grantor/Program Title	Assistance Listing	Pass-through Identifying Number	Expenditures to Subrecipients	Federal Expenditures
U.S. Department of Transportation				
Pass-through programs from the California Dept of Transportation:				
Highway Planning and Construction Cluster				
Pacific St. at Rocklin Rd Roundabout	20.205 (1)	CML-5095 (023)	$ -	$ 681,328
Pavement Rehabilitation	20.205 (1)	STPL-5095 (026)	-	1,043,991
Total Highway Planning and Construction Cluster			-	1,725,319
Pass-through programs from California Office of Traffic Safety:				
Highway safety cluster				
State and Community Highway Safety:				
Traffic Enforcement PT23159	20.600		-	6,348
Traffic Enforcement PT24163	20.600		-	21,874
Minimum Penalties for Repeat Offenders for Driving While Intoxicated:				
Traffic Enforcement PT23159	20.608		-	2,200
Traffic Enforcement PT24163	20.608		-	16,160
Total Highway safety cluster			-	46,582
Total US Department of Transportation			-	1,771,901
U.S. Department of Housing and Urban Development				
Direct program:				
CDBG HUD Entitlement 23-24	14.218	N/A	40,582	297,229
CDBG CARES - COVID 19	14.218	N/A	40,080	40,080
Total US Department of Housing and Urban Development			80,662	337,309
U.S. Department of Justice				
Direct program:				
Bulletproof Vest 2021	16.607	N/A	-	4,944
Bulletproof Vest 2022	16.607	N/A	-	6,612
Total US Department of Justice			-	11,556
Federal Emergency Management Agency				
Pass-through program from the State of California:				
California Severe Winter Storm Declaration 2023	97.030	DR 4683	-	3,856
Total Federal Emergency Management Agency			-	3,856
Total Federal Programs			$ 80,662	$ 2,124,622

(1) Audited as major program

The accompanying notes are an integral part of this financial statement.

Note 1. Basis of Presentation

The accompanying schedule of expenditures of federal awards (the schedule) includes the federal grant activity of the City of Rocklin (the City) under programs of the federal government for the year ended June 30, 2024. The information in this schedule is presented in accordance with the requirements of the Office of Management and Budget Title 2 U.S. *Code of Federal Regulations* (CFR) Part 200*, Uniform Administrative Requirements, Cost Principles, and Audit Requirements for Federal Awards*. Because the schedule presents only a selected portion of the operations of the City, it is not intended to and does not present the financial position, changes in net position, or cash flows of the City.

Note 2. Summary of Significant Accounting Policies

Expenditures reported on the schedule are reported on the modified accrual basis of accounting. Such expenditures are recognized following the cost principles contained in Title 2 U.S. *Code of Federal Regulations* (CFR) Part 200, *Uniform Administrative Requirements, Cost Principles, and Audit Requirements for Federal Awards*, wherein certain types of expenditures are not allowable or are limited as to reimbursement. Negative amounts shown on the schedule represent adjustments or credits made in the normal course of business to amounts reported as expenditures in prior years. Pass-through entity identifying numbers are presented where available. The City has elected not to use the 10 percent de-minimums indirect cost rate as allowed under Uniform Guidance.

Note 3. Relationship to the Basic Financial Statements

The amounts reported in the accompanying schedule agree, in all material respects, to amounts reported within the City's financial statements. Federal award revenues are reported principally in the City's financial statements as intergovernmental revenues.

Note 4. Relationship to Federal Financial Reports

Amounts reported in the accompanying schedule agree or can be reconciled with the amounts reported or to be reported in the federal financial reports.

Note 5. Pass-Through Entities' Identifying Number

When federal awards were received from a pass-through entity, the Schedule of Expenditures of Federal Awards shows, if available, the identifying number assigned by the pass-through entity. When no identifying number is shown, the City has determined that no identifying number is assigned for the program, or the City was unable to obtain an identifying number from the pass-through entity.

Section I - Summary of Auditor's Results

Financial Statements

Type of auditor's report issued	**Unmodified**
Internal control over financial reporting:	
Material weaknesses?	____ Yes **x** No
Significant deficiencies identified not considered to be material weaknesses?	____ Yes **x** None Reported
Non-compliance material to financial statements noted?	____ Yes **x** No

Federal Awards

Internal control over major programs:	
Material weaknesses?	____ Yes **x** No
Significant deficiencies identified not considered to be material weaknesses?	____ Yes **x** None Reported
Type of auditor's report issued on compliance over major programs	**Unmodified**
Any audit findings disclosed that are required to be reported in accordance with 2 CFR 200.516(a)	____ Yes **x** No
Identification of Major Programs:	

Assistance Listing	Name of Federal Program
20.205	Pacific St. at Rocklin Rd Roundabout
20.205	Pavement Rehabilitation

Dollar threshold used to distinguish between type A and type B programs:	$ 750,000
Auditee qualified as low risk auditee?	____ Yes **x** No

Section II - Financial Statement Findings

No findings noted.

Section III - Federal Award Findings and Questioned Costs

No findings noted.

Section II - Financial Statement Findings

No findings noted.

Section III - Federal Award Findings and Questioned Costs

No findings noted.

INDEPENDENT AUDITOR'S REPORT ON INTERNAL CONTROL OVER FINANCIAL REPORTING AND ON COMPLIANCE AND OTHER MATTERS BASED ON AN AUDIT OF FINANCIAL STATEMENTS PERFORMED IN ACCORDANCE WITH *GOVERNMENT AUDITING STANDARDS*

To the Honorable Mayor and Members of the
City Council of the City of Rocklin
Rocklin, California

We have audited, in accordance with the auditing standards generally accepted in the United States of America and the standards applicable to financial audits contained in *Government Auditing Standards* issued by the Comptroller General of the United States, the financial statements of the City of Rocklin (the "City") as of and for the year ended June 30, 2024, and the related notes to the financial statements, which collectively comprise the City's basic financial statements, and have issued our report thereon dated 2024.

Internal Control over Financial Reporting

Management is responsible for establishing and maintaining effective internal control over financial reporting. In planning and performing our audit of the financial statements, we considered the City's internal control over financial reporting (internal control) as a basis for designing audit procedures that are appropriate in the circumstances for the purpose of expressing our opinions on the financial statements, but not for the purpose of expressing an opinion on the effectiveness of the City's internal control. Accordingly, we do not express an opinion on the effectiveness of the City's internal control.

A *deficiency in internal control* exists when the design or operation of a control does not allow management or employees in the normal course of performing their assigned functions, to prevent, or detect and correct misstatements on a timely basis. A *material weakness* is a deficiency, or a combination of deficiencies, in internal control, such that there is a reasonable possibility that a material misstatement of the entity's financial statements will not be prevented, or detected and corrected on a timely basis. A *significant deficiency* is a deficiency, or a combination of deficiencies, in internal control that is less severe than a material weakness, yet important enough to merit attention by those charged with governance.

Our consideration of internal control over financial reporting was for the limited purpose described in the first paragraph of this section and was not designed to identify all deficiencies in internal control over financial reporting that might be material weaknesses or significant deficiencies. Given these limitations, during our audit we did not identify any deficiencies in internal control over financial reporting that we consider to be material weaknesses. However, material weaknesses and significant deficiencies may exist that were not identified.

Compliance and Other Matters

As part of obtaining reasonable assurance about whether the City's financial statements are free of material misstatement, we performed tests of its compliance with certain provisions of laws, regulations, contracts, and grant agreements, noncompliance with which could have a direct and material effect on the financial statements. However, providing an opinion on compliance with those

16450 Monterey Rd., Suite 5, Morgan Hill, CA 95037
Tel: 408-217-8749 • E-Fax: 408-872-4159
info@cnallp.com • www.cnallp.com

provisions was not an objective of our audit, and accordingly, we do not express such an opinion. The results of our tests disclosed no instances of noncompliance or other matters that are required to be reported under *Government Auditing Standards*.

Purpose of this Report

The purpose of this report is solely to describe the scope of our testing of internal control and compliance and the results of that testing, and not to provide an opinion on the effectiveness of the entity's internal control or on compliance. This report is an integral part of an audit performed in accordance with *Government Auditing Standards* in considering the entity's internal control and compliance. Accordingly, this communication is not suitable for any other purpose.

C & A LLP

Morgan Hill, California
November 18, 2024

16450 Monterey Rd., Suite 5, Morgan Hill, CA 95037
Tel: 408-217-8749 • E-Fax: 408-872-4159
info@cnallp.com • www.cnallp.com

City Council Staff Report

Subject: Quarterly Treasurer's Report

Date: February 25, 2025

Submitted By: Megan Bressem, Management Analyst
Daniel Choe, Administrative Services Deputy Director

Department: Administrative Services - Finance

Recommendation:
Receive the Treasurer's Report for the Quarter Ending December 31, 2024.

Background:
The Quarterly Treasurer's Report (Attachment 1), for the quarter ending December 31, 2024, provides the depository, maturity date, amount, and estimated annualized interest earnings for the City's investments pursuant to the Investment Policy (Resolution No. 2024-150). Included as Attachments 2 and 3 are the City's Investment Portfolio and Placer County Treasurer's Pooled Investment Reports for the period ending December 31, 2024, detailing the investment values and individual securities.

ATTACHMENTS:
1. Treasurer's Report for Quarter Ending December 31, 2024
2. City of Rocklin Investment Portfolio Quarterly Report
3. Placer County Treasurer's Pooled Investment Report

Docusign Envelope ID: DAA94789-BE95-4A6F-B495-680FDF846662

CITY OF ROCKLIN
TREASURER'S REPORT OF INVESTMENTS & CASH
December 31, 2024

DEPOSITORY	PURCHASE DATE	MATURITY DATE	RATE %	AMOUNT	TOTAL AMOUNT	ANNUALIZED INT. RETURN	SPECIAL NOTES
				INVESTMENTS			
LOCAL AGENCY INVESTMENT FUND			4.434	$ 23,337,252	$ 23,337,252	$ 1,034,774	Type: State Pooled Investment Account Considered 1 day funds
CITIGROUP INC.	12/11/1998	02/15/2098	6.875	$ 20,000	$ 20,000	$ 1,375	Type: Corporate Bond Coupon Rate: 6.875 Cost is reported Market Value: $22,394.07* Par Value: $20,000
PLACER COUNTY TREASURER'S INVESTMENT PORTFOLIO			3.731	$ 9,193,869	$ 9,193,869	$ 343,023	Type: County Pooled Investment Account Considered 1 day funds
FIVE STAR BANK (ROCKLIN RISE) DEPOSIT			4.497	$ 5,538,481	$ 5,538,481	$ 249,065	Type: Public Money Market Account Considered 1 day funds
CITY OF ROCKLIN INVESTMENT PORTFOLIO			3.160	$ 74,909,693	$ 74,909,693	$ 2,367,146	Type: City Pooled Investment Account Considered 1 day funds
TOTAL INVESTMENTS					**$ 112,999,295**	**$ 3,995,383**	
AVERAGE PERCENTAGE ON INVESTMENTS			3.536%		WEIGHTED AVERAGE MATURITY		1.48 years
				OPERATING ACCOUNTS			
WELLS FARGO OPERATING ACCOUNT			N/A	$ 6,939,984	$ 6,939,984	$ -	Type: Checking Account Immediate Access Compensatory balance arrangement
CDBG ACCOUNT			0.740	$ 158,180	$ 158,180	$ 1,171	Type: Checking Account Immediate Access
TOTAL OPERATING ACCOUNTS					**$ 7,098,164**	**$ 1,171**	

* Sources of pricing as reported by Wells Fargo Investments.

I hereby certify that the above amounts and locations of accounts represent the total investments of the City of Rocklin as of the date of this report and that the investments are in conformity with Legislative Policy No. 1 as restated in Resolution 2024-150 on June 25, 2024. I hereby certify that the City of Rocklin has sufficient funds available to meet its expenditure requirements for the next six months.

DocuSigned by: DANIEL CHOE — 2/10/2025 | 10:28 AM PST
DANIEL CHOE
CITY TREASURER
DATE

DocuSigned by: Aly Zimmermann — 2/10/2025 | 6:13 PM PST
ALY ZIMMERMANN
CITY MANAGER
DATE

Docusign Envelope ID: DAA94789-BE95-4A6F-B495-680FDF846662

CITY OF ROCKLIN INVESTMENT REPORT
for the Quarter Ended December 31, 2024

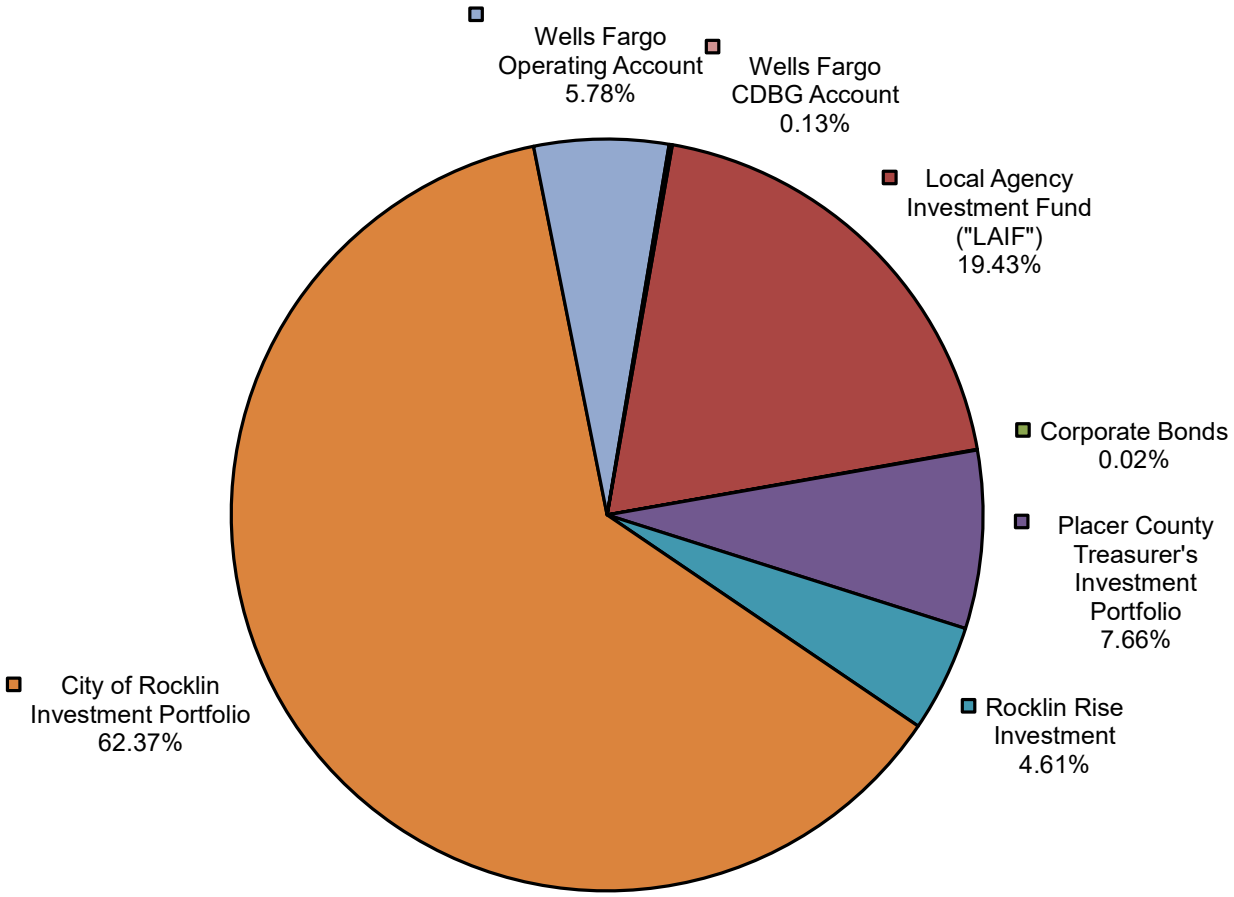

CHANDLER ASSET MANAGEMENT

INVESTMENT REPORT

City of Rocklin | As of December 31, 2024

CHANDLER ASSET MANAGEMENT | chandlerasset.com

Chandler Team:

For questions about your account, please call (800) 317-4747,
or contact clientservice@chandlerasset.com

Information contained herein is confidential. We urge you to compare this statement to the one you receive from your qualified custodian. Please see Important Disclosures at the end of the statement.

TABLE OF CONTENTS

ECONOMIC UPDATE

ACCOUNT PROFILE

CONSOLIDATED INFORMATION

PORTFOLIO HOLDINGS

TRANSACTIONS

CHANDLER ASSET MANAGEMENT

ECONOMIC UPDATE

- Recent economic data suggests continued growth fueled by a resilient consumer. Inflationary trends have subsided, but some components remain sticky, and core levels remain above the Fed's target. The labor market reflects improved balance between supply and demand for workers. While job creation has been robust, continuing jobless claims remain elevated. Given the economic outlook, we expect gradual normalization of monetary policy and a steepening yield curve.

- As broadly anticipated, the Federal Open Market Committee (FOMC) reduced the Fed Funds Rate by 25 basis points to the range of 4.25-4.50% at the December meeting. Although the cut was widely anticipated, market participants viewed the trajectory of rates in the Summary of Economic Projections (SEP) as 'hawkish.' Chair Jerome Powell reiterated previous statements indicating the economy is in a good place and that monetary policy is well positioned. The Fed released the quarterly SEP, which now forecasts a higher central tendency of core inflation and a higher longer run Fed Funds forecast. In the Chandler team's view, the updated SEP reflects the continued resiliency of the US economy and the corresponding risk of inflation taking longer to reach the FOMC's two percent objective in 2025.

- US Treasury yields shifted higher in December and the curve steepened. The 2-year Treasury yield increased 9 basis points to 4.24%, the 5-year Treasury rose 33 basis points to 4.38%, and the 10-year Treasury yield surged 40 basis points to 4.57%. The spread between the 2-year and 10-year Treasury yield points on the curve increased to +33 basis points at December month-end versus +2 basis points at November month-end. The spread between the 2-year Treasury and 10-year Treasury yield one year ago was -37 basis points. The spread between the 3-month and 10-year Treasury yield points on the curve increased to +25 basis points in December from -32 basis points in November.

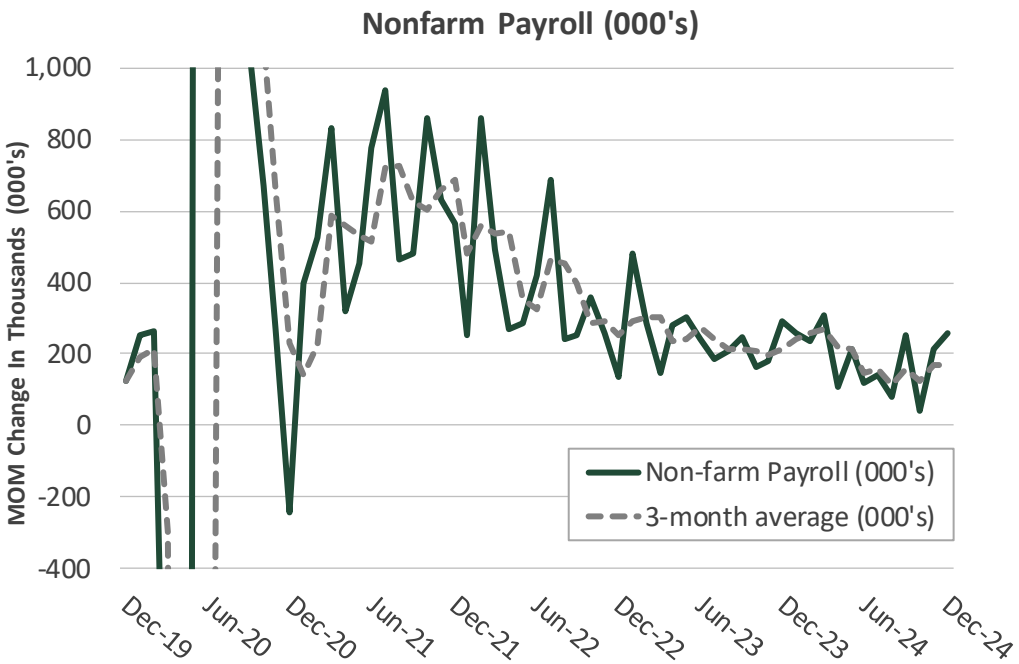

Source: US Department of Labor

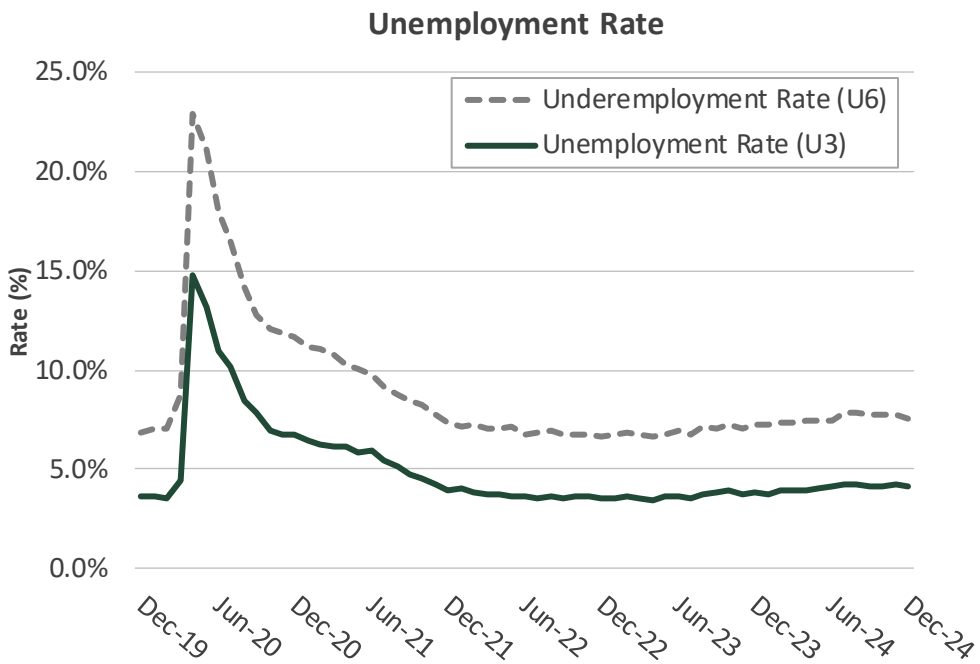

Source: US Department of Labor

The U.S. economy added 256,000 jobs in December, far exceeding consensus expectations. Gains were led by health care, retail, and leisure sectors, while manufacturing shed jobs. The three-month moving average and six-month moving average payrolls totaled 170,000 and 165,000 respectively. The unemployment rate declined to 4.1% in December, and the labor participation rate was unchanged at 62.5%, remaining below the pre-pandemic level of 63.3%. The U-6 underemployment rate, which includes those who are marginally attached to the labor force and employed part time for economic reasons fell to 7.5%. Average hourly earnings moderated to an increase of 3.9% year-over-year in December.

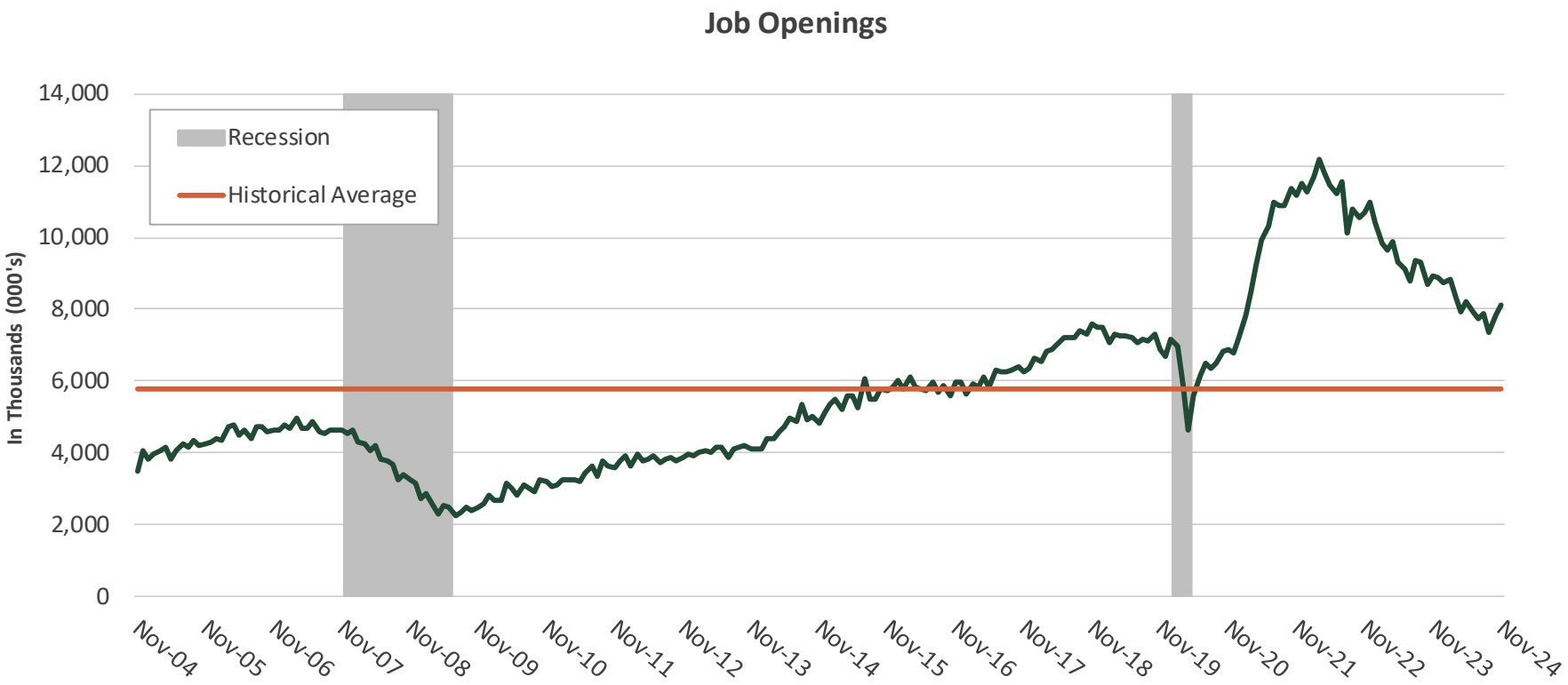

Source: US Department of Labor

The Labor Department's Job Openings and Labor Turnover Survey (JOLTS) rose to 8.098 million new job openings in November, which represented an increase from the upwardly revised 7.839 million job openings in October. Job openings indicate a ratio of 1.1 jobs for each unemployed individual, representing a relatively balanced labor market.

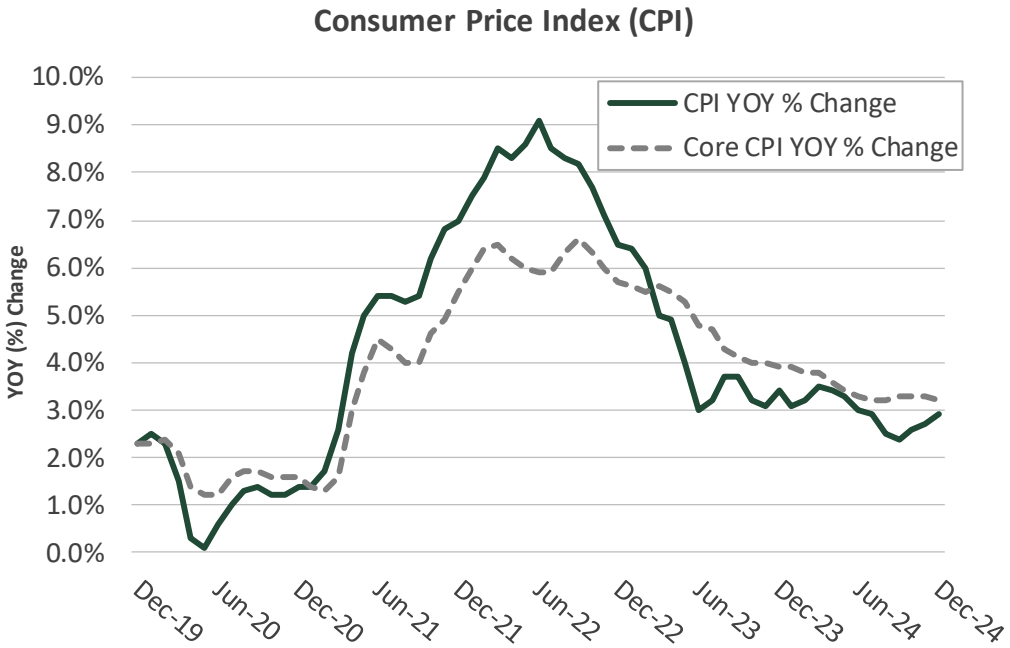

Source: US Department of Labor

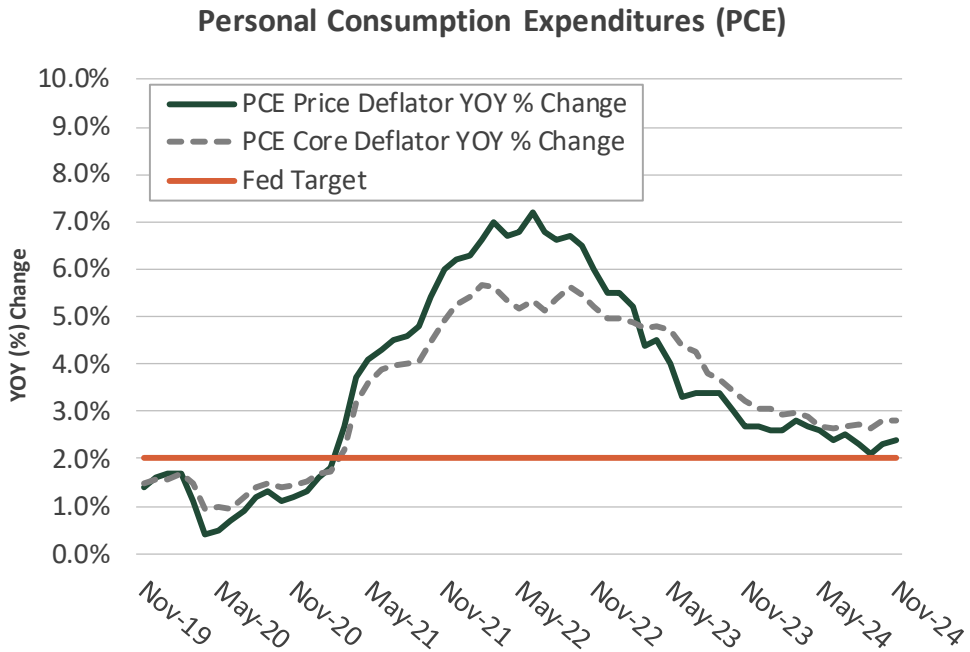

Source: US Department of Commerce

In December, the Consumer Price Index (CPI) rose 0.4% month-over-month and 2.9% year-over-year. The Core CPI, which excludes volatile food and energy components, rose 0.2% month-over-month and 3.2% year-over-year, slowing from last month and coming in lower than consensus expectations. The Personal Consumption Expenditures (PCE) Index rose 0.1% from the previous month and 2.4% year-over-year in November versus a 2.3% increase in October. The Core PCE deflator (the Fed's preferred gauge) increased 0.1% month-over-month, below recent small month-over-month rises and 2.8% over the past year. Core prices are exhibiting what Fed Chair Powell describes as "sideways" movement. Although inflation has moderated, price increases remain above the Fed's 2% target.

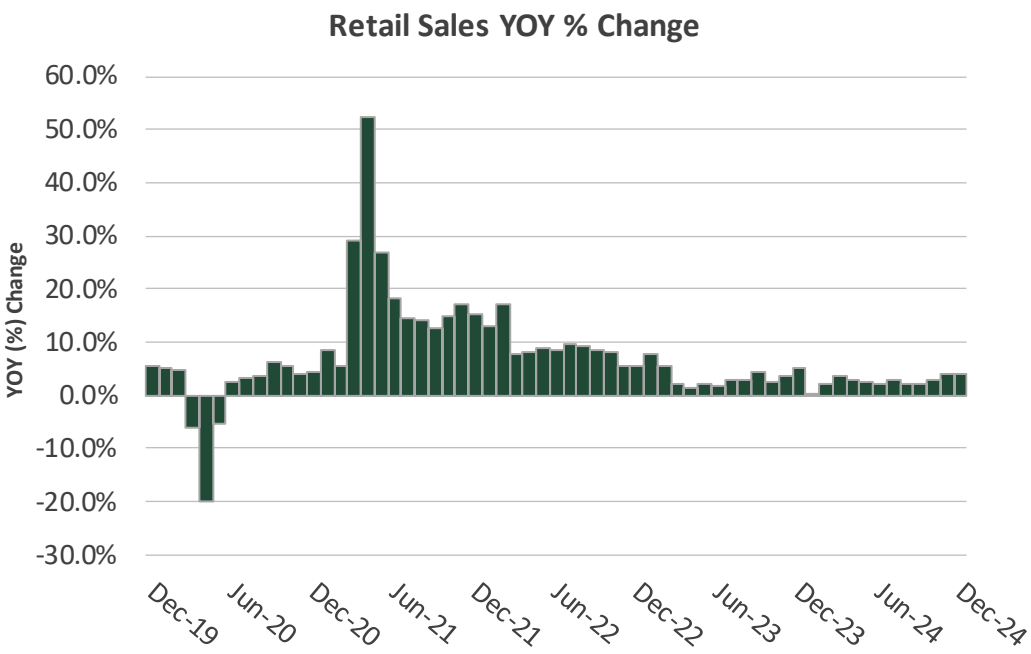

Source: US Department of Commerce

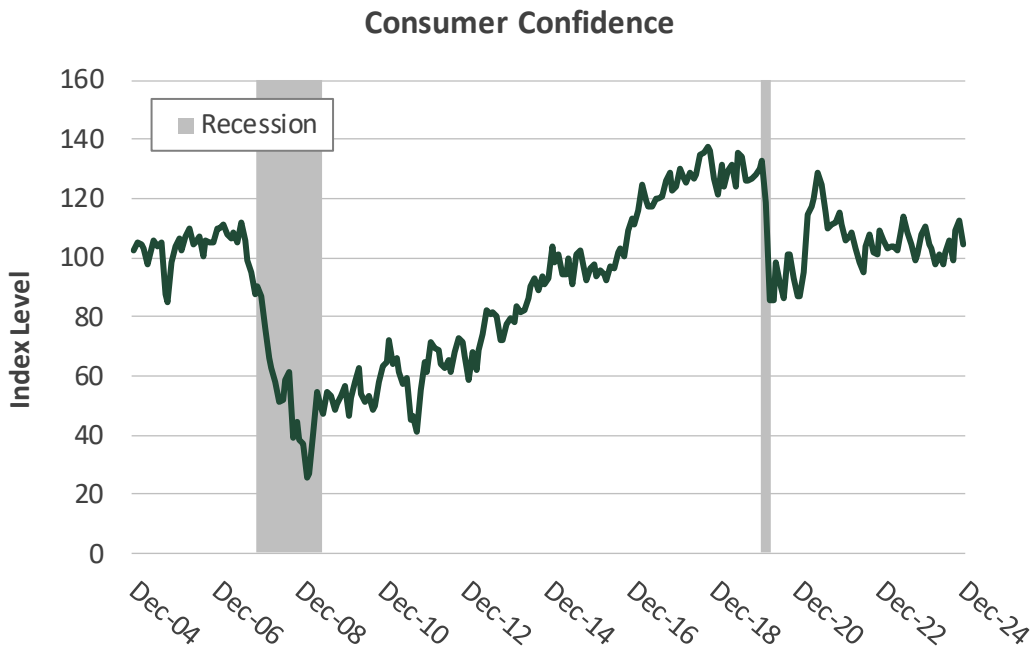

Source: The Conference Board
All time high is 144.70 (1/31/00); All time low is 25.30 (2/28/09)

December Retail Sales advanced broadly, providing evidence of a solid pace of consumer spending in the holiday season. Retail Sales rose 0.4% in December, after an increase of 0.8% in November and below the consensus expectation of 0.6%. Spending was solid for motor vehicles and non-store retailers, as well as for most other categories associated with the winter holidays. On a year-over-year basis, Retail Sales grew 3.9% in December versus 4.1% in November. The Retail Sales Control Group, which are used to calculate gross domestic product, increased 0.7% in December, the most in three months, exceeding expectations of 0.4%. The Conference Board's Consumer Confidence Index declined to 104.7 in December from an upwardly revised 112.8 in November. Consumers' assessment about future business conditions and outcomes were substantially less optimistic and there was increased pessimism about future employment prospects. While the consumer has been resilient, low savings rates, growing credit card debt, higher delinquencies, and a moderating labor market pose potential risks to future spending.

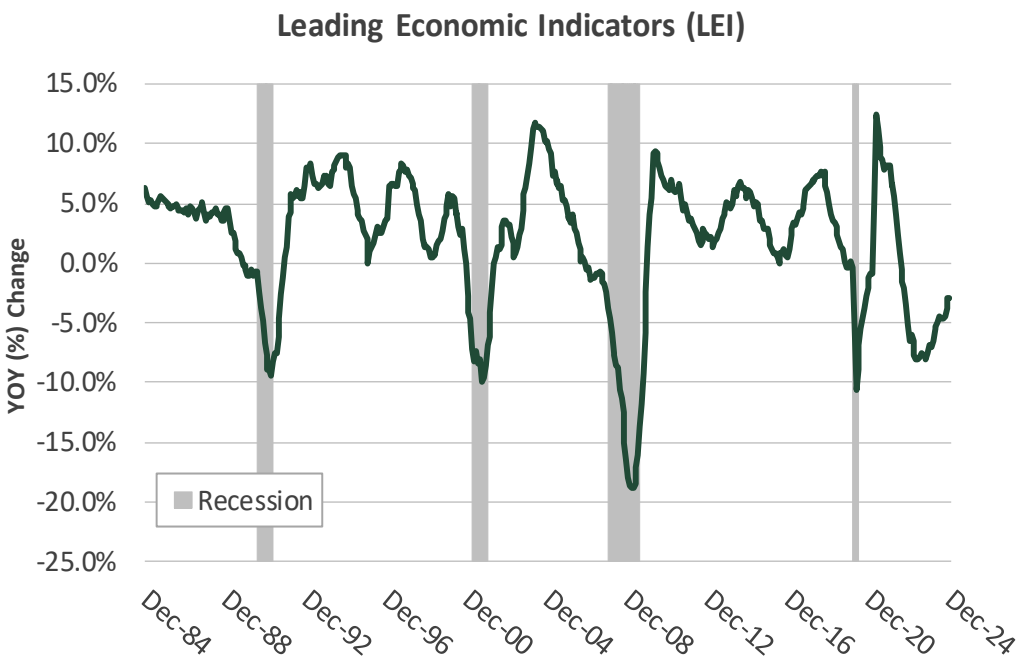

Source: The Conference Board

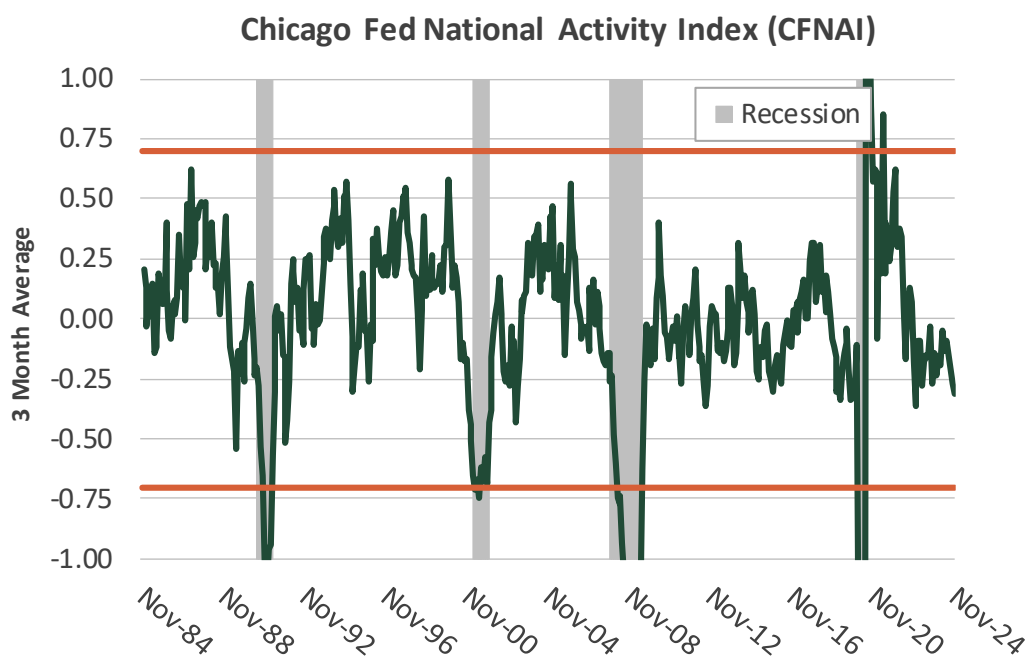

Source: Federal Reserve Bank of Chicago

The Conference Board's Leading Economic Index (LEI) increased 0.3% in November reversing its -0.4% decline in October due to a rebound in building permits, continued support from equities, improvement in average hours worked in manufacturing, and fewer initial unemployment claims. The LEI decreased year-over-year by -3.5%. According to the Conference Board, the rise in LEI is a positive sign for future activity in the US and is consistent with an expectation for moderate growth at the end of 2024 and into early 2025. The Chicago Fed National Activity Index (CFNAI) improved to -0.12 in November from -0.50 in October. The three-month moving average fell to -0.31 in November from -0.27 in October, indicating below-trend growth expectations for the economy.

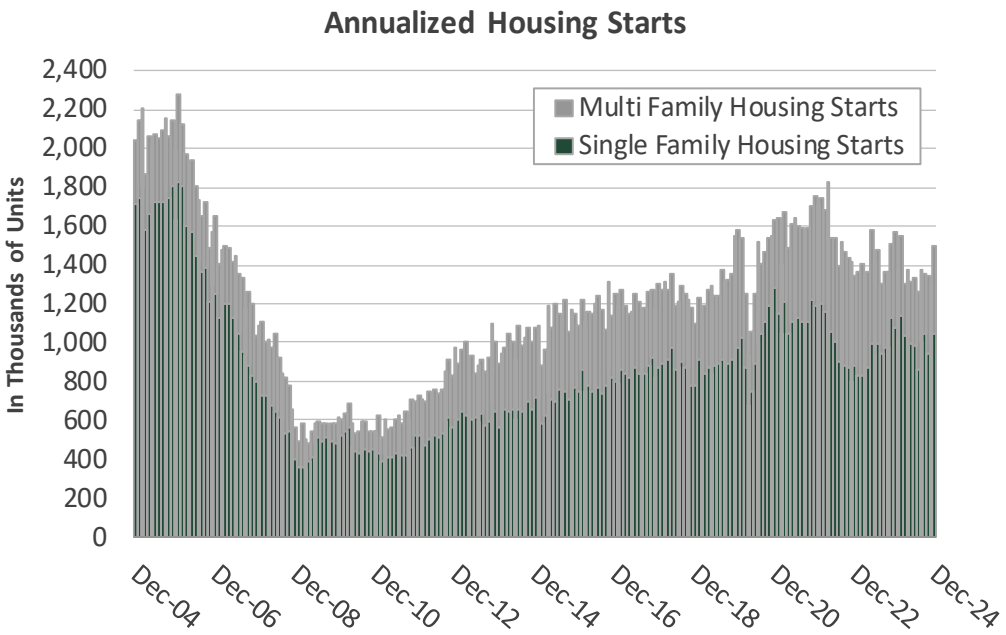

Source: US Department of Commerce

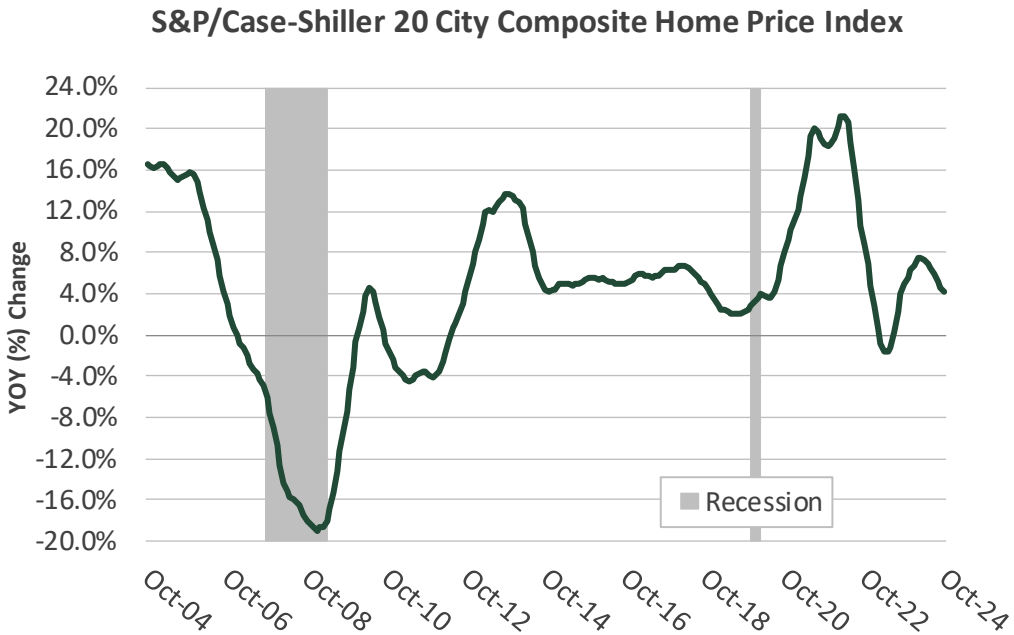

Source: S&P

Housing starts surged by 15.8% in December to 1.5 million units after declining in the prior three months. Total starts are down 4.4% compared to December 2023. The supply of existing homes is gradually becoming more abundant after the period of scarcity as homeowners held onto their low mortgage rates. The Freddie Mac 30-year fixed rate mortgage averaged approximately 6.7% in December. According to the Case-Shiller 20-City Home Price Index, housing prices rose 4.2% year-over-year in October, decelerating from 4.6% reported in the previous month. With more inventory entering the market the trend is gradually improving; however higher mortgage rates continue to impact affordability.

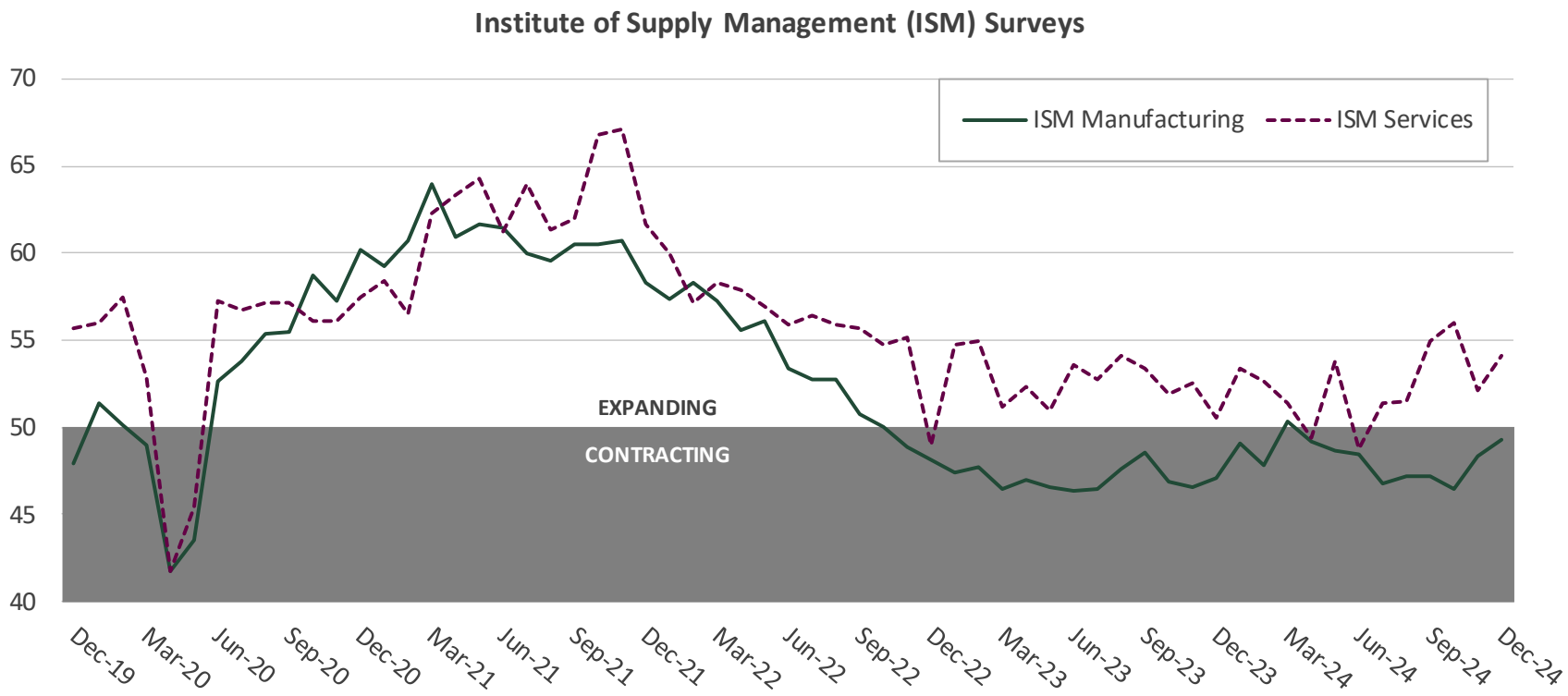

Source: Institute for Supply Management

The Institute for Supply Management (ISM) Manufacturing index rose more than forecast to 49.3 in December from 48.4 in November. While the index has posted contractionary readings for the past nine months, New Orders and Prices indices continued in expansion territory and the Production Index returned to expansion this month. The Backlog of Orders Index and Employment Index remained in contraction. The ISM Services Index rose to 54.1 in December from 52.1 in November while marking the sixth straight month of expansion. Robust business activity ahead of the new year and mitigating risks of potential tariffs were the key drivers. A reading over 50 indicates expansion, while a reading under 50 indicates contraction.

GROSS DOMESTIC PRODUCT (GDP)

CHANDLER ASSET MANAGEMENT

Components of GDP	12/23	3/24	6/24	9/24
Personal Consumption Expenditures	2.3%	1.3%	1.9%	2.5%
Gross Private Domestic Investment	0.2%	0.6%	1.5%	0.2%
Net Exports and Imports	0.1%	-0.6%	-0.9%	-0.4%
Federal Government Expenditures	0.0%	0.0%	0.3%	0.6%
State and Local (Consumption and Gross Investment)	0.6%	0.3%	0.3%	0.3%
Total	**3.2%**	**1.6%**	**3.0%**	**3.1%**

Source: US Department of Commerce

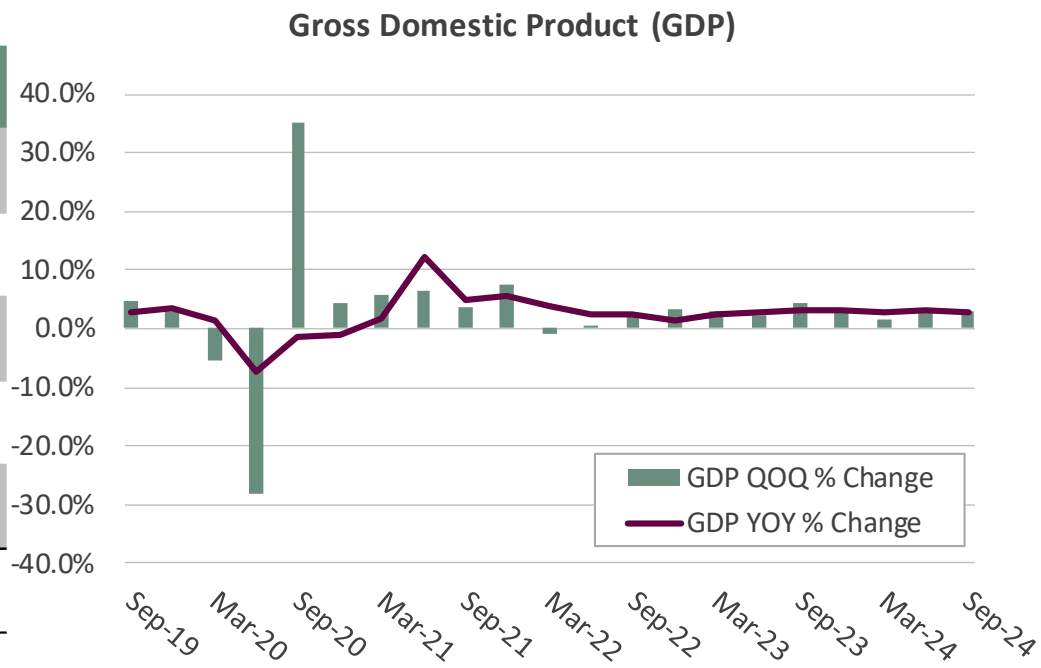

Source: US Department of Commerce

According to the third estimate, third quarter GDP increased at an annualized rate of 3.1% compared to 2.8% from the second estimate. Growth continues to be powered by personal consumption expenditures. Government consumption expenditures and nonresidential fixed investment also had positive contributions, with negative offsets by net exports, residential investment, and change in private inventories. The consensus projection calls for 2.4% growth in the fourth quarter and 2.7% growth for the full year 2024.

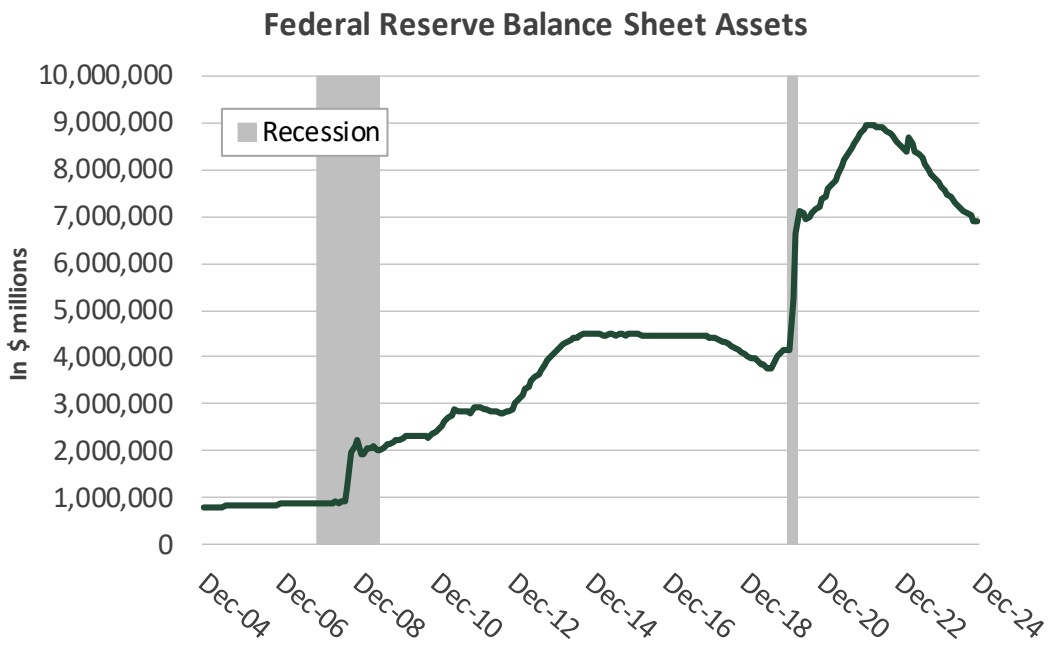

Source: Federal Reserve

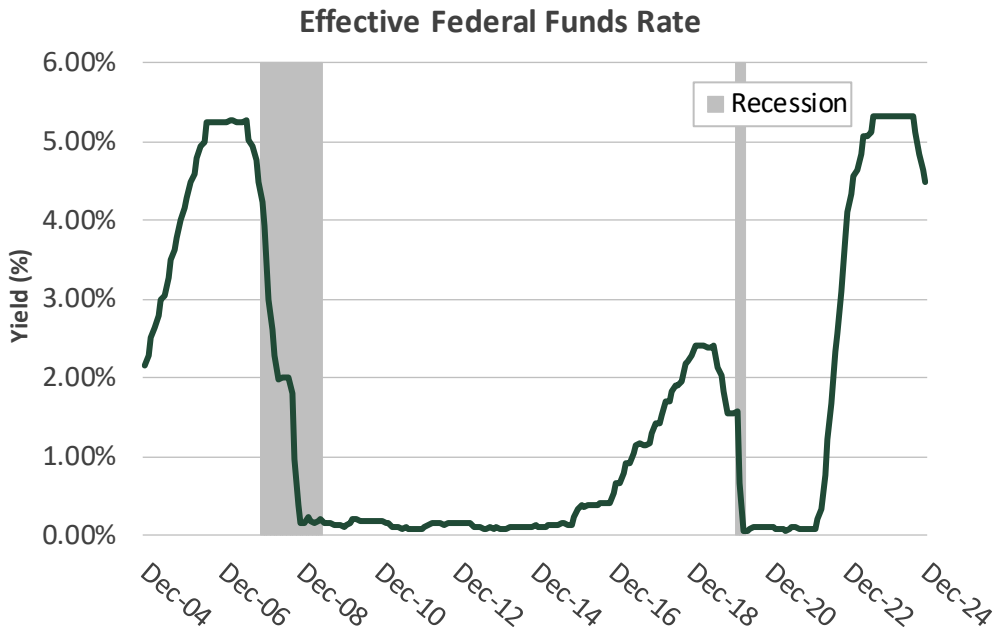

Source: Bloomberg

As broadly anticipated, the Federal Open Market Committee (FOMC) reduced the Fed Funds Rate by 25 basis points to the range of 4.25-4.50% at the December meeting. There was one dissenting vote by Cleveland Fed President Beth Hammack who would have preferred no change in rates. Although a reduction in rates was widely anticipated, market participants viewed the trajectory of rates in the SEP as 'hawkish.' Chair Jerome Powell reiterated previous statements that monetary policy is "well positioned" and the outlook remains roughly balanced between the dual mandate of maximum employment and price stability. Economic activity is expanding at a solid pace, labor market conditions have "generally eased", and the unemployment rate "remains low." The Fed released the quarterly Summary of Economic Projections (SEP) which now forecasts a higher, longer run median Fed Funds rate expectation among Fed Governors at 2.8 – 3.6%. The Fed continues to reduce its holdings of U.S. Treasury securities and agency mortgage-backed securities as per its predefined schedule of $25 billion and $35 billion per month. Since the Fed began its Quantitative Tightening campaign in June 2022, securities holdings have declined by approximately $1.9T to approximately $7.0T.

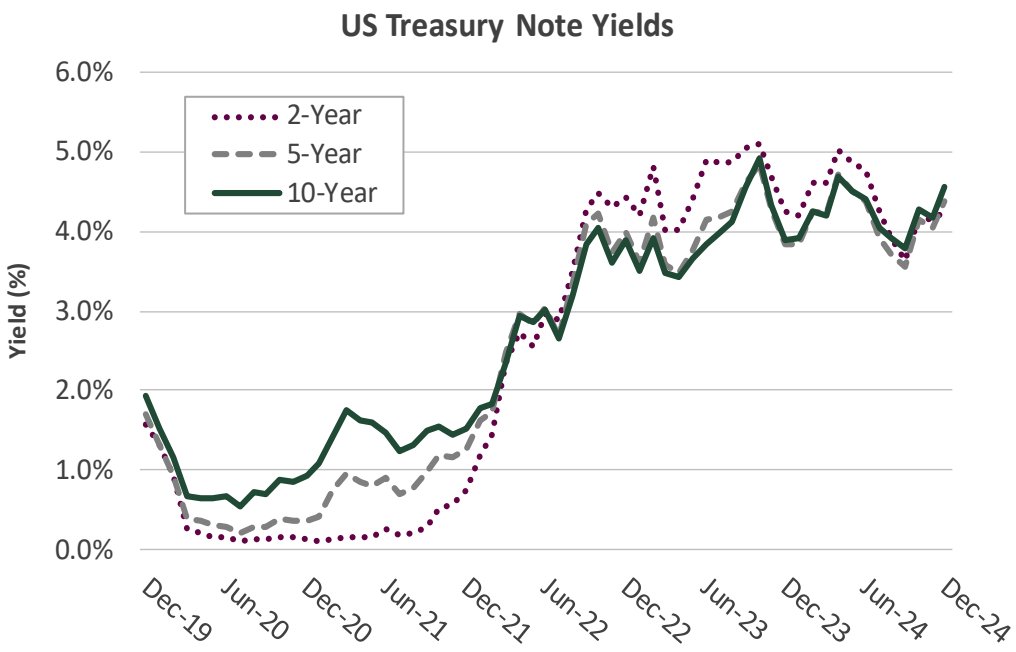

Source: Bloomberg

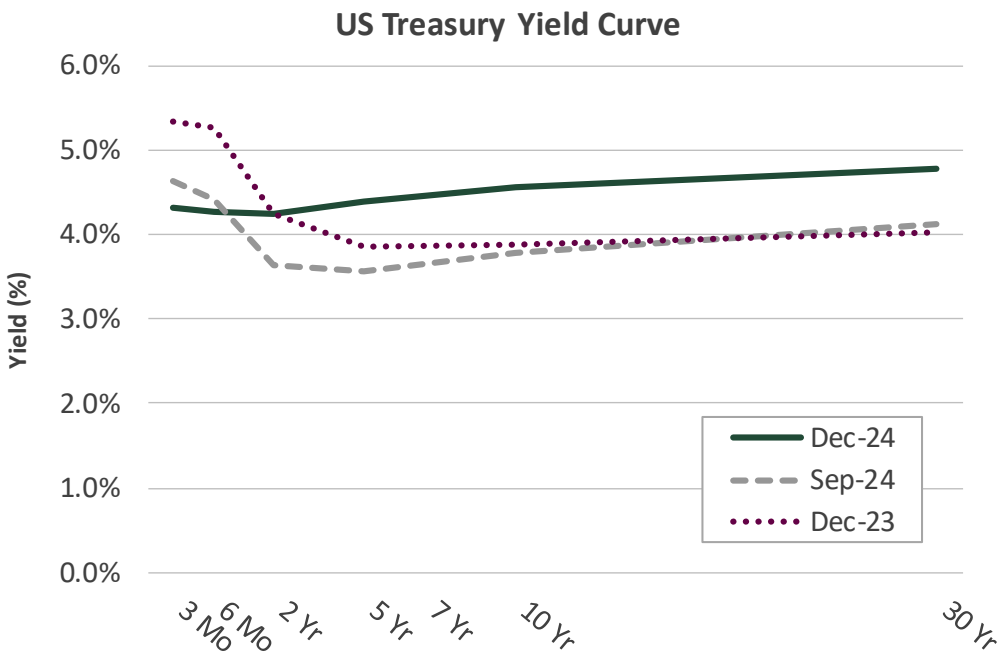

Source: Bloomberg

At the end of December, the 2-year Treasury yield was 1 basis point lower, and the 10-Year Treasury yield was 69 basis points higher, year-over-year. The spread between the 2-year and 10-year Treasury yield points on the curve increased to +33 basis points at December month-end versus +2 basis points at November month-end. The yield curve inversion which began in July 2022 was historically long. The average historical spread (since 2004) is about +99 basis points. The 3-month and 10-year Treasury yield curve normalized to +25 basis points in December from -32 basis points in November.

CHANDLER ASSET MANAGEMENT

ACCOUNT PROFILE

CHANDLER ASSET MANAGEMENT

Investment Objectives

Safety of principal is the foremost objective of the investment program. The investment portfolio shall remain sufficiently liquid to meet all requirements that may be reasonably anticipated. The investment portfolio shall be designed with the objective of attaining a market rate of return throughout budgetary and economic cycles, taking into account the investment risk constraints and liquidity needs.

Chandler Asset Management Performance Objective

The performance objective for the portfolio is to earn a total rate of return through a market cycle that is equal to or above the return on the benchmark index.

Strategy

In order to achieve this objective, the portfolio invests in high-quality fixed income securities that comply with the investment policy and all regulations governing the funds.

STATEMENT OF COMPLIANCE

CHANDLER ASSET MANAGEMENT

City of Rocklin | Account #11014 | As of December 31, 2024

Rules Name	Limit	Actual	Compliance Status	Notes
AGENCY MORTGAGE SECURITIES (CMOS)				
Max % (MV)	20.0	3.9	Compliant	
Max % Issuer (MV)	30.0	3.9	Compliant	
Max Maturity (Years)	5.0	2.5	Compliant	
Min Rating (AA by 1)	0.0	0.0	Compliant	
ASSET-BACKED SECURITIES (ABS)				
Max % (MV)	20.0	0.0	Compliant	
Max % Issuer (MV)	5.0	0.0	Compliant	
Min Rating (AA- by 1)	0.0	0.0	Compliant	
BANKERS' ACCEPTANCES				
Max % (MV)	40.0	0.0	Compliant	
Max % Issuer (MV)	5.0	0.0	Compliant	
Max Maturity (Days)	180	0.0	Compliant	
Min Rating (A-1 by 1 & A- by 1)	0.0	0.0	Compliant	
COLLATERALIZED BANK DEPOSITS				
Max % (MV)	100.0	0.0	Compliant	
Max % Issuer (MV)	5.0	0.0	Compliant	
COLLATERALIZED TIME DEPOSITS (NON-NEGOTIABLE CD/TD)				
Max % (MV)	20.0	0.0	Compliant	
Max % Issuer (MV)	5.0	0.0	Compliant	
COMMERCIAL PAPER				
Max % (MV)	25.0	0.0	Compliant	
Max % Issuer (MV)	5.0	0.0	Compliant	
Max Maturity (Days)	270	0.0	Compliant	
Min Rating (A-1 by 1 or A- by 1)	0.0	0.0	Compliant	
CORPORATE MEDIUM TERM NOTES				
Max % (MV)	30.0	25.1	Compliant	
Max % Issuer (MV)	5.0	1.8	Compliant	
Max Maturity (Years)	5	4	Compliant	

City of Rocklin | Account #11014 | As of December 31, 2024

Rules Name	Limit	Actual	Compliance Status	Notes
Min Rating (A- by 1)	0.0	0.0	Compliant	
FDIC INSURED TIME DEPOSITS (NON-NEGOTIABLE CD/TD)				
Max % (MV)	20.0	0.0	Compliant	
Max % Issuer (MV)	5.0	0.0	Compliant	
FEDERAL AGENCIES				
Max % (MV)	100.0	5.1	Compliant	
Max % Issuer (MV)	30.0	3.5	Compliant	
Max Callables (MV)	20.0	0.0	Compliant	
Max Maturity (Years)	5	4	Compliant	
LOCAL AGENCY INVESTMENT FUND (LAIF)				
Max Concentration (MV)	75.0	0.0	Compliant	
LOCAL GOVERNMENT INVESTMENT POOL (LGIP)				
Max % (MV)	25.0	0.0	Compliant	
MONEY MARKET MUTUAL FUNDS				
Max % (MV)	20.0	6.8	Compliant	
Max % Issuer (MV)	20.0	6.8	Compliant	
Min Rating (AAA by 2)	0.0	0.0	Compliant	
MORTGAGE-BACKED SECURITIES, CMOS (NON-AGENCY)				
Max % (MV)	20.0	0.0	Compliant	
Max % Issuer (MV)	5.0	0.0	Compliant	
Max Maturity (Years)	5.0	0.0	Compliant	
Min Rating (AA- by 1)	0.0	0.0	Compliant	
MUNICIPAL SECURITIES (CA, LOCAL AGENCY)				
Max % (MV)	30.0	1.0	Compliant	
Max % Issuer (MV)	5.0	1.0	Compliant	
Max Maturity (Years)	5	4	Compliant	
Min Rating (A- by 1)	0.0	0.0	Compliant	
MUNICIPAL SECURITIES (CA, OTHER STATES)				

STATEMENT OF COMPLIANCE

City of Rocklin | Account #11014 | As of December 31, 2024

Rules Name	Limit	Actual	Compliance Status	Notes
Max % (MV)	30.0	0.0	Compliant	
Max % Issuer (MV)	5.0	0.0	Compliant	
Max Maturity (Years)	5	0.0	Compliant	
Min Rating (A- by 1)	0.0	0.0	Compliant	
MUTUAL FUNDS				
Max % (MV)	20.0	0.0	Compliant	
Max % Issuer (MV)	10.0	0.0	Compliant	
Min Rating (AAA by 2)	0.0	0.0	Compliant	
NEGOTIABLE CERTIFICATES OF DEPOSIT (NCD)				
Max % (MV)	30.0	0.0	Compliant	
Max % Issuer (MV)	5.0	0.0	Compliant	
Max Maturity (Years)	5	0.0	Compliant	
Min Rating (A-1 by 1 or A- by 1 if > FDIC Limit)	0.0	0.0	Compliant	
REPURCHASE AGREEMENTS				
Max % (MV)	100.0	0.0	Compliant	
Max % Issuer (MV)	5.0	0.0	Compliant	
Max Maturity (Years)	1.0	0.0	Compliant	
SUPRANATIONAL OBLIGATIONS				
Max % (MV)	30.0	4.7	Compliant	
Max % Issuer (MV)	10.0	2.8	Compliant	
Max Maturity (Years)	5	4	Compliant	
Min Rating (AA- by 1)	0.0	0.0	Compliant	
U.S. TREASURIES				
Max % (MV)	100.0	53.4	Compliant	
Max Maturity (Years)	5	5	Compliant	

PORTFOLIO CHARACTERISTICS

City of Rocklin | Account #11014 | As of December 31, 2024

	Benchmark*	12/31/2024 Portfolio	9/30/2024 Portfolio
Average Maturity (yrs)	2.66	2.78	2.90
Average Modified Duration	2.48	2.50	2.62
Average Purchase Yield		4.22%	4.25%
Average Market Yield	4.29%	4.42%	3.86%
Average Quality**	AA+	AA+	AA+
Total Market Value		62,442,727	57,713,619

*Benchmark: ICE BofA 1-5 Year Unsubordinated US Treasury & Agency Index
**The credit quality is a weighted average calculation of the highest of S&P, Moody's and Fitch.

SECTOR DISTRIBUTION

City of Rocklin | Account #11014 | As of December 31, 2024

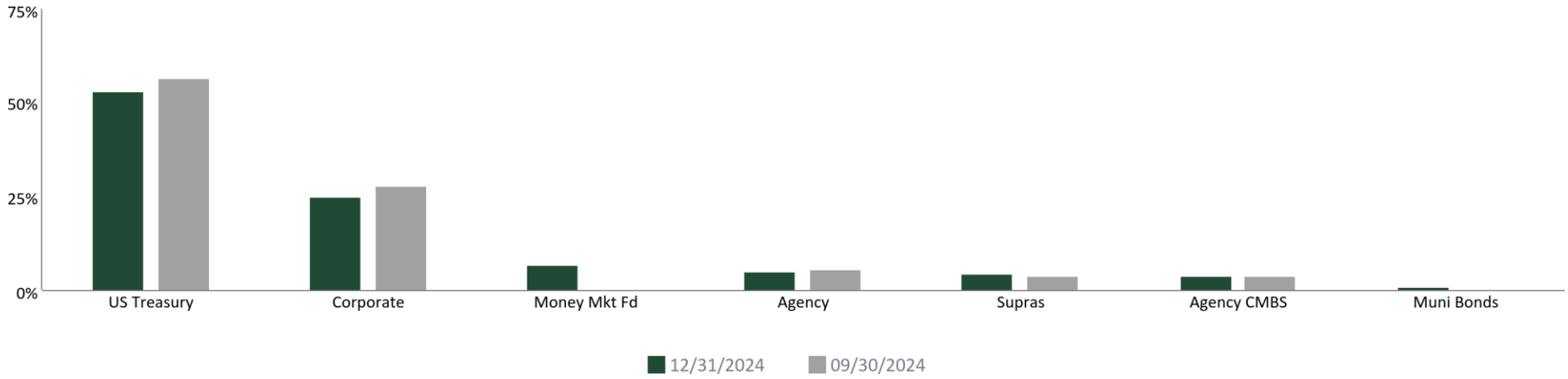

Sector as a Percentage of Market Value

Sector	12/31/2024	09/30/2024
US Treasury	53.43%	57.03%
Corporate	25.12%	28.04%
Money Mkt Fd	6.81%	0.68%
Agency	5.05%	5.62%
Supras	4.71%	4.33%
Agency CMBS	3.93%	4.30%
Muni Bonds	0.95%	--

ISSUERS

CHANDLER ASSET MANAGEMENT

City of Rocklin | Account #11014 | As of December 31, 2024

Issuer	Investment Type	% Portfolio
Government of The United States	US Treasury	53.43%
First American Govt Oblig fund	Money Mkt Fd	6.81%
FHLMC	Agency CMBS	3.93%
Farm Credit System	Agency	3.45%
Inter-American Development Bank	Supras	2.76%
International Bank for Recon and Dev	Supras	1.95%
Toyota Motor Corporation	Corporate	1.79%
Deere & Company	Corporate	1.76%
Federal Home Loan Banks	Agency	1.60%
The Toronto-Dominion Bank	Corporate	1.22%
Caterpillar Inc.	Corporate	1.21%
Royal Bank of Canada	Corporate	1.20%
Walmart Inc.	Corporate	1.19%
Chubb Limited	Corporate	1.16%
UnitedHealth Group Incorporated	Corporate	1.16%
NextEra Energy, Inc.	Corporate	1.14%
PepsiCo, Inc.	Corporate	1.14%
The Home Depot, Inc.	Corporate	1.14%
State Street Corporation	Corporate	1.05%
Honeywell International Inc.	Corporate	1.01%
Public Service Enterprise Group Inco	Corporate	1.01%
State of California	Muni Bonds	0.95%
PACCAR Inc	Corporate	0.95%
Bank of America Corporation	Corporate	0.95%
Morgan Stanley	Corporate	0.92%
JPMorgan Chase & Co.	Corporate	0.89%
Realty Income Corporation	Corporate	0.81%
Duke Energy Corporation	Corporate	0.79%
Apple Inc.	Corporate	0.78%
Prologis, Inc.	Corporate	0.76%

ISSUERS

City of Rocklin | Account #11014 | As of December 31, 2024

Issuer	Investment Type	% Portfolio
Eli Lilly and Company	Corporate	0.67%
National Rural Utilities Cooperative	Corporate	0.40%
Cash	Cash	0.00%
TOTAL		**100.00%**

QUALITY DISTRIBUTION

City of Rocklin | Account #11014 | As of December 31, 2024

S&P Rating

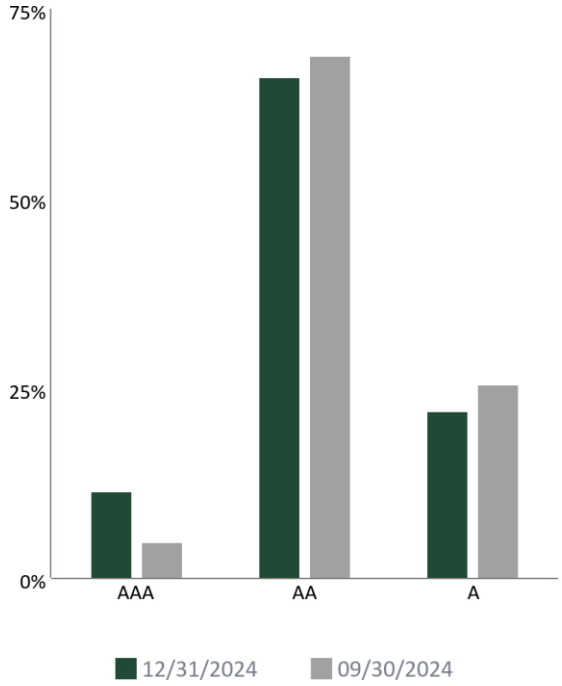

Rating	12/31/2024	09/30/2024
AAA	11.5%	5.0%
AA	66.3%	69.1%
A	22.2%	25.9%

Moody's Rating

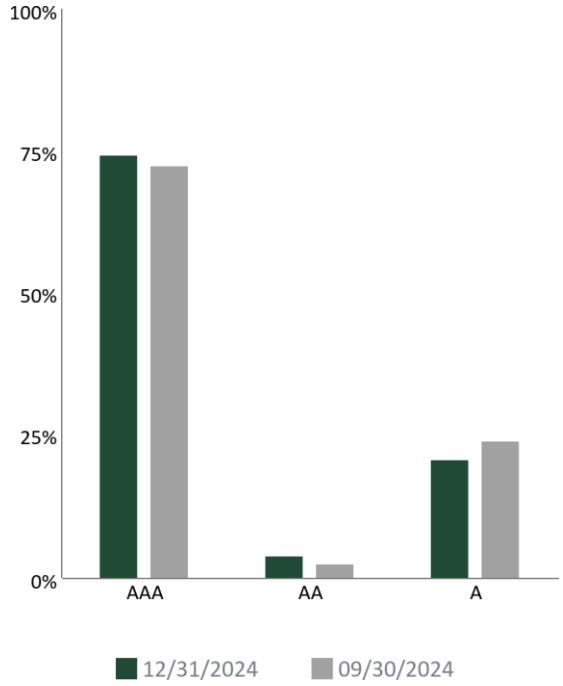

Rating	12/31/2024	09/30/2024
AAA	74.6%	72.8%
AA	4.3%	2.6%
A	21.1%	24.6%

Fitch Rating

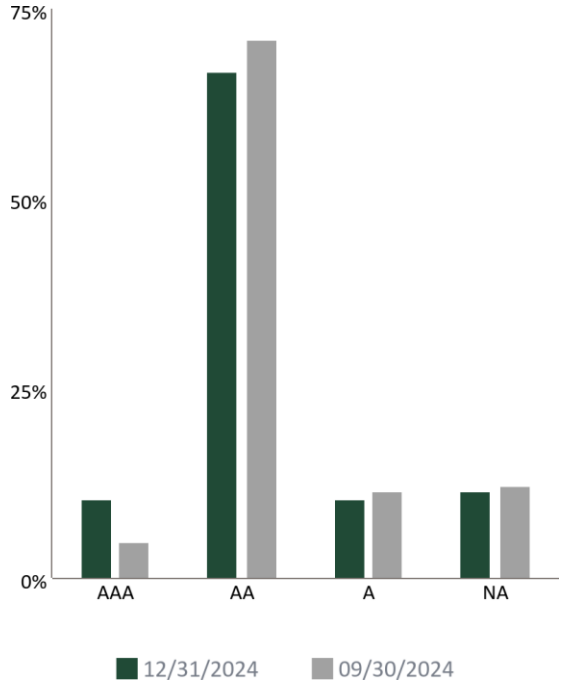

Rating	12/31/2024	09/30/2024
AAA	10.7%	4.9%
AA	67.0%	71.1%
A	10.6%	11.7%
NA	11.7%	12.3%

DURATION DISTRIBUTION

City of Rocklin | Account #11014 | As of December 31, 2024

Portfolio Compared to the Benchmark

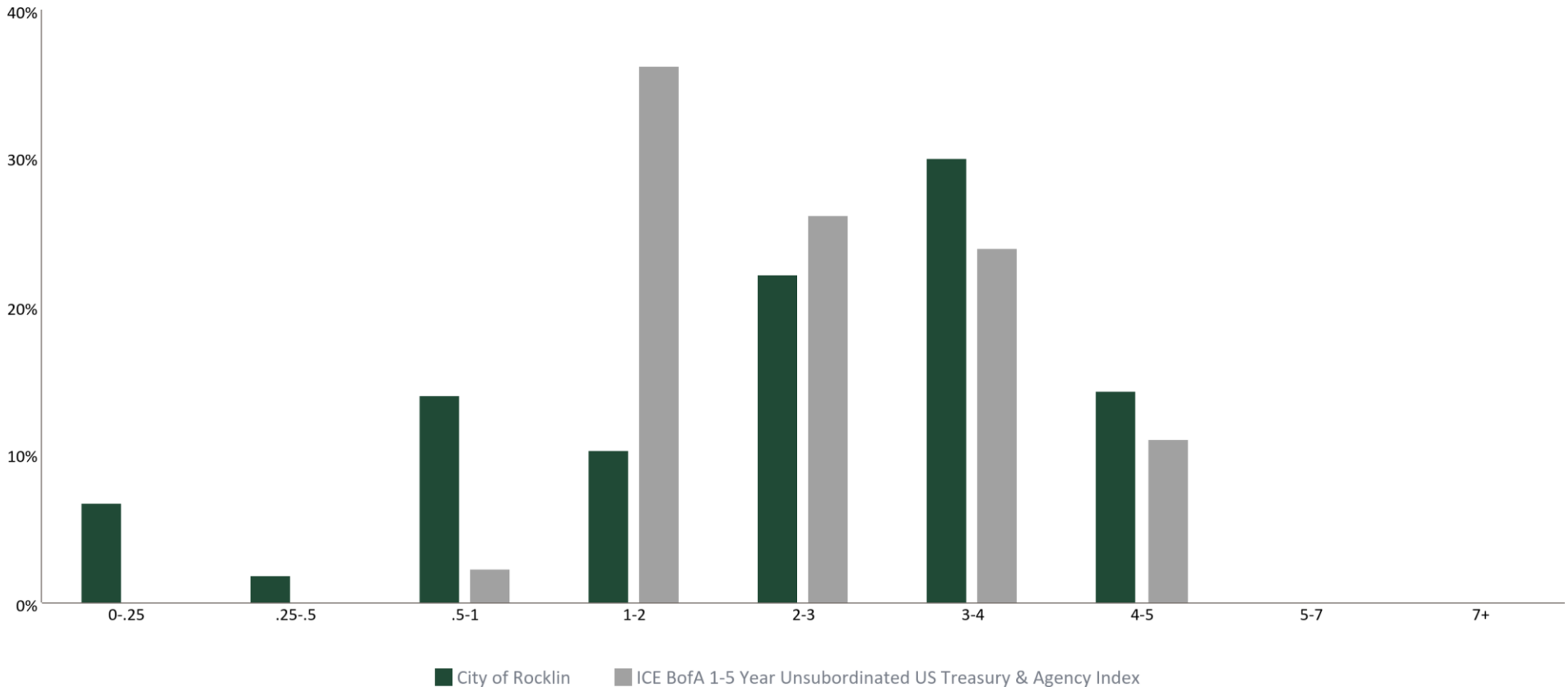

	0-.25	.25-.5	.5-1	1-2	2-3	3-4	4-5	5-7	7+
Portfolio	6.8%	2.0%	14.1%	10.4%	22.3%	30.1%	14.4%	0.0%	0.0%
ICE BofA 1-5 Year Unsubordinated US Treasury & Agency Index	0.0%	0.0%	2.4%	36.3%	26.3%	24.0%	11.0%	0.0%	0.0%

INVESTMENT PERFORMANCE

City of Rocklin | Account #11014 | As of December 31, 2024

Total Rate of Return : Inception | 03/01/2023

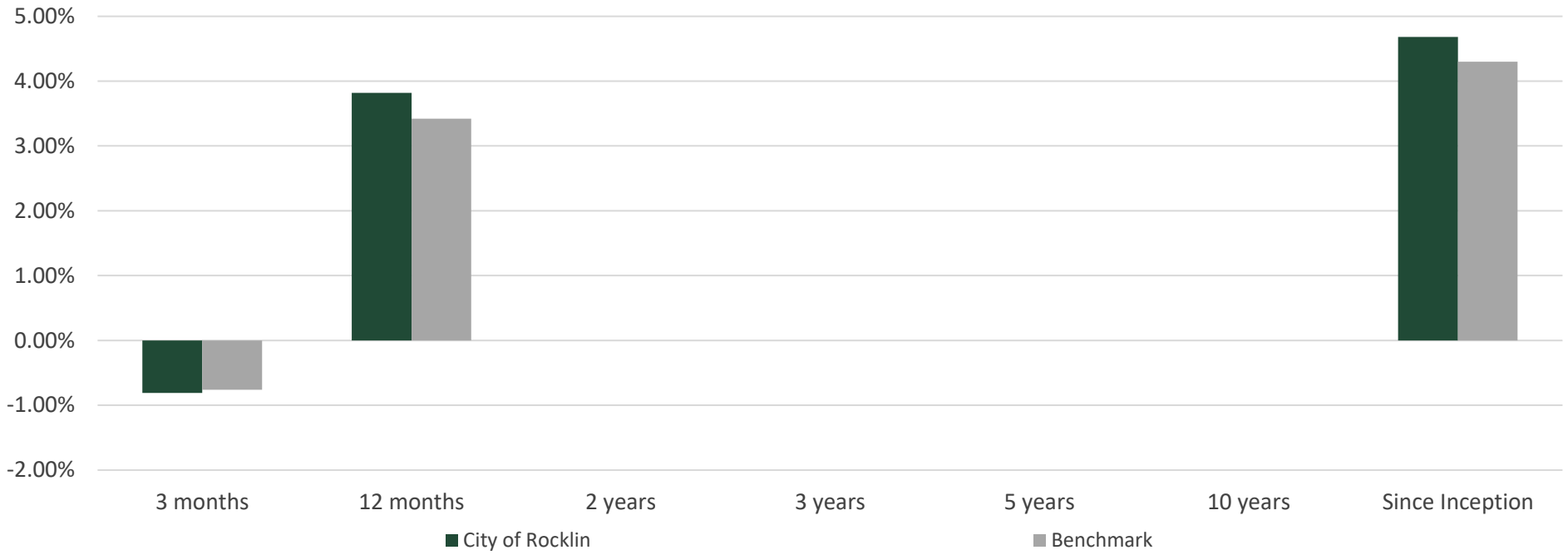

	3 Months	12 Months	2 Years	3 Years	5 Years	10 Years	Since Inception
TOTAL RATE OF RETURN							
City of Rocklin	(0.81%)	3.82%					4.68%
Benchmark	*(0.76%)*	*3.42%*					*4.30%*

*Periods over 1 year are annualized.
Benchmark: ICE BofA 1-5 Year Unsubordinated US Treasury & Agency Index
Total rate of return: A measure of a portfolio's performance over time. It is the internal rate of return, which equates the beginning value of the portfolio with the ending market value; it includes interest earnings, realized and unrealized gains and losses in the portfolio.

PORTFOLIO CHARACTERISTICS

City of Rocklin Liquidity | Account #11170 | As of December 31, 2024

	Benchmark*	12/31/2024 Portfolio	9/30/2024 Portfolio
Average Maturity (yrs)	0.16	0.22	0.25
Average Modified Duration	0.15	0.21	0.24
Average Purchase Yield		4.77%	4.93%
Average Market Yield	4.26%	4.29%	4.63%
Average Quality**	AA+	AAA	AAA
Total Market Value		12,649,664	17,642,828

*Benchmark: ICE BofA 3-Month US Treasury Bill Index
**The credit quality is a weighted average calculation of the highest of S&P, Moody's and Fitch.

SECTOR DISTRIBUTION

City of Rocklin Liquidity | Account #11170 | As of December 31, 2024

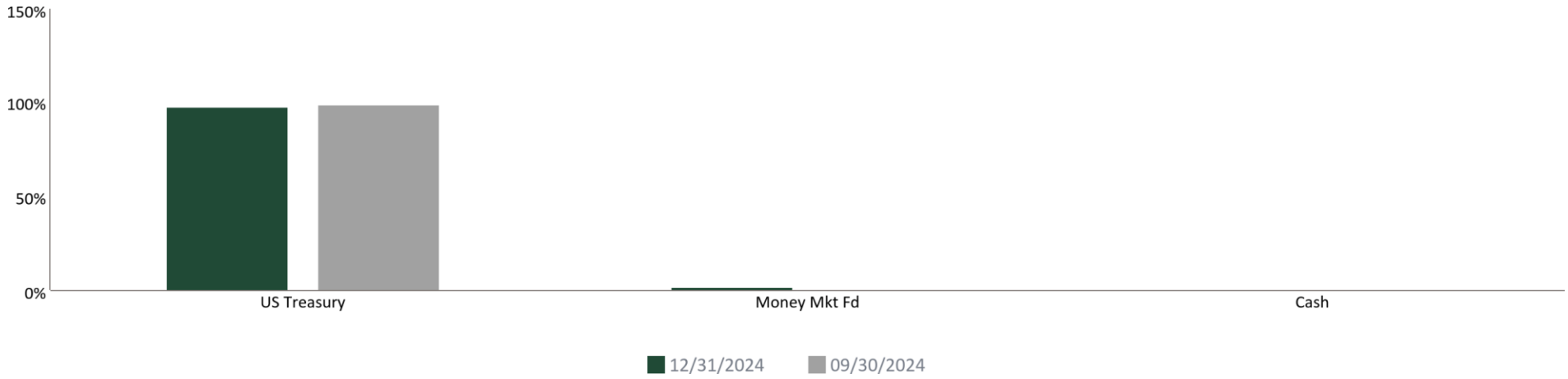

Sector as a Percentage of Market Value

Sector	12/31/2024	09/30/2024
US Treasury	97.91%	99.31%
Money Mkt Fd	2.00%	0.68%
Cash	0.09%	0.01%

ISSUERS

City of Rocklin Liquidity | Account #11170 | As of December 31, 2024

Issuer	Investment Type	% Portfolio
Government of The United States	US Treasury	97.91%
First American Govt Oblig fund	Money Mkt Fd	2.00%
Cash	Cash	0.09%
TOTAL		**100.00%**

CHANDLER ASSET MANAGEMENT

CONSOLIDATED INFORMATION

PORTFOLIO CHARACTERISTICS

City of Rocklin Cons Agg | Account #11171 | As of December 31, 2024

	12/31/2024 Portfolio	9/30/2024 Portfolio
Average Maturity (yrs)	2.35	2.27
Average Modified Duration	2.11	2.06
Average Purchase Yield	4.31%	4.41%
Average Market Yield	4.40%	4.04%
Average Quality**	AA	AA
Total Market Value	75,092,392	75,356,447

*Benchmark: NO BENCHMARK REQUIRED
**The credit quality is a weighted average calculation of the highest of S&P, Moody's and Fitch.

SECTOR DISTRIBUTION

City of Rocklin Cons Agg | Account #11171 | As of December 31, 2024

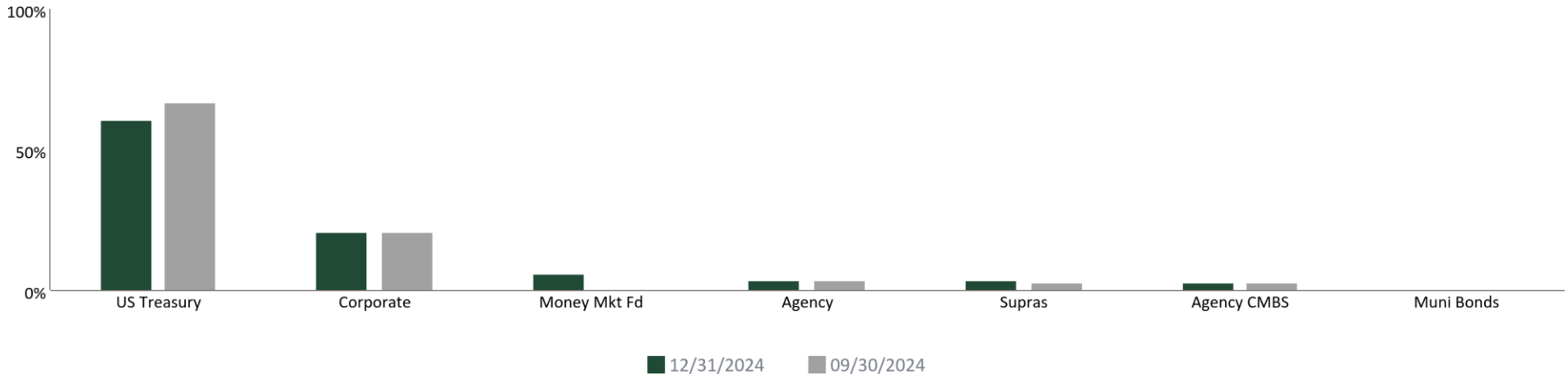

Sector as a Percentage of Market Value

Sector	12/31/2024	09/30/2024
US Treasury	60.98%	66.99%
Corporate	20.86%	21.44%
Money Mkt Fd	6.00%	0.68%
Agency	4.20%	4.29%
Supras	3.91%	3.31%
Agency CMBS	3.26%	3.28%
Muni Bonds	0.79%	--

CHANDLER ASSET MANAGEMENT

PORTFOLIO HOLDINGS

HOLDINGS REPORT

CHANDLER ASSET MANAGEMENT

City of Rocklin | Account #11014 | As of December 31, 2024

Cusip	Security Description	Par Value/ Units	Purchase Date Purchase Yield	Cost Value Book Value	Mkt Price Mkt YTM	Market Value Accrued Int.	% of Port. Gain/Loss	Moody's/ S&P/ Fitch	Maturity Duration
AGENCY									
3133EPME2	FEDERAL FARM CREDIT BANKS FUNDING CORP 3.875 06/08/2028	650,000.00	06/07/2023 3.96%	647,426.00 648,233.28	98.40 4.38%	639,572.02 1,609.20	1.03% (8,661.26)	Aaa/AA+ AA+	3.44 3.17
3130AWN63	FEDERAL HOME LOAN BANKS 4.0 06/30/2028	1,000,000.00	07/13/2023 4.06%	997,340.00 998,127.88	99.25 4.23%	992,454.33 111.11	1.60% (5,673.55)	Aaa/AA+ AA+	3.50 3.23
3133EPSK2	FEDERAL FARM CREDIT BANKS FUNDING CORP 4.25 08/07/2028	500,000.00	08/17/2023 4.49%	494,755.00 496,196.51	99.51 4.40%	497,534.92 8,500.00	0.80% 1,338.41	Aaa/AA+ AA+	3.60 3.25
3133ERAK7	FEDERAL FARM CREDIT BANKS FUNDING CORP 4.375 04/10/2029	1,000,000.00	04/19/2024 4.72%	985,040.00 987,134.73	99.92 4.39%	999,176.23 9,843.75	1.61% 12,041.50	Aaa/AA+ AA+	4.27 3.82
Total Agency		**3,150,000.00**	**4.32%**	**3,124,561.00 3,129,692.39**	**99.33 4.34%**	**3,128,737.50 20,064.06**	**5.05% (954.89)**	**Aaa/AA+ AA+**	**3.75 3.41**
AGENCY CMBS									
3137BVZ82	FHMS K-063 A2 3.43 01/25/2027	1,000,000.00	12/08/2022 4.22%	970,156.25 985,266.70	97.83 4.53%	978,347.60 2,858.33	1.58% (6,919.10)	Aaa/AA+ AAA	2.07 1.82
3137F1G44	FHMS K-065 A2 3.243 04/25/2027	500,000.00	12/27/2022 4.33%	478,574.22 488,679.93	97.09 4.56%	485,444.85 1,351.25	0.78% (3,235.08)	Aaa/AA+ AAA	2.31 2.10
3137F2LJ3	FHMS K-066 A2 3.117 06/25/2027	1,000,000.00	12/15/2022 4.06%	961,406.25 979,063.37	96.71 4.56%	967,102.10 2,597.50	1.56% (11,961.27)	Aaa/AA+ AAA	2.48 2.19
Total Agency CMBS		**2,500,000.00**	**4.18%**	**2,410,136.72 2,453,010.00**	**97.24 4.55%**	**2,430,894.55 6,807.08**	**3.93% (22,115.45)**	**Aaa/AA+ AAA**	**2.28 2.03**
CASH									
CCYUSD	Receivable	2,360.87	-- 0.00%	2,360.87 2,360.87	1.00 0.00%	2,360.87 0.00	0.00% 0.00	Aaa/AAA AAA	0.00 0.00
Total Cash		**2,360.87**	**0.00%**	**2,360.87 2,360.87**	**1.00 0.00%**	**2,360.87 0.00**	**0.00% 0.00**	**Aaa/AAA AAA**	**0.00 0.00**
CORPORATE									
756109BE3	REALTY INCOME CORP 4.625 11/01/2025	500,000.00	-- 4.72%	498,730.00 499,633.45	99.87 4.77%	499,372.26 3,854.17	0.81% (261.19)	A3/A- NA	0.84 0.80

City of Rocklin | Account #11014 | As of December 31, 2024

Cusip	Security Description	Par Value/ Units	Purchase Date Purchase Yield	Cost Value Book Value	Mkt Price Mkt YTM	Market Value Accrued Int.	% of Port. Gain/Loss	Moody's/ S&P/ Fitch	Maturity Duration
14913R3B1	CATERPILLAR FINANCIAL SERVICES CORP 4.8 01/06/2026	750,000.00	-- 4.60%	754,040.00 751,375.70	100.28 4.51%	752,102.92 17,500.00	1.21% 727.21	A2/A A+	1.02 0.95
63743HFH0	NATIONAL RURAL UTILITIES COOPERATIVE FINANCE CORP 4.45 03/13/2026	250,000.00	02/07/2023 4.73%	248,000.00 249,226.95	99.78 4.63%	249,457.85 3,337.50	0.40% 230.90	A2/A- A	1.20 1.14
438516BL9	HONEYWELL INTERNATIONAL INC 2.5 11/01/2026	650,000.00	12/13/2022 4.24%	609,862.50 631,050.11	96.52 4.50%	627,392.21 2,708.33	1.01% (3,657.90)	A2/A A	1.84 1.75
26444HAC5	DUKE ENERGY FLORIDA LLC 3.2 01/15/2027	500,000.00	12/29/2022 4.60%	474,475.00 487,107.54	97.36 4.57%	486,820.01 7,377.78	0.79% (287.53)	A1/A WR	2.04 1.91
74340XBN0	PROLOGIS LP 2.125 04/15/2027	500,000.00	12/27/2022 4.71%	450,040.00 473,426.89	94.53 4.68%	472,638.50 2,243.06	0.76% (788.39)	A3/A WR	2.29 2.18
78016FZS6	ROYAL BANK OF CANADA 4.24 08/03/2027	250,000.00	12/16/2022 4.67%	245,507.50 247,486.12	98.81 4.73%	247,035.40 4,357.78	0.40% (450.71)	A1/A AA-	2.59 2.38
24422EWK1	JOHN DEERE CAPITAL CORP 4.15 09/15/2027	500,000.00	12/07/2022 4.43%	494,055.00 496,629.69	99.03 4.53%	495,165.50 6,109.72	0.80% (1,464.19)	A1/A A+	2.71 2.50
89115A2H4	TORONTO-DOMINION BANK 4.693 09/15/2027	250,000.00	12/16/2022 4.71%	249,847.50 249,913.00	99.78 4.78%	249,444.81 3,454.57	0.40% (468.19)	A2/A- AA-	2.71 2.48
91324PDE9	UNITEDHEALTH GROUP INC 2.95 10/15/2027	750,000.00	-- 4.34%	704,875.00 723,926.49	95.70 4.61%	717,771.21 4,670.83	1.16% (6,155.28)	A2/A+ A	2.79 2.62
037833DK3	APPLE INC 3.0 11/13/2027	500,000.00	12/16/2022 4.19%	473,720.00 484,634.50	96.56 4.29%	482,781.78 2,000.00	0.78% (1,852.72)	Aaa/AA+ NA	2.87 2.70
69371RS31	PACCAR FINANCIAL CORP 4.6 01/10/2028	250,000.00	01/17/2023 4.29%	253,425.00 252,081.02	99.81 4.67%	249,528.16 5,462.50	0.40% (2,552.86)	A1/A+ NA	3.03 2.73
89115A2M3	TORONTO-DOMINION BANK 5.156 01/10/2028	250,000.00	01/17/2023 4.78%	254,137.50 252,513.92	100.50 4.97%	251,252.35 6,122.75	0.41% (1,261.57)	A2/A- AA-	3.03 2.70
89236TKQ7	TOYOTA MOTOR CREDIT CORP 4.625 01/12/2028	615,000.00	01/09/2023 4.64%	614,594.10 614,754.15	99.79 4.70%	613,723.58 13,352.76	0.99% (1,030.57)	A1/A+ A+	3.03 2.73
78016FZW7	ROYAL BANK OF CANADA 4.9 01/12/2028	245,000.00	01/09/2023 4.91%	244,870.15 244,923.42	100.07 4.88%	245,165.78 5,635.68	0.40% 242.37	A1/A AA-	3.03 2.72
06051GGF0	BANK OF AMERICA CORP 3.824 01/20/2028	600,000.00	01/17/2023 5.11%	572,508.00 585,826.57	97.83 5.33%	586,999.80 10,261.07	0.95% 1,173.23	A1/A- AA-	3.05 1.91
61747YEK7	MORGAN STANLEY 2.475 01/21/2028	600,000.00	01/18/2023 4.97%	546,606.00 572,409.86	95.30 5.07%	571,778.45 6,600.00	0.92% (631.41)	A1/A- A+	3.06 1.94

HOLDINGS REPORT

CHANDLER ASSET MANAGEMENT

City of Rocklin | Account #11014 | As of December 31, 2024

Cusip	Security Description	Par Value/ Units	Purchase Date Purchase Yield	Cost Value Book Value	Mkt Price Mkt YTM	Market Value Accrued Int.	% of Port. Gain/Loss	Moody's/ S&P/ Fitch	Maturity Duration
46625HRY8	JPMORGAN CHASE & CO 3.782 02/01/2028	565,000.00	01/30/2023 4.74%	541,219.15 550,335.58	97.88 5.20%	553,016.03 8,903.46	0.89% 2,680.46	A1/A AA-	3.09 1.94
931142FB4	WALMART INC 3.9 04/15/2028	750,000.00	-- 3.97%	747,942.50 748,537.09	98.18 4.50%	736,338.50 6,175.00	1.19% (12,198.59)	Aa2/AA AA	3.29 3.02
89115A2U5	TORONTO-DOMINION BANK 5.523 07/17/2028	250,000.00	08/04/2023 5.33%	252,042.50 251,463.13	101.63 5.01%	254,081.03 6,290.08	0.41% 2,617.90	A2/A- AA-	3.54 3.11
78016HZS2	ROYAL BANK OF CANADA 5.2 08/01/2028	250,000.00	08/04/2023 5.34%	248,485.00 248,911.20	100.83 4.94%	252,073.63 5,416.67	0.41% 3,162.43	A1/A AA-	3.59 3.17
74456QBX3	PUBLIC SERVICE ELECTRIC AND GAS CO 3.65 09/01/2028	650,000.00	11/30/2023 4.92%	615,478.50 623,327.01	96.18 4.80%	625,145.81 7,908.33	1.01% 1,818.80	A1/A WR	3.67 3.34
89236TLL7	TOYOTA MOTOR CREDIT CORP 4.65 01/05/2029	500,000.00	01/12/2024 4.46%	504,095.00 503,305.33	99.34 4.83%	496,703.76 11,366.67	0.80% (6,601.57)	A1/A+ A+	4.01 3.53
24422EXH7	JOHN DEERE CAPITAL CORP 4.5 01/16/2029	600,000.00	01/12/2024 4.38%	603,108.00 602,512.27	99.09 4.75%	594,568.65 12,375.00	0.96% (7,943.62)	A1/A A+	4.04 3.58
532457CK2	ELI LILLY AND CO 4.5 02/09/2029	415,000.00	02/07/2024 4.51%	414,726.10 414,775.12	99.46 4.65%	412,752.32 7,366.25	0.67% (2,022.80)	A1/A+ NA	4.11 3.64
437076CW0	HOME DEPOT INC 4.9 04/15/2029	700,000.00	04/16/2024 5.18%	691,593.00 692,782.80	100.88 4.67%	706,192.32 7,241.11	1.14% 13,409.52	A2/A A	4.29 3.73
341081GT8	FLORIDA POWER & LIGHT CO 5.15 06/15/2029	700,000.00	08/22/2024 4.31%	724,549.00 722,652.82	101.25 4.83%	708,783.84 1,602.22	1.14% (13,868.98)	Aa2/A+ AA-	4.45 3.80
713448FX1	PEPSICO INC 4.5 07/17/2029	710,000.00	-- 4.53%	709,005.50 709,097.00	99.81 4.55%	708,647.47 14,555.00	1.14% (449.53)	A1/A+ NA	4.54 3.98
171239AL0	CHUBB INA HOLDINGS LLC 4.65 08/15/2029	725,000.00	08/20/2024 4.27%	737,020.50 736,126.86	99.48 4.78%	721,235.80 14,140.52	1.16% (14,891.06)	A2/A A	4.62 4.03
69371RT48	PACCAR FINANCIAL CORP 4.0 09/26/2029	350,000.00	09/23/2024 4.05%	349,279.00 349,317.30	96.72 4.78%	338,521.64 3,694.44	0.55% (10,795.66)	A1/A+ NA	4.74 4.20
857449AE2	STATE STREET BANK AND TRUST CO 4.782 11/23/2029	650,000.00	12/09/2024 4.56%	656,376.50 656,298.95	99.69 4.85%	647,983.52 3,108.30	1.05% (8,315.43)	Aa2/AA- AA	4.90 4.29
Total Corporate		**15,775,000.00**	**4.58%**	**15,484,213.50 15,626,361.83**	**98.64 4.74%**	**15,554,474.88 215,191.55**	**25.12% (71,886.95)**	**A1/A A+**	**3.23 2.81**
MONEY MARKET FUND									

City of Rocklin | Account #11014 | As of December 31, 2024

Cusip	Security Description	Par Value/ Units	Purchase Date Purchase Yield	Cost Value Book Value	Mkt Price Mkt YTM	Market Value Accrued Int.	% of Port. Gain/Loss	Moody's/ S&P/ Fitch	Maturity Duration
31846V203	FIRST AMER:GVT OBLG Y	4,218,107.43	-- 4.09%	4,218,107.43 4,218,107.43	1.00 4.09%	4,218,107.43 0.00	6.81% 0.00	Aaa/AAAm AAA	0.00 0.00
Total Money Market Fund		**4,218,107.43**	**4.09%**	**4,218,107.43** **4,218,107.43**	**1.00** **4.09%**	**4,218,107.43** **0.00**	**6.81%** **0.00**	**Aaa/AAAm** **AAA**	**0.00** **0.00**
MUNICIPAL BONDS									
13063EGT7	CALIFORNIA STATE 4.5 08/01/2029	590,000.00	10/30/2024 4.37%	593,109.30 593,006.85	99.82 4.54%	588,908.50 4,130.00	0.95% (4,098.35)	Aa2/AA- AA	4.58 4.02
Total Municipal Bonds		**590,000.00**	**4.37%**	**593,109.30** **593,006.85**	**99.82** **4.54%**	**588,908.50** **4,130.00**	**0.95%** **(4,098.35)**	**Aa2/AA-** **AA**	**4.58** **4.02**
SUPRANATIONAL									
4581X0EH7	INTER-AMERICAN DEVELOPMENT BANK 4.0 01/12/2028	550,000.00	03/19/2024 4.51%	540,254.00 542,256.41	98.89 4.39%	543,901.26 10,327.78	0.88% 1,644.84	Aaa/AAA NA	3.03 2.77
459058KW2	INTERNATIONAL BANK FOR RECONSTRUCTION AND DEVELOPM 4.625 08/01/2028	700,000.00	01/18/2024 4.14%	713,846.00 710,956.18	100.65 4.43%	704,542.59 13,489.58	1.14% (6,413.59)	Aaa/AAA NA	3.59 3.21
4581X0DC9	INTER-AMERICAN DEVELOPMENT BANK 3.125 09/18/2028	700,000.00	01/18/2024 4.14%	670,110.00 676,172.35	95.66 4.40%	669,641.76 6,258.68	1.08% (6,530.58)	Aaa/AAA NA	3.72 3.42
4581X0EN4	INTER-AMERICAN DEVELOPMENT BANK 4.125 02/15/2029	500,000.00	02/16/2024 4.40%	493,885.00 494,942.78	98.78 4.45%	493,879.37 7,791.67	0.80% (1,063.42)	Aaa/AAA NA	4.13 3.69
459058LN1	INTERNATIONAL BANK FOR RECONSTRUCTION AND DEVELOPM 3.875 10/16/2029	515,000.00	10/08/2024 3.93%	513,655.85 513,712.53	97.44 4.48%	501,798.71 4,157.55	0.81% (11,913.82)	Aaa/AAA NA	4.79 4.28
Total Supranational		**2,965,000.00**	**4.22%**	**2,931,750.85** **2,938,040.26**	**98.30** **4.43%**	**2,913,763.69** **42,025.26**	**4.71%** **(24,276.57)**	**Aaa/AAA** **NA**	**3.81** **3.44**
US TREASURY									
91282CEU1	UNITED STATES TREASURY 2.875 06/15/2025	1,250,000.00	01/24/2023 4.02%	1,217,529.30 1,243,855.89	99.40 4.23%	1,242,452.15 1,678.40	2.01% (1,403.74)	Aaa/AA+ AA+	0.45 0.44
91282CEY3	UNITED STATES TREASURY 3.0 07/15/2025	1,250,000.00	12/08/2022 4.12%	1,215,527.34 1,242,916.58	99.35 4.23%	1,241,933.75 17,323.37	2.01% (982.83)	Aaa/AA+ AA+	0.54 0.52

City of Rocklin | Account #11014 | As of December 31, 2024

Cusip	Security Description	Par Value/ Units	Purchase Date Purchase Yield	Cost Value Book Value	Mkt Price Mkt YTM	Market Value Accrued Int.	% of Port. Gain/Loss	Moody's/ S&P/ Fitch	Maturity Duration
91282CFE6	UNITED STATES TREASURY 3.125 08/15/2025	1,250,000.00	01/19/2023 3.88%	1,227,197.27 1,244,505.95	99.31 4.27%	1,241,327.55 14,754.59	2.00% (3,178.40)	Aaa/AA+ AA+	0.62 0.60
91282CFP1	UNITED STATES TREASURY 4.25 10/15/2025	1,250,000.00	12/07/2022 4.02%	1,257,519.53 1,252,071.12	100.03 4.21%	1,250,315.40 11,383.93	2.02% (1,755.72)	Aaa/AA+ AA+	0.79 0.76
91282CFW6	UNITED STATES TREASURY 4.5 11/15/2025	1,250,000.00	12/13/2022 4.00%	1,267,041.02 1,255,078.77	100.19 4.27%	1,252,322.50 7,303.18	2.02% (2,756.27)	Aaa/AA+ AA+	0.87 0.84
91282CGA3	UNITED STATES TREASURY 4.0 12/15/2025	1,250,000.00	12/13/2022 3.91%	1,253,271.48 1,251,038.76	99.83 4.18%	1,247,884.61 2,335.16	2.02% (3,154.14)	Aaa/AA+ AA+	0.96 0.92
91282CGE5	UNITED STATES TREASURY 3.875 01/15/2026	1,250,000.00	02/06/2023 4.09%	1,242,724.61 1,247,430.22	99.67 4.21%	1,245,832.13 22,376.02	2.01% (1,598.10)	Aaa/AA+ AA+	1.04 0.99
9128286X3	UNITED STATES TREASURY 2.125 05/31/2026	1,250,000.00	12/13/2022 3.87%	1,179,541.02 1,221,292.42	97.11 4.26%	1,213,815.01 2,335.16	1.96% (7,477.41)	Aaa/AA+ AA+	1.41 1.36
912828U24	UNITED STATES TREASURY 2.0 11/15/2026	1,250,000.00	12/07/2022 3.81%	1,167,626.95 1,210,875.66	95.98 4.26%	1,199,695.84 3,245.86	1.94% (11,179.83)	Aaa/AA+ AA+	1.87 1.80
912828V98	UNITED STATES TREASURY 2.25 02/15/2027	1,250,000.00	02/06/2023 3.88%	1,174,853.52 1,210,354.99	95.97 4.26%	1,199,569.36 10,623.30	1.94% (10,785.63)	Aaa/AA+ AA+	2.13 2.02
91282CKE0	UNITED STATES TREASURY 4.25 03/15/2027	1,250,000.00	06/25/2024 4.51%	1,241,552.73 1,243,162.14	99.97 4.26%	1,249,674.00 15,849.45	2.02% 6,511.86	Aaa/AA+ AA+	2.20 2.05
91282CEF4	UNITED STATES TREASURY 2.5 03/31/2027	1,200,000.00	01/12/2023 3.68%	1,145,109.38 1,170,770.21	96.29 4.25%	1,155,483.50 7,664.84	1.87% (15,286.70)	Aaa/AA+ AA+	2.25 2.13
91282CFB2	UNITED STATES TREASURY 2.75 07/31/2027	750,000.00	01/18/2024 4.09%	717,363.28 726,174.43	96.31 4.28%	722,304.80 8,631.11	1.17% (3,869.64)	Aaa/AA+ AA+	2.58 2.42
91282CFZ9	UNITED STATES TREASURY 3.875 11/30/2027	1,250,000.00	12/07/2022 3.65%	1,262,695.31 1,257,423.05	98.87 4.29%	1,235,892.10 4,258.24	2.00% (21,530.95)	Aaa/AA+ AA+	2.91 2.71
91282CGC9	UNITED STATES TREASURY 3.875 12/31/2027	1,250,000.00	12/28/2022 3.96%	1,245,334.43 1,247,200.15	98.85 4.29%	1,235,652.40 133.81	2.00% (11,547.75)	Aaa/AA+ AA+	3.00 2.79
9128283W8	UNITED STATES TREASURY 2.75 02/15/2028	1,000,000.00	12/09/2024 4.10%	960,117.19 960,872.29	95.27 4.39%	952,656.00 10,387.23	1.54% (8,216.29)	Aaa/AA+ AA+	3.13 2.91
91282CHE4	UNITED STATES TREASURY 3.625 05/31/2028	1,250,000.00	-- 4.09%	1,224,394.53 1,232,003.66	97.81 4.32%	1,222,620.30 3,983.52	1.97% (9,383.36)	Aaa/AA+ AA+	3.42 3.16
91282CHX2	UNITED STATES TREASURY 4.375 08/31/2028	1,750,000.00	09/08/2023 4.34%	1,752,392.58 1,751,762.82	100.08 4.35%	1,751,390.83 26,014.33	2.83% (371.99)	Aaa/AA+ AA+	3.67 3.30
91282CJF9	UNITED STATES TREASURY 4.875 10/31/2028	800,000.00	10/30/2023 4.83%	801,468.75 801,124.68	101.80 4.36%	814,387.32 6,679.56	1.32% 13,262.65	Aaa/AA+ AA+	3.84 3.44

HOLDINGS REPORT

CHANDLER ASSET MANAGEMENT

City of Rocklin | Account #11014 | As of December 31, 2024

Cusip	Security Description	Par Value/ Units	Purchase Date Purchase Yield	Cost Value Book Value	Mkt Price Mkt YTM	Market Value Accrued Int.	% of Port. Gain/Loss	Moody's/ S&P/ Fitch	Maturity Duration
912810FF0	UNITED STATES TREASURY 5.25 11/15/2028	1,000,000.00	01/18/2024 4.00%	1,054,101.56 1,043,416.35	103.15 4.35%	1,031,500.91 6,816.30	1.67% (11,915.44)	Aaa/AA+ AA+	3.88 3.46
91282CJR3	UNITED STATES TREASURY 3.75 12/31/2028	1,250,000.00	01/17/2024 4.03%	1,234,619.14 1,237,586.48	97.76 4.37%	1,221,939.23 129.49	1.97% (15,647.26)	Aaa/AA+ AA+	4.00 3.66
91282CKD2	UNITED STATES TREASURY 4.25 02/28/2029	800,000.00	03/19/2024 4.31%	797,968.75 798,291.55	99.53 4.37%	796,260.73 11,552.49	1.29% (2,030.82)	Aaa/AA+ AA+	4.16 3.72
9128286T2	UNITED STATES TREASURY 2.375 05/15/2029	500,000.00	05/29/2024 4.66%	450,019.53 455,980.76	92.18 4.36%	460,882.31 1,541.78	0.74% 4,901.55	Aaa/AA+ AA+	4.37 4.06
91282CKT7	UNITED STATES TREASURY 4.5 05/31/2029	1,250,000.00	06/25/2024 4.27%	1,262,841.80 1,261,493.41	100.48 4.38%	1,255,972.98 4,945.05	2.03% (5,520.44)	Aaa/AA+ AA+	4.41 3.95
91282CEV9	UNITED STATES TREASURY 3.25 06/30/2029	1,000,000.00	09/24/2024 3.51%	988,593.75 989,236.54	95.42 4.38%	954,227.05 89.78	1.54% (35,009.49)	Aaa/AA+ AA+	4.50 4.12
91282CLC3	UNITED STATES TREASURY 4.0 07/31/2029	600,000.00	07/30/2024 4.30%	598,429.69 598,562.13	98.42 4.39%	590,490.25 10,043.48	0.95% (8,071.87)	Aaa/AA+ AA+	4.58 4.07
912828YB0	UNITED STATES TREASURY 1.625 08/15/2029	1,000,000.00	09/24/2024 3.48%	917,421.88 921,955.58	88.75 4.34%	887,541.33 6,137.91	1.43% (34,414.25)	Aaa/AA+ AA+	4.62 4.33
91282CLN9	UNITED STATES TREASURY 3.5 09/30/2029	600,000.00	10/23/2024 4.06%	585,140.63 585,709.61	96.22 4.39%	577,316.24 5,365.38	0.93% (8,393.36)	Aaa/AA+ AA+	4.75 4.27
91282CLR0	UNITED STATES TREASURY 4.125 10/31/2029	550,000.00	11/19/2024 4.38%	547,121.09 547,188.04	98.85 4.39%	543,666.00 3,885.70	0.88% (3,522.04)	Aaa/AA+ AA+	4.83 4.30
91282CMA6	UNITED STATES TREASURY 4.125 11/30/2029	600,000.00	12/05/2024 4.11%	600,468.75 600,462.05	98.86 4.38%	593,183.27 2,175.82	0.96% (7,278.78)	Aaa/AA+ AA+	4.91 4.38
91282CMD0	UNITED STATES TREASURY 4.375 12/31/2029	1,500,000.00	12/30/2024 4.38%	1,499,531.25 1,499,531.51	99.95 4.39%	1,499,246.46 181.28	2.42% (285.05)	Aaa/AA+ AA+	5.00 4.44
Total US Treasury		**33,650,000.00**	**4.06%**	**33,089,518.04 33,309,327.78**	**98.40 4.30%**	**33,087,436.31 229,825.52**	**53.43% (221,891.47)**	**Aaa/AA+ AA+**	**2.75 2.52**
Total Portfolio		**62,850,468.30**	**4.22%**	**61,853,757.72 62,269,907.42**	**91.83 4.42%**	**61,924,683.73 518,043.47**	**100.00% (345,223.69)**	**Aa1/AA AA+**	**2.78 2.50**
Total Market Value + Accrued						**62,442,727.20**			

HOLDINGS REPORT

CHANDLER ASSET MANAGEMENT

City of Rocklin Liquidity | Account #11170 | As of December 31, 2024

Cusip	Security Description	Par Value/ Units	Purchase Date Purchase Yield	Cost Value Book Value	Mkt Price Mkt YTM	Market Value Accrued Int.	% of Port. Gain/Loss	Moody's/ S&P/ Fitch	Maturity Duration
CASH									
CCYUSD	Receivable	11,518.00	-- 0.00%	11,518.00 11,518.00	1.00 0.00%	11,518.00 0.00	0.09% 0.00	Aaa/AAA AAA	0.00 0.00
Total Cash		**11,518.00**	**0.00%**	**11,518.00** **11,518.00**	**1.00** **0.00%**	**11,518.00** **0.00**	**0.09%** **0.00**	**Aaa/AAA** **AAA**	**0.00** **0.00**
MONEY MARKET FUND									
31846V203	FIRST AMER:GVT OBLG Y	252,744.64	-- 4.09%	252,744.64 252,744.64	1.00 4.09%	252,744.64 0.00	2.00% 0.00	Aaa/AAAm AAA	0.00 0.00
Total Money Market Fund		**252,744.64**	**4.09%**	**252,744.64** **252,744.64**	**1.00** **4.09%**	**252,744.64** **0.00**	**2.00%** **0.00**	**Aaa/AAAm** **AAA**	**0.00** **0.00**
US TREASURY									
912797MK0	UNITED STATES TREASURY 02/13/2025	7,400,000.00	08/15/2024 5.00%	7,221,033.84 7,357,483.18	99.51 4.32%	7,363,401.89 0.00	58.21% 5,918.72	P-1/A-1+ F1+	0.12 0.11
912797LB1	UNITED STATES TREASURY 05/15/2025	5,100,000.00	11/15/2024 4.47%	4,991,127.04 5,018,039.46	98.47 4.26%	5,021,999.89 0.00	39.70% 3,960.43	P-1/A-1+ F1+	0.37 0.36
Total US Treasury		**12,500,000.00**	**4.79%**	**12,212,160.88** **12,375,522.63**	**99.09** **4.30%**	**12,385,401.78** **0.00**	**97.91%** **9,879.15**	**P-1/A-1+** **F1+**	**0.22** **0.21**
Total Portfolio		**12,764,262.64**	**4.77%**	**12,476,423.52** **12,639,785.27**	**97.04** **4.29%**	**12,649,664.42** **0.00**	**100.00%** **9,879.15**	**Aaa/AAA** **AAA**	**0.22** **0.21**
Total Market Value + Accrued						**12,649,664.42**			

CHANDLER ASSET MANAGEMENT

TRANSACTIONS

TRANSACTION LEDGER

CHANDLER ASSET MANAGEMENT

City of Rocklin | Account #11014|10/01/2024 Through 12/31/2024|

Transaction Type	Settlement Date	CUSIP	Quantity	Security Description	Price	Acq/Disp Yield	Amount	Interest Pur/Sold	Total Amount	Gain/Loss
ACQUISITIONS										
Purchase	10/16/2024	459058LN1	515,000.00	INTERNATIONAL BANK FOR RECONSTRUCTION AND DEVELOPM 3.875 10/16/2029	99.739	3.93%	(513,655.85)	0.00	(513,655.85)	0.00
Purchase	10/24/2024	91282CLN9	600,000.00	UNITED STATES TREASURY 3.5 09/30/2029	97.523	4.06%	(585,140.63)	(1,384.62)	(586,525.25)	0.00
Purchase	11/05/2024	13063EGT7	590,000.00	4.5 08/01/2029	100.527	4.38%	(593,109.30)	0.00	(593,109.30)	0.00
Purchase	11/20/2024	91282CLR0	550,000.00	UNITED STATES TREASURY 4.125 10/31/2029	99.477	4.24%	(547,121.09)	(1,253.45)	(548,374.54)	0.00
Purchase	12/06/2024	91282CMA6	600,000.00	UNITED STATES TREASURY 4.125 11/30/2029	100.078	4.11%	(600,468.75)	(407.97)	(600,876.72)	0.00
Purchase	12/10/2024	857449AE2	650,000.00	STATE STREET BANK AND TRUST CO 4.782 11/23/2029	100.981	4.56%	(656,376.50)	(1,295.13)	(657,671.63)	0.00
Purchase	12/10/2024	9128283W8	1,000,000.00	UNITED STATES TREASURY 2.75 02/15/2028	96.012	4.10%	(960,117.19)	(8,743.21)	(968,860.40)	0.00
Purchase	12/31/2024	91282CMD0	1,500,000.00	UNITED STATES TREASURY 4.375 12/31/2029	99.969	4.38%	(1,499,531.25)	0.00	(1,499,531.25)	0.00
Total Purchase			**6,005,000.00**				**(5,955,520.56)**	**(13,084.38)**	**(5,968,604.94)**	**0.00**
TOTAL ACQUISITIONS			**6,005,000.00**				**(5,955,520.56)**	**(13,084.38)**	**(5,968,604.94)**	**0.00**
DISPOSITIONS										
Sale	10/09/2024	91282CGD7	(750,000.00)	UNITED STATES TREASURY 4.25 12/31/2024	99.930	4.38%	749,472.66	8,748.30	758,220.96	(312.98)
Sale	10/31/2024	91282CGG0	(1,250,000.00)	UNITED STATES TREASURY 4.125 01/31/2025	99.867	4.45%	1,248,339.84	12,890.63	1,261,230.47	(684.68)
Sale	12/06/2024	74340XBX8	(200,000.00)	PROLOGIS LP 4.0 09/15/2028	98.028	4.91%	196,056.00	1,800.00	197,856.00	2,116.32
Sale	12/10/2024	857477CL5	(630,000.00)	STATE STREET CORP 4.993 03/18/2027	101.084	4.99%	636,829.20	7,164.96	643,994.16	6,829.20
Sale	12/10/2024	9128284R8	(1,250,000.00)	UNITED STATES TREASURY 2.875 05/31/2025	99.320	4.27%	1,241,503.91	987.29	1,242,491.20	(761.94)
Total Sale			**(4,080,000.00)**				**4,072,201.61**	**31,591.18**	**4,103,792.79**	**7,185.93**

TRANSACTION LEDGER

City of Rocklin | Account #11014|10/01/2024 Through 12/31/2024|

Transaction Type	Settlement Date	CUSIP	Quantity	Security Description	Price	Acq/Disp Yield	Amount	Interest Pur/Sold	Total Amount	Gain/Loss
TOTAL DISPOSITIONS			**(4,080,000.00)**				**4,072,201.61**	**31,591.18**	**4,103,792.79**	**7,185.93**

TRANSACTION LEDGER

City of Rocklin Liquidity | Account #11170|10/01/2024 Through 12/31/2024|

Transaction Type	Settlement Date	CUSIP	Quantity	Security Description	Price	Acq/Disp Yield	Amount	Interest Pur/Sold	Total Amount	Gain/Loss
ACQUISITIONS										
Purchase	11/18/2024	912797LB1	5,100,000.00	UNITED STATES TREASURY 05/15/2025	97.865	4.47%	(4,991,127.04)	0.00	(4,991,127.04)	0.00
Total Purchase			**5,100,000.00**				**(4,991,127.04)**	**0.00**	**(4,991,127.04)**	**0.00**
TOTAL ACQUISITIONS			**5,100,000.00**				**(4,991,127.04)**	**0.00**	**(4,991,127.04)**	**0.00**
DISPOSITIONS										
Maturity	11/15/2024	91282CDH1	(5,100,000.00)	UNITED STATES TREASURY 0.75 11/15/2024	100.000	0.75%	5,100,000.00	0.00	5,100,000.00	0.00
Maturity	12/12/2024	912797LP0	(5,200,000.00)	UNITED STATES TREASURY 12/12/2024	100.000	0.00%	5,200,000.00	0.00	5,200,000.00	0.00
Total Maturity			**(10,300,000.00)**				**10,300,000.00**	**0.00**	**10,300,000.00**	**0.00**
TOTAL DISPOSITIONS			**(10,300,000.00)**				**10,300,000.00**	**0.00**	**10,300,000.00**	**0.00**

IMPORTANT DISCLOSURES

CHANDLER ASSET MANAGEMENT

2024 Chandler Asset Management, Inc, An Independent Registered Investment Adviser.

Information contained herein is confidential. Prices are provided by ICE Data Services Inc ("IDS"), an independent pricing source. In the event IDS does not provide a price or if the price provided is not reflective of fair market value, Chandler will obtain pricing from an alternative approved third party pricing source in accordance with our written valuation policy and procedures. Our valuation procedures are also disclosed in Item 5 of our Form ADV Part 2A.

Performance results are presented gross-of-advisory fees and represent the client's Total Return. The deduction of advisory fees lowers performance results. These results include the reinvestment of dividends and other earnings. Past performance may not be indicative of future results. Therefore, clients should not assume that future performance of any specific investment or investment strategy will be profitable or equal to past performance levels. All investment strategies have the potential for profit or loss. Economic factors, market conditions or changes in investment strategies, contributions or withdrawals may materially alter the performance and results of your portfolio.

Index returns assume reinvestment of all distributions. Historical performance results for investment indexes generally do not reflect the deduction of transaction and/or custodial charges or the deduction of an investment management fee, the incurrence of which would have the effect of decreasing historical performance results. It is not possible to invest directly in an index.

Source ICE Data Indices, LLC ("ICE"), used with permission. ICE permits use of the ICE indices and related data on an "as is" basis; ICE, its affiliates and their respective third party suppliers disclaim any and all warranties and representations, express and/or implied, including any warranties of merchantability or fitness for a particular purpose or use, including the indices, index data and any data included in, related to, or derived therefrom. Neither ICE data, its affiliates or their respective third party providers guarantee the quality, adequacy, accuracy, timeliness or completeness of the indices or the index data or any component thereof, and the indices and index data and all components thereof are provided on an "as is" basis and licensee's use it at licensee's own risk. ICE data, its affiliates and their respective third party do not sponsor, endorse, or recommend chandler asset management, or any of its products or services.

This report is provided for informational purposes only and should not be construed as a specific investment or legal advice. The information contained herein was obtained from sources believed to be reliable as of the date of publication, but may become outdated or superseded at any time without notice. Any opinions or views expressed are based on current market conditions and are subject to change. This report may contain forecasts and forward-looking statements which are inherently limited and should not be relied upon as indicator of future results. Past performance is not indicative of future results. This report is not intended to constitute an offer, solicitation, recommendation or advice regarding any securities or investment strategy and should not be regarded by recipients as a substitute for the exercise of their own judgment.

Fixed income investments are subject to interest, credit and market risk. Interest rate risk: the value of fixed income investments will decline as interest rates rise. Credit risk: the possibility that the borrower may not be able to repay interest and principal. Low rated bonds generally have to pay higher interest rates to attract investors willing to take on greater risk. Market risk: the bond market in general could decline due to economic conditions, especially during periods of rising interest rates.

Ratings information have been provided by Moody's, S&P and Fitch through data feeds we believe to be reliable as of the date of this statement, however we cannot guarantee its accuracy.

Security level ratings for U.S. Agency issued mortgage-backed securities ("MBS") reflect the issuer rating because the securities themselves are not rated. The issuing U.S. Agency guarantees the full and timely payment of both principal and interest and carries a AA+/Aaa/AAA by S&P, Moody's and Fitch respectively.

CHANDLER ASSET MANAGEMENT

Benchmark	Disclosure
ICE BofA 3-Month US Treasury Bill Index	The ICE BofA US 3-Month Treasury Bill Index is comprised of a single issue purchased at the beginning of the month and held for a full month. At the end of the month that issue is sold and rolled into a newly selected issue. The issue selected at each month-end rebalancing is the outstanding Treasury Bill that matures closest to, but not beyond, three months from the rebalancing date.
ICE BofA 1-5 Yr US Treasury & Agency Index	The ICE BofA 1-5 Year US Treasury & Agency Index tracks the performance of US dollar denominated US Treasury and nonsubordinated US agency debt issued in the US domestic market. Qualifying securities must have an investment grade rating (based on an average of Moody's, S&P and Fitch). Qualifying securities must have at least one year remaining term to final maturity and less than five years remaining term to final maturity, at least 18 months to maturity at time of issuance, a fixed coupon schedule, and a minimum amount outstanding of $1 billion for sovereigns and $250 million for agencies.

OFFICE OF TRISTAN BUTCHER
TREASURER-TAX COLLECTOR

COUNTY OF PLACER

TREASURER'S POOLED INVESTMENT REPORT

For the Month of December 31, 2024

2976 Richardson Drive, Auburn, CA 95603
Phone: (530) 889-4120 | Fax: (530) 889-4123
www.placer.ca.gov/tax

PREFACE

Placer County Treasurer's Pooled Investment Report

December 31, 2024

For the purpose of clarity, the following glossary of investment terms has been provided.

Book Value is the purchase price of a security plus amortization of any premium or discount. This may be more or less than face value, depending upon whether the security was purchased at a premium or at a discount.

Par Value is the principal amount of a security and the amount of principal that will be paid at maturity.

Market Value is the value at which a security can be sold at the time it is priced or the need to sell arises.

Market values are only relevant if the investment is sold prior to maturity. Profit or loss would be realized only if the specific investment were to be sold.

Government Code 53646 Compliance Report

The following information is a monthly update of funds on deposit in the Placer County Treasury pursuant to California Government code Section 53646. Further details of individual investments are included in the Treasurer's Monthly Investment Report. All investment transactions and decisions have been made with full compliance with California Government Code and Placer County's Statement of Investment Policy.

Individual securities are priced at the end of each month by Wells Fargo Bank.

The Weighted Average Maturity of the investments with the Treasury is 539 days.

The ability of the Placer County Treasury to meet its cash flow needs is demonstrated by $733,306,318.40 in cash and investments maturing in the next 180 days.

Placer County

General Fund
Portfolio Management
Portfolio Summary
December 31, 2024

Investments	Par Value	Market Value	Book Value	% of Portfolio	Term	Days to Maturity	YTM 360 Equiv.	YTM 365 Equiv.
LGIP	125,000,000.00	125,000,000.00	125,000,000.00	4.71	1	1	5.147	5.218
U.S. Treasury Coupons	880,000,000.00	866,474,785.54	868,735,702.29	32.71	1,034	583	3.855	3.909
mPower Placer - Long Term	2,978,266.65	2,591,382.17	2,981,288.72	0.11	7,339	4,269	4.068	4.125
Federal Agency Coupons	1,214,000,000.00	1,205,706,310.00	1,213,901,401.88	45.71	1,228	673	3.584	3.634
Collateralized Inactive Bank Deposi	20,000,000.00	20,000,000.00	20,000,000.00	0.75	1	1	4.438	4.500
Negotiable Certificates of Deposit	70,000,000.00	70,053,350.00	70,000,000.00	2.64	327	35	5.363	5.437
Collateralized CDs	23,000,000.00	23,000,000.00	23,000,000.00	0.87	552	31	4.925	4.993
Commercial Paper Disc. -Amortizing	315,000,000.00	313,810,838.90	314,467,225.00	11.84	31	14	4.397	4.458
Local Agency Bond	9,477,882.48	9,126,500.87	9,477,882.48	0.36	7,103	4,756	2.983	3.024
mPower Placer	7,656,940.50	6,336,758.53	7,656,940.50	0.29	7,706	5,210	3.659	3.710
mPower - Folsom	377,103.36	332,927.09	377,103.36	0.01	7,684	4,384	3.446	3.494
Investments	**2,667,490,192.99**	**2,642,432,853.10**	**2,655,597,544.23**	**100.00%**	**973**	**539**	**3.906**	**3.961**
Cash								
Passbook/Checking (not included in yield calculations)	15,306,318.40	15,306,318.40	15,306,318.40		1	1	0.000	0.000
Total Cash and Investments	**2,682,796,511.39**	**2,657,739,171.50**	**2,670,903,862.63**		**973**	**539**	**3.906**	**3.961**

Total Earnings	December 31 Month Ending	Fiscal Year To Date
Current Year	8,408,112.44	44,337,384.54
Average Daily Balance	**2,563,148,924.11**	**2,288,787,766.01**
Effective Rate of Return	**3.86%**	**3.84%**

Jonathan Schmidt 1/10/2025

JONATHAN SCHMIDT, ASST. TREASURER-TAX COLLECTOR

Reporting period 12/01/2024-12/31/2024
Data Updated: FUNDSNAP: 01/09/2025 13:13
Run Date: 01/09/2025 - 13:13

Portfolio PLCR
AC
IE (PRF_PM1) 7.3.11
Report Ver. 7.3.11

General Fund
Portfolio Management
Portfolio Details - Investments
December 31, 2024

CUSIP	Investment #	Issuer	Average Balance	Purchase Date	Par Value	Market Value	Book Value	Stated Rate	YTM 365	Days to Maturity	Maturity Date
LGIP											
LGIP	22486	California Asset Mgm't Prog			60,000,000.00	60,000,000.00	60,000,000.00	5.000	5.000	1	
SYS23345	23345	CalTRUST			65,000,000.00	65,000,000.00	65,000,000.00	5.420	5.420	1	
		Subtotal and Average	**125,000,000.00**		**125,000,000.00**	**125,000,000.00**	**125,000,000.00**		**5.218**	**1**	
U.S. Treasury Coupons											
91282CBH3	20549	U. S. TREASURY COUPON		03/10/2021	10,000,000.00	9,595,100.00	9,955,126.19	0.375	0.773	395	01/31/2026
912828Z52	20551	U. S. TREASURY COUPON		03/10/2021	10,000,000.00	9,976,500.00	10,006,621.13	1.375	0.559	30	01/31/2025
91282CAJ0	20553	U. S. TREASURY COUPON		03/11/2021	10,000,000.00	9,739,300.00	9,972,007.44	0.250	0.680	242	08/31/2025
91282CAB7	20556	U. S. TREASURY COUPON		03/11/2021	10,000,000.00	9,772,600.00	9,976,673.75	0.250	0.660	211	07/31/2025
91282CBH3	20557	U. S. TREASURY COUPON		03/11/2021	10,000,000.00	9,595,100.00	9,957,173.34	0.375	0.753	395	01/31/2026
91282CBQ3	20558	U. S. TREASURY COUPON		03/11/2021	10,000,000.00	9,580,700.00	9,967,590.39	0.500	0.786	423	02/28/2026
912828ZT0	20569	U. S. TREASURY COUPON		03/19/2021	10,000,000.00	9,837,700.00	9,983,346.24	0.250	0.662	150	05/31/2025
912828ZW3	20575	U. S. TREASURY COUPON		03/25/2021	10,000,000.00	9,808,700.00	9,981,993.14	0.250	0.621	180	06/30/2025
91282CAM3	20590	U. S. TREASURY COUPON		04/07/2021	10,000,000.00	9,709,300.00	9,963,523.21	0.250	0.749	272	09/30/2025
912828ZT0	20600	U. S. TREASURY COUPON		04/09/2021	10,000,000.00	9,837,700.00	9,983,579.81	0.250	0.656	150	05/31/2025
91282CAB7	20601	U. S. TREASURY COUPON		04/09/2021	10,000,000.00	9,772,600.00	9,974,446.08	0.250	0.700	211	07/31/2025
91282CAB7	20612	U. S. TREASURY COUPON		04/15/2021	10,000,000.00	9,772,600.00	9,976,871.41	0.250	0.656	211	07/31/2025
91282CEY3	22473	U. S. TREASURY COUPON		04/21/2023	20,000,000.00	19,871,000.00	19,893,210.02	3.000	4.054	195	07/15/2025
9128282A7	22474	U. S. TREASURY COUPON		04/21/2023	20,000,000.00	19,145,600.00	19,306,659.96	1.500	3.799	591	08/15/2026
9128282R0	22475	U. S. TREASURY COUPON		04/21/2023	20,000,000.00	19,010,800.00	19,312,325.62	2.250	3.681	956	08/15/2027
9128283W8	22476	U. S. TREASURY COUPON		04/21/2023	10,000,000.00	9,548,500.00	9,746,113.71	2.750	3.644	1,140	02/15/2028
91282CGG0	22558	U. S. TREASURY COUPON		06/12/2023	5,000,000.00	4,998,850.00	4,997,261.06	4.125	4.825	30	01/31/2025
9128283W8	22593	U. S. TREASURY COUPON		06/29/2023	20,000,000.00	19,097,000.00	19,206,227.84	2.750	4.161	1,140	02/15/2028
91282CFE6	22609	U. S. TREASURY COUPON		07/06/2023	10,000,000.00	9,930,600.00	9,890,993.84	3.125	5.002	226	08/15/2025
91282CHH7	22612	U. S. TREASURY COUPON		07/10/2023	10,000,000.00	9,982,800.00	9,934,275.79	4.125	4.614	530	06/15/2026
91282CGL9	22613	U. S. TREASURY COUPON		07/10/2023	10,000,000.00	9,973,700.00	9,924,553.10	4.000	4.722	410	02/15/2026
91282CEU1	22614	U. S. TREASURY COUPON		07/10/2023	20,000,000.00	19,879,200.00	19,821,795.33	2.875	4.968	165	06/15/2025
91282CFE6	22615	U. S. TREASURY COUPON		07/10/2023	15,000,000.00	14,895,900.00	14,846,687.58	3.125	4.882	226	08/15/2025
91282CEQ0	23052	U. S. TREASURY COUPON		08/28/2023	10,000,000.00	9,945,000.00	9,917,387.18	2.750	5.127	134	05/15/2025
91282CHU8	23055	U. S. TREASURY COUPON		08/28/2023	10,000,000.00	10,018,500.00	9,950,545.36	4.375	4.705	591	08/15/2026
91282CGE5	23116	U. S. TREASURY COUPON		10/16/2023	20,000,000.00	19,933,400.00	19,795,399.94	3.875	4.927	379	01/15/2026
91282CHM6	23117	U. S. TREASURY COUPON		10/16/2023	20,000,000.00	20,072,000.00	19,905,782.65	4.500	4.829	560	07/15/2026
912828X88	23118	U. S. TREASURY COUPON		10/16/2023	20,000,000.00	19,153,400.00	18,987,758.22	2.375	4.723	864	05/15/2027
9128284N7	23119	U. S. TREASURY COUPON		10/16/2023	20,000,000.00	19,104,000.00	18,938,546.03	2.875	4.642	1,230	05/15/2028
91282CGE5	23129	U. S. TREASURY COUPON		10/20/2023	10,000,000.00	9,966,700.00	9,877,653.19	3.875	5.137	379	01/15/2026
91282CHM6	23130	U. S. TREASURY COUPON		10/20/2023	10,000,000.00	10,036,000.00	9,918,543.54	4.500	5.073	560	07/15/2026

General Fund
Portfolio Management
Portfolio Details - Investments
December 31, 2024

CUSIP	Investment #	Issuer	Average Balance	Purchase Date	Par Value	Market Value	Book Value	Stated Rate	YTM 365	Days to Maturity	Maturity Date
U.S. Treasury Coupons											
912828X88	23131	U. S. TREASURY COUPON		10/20/2023	15,000,000.00	14,365,050.00	14,151,458.17	2.375	5.014	864	05/15/2027
9128284N7	23132	U. S. TREASURY COUPON		10/20/2023	15,000,000.00	14,328,000.00	14,063,820.03	2.875	4.968	1,230	05/15/2028
91282CHM6	23150	U. S. TREASURY COUPON		11/06/2023	10,000,000.00	10,036,000.00	9,980,397.15	4.500	4.635	560	07/15/2026
91282CGE5	23151	U. S. TREASURY COUPON		11/06/2023	10,000,000.00	9,966,700.00	9,915,718.63	3.875	4.738	379	01/15/2026
91282CHB0	23152	U. S. TREASURY COUPON		11/06/2023	10,000,000.00	9,917,500.00	9,867,935.67	3.625	4.659	499	05/15/2026
9128284V9	23203	U. S. TREASURY COUPON		12/21/2023	20,000,000.00	19,025,200.00	19,314,295.17	2.875	3.920	1,322	08/15/2028
91282CHM6	23204	U. S. TREASURY COUPON		12/21/2023	40,000,000.00	40,144,000.00	40,194,236.93	4.500	4.162	560	07/15/2026
91282CHB0	23205	U. S. TREASURY COUPON		12/21/2023	10,000,000.00	9,917,500.00	9,928,795.66	3.625	4.176	499	05/15/2026
91282CGE5	23206	U. S. TREASURY COUPON		12/21/2023	20,000,000.00	19,933,400.00	19,918,535.05	3.875	4.289	379	01/15/2026
91282CEY3	23399	U. S. TREASURY COUPON		05/28/2024	50,000,000.00	49,677,500.00	49,457,759.53	3.000	5.111	195	07/15/2025
9128282R0	23433	U. S. TREASURY COUPON		07/09/2024	15,000,000.00	14,258,100.00	14,224,094.52	2.250	4.383	956	08/15/2027
9128282R0	23434	U. S. TREASURY COUPON		07/09/2024	20,000,000.00	19,010,800.00	18,970,737.63	2.250	4.372	956	08/15/2027
91282CHH7	24089	U. S. TREASURY COUPON		11/08/2024	20,000,000.00	19,965,600.00	19,973,057.58	4.125	4.220	530	06/15/2026
91282CHX2	24090	U. S. TREASURY COUPON		11/08/2024	10,000,000.00	10,091,390.88	10,152,477.63	4.375	4.167	1,338	08/31/2028
9128284V9	24091	U. S. TREASURY COUPON		11/08/2024	15,000,000.00	14,368,509.38	14,460,106.29	2.875	4.158	1,322	08/15/2028
91282CKS9	24092	U. S. TREASURY COUPON		11/08/2024	15,000,000.00	15,124,200.00	15,133,643.18	4.875	4.215	515	05/31/2026
912828P46	24115	U. S. TREASURY COUPON		12/06/2024	25,000,000.00	24,410,495.24	24,445,183.17	1.625	4.132	410	02/15/2026
91282CHB0	24116	U. S. TREASURY COUPON		12/06/2024	30,000,000.00	29,815,587.02	29,871,506.66	3.625	4.108	499	05/15/2026
91282CHM6	24117	U. S. TREASURY COUPON		12/06/2024	50,000,000.00	51,060,434.78	51,171,603.72	4.500	4.102	560	07/15/2026
91282CGE5	24118	U. S. TREASURY COUPON		12/06/2024	40,000,000.00	40,473,321.74	40,495,395.20	3.875	4.149	379	01/15/2026
91282CJA0	24127	U. S. TREASURY COUPON		12/18/2024	10,000,000.00	10,193,877.75	10,233,391.50	4.625	4.235	1,368	09/30/2028
9128284V9	24128	U. S. TREASURY COUPON		12/18/2024	30,000,000.00	28,830,768.75	28,940,881.13	2.875	4.230	1,322	08/15/2028
		Subtotal and Average	**823,576,352.02**		**880,000,000.00**	**866,474,785.54**	**868,735,702.29**		**3.909**	**583**	
mPower Placer - Long Term											
2015NR-A	2015NR-A	mPower Placer		06/16/2015	808,023.77	702,528.19	808,023.77	4.000	3.999	3,896	09/02/2035
2015NR-BLT	2015NR-BLT	mPower Placer		09/02/2016	1,756,890.17	1,511,558.03	1,756,890.17	4.000	4.000	4,262	09/02/2036
72601FAC2	2018B	Public Finance Authority		06/28/2018	413,352.71	377,295.95	416,374.78	5.050	4.894	5,021	10/01/2038
		Subtotal and Average	**2,981,320.13**		**2,978,266.65**	**2,591,382.17**	**2,981,288.72**		**4.125**	**4,269**	
Federal Agency Coupons											
3133EMMQ2	20500	FEDERAL FARM CREDIT BANK		01/29/2021	10,000,000.00	9,984,700.00	9,999,966.29	0.300	0.310	12	01/13/2025
3133EMYE6	20641	FEDERAL FARM CREDIT BANK		05/04/2021	10,000,000.00	9,562,600.00	9,997,316.67	1.000	1.021	488	05/04/2026
3133EMZ70	21069	FEDERAL FARM CREDIT BANK		08/19/2021	10,000,000.00	9,956,900.00	9,999,454.44	0.480	0.531	40	02/10/2025
3133EM3E0	21107	FEDERAL FARM CREDIT BANK		09/09/2021	10,000,000.00	9,853,200.00	9,999,467.77	0.610	0.624	142	05/23/2025
3133ERGR6	23409	FEDERAL FARM CREDIT BANK		06/05/2024	20,000,000.00	20,090,400.00	20,000,000.00	5.050	5.056	205	07/25/2025

General Fund
Portfolio Management
Portfolio Details - Investments
December 31, 2024

CUSIP	Investment #	Issuer	Average Balance	Purchase Date	Par Value	Market Value	Book Value	Stated Rate	YTM 365	Days to Maturity	Maturity Date
Federal Agency Coupons											
3133ERGP0	23410	FEDERAL FARM CREDIT BANK		06/05/2024	20,000,000.00	20,084,200.00	20,000,000.00	5.060	5.064	187	07/07/2025
3133ERN72	24132	FEDERAL FARM CREDIT BANK		12/19/2024	20,000,000.00	19,919,600.00	20,000,000.00	4.220	4.221	1,112	01/18/2028
3130AKMA1	20499	FEDERAL HOME LOAN BANK		01/29/2021	10,000,000.00	9,977,400.00	9,999,963.36	0.320	0.326	21	01/22/2025
3130AKWV4	20503	FEDERAL HOME LOAN BANK		02/01/2021	10,000,000.00	9,596,100.00	9,999,568.41	0.500	0.504	393	01/29/2026
3130AKMR4	20508	FEDERAL HOME LOAN BANK		02/03/2021	10,000,000.00	9,982,200.00	9,999,940.93	0.330	0.345	14	01/15/2025
3130AKMR4	20509	FEDERAL HOME LOAN BANK		02/03/2021	10,000,000.00	9,982,200.00	9,999,940.93	0.330	0.345	14	01/15/2025
3130ALCV4	20609	FEDERAL HOME LOAN BANK		04/14/2021	10,000,000.00	9,606,700.00	9,980,671.60	0.750	0.923	419	02/24/2026
3130AMHQ8	20689	FEDERAL HOME LOAN BANK		06/01/2021	10,000,000.00	9,943,300.00	10,000,000.00	0.625	0.625	57	02/27/2025
3130ANJD3	21083	FEDERAL HOME LOAN BANK		08/26/2021	5,000,000.00	4,793,100.00	5,000,000.00	1.000	0.820	602	08/26/2026
3130ANRX0	21084	FEDERAL HOME LOAN BANK		08/26/2021	5,000,000.00	4,757,100.00	5,000,000.00	1.250	1.000	602	08/26/2026
3130ANVS6	21092	FEDERAL HOME LOAN BANK		08/30/2021	10,000,000.00	9,477,700.00	10,000,000.00	1.000	1.001	602	08/26/2026
3130ANW22	21093	FEDERAL HOME LOAN BANK		08/30/2021	5,000,000.00	4,808,400.00	5,000,000.00	0.850	0.850	420	02/25/2026
3130AP3J2	21130	FEDERAL HOME LOAN BANK		09/30/2021	10,000,000.00	9,970,700.00	9,999,601.25	0.550	0.600	29	01/30/2025
3130APUS2	21207	FEDERAL HOME LOAN BANK		11/22/2021	5,000,000.00	4,899,100.00	4,997,884.19	1.000	1.146	230	08/19/2025
3130APUN3	21215	FEDERAL HOME LOAN BANK		11/30/2021	4,000,000.00	3,806,160.00	4,000,000.00	1.250	1.250	604	08/28/2026
3130AQB85	21238	FEDERAL HOME LOAN BANK		12/10/2021	10,000,000.00	9,865,100.00	10,000,000.00	1.200	1.200	160	06/10/2025
3130AQCK7	21253	FEDERAL HOME LOAN BANK		12/16/2021	10,000,000.00	9,992,700.00	10,000,000.00	2.500	1.317	15	01/16/2025
3130AQCT8	21256	FEDERAL HOME LOAN BANK		12/17/2021	5,000,000.00	4,776,900.00	5,000,000.00	1.330	1.468	562	07/17/2026
3130AQCN1	21257	FEDERAL HOME LOAN BANK		12/17/2021	10,000,000.00	9,993,200.00	10,000,000.00	2.750	1.254	16	01/17/2025
3130AQCJ0	21258	FEDERAL HOME LOAN BANK		12/17/2021	10,000,000.00	9,951,900.00	10,000,000.00	3.000	1.541	167	06/17/2025
3130AQCL5	21259	FEDERAL HOME LOAN BANK		12/17/2021	15,000,000.00	14,988,300.00	15,000,000.00	2.500	1.300	16	01/17/2025
3130AQEN9	21283	FEDERAL HOME LOAN BANK		12/30/2021	10,000,000.00	9,973,900.00	10,000,000.00	1.000	1.000	29	01/30/2025
3130AQGT4	21311	FEDERAL HOME LOAN BANK		01/21/2022	5,000,000.00	4,995,050.00	4,999,641.57	1.100	1.320	12	01/13/2025
3130AQFG3	21312	FEDERAL HOME LOAN BANK		01/21/2022	5,000,000.00	4,991,450.00	4,999,537.04	1.125	1.295	20	01/21/2025
3130AQNB5	21318	FEDERAL HOME LOAN BANK		01/27/2022	5,000,000.00	4,990,450.00	4,999,909.72	1.750	1.442	26	01/27/2025
3130AVWF5	22491	FEDERAL HOME LOAN BANK		05/03/2023	10,000,000.00	9,908,600.00	10,000,000.00	3.660	3.661	547	07/02/2026
3130AVWE8	22492	FEDERAL HOME LOAN BANK		05/03/2023	10,000,000.00	9,986,700.00	10,000,000.00	4.000	3.961	182	07/02/2025
3130AVWA6	22493	FEDERAL HOME LOAN BANK		05/03/2023	20,000,000.00	19,722,000.00	20,000,000.00	3.725	3.726	912	07/02/2027
3130AVWC2	22494	FEDERAL HOME LOAN BANK		05/03/2023	10,000,000.00	9,779,000.00	10,000,000.00	3.615	3.616	1,097	01/03/2028
3130AW2U3	22511	FEDERAL HOME LOAN BANK		05/16/2023	10,000,000.00	9,860,600.00	10,000,000.00	3.620	3.621	776	02/16/2027
3130AW2V1	22512	FEDERAL HOME LOAN BANK		05/16/2023	10,000,000.00	9,863,100.00	10,000,000.00	3.625	3.626	768	02/08/2027
3130AW2W9	22513	FEDERAL HOME LOAN BANK		05/16/2023	10,000,000.00	9,866,400.00	10,000,000.00	3.635	3.636	761	02/01/2027
3130AW7B0	22527	FEDERAL HOME LOAN BANK		05/23/2023	10,000,000.00	9,939,400.00	10,000,000.00	3.925	3.926	623	09/16/2026
3130AW7C8	22528	FEDERAL HOME LOAN BANK		05/23/2023	10,000,000.00	9,938,000.00	10,000,000.00	3.920	3.921	630	09/23/2026
3130AW7A2	22529	FEDERAL HOME LOAN BANK		05/23/2023	10,000,000.00	9,941,400.00	10,000,000.00	3.930	3.932	611	09/04/2026
3130AW6Z8	22530	FEDERAL HOME LOAN BANK		05/23/2023	10,000,000.00	9,940,800.00	10,000,000.00	3.930	3.931	617	09/10/2026

General Fund
Portfolio Management
Portfolio Details - Investments
December 31, 2024

CUSIP	Investment #	Issuer	Average Balance	Purchase Date	Par Value	Market Value	Book Value	Stated Rate	YTM 365	Days to Maturity	Maturity Date
Federal Agency Coupons											
3130AW6X31	22531	FEDERAL HOME LOAN BANK		05/23/2023	10,000,000.00	9,993,800.00	10,000,000.00	4.180	4.182	250	09/08/2025
3130AW6Y1	22532	FEDERAL HOME LOAN BANK		05/23/2023	10,000,000.00	9,993,900.00	10,000,000.00	4.180	4.182	244	09/02/2025
3130AWFA3	22559	FEDERAL HOME LOAN BANK		06/12/2023	10,000,000.00	9,936,000.00	10,000,000.00	4.060	4.061	980	09/08/2027
3130AWF96	22560	FEDERAL HOME LOAN BANK		06/12/2023	10,000,000.00	9,900,200.00	10,000,000.00	4.020	4.021	1,132	02/07/2028
3130AWFB1	22565	FEDERAL HOME LOAN BANK		06/13/2023	10,000,000.00	9,939,100.00	10,000,000.00	4.070	4.071	973	09/01/2027
3130AWFC9	22566	FEDERAL HOME LOAN BANK		06/13/2023	10,000,000.00	9,900,800.00	10,000,000.00	4.025	4.026	1,139	02/14/2028
3130AWLA6	22600	FEDERAL HOME LOAN BANK		07/06/2023	15,000,000.00	15,051,900.00	15,000,000.00	4.905	4.907	215	08/04/2025
3130AWLB4	22601	FEDERAL HOME LOAN BANK		07/06/2023	10,000,000.00	10,035,200.00	10,000,000.00	4.895	4.897	222	08/11/2025
3130AWL57	22602	FEDERAL HOME LOAN BANK		07/06/2023	20,000,000.00	20,065,000.00	20,000,000.00	4.460	4.461	772	02/12/2027
3130AWL73	22603	FEDERAL HOME LOAN BANK		07/06/2023	10,000,000.00	10,030,700.00	10,000,000.00	4.450	4.451	785	02/25/2027
3130AWL81	22604	FEDERAL HOME LOAN BANK		07/06/2023	10,000,000.00	9,973,300.00	10,000,000.00	4.275	4.276	1,132	02/07/2028
3130AWL65	22605	FEDERAL HOME LOAN BANK		07/06/2023	20,000,000.00	20,061,400.00	20,000,000.00	4.450	4.451	782	02/22/2027
3130AWL99	22606	FEDERAL HOME LOAN BANK		07/06/2023	20,000,000.00	19,942,000.00	20,000,000.00	4.270	4.271	1,147	02/22/2028
3130AWMN7	23031	FEDERAL HOME LOAN BANK		08/16/2023	20,000,000.00	19,998,000.00	19,966,224.67	4.375	4.430	1,255	06/09/2028
3130AWWZ9	23032	FEDERAL HOME LOAN BANK		08/16/2023	10,000,000.00	10,044,500.00	10,000,000.00	4.500	4.502	895	06/15/2027
3130AWX21	23033	FEDERAL HOME LOAN BANK		08/16/2023	10,000,000.00	10,041,000.00	10,000,000.00	4.480	4.480	951	08/10/2027
3130AWX62	23034	FEDERAL HOME LOAN BANK		08/16/2023	10,000,000.00	10,038,500.00	10,000,000.00	4.470	4.470	946	08/05/2027
3130AWX54	23035	FEDERAL HOME LOAN BANK		08/16/2023	10,000,000.00	10,043,200.00	10,000,000.00	4.495	4.497	890	06/10/2027
3130AYBH8	23209	FEDERAL HOME LOAN BANK		12/22/2023	20,000,000.00	20,019,000.00	20,000,000.00	4.460	6.378	190	07/10/2025
3130AYBK1	23210	FEDERAL HOME LOAN BANK		12/22/2023	15,000,000.00	14,729,700.00	15,000,000.00	3.855	3.855	1,286	07/10/2028
3130AYBJ4	23211	FEDERAL HOME LOAN BANK		12/22/2023	15,000,000.00	14,910,300.00	15,000,000.00	4.000	4.001	740	01/11/2027
3130AYGV2	23232	FEDERAL HOME LOAN BANK		01/11/2024	10,000,000.00	9,985,500.00	10,000,000.00	4.193	4.194	581	08/05/2026
3130AYGR1	23233	FEDERAL HOME LOAN BANK		01/11/2024	15,000,000.00	14,974,950.00	15,000,000.00	4.180	4.181	588	08/12/2026
3130AYGU4	23234	FEDERAL HOME LOAN BANK		01/11/2024	20,000,000.00	19,930,800.00	20,000,000.00	4.110	4.110	734	01/05/2027
3130AYGW0	23235	FEDERAL HOME LOAN BANK		01/11/2024	20,000,000.00	19,683,200.00	20,000,000.00	3.985	3.985	1,468	01/08/2029
3130AYGT7	23236	FEDERAL HOME LOAN BANK		01/11/2024	20,000,000.00	19,806,400.00	20,000,000.00	4.020	4.020	1,105	01/11/2028
3130AYGP5	23237	FEDERAL HOME LOAN BANK		01/11/2024	20,000,000.00	19,878,400.00	20,000,000.00	4.050	4.050	917	07/07/2027
3130AYGQ3	23238	FEDERAL HOME LOAN BANK		01/11/2024	20,000,000.00	19,721,600.00	20,000,000.00	3.980	3.980	1,281	07/05/2028
3130AYQF6	23260	FEDERAL HOME LOAN BANK		01/29/2024	30,000,000.00	29,823,300.00	30,000,000.00	4.060	4.061	922	07/12/2027
3130AYQE9	23261	FEDERAL HOME LOAN BANK		01/29/2024	15,000,000.00	14,919,600.00	15,000,000.00	4.070	4.071	881	06/01/2027
3130AYQB5	23262	FEDERAL HOME LOAN BANK		01/29/2024	20,000,000.00	19,722,200.00	20,000,000.00	4.040	4.040	1,486	01/26/2029
3130AYQ90	23263	FEDERAL HOME LOAN BANK		01/29/2024	20,000,000.00	19,792,600.00	20,000,000.00	4.057	4.058	1,279	07/03/2028
3130AYQA7	23264	FEDERAL HOME LOAN BANK		01/29/2024	20,000,000.00	19,801,600.00	20,000,000.00	4.062	4.063	1,247	06/01/2028
3130AYQD1	23265	FEDERAL HOME LOAN BANK		01/29/2024	20,000,000.00	19,871,200.00	20,000,000.00	4.060	4.061	985	09/13/2027
3130AYQC3	23266	FEDERAL HOME LOAN BANK		01/29/2024	15,000,000.00	14,917,650.00	15,000,000.00	4.070	4.071	901	06/21/2027
3130B0Y86	23364	FEDERAL HOME LOAN BANK		04/17/2024	25,000,000.00	25,065,500.00	25,000,000.00	5.160	5.163	124	05/05/2025

General Fund
Portfolio Management
Portfolio Details - Investments
December 31, 2024

CUSIP	Investment #	Issuer	Average Balance	Purchase Date	Par Value	Market Value	Book Value	Stated Rate	YTM 365	Days to Maturity	Maturity Date
Federal Agency Coupons											
3130B0Y94	23365	FEDERAL HOME LOAN BANK		04/17/2024	25,000,000.00	25,068,750.00	25,000,000.00	5.150	5.154	131	05/12/2025
3130B0YB9	23366	FEDERAL HOME LOAN BANK		04/17/2024	25,000,000.00	25,107,250.00	25,000,000.00	5.120	5.127	190	07/10/2025
3130B0YC7	23367	FEDERAL HOME LOAN BANK		04/17/2024	25,000,000.00	25,111,750.00	25,000,000.00	5.110	5.117	201	07/21/2025
3130B0YA1	23368	FEDERAL HOME LOAN BANK		04/17/2024	25,000,000.00	25,073,500.00	25,000,000.00	5.130	5.135	142	05/23/2025
3130B1NB9	23408	FEDERAL HOME LOAN BANK		06/05/2024	20,000,000.00	20,080,600.00	20,000,000.00	5.040	5.040	198	07/18/2025
3130B1NC7	23411	FEDERAL HOME LOAN BANK		06/05/2024	15,000,000.00	15,100,200.00	15,000,000.00	4.710	4.713	569	07/24/2026
3130B1XB8	23436	FEDERAL HOME LOAN BANK		07/10/2024	10,000,000.00	9,975,100.00	10,000,000.00	4.300	4.301	1,261	06/15/2028
3130B4CD1	24129	FEDERAL HOME LOAN BANK		12/19/2024	30,000,000.00	29,721,300.00	30,000,000.00	4.110	4.112	1,353	09/15/2028
3130B4CE94	24130	FEDERAL HOME LOAN BANK		12/19/2024	20,000,000.00	19,689,800.00	20,000,000.00	4.080	4.081	1,724	09/21/2029
3130B4CF6	24131	FEDERAL HOME LOAN BANK		12/19/2024	20,000,000.00	19,701,800.00	20,000,000.00	4.080	4.081	1,661	07/20/2029
3137EAEX3	20417	FED HOME LOAN MORT CORP		12/15/2020	10,000,000.00	9,725,100.00	9,996,766.94	0.375	0.419	265	09/23/2025
3134GXHY3	21206	FED HOME LOAN MORT CORP		11/22/2021	5,000,000.00	4,742,850.00	4,968,453.79	0.750	1.190	538	06/23/2026
3135G05X7	20421	FEDERAL NATIONAL MORT. ASSOC.		12/15/2020	10,000,000.00	9,749,600.00	9,997,092.31	0.375	0.420	236	08/25/2025
		Subtotal and Average	**1,161,639,477.60**		**1,214,000,000.00**	**1,205,706,310.00**	**1,213,901,401.88**		**3.634**	**673**	
Collateralized Inactive Bank Deposi											
SYS19055	19055	Five Star Bank - PIMMA			20,000,000.00	20,000,000.00	20,000,000.00	4.500	4.500	1	
		Subtotal and Average	**20,000,000.00**		**20,000,000.00**	**20,000,000.00**	**20,000,000.00**		**4.500**	**1**	
Negotiable Certificates of Deposit											
85325VKK5	23229	Standard Chartered Bank NY		01/10/2024	20,000,000.00	20,002,600.00	20,000,000.00	5.220	5.293	6	01/07/2025
85325VLP3	23354	Standard Chartered Bank NY		04/10/2024	25,000,000.00	25,024,000.00	25,000,000.00	5.420	5.495	44	02/14/2025
85325VLQ1	23355	Standard Chartered Bank NY		04/10/2024	25,000,000.00	25,026,750.00	25,000,000.00	5.420	5.495	50	02/20/2025
		Subtotal and Average	**70,000,000.00**		**70,000,000.00**	**70,053,350.00**	**70,000,000.00**		**5.437**	**35**	
Collateralized CDs											
SYS22579	22579	Five Star Bank - CD		06/20/2023	10,000,000.00	10,000,000.00	10,000,000.00	4.900	4.968	2	01/03/2025
SYS22580	22580	Five Star Bank - CD		06/20/2023	10,000,000.00	10,000,000.00	10,000,000.00	4.900	4.968	37	02/07/2025
SYS23373	23373	River City Bank		04/19/2024	3,000,000.00	3,000,000.00	3,000,000.00	5.160	5.160	108	04/19/2025
		Subtotal and Average	**23,000,000.00**		**23,000,000.00**	**23,000,000.00**	**23,000,000.00**		**4.993**	**31**	
Commercial Paper Disc. -Amortizing											
22533TN28	24140	Credit Agricole CIB		12/31/2024	35,000,000.00	34,991,716.67	34,995,858.33	4.260	4.320	1	01/02/2025
22533TN28	24141	Credit Agricole CIB		12/31/2024	80,000,000.00	79,981,066.67	79,990,533.33	4.260	4.320	1	01/02/2025
62479LNN1	24114	MUFG BANK LTD/NY		12/06/2024	200,000,000.00	198,838,055.56	199,480,833.34	4.450	4.538	21	01/22/2025

114,972,783.46

General Fund
Portfolio Management
Portfolio Details - Investments
December 31, 2024

CUSIP	Investment #	Issuer	Average Balance	Purchase Date	Par Value	Market Value	Book Value	Stated Rate	YTM 365	Days to Maturity	Maturity Date
		Subtotal and Average	226,883,014.88		315,000,000.00	313,810,838.90	314,467,225.00		4.458	14	
Federal Agency Disc. -Amortizing											
		Subtotal and Average	69,673,896.19								
Local Agency Bond											
SYS16098	16098	Ackerman School District		04/03/2017	4,817,975.68	4,747,199.62	4,817,975.68	2.800	2.800	4,475	04/03/2037
SYS17042	17042	Mid Placer Public School Trans		12/21/2017	128,414.48	127,706.92	128,414.48	2.850	2.850	1,084	12/21/2027
SYS18093	18093	Mid Placer Public School Trans		01/16/2019	474,411.43	467,508.74	474,411.43	3.000	3.000	1,476	01/16/2029
16115	16115	Newcastle Elementary SD		06/30/2017	2,466,082.17	2,193,086.87	2,466,082.17	2.800	2.800	8,215	06/30/2047
SYS23342	23342	Placer Hills Fire Protection		04/03/2024	668,135.43	668,135.43	668,135.43	4.170	4.170	1,553	04/03/2029
SYS23287	23287	Placer CEO Fire		02/01/2024	922,863.29	922,863.29	922,863.29	4.000	4.000	1,492	02/01/2029
		Subtotal and Average	9,527,654.98		9,477,882.48	9,126,500.87	9,477,882.48		3.024	4,756	
mPower Placer											
2016NR-A	2016NR-A	mPower Placer		08/04/2016	2,930,646.45	2,330,713.82	2,930,646.45	3.000	3.042	4,627	09/02/2037
2017 NR	2017 NR	mPower Placer		07/06/2017	19,582.25	15,378.72	19,582.25	3.000	3.042	4,992	09/02/2038
2017 R	2017 R	mPower Placer		07/06/2017	22,503.93	17,673.24	22,503.93	3.000	3.042	4,992	09/02/2038
2018 NR	2018 NR	mPower Placer		07/26/2018	39,242.38	29,416.87	39,242.38	4.500	4.563	5,357	09/02/2039
2018 R	2018 R	mPower Placer		07/12/2018	97,469.43	84,993.34	97,469.43	4.500	4.563	5,357	09/02/2039
2018 S-NR	18003	Pioneer Community Energy		08/09/2018	260,621.29	231,145.02	260,621.29	4.500	4.563	5,357	09/02/2039
2017 S NR	2017 S-NR	Pioneer Community Energy		09/28/2017	112,093.72	85,135.18	112,093.72	3.000	3.042	4,992	09/02/2038
2017 S-R	2017 S-R	Pioneer Community Energy		07/06/2017	1,158,244.63	915,603.96	1,158,244.63	3.000	3.042	4,992	09/02/2038
2018 S-R	2018 S-R	Pioneer Community Energy		07/12/2018	875,820.78	769,522.41	875,820.78	4.500	4.563	5,357	09/02/2039
2019-20 NR	2019-20 NR	Pioneer Community Energy		07/18/2019	-0.01	-0.01	-0.01	4.500	4.563	5,723	09/02/2040
2019-20 R-1	2019-20 R-1	Pioneer Community Energy		07/11/2019	715,399.77	621,653.78	715,399.77	4.500	4.563	5,723	09/02/2040
2020-21 NR	2020-21 NR	Pioneer Community Energy		10/01/2020	0.00	0.00	0.00	4.500	4.563	0	09/02/2041
2020-21 R1	2020-21 R1	Pioneer Community Energy		07/23/2020	657,113.95	568,738.69	657,113.95	4.500	4.563	6,088	09/02/2041
2021-22 R1	2021-22 R1	Pioneer Community Energy		08/26/2021	717,919.50	626,040.16	717,919.50	4.500	4.563	6,453	09/02/2042
2016S R-1	2016S R-1	Sierra Valley Energy Authority		01/26/2017	50,282.43	40,743.35	50,282.43	3.000	3.042	4,627	09/02/2037
		Subtotal and Average	7,656,940.50		7,656,940.50	6,336,758.53	7,656,940.50		3.710	5,210	
mPower - Folsom											
2016-IA3 #2	2016-IA3 #2	mPower Folsom		07/14/2016	71,623.85	62,835.60	71,623.85	3.500	3.549	4,627	09/02/2037
2017-IA3 #3	2017-IA3 #3	mPower Folsom		07/27/2017	27,253.69	23,005.38	27,253.69	2.750	2.788	4,992	09/02/2038
MFIA-2 NR	IA2-NR	mPower Folsom		08/06/2015	0.00	0.00	0.00	3.500	3.549	0	09/02/2036
MFIA-3	MFIA-3	mPower Folsom		09/01/2015	179,632.42	158,768.11	179,632.42	3.500	3.549	4,262	09/02/2036

General Fund
Portfolio Management
Portfolio Details - Investments
December 31, 2024

CUSIP	Investment #	Issuer	Average Balance	Purchase Date	Par Value	Market Value	Book Value	Stated Rate	YTM 365	Days to Maturity	Maturity Date
mPower - Folsom											
MF R-1	MFR-1	mPower Folsom		09/01/2015	98,593.40	88,318.00	98,593.40	3.500	3.549	4,262	09/02/2036
		Subtotal and Average	**377,103.36**		**377,103.36**	**332,927.09**	**377,103.36**		**3.494**	**4,384**	
		Total and Average	**2,563,148,924.11**		**2,667,490,192.99**	**2,642,432,853.10**	**2,655,597,544.23**		**3.961**	**539**	

General Fund
Portfolio Management
Portfolio Details - Cash
December 31, 2024

CUSIP	Investment #	Issuer	Average Balance	Purchase Date	Par Value	Market Value	Book Value	Stated Rate	YTM 365	Days to Maturity
Cash at Bank										
SYS00000	00000	PLACER COUNTY CASH			13,554,831.51	13,554,831.51	13,554,831.51		0.000	1
Undeposited Receipts										
SYS00000VAULT	00000VAULT	PLACER COUNTY CASH			1,751,486.89	1,751,486.89	1,751,486.89		0.000	1
		Average Balance	**0.00**							**1**
		Total Cash and Investments	**2,563,148,924.11**		**2,682,796,511.39**	**2,657,739,171.50**	**2,670,903,862.63**		**3.961**	**539**

Placer County

General Fund
Purchases Report
Sorted by Fund - Fund
December 1, 2024 - December 31, 2024

CUSIP	Investment #	Fund	Sec. Type	Issuer	Original Par Value	Purchase Date	Payment	Principal Purchase	Accrued at Purchase	Rate at Purchas	Maturity Date	YTM	Ending Book Value
General Fund													
22533TM37	24109	1010	ACP	CACPNY	145,000,000.00	12/02/2024	12/03 - At Maturity	144,981,834.72		4.510	12/03/2024	4.511	0.00
313384R92	24110	1010	AFD	FHLBDN	150,000,000.00	12/03/2024	12/04 - At Maturity	149,981,124.99		4.530	12/04/2024	4.593	0.00
313384S26	24111	1010	AFD	FHLBDN	170,000,000.00	12/04/2024	12/05 - At Maturity	169,978,608.32		4.530	12/05/2024	4.593	0.00
313384S34	24112	1010	AFD	FHLBDN	190,000,000.00	12/05/2024	12/06 - At Maturity	189,976,091.66		4.530	12/06/2024	4.593	0.00
313384S67	24113	1010	AFD	FHLBDN	70,000,000.00	12/06/2024	12/09 - At Maturity	69,973,575.00		4.530	12/09/2024	4.595	0.00
62479LNN1	24114	1010	ACP	MUFGBK	200,000,000.00	12/06/2024	01/22 - At Maturity	198,838,055.56		4.450	01/22/2025	4.476	199,480,833.34
912828P46	24115	1010	TRC	UST	25,000,000.00	12/06/2024	02/15 - 08/15	24,277,343.75	124,745.24	1.625	02/15/2026	4.132	24,445,183.17
91282CHB0	24116	1010	TRC	UST	30,000,000.00	12/06/2024	05/15 - 11/15	29,798,437.50	63,087.02	3.625	05/15/2026	4.108	29,871,506.66
91282CHM6	24117	1010	TRC	UST	50,000,000.00	12/06/2024	01/15 - 07/15	50,304,687.50	880,434.78	4.500	07/15/2026	4.102	51,171,603.72
91282CGE5	24118	1010	TRC	UST	40,000,000.00	12/06/2024	01/15 - 07/15	39,881,250.00	606,521.74	3.875	01/15/2026	4.149	40,495,395.20
313384S75	24119	1010	AFD	FHLBDN	95,000,000.00	12/09/2024	12/10 - At Maturity	94,988,045.83		4.530	12/10/2024	4.593	0.00
313384S83	24120	1010	AFD	FHLBDN	100,000,000.00	12/10/2024	12/11 - At Maturity	99,987,416.66		4.530	12/11/2024	4.593	0.00
22533TMC7	24121	1010	ACP	CACPNY	130,000,000.00	12/11/2024	12/12 - At Maturity	129,983,713.89		4.510	12/12/2024	4.511	0.00
22533TMD5	24122	1010	ACP	CACPNY	170,000,000.00	12/12/2024	12/13 - At Maturity	169,978,702.77		4.510	12/13/2024	4.511	0.00
313384T58	24123	1010	AFD	FHLBDN	185,000,000.00	12/13/2024	12/16 - At Maturity	184,930,162.50		4.530	12/16/2024	4.595	0.00
313384T66	24124	1010	AFD	FHLBDN	190,000,000.00	12/16/2024	12/17 - At Maturity	189,976,091.66		4.530	12/17/2024	4.593	0.00
313384T74	24125	1010	AFD	FHLBDN	195,000,000.00	12/17/2024	12/18 - At Maturity	194,975,462.49		4.530	12/18/2024	4.593	0.00
22533TMK9	24126	1010	ACP	CACPNY	155,000,000.00	12/18/2024	12/19 - At Maturity	154,980,581.94		4.510	12/19/2024	4.511	0.00
91282CJA0	24127	1010	TRC	UST	10,000,000.00	12/18/2024	03/31 - 09/30	10,134,375.00	100,377.75	4.625	09/30/2028	4.235	10,233,391.50
9128284V9	24128	1010	TRC	UST	30,000,000.00	12/18/2024	02/15 - 08/15	28,633,593.75	292,968.75	2.875	08/15/2028	4.230	28,940,881.13
22533TML7	24133	1010	ACP	CACPNY	80,000,000.00	12/19/2024	12/20 - At Maturity	79,990,533.33		4.260	12/20/2024	4.260	0.00
3133ERN72	24132	1010	FAC	FFCB	20,000,000.00	12/19/2024	01/18 - 07/18	20,000,000.00		4.220	01/18/2028	4.221	20,000,000.00
3130B4CD1	24129	1010	FAC	FHLB	30,000,000.00	12/19/2024	03/15 - 09/15	30,000,000.00		4.110	09/15/2028	4.112	30,000,000.00
3130B4CE94	24130	1010	FAC	FHLB	20,000,000.00	12/19/2024	03/21 - 09/21	20,000,000.00		4.080	09/21/2029	4.081	20,000,000.00
3130B4CF6	24131	1010	FAC	FHLB	20,000,000.00	12/19/2024	01/20 - 07/20	20,000,000.00		4.080	07/20/2029	4.081	20,000,000.00
22533TMP8	24134	1010	ACP	CACPNY	85,000,000.00	12/20/2024	12/23 - At Maturity	84,969,825.00		4.260	12/23/2024	4.262	0.00
313384U56	24135	1010	AFD	FHLBDN	85,000,000.00	12/23/2024	12/24 - At Maturity	84,990,036.11		4.220	12/24/2024	4.279	0.00
313384U72	24136	1010	AFD	FHLBDN	110,000,000.00	12/24/2024	12/26 - At Maturity	109,974,088.88		4.240	12/26/2024	4.300	0.00
22533TMT0	24137	1010	ACP	CACPNY	110,000,000.00	12/26/2024	12/27 - At Maturity	109,986,983.33		4.260	12/27/2024	4.260	0.00
22533TMW3	24138	1010	ACP	CACPNY	140,000,000.00	12/27/2024	12/30 - At Maturity	139,950,300.00		4.260	12/30/2024	4.262	0.00
22533TMX1	24139	1010	ACP	CACPNY	140,000,000.00	12/30/2024	12/31 - At Maturity	139,983,433.33		4.260	12/31/2024	4.260	0.00
22533TN28	24140	1010	ACP	CACPNY	35,000,000.00	12/31/2024	01/02 - At Maturity	34,991,716.67		4.260	01/02/2025	4.261	34,995,858.33

General Fund
Purchases Report
December 1, 2024 - December 31, 2024

CUSIP	Investment #	Fund	Sec. Type	Issuer	Original Par Value	Purchase Date	Payment	Principal Purchase	Accrued at Purchase	Rate at Purchas	Maturity Date	YTM	Ending Book Value
General Fund													
22533TN28	24141	1010	ACP	CACPNY	80,000,000.00	12/31/2024	01/02 - At Maturity	79,981,066.67		4.260	01/02/2025	4.261	79,990,533.33
				Subtotal	**3,285,000,000.00**			**3,281,377,138.81**	**2,068,135.28**				**589,625,186.38**
			Total Purchases		**3,285,000,000.00**			**3,281,377,138.81**	**2,068,135.28**				**589,625,186.38**

PLACER COUNTY 2024/25
Summary by Issuer
December 31, 2024

Issuer	Number of Investments	Par Value	Remaining Cost	% of Portfolio	Average YTM 365	Average Days to Maturity
Ackerman School District	1	4,817,975.68	4,817,975.68	0.18	2.800	4,475
Credit Agricole CIB	2	115,000,000.00	114,972,783.34	4.32	4.320	1
California Asset Mgm't Prog	1	60,000,000.00	60,000,000.00	2.26	5.000	1
CalTRUST	1	65,000,000.00	65,000,000.00	2.44	5.420	1
FEDERAL FARM CREDIT BANK	7	100,000,000.00	99,963,500.00	3.76	3.117	369
FEDERAL HOME LOAN BANK	80	1,089,000,000.00	1,088,764,550.00	40.95	3.752	710
FED HOME LOAN MORT CORP	2	15,000,000.00	14,880,900.00	0.56	0.675	356
FEDERAL NATIONAL MORT. ASSOC.	1	10,000,000.00	9,979,000.00	0.38	0.420	236
Five Star Bank - PIMMA	1	20,000,000.00	20,000,000.00	0.75	4.500	1
Five Star Bank - CD	2	20,000,000.00	20,000,000.00	0.75	4.968	20
Mid Placer Public School Trans	2	602,825.91	602,825.91	0.02	2.968	1,392
mPower Folsom	5	377,103.36	377,103.36	0.01	3.494	4,384
mPower Placer	7	5,674,358.38	5,674,358.38	0.21	3.511	4,430
MUFG BANK LTD/NY	1	200,000,000.00	198,838,055.56	7.48	4.538	21
Newcastle Elementary SD	1	2,466,082.17	2,466,082.17	0.09	2.800	8,215
Placer Hills Fire Protection	1	668,135.43	668,135.43	0.03	4.170	1,553
Public Finance Authority	1	413,352.71	421,619.76	0.02	4.894	5,021
Pioneer Community Energy	9	4,497,213.63	4,497,213.63	0.17	4.133	5,594
PLACER COUNTY CASH	2	15,306,318.40	15,306,318.40	0.58	0.000	1
Placer CEO Fire	1	922,863.29	922,863.29	0.03	4.000	1,492
River City Bank	1	3,000,000.00	3,000,000.00	0.11	5.160	108
Standard Chartered Bank NY	3	70,000,000.00	70,000,000.00	2.63	5.437	35
Sierra Valley Energy Authority	1	50,282.43	50,282.43	0.00	3.042	4,627

PLACER COUNTY 2024/25
Summary by Issuer
December 31, 2024

Issuer	Number of Investments	Par Value	Remaining Cost	% of Portfolio	Average YTM 365	Average Days to Maturity
U. S. TREASURY COUPON	53	880,000,000.00	857,691,982.33	32.26	3.909	583
Total and Average	**186**	**2,682,796,511.39**	**2,658,895,549.67**	**100.00**	**3.938**	**536**

ROCKLIN
CALIFORNIA

City Council Staff Report

Subject: Various Purchases through Cooperative Purchase Agreements

Date: February 25, 2025

Submitted By: Megan Bressem, Management Analyst
Daniel Choe, Administrative Services Deputy Director

Department: Administrative Services - Finance

Recommendation:
Adopt a Resolution of the City Council of the City of Rocklin Approving and Authorizing the City Manager to Purchase Goods and Services through Cooperative Purchase Agreements for Fiscal Year 2024/25.

Background:
Throughout the year, City departments have a need for ongoing purchasing of goods and services for departmental operations. These purchases are necessary to ensure the continued delivery of programs and services citywide. As part of the annual budget planning process, staff reviewed cooperative purchasing programs and estimated the anticipated costs for goods and services for Fiscal Year (FY) 2024/25 and made recommendations to adopt a resolution to authorize the City Manager to purchase goods and services through cooperative purchasing programs to allow for ongoing purchasing for department operations at competitively bid prices with the listed vendors for FY 2024/25.

On June 25, 2024, the City Council adopted Resolution No. 2024-151 (Attachment 3), authorizing the use of cooperative purchasing agreements consistent with Rocklin Municipal Code Sections 3.04.090(C) and (D). These provisions allow the City to leverage cooperative purchasing programs and piggyback agreements, utilizing contracts established by other governmental agencies.

Subsequently, four additional resolutions (Attachments 4-7) were adopted by the City Council, authorizing increases to the purchasing authorization amounts and contracts with various vendors originally authorized under Resolution No. 2024-151. For ease of administration, those subsequently approved contracts and increase amounts have been incorporated into the Cooperative Purchase Agreements list for FY 2024/25 (Attachment 2).

At this time, staff has identified two vendors requiring increased purchasing authority due to expanded operational and procurement needs:

- Miracle PlaySystems, Inc. – Additional playground equipment purchases, including shade covers at Corral-Alva Park and Gayaldo Park, necessitate an increase in purchasing authority from $125,000 to $350,000 (Attachment 8).
- Motorola Solutions, Inc. – Additional communications equipment, infrastructure, and service purchases require increasing the total not-to-exceed amount from $500,000 to $900,000. Staff also recommends adding State of California Cooperative Agreement No. STPD-SW-1311-01 to the list of approved cooperative purchasing agreements (Attachment 9).

Staff recommends the City Council adopt a resolution (Attachment 1) to authorize the City Manager to purchase goods and services through cooperative purchasing programs to allow for ongoing purchasing for department operations at competitively bid prices with the listed vendors for FY 2024/25.

Fiscal Impact:
Purchasing through these cooperative agreements are made on an as-needed basis and charged to various departments/funds, provided sufficient funds are available in those respective departments/funds in the FY 2024/25 Operating Budget.

ATTACHMENTS:
1. Resolution
2. Resolution Exhibit A - Cooperative Agreements List
3. Resolution No. 2024-151 - Cooperative Purchase Agreements FY 2024/25
4. Resolution No. 2024-224 - Hunt & Sons SACOG Lubricants
5. Resolution No. 2024-225 - Hunt & Sons SACOG Fuel
6. Resolution No. 2024-235 - Increase Purchasing Authorization CDW-G
7. Resolution No. 2024-236 - Increase Purchasing Authorization Dell Marketing LP
8. Miracle PlaySystems Inc. Sourcewell Contract No. 010521-LTS
9. Motorola Solutions Inc. Statewide Contract No. STPD-SW-1311-01 Supplement 10

RESOLUTION NO. 2025-

RESOLUTION OF THE CITY COUNCIL OF THE CITY OF ROCKLIN
APPROVING AND AUTHORIZING THE CITY MANAGER
TO PURCHASE GOODS AND SERVICES THROUGH
COOPERATIVE PURCHASE AGREEMENTS FOR FISCAL YEAR 2024/25

WHEREAS, the City of Rocklin has arrangements/memberships with a number of cooperative purchasing programs that allow member agencies to aggregate individual purchasing power and achieve greater volume discounts than what would be available as a stand-alone agency; and

WHEREAS, using this process, local government agencies can achieve better pricing and streamline purchases by removing repetitive, resource intensive, and costly bid procedures associated with routine purchases; and

WHEREAS, on June 25, 2024, the City Council adopted Resolution No. 2024-151, authorizing the purchase of various goods and services through cooperative purchase agreements under Rocklin Municipal Code sections 3.04.090 (C) and (D); and

WHEREAS, since adoption, staff has identified additional vendors requiring increased purchasing authority due to expanded operational and procurement needs in the amount of up to $350,000 in total purchases from Miracle PlaySystems, Inc. and in the amount of up to $900,000 in total purchases from Motorola Solutions, Inc. for additional playground equipment purchases and communication equipment and service purchases, respectively; and

WHEREAS, four additional resolutions were adopted by the City Council authorizing increases to the purchasing authorization amounts and contracts with various vendors originally authorized under Resolution No. 2024-151. For ease of administration, staff desires to incorporate those subsequently approved contracts and increased amounts to Exhibit A, attached hereto.

NOW, THEREFORE, BE IT RESOLVED by the City Council of the City of Rocklin as follows:

Section 1. The above recitals are true and correct and are incorporated herein.

Section 2. The City Manager may execute one or more contracts, including amendments, and including retroactive contracts or amendments, to purchase goods, services, or both within the scope of the description set forth in Exhibit A or as otherwise provided by the Cooperative Purchasing Agreement listed in Exhibit A. Each contract or amendments must be approved by the City Attorney as to form, and the total not-to-exceed amount of all such contracts shall not exceed the limits specified in Exhibit A.

Section 3. This resolution supersedes Resolution Numbers 2024-151, 2024-224, 2024-225, 2024-235 and 2024-236.

PASSED AND ADOPTED this 25th day of February, 2025, by the following vote:

AYES: Councilmembers:

NOES: Councilmembers:

ABSENT: Councilmembers:

ABSTAIN: Councilmembers:

_____
Jill Gayaldo, Mayor

ATTEST:

_____
Avinta Singh, City Clerk

Exhibit A

Cooperative Purchase Agreements by Vendor and Amount for FY 2024/25

Vendor	Not-to-Exceed Amount	Cooperative Purchase Agreement	Description
Amazon Services, LLC	$150,000	OMNIA Partners #MA3457 OMNIA Partners #R-TC-17006	Office Supplies and general department supplies
American Office Products Distribution (AOPD)/Walker's Office Supplies	$150,000	OMNIA Partners #11-18	Office supplies and furniture, and general department supplies
AT&T Corp.	$160,000	CALNET NextGen – All Categories	Telecommunication services, including but not limited to FirstNet broadband network for first responders
AT&T DataComm	$250,000	CMAS #3-21-08-1074 CMAS #3-21-09-1015 CMAS #3-19-70-0255AL CMAS #3-17-70-0255AH CMAS #3-23-12-1014	Cellular service, business telephone lines, legacy radio circuits, analog copper-based services
AXON (formerly Taser International, Inc.)	$75,000	NASPO ValuePoint #OK-MA-145-015 Sourcewell #101223-AXN NASPO OKMA #145-21-100	Tasers and re-fill cartridges, drones and accessories, and evidence.com services
Caltronics Business Systems/Konica Minolta Business Solutions USA, Inc.	$55,000	CMAS #3-17-36-0037B	Copier service and supplies
Cellco Partnership dba Verizon Wireless	$60,000	NASPO ValuePoint #MA152-1 CMAS #3-21-09-1011	Cellular phone service, wireless data, voice, and accessories
CDW-G	$300,000	OMNIA Partners #23-6692-02 OMNIA Partners #R210401 OMNIA Partners #R220801 OMNIA Partners #MA3458 OMNIA Partners #2018011-01	Barracuda security solutions renewals and network switches and IT related equipment
Curtis Blue Line	$100,000	NPPGov #PS20275	Uniforms and bullet-proof vests
Dell Marketing LP	$125,000	NASPO ValuePoint #AR2495 NASPO ValuePoint #7-23-70-55-01	IT Equipment, including but not limited to various IT licenses, desktop & monitor purchases, etc
General Motors/Future Chevrolet of Sacramento	$100,000	Sourcewell #101520-GNL	Parts and supplies for fleet vehicles
Goodyear/The Goodyear Tire & Rubber Company	$90,000	Sourcewell #102517-GTC NASPO ValuePoint #19101	Tires

Vendor	Not-to-Exceed Amount	Cooperative Purchase Agreement	Description
Herc Rentals Inc.	$110,000	OMNIA Partners #2019000318 CMAS #4-24-05-1052	Construction equipment rentals
Honeywell International, Inc/US Digital Designs, Inc.	$125,000	NPPGov #PS20350	Fire station alerting system, components (parts) and warranty
Hunt & Sons, Inc.	$15,000	SACOG #CT250003	Lubricants
Hunt & Sons, Inc.	$410,000	SACOG #CT250004	Fuel
Lenslock, Inc.	$150,000	NPPGov #PS22120	Body-worn camera, in-car video, surveillance and network services, digital evidence management services
Life Assist, Inc.	$75,000	NPPGov #PS20180	EMS medical supplies and equipment
LION (Authorized Dealer/Distributor Allstar Fire Equipment)	$100,000	NPPGov #PS20065	Uniforms, PPE, equipment, turnout gear, hoses
L.N Curtis & Sons	$100,000	NPPGov #PS20015 NPPGov #PS20105 SCBA H-GAC #EE08-19	Turnout gear, PPE, and equipment
Motorola Solutions, Inc.	$900,000	NASPO ValuePoint #00318 H-GAC #EC07-20 9-1-1 Statewide Contract CaleProcure #STPD-SW-1311-01	Handheld and in-vehicle radios for public safety departments
Oshkosh Corporation/Pierce Manufacturing Inc./Golden State Fire Apparatus, Inc.	$100,000	Sourcewell #113021-OKC-1	Vehicle and equipment parts
PlayPower, Inc. - Miracle Recreation/Miracle PlaySystems, Inc.	$350,000	Sourcewell #010521-LTS-3	Playground equipment, equipment repairs, and replacement parts
Stryker Medical (formerly Physio-Control, Inc.)	$200,000	NASPO ValuePoint #OK-SW-300 Sourcewell #048123-STY	Lifepak automated external defibrillator (AED) devices
Tesco Controls, Inc.	$80,000	GSA Advantage #GS-07F-0513X	Traffic Signal Cabinets and Accessories
Tree Pro Tree Service Inc./Ross Tree Expert Company	$400,000	CMAS #4-09-03-0378A	Arborist services
Genuine Parts Company, dba NAPA Auto Parts	$150,000	Sourcewell #032521-GPC	Parts and supplies for fleet vehicles

Vendor	Not-to-Exceed Amount	Cooperative Purchase Agreement	Description
U.S Bancorp dba U.S Bank Corporate Payment Systems/Voyager Fleet Systems	$160,000	Sourcewell #080620-USB	Fleet Card Program for offsite fueling of fleet vehicles
Waxie Sanitary Supply/WAXIE's Enterprises, LLC	$75,000	NASPO ValuePoint #8506 CMAS #4-23-11-1017	Facilities and sanitary supplies
Total:	$5,115,000		

RESOLUTION NO. 2024-151

RESOLUTION OF THE CITY COUNCIL OF THE CITY OF ROCKLIN AUTHORIZING THE CITY MANAGER TO PURCHASE GOODS AND SERVICES THROUGH COOPERATIVE PURCHASE AGREEMENTS FOR FISCAL YEAR 2024/25

WHEREAS, the City of Rocklin has arrangements/memberships with a number of cooperative purchasing programs that allow member agencies to aggregate individual purchasing power and achieve greater volume discounts than what would be available as a stand- alone agency; and

WHEREAS, using this process, local government agencies can achieve better pricing and streamline purchases by removing repetitive, resource intensive, and costly bid procedures associated with routine purchases; and

WHEREAS, Rocklin Municipal Code Section 3.04.090 (C) and (D) allows for the City to enter into cooperative purchasing arrangements and piggyback contracts provided those contracts have been awarded through a competitive process by other agency within the past twelve months; for purchases in an amount more than fifty thousand dollars, the determination shall be made by the City Council; and

WHEREAS, staff reviewed historical citywide expenditures for vendors of goods and services associated with cooperative purchasing programs, and identified vendors with anticipated costs greater than $50,000 in Fiscal Year (FY) 2024/25 (Exhibit A); and

WHEREAS, in order to increase efficiency and streamline the purchasing process, staff is requesting Council approve and authorize the City Manager to purchase goods and supplies through cooperative purchase agreements, in an amount not to exceed $4,290,000 for FY2024/25; and

NOW, THEREFORE, the City Council of the City of Rocklin does resolve as follows:

Section 1. The above recital is true and correct.

Section 2. The City Council hereby approves and authorizes the City Manager to utilize cooperative purchase agreements to purchase goods and services through other government agency competitively bid contracts and their associated not to exceed amounts set forth in Exhibit "A," attached hereto.

PASSED AND ADOPTED this 25th day of June, 2024, by the following vote:

AYES:	Councilmembers: Bass, Broadway, Gayaldo, Halldin, Janda
NOES:	None
ABSENT:	None
ABSTAIN:	None

Greg Janda, Mayor

ATTEST:

Avinta Singh, City Clerk

Exhibit A

Cooperative Purchase Agreements by Vendor and Amount for FY 2024/25

Vendor:	Not-to-Exceed Amount	Cooperative Purchase Agreement	Description
Amazon Services, LLC	$150,000	OMNIA Partners #MA3457 OMNIA Partners #R-TC-17006	Office Supplies and general department supplies
American Office Products Distribution (AOPD)/Walker's Office Supplies	$150,000	OMNIA Partners #11-18	Office supplies and furniture, and general department supplies
AT&T Corp.	$160,000	CALNET NextGen – All Categories	Telecommunication services, including but not limited to FirstNet broadband network for first responders
AT&T DataComm	$250,000	CMAS #3-21-08-1074 CMAS #3-21-09-1015 CMAS #3-19-70-0255AL CMAS #3-17-70-0255AH CMAS #3-23-12-1014	Cellular service, business telephone lines, legacy radio circuts, analog copper-based services
AXON (formerly Taser International, Inc.)	$75,000	NASPO ValuePoint #OK-MA-145-015 Sourcewell #101223-AXN NASPO OKMA #145-21-100	Tasers and re-fill cartridges, drones and accessories, and evidence.com services
Caltronics Business Systems/Konica Minolta Business Solutions USA, Inc.	$55,000	CMAS #3-17-36-0037B	Copier service and supplies
Cellco Partnership dba Verizon Wireless	$60,000	NASPO ValuePoint #MA152-1 CMAS #3-21-09-1011	Cellular phone service, wireless data, voice, and accessories
CDW-G	$150,000	OMNIA Partners #23-6692-02 OMNIA Partners #R210401 OMNIA Partners #R220801 OMNIA Partners #MA3458 OMNIA Partners #2018011-01	Barracuda security solutions renewals and network switches and IT related equipment
Curtis Blue Line	$100,000	NPPGov #PS20275	Uniforms and bullet-proof vests
Dell Marketing LP	$75,000	NASPO ValuePoint #AR2495 NASPO ValuePoint #7-23-70-55-01	IT Equipment, including but not limited to various IT licenses, desktop & monitor purchases, etc
General Motors/Future Chevrolet of Sacramento	$100,000	Sourcewell #101520-GNL	Parts and supplies for fleet vehicles
Goodyear/The Goodyear Tire & Rubber Company	$90,000	Sourcewell #102517-GTC NASPO ValuePoint #19101	Tires
Herc Rentals Inc.	$110,000	OMNIA Partners #2019000318 CMAS #4-24-05-1052	Construction equipment rentals

Honeywell International, Inc/US Digital Designs, Inc.	$125,000	NPPGov #PS20350	Fire station alerting system, components (parts) and warranty
Hunt & Sons, Inc.	$425,000	SACOG #1920029	Fuel
Lenslock, Inc.	$150,000	NPPGov #PS22120	Body-worn camera, in-car video, surveillance and network services, digital evidence management services
Life Assist, Inc.	$75,000	NPPGov #PS20180	EMS medical supplies and equipment
LION (Authorized Dealer/Distributor Allstar Fire Equipment)	$100,000	NPPGov #PS20065	Uniforms, PPE, equipment, turnout gear, hoses
L.N Curtis & Sons	$100,000	NPPGov #PS20015 NPPGov #PS20105 SCBA H-GAC #EE08-19	Turnout gear, PPE, and equipment
Motorola Solutions, Inc.	$500,000	NASPO ValuePoint #00318 H-GAC #EC07-20 9-1-1	Handheld and in-vehicle radios for public safety departments
Oshkosh Corporation/Pierce Manufacturing Inc./Golden State Fire Apparatus, Inc.	$100,000	Sourewell #113021-OKC-1	Vehicle and equipment parts
PlayPower, Inc. - Miracle Recreation/Miracle PlaySystems, Inc.	$125,000	Sourcewell #010521-LTS-3	Playground equipment, equipment repairs, and replacement parts
Stryker Medical (formerly Physio-Control, Inc.)	$200,000	NASPO ValuePoint #OK-SW-300 Sourcewell #048123-STY	Lifepak automated external defibrillator (AED) devices
Tesco Controls, Inc.	$80,000	GSA Advantage #GS-07F-0513X	Traffic Signal Cabinets and Accessories
Tree Pro Tree Service Inc./Ross Tree Expert Company	$400,000	CMAS #4-09-03-0378A	Arborist services
Genuine Parts Company, dba NAPA Auto Parts	$150,000	Sourcewell #032521-GPC	Parts and supplies for fleet vehicles
U.S Bancorp dba U.S Bank Corporate Payment Systems/Voyager Fleet Systems	$160,000	Sourcewell #080620-USB	Fleet Card Program for offsite fueling of fleet vehicles
Waxie Sanitary Supply/WAXIE's Enterprises, LLC	$75,000	NASPO ValuePoint #8506 CMAS #4-23-11-1017	Facilities and sanitary supplies
Total:	$4,290,000		

RESOLUTION NO. 2024-224

RESOLUTION OF THE CITY COUNCIL OF THE CITY OF ROCKLIN TO AUTHORIZE THE PURCHASE OF GOODS AND SERVICES WITH HUNT & SONS, INC., UNDER SACRAMENTO AREA COUNCIL OF GOVERNMENTS AGREEMENT #CT250003 (Lubricants)

WHEREAS, on June 25, 2024, the City Council adopted Resolution No. 2024-151, authorizing the purchase of various goods and services through cooperative purchase agreements under Rocklin Municipal Code sections
3.04.090 (C) and (D); and

WHEREAS, the Resolution authorized the use of Sacramento Area Council of Governments (SACOG) Agreement #1920029, to purchase both lubricants and fuel from Hunt & Sons, Inc. for a combined not to exceed amount of $425,000; and

WHEREAS, the SACOG Agreement #1920029 expired on September 1, 2024 and was replaced effective August 16, 2024, with two contracts one for lubricants and one for fuel; and

WHEREAS, the not to exceed amount for each agreement must be determined while staying with the previously approved not to exceed amount of $425,000; and

WHEREAS, in reviewing the various costs it was determined that the not to exceed amount for Lubricants is $15,000; and

WHEREAS, there is no fiscal impact as funds were included in the FY 2024/25 budget for these goods.

NOW, THEREFORE, BE IT RESOLVED by the City Council of the City of Rocklin as follows:

Section 1. The City Council approves and authorizes the City Manager to utilize this cooperative purchase agreement to purchase goods and services with Hunt & Sons, Inc. through Sacramento Area Council of Governments, Agreement and #CT250003 (Lubricants) with a not to exceed amount of $15,000.

Section 2. The City Council hereby approves and authorizes the City Manager to execute this agreement with Hunt & Sons, Inc. in substantially the form attached hereto as Exhibit A.

PASSED AND ADOPTED this 8th day of October, 2024, by the following vote:

AYES: Councilmembers: Bass, Broadway, Gayaldo, Halldin, Janda

NOES: None

ABSENT: None

ABSTAIN: None

Greg Janda, Mayor

ATTEST:

Avinta Singh, City Clerk

Exhibit A

FORM OF PARTICIPATING AGENCY SUB AGREEMENT

JOINT LUBRICANT PROCUREMENT
SUB-AGREEMENT
between
CONTRACTOR and PARTICIPATING AGENCY

This FUEL PROCUREMENT AGREEMENT ("Agreement"), is made and entered into on September 24, 2024 by and between the City of Rocklin, a Municipal Corporation (hereinafter "Participating Agency"), and **HUNT & SONS, INC.**, a California corporation (hereinafter "Contractor or "Consultant").

RECITALS:

A. The Sacramento Area Council of Governments ("SACOG") has entered into a Standard Agreement with the Contractor, dated August 16, 2024, to provide various forms of lubricant and propane products to certain participating SACOG member agencies and other eligible entities (the "SACOG Agreement"); and

B. The Participating Agency desires to purchase lubricant and propane products from Contractor pursuant to the terms and conditions set forth below.

AGREEMENT:

NOW, THEREFORE, the parties agree as follows:

1. The provisions of the SACOG Agreement are incorporated into this Agreement as though set forth in full herein. Except as otherwise expressly set forth herein, the terms and conditions of the SACOG Agreement are made applicable to the Contractor's provision of services to the Participating Agency.

2. Contractor shall perform the scope of work attached to this Agreement as Exhibit A and incorporated herein. The estimated fuel requirements set forth on Exhibit A are estimates only and do not bind the Participating Agency to purchase that amount of fuel products.

3. The Participating Agency shall pay the Contractor in arrears for fuel delivered in accordance with the rate schedule set forth in Exhibit A. Payments shall be made pursuant to the payment provisions set forth in the SACOG Agreement.

4. Insurance Requirements.

   a. Contractor shall obtain and maintain the insurance required under section 15 of the SACOG Agreement and shall cause the Participating Agency to be named as additional insured thereunder.

5. The Participating Agency shall have the right to terminate this Agreement for any reason, with or without cause, at any time, by giving the Contractor fifteen (15) days written notice. The notice shall be deemed served and effective for all purposes on the date it is deposited in the

U.S. mail, certified, return receipt requested to Contractor at the address set forth next to its signature, below.

6. Project Manager:

The Participating Agency's project manager for this Agreement is **Matt McClure** unless Participating Agency otherwise informs Contractor. Any notice, report, or other communication required by this agreement shall be mailed by first-class mail to the Participating Agency Project Manager at the following address:

Matt McClure, Public Works Manager
City of Rocklin
4081 Alvis Ct.
Rocklin, CA 95677
Telephone: 916-625-5500
Email: matt.mcclure@rocklin.ca.us

Contractor's project manager for this Agreement is **Josh Hunt.** No substitution of Contractor's project manager is permitted without the prior written agreement of Participating Agency, which agreement shall not be unreasonably withheld. Communication to Contractor required by this Agreement shall be mailed by first-class mail to:

Josh Hunt, CEO
Hunt & Sons, Inc.
5750 South Watt Avenue
Sacramento, CA 95829
Telephone: (916) 383-4868
Email: jhunt@huntnsons.com

(Signature Page to Follow)

IN WITNESS WHEREOF, THE PARTIES HAVE ENTERED INTO THIS AGREEMENT AS OF THE DATE HEREIN ABOVE APPEARING:

City of Rocklin:

_____

Aly Zimmermann
City Manager

HUNT & SONS, INC.

_____

JOSHUA HUNT
Chief Executive Officer

RESOLUTION NO. 2024-225

RESOLUTION OF THE CITY COUNCIL OF THE CITY OF ROCKLIN TO AUTHORIZE THE PURCHASE OF GOODS AND SERVICES WITH HUNT & SONS, INC. UNDER SACRAMENTO AREA COUNCIL OF GOVERNMENTS AGREEMENT #CT250004 (Fuel)

WHEREAS, on June 25, 2024, the City Council adopted Resolution No. 2024-151, authorizing the purchase of various goods and services through cooperative purchase agreements under Rocklin Municipal Code sections 3.04.090 (C) and (D); and

WHEREAS, the Resolution authorized the use of Sacramento Area Council of Governments (SACOG) Agreement #1920029, to purchase both lubricants and fuel from Hunt & Sons, Inc. for a combined not to exceed amount of $425,000; and

WHEREAS, the SACOG Agreement #1920029 expired on September 1, 2024 and was replaced effective August 16, 2024 with two contracts one for lubricants and one for fuel; and

WHEREAS, the not to exceed amount for each agreement must be determined while staying with the previously approved not to exceed amount of $425,000; and

WHEREAS, in reviewing the various costs it was determined that the not to exceed amount for Fuel is $410,000; and

WHEREAS, there is no fiscal impact as funds were included in the FY 2024/25 budget for these goods

NOW, THEREFORE, BE IT RESOLVED by the City Council of the City of Rocklin as follows:

Section 1. The City Council approves and authorizes the City Manager to utilize this cooperative purchase agreement to purchase goods and services with Hunt & Sons, Inc. through Sacramento Area Council of Governments, Agreement and #CT250004 (Fuel) with a not to exceed amount of $410,000.

Section 2. The City Council hereby approves and authorizes the City Manager to execute agreements with Hunt & Sons, Inc. in substantially the form attached hereto as Exhibit A.

PASSED AND ADOPTED this 8th day of October, 2024, by the following vote:

AYES: Councilmembers: Bass, Broadway, Gayaldo, Halldin

NOES: None

ABSENT: None

ABSTAIN: None

Greg Janda, Mayor

ATTEST:

Avinta Singh, City Clerk

Docusign Envelope ID: 0379E791-11FA-4B9C-8F8D-4BD215EC8940

FORM OF PARTICIPATING AGENCY SUB AGREEMENT

JOINT FUEL PROCUREMENT
SUB-AGREEMENT
between
CONTRACTOR and PARTICIPATING AGENCY

This FUEL PROCUREMENT AGREEMENT ("Agreement"), is made and entered into on September 24, 2024, by and between **City of Rocklin**, a Municipal Corporation (hereinafter "Participating Agency"), and **HUNT & SONS LLC**, a Delaware limited liability company (hereinafter "Contractor or "Consultant").

RECITALS:

A. The Sacramento Area Council of Governments ("SACOG") has entered into a Standard Agreement with the Contractor, dated August 23, 2024, to provide various forms of fuel products to certain participating SACOG member agencies and other eligible entities (the "SACOG Agreement"); and

B. The Participating Agency desires to purchase fuel products from Contractor pursuant to the terms and conditions set forth below.

AGREEMENT:

NOW, THEREFORE, the parties agree as follows:

1. The provisions of the SACOG Agreement are incorporated into this Agreement as though set forth in full herein. Except as otherwise expressly set forth herein, the terms and conditions of the SACOG Agreement are made applicable to the Contractor's provision of services to the Participating Agency.

2. Contractor shall perform the scope of work attached to this Agreement as Exhibit A and incorporated herein. The estimated fuel requirements set forth on Exhibit A are estimates only and do not bind the Participating Agency to purchase that amount of fuel products.

3. The Participating Agency shall pay the Contractor in arrears for fuel delivered in accordance with the rate schedule set forth in Exhibit A. Payments shall be made pursuant to the payment provisions set forth in the SACOG Agreement.

4. Insurance Requirements.

   a. Contractor shall obtain and maintain the insurance required under section 15 of the SACOG Agreement and shall cause the Participating Agency to be named as additional insured thereunder.

5. The Participating Agency shall have the right to terminate this Agreement for any reason, with or without cause, at any time, by giving the Contractor fifteen (15) days written notice. The notice shall be deemed served and effective for all purposes on the date

Docusign Envelope ID: 0379E791-11FA-4B9C-8F8D-4BD215EC8940

it is deposited in the U.S. mail, certified, return receipt requested to Contractor at the address set forth next to its signature, below.

6. Project Manager:

The Participating Agency's project manager for this Agreement is **Matt McClure** unless Participating Agency otherwise informs Contractor. Any notice, report, or other communication required by this agreement shall be mailed by first-class mail to the Participating Agency Project Manager at the following address:

Matt McClure, Public Works Manager
City of Rocklin
4081 Alvis Ct.
Rocklin, CA 95677
Telephone: 916-625-5500
Email: matt.mcclure@rocklin.ca.us

Contractor's project manager for this Agreement is **Brad McGhee.** No substitution of Contractor's project manager is permitted without the prior written agreement of Participating Agency, which agreement shall not be unreasonably withheld. Communication to Contractor required by this Agreement shall be mailed by first-class mail to:

Brad McGhee, Sales Manager
Hunt & Sons LLC
5725 Alder Avenue
Sacramento, CA 95829
Telephone: (209) 345-8062
Email: bmcghee@huntnsonsllc.com

(*Signature Page to Follow)*

IN WITNESS WHEREOF, THE PARTIES HAVE ENTERED INTO THIS AGREEMENT AS OF THE DATE HEREIN ABOVE APPEARING:

City of Rocklin:

DocuSigned by:

Aly Zimmermann

F20E0740AAD0403...

Aly Zimmermann
City Manager

HUNT & SONS LLC

Signed by:

Brad McGhee

0F9E107407EE448...

BRAD MCGHEE
Sales Manager

RESOLUTION NO. 2024-235

RESOLUTION OF THE CITY COUNCIL OF THE CITY OF ROCKLIN AUTHORIZING THE CITY MANAGER TO INCREASE THE PURCHASING AUTHORIZATION AMOUNT WITH CDW-G FOR VARIOUS IT PURCHASES THROUGH COOPERATIVE PURCHASE AGREEMENTS FOR FISCAL YEAR 2024/25

WHEREAS, on June 25, 2024, the City Council adopted Resolution No. 2024-151, authorizing the purchase of various goods and services through cooperative purchase agreements under Rocklin Municipal Code sections 3.04.090 (C) and (D); and

WHEREAS, the Resolution authorized the use of various cooperative agreements for CDW-G up to $150,000; and

WHEREAS, additional IT purchases needed for on-going Citywide operations for Fiscal Year (FY) 2024/25 have been identified and can be purchased under the existing cooperative purchase agreements; and

WHEREAS, staff recommends an increase in the total not-to-exceed amount by $150,000 with CDW-G under the cooperative purchasing agreements listed in Exhibit A, bringing the new total to $300,000; and

WHEREAS, the costs of this increase are included in the Fiscal Year (FY 2024/25) Operating Budget.

NOW, THEREFORE, BE IT RESOLVED by the City Council of the City of Rocklin as follows:

Section 1. The City Manager may execute one or more contracts, including amendments, and including retroactive contracts or amendments, to purchase goods, services, or both within the scope of the description set forth in Exhibit A or as otherwise provided by the Cooperative Purchase Agreements, from CDW-G through the Cooperative Purchasing Agreements listed in Exhibit A, provided that the City Attorney approves each such contract or amendment as to form and further provided that the total contract not-to-exceed amount of all such contracts shall not exceed $300,000.

PASSED AND ADOPTED this 22nd day of October, 2024, by the following vote:

AYES:	Councilmembers: Bass, Broadway, Gayaldo, Halldin
NOES:	None
ABSENT:	Mayor Janda
ABSTAIN:	None

Joe Gayaldo for

Greg Janda, Mayor

ATTEST:

Avinta Singh, City Clerk

Exhibit A

CDW-G Cooperative Purchase Agreements for FY 2024/25

Vendor Name	Not-to-Exceed -Amount	Cooperative Purchase Agreement	Description
CDW-G	$300,000	OMNIA Partners #23-6692-02 OMNIA Partners #R210401 OMNIA Partners #R220801 OMNIA Partners #MA3458 OMNIA Partners #2018011-01	Barracuda security solutions renewals and network switches and IT related equipment

RESOLUTION NO. 2024-236

RESOLUTION OF THE CITY COUNCIL OF THE CITY OF ROCKLIN AUTHORIZING THE CITY MANAGER TO INCREASE THE PURCHASING AUTHORIZATION AMOUNT WITH DELL MARKETING LP FOR VARIOUS IT PURCHASES THROUGH COOPERATIVE PURCHASE AGREEMENTS FOR FISCAL YEAR 2024/25

WHEREAS, on June 25, 2024, the City Council adopted Resolution No. 2024-151, authorizing the purchase of various goods and services through cooperative purchase agreements under Rocklin Municipal Code sections 3.04.090 (C) and (D); and

WHEREAS, the Resolution authorized the use of various cooperative agreements for Dell Marketing LP up to $75,000; and

WHEREAS, additional IT purchases needed for on-going Citywide operations for Fiscal Year (FY) 2024/25 have been identified and can be purchased under the existing cooperative purchase agreements; and

WHEREAS, staff recommends an increase in the total not-to-exceed amount by $50,000 with Dell Marketing LP under the cooperative purchasing agreements listed in Exhibit A, bringing the new total to $125,000; and

WHEREAS, the costs of this increase are included in the Fiscal Year (FY 2024/25) Operating Budget.

NOW, THEREFORE, BE IT RESOLVED by the City Council of the City of Rocklin as follows:

Section 1. The City Manager may execute one or more contracts, including amendments, and including retroactive contracts or amendments, to purchase goods, services, or both within the scope of the description set forth in Exhibit A or as otherwise provided by the Cooperative Purchase Agreements, from Dell Marketing LP through the Cooperative Purchasing Agreements listed in Exhibit A, provided that the City Attorney approves each such contract or amendment as to form and further provided that the total contract not-to-exceed amount of all such contracts shall not exceed $125,000.

PASSED AND ADOPTED this 22nd day of October, 2024, by the following vote:

AYES: Councilmembers: Bass, Broadway, Gayaldo, Halldin
NOES: None
ABSENT: Mayor Janda
ABSTAIN: None

Joe Gayaldo for
Greg Janda, Mayor

ATTEST:

Avinta Singh, City Clerk

Exhibit A

Dell Marketing LP Cooperative Purchase Agreements for FY 2024/25

Vendor Name	Not-to-Exceed - Amount	Cooperative Purchase Agreement	Description
Dell Marketing LP	$125,000	NASPO ValuePoint #AR2495 NASPO ValuePoint #7-23-70-55-01	IT Equipment, including but not limited to various IT licenses, desktop & monitor purchases, etc.

DocuSign Envelope ID: F416D837-E545-4A9D-8F62-28D5E4268B24

Sourcewell

Solicitation Number: RFP #010521

CONTRACT

This Contract is between Sourcewell, 202 12th Street Northeast, P.O. Box 219, Staples, MN 56479 (Sourcewell) and PlayPower, Inc., 11515 Vanstory Drive #100, Huntersville, NC 28078 (Vendor).

Sourcewell is a State of Minnesota local government agency and service cooperative created under the laws of the State of Minnesota (Minnesota Statutes Section 123A.21) that offers cooperative procurement solutions to government entities. Participation is open to federal, state/province, and municipal governmental entities, higher education, K-12 education, nonprofit, tribal government, and other public entities located in the United States and Canada. Sourcewell issued a public solicitation for Playground and Water Play Equipment with Related Accessories and Services from which Vendor was awarded a contract.

Vendor desires to contract with Sourcewell to provide equipment, products, or services to Sourcewell and the entities that access Sourcewell's cooperative purchasing contracts (Participating Entities).

1. TERM OF CONTRACT

A. EFFECTIVE DATE. This Contract is effective upon the date of the final signature below.

B. EXPIRATION DATE AND EXTENSION. This Contract expires February 17, 2025, unless it is cancelled sooner pursuant to Article 22. This Contract may be extended up to one additional one-year period upon request of Sourcewell and with written agreement by Vendor.

C. SURVIVAL OF TERMS. Articles 11 through 14 survive the expiration or cancellation of this Contract.

2. EQUIPMENT, PRODUCTS, OR SERVICES

A. EQUIPMENT, PRODUCTS, OR SERVICES. Vendor will provide the Equipment, Products, or Services as stated in its Proposal submitted under the Solicitation Number listed above. Vendor's Equipment, Products, or Services Proposal (Proposal) is attached and incorporated into this Contract.

DocuSign Envelope ID: F416D837-E545-4A9D-8F62-28D5E4268B24

All Equipment and Products provided under this Contract must be new/current model. Vendor may offer close-out or refurbished Equipment or Products if they are clearly indicated in Vendor's product and pricing list. Unless agreed to by the Participating Entities in advance, Equipment or Products must be delivered as operational to the Participating Entity's site.

This Contract offers an indefinite quantity of sales, and while substantial volume is anticipated, sales and sales volume are not guaranteed.

B. WARRANTY. Vendor warrants that all Equipment, Products, and Services furnished are free from liens and encumbrances, and are free from defects in design, materials, and workmanship. In addition, Vendor warrants the Equipment, Products, and Services are suitable for and will perform in accordance with the ordinary use for which they are intended. Vendor's dealers and distributors must agree to assist the Participating Entity in reaching a resolution in any dispute over warranty terms with the manufacturer. Any manufacturer's warranty that is effective past the expiration of the Vendor's warranty will be passed on to the Participating Entity.

C. DEALERS, DISTRIBUTORS, AND/OR RESELLERS. Upon Contract execution, Vendor will make available to Sourcewell a means to validate or authenticate Vendor's authorized dealers, distributors, and/or resellers relative to the Equipment, Products, and Services related to this Contract. This list may be updated from time-to-time and is incorporated into this Contract by reference. It is the Vendor's responsibility to ensure Sourcewell receives the most current version of this list.

3. PRICING

All Equipment, Products, or Services under this Contract will be priced as stated in Vendor's Proposal.

When providing pricing quotes to Participating Entities, all pricing quoted must reflect a Participating Entity's total cost of acquisition. This means that the quoted cost is for delivered Equipment, Products, and Services that are operational for their intended purpose, and includes all costs to the Participating Entity's requested delivery location.

Regardless of the payment method chosen by the Participating Entity, the total cost associated with any purchase option of the Equipment, Products, or Services must always be disclosed in the pricing quote to the applicable Participating Entity at the time of purchase.

A. SHIPPING AND SHIPPING COSTS. All delivered Equipment and Products must be properly packaged. Damaged Equipment and Products may be rejected. If the damage is not readily apparent at the time of delivery, Vendor must permit the Equipment and Products to be returned within a reasonable time at no cost to Sourcewell or its Participating Entities. Participating Entities reserve the right to inspect the Equipment and Products at a reasonable

DocuSign Envelope ID: F416D837-E545-4A9D-8F62-28D5E4268B24

time after delivery where circumstances or conditions prevent effective inspection of the Equipment and Products at the time of delivery.

Vendor must arrange for and pay for the return shipment on Equipment and Products that arrive in a defective or inoperable condition.

Sourcewell may declare the Vendor in breach of this Contract if the Vendor intentionally delivers substandard or inferior Equipment or Products. In the event of the delivery of nonconforming Equipment and Products, the Participating Entity will notify the Vendor as soon as possible and the Vendor will replace nonconforming Equipment and Products with conforming Equipment and Products that are acceptable to the Participating Entity.

B. SALES TAX. Each Participating Entity is responsible for supplying the Vendor with valid tax-exemption certification(s). When ordering, a Participating Entity must indicate if it is a tax-exempt entity.

C. HOT LIST PRICING. At any time during this Contract, Vendor may offer a specific selection of Equipment, Products, or Services at discounts greater than those listed in the Contract. When Vendor determines it will offer Hot List Pricing, it must be submitted electronically to Sourcewell in a line-item format. Equipment, Products, or Services may be added or removed from the Hot List at any time through a Sourcewell Price and Product Change Form as defined in Article 4 below.

Hot List program and pricing may also be used to discount and liquidate close-out and discontinued Equipment and Products as long as those close-out and discontinued items are clearly identified as such. Current ordering process and administrative fees apply. Hot List Pricing must be published and made available to all Participating Entities.

4. PRODUCT AND PRICING CHANGE REQUESTS

Vendor may request Equipment, Product, or Service changes, additions, or deletions at any time. All requests must be made in writing by submitting a signed Sourcewell Price and Product Change Request Form to the assigned Sourcewell Contract Administrator. This form is available from the assigned Sourcewell Contract Administrator. At a minimum, the request must:

- Identify the applicable Sourcewell contract number;
- Clearly specify the requested change;
- Provide sufficient detail to justify the requested change;
- Individually list all Equipment, Products, or Services affected by the requested change, along with the requested change (e.g., addition, deletion, price change); and
- Include a complete restatement of pricing documentation in Microsoft Excel with the effective date of the modified pricing, or product addition or deletion. The new pricing

DocuSign Envelope ID: F416D837-E545-4A9D-8F62-28D5E4268B24

restatement must include all Equipment, Products, and Services offered, even for those items where pricing remains unchanged.

A fully executed Sourcewell Price and Product Request Form will become an amendment to this Contract and be incorporated by reference.

5. PARTICIPATION, CONTRACT ACCESS, AND PARTICIPATING ENTITY REQUIREMENTS

A. PARTICIPATION. Sourcewell's cooperative contracts are available and open to public and nonprofit entities across the United States and Canada; such as federal, state/province, municipal, K-12 and higher education, tribal government, and other public entities.

The benefits of this Contract should be available to all Participating Entities that can legally access the Equipment, Products, or Services under this Contract. A Participating Entity's authority to access this Contract is determined through its cooperative purchasing, interlocal, or joint powers laws. Any entity accessing benefits of this Contract will be considered a Service Member of Sourcewell during such time of access. Vendor understands that a Participating Entity's use of this Contract is at the Participating Entity's sole convenience and Participating Entities reserve the right to obtain like Equipment, Products, or Services from any other source.

Vendor is responsible for familiarizing its sales and service forces with Sourcewell contract use eligibility requirements and documentation and will encourage potential participating entities to join Sourcewell. Sourcewell reserves the right to add and remove Participating Entities to its roster during the term of this Contract.

B. PUBLIC FACILITIES. Vendor's employees may be required to perform work at government-owned facilities, including schools. Vendor's employees and agents must conduct themselves in a professional manner while on the premises, and in accordance with Participating Entity policies and procedures, and all applicable laws.

6. PARTICIPATING ENTITY USE AND PURCHASING

A. ORDERS AND PAYMENT. To access the contracted Equipment, Products, or Services under this Contract, a Participating Entity must clearly indicate to Vendor that it intends to access this Contract; however, order flow and procedure will be developed jointly between Sourcewell and Vendor. Typically, a Participating Entity will issue an order directly to Vendor. If a Participating Entity issues a purchase order, it may use its own forms, but the purchase order should clearly note the applicable Sourcewell contract number. All Participating Entity orders under this Contract must be issued prior to expiration of this Contract; however, Vendor performance, Participating Entity payment, and any applicable warranty periods or other Vendor or Participating Entity obligations may extend beyond the term of this Contract.

DocuSign Envelope ID: F416D837-E545-4A9D-8F62-28D5E4268B24

Vendor's acceptable forms of payment are included in Attachment A. Participating Entities will be solely responsible for payment and Sourcewell will have no liability for any unpaid invoice of any Participating Entity.

B. ADDITIONAL TERMS AND CONDITIONS/PARTICIPATING ADDENDUM. Additional terms and conditions to a purchase order, or other required transaction documentation, may be negotiated between a Participating Entity and Vendor, such as job or industry-specific requirements, legal requirements (e.g., affirmative action or immigration status requirements), or specific local policy requirements. Some Participating Entitles may require the use of a Participating Addendum; the terms of which will be worked out directly between the Participating Entity and the Vendor. Any negotiated additional terms and conditions must never be less favorable to the Participating Entity than what is contained in this Contract.

C. SPECIALIZED SERVICE REQUIREMENTS. In the event that the Participating Entity requires service or specialized performance requirements (such as e-commerce specifications, specialized delivery requirements, or other specifications and requirements) not addressed in this Contract, the Participating Entity and the Vendor may enter into a separate, standalone agreement, apart from this Contract. Sourcewell, including its agents and employees, will not be made a party to a claim for breach of such agreement.

D. TERMINATION OF ORDERS. Participating Entities may terminate an order, in whole or in part, immediately upon notice to Vendor in the event of any of the following events:

1. The Participating Entity fails to receive funding or appropriation from its governing body at levels sufficient to pay for the goods to be purchased;
2. Federal, state, or provincial laws or regulations prohibit the purchase or change the Participating Entity's requirements; or
3. Vendor commits any material breach of this Contract or the additional terms agreed to between the Vendor and a Participating Entity.

E. GOVERNING LAW AND VENUE. The governing law and venue for any action related to a Participating Entity's order will be determined by the Participating Entity making the purchase.

7. CUSTOMER SERVICE

A. PRIMARY ACCOUNT REPRESENTATIVE. Vendor will assign an Account Representative to Sourcewell for this Contract and must provide prompt notice to Sourcewell if that person is changed. The Account Representative will be responsible for:

- Maintenance and management of this Contract;
- Timely response to all Sourcewell and Participating Entity inquiries; and
- Business reviews to Sourcewell and Participating Entities, if applicable.

DocuSign Envelope ID: F416D837-E545-4A9D-8F62-28D5E4268B24

B. BUSINESS REVIEWS. Vendor must perform a minimum of one business review with Sourcewell per contract year. The business review will cover sales to Participating Entities, pricing and contract terms, administrative fees, supply issues, customer issues, and any other necessary information.

8. REPORT ON CONTRACT SALES ACTIVITY AND ADMINISTRATIVE FEE PAYMENT

A. CONTRACT SALES ACTIVITY REPORT. Each calendar quarter, Vendor must provide a contract sales activity report (Report) to the Sourcewell Contract Administrator assigned to this Contract. A Report must be provided regardless of the number or amount of sales during that quarter (i.e., if there are no sales, Vendor must submit a report indicating no sales were made).

The Report must contain the following fields:

- Customer Name (e.g., City of Staples Highway Department);
- Customer Physical Street Address;
- Customer City;
- Customer State/Province;
- Customer Zip Code;
- Customer Contact Name;
- Customer Contact Email Address;
- Customer Contact Telephone Number;
- Sourcewell Assigned Entity/Participating Entity Number;
- Item Purchased Description;
- Item Purchased Price;
- Sourcewell Administrative Fee Applied; and
- Date Purchase was invoiced/sale was recognized as revenue by Vendor.

B. ADMINISTRATIVE FEE. In consideration for the support and services provided by Sourcewell, the Vendor will pay an administrative fee to Sourcewell on all Equipment, Products, and Services provided to Participating Entities. The Administrative Fee must be included in, and not added to, the pricing. Vendor may not charge Participating Entities more than the contracted price to offset the Administrative Fee.

The Vendor will submit payment to Sourcewell for the percentage of administrative fee stated in the Proposal multiplied by the total sales of all Equipment, Products, and Services purchased by Participating Entities under this Contract during each calendar quarter. Payments should note the Vendor's name and Sourcewell-assigned contract number in the memo; and must be mailed to the address above "Attn: Accounts Receivable" or remitted electronically to Sourcewell's banking institution per Sourcewell's Finance department instructions. Payments must be received no later than 45 calendar days after the end of each calendar quarter.

DocuSign Envelope ID: F416D837-E545-4A9D-8F62-28D5E4268B24

Vendor agrees to cooperate with Sourcewell in auditing transactions under this Contract to ensure that the administrative fee is paid on all items purchased under this Contract.

In the event the Vendor is delinquent in any undisputed administrative fees, Sourcewell reserves the right to cancel this Contract and reject any proposal submitted by the Vendor in any subsequent solicitation. In the event this Contract is cancelled by either party prior to the Contract's expiration date, the administrative fee payment will be due no more than 30 days from the cancellation date.

9. AUTHORIZED REPRESENTATIVE

Sourcewell's Authorized Representative is its Chief Procurement Officer.

Vendor's Authorized Representative is the person named in the Vendor's Proposal. If Vendor's Authorized Representative changes at any time during this Contract, Vendor must promptly notify Sourcewell in writing.

10. AUDIT, ASSIGNMENT, AMENDMENTS, WAIVER, AND CONTRACT COMPLETE

A. AUDIT. Pursuant to Minnesota Statutes Section 16C.05, subdivision 5, the books, records, documents, and accounting procedures and practices relevant this Agreement are subject to examination by Sourcewell or the Minnesota State Auditor for a minimum of six years from the end of this Contract. This clause extends to Participating Entities as it relates to business conducted by that Participating Entity under this Contract.

B. ASSIGNMENT. Neither the Vendor nor Sourcewell may assign or transfer any rights or obligations under this Contract without the prior consent of the parties and a fully executed assignment agreement. Such consent will not be unreasonably withheld.

C. AMENDMENTS. Any amendment to this Contract must be in writing and will not be effective until it has been fully executed by the parties.

D. WAIVER. If either party fails to enforce any provision of this Contract, that failure does not waive the provision or the right to enforce it.

E. CONTRACT COMPLETE. This Contract contains all negotiations and agreements between Sourcewell and Vendor. No other understanding regarding this Contract, whether written or oral, may be used to bind either party. For any conflict between the attached Proposal and the terms set out in Articles 1-22, the terms of Articles 1-22 will govern.

F. RELATIONSHIP OF THE PARTIES. The relationship of the parties is one of independent contractors, each free to exercise judgment and discretion with regard to the conduct of their

DocuSign Envelope ID: F416D837-E545-4A9D-8F62-28D5E4268B24

respective businesses. This Contract does not create a partnership, joint venture, or any other relationship such as master-servant, or principal-agent.

11. LIABILITY

Vendor must indemnify, save, and hold Sourcewell and its Participating Entities, including their agents and employees, harmless from any claims or causes of action, including attorneys' fees, arising out of the performance of this Contract by the Vendor or its agents or employees; this indemnification includes injury or death to person(s) or property alleged to have been caused by some defect in the Equipment, Products, or Services under this Contract to the extent the Equipment, Product, or Service has been used according to its specifications.

12. GOVERNMENT DATA PRACTICES

Vendor and Sourcewell must comply with the Minnesota Government Data Practices Act, Minnesota Statutes Chapter 13, as it applies to all data provided by or provided to Sourcewell under this Contract and as it applies to all data created, collected, received, stored, used, maintained, or disseminated by the Vendor under this Contract.

If the Vendor receives a request to release the data referred to in this article, the Vendor must immediately notify Sourcewell and Sourcewell will assist with how the Vendor should respond to the request.

13. INTELLECTUAL PROPERTY, PUBLICITY, MARKETING, AND ENDORSEMENT

A. INTELLECTUAL PROPERTY

1. *Grant of License.* During the term of this Contract:
   a. Sourcewell grants to Vendor a royalty-free, worldwide, non-exclusive right and license to use theTrademark(s) provided to Vendor by Sourcewell in advertising and promotional materials for the purpose of marketing Sourcewell's relationship with Vendor.
   b. Vendor grants to Sourcewell a royalty-free, worldwide, non-exclusive right and license to use Vendor's Trademarks in advertising and promotional materials for the purpose of marketing Vendor's relationship with Sourcewell.
2. *Limited Right of Sublicense*. The right and license granted herein includes a limited right of each party to grant sublicenses to its and their respective distributors, marketing representatives, and agents (collectively "Permitted Sublicensees") in advertising and promotional materials for the purpose of marketing the Parties' relationship to Participating Entities. Any sublicense granted will be subject to the terms and conditions of this Article. Each party will be responsible for any breach of this Article by any of their respective sublicensees.
3. *Use; Quality Control.*

DocuSign Envelope ID: F416D837-E545-4A9D-8F62-28D5E4268B24

a. Sourcewell must not alter Vendor's Trademarks from the form provided by Vendor and must comply with Vendor's removal requests as to specific uses of its trademarks or logos.

b. Vendor must not alter Sourcewell's Trademarks from the form provided by Sourcewell and must comply with Sourcewell's removal requests as to specific uses of its trademarks or logos.

c. Each party agrees to use, and to cause its Permitted Sublicensees to use, the other party's Trademarks only in good faith and in a dignified manner consistent with such party's use of the Trademarks. Upon written notice to the breaching party, the breaching party has 30 days of the date of the written notice to cure the breach or the license will be terminated.

4. As applicable, Vendor agrees to indemnify and hold harmless Sourcewell and its Participating Entities against any and all suits, claims, judgments, and costs instituted or recovered against Sourcewell or Participating Entities by any person on account of the use of any Equipment or Products by Sourcewell or its Participating Entities supplied by Vendor in violation of applicable patent or copyright laws.

5. Termination. Upon the termination of this Contract for any reason, each party, including Permitted Sublicensees, will have 30 days to remove all Trademarks from signage, websites, and the like bearing the other party's name or logo (excepting Sourcewell's pre-printed catalog of vendors which may be used until the next printing). Vendor must return all marketing and promotional materials, including signage, provided by Sourcewell, or dispose of it according to Sourcewell's written directions.

B. PUBLICITY. Any publicity regarding the subject matter of this Contract must not be released without prior written approval from the Authorized Representatives. Publicity includes notices, informational pamphlets, press releases, research, reports, signs, and similar public notices prepared by or for the Vendor individually or jointly with others, or any subcontractors, with respect to the program, publications, or services provided resulting from this Contract.

C. MARKETING. Any direct advertising, marketing, or offers with Participating Entities must be approved by Sourcewell. Materials should be sent to the Sourcewell Contract Administrator assigned to this Contract.

D. ENDORSEMENT. The Vendor must not claim that Sourcewell endorses its Equipment, Products, or Services.

14. GOVERNING LAW, JURISDICTION, AND VENUE

Minnesota law governs this Contract. Venue for all legal proceedings out of this Contract, or its breach, must be in the appropriate state court in Todd County or federal court in Fergus Falls, Minnesota.

DocuSign Envelope ID: F416D837-E545-4A9D-8F62-28D5E4268B24

15. FORCE MAJEURE

Neither party to this Contract will be held responsible for delay or default caused by acts of God or other conditions that are beyond that party's reasonable control. A party defaulting under this provision must provide the other party prompt written notice of the default.

16. SEVERABILITY

If any provision of this Contract is found to be illegal, unenforceable, or void then both Sourcewell and Vendor will be relieved of all obligations arising under such provisions. If the remainder of this Contract is capable of performance, it will not be affected by such declaration or finding and must be fully performed.

17. PERFORMANCE, DEFAULT, AND REMEDIES

A. PERFORMANCE. During the term of this Contract, the parties will monitor performance and address unresolved contract issues as follows:

1. *Notification.* The parties must promptly notify each other of any known dispute and work in good faith to resolve such dispute within a reasonable period of time. If necessary, Sourcewell and the Vendor will jointly develop a short briefing document that describes the issue(s), relevant impact, and positions of both parties.
2. *Escalation.* If parties are unable to resolve the issue in a timely manner, as specified above, either Sourcewell or Vendor may escalate the resolution of the issue to a higher level of management. The Vendor will have 30 calendar days to cure an outstanding issue.
3. *Performance while Dispute is Pending*. Notwithstanding the existence of a dispute, the Vendor must continue without delay to carry out all of its responsibilities under the Contract that are not affected by the dispute. If the Vendor fails to continue without delay to perform its responsibilities under the Contract, in the accomplishment of all undisputed work, any additional costs incurred by Sourcewell and/or its Participating Entities as a result of such failure to proceed will be borne by the Vendor.

B. DEFAULT AND REMEDIES. Either of the following constitutes cause to declare this Contract, or any Participating Entity order under this Contract, in default:

1. Nonperformance of contractual requirements, or
2. A material breach of any term or condition of this Contract.

Written notice of default and a reasonable opportunity to cure must be issued by the party claiming default. Time allowed for cure will not diminish or eliminate any liability for liquidated or other damages. If the default remains after the opportunity for cure, the non-defaulting party may:

DocuSign Envelope ID: F416D837-E545-4A9D-8F62-28D5E4268B24

- Exercise any remedy provided by law or equity, or
- Terminate the Contract or any portion thereof, including any orders issued against the Contract.

18. INSURANCE

A. REQUIREMENTS. At its own expense, Vendor must maintain insurance policy(ies) in effect at all times during the performance of this Contract with insurance company(ies) licensed or authorized to do business in the State of Minnesota having an "AM BEST" rating of A- or better, with coverage and limits of insurance not less than the following:

1. *Workers' Compensation and Employer's Liability.*
Workers' Compensation: As required by any applicable law or regulation.
Employer's Liability Insurance: must be provided in amounts not less than listed below:
Minimum limits:
$500,000 each accident for bodily injury by accident
$500,000 policy limit for bodily injury by disease
$500,000 each employee for bodily injury by disease

2. *Commercial General Liability Insurance.* Vendor will maintain insurance covering its operations, with coverage on an occurrence basis, and must be subject to terms no less broad than the Insurance Services Office ("ISO") Commercial General Liability Form CG0001 (2001 or newer edition), or equivalent. At a minimum, coverage must include liability arising from premises, operations, bodily injury and property damage, independent contractors, products-completed operations including construction defect, contractual liability, blanket contractual liability, and personal injury and advertising injury. All required limits, terms and conditions of coverage must be maintained during the term of this Contract.
Minimum Limits:
$1,000,000 each occurrence Bodily Injury and Property Damage
$1,000,000 Personal and Advertising Injury
$2,000,000 aggregate for Products-Completed operations
$2,000,000 general aggregate

3. *Commercial Automobile Liability Insurance.* During the term of this Contract, Vendor will maintain insurance covering all owned, hired, and non-owned automobiles in limits of liability not less than indicated below. The coverage must be subject to terms no less broad than ISO Business Auto Coverage Form CA 0001 (2010 edition or newer), or equivalent.
Minimum Limits:
$1,000,000 each accident, combined single limit

DocuSign Envelope ID: F416D837-E545-4A9D-8F62-28D5E4268B24

4. *Umbrella Insurance*. During the term of this Contract, Vendor will maintain umbrella coverage over Workers' Compensation, Commercial General Liability, and Commercial Automobile.

Minimum Limits:
$2,000,000

5. *Professional/Technical, Errors and Omissions, and/or Miscellaneous Professional Liability*. During the term of this Contract, Vendor will maintain coverage for all claims the Vendor may become legally obligated to pay resulting from any actual or alleged negligent act, error, or omission related to Vendor's professional services required under this Contract.

Minimum Limits:
$2,000,000 per claim or event
$2,000,000 – annual aggregate

Failure of Vendor to maintain the required insurance will constitute a material breach entitling Sourcewell to immediately terminate this Contract for default.

B. CERTIFICATES OF INSURANCE. Prior to commencing under this Contract, Vendor must furnish to Sourcewell a certificate of insurance, as evidence of the insurance required under this Contract. Prior to expiration of the policy(ies), renewal certificates must be mailed to Sourcewell, 202 12th Street Northeast, P.O. Box 219, Staples, MN 56479 or sent to the Sourcewell Contract Administrator assigned to this Contract. The certificates must be signed by a person authorized by the insurer(s) to bind coverage on their behalf.

Failure to request certificates of insurance by Sourcewell, or failure of Vendor to provide certificates of insurance, in no way limits or relieves Vendor of its duties and responsibilities in this Contract.

C. ADDITIONAL INSURED ENDORSEMENT AND PRIMARY AND NON-CONTRIBUTORY INSURANCE CLAUSE. Vendor agrees to list Sourcewell and its Participating Entities, including their officers, agents, and employees, as an additional insured under the Vendor's commercial general liability insurance policy with respect to liability arising out of activities, "operations," or "work" performed by or on behalf of Vendor, and products and completed operations of Vendor. The policy provision(s) or endorsement(s) must further provide that coverage is primary and not excess over or contributory with any other valid, applicable, and collectible insurance or self-insurance in force for the additional insureds.

D. WAIVER OF SUBROGATION. Vendor waives and must require (by endorsement or otherwise) all its insurers to waive subrogation rights against Sourcewell and other additional insureds for losses paid under the insurance policies required by this Contract or other insurance applicable to the Vendor or its subcontractors. The waiver must apply to all deductibles and/or self-insured retentions applicable to the required or any other insurance

DocuSign Envelope ID: F416D837-E545-4A9D-8F62-28D5E4268B24

maintained by the Vendor or its subcontractors. Where permitted by law, Vendor must require similar written express waivers of subrogation and insurance clauses from each of its subcontractors.

E. UMBRELLA/EXCESS LIABILITY/SELF-INSURED RETENTION. The limits required by this Contract can be met by either providing a primary policy or in combination with umbrella/excess liability policy(ies), or self-insured retention.

19. COMPLIANCE

A. LAWS AND REGULATIONS. All Equipment, Products, or Services provided under this Contract must comply fully with applicable federal laws and regulations, and with the laws in the states and provinces in which the Equipment, Products, or Services are sold.

B. LICENSES. Vendor must maintain a valid and current status on all required federal, state/provincial, and local licenses, bonds, and permits required for the operation of the business that the Vendor conducts with Sourcewell and Participating Entities.

20. BANKRUPTCY, DEBARMENT, OR SUSPENSION CERTIFICATION

Vendor certifies and warrants that it is not in bankruptcy or that it has previously disclosed in writing certain information to Sourcewell related to bankruptcy actions. If at any time during this Contract Vendor declares bankruptcy, Vendor must immediately notify Sourcewell in writing.

Vendor certifies and warrants that neither it nor its principals are presently debarred, suspended, proposed for debarment, declared ineligible, or voluntarily excluded from programs operated by the State of Minnesota; the United States federal government or the Canadian government, as applicable; or any Participating Entity. Vendor certifies and warrants that neither it nor its principals have been convicted of a criminal offense related to the subject matter of this Contract. Vendor further warrants that it will provide immediate written notice to Sourcewell if this certification changes at any time.

21. PROVISIONS FOR NON-UNITED STATES FEDERAL ENTITY PROCUREMENTS UNDER UNITED STATES FEDERAL AWARDS OR OTHER AWARDS

Participating Entities that use United States federal grant or FEMA funds to purchase goods or services from this Contract may be subject to additional requirements including the procurement standards of the Uniform Administrative Requirements, Cost Principles and Audit Requirements for Federal Awards, 2 C.F.R. § 200. Participating Entities may also require additional requirements based on specific funding specifications. Within this Article, all references to “federal” should be interpreted to mean the United States federal government.

DocuSign Envelope ID: F416D837-E545-4A9D-8F62-28D5E4268B24

The following list only applies when a Participating Entity accesses Vendor's Equipment, Products, or Services with United States federal funds.

A. EQUAL EMPLOYMENT OPPORTUNITY. Except as otherwise provided under 41 C.F.R. § 60, all contracts that meet the definition of "federally assisted construction contract" in 41 C.F.R. § 60-1.3 must include the equal opportunity clause provided under 41 C.F.R. §60-1.4(b), in accordance with Executive Order 11246, "Equal Employment Opportunity" (30 FR 12319, 12935, 3 C.F.R. §, 1964-1965 Comp., p. 339), as amended by Executive Order 11375, "Amending Executive Order 11246 Relating to Equal Employment Opportunity," and implementing regulations at 41 C.F.R. § 60, "Office of Federal Contract Compliance Programs, Equal Employment Opportunity, Department of Labor." The equal opportunity clause is incorporated herein by reference.

B. DAVIS-BACON ACT, AS AMENDED (40 U.S.C. § 3141-3148). When required by federal program legislation, all prime construction contracts in excess of $2,000 awarded by non-federal entities must include a provision for compliance with the Davis-Bacon Act (40 U.S.C. § 3141-3144, and 3146-3148) as supplemented by Department of Labor regulations (29 C.F.R. § 5, "Labor Standards Provisions Applicable to Contracts Covering Federally Financed and Assisted Construction"). In accordance with the statute, contractors must be required to pay wages to laborers and mechanics at a rate not less than the prevailing wages specified in a wage determination made by the Secretary of Labor. In addition, contractors must be required to pay wages not less than once a week. The non-federal entity must place a copy of the current prevailing wage determination issued by the Department of Labor in each solicitation. The decision to award a contract or subcontract must be conditioned upon the acceptance of the wage determination. The non-federal entity must report all suspected or reported violations to the federal awarding agency. The contracts must also include a provision for compliance with the Copeland "Anti-Kickback" Act (40 U.S.C. § 3145), as supplemented by Department of Labor regulations (29 C.F.R. § 3, "Contractors and Subcontractors on Public Building or Public Work Financed in Whole or in Part by Loans or Grants from the United States"). The Act provides that each contractor or subrecipient must be prohibited from inducing, by any means, any person employed in the construction, completion, or repair of public work, to give up any part of the compensation to which he or she is otherwise entitled. The non-federal entity must report all suspected or reported violations to the federal awarding agency. Vendor must be in compliance with all applicable Davis-Bacon Act provisions.

C. CONTRACT WORK HOURS AND SAFETY STANDARDS ACT (40 U.S.C. § 3701-3708). Where applicable, all contracts awarded by the non-federal entity in excess of $100,000 that involve the employment of mechanics or laborers must include a provision for compliance with 40 U.S.C. §§ 3702 and 3704, as supplemented by Department of Labor regulations (29 C.F.R. § 5). Under 40 U.S.C. § 3702 of the Act, each contractor must be required to compute the wages of every mechanic and laborer on the basis of a standard work week of 40 hours. Work in excess of the standard work week is permissible provided that the worker is compensated at a rate of not less than one and a half times the basic rate of pay for all hours worked in excess of 40

DocuSign Envelope ID: F416D837-E545-4A9D-8F62-28D5E4268B24

hours in the work week. The requirements of 40 U.S.C. § 3704 are applicable to construction work and provide that no laborer or mechanic must be required to work in surroundings or under working conditions which are unsanitary, hazardous or dangerous. These requirements do not apply to the purchases of supplies or materials or articles ordinarily available on the open market, or contracts for transportation or transmission of intelligence. This provision is hereby incorporated by reference into this Contract. Vendor certifies that during the term of an award for all contracts by Sourcewell resulting from this procurement process, Vendor must comply with applicable requirements as referenced above.

D. RIGHTS TO INVENTIONS MADE UNDER A CONTRACT OR AGREEMENT. If the federal award meets the definition of "funding agreement" under 37 C.F.R. § 401.2(a) and the recipient or subrecipient wishes to enter into a contract with a small business firm or nonprofit organization regarding the substitution of parties, assignment or performance of experimental, developmental, or research work under that "funding agreement," the recipient or subrecipient must comply with the requirements of 37 C.F.R. § 401, "Rights to Inventions Made by Nonprofit Organizations and Small Business Firms Under Government Grants, Contracts and Cooperative Agreements," and any implementing regulations issued by the awarding agency. Vendor certifies that during the term of an award for all contracts by Sourcewell resulting from this procurement process, Vendor must comply with applicable requirements as referenced above.

E. CLEAN AIR ACT (42 U.S.C. § 7401-7671Q.) AND THE FEDERAL WATER POLLUTION CONTROL ACT (33 U.S.C. § 1251-1387). Contracts and subgrants of amounts in excess of $150,000 require the non-federal award to agree to comply with all applicable standards, orders or regulations issued pursuant to the Clean Air Act (42 U.S.C. § 7401- 7671q) and the Federal Water Pollution Control Act as amended (33 U.S.C. § 1251- 1387). Violations must be reported to the Federal awarding agency and the Regional Office of the Environmental Protection Agency (EPA). Vendor certifies that during the term of this Contract will comply with applicable requirements as referenced above.

F. DEBARMENT AND SUSPENSION (EXECUTIVE ORDERS 12549 AND 12689). A contract award (see 2 C.F.R. § 180.220) must not be made to parties listed on the government wide exclusions in the System for Award Management (SAM), in accordance with the OMB guidelines at 2 C.F.R. §180 that implement Executive Orders 12549 (3 C.F.R. § 1986 Comp., p. 189) and 12689 (3 C.F.R. § 1989 Comp., p. 235), "Debarment and Suspension." SAM Exclusions contains the names of parties debarred, suspended, or otherwise excluded by agencies, as well as parties declared ineligible under statutory or regulatory authority other than Executive Order 12549. Vendor certifies that neither it nor its principals are presently debarred, suspended, proposed for debarment, declared ineligible, or voluntarily excluded from participation by any federal department or agency.

G. BYRD ANTI-LOBBYING AMENDMENT, AS AMENDED (31 U.S.C. § 1352). Vendors must file any required certifications. Vendors must not have used federal appropriated funds to pay any person or organization for influencing or attempting to influence an officer or employee of any

DocuSign Envelope ID: F416D837-E545-4A9D-8F62-28D5E4268B24

agency, a member of Congress, officer or employee of Congress, or an employee of a member of Congress in connection with obtaining any federal contract, grant, or any other award covered by 31 U.S.C. § 1352. Vendors must disclose any lobbying with non-federal funds that takes place in connection with obtaining any federal award. Such disclosures are forwarded from tier to tier up to the non-federal award. Vendors must file all certifications and disclosures required by, and otherwise comply with, the Byrd Anti-Lobbying Amendment (31 U.S.C. § 1352).

H. RECORD RETENTION REQUIREMENTS. To the extent applicable, Vendor must comply with the record retention requirements detailed in 2 C.F.R. § 200.333. The Vendor further certifies that it will retain all records as required by 2 C.F.R. § 200.333 for a period of 3 years after grantees or subgrantees submit final expenditure reports or quarterly or annual financial reports, as applicable, and all other pending matters are closed.

I. ENERGY POLICY AND CONSERVATION ACT COMPLIANCE. To the extent applicable, Vendor must comply with the mandatory standards and policies relating to energy efficiency which are contained in the state energy conservation plan issued in compliance with the Energy Policy and Conservation Act.

J. BUY AMERICAN PROVISIONS COMPLIANCE. To the extent applicable, Vendor must comply with all applicable provisions of the Buy American Act. Purchases made in accordance with the Buy American Act must follow the applicable procurement rules calling for free and open competition.

K. ACCESS TO RECORDS (2 C.F.R. § 200.336). Vendor agrees that duly authorized representatives of a federal agency must have access to any books, documents, papers and records of Vendor that are directly pertinent to Vendor's discharge of its obligations under this Contract for the purpose of making audits, examinations, excerpts, and transcriptions. The right also includes timely and reasonable access to Vendor's personnel for the purpose of interview and discussion relating to such documents.

L. PROCUREMENT OF RECOVERED MATERIALS (2 C.F.R. § 200.322). A non-federal entity that is a state agency or agency of a political subdivision of a state and its contractors must comply with Section 6002 of the Solid Waste Disposal Act, as amended by the Resource Conservation and Recovery Act. The requirements of Section 6002 include procuring only items designated in guidelines of the Environmental Protection Agency (EPA) at 40 C.F.R. § 247 that contain the highest percentage of recovered materials practicable, consistent with maintaining a satisfactory level of competition, where the purchase price of the item exceeds $10,000 or the value of the quantity acquired during the preceding fiscal year exceeded $10,000; procuring solid waste management services in a manner that maximizes energy and resource recovery; and establishing an affirmative procurement program for procurement of recovered materials identified in the EPA guidelines.

22. CANCELLATION

Sourcewell or Vendor may cancel this Contract at any time, with or without cause, upon 60 days' written notice to the other party. However, Sourcewell may cancel this Contract immediately upon discovery of a material defect in any certification made in Vendor's Proposal. Cancellation of this Contract does not relieve either party of financial, product, or service obligations incurred or accrued prior to cancellation.

Sourcewell

DocuSigned by:
Jeremy Schwartz
C0FD2A139D06489...

By: _____
Jeremy Schwartz
Title: Director of Operations & Procurement/CPO

Date: 2/15/2021 | 10:36 PM CST

PlayPower, Inc.

DocuSigned by:
W. Todd Brinker
B286C633F68749C...

By: _____
W. Todd Brinker
Title: Senior Vice President Global Sales & Marketing Outdoor Play

Date: 2/15/2021 | 2:23 PM CST

Approved:

DocuSigned by:
Chad Coauette
7E42B8F817A64CC...

By: _____
Chad Coauette
Title: Executive Director/CEO

Date: 2/15/2021 | 10:46 PM CST

RFP 010521 - Playground and Water Play Equipment with Related Accessories and Services

Vendor Details

Company Name:	PlayPower
Address:	11515 Vanstory Drive Suite 100 Huntersville, NC 28078
Contact:	Christine Stepp
Email:	christine.stepp@playpower.com
Phone:	570-259-5466
HST#:	431681424

Submission Details

Created On:	Tuesday November 17, 2020 12:27:42
Submitted On:	Tuesday January 05, 2021 16:13:14
Submitted By:	Christine Stepp
Email:	christine.stepp@playpower.com
Transaction #:	21ef8062-9c3f-45fb-8ccb-e615e3baf910
Submitter's IP Address:	149.20.204.131

Specifications

Table 1: Proposer Identity & Authorized Representatives

General Instructions (applies to all Tables) Sourcewell prefers a brief but thorough response to each question. Please do not merely attach additional documents to your response without also providing a substantive response. Do not leave answers blank; mark “NA” if the question does not apply to you (preferably with an explanation).

Line Item	Question	Response *	
1	Proposer Legal Name (and applicable d/b/a, if any):	PlayPower, Inc.	*
2	Proposer Address:	11515 Vanstory Drive #100, Huntersville, NC 28078	*
3	Proposer website address:	www.PlayPower.com	*
4	Proposer's Authorized Representative (name, title, address, email address & phone) (The representative must have authority to sign the “Proposer’s Assurance of Compliance” on behalf of the Proposer and, in the event of award, will be expected to execute the resulting contract):	W. Todd Brinker Senior Vice President, Global Sales & Marketing Outdoor Play 11515 Vanstory Drive, Suite 100 Huntersville, NC 28078 704-576-7928	*
5	Proposer's primary contact for this proposal (name, title, address, email address & phone):	Christine Stepp Sales, Marketing and Contract Administrator 1000 Buffalo Road, Lewisburg, PA 17837 570-522-5441	*
6	Proposer's other contacts for this proposal, if any (name, title, address, email address & phone):	Bill Wilhite – EZ Dock Phone: 417 -737-2110 Email: Bill.Wilhite@playpower.com Brett Kidd - Little Tikes Commercial Phone: 678-432-0077 Cell: 573-701-2236 Email: Brett.Kidd@playpower.com Mike Sutton – Miracle Recreation Phone: 724-458-4986 Cell: 715-922-8707 Email: Mike.Sutton@playpower.com Jennifer Smith Phone: 225-907-4749 Cell: 225-424-8843 Email: Jennifer@nofault.com David Sheedy – Playworld Phone: 573-366-6337 Email: David.Sheedy@playpower.com Christine Stepp – PlayPower Phone: 527-259-5466 Email: Christine.Stepp@playpower.com Brock Hodge - Soft Play Phone: 704-948-3430 Mobile:704-904-4067 Email: Brock.Hodge@playpower.com Kevin Spence – USA Shade Phone: 214-269-4112 Mobile: 214-587-9397 Email: kevin.spence@USA-Shade.com Dan Sullivan – Wabash Valley Phone: 813-760-0382 Email: daniel.sullivan@playpower.com	

Table 2: Company Information and Financial Strength

Line Item	Question	Response *	
7	Provide a brief history of your company, including your company's core values, business philosophy, and industry longevity related to the requested equipment, products or services.	PlayPower, Inc. is the WORLD'S LARGEST, fully integrated manufacturer of commercial playground equipment, park & site amenities, fabric shade structures, floating dock systems, lifts for boats and personal water craft, innovative surfacing products and indoor contained play structures. PlayPower is headquartered in Huntersville NC, with marketing, sales and manufacturing facilities in Baton Rouge, LA, Englewood, CO, Monett MO, Dallas TX, Lewisburg PA, Huntersville NC, United Kingdom, Poland and Scotland. PlayPower's VISION is to be the leader in creating legendary play and recreation experiences around the world. PlayPower's MISSION is to design and manufacture fun and safe play and recreation equipment for all ages and abilities. We will be recognized as the leader for inspiring and creating innovative products and providing superior customer service. We will leverage our brands globally to the benefit of those who use our products and to our customers, employees, and shareholders. PlayPower VALUES honesty and integrity, respect and caring for others, openness and collaboration, individual and team accountability, passion and purpose. PlayPower began in 1927 with Miracle Recreation and is now comprised of multiple companies (brands) focused on playgrounds, commercial recreation and leisure. PlayPower's impressive portfolio of companies include: o Miracle Recreation Equipment Company o Little Tikes Commercial o Playworld o Wabash Valley o EZ Dock o USA Shade & Fabric Structures o Soft Play o Playtime o No Fault o Tayplay o HAGS (international only) PlayPower's companies are leaders in the markets in which they serve and in combination, have HUNDREDS of years of experience bringing play and recreation to life.	*
8	What are your company's expectations in the event of an award?	• We will launch our contract heavily by targeting Sourcewell members with all of our North American brands: Little Tikes Commercial, Miracle Recreation, Playworld, EZ Dock, Soft Play, USA Shade, Wabash Valley and No Fault • We will continue to lead Sourcewell as our North American and Canadian cooperative contract solution, marketing through our corporate websites, dealer/rep websites, catalogs, brochures, mailings, social media, and trade shows • Our expectation, with having multiple brands in our portfolio, and as a turnkey solution, PlayPower's Sourcewell contract sales would exceed $100M over the term of the contract.	*
9	Demonstrate your financial strength and stability with meaningful data. This could include such items as financial statements, SEC filings, credit and bond ratings, letters of credit, and detailed reference letters. Upload supporting documents (as applicable) in the document upload section of your response.	Please refer to the PlayPower Holdings Inc. and Subsidiaries 2019 Final pdf attached to this response.	*
10	What is your US market share for the solutions that you are proposing?	According to the Q2 2020 IPEMA Report (latest report), PlayPower's Outdoor Playground equipment market share is approximately 33.0% in the United States.	*
11	What is your Canadian market share for the solutions that you are proposing?	According to the Q2 2020 IPEMA Report (latest report), PlayPower's market share is 26.0% in Canada.	*
12	Has your business ever petitioned for bankruptcy protection? If so, explain in detail.	No	*

13	How is your organization best described: is it a manufacturer, a distributor/dealer/reseller, or a service provider? Answer whichever question (either a) or b) just below) best applies to your organization. a) If your company is best described as a distributor/dealer/reseller (or similar entity), provide your written authorization to act as a distributor/dealer/reseller for the manufacturer of the products proposed in this RFP. If applicable, is your dealer network independent or company owned? b) If your company is best described as a manufacturer or service provider, describe your relationship with your sales and service force and with your dealer network in delivering the products and services proposed in this RFP. Are these individuals your employees, or the employees of a third party?	PlayPower, Inc. Is a manufacturer of Recreation and Playground Equipment, Accessories and Supplies. PlayPower Inc., with a few exceptions of direct sales representatives, operates with independent representatives/dealers that cover all areas of North America and Internationally. All representatives, as contractually responsible, sell, deliver and coordinate installation of all products proposed within this RFP. In addition, PlayPower's installers are factory certified to repair and service PlayPower's recreation and playground equipment, accessories, and supplies.	*
14	If applicable, provide a detailed explanation outlining the licenses and certifications that are both required to be held, and actually held, by your organization (including third parties and subcontractors that you use) in pursuit of the business contemplated by this RFP.	PlayPower is licensed to sell in all 50 states, 10 provinces and globally. We are committed to provide Sourcewell and their members a safe, enjoyable, positive environment to play and grow. Our commitment to provide such an environment begins with meeting and/or exceeding safety performance specifications established by organizations and regulatory bodies such as ASTM International, CPSC, CSA and EN. We not only comply with these standards and guidelines, we also actively participate in ASTM and CPSC development, and are active members of IPEMA. Our employees, sales representatives, distributors, dealers and trained installers take great pride in the commitment of safety in every aspect of designing, manufacturing and installing recreation and playground equipment, accessories and supplies. They have the knowledge and experience to provide positive recreation and play environments that offer challenge and maximum play value for children of all ages and abilities. In the interest of safety, IPEMA provides a third-party Certification Service whereby a designated independent laboratory validates a participant's certification of conformance to ASTM F1487 & ASTM F2373, Standard Consumer Safety Performance Specification for Playground Equipment for Public Use. The use of the corresponding logos in all of PlayPower's outdoor brand catalogs signifies PlayPower has received written validation from the independent laboratory that the product(s) associated with the use of the logo conforms with the requirements of the indicated standard. Please refer to IPEMA's web site to confirm product certification.	*
15	Provide all "Suspension or Debarment" information that has applied to your organization during the past ten years.	None	*

Table 3: Industry Recognition & Marketplace Success

Line Item	Question	Response *	
16	Describe any relevant industry awards or recognition that your company has received in the past five years	• PlayForm 7 – Playworld – 2016 IDEA Silver Award. Recognized by Architect's newspaper best products of 2016 award • PlayCubes – Playworld – Winner of Architectrual Records 2016 Product of the Year • The Chicago Athenaeum: Museum of Architecture and Design awarded Playworld with The Good Design Award for PlayCubes, published in the Good Design Yearbook for 2019-2020. • NRPA Best Booth – Miracle - 2018	*
17	What percentage of your sales are to the governmental sector in the past three years	PlayPower percentage of sales to the government sector as as follows: 2020 - 62% 2019 - 66% 2018 - 71%	*
18	What percentage of your sales are to the education sector in the past three years	PlayPower percentage of sales to the education sector are as follows: 2020 - 29% 2019 - 25% 2018 - 22%	*
19	List any state, provincial, or cooperative purchasing contracts that you hold. What is the annual sales volume for each of these contracts over the past three years?	2018 2019 2020 CMAS $429,901.58 - - COA - $205,565.74 $55,895.35 COSTARS $102,812.68 $376,404.54 $351,116.88 DE USAGE $5,690.00 $17,322.82 $10,690.00 NJ STATE $295,687.34 $442,753.06 $239,850.35 PREP - $237,565.00 $561,812.00 SOURCEWEL $38,840,671.82 $29,092,389.51 $26,043,818.71 HGAC $1,192,953 $236,858 $87,436 NASPO $2,256,692 $946,192 $288,288 KPN $212,068 $15,496 $2,703	*
20	List any GSA contracts or Standing Offers and Supply Arrangements (SOSA) that you hold. What is the annual sales volume for each of these contracts over the past three years?	2019 2018 2017 GS-03F-072GA Miracle Recreation $14,061 $94,426 $157,563 GS-03F-055AA Little Tikes Commercial $41,812 $12,788 $74,698 GS-03F-0071T Playworld $8,680 $78,008 $84,356 GS-03F-0001U USA Shade $75,248 $183,919 $246,227	*

Table 4: References/Testimonials

Line Item 21. Supply reference information from three customers who are eligible to be Sourcewell participating entities.

Entity Name *	Contact Name *	Phone Number *	
Saugus Union School District	Lori Rubenstein – Director of Project Maintenance	661-294-5300 (ext. 5154)	*
Houston County BOE	Bill Dollar – Director of Maintenance	478-447-9301	*
Northside ISD	Linda Seewald – Coordinator Physical Education and Health	210-397-8630	*

Table 5: Top Five Government or Education Customers

Line Item 22. Provide a list of your top five government, education, or non-profit customers (entity name is optional), including entity type, the state or province the entity is located in, scope of the project(s), size of transaction(s), and dollar volumes from the past three years.

Entity Name	Entity Type *	State / Province *	Scope of Work *	Size of Transactions *	Dollar Volume Past Three Years *	
ABC Unified School District School	Education	California - CA	Surfacing	$580,000	$580,000	*
Northside ISD	Education	Texas - TX	Playground Equipment	$25,000	$1,200,000	*
Fulton County School District	Education	Georgia - GA	Playground Equipment	$16,666	$1,200,000	*
MS/FEMA CDC Grant	Government	Mississippi - MS	Playground Equipment	$15,833	$3,800,000	*
NASA	Government	Florida - FL	Indoor Play Equipment	$2,200,000	#2,300,000	*

Table 6: Ability to Sell and Deliver Service

Describe your company's capability to meet the needs of Sourcewell participating entities across the US and Canada, as applicable. Your response should address in detail at least the following areas: locations of your network of sales and service providers, the number of workers (full-time equivalents) involved in each sector, whether these workers are your direct employees (or employees of a third party), and any overlap between the sales and service functions.

Line Item	Question	Response *	
23	Sales force.	PlayPower's 700+ professional sales representatives/distributors/dealers are eager to provide service to Sourcewell members. Our large portfolio and sales network provides a significant advantage for Sourcewell members in being able to find almost all of their recreation and playground needs with PlayPower.	*
24	Dealer network or other distribution methods.	The majority of PlayPower's representatives, dealers and distributors are independent agencies, with a few exceptions where territories are covered with direct employees.	*
25	Service force.	All representatives, distributors, dealers and installers are factory trained and certified to either sell and/or service our products. Included is a listing of our comprehensive global list of representatives for each brand.	*
26	Describe in detail the process and procedure of your customer service program, if applicable. Include your response-time capabilities and commitments, as well as any incentives that help your providers meet your stated service goals or promises.	All inquiries regarding Customer service, warranty and repair of PlayPower recreation and playground equipment and accessories should be coordinated with our independent representative network. In addition, Sourcewell members can contact each PlayPower division directly. • Little Tikes - Claims can be submitted via email to ltc_customer_care@playpower.com where they are reviewed by our Technical Support Team. Customers can also call 800- 497-5246 and our Customer Service team will be happy to assist during normal business hours (7:00 to 5:00 CST). After hours or on weekends our 24-hour Customer Service Hotline is available by calling 866-LTC-4FUN (866-582-4386) • Miracle - Technical support line (888) 458-2752 seven days a week, 24 hours a day • Playworld –Technical support line (800) 233-8404 is available 24/7 but all calls will be handled during normal business hours 8:00am to 4:30pm EST. We have info@playworld.com for requests and we also have online chat available 8:00am-4:30pm EST on our website. • Wabash Valley – Technical support line (800) 253-8619 during the business hours of 8:00 to 5:00 EST M-F • USA Shade – Technical support line (800) 966-5005 during the business hours of 8:00 to 5:00 CST M-F • EZ Dock -(800) 654-8168, our Technical Support and Sales Administration Team will assist during normal business hours 7:00 to 5:00 CST M-F. • Soft Play- (800) 782-7529 Ext. 3429, any of our Technical Support or Sales Administration Team will assist during normal business hours 7:00 to 5:00 CST M-F. • No Fault - Main Office 1-800-232-7766 M-F during normal business hours of 8:00am-5:00pm	*
27	Describe your ability and willingness to provide your products and services to Sourcewell participating entities in the United States.	All products and services proposed by PlayPower in this RFP are available to Sourcewell members in all 50 US states.	*
28	Describe your ability and willingness to provide your products and services to Sourcewell participating entities in Canada.	All products and services proposed by PlayPower in this RFP are available to Sourcewell members in the 10 provinces of Canada.	*
29	Identify any geographic areas of the United States or Canada that you will NOT be fully serving through the proposed contract.	PlayPower covers ALL geographic areas of the United States and Canada.	*
30	Identify any Sourcewell participating entity sectors (i.e., government, education, not-for-profit) that you will NOT be fully serving through the proposed contract. Explain in detail. For example, does your company have only a regional presence, or do other cooperative purchasing contracts limit your ability to promote another contract?	PlayPower serves all participating entity sectors and does not have any limitations to do so.	*
31	Define any specific contract requirements or restrictions that would apply to our participating entities in Hawaii and Alaska and in US Territories.	There are not any contract restrictions that would apply to members in Hawaii, Alaska and in the US territories.	*

Table 7: Marketing Plan

Line Item	Question	Response *	
32	Describe your marketing strategy for promoting this contract opportunity. Upload representative samples of your marketing materials (if applicable) in the document upload section of your response.	General Marketing Program Strategy: The marketing plan objective is to increase the sales closure rate of SOURCEWELL projects by providing high-quality leads and effective sales tools to our sales representatives. We will promote the program nationally, including a multi-program approach that overlays with our current marketing strategy and plans. Details of those programs are as follows: Catalogs/Brochures • SOURCEWELL Brochures • We have created brochures (one per brand) detailing the benefits of our SOURCEWELL contract that is utilized during sales presentations and trade shows. • Full Line Catalogs • Our full line product catalog is produced and distributed annually and is available in January. • We include information regarding the SOURCEWELL program within the catalogs. Websites: • Features SOURCEWELL in our partner and funding pages on each of our brand websites • https://www.miracle-recreation.com/planning/our-partners/sourcewell/ • https://littletikescommercial.com/sourcewell/ • https://playworld.com/sourcewell • https://www.softplay.com/capabilities/njpa/ • https://www.ez-dock.com/resources/njpa/ Email/PR: • Email Campaigns • SOURCEWELL will be featured in email campaigns to those individuals that have opted-in to that brand e-communications. Social: • Social Media Campaigns •Posts on various social platforms, including Facebook and LinkedIn, per brand Trade Shows • We have a trade show plan in place and shall include representation of the program at each trade show including product brochures. • The 3 outdoor play brands have large booths at the annual NRPA & ASLA tradeshows. Sales Tools/Training • PowerPoint sales presentation was created to discuss selling features and benefits of our Sourcewell contract for PlayPower's representatives. • Regular email newsletter to PlayPower sales representatives from sales VPs, promoting the Sourcewell contract and our sales tools for promoting our Sourcewell contract. • Sales representative communication portal provides training/sales tools/resources for our sales representatives to help promote our Sourcewell contract, programs and services. Examples of our marketing materials as they relate to SOURCEWELL are included separately in the PowerPoint which has been included with this RFP submittal.	*
33	Describe your use of technology and digital data (e.g., social media, metadata usage) to enhance marketing effectiveness.	Our current marketing strategy includes programs to promote our Sourcewell contract, products and services through multiple digital media channels including: • Brand websites, on partner and funding pages • Email marketing campaigns • Social media, including Facebook and LinkedIn	*
34	In your view, what is Sourcewell's role in promoting contracts arising out of this RFP? How will you integrate a Sourcewell-awarded contract into your sales process?	We would expect Sourcewell to market this partnership on Sourcewell's website, at trade shows, in publications and directly to its members. We would expect on rare occasions, a representative of Sourcewell to potentially help with customer calls & visits when needed, and also to attend our annual sales meetings for our outdoor equipment brands. In understanding of this, PlayPower Inc. understands that the success of this program is most contingent upon our marketing of this partnership in the marketplace through publication, trade shows, our websites and direct-to-customer marketing through our vast network of representatives. PlayPower takes great pride in its brands and looks forward to continuing to work with Sourcewell and marketing a partnership that includes sales training for all of our rep partners/distributors/dealers, catalogs and digital marketing. Our commitment and message to Sourcewell and its members will always remain clear and constant: we are 100% committed to Sourcewell from our executive level through our rep network.	*
35	Are your products or services available through an e-procurement ordering process? If so, describe your e-procurement system and how governmental and educational customers have used it.	Products and services are not available through an e-procurement ordering process. Playgrounds and recreation related products are often very custom driven project by project. Because of this, an e-procurement solution is not feasible with PlayPower's offering of products and services.	*

Table 8: Value-Added Attributes

Line Item	Question	Response *	
36	Describe any product, equipment, maintenance, or operator training programs that you offer to Sourcewell participating entities. Include details, such as whether training is standard or optional, who provides training, and any costs that apply.	PlayPower is committed to providing safe, reliable products. There is not a need to train Sourcewell members since all of our representatives, dealers, distributors and installers go through extensive product training. Sourcewell members have been invited to visit our factories, however formal training is not required.	*
37	Describe any technological advances that your proposed products or services offer.	Pride in Engineering and Design: Whatever Sourcewell members' level of recreation and/or playground expertise is, PlayPower will provide as much help as needed. Members can virtually design their own playground equipment, or our network of design consultants will assist every step of the way. Our advanced computer-assisted design (CAD) capabilities provide customers with the most versatile, accurate commercial playground equipment design service available. Our designers use advanced solid modeling (3D) design software to develop new and exciting products. Direct electronic access to accurate, up-to-date product information is available to all PlayPower personnel, which includes PlayPower sales representatives, who can do on-the-spot CAD designs for customers. The design(s) then transmits to our internal system for production. Our consultants have access to all product documentation at all times and can produce instant two-dimensional top views or hidden-line three-dimensional proposal drawings of any custom design. They can also send information to PlayPower for rapid production of high-resolution color views of the design in a variety of sizes. Quality Products, Manufacturing, and Installation: PlayPower's commercial playground equipment, play structures, dock systems etc. are manufactured utilizing proven processes that have been honed over our over combined 200+ years in business. Our state-of-the-art manufacturing processes include, but are not limited to: • Powder-coating paint system • Computer Numeric Controlled pipe/tube bending and plasma cutting for precise and fun designs • Rotational molding machines, including the largest in the industry-- which provide the capacity for more innovative and fun products • Compounded Resin – First in the industry to make/mix our own compounded resins. This is virtually a 99.9999% recycled process with minimal waste. • Laser Tube Cutting – The first manufacturer in the industry to offer this precision method of cutting and creating intricate designs • MIG/TIG weld stations • Robotic welding • Fiberglass fabrication • Custom manufacturing – one of only a few playground manufacturers in the world to offer this • In-house CAD design team to help create your dream playground • All PlayPower representatives and installers are factory trained and certified • PlayPower has a custom design group and custom design facility enabling us to meet every need of Sourcewell members • PlayPower has the engineering, design and manufacturing capability to custom build a greater breadth of equipment than any other source, i.e. outdoor (steel & wood), contained play, early childhood themed, etc. Materials and Innovation: PlayPower creates state-of-the-art recreation, playground equipment, outdoor fitness, dock systems, contained play systems, shade, benches, tables, etc. utilizing the best in materials and processes. Just a few of our state-of-the-art innovations and features are: • Versalok® II clamping system makes installation of components a snap. The clamp is made from up to 100% recycled aluminum alloy, and all fastening hardware is stainless steel and tamper-resistant. • GatorGrip® - Miracle's handrails and rungs feature GatorGrip, with a texture that is friendly and reassuring to small hands. • Flo-Coat® - Our state-of-the-art Flo-Coat® steel tubing was developed specifically for children's playground equipment, and is zinc galvanized coated inside and out for superior resistance to abrasions, scratches, salt, and the elements. • Mira-Cote® - All metal components are finished with Mira-Cote- a durable, electrostatically applied, non-toxic, lead-free, polyester powder coating that's available in almost 30 colors. • Mira-Therm® - All decks, steps, ramps, and bridges, as well as a variety of complementary items, are coated with Mira-Therm®, our proprietary brand of polyvinyl chloride (PVC) containing UV stabilizers, color pigments, and flame retardants. Mira-Therm® coated punched steel with folded edges provides quick drainage, with holes too small for fingers. • Naturtek - Our exclusive material is the most realistic natural imitation in the marketplace. It not only looks real, but feels real. That's because we've been able to replicate the actual	*

		look and feel of real rocks, trees and stumps. This product is unlike any other. • Gelefish - We've transformed the playground by fusing trend-setting designs with traditional play events that kids love. Gelefish offers a customizable design with countless possibilities of play component configurations delivering more fun-per-foot. • EZ Dock Flotation Chambers - Simply put, our patented flotation design creates stability. When you walk on an EZ Dock, you will immediately notice the difference when compared to other floating docks. Our docks don't just float, they actually enhance steadiness thanks to the compression and suction of the hollow chambers on the underside. • EZ Dock Connection Couplers - EZ Dock's patented connection couplers allow sections to move independently under high-stress conditions, while still providing unified firmness. Plus, our polyethylene construction provides outstanding modularity, buoyancy, functionality and safety. • NEOS outdoor electronic playgrounds were the first of its kind introduced in the marketplace. Our fun electronic games inspire kids of all ages to go out and play. • PlayArmor™ is the first antimicrobial coating specifically introduced in the recreation industry that protects playground equipment and site amenities. It was created by biochemists and has been registered for use by the US Environmental Protection Agency (EPA). We are currently working and expect to have EPA approval on having PlayArmor approved in each of the 50 US states and similar approvals in all provinces in Canada. Product Testing & Conformance: PlayPower has developed and maintained one the most strenuous product testing programs in the industry. Product safety starts before the concept phase of the development process. Our staff plays a very active role in the development and maintenance of safety and performance guidelines and standards, not only here in the U.S., but also internationally. Injury trends and market changes are tracked and we proactively implement this knowledge to our current and future products. During the design phase of development, we use sophisticated software to check and validate designs prior to prototyping. We test for safety conditions, such as entrapment or protrusions, as well as structural performance using finite element analysis. Once a concept is approved, a prototype product is developed and all testing is repeated using the physical model. The most severe testing requirements gleaned from standards worldwide are applied to prototypes. Components are subjected to loading requirement of various standards and the product is re-analyzed after the test to make sure any permanent deformation does not affect product safety. These loading requirements have large factors of safety built in, which cover situations of misuse and abuse. In addition to the normal static loading requirements that define structural performance in playground standards like ASTM Fl487, PlayPower takes testing to a higher level. All moving and selected stationary products are subjected to dynamic testing which simulates usage over the life of the product. Components are loaded with the weight of the maximum user and cycled through their normal motion range for at least one million cycles. This process identifies material stresses or component wear that are missed in static load testing. We do not stop testing when a product is introduced to the market. We maintain a company policy that no test may exceed a 5-year span, which equates to retesting more than 20% of our released product annually. We also participate in the IPEMA (International Play Equipment Manufacturers Association) Equipment Certification Program which is a 3rd party validation process of our ASTM required testing. All playground products can be found on the IPEMA certification program website and a certificate of compliance can be generated and printed. PlayPower also conducts ongoing testing of our materials via UV and salt spray testing. Daily tests are conducted of production systems including paint/coatings cure and adhesion testing, impact testing, and color verification and cure testing on plastic components. • PlayPower has the most diversified line of products & services in the industry with well over 300 combined years of business experience. • PlayPower is the world's largest fully integrated manufacturer of commercial playground equipment and recreation equipment accessories and supplies.	

38	Describe any “green” initiatives that relate to your company or to your products or services, and include a list of the certifying agency for each.	Environmentally friendly playgrounds aren't a passing fad, they're here for good. Playing is serious business, especially when you consider that playtime helps promote creativity, problem-solving, ability and intellectual development. That's precisely why we pay extra-special attention to our playgrounds and site furnishings. Simple design changes go a long way towards improving how children play, learn and interact with nature. PlayPower creates playgrounds that are fantastic for your budget, Mother Nature, and most importantly, the kids. We recycle unused powder coat paint in certain colors, after it is properly reclaimed during the painting process. Imagine piles of crumpled steel and truckloads of aluminum cans transformed into state-of-the-art playground equipment. That's essentially what happens when PlayPower puts recycling to work. We produce our playground equipment using as much recycled and recyclable material as we can use, while still maintaining the safety, durability and structural integrity you have come to expect from PlayPower. PlayPower’s steel posts, handrails, and guardrails are sturdy, durable, and economical, and are made from at least 50% recycled steel. Post clamps and caps are made from as much as 100% post-consumer aluminum. And our roto-molded plastic slides are made from 100% recyclable resins. Simply put, nearly all of PlayPower’s playground equipment is produced from at least 50% recyclable materials.
		• PlayPower meets ISO 9001, ISO 14001Standards
		• Other environmental initiatives:
		  • All packing and shipping materials are 100% recyclable.
		  • Recycling 95%+ of our waste.
		  • Many of our raw materials contain 25% to 100% recycled content.
		  • Reduced energy usage through conservation and lean manufacturing implementation.
		  • Audits material content and operations for safety and environmental concerns
			*

39	Identify any third-party issued eco-labels, ratings or certifications that your company has received for the equipment or products included in your Proposal related to energy efficiency or conservation, life-cycle design (cradle-to-cradle), or other green/sustainability factors.	PlayPower meets ISO 9001, ISO 14001 Standards	*
40	Describe any Women or Minority Business Entity (WMBE), Small Business Entity (SBE), or veteran owned business certifications that your company or hub partners have obtained. Upload documentation of certification (as applicable) in the document upload section of your response.	While the majority of our representative agencies are classified as Small Businesses, we have created a list, below, to showcase our WMBE and VOSB agencies: Happy Playgrounds WBE AR, OK Imagine Nation WBE IL Jefcoat Recreation WBE MS Metro Recreation VOSB MD, WV Miracle of KY & TN WBE KY, TN Playworx VOSB FL, GA Recreation Plus DBE, SBE, WMBE CO, WY Site Specifics WBE MA Hahn Enterprises WMBE LA, AR MTS Recreation WBE VA Pelican Playground WMBE LA, MS Hasley Recreation WBE Al, GA Miller Recreation VOSB C. FL	*

41	What unique attributes does your company, your products, or your services offer to Sourcewell participating entities? What makes your proposed solutions unique in your industry as it applies to Sourcewell participating entities?	• PlayPower has a large, 700+ group of professional sales representatives/distributors/dealers to provide service to Sourcewell members. No one else in the industry even comes close to this! This provides a significant advantage for Sourcewell members in being able to find all of their recreation and playground equipment needs in one place with PlayPower. • PlayCreator - Proprietary Software with Safety & ADA Accessibility in mind • PlayCreator, our proprietary playground design, rules-based software systems only allow ADA compliancy design. Our commitment is to provide accessible playground equipment in order to promote a positive play environment for children of all abilities. We believe play must be inclusive, and by removing barriers for all children, we provide play and learning opportunities which we are excited and proud of. Providing accessibility to the play space entails more than just complying with minimum accessibility requirements, standards and laws. It means providing a place where children of all abilities can experience play together. PlayPower's play equipment allows customers to configure play areas that are compliant with the Americans with Disabilities Act (ADA) Accessibility Guidelines for Play Areas. • Design for Safety • Nothing is more important than providing a safe, positive environment for children to play. Our commitment to providing such an environment begins with meeting and/or exceeding safety performance specifications established by organizations and regulatory bodies such as ASTM International, CPSC, CSA and EN. We not only comply with these standards and guidelines we also actively participate with ASTM and CPSC in their development, and we are active members of IPEMA. Our employees, sales representatives, and trained installers take great pride in this commitment to safety in every aspect of designing, manufacturing and installing playground equipment, and they have the knowledge and experience to provide positive play environments that offer challenge and maximum play value for children of all ages and abilities. In the interest of playground safety, IPEMA provides a third-party Certification Service whereby a designated independent laboratory validates a participant's certification of conformance to ASTM Fl487, Standard Consumer Safety Performance Specification for Playground Equipment for Public Use. The use of the corresponding logo in our catalogs signifies that we have received written validation from the independent laboratory that product(s) conform to the requirements of the indicated standard. SOURCEWELL members can also check the IPEMA web site to confirm product certification. • Financing • Financing - PlayPower has a business relationship and partnership with NCL Government Capital as our financing option for our public & non-profit markets • World's Largest, Fully Integrated Manufacturer • Rotational Molding – not all manufacturers do this in-house • Soft Goods Assembly • PlayPower is 100% committed to Sourcewell and its members as we have already proven during our previous contract periods • David Sheedy has had proven success in launching, promoting, selling and scaling our Sourcewell contract to its current level of success. David is anxious and excited to do this again with all of our new brands and our entire sales network. • PlayPower is already familiar inside and out with Sourcewell and the needs of Sourcewell members. • We have a proven track record from selling our previous Sourcewell contracts. More importantly, we help sell the benefits of Sourcewell and ALL of its contracts – we have proven that we make Sourcewell stronger and this is to the benefit of Sourcewell, its members and other Sourcewell vendors.	*

Table 9: Warranty

Describe in detail your manufacturer warranty program, including conditions and requirements to qualify, claims procedure, and overall structure. You may upload representative samples of your warranty materials (if applicable) in the document upload section of your response in addition to responding to the questions below.

Line Item	Question	Response *	
42	Do your warranties cover all products, parts, and labor?	As a manufacturer of recreation and playground equipment, accessories and supplies, we warranty our materials and workmanship only. All labor, including installation and repairs can be coordinated and quoted on a case by case basis with our Representative/Distributor/ Dealer Network. A complete listing of our Representative/Distributor/ Dealer Network has been provided.	*
43	Do your warranties impose usage restrictions or other limitations that adversely affect coverage?	There are no usage limit restrictions with our warranty. Warranty statements for all of our brands have been supplied with this RFP submittal.	*
44	Do your warranties cover the expense of technicians' travel time and mileage to perform warranty repairs?	Industry standards dictate that travel time is not covered under warranty. While there are some exceptions, PlayPower typically adheres to this standard.	*
45	Are there any geographic regions of the United States or Canada (as applicable) for which you cannot provide a certified technician to perform warranty repairs? How will Sourcewell participating entities in these regions be provided service for warranty repair?	All PlayPower brands can provide warranty repairs in all regions of the United States and Canada.	*
46	Will you cover warranty service for items made by other manufacturers that are part of your proposal, or are these warranties issues typically passed on to the original equipment manufacturer?	PlayPower does not warranty products and services from other manufacturers. Any products sold from other manufacturers as a turn-key solution carry a warranty provided by the original manufacturer.	*
47	What are your proposed exchange and return programs and policies?	While the product is standard, the design of Recreation and Playground Equipment accessories and supplies is very customized. Due to this, PlayPower requires a 30% restocking fee for returns and exchanges.	*
48	Describe any service contract options for the items included in your proposal.	All of PlayPower's Representatives, Distributors, Dealers and Installers are factory trained and certified to sell and/or service and repair our products. All warranty and service work will be coordinated between the SOURCEWELL member and our representatives.	*

Table 10: Payment Terms and Financing Options

Line Item	Question	Response *	
49	What are your payment terms (e.g., net 10, net 30)?	Net 30 days upon invoicing	*
50	Describe any leasing or financing options available for use by educational or governmental entities.	PlayPower has partnered with NCL Government Capital to offer Sourcewell members a complete suite of finance solutions. NCL is a current Sourcewell financing contract holder and is an industry expert in municipal financing solutions. NCL will offer leasing terms from 12-120 months on transactions from $5,000.00 and up. Traditional leasing and financing programs will be offered along with programs specifically designed for schools and governmental entities including Tax-Exempt Municipal Leases and a Purchase Order Only program. There is no ownership, common ownership, or control between PlayPower and NCL.	*
51	Briefly describe your proposed order process. Include enough detail to support your ability to report quarterly sales to Sourcewell as described in the Contract template. For example, indicate whether your dealer network is included in your response and whether each dealer (or some other entity) will process the Sourcewell participating entities' purchase orders.	PlayPower often will invoice Sourcewell members directly which makes gathering of sales data very straightforward. Reps/dealers when billing directly are required to provide copies of purchase orders from members which will include PlayPower's Sourcewell contract number and the Sourcewell Member number. The proposed process will follow our current Sourcewell process that requires orders to be coded as an Sourcewell order at the time of submission.	*
52	Do you accept the P-card procurement and payment process? If so, is there any additional cost to Sourcewell participating entities for using this process?	No. The benefits of P-card procurement is most beneficial for smaller transactions. PlayPower's average playground sold exceeds $35,000 so the real benefits of P-card would not be recognized.	*

Table 11: Pricing and Delivery

Provide detailed pricing information in the questions that follow below. Keep in mind that reasonable price and product adjustments can be made during the term of an awarded Contract as desribed in the RFP, the template Contract, and the Sourcewell Price and Product Change Request Form.

Line Item	Question	Response *	
53	Describe your pricing model (e.g., line-item discounts or product-category discounts). Provide detailed pricing data (including standard or list pricing and the Sourcewell discounted price) on all of the items that you want Sourcewell to consider as part of your RFP response. If applicable, provide a SKU for each item in your proposal. Upload your pricing materials (if applicable) in the document upload section of your response.	Due to the size and scope of our product offering along with eight separate brands (companies) offered in this proposal and the discount structures varying by brand, a separate pricing discount file has been provided with this RFP submittal. Please refer to the uploaded Sourcewell RFP 010521 Pricing-Discount File.	*
54	Quantify the pricing discount represented by the pricing proposal in this response. For example, if the pricing in your response represents a percentage discount from MSRP or list, state the percentage or percentage range.	As stated previously, due to the size and scope of our product offering along with eight separate brands (companies) offered in this proposal and the discount structures varying by brand, a separate pricing discount file has been provided with this RFP submittal. Please refer to (list document name)	*
55	Describe any quantity or volume discounts or rebate programs that you offer.	Volume Rebates (per calendar year): 1. $500,000 - $999,999 1% rebate 2. $1,000,000 - $1,499,99 2% rebate 3. $1,500,000+ 3% rebate	*
56	Propose a method of facilitating “sourced” products or related services, which may be referred to as “open market” items or “nonstandard options”. For example, you may supply such items “at cost” or “at cost plus a percentage,” or you may supply a quote for each such request.	This service is coordinated by our independent representative/distributor/dealer networks. In the event PlayPower is doing the billing, we simply do a pass through with no markup on these services. Each service can vary due to location, size and scope of work.	*
57	Identify any element of the total cost of acquisition that is NOT included in the pricing submitted with your response. This includes all additional charges associated with a purchase that are not directly identified as freight or shipping charges. For example, list costs for items like pre-delivery inspection, installation, set up, mandatory training, or initial inspection. Identify any parties that impose such costs and their relationship to the Proposer.	Some projects related to our recreation and playground equipment products, accessories and supplies can be material-only procured or more often, a turn-key solution. In the event of a turnkey solution project, sourced work such as installation, curbing, sidewalks, landscaping, and any other types of non-equipment related work could be involved. This service can be coordinated by our independent representative/distributor/dealer networks. In the event PlayPower is doing the billing, we simply do a pass-through with no markup on these services. Each service can vary due to location, size and scope of work. Installation is specifically addressed in the pricing discount schedule which is provided with this RFP submittal.	*
58	If freight, delivery, or shipping is an additional cost to the Sourcewell participating entity, describe in detail the complete freight, shipping, and delivery program.	Any additional freight cost will be evaluated by PlayPower's shipping department. The best available rate and service will be passed on to Sourcewell members during the quote process.	*
59	Specifically describe freight, shipping, and delivery terms or programs available for Alaska, Hawaii, Canada, or any offshore delivery.	As is the case in the 48 contiguous United States, freight is the responsibility of the SOURCEWELL member. Additional freight charges will be evaluated by PlayPower's shipping department and the best available rate and service will be passed on to the Sourcewell member during the quote process.	*
60	Describe any unique distribution and/or delivery methods or options offered in your proposal.	Where it makes sense, we use Intermodal freight transport which involves the transportation of freight in an intermodal container or vehicle, using multiple modes of transportation (rail, truck, ship), without any handling of the freight itself when changing modes. The method reduces cargo handling, and so improves security, reduces damage and loss, and allows freight to be transported faster. Reduced costs over road trucking is the key benefit.	*

Table 12: Pricing Offered

Line Item	The Pricing Offered in this Proposal is: *	Comments	
61	c. better than the Proposer typically offers to GPOs, cooperative procurement organizations, or state purchasing departments.		

Table 13: Audit and Administrative Fee

Line Item	Question	Response *	
62	Specifically describe any self-audit process or program that you plan to employ to verify compliance with your proposed Contract with Sourcewell. This process includes ensuring that Sourcewell participating entities obtain the proper pricing, that the Vendor reports all sales under the Contract each quarter, and that the Vendor remits the proper administrative fee to Sourcewell.	• PlayPower's order entry system has required point and click requirements as it relates to contracts. When an order is entered, the system literally prompts the user with the question "Is this a Sourcewell project?" and the user is required to answer YES or NO to proceed. The order entry system also checks for minimum discount compliance. • All Sourcewell orders are also reviewed manually for compliance to ensure minimum Sourcewell pricing discounts and are entered with a Sourcewell code to ensure proper reporting and administrative fee. • In addition, management reviews total amount of Sourcewell sales for accuracy and evaluates representatives' performance selling the Sourcewell contract on an annual basis. • Sourcewell sales tracking is included in PlayPower's corporate budgeting process.	*
63	Identify a proposed administrative fee that you will pay to Sourcewell for facilitating, managing, and promoting the Sourcewell Contract in the event that you are awarded a Contract. This fee is typically calculated as a percentage of Vendor's sales under the Contract or as a per-unit fee; it is not a line-item addition to the Member's cost of goods. (See the RFP and template Contract for additional details.)	We propose a 1% administrative fee for all PlayPower Equipment sold. This is calculated at LIST PRICES and not discounted net sales. In addition, we propose a 1% administrative fee for all open market/turnkey solution products, work and services billed and provided to SOURCEWELL members directly from PlayPower or through our independent representative/distributor/dealer network.	*

Table 14A: Depth and Breadth of Offered Equipment Products and Services

Line Item	Question	Response *	
64	Provide a detailed description of the equipment, products, and services that you are offering in your proposal.	• Playground Equipment • Shade – freestanding and playground equipment integrated • Surfacing – unitary, loose fill, tile • Docking Systems – boat & PWC lifts, swim platforms • Indoor contained play systems	*
65	Within this RFP category there may be subcategories of solutions. List subcategory titles that best describe your products and services.	• Custom Play Equipment • ADA/Inclusive Playground Equipment • Rope Play • Nature Play • Play Sculptures • Musical Play • Early Childhood Play Equipment • Park Benches • Tables • Litter Receptacles • Bollards • Planters • Grills • Adult & Youth Outdoor Fitness Equipment • Sports Equipment • Surfacing – unitary, loose fill, tile • Slides • Sports Courts • Modular Docking Systems • Boat Lifts • PWC Lifts • Kayak & Canoe ADA Accessible Launches • Access Walkways & Floats • Habitat Observation Platforms • Waterway Work Platforms • Mining Platforms • Wetlands Walking Trails • Fishing Piers • Swimming Platforms • Campsite Platforms • Specialty Equipment • ADA Accessible Ramps • Concrete Curbing • Sidewalks • Site Inspections • Equipment Installation & All Corresponding Site Work	*

Table 14B: Depth and Breadth of Offered Equipment Products and Services

Indicate below if the listed types or classes of equipment, products, and services are offered within your proposal. Provide additional comments in the text box provided, as necessary.

Line Item	Category or Type	Offered *	Comments	
66	Playground equipment, site furnishings, site amenities, and accessories.	(•) Yes ( ) No	Little Tikes, Miracle Recreation and Playworld deliver innovative outdoor playground solutions for all ages and abilities. Wabash Valley offers site amenities that add functional and beautiful accessories to any outdoor space, while USA Shade provides fabric shade structures which is used over playground equipment or independently. Wabash Valley provides solutions for outdoor furniture.	*
67	Water play and aquatic recreational structures and equipment.	(•) Yes ( ) No	EZ Dock is a premium waterfront life solutions provider with easy to configure floating docks, ports, launches walkways and accessories	*
68	Playground surfacing and fall protection, and water play and aquatic recreational surfacing.	(•) Yes ( ) No	No Fault is the premiere supplier of poured-in-place, rubber safety surfaces for playgrounds, splash pads, pool decks, sports fields, walking/jogging tracks and much more.	*
69	Services related to the solutions above.	(•) Yes ( ) No	Our independent rep agencies offer a wide variety of services which include, installation, site prep, removal of old equipment, planning and design services, plus much more. These related services offer a turn-key solution to all Sourcewell customers	*

Table 15: Industry Specific Questions

Line Item	Question	Response *	
70	If you are awarded a contract, provide a few examples of internal metrics that will be tracked to measure whether you are having success with the contract.	Quarterly reporting will offer a precise measure of our success with the Sourcewell contract	*
71	Describe how your offering addresses the needs of user's safety, well-being, and range or level of accessibility?	Our employees, sales representatives, and trained installers take great pride in our commitment to safety in every aspect of designing, manufacturing and installing playground equipment. In the interest of playground safety, IPEMA provides a third-party Certification Service whereby a designated independent laboratory validates a participant's certification of conformance to ASTM Fl487, Standard Consumer Safety Performance Specification for Playground Equipment for Public Use.	*
72	Describe how your offering addresses the user's desire to customize the offering (e.g. themes, etc.).	All of PlayPower's brands have the option for customization. Our playground engineers are able to design and customize to just about any imagination.	*
73	Identify any certification(s) that your business or the products included in your proposal have attained or received.	PlayPower meets ISO 9001, ISO 14001 standards. In addition, we are committed to provide products that meet or exceed safety performance specifications established by ASTM International, CPSC, CSA and EN standards.	*

Table 16: Exceptions to Terms, Conditions, or Specifications Form

Line Item 74. **NOTICE**: To identify any exception, or to request any modification, to the Sourcewell template Contract terms, conditions, or specifications, a Proposer must submit the exception or requested modification on the **Exceptions to Terms, Conditions, or Specifications Form** immediately below. The contract section, the specific text addressed by the exception or requested modification, and the proposed modification must be identified in detail. Proposer's exceptions and proposed modifications are subject to review and approval of Sourcewell and will not automatically be included in the contract.

Contract Section	Term, Condition, or Specification	Exception or Proposed Modification	

PROPOSER AFFIDAVIT AND ASSURANCE OF COMPLIANCE

I certify that I am the authorized representative of the Proposer submitting the foregoing Proposal with the legal authority to bind the Proposer to this Affidavit and Assurance of Compliance:

1. The Proposer is submitting this Proposal under its full and complete legal name, and the Proposer legally exists in good standing in the jurisdiction of its residence.

2. The Proposer warrants that the information provided in this Proposal is true, correct, and reliable for purposes of evaluation for contract award.

3. The Proposer, including any person assisting with the creation of this Proposal, has arrived at this Proposal independently and the Proposal has been created without colluding with any other person, company, or parties that have or will submit a proposal under this solicitation; and the Proposal has in all respects been created fairly without any fraud or dishonesty. The Proposer has not directly or indirectly entered into any agreement or arrangement with any person or business in an effort to influence any part of this solicitation or operations of a resulting contract; and the Proposer has not taken any action in restraint of free trade or competitiveness in connection with this solicitation. Additionally, if Proposer has worked with a consultant on the Proposal, the consultant (an individual or a company) has not assisted any other entity that has submitted or will submit a proposal for this solicitation.

4. To the best of its knowledge and belief, and except as otherwise disclosed in the Proposal, there are no relevant facts or circumstances which could give rise to an organizational conflict of interest. An organizational conflict of interest exists when a vendor has an unfair competitive advantage or the vendor’s objectivity in performing the contract is, or might be, impaired.

5. The contents of the Proposal have not been communicated by the Proposer or its employees or agents to any person not an employee or legally authorized agent of the Proposer and will not be communicated to any such persons prior to Due Date of this solicitation.

6. If awarded a contract, the Proposer will provide to Sourcewell Participating Entities the equipment, products, and services in accordance with the terms, conditions, and scope of a resulting contract.

7. The Proposer possesses, or will possess before delivering any equipment, products, or services, all applicable licenses or certifications necessary to deliver such equipment, products, or services under any resulting contract.

8. The Proposer agrees to deliver equipment, products, and services through valid contracts, purchase orders, or means that are acceptable to Sourcewell Members. Unless otherwise agreed to, the Proposer must provide only new and first-quality products and related services to Sourcewell Members under an awarded Contract.

9. The Proposer will comply with all applicable provisions of federal, state, and local laws, regulations, rules, and orders.

10. The Proposer understands that Sourcewell will reject RFP proposals that are marked "confidential" (or "nonpublic," etc.), either substantially or in their entirety. Under Minnesota Statutes Section 13.591, subdivision 4, all proposals are considered nonpublic data until the evaluation is complete and a Contract is awarded. At that point, proposals become public data. Minnesota Statutes Section 13.37 permits only certain narrowly defined data to be considered a "trade secret," and thus nonpublic data under Minnesota's Data Practices Act.

11. Proposer its employees, agents, and subcontractors are not:

    a. Included on the “Specially Designated Nationals and Blocked Persons” list maintained by the Office of Foreign Assets Control of the United States Department of the Treasury found at: https://www.treasury.gov/ofac/downloads/sdnlist.pdf;

    b. Included on the government-wide exclusions lists in the United States System for Award Management found at: https://sam.gov/SAM/; or

    c. Presently debarred, suspended, proposed for debarment, declared ineligible, or voluntarily excluded from programs operated

by the State of Minnesota; the United States federal government or the Canadian government, as applicable; or any Participating Entity. Vendor certifies and warrants that neither it nor its principals have been convicted of a criminal offense related to the subject matter of this solicitation.

☑ By checking this box I acknowledge that I am bound by the terms of the Proposer's Affidavit, have the legal authority to submit this Proposal on behalf of the Proposer, and that this electronic acknowledgment has the same legal effect, validity, and enforceability as if I had hand signed the Proposal. This signature will not be denied such legal effect, validity, or enforceability solely because an electronic signature or electronic record was used in its formation. - Christine Stepp, Sales, Marketing and Contract Administrator, PlayPower, Inc.

The Proposer declares that there is an actual or potential Conflict of Interest relating to the preparation of its submission, and/or the Proposer foresees an actual or potential Conflict of Interest in performing the contractual obligations contemplated in the bid.

○ **Yes** ◉ **No**

The Bidder acknowledges and agrees that the addendum/addenda below form part of the Bid Document.

Check the box in the column "**I have reviewed this addendum**" below to acknowledge each of the addenda.

File Name	I have reviewed the below addendum and attachments (if applicable)	Pages
Addendum 6_Playground_Water_Play_Equipment_RFP_010521 Tue December 22 2020 03:29 PM	☑	1
Addendum 5_Playground_Water_Play_Equipment_RFP_010521 Fri December 18 2020 04:15 PM	☑	1
Addendum 4_Playground_Water_Play_Equipment_RFP_010521 Mon December 7 2020 07:55 AM	☑	1
Addendum 3_Playground_Water_Play_Equipment_RFP_010521 Thu November 19 2020 08:52 AM	☑	1
Addendum 2_Playground_Water_Play_Equipment_RFP_010521 Fri November 13 2020 09:09 AM	☑	2
Addendum 1_Playground_Water_Play_Equipment_RFP_010521 Thu November 12 2020 10:53 AM	☑	2

CONTRACT EXTENSION

Contract Number: #010521-LTS

Sourcewell, 202 12th Street Northeast, P.O. Box 219, Staples, MN 56479 (Sourcewell) and PlayPower, Inc. (Vendor) 11515 Vanstory Drive, Huntersville, NC 28078 have entered into Contract #010521-LTS for the procurement of Playground and Water Play Equipment with Related Accessories and Services. The Contract has an expiration date of February 17, 2025, but the parties may extend the Contract by mutual consent.

Sourcewell and Vendor acknowledge that extending the Contract benefits the Vendor, Sourcewell and Sourcewell's Members. Vendor and Sourcewell agree to extend the Contract listed above for an additional period, with a new Contract expiration date of February 17, 2026. All other terms and conditions of the Contract remain in full force and effect.

Sourcewell

DocuSigned by:
Jeremy Schwartz
C0FD2A139D06489...

By: _____

Jeremy Schwartz

Title: Chief Procurement Officer

Date: 9/23/2023 | 10:52 AM CDT

PlayPower, Inc.

DocuSigned by:
W. Todd Brinker
B286C633F68749C...

By: _____

W. Todd Brinker

Title:

Date: 9/25/2023 | 4:14 PM CDT

Miracle Recreation Representative Listing
United States and Canada

MIRACLE RECREATION EQUIPMENT COMPANY LINK

2024 MIRACLE CATALOG LINK

WHY CHOOSE MIRACLE RECREATION VIDEO - SHAPING THE FUTURE OF PLAY

REP ORGANIZATIONS	TERRITORIES SERVICED	REP PRINCIPLE	MAILING ADDRESS	PHONE #	FAX #	E-MAIL ADDRESS	COMPANY WEBSITE
ASH RECREATION & DESIGN	AR; OK	Brian Ash	931 Monterey Court Monett, MO 65708	800-933-6484 417-393-5788 cell	N/A	brian@ashrecreation.com	https://www.miracle-recreation.com/
BOLAND RECREATION, INC.	IA , WI	Mark Boland	2347 Oak Park Rd. Marshalltown, Ia. 50158	641-752-7589 641-751-5338 cell	641-752-6604	iowaparkplace@mchsi.com	http://www.bolandrecreation.com/
CHURCHICH RECREATION & DESIGN (CRD OF HILTON HEAD)	SC; S. NC	Jeff Churchich	20 Towne Dr., PMB 186 Bluffton, SC 29910	843-757-3156 843-368-8170 cell	843-757-3150	jeff@churchichrecreation.com	https://churchichrecreation.com/
CHURCHICH RECREATION, LLC	CO; E WY; NE,	Kit Steven	PO Box 263 Alamo, CA 94507	510-893-2162 510-295-9507 cell	510-893-2163	kit@miracleplaygroup.com	https://www.miracleplaygroup.com/
CREATIVE RECREATION, LLC	CT; RI; S. E. MA	John Hollerbach	PO Box 330235 W Hartford, CT 06133-0235	860-953-5336	860-953-5337	john@creativerec.com	https://www.creativerec.com/
CUSTOM PLAY SYSTEMS, INC.	KS; W. MO	Greg Stein	5901 NE Diamond Circle Lee's Summit, MO 64064	816-795-7795	816-350-0080	gstein@customplaysystems.com	https://www.customplaysystems.com/
DENZAK RECREATIONAL DESIGN AND SUPPLY	W. NY	Joe Denzak	PO Box 15517 Syracuse, NY 13215	315-492-2631	315-492-2633	drecreat@twcny.rr.com	https://www.denzakrec.com/
GARRETT & COMPANY, INC	ID; UT; W. WY, MT	Vern Garrett	PO Box 57426 Murray, UT 84157	801-265-8443 801-232-4576 cell	801-263-1254	vern@garrettandcompany.com	https://garrettandcompany.com/
HASLEY RECREATION, INC	AL; GA	Eric Hasley	P.O. Box 489 Flowery Branch, GA 30542	770-965-4042	770-936-1970	ehasley@hasley-recreation.com	https://hasley-recreation.com/
HUTCHINSON RECREATION & DESIGN	E. MO; S. IL	Brad & Curt Hutchinson		314-436-5000	636-528-8413	brad@hutchinson-recreation.com curt@hutchinson-recreation.com	https://www.hutchinson-recreation.com/
MIRACLE RECREATION - REGIONAL SALES DIRECTOR	MS	Anthony Cordova	878 E Highway 60 Monett, MO 65708	801-674-0464	N/A	anthony.cordova@playpower.com	https://www.miracle-recreation.com/
KINCADE RECREATION	LA	Tracey Kincade	PO Box 1762 Livingston, TX 77351	936-328-9733 936-328-9733 cell	N/A	kincaderecreation@eastex.net	http://kincaderecreation.net/
LIBERTY PARKS & PLAYGROUNDS	DE; NJ	Joel Lyons	P.O. Box 53 Stratford, NJ 08084	877-808-1583 856-264-4008	888-324-3929	joel@lyonsrecreation.com	https://www.lyonsrecreation.com/
LYONS RECREATION	E. PA	Joel Lyons	P.O. Box 53 Stratford, NJ 08084	877-808-1583 856-264-4008	888-324-3929	joel@lyonsrecreation.com	https://www.lyonsrecreation.com/
MAINE RECREATION & DESIGN	ME	Eric Welzel	347 Lunt Rd. Brunswick, ME 04011	207-729-9368 207-751-4323 cell	N/A	eric@maine-playgrounds.com	https://www.maine-playgrounds.com/
MAY RECREATION EQUIPMENT & DESIGN	S.E. TX	Randy May	3 Sunspree Place The Woodlands, TX 77382	281-363-1908 800-964-6301	281-310-8812	randy@mayrecreation.com	https://mayrecreation.com/
METRO RECREATION	District of Columbia; MD; WV	Michael Slifer	4907 Camden Place N Jefferson, MD 21755	240-409-2870	240-490-5162	mike@metrorecreation.com	https://metrorecreation.com/
MILLER RECREATION EQUIPMENT & DESIGN	W. & C. FL	Joe & Susan Miller	2017 91st Street N.W. Bradenton, FL 34209	941-792-4580	941-794-2909	mrecfla@tampabay.rr.com	https://www.millerrecreation.com/

MIRACLE OF KY & TN	KY; TN	Tami Phillips	931 Commerce Drive Leitchfield, KY 42754	270-230-0221	270-230-0210	tami@miraclekytn.com	https://miraclekytn.com/
MIRACLE OF SOUTH FLORIDA	S. FL	Connie Brown	14451 Lexington Place Davie, FL 33325	954-520-4523 cell	954-473-1964	connieb@miracleofsouthflorida.com	https://www.facebook.com/people/Miracle-of-South-Florida/100057472839055/
Miracle Playgrounds of Indiana	IN	Megan Miller	PO Box 4045 Lawrenceburg, IN 47025	877-220-6705	N/A	megan@miracleofindiana.com	https://www.miracleindiana.com/
MIRACLE PLAYGROUND SALES, INC.	S. CA	Kelly Spence	9106 Pulsar Ct, Suite C Corona, CA 92883	951-695-4515	877-215-3869	kelly.spence@miracleplayground.com	https://www.miracleplayground.com/
MIRACLE PLAYGROUND SALES OF SOUTHERN CALIFORNIA LLC	S. & C. CA	Robert Fryhoff	9106 Pulsar Ct, Suite C Corona, CA 92883	951-695-4515 714-267-7457 cell	877-215-3869	rfryhoff@miracleplayground.com	https://www.miracleplayground.com/
MIRACLE PLAYGROUND SALES SW	AZ; NV	Monte Corley	9106 Pulsar Ct, Suite C Corona, CA 92883	951-695-4515 602-315-5144 cell	877-215-3869	monte@miracleplayground.com	https://www.miracleplayground.com/
MIRACLE PLAYSYSTEMS INCORPORATED	N. & C. CA , OR , WA	Kit Steven	PO Box 263 Alamo, CA 94507	510-893-2162 510-295-9507 cell	510-893-2163	kit@miracleplaygroup.com	https://www.miracleplaygroup.com/
PARK & RECREATION SUPPLY / TEAM REIL	N. IL	John Cederlund	17421 Marengo Road Union, IL 60180	815-923-2099 815-482-2510 cell	815-923-2204	john@getreil.com	https://getreil.com/
PARK PLACE RECREATION DESIGNS	S. TX	Bob Ahrens	PO Box 18186 San Antonio, TX 78218	210-821-5878 210-416-6482 cell	210-832-0115	bob@miracleparkplace.com	https://miracleparkplace.com/
PETTINELLI & ASSOCIATES, INC	NH; VT	Robert Pettinelli	PO Box 5814 Burlington, VT 05402	802-862-3002	802-862-3112	playgrdbob@aol.com	http://pettinelliandassociates.com/
PETTINELLI RECREATION, INC	S. NY; Long Island NY, NYC	Robert K. Pettinelli, Jr	199 Blessings Road Slingerland, NY 12159	518-461-5917	518-326-9859	robertk@pettinelliandassociates.com	https://pettinellirecreation.com/
PLAYGROUND EQUIPMENT SERVICES	OH	Eric Schmidt	3460 Oakmeadow Lane Cincinnati, OH 45239	513-923-2333	513-923-2444	eric@playgroundequipmentservices.com	https://www.playgroundequipmentservices.com/
REC AND ROLL, LLC	HI	Rory Otto	580 Dillingham Blvd. Honolulu, HI 96817	808-485-8885 808-630-1064 cell	N/A	Rory@nylawn.com	https://www.recandrollhawaii.com/
SITE CONCEPTS	VA; N. NC	Jack Huffman	PO Box 9309 Chesapeake, VA 23321	757-465-5701 757-383-8405 cell	757-465-5739	jack@siteconceptsva.com	http://www.siteconceptsva.com/
SITE SPECIFICS	N, W, C MA	Cindy Maak	PO BOX 325 Rochester, MA 02770	508-763-0207 508-633-0722 cell	508-763-0208	cindy@sitespecifics.net	https://www.sitespecifics.net/
SPORTS AND RECREATION ASSOCIATES, LLC	W. PA	Mark Ford	1950 Shady Plain Road Apollo, PA 15613	724-478-1775	724-478-1785	mford46928@aol.com	http://www.sportsrecassoc.com/
TRUE NORTH RECREATION	N. & Panhandle FL	Rich & Kim Falkowski	500 Alfani St Davenport, FL 33896	407-883-8463	N/A	miracle@truenorthrecreation.com	https://www.miracle-recreation.com/
WEBBER RECREATIONAL DESIGN	MN, ND, SD	Jay Webber	1442 Brooke Court Hastings, MN 55033	651-438-3630 612-581-4704 cell	651-438-3939	jwebber@webberrec.com	https://webberrec.com/
WEBUILDFUN, INC	C. TX, W TX, Tx Panhandle, NM, MI	Vince Allen	PO Box 29 Allen, TX 75013	972-727-0653 214-869-2197 cell	972-396-4994	va@webuildfun.com	https://www.webuildfun.com/

CANADA REP AGENCIES							
CANADIAN RECREATION SOLUTIONS	AB; BC; SK	Robert McCoy	#74, 52328 Hwy 21 Sherwood Park, AB T8B 1J9	780-465-0123	N/A	robert@canadianrecreationsolutions.com	
COASTLINE SPECIALTIES LIMITED	NL	John Pike & Seth Pike	46 Robin Hood Bay Road St. John's, NL A1A 5V3	709-726-9155	N/A	john@coastlinespecialties.ca seth@coastlinespecialties.ca	

PLAYGROUND PLANNERS	E. ON	Maryanne & Shannon Swinimer	14 Laurentide Road Nepan ON K2H 6T5	613-828-5502	N/A	shannon@playgroundplanners.com maryanne@playgroundplanners.com	
CRCS	N. ON & MB	Melissa Sheridan	103 Napa Valley Dr Sudbury, ON P3E 0G8	705-522-5555	N/A	Melissa@crcsrecreation.ca	
KETZA CONSTRUCTION	YT & NT	Eric Brohman	107 Platinum Road Whitehorse, YT Y1A 5M3	647-386-6447	N/A	ebrohman@ketza.ca	
PPLT CANADA	C. ON	Robb Wilson	P. O. Box 125 Paris ON N3L 3E7	519-757-7573	N/A	robb.wilson@playpower.com	
PPLT CANADA	S.W. ON	Loreen Warner	P. O. Box 125 Paris ON N3L 3E7	519-732-0072	N/A	loreen.warner@playpower.com	
PPLT CANADA	W. ON	Steve Howes	P. O. Box 125 Paris ON N3L 3E7	519-770-7717	N/A	steve.howes@playpower.com	
PPLT CANADA	S. & C. ON	Jake Hoogstraten	P. O. Box 125 Paris ON N3L 3E7	519-761-7752	N/A	jake.hoogstraten@playpower.com	
PPLT CANADA	Maritime Provinces; NS; PE; NB	Scott O'Reilly	76 Astour Drive Eastern Passage, NS B3G 1M7	902-471-1415	N/A	scott.oreilly@playpower.com	
TECHSPORT	QC	Casey Cameron	4994 Route 125 Rawdon, Quebec. J0K 1S0	514-796-3222	N/A	casey@techsport.ca	
PPLT CANADA	Any other Eastern territories	Michael Lovering	P. O. Box 125 Paris ON N3L 3E7	519-757-2767	N/A	michael.lovering@playpower.com	
PPLT CANADA	Any other Western territories	Lorraine Friesen	861 Raymer Road, Kelowna, British Columbia, Canada V1W 1J7	250-681-5117	N/A	lorraine.friesen@playpower.com	

State of California

CONTRACT
USER INSTRUCTIONS

****NON-MANDATORY****

SUPPLEMENT 10

CONTRACT NUMBER:	STPD-SW-1311-01
DESCRIPTION:	**RADIO INFRASTRUCTURE/SUBSCRIBER EQUIPMENT**
CONTRACTOR(S):	Motorola Solutions, Inc.
CONTRACT TERM:	Until 05/11/2027
STATE CONTRACT ADMINISTRATOR:	California Department of Technology (CDT) Office of Statewide Technology Procurement (OSTP) cdtstatewides@state.ca.gov

HISTORY:

SUPPLEMENT TEN, EXTENDS THE CONTRACT TERM THROUGH 05/11/2027, REVISES THE FOLLOWING SECTIONS: 1. SCOPE, 3. ADMINISTRATIVE FEES, 4. CONTRACT ADMINISTRATION, 6. CONTRACT ITEMS, 9. PURCHASE ORDER APPROVALS, 10. ORDER LIMITS

SUPPLEMENT NINE, UPDATES SECTION 1 TO ALLOW ORDERING AGENCY CONTRACTS TO EXTEND PAST THE STATEWIDE CONTRACT TERM.

SUPPLEMENT EIGHT, UPDATES SECTION 3. CALIFORNIA DEPARTMENT OF TECHNOLOGY (CDT) OFFICE OF STATEWIDE TECHNOLOGY PROCUREMENT (OSTP) ADMINISTRATIVE FEES

SUPPLEMENT SEVEN ADDS THE AMENDMENT HISTORY TABLE, UPDATES SECTION 2. CONTRACT USAGE AND EXTENDS THE CONTRACT TERM THROUGH 05/11/2024

CONTRACT (Non-Mandatory) STPD-SW-1311-01
User Instructions

SUPPLEMENT SIX UPDATES THE CONTRACT TERMS, STATE ADMINISTRATOR NAME, CONTRACTOR'S CONTACT INFORMATION AND CLARIFIED ORDERING INSTRUCTIONS

SUPPLEMENT FIVE CHANGED EMAIL ADDRESS FOR ORDER PLACEMENT

SUPPLEMENT FOUR CHANGED CONTRACT ADMINISTRATOR
FROM: DANH NGO
TO: DAVID F. SANCHEZ
SUPPLEMENT THREE UPDATES THE MANUFACTURER SUGGESTED RETAIL PRICE (MSRP)
SUPPLEMENT TWO CHANGED CONTRACT ADMINISTRATOR

FROM: SUSIE DURKEE
TO: DANH NGO
SUPPLEMENT ONE CORRECTED CONTRACT NUMBER:

FROM: STPD-MA-1311-01 TO STPD-SW-1311-01, AND;
CHANGED MOTOROLA SOLUTIONS, INC CONTACT NAME:
FROM: BRIAN KIBLER TO RANDY BROOKS

Amendment History Table

Amendment#	Date	Description
1	08/21/2015	Changes Agreement Number: From: STPD-MA-1311-01 To: STPD-SW-1311-01
2	09/15/2017	Replaces Manufacturer Suggested Retail Price (MSRP) dated May 12, 2014 with MSRP dated July 1, 2017
3	05/08/2020	Extends the term of the Agreement: From: May 12, 2014 through May 11, 2020 To: May 12, 2014 through May 11, 2021
4	12/11/2020	a. Extends the term of the Agreement: From: May 12, 2014 through May 11, 2021 To: May 12, 2014 through May 11, 2024 b. Modifies the Statement of Work (SOW), Section C. Participating State Agencies
5	04/18/2024	a. Extends the term of the Agreement: From: May 12, 2014 through May 11, 2024 To: May 12, 2014 through May 11, 2027

1. SCOPE

The State's contract with Motorola Solutions Inc. (contractor) provides radio infrastructure/subscriber equipment at contracted pricing to the State of California in accordance with the requirements of Contract # STPD-SW-1311-01. The contractor shall supply the entire portfolio of products as identified in the contract and will be the primary point of contact for data collection, reporting, and distribution of radio infrastructure/subscriber equipment to the State.

The contract term is for three (3) years and is set to expire on May 11, 2027, with no options to extend. The terms, conditions, and prices for the contract extension option shall be by mutual

agreement between the contractor and the State. If a mutual agreement cannot be met the contract may be terminated at the end of the current contract term.

Ordering Agency Agreements executed before the end of this contract term, including any extensions, may continue beyond the expiration date of the Statewide Contract for a period of up to two (2) years.

2. CONTRACT USAGE/RULES

This contract is available for use by State of California departments and any city, county, special district, educational agency, local government body or corporation empowerment to expend public funds. While the State makes this contract available, each local government entity should make its own determination whether the Statewide contract is consistent with their procurement policies and regulations. The use of this Statewide Contract is non-mandatory.

A. State Departments

- Ordering departments must adhere to all applicable State laws, regulations, policies, best practices, and purchasing authority requirements.
- Prior to placing an order, the purchase of all radio and related electronic equipment requires the California Office of Emergency Services (CalOES), Public Safety Communications (PSC) technical review and approval per State Administrative Manual, Chapter 4530. State agencies purchase orders for radio and related electronic equipment must have a PSC stamp and signature affixed. Contractors are required to reject all State purchase orders for radio and related electronic equipment if not stamped and signed by PSC or risk termination of their contract(s). (Please see Item 10. Purchase Order Approvals, for further instruction.)

B. Ordering Agencies

Unless otherwise specified within this document, the term "ordering agencies" will refer to all State departments and local entities identified in Section 3 eligible to utilize this contract. Ordering and/or usage instructions exclusive to State departments shall be identified within each article.

3. ADMINISTRATIVE FEES

The CDT OSTP will bill all Ordering Agencies an administrative fee of 1.05 percent of the total purchase order for use of this statewide contract. The administrative fee should NOT be included in the order total, nor remitted before an invoice is received from CDT OSTP.

The Ordering Agencies may opt to remit the administration fee electronically (ACH/wire transfer) or via U.S. mail. If the Ordering Agencies opts to send remittance electronically, you may send your bank authorization form to TechAccounting@state.ca.gov for CDT Accounting to complete or CDT bank information is available upon request. The CDT mailing address is provided below for remittance via mail.

California Department of Technology
Attn: Accounting Office, 4th Floor, MS Y06
P.O. Box 1810
Rancho Cordova, CA 95741-1810

CONTRACT (Non-Mandatory) STPD-SW-1311-01
User Instructions

4. CONTRACT ADMINISTRATION

Both the State and the Contractor have assigned contract administrators as the single points of contact for problem resolution and related contract issues.

Administrator Information	**OSTP** (State Contract Administrator)	**Motorola** (Contractor)
Contact Name:	CDT Statewide Contract Administrator	Mike Bravo
Telephone:	(916) 460-9812	(951) 201-4599
Email:	CDTStatewides@state.ca.gov	Mike.Bravo@motorolasolutions.com
Address:	Department of Technology P.O. Box 1810, MS Y12 Rancho Cordova, CA 95741	Motorola 10680 Treena St. #200 San Diego, CA 92131

5. PROBLEM RESOLUTION/SUPPLIER PERFORMANCE

Ordering agencies shall inform the State Contract Administrator of any technical or contractual difficulties encountered during contract performance in a timely manner. This includes and is not limited to informal disputes, supplier performance, outstanding deliveries, etc.

6. CONTRACT ITEMS

Core Equipment Line Items, associated ancillary and System Upgrade Agreement (SUA) pricing may be found in either Attachment 7-A, Cost Worksheets, in the Caleprocure website or for latest equipment MSRP and availability contact Motorola at:

Contact Name	Phone	Email
Mike Bravo	(951) 201-4599	Mike.bravo@motorolasolutions.com

In addition, the latest equipment MSRP can also be found in the Electronic Catalog that is located on the Motorola website. The Electronic Catalog, which is used to generate the supplier's quote, is used as the contract pricing document. Use the link below to access the Electronic Catalog.

https://www.motorolasolutions.com/en_us/california.html

The contract pricing is categorized as follows:

Group	Structure
Core Equipment Items	Fixed Contract Pricing Structure
**Onsite Support Cost for Engineer/Technician	Hourly Rate

CONTRACT (Non-Mandatory) STPD-SW-1311-01
User Instructions

**** Onsite Support Cost for Engineer/Technician hourly rate may only be billed in conjunction with the purchase of equipment and must not exceed the price of the equipment**

Ancillary Services	Pricing
**Customized Training	Ordering agencies must contact Motorola for syllabus and price quote
System Upgrade Agreement (SUA)	**Pricing**
**SUA	Ordering agencies must contact Motorola for price quote

****Price quote obtained from Motorola must show a list price with a 35% discount reflecting net cost.**

7. SPECIFICATIONS

All products listed on Attachment 7-A, Cost Worksheets, conform to the following:

- RFP-STPD-SW-1311-01, Addendum 4, dated March 18, 2014
- Exhibit A - Statement of Work, Amendment 6
- Public Safety Radio Goods Special Provisions TD-947 (Rev. 05/11)
- Service Manual Requirements TD-927 (Rev. 11/2013)
- Training Requirements, dated March 6, 2014
- GSPD-401IT (Rev. 11/27/13)

8. PURCHASE EXECUTION

A. State Departments

1) Purchase Documents

Ordering agencies must use the Purchasing Authority Purchase Order (Std. 65) (may be Fi$Cal generated form), Standard Agreement (STD/TECH 213) for purchase execution. An electronic version of the Std. 65 is available at the Office of State Publishing web site: http://www.dgs.ca.gov/pd/Forms.aspx (select Standard Forms).

All Purchasing Authority Purchase Orders (Std. 65) or (STD 213) may contain the following:

- Agency Order Number (Purchase Order Number)
- Ordering Agency Name
- Agency Billing Code
- Purchasing Authority Number
- Statewide Contract Number (STPD-SW-1311-01)
- Supplier Information (Contact Name, Address, Phone Number, E-mail)
- Line Item number
- Quantity
- Unit of Measure
- Commodity Code Number

CONTRACT (Non-Mandatory) STPD-SW-1311-01
User Instructions

- Product Description
- Unit Price
- Extension Price

B. Documentation

All ordering agencies must submit a copy of executed purchase documents (STD 65 or STD/TECH 213) to:

Department of Technology
Statewide Technology Procurement
P.O. Box 1810, MS Y12
Rancho Cordova, CA 95741

9. PURCHASE ORDER APPROVALS

As stated in Item 2. Contract Usage/Rules, the purchase of all radio and related electronic equipment requires the California Office of Emergency Services (CalOES), Public Safety Communications (PSC) technical review and approval per State Administrative Manual, Chapter 4530. State agency purchase orders for radio and related electronic equipment must have a PSC stamp and signature affixed. Purchase Orders that have not been approved by CalOES will be considered void. Contractors are required to reject all State purchase orders for radio and related electronic equipment if not stamped and signed by PSC or risk termination of their contract(s). All radio transmitting devices available on this contract must be authorized by the Federal Communication Commission (FCC) before being put into service. PSC performs all processes required to obtain the licenses for all radio equipment owned or operated by the State.

Service manuals are required when PSC maintains the equipment. State agencies should contact PSC before the purchase order (Std. 65, Purchasing Authority Purchase Order) is issued so the required number of service manuals can be included.

A copy of the purchase order as well as the requestor's name and contact information should be provided to PSC via the contact information below.

PSC Contact Information
Cal/OES, PSC 601 Sequoia Pacific Blvd. Sacramento, CA 95811 ATTN: Technical Unit (916) 894-5041 PSC.Intake@caloes.ca.gov

CONTRACT (Non-Mandatory) STPD-SW-1311-01
User Instructions

10. ORDER LIMITS

There is no order minimum for this Statewide contract. If the STD. 65 Purchasing Order (PO) exceeds $5,000,000.00, State departments are required to:

1. Receive PSC approval per Section 10.
2. Submit the PO to the CDT Statewide Contract Administrator for review and approval
3. Execute the PO after receiving PSC and CDT approval

11. ORDERING PROCEDURE

A. Ordering Method:

Ordering agencies are to submit appropriate purchase documents directly to the Contractor via email at the following:

ORDER PLACEMENT INFORMATION		
Contractor	**Phone**	**Email**
Motorola 10680 Treena St. #200 San Diego, CA 92131	(951) 201-4599	Mike.bravo@motorolasolutions.com

Note: When placing orders, all State departments must conform to proper State procedures.

12. ORDER CONFIRMATION

The Contractor will provide the ordering agencies with an order receipt confirmation containing a unique order number via e-mail within 48 hours of receipt of order.

The confirmation will include:

- Ordering Agency Name
- Unique order number for user reference
- Agency Order Number (Purchase Order Number)
- Purchase Order Total Cost
- Anticipated Delivery Completion Date

13. DELIVERY SCHEDULES

Delivery is to be completed in full within 90 calendar days after receipt of order (ARO). Delivery shall be made to any State department within California and will be specified on individual purchase documents. Delivery for orders placed against the contract resulting from this solicitation shall be coordinated with the Contractor.

14. EMERGENCY/EXPEDITED ORDERS

Not Applicable.

15. FREE ON BOARD (F.O.B.) DESTINATION

All prices are F.O.B. destination; freight prepaid by the contractor, to the ordering organization's receiving point. Responsibility and liability for loss or damage for all orders will remain with the

contractor until final inspection and acceptance, when all responsibility will pass to the ordering organization, except the responsibility for latent defects, fraud, and the warranty obligations.

16. PALLETIZATION

Pallet sizes shall be identified on the ordering agency's purchase document. All pallets shall be of sturdy construction and adequate condition to assure delivery of the goods without damage to the goods or safety hazards.

Exchange pallets may be available; however, the State assumes no responsibility for the availability to exchange pallets. Delivery drivers shall not remove more pallets from the location than delivering at time of delivery.

17. SHIPPED ORDERS

All shipments must comply with General Provisions (rev 11/27/2013) Paragraph 12 entitled "Packing and Shipment".

18. RECALL PROCEDURES

The contractor shall provide recall notification, regardless of level, in writing to the State Contract Administrator and each ordering agency through the most expedient method possible. The notices, at a minimum, shall include a complete product description and/or identification, contract number, delivery order number and disposition instructions. The contractor shall issue replacement of product or credit for any product removed or recalled. Each ordering agency shall have the option of accepting either replacement product or credit in exchange for recalled/removed products.

19. TECHNOLOGY REFRESH

The State expects to update the established common configurations for the contract items as technology changes. This is estimated to take place approximately every twelve (12) months.

20. INVOICING

Ordering agencies may require separate invoicing, as specified by each ordering organization. Invoices will contain the following information:

- Contractor's name, address and telephone number
- Agreement Number (STPD-SW-1311-01)
- Agency Order Number (Purchase Order Number)
- Line Item Number
- Commodity code number
- Quantity purchased
- Contract Unit Price and extension
- State sales and/or use tax
- Prompt payment discounts/cash discounts, if applicable
- Totals for each order

21. PAYMENT

Payment terms for this contract are net forty-five (45) days. Payment will be made in accordance with the provisions of the California Prompt Payment Act, Government Code Section 927, et seq. Unless expressly exempted by statute, the Act requires State departments to pay properly

CONTRACT (Non-Mandatory) STPD-SW-1311-01
User Instructions

submitted, undisputed invoices not more than forty- five (45) days after the date of acceptance of goods, performance of services, or receipt of an undisputed invoice, whichever is later.

22. PAYEE DATA RECORD

Each State accounting office must have a copy of the Payee Data Record (Std. 204) in order to process payments. State departments should forward a copy of the Std. 204 to their accounting office(s). Without Std. 204, payment may be unnecessarily delayed. State departments should contact the contractor for copies of the Payee Data Record.

23. CALIFORNIA SELLER'S PERMIT

The California seller permit number for the contractor(s) is listed below. State departments can verify that permits are currently valid at the following website: www.cdtfa.ca.gov. State departments must adhere to the file documentation required identified in the State Contract Manual, as applicable.

Contractor Name	Seller Permit #
Motorola Solutions, Inc.	30-616008

24. RECYCLED CONTENT

There is no recycled content for this contract.

25. SMALL BUSINESS/DISABLED VETERAN BUSINESS ENTERPRISE PARTICIPATION

There is no small business (SB) or disabled veteran business enterprise (DVBE) participation for this contract.

26. ATTACHMENTS

Attachment 7- A – Cost Worksheets, dated May 12, 2014
Exhibit A – Statement of Work, dated November 1, 2024
N/A-Manufacturer Suggested Retail Price (MSRP) (Contact Motorola Rep.)
RFP-STPD-MA-1311-01, Addendum 4, dated March 18, 2014
Motorola Response to Technical Requirements, dated March 18, 2014
Attachment 6-B - Public Safety Radio Goods Special Provisions TD-947 (Rev 05/11)
Attachment 6-C - Training Requirements, dated 3/6/14.
Attachment 6-D - Service Manual Requirements TD-927 (Rev. 11/2013)
GPSD-401IT (Rev. 11/27/13)

ROCKLIN
CALIFORNIA

City Council Staff Report

Subject: Intention to Annex The Harper into Community Facilities District No. 1

Date: February 25, 2025

Submitted By: Megan Bressem, Management Analyst
Daniel Choe, Administrative Services Deputy Director

Department: Administrative Services - Finance

Recommendation:
Adopt a Resolution of the City Council of the City of Rocklin of Intention to Annex Territory to Rocklin Community Facilities District No. 1 (Annexation No. 87) and to Authorize the Levy of Special Taxes Therein (The Harper).

Background:
The Harper, Assessor's Parcel Numbers 017-281-016-000, 017-281-024-000, and 017-281-025-000, is an apartment community development property located northwest of the intersection of West Oaks Boulevard and Lonetree Boulevard and south of Atherton Road. The annexation map is included as Attachment 2 for reference. The development of The Harper is conditioned on, among other things, annexation into Community Facilities District (CFD) No. 1. CFD No. 1 provides financing for the operation and maintenance of fire protection and suppression services and ambulance and paramedic services.

The landowner has submitted a petition and waiver letter for CFD No. 1 (Attachment 3), which requests the annexation to occur and waives some of the procedural requirements for processing the annexation. With the petitions and waivers, the City Council may adopt the resolution of intention (Attachment 1) at this meeting, and proceed with the public hearing and election, and order the annexation at its meeting on April 8, 2025.

Fiscal Impact:
There is no direct fiscal impact to the General Fund from the staff recommendation. Annexation into CFD No. 1 would allow special taxes to be levied and collected to pay for services provided to the annexation territory.

ATTACHMENTS:
1. Resolution
2. Annexation Map
3. Waiver of Notice Letter

RESOLUTION NO. 2025-

RESOLUTION OF THE CITY COUNCIL OF THE CITY OF ROCKLIN OF INTENTION TO ANNEX TERRITORY TO ROCKLIN COMMUNITY FACILITIES DISTRICT NO. 1 (ANNEXATION NO. 87) AND TO AUTHORIZE THE LEVY OF SPECIAL TAXES THEREIN (The Harper)

The City Council of the City of Rocklin resolves as follows:

Section 1. The City Council finds that there exists in the City of Rocklin a district known as Rocklin Community Facilities District No. 1 (the "CFD") formed and established pursuant to Chapter 2.5 of Part 1 of Division 2 of Title 5 of the California Government Code (Mello-Roos Community Facilities Act of 1982, Government Code section 53311 et seq. (the "Act")).

Section 2. The City Council further finds that the public convenience and necessity require that certain territory be added to the CFD.

Section 3. The territory included in the existing CFD is as shown on the amended maps thereof filed in Book 1 of Maps of Community Facilities Districts to which maps reference is hereby made. The territory proposed to be annexed to the CFD is as shown on the Annexation Map No. 87 to the CFD on file with the City Clerk, the boundaries of which territory are hereby preliminarily approved and to which map reference is hereby made for further particulars. The City Clerk is hereby directed to cause to be recorded in the office of the Placer County Recorder the Annexation Map No. 87 to the CFD, showing the territory to be annexed, within fifteen days of the date of adopting of this resolution. Said territory is commonly known as The Harper.

Section 4. The public services authorized for the existing CFD are fire protection and suppression services and ambulance and paramedic services. The services to be provided in the territory proposed to be annexed to the CFD are fire protection and suppression services and ambulance and paramedic services as described in section 3 of Resolution No. 86-102 adopted by the Council on May 27, 1986 ("Resolution of Formation"). It is presently intended that the public services shall be shared without preference or priority by the existing territory in the CFD and the territory proposed to be annexed to the CFD.

Section 5. Except where funds are otherwise available, a special tax sufficient to pay for all such services will be annually levied and collected in the same manner as ordinary ad valorem property taxes on each building within the territory proposed to be annexed to the CFD at the following rates:

a) Single family detached - $258.27
b) Condominium - $258.27
c) Multi-family with up to four units - $387.41
d) Multi-family with five or more units - $811.71

e) Commercial - $338.21
f) Light industrial - $405.86

Section 6. Beginning July 1, 2025 and each July 1 thereafter, the maximum annual tax rates assigned to each building category shall be increased to an amount equal to 103% of the amount in effect in the prior year.

Section 7. No alteration in the special tax rate authorized to be levied in the existing CFD shall be made as a result of the proposed annexation.

Section 8. A public hearing on the matter of the proposed annexation to Rocklin Community Facilities District No. 1, and for consideration and final determination of whether the public interest, convenience and necessity require the annexation of territory to the CFD and the levy of special taxes therein, shall be held on April 8, 2025, at 6:00 P.M. in the City of Rocklin Council Chambers, 3970 Rocklin Road, Rocklin, California.

Section 9. The City Clerk is hereby directed to give notice of the hearing in accordance with sections 53339.4, 53322 and 53322.4 of the Act by publication in the Placer Herald once at least seven (7) days prior to the hearing and by first-class mail to each registered voter and each landowner within the territory proposed to be annexed to the CFD at least 15 days before the hearing. The notice shall be substantially in the form specified in section 53339.4 of the Act.

PASSED AND ADOPTED this 25th day of February, 2025, by the following vote:

AYES: Councilmembers:
NOES: Councilmembers:
ABSENT: Councilmembers:
ABSTAIN: Councilmembers:

_____
Jill Gayaldo, Mayor

ATTEST:

_____
Avinta Singh, City Clerk

BOOK___OF COMMUNITY FACILITIES DISTRICT, PAGE___

THE HARPER
ANNEXATION MAP NO. 87 OF
COMMUNITY FACILITIES DISTRICT NO. 1

BEING ALL OF PARCEL "A" AS SHOWN ON THAT CERTAIN MAP FILED FOR RECORD ON AUGUST 28, 2024, IN BOOK 36 OF PARCEL MAPS AT PAGE 122, TOGETHER WITH ALL OF LOT 3 AS SHOWN ON THAT CERTAIN MAP ENTITLED "ROCKLIN CORPORATE CENTER", FILED FOR RECORD ON OCTOBER 1, 2004, IN BOOK Z OF MAPS AT PAGE 90, ALL OF OFFICIAL RECORDS OF PLACER COUNTY

CITY OF ROCKLIN – COUNTY OF PLACER – STATE OF CALIFORNIA
JANUARY, 2025

NOTES

REFERENCE IS HEREBY MADE TO THAT CERTAIN MAP ENTITLED "PROPOSED BOUNDARIES OF COMMUNITY FACILITIES DISTRICT NO.1, CITY OF ROCKLIN, COUNTY OF PLACER, STATE OF CLAIFORNIA" FILED THE 3RD DAY OF APRIL, 1987, AT THE HOUR OF 9:12 A.M. IN BOOK 1 OF MAPS OF ASSESMENT AND COMMUNITY FACILITIES DISTRICT AT PAGE 2, IN THE OFFICE OF THE COUNTY RECORDER OF THE COUNTY PLACER, STATE OF CALIFORNIA, WHICH THIS ANNEXATION MAP AFFECTS.

LEGEND

ANNEXATION BOUNDARY LINE
LOT LINES

ABBREVIATIONS

APN ASSESSOR'S PARCEL NUMBER
M MAPS
PM PARCEL MAP
O.R. OFFICIAL RECORDS
CFD COMMUNITY FACILITIES DISTRICT

CITY COUNCIL'S STATEMENT

I HEREBY CERTIFY THAT THE WITHIN MAP SHOWING PROPOSED BOUNDARIES OF ANNEXATION NO. 87 TO COMMUNITY FACILITIES DISTRICT NO.1, CITY OF ROCKLIN, COUNTY OF PLACER, STATE OF CALIFORNIA, WAS APPROVED BY THE CITY COUNCIL OF THE CITY OF ROCKLIN, AT A MEETING THEREOF, HELD ON THE ___ DAY OF _____ 2025, BY ITS RESOLUTION NO. _____.

AVINTA SINGH
CITY CLERK OF THE CITY OF ROCKLIN

DATE

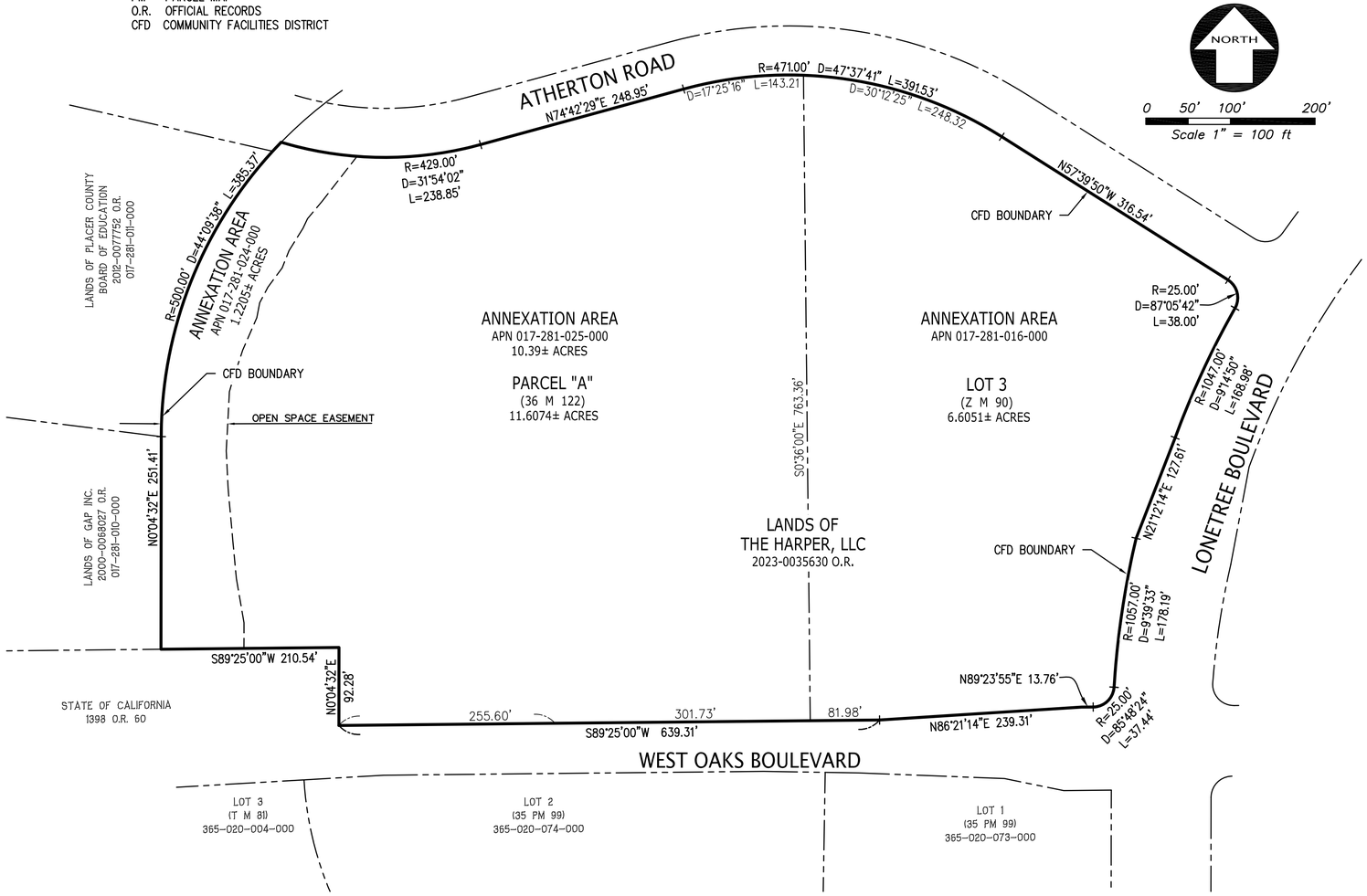

KIER+WRIGHT
2850 Collier Canyon Road
Livermore, CA 94551
Phone: (925) 245-8788
www.kierwright.com

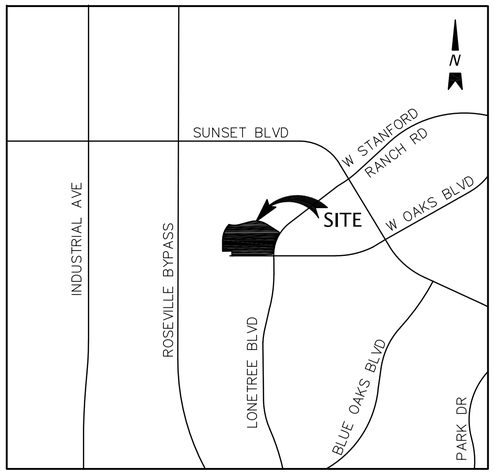

VICINITY MAP
NOT TO SCALE

CITY CLERK'S STATEMENT

FILED IN THE OFFICE OF THE CITY CLERK OF THE CITY OF ROCKLIN, COUNTY OF PLACER, STATE OF CALIFORNIA, THIS_____ DAY OF _____, 2025.

AVINTA SINGH
CITY CLERK OF THE CITY OF ROCKLIN

DATE

RECORDER'S STATEMENT

FILED THIS _____ DAY OF _____, 2025, AT THE HOUR OF _____O'CLOCK _.M. IN BOOK _____ OF MAPS OF ASSESSMENT AND COMMUNITY FACILITIES DISTRICTS, AT PAGE _____, IN THE OFFICE OF THE COUNTY RECORDER IN THE COUNTY OF PLACER, STATE OF CALIFORNIA.

RYAN RONCO
COUNTY RECORDER OF PLACER COUNTY

BY: _____
DEPUTY

FILE NO._____

FEE: _____

ADVANCED BUILDING SOLUTIONS, INC.
DEVELOPMENT & CONSTRUCTION SERVICES

City Council
City of Rocklin
3970 Rocklin Road
Rocklin, CA 95677

Re: Waiver of Notice and Time Requirements in Connection with Special Election for Approval of Special Tax Levy under Mello-Roos Community Facilities Act of 1982
Community Facilities District No. 1 (Annexation No. 87), The Harper

Honorable Members of the Rocklin City Council:

The undersigned is the owner (or duly authorized representative thereof) of all of the real property identified below, and hereby requests that the City of Rocklin (the "City") begin proceedings to annex territory, including the property identified below, to the Rocklin **Community Facilities District No. 1 (Annexation No. 87)** (the "CFD") pursuant to the Mello-Roos Community Facilities Act of 1982, as amended (Government Code section 53111 et seq.) (the "Act").

The undersigned hereby further requests that you take all steps necessary to complete the annexation to the CFD and to levy a special tax therein for the purpose of providing fire protection and suppression services and ambulance and paramedic services to the real property proposed to be annexed.

The undersigned hereby further requests that the annexation and levy of the special tax proceed as quickly as possible. Being that there are fewer than twelve registered voters residing in the area to be annexed to the CFD, and the undersigned being the only expected qualified elector for the annexation, the undersigned does hereby waive on its behalf the provisions of Government Code section 53326 requiring that the special election concerning the levy of a special tax imposed under the Act be held at least 90 days following the close of the protest hearing applicable to that special tax, and the undersigned does hereby consent to an election concerning the levy of such a special tax prior to expiration of the prescribed 90-day period.

The undersigned hereby waives any other time for and notices of said special election under the Act, and the inclusion of an impartial analysis and arguments and rebuttals in the ballot materials. In furtherance of this waiver, the election may be conducted by mail or hand delivered ballot, to be returned as quickly as possible to the City Clerk of the City, and the results of said election may be canvassed and reported to you as soon as possible.

CORPORATE OFFICE • 855 LAKEVILLE ST. SUITE 200-B • PETALUMA, CA 94952
MAIN (707) 206-4040 • FAX (707) 206-4051

This waiver shall be applicable only to the special election in connection with the annexation of the real property identified below to the Rocklin Community Facilities District No. 1 and the levy of a special tax, and shall not be construed as applicable to any other or unrelated special election.

Submitted herewith is a check for $4,621.00 to be used by the City to pay the costs incurred by the City in the annexation process.

Respectfully submitted as of this 17 day of October, 2024.

The Harper LLC
(name of owner of fee)

By
(authorized representative)

Seth Nobmann
(name of authorized representative)

The property that is the subject of this Petition and owned (not leased or optioned) by the above owner is Placer County Assessor Parcel No.(s) 017-281-024-000, 017-281-025-000 and 017-281-016-000 and the property consists of a total of 18.21 acres.

The address of the above owner for purposes of receiving all notices and ballots is:

855 Lakeville Street, Suite 200
Petaluma, CA 94952

ROCKLIN
CALIFORNIA

City Council Staff Report

Subject: Intention to Annex The Harper into Community Facilities District No. 5

Date: February 25, 2025

Submitted By: Megan Bressem, Management Analyst
Daniel Choe, Administrative Services Deputy Director

Department: Administrative Services - Finance

Recommendation:
Adopt a Resolution of the City Council of the City of Rocklin of Intention to Annex Territory to Rocklin Community Facilities District No. 5 (Annexation No. 74) and to Authorize the Levy of Special Taxes Therein (The Harper).

Background:
The Harper, Assessor's Parcel Numbers 017-281-016-000, 017-281-024-000, and 017-281-025-000, is an apartment community development property located northwest of the intersection of West Oaks Boulevard and Lonetree Boulevard and south of Atherton Road. The annexation map is included as Attachment 3 for reference. The development of The Harper is conditioned on, among other things, annexation into Community Facilities District (CFD) No. 5.

CFD No. 5 finances the operation and maintenance of publicly owned parks, parkways, landscaping and street/parkway lighting. The rate and method of apportionment of the special tax levy to pay for the services provided to the annexation territory is included as Exhibit A to the resolution (Attachment 2).

The landowner has submitted a petition and waiver letter for CFD No. 5 (Attachment 4), which requests the annexation to occur and waives some of the procedural requirements for processing the annexation. With the petitions and waivers, the City Council may adopt the resolution of intention (Attachment 1) at this meeting, and proceed with the public hearing and election, and order the annexation at its meeting on April 8, 2025.

Fiscal Impact:
There is no direct fiscal impact to the General Fund from the staff recommendation. Annexation into CFD No. 5 would allow special taxes to be levied and collected to pay for services provided to the annexation territory.

ATTACHMENTS:

1. Resolution
2. Resolution Exhibit A - Rate and Method of Apportionment
3. Annexation Map
4. Waiver of Notice Letter

RESOLUTION NO. 2025-

RESOLUTION OF THE CITY COUNCIL OF THE CITY OF ROCKLIN OF INTENTION TO ANNEX TERRITORY TO ROCKLIN COMMUNITY FACILITIES DISTRICT NO. 5 (ANNEXATION NO. 74) AND TO AUTHORIZE THE LEVY OF SPECIAL TAXES THEREIN
(The Harper)

The City Council of the City of Rocklin resolves as follows:

Section 1. The City Council finds that there exists in the City of Rocklin a district known as Rocklin Community Facilities District No. 5 (the "CFD") formed and established pursuant to Chapter 2.5 of Part 1 of Division 2 of Title 5 of the California Government Code (Mello-Roos Community Facilities Act of 1982, Government Code section 53311 et seq. (the "Act")).

Section 2. The City Council further finds that the public convenience and necessity require that certain territory be added to the CFD.

Section 3. The territory included in the existing CFD is as shown on the amended maps thereof filed in Book 3 of Maps of Community Facilities Districts to which maps reference is hereby made. The territory proposed to be annexed to the CFD is as shown on the Annexation Map No. 74 to the CFD on file with the City Clerk, the boundaries of which territory are hereby preliminarily approved and to which map reference is hereby made for further particulars. The City Clerk is hereby directed to cause to be recorded in the office of the Placer County Recorder the Annexation Map No. 74 to the CFD, showing the territory to be annexed, within fifteen days of the date of adopting of this resolution. Said territory is commonly known as The Harper.

Section 4. The public services authorized for the existing CFD are operation and maintenance of publicly owned parks, parkways, landscaping and street/parkway lighting. The services to be provided in the territory proposed to be annexed to the CFD are operation and maintenance of publicly owned parks, parkways, landscaping and street/parkway lighting as described in section 3 of Resolution No. 96-255 adopted by the Council on October 8, 1996, ("Resolution of Formation"), together with drainage and waterway maintenance, open spaces and park trail maintenance, roadway maintenance, maintenance of signalized intersections and safety lighting, roadway landscaping and associated signage and infrastructure. It is presently intended that the public services shall be shared without preference or priority by the existing territory in the CFD and the territory proposed to be annexed to the CFD, while the additional services described above shall be provided without preference or priority within the territory proposed to be annexed to the CFD as described herein and to other territory annexed to the CFD in the future, as and to the extent described in any proceedings related thereto.

Section 5. Except where funds are otherwise available, a special tax sufficient to pay for all such services will be annually levied and collected in the same manner as

ordinary ad valorem property taxes within the territory proposed to be annexed to the CFD as set forth in the attached Exhibit A, Rate and Method of Apportionment of Special Tax, incorporated herein by reference. The special tax shall be levied pursuant to the applicable ordinances previously adopted by the Council for the CFD.

Section 6. No alteration in the special tax rate authorized to be levied in the existing CFD shall be made as a result of the proposed annexation.

Section 7. A public hearing on the matter of the proposed annexation to Rocklin Community Facilities District No. 5, and for consideration and final determination of whether the public interest, convenience and necessity require the annexation of territory to the CFD and the levy of special taxes therein, shall be held on April 8, 2025 at 6:00 P.M. in the City of Rocklin Council Chambers, 3970 Rocklin Road, Rocklin, California.

Section 8. The City Clerk is hereby directed to give notice of the hearing in accordance with sections 53339.4, 53322 and 53322.4 of the Act by publication in the Placer Herald once at least seven (7) days prior to the hearing and by first-class mail to each registered voter and each landowner within the territory proposed to be annexed to the CFD at least 15 days before the hearing. The notice shall be substantially in the form specified in section 53339.4 of the Act.

PASSED AND ADOPTED this 25th day of February, 2025, by the following vote:

AYES: Councilmembers:
NOES: Councilmembers:
ABSENT: Councilmembers:
ABSTAIN: Councilmembers:

_____
Jill Gayaldo, Mayor

ATTEST:

_____
Avinta Singh, City Clerk

EXHIBIT A

RATE AND METHOD OF APPORTIONMENT OF SPECIAL TAX COMMUNITY FACILITIES DISTRICT NO. 5 - ANNEXATION NO. 74 (The Harper)

A. Purpose for the Special Tax.

The annual special tax shall be levied by the City on each parcel within the Rocklin Community Facilities District No. 5 – Annexation No. 74 (The Harper) (the "CFD") as shown on the Placer County Assessor's records, based on the apportionment procedure specified herein for the purpose of paying for authorized public services.

B. Determination of Parcels Subject to the Special Tax.

The basis for determining the parcels subject to the special tax will be the equalized property tax roll produced by the County Assessor of Placer County. The following parcels shall be exempt from the special tax:

1. All parcels which are designated to be owned or which are owned by federal, state, the City and local governments or any public agency at the time of the approval of the special tax and all parcels designated in whole as wetlands, and/or open space by the City.

Parcels originally designated for such public uses but which are redesignated or rezoned for residential, commercial, or industrial use in the future, shall become subject to the special tax. Any parcel zoned residential, commercial, or industrial which is rezoned to an excluded category, shall continue to be taxed at up to the maximum annual tax originally assigned to the parcel.

C. Definitions.

"Administration Expenses" means the cost associated with the administration of the Community Facilities District. Administration costs may include, but are not limited to the cost of tax collection, legal fees, legal notices, direct labor, indirect cost allocations, and contract services.

"Administrator" means the person or firm designated by the City to administer the special tax according to this rate and method of apportionment of special tax.

"Annual Special Tax Requirement" means the amount necessary each year to pay for the activities of the Facilities District No. 5, Annexation No. 74 (The Harper).

"Annual Special Tax" means the amount of tax levied each year on each parcel.

"CFD" means Rocklin Community Facilities District No. 5.

"City" means the City of Rocklin.

"Commercial Lot" means any Final Lot which is not a Single-Family Lot or Multi-Family Lot.

"Council" means the City Council of the City of Rocklin.

"Equivalent Dwelling Unit (EDU)" is defined as follows:

Single Family Unit	1 EDU
Multi-family Unit	.63 EDU
Commercial Lot (all non-residential)	3 EDU/acre
Undeveloped Property	3 EDU/acre

"Final Lot" means any lot subdivided down to its ultimate size consistent with its zone as approved by the City pursuant to the Subdivision Map Act (California Government Code §66410, et seq.) and for which a building permit may be issued. For all lots exclusive of single family dwelling lots, the lots of a parcel will not become a "Final Lot" until at least one building permit has been applied for and issued for construction of a structure on that parcel.

"Fiscal Year" means July 1 to June 30 of any year.

"Maximum Annual Special Tax" means the maximum special tax that can be levied against a parcel in any year.

"Maximum Annual Tax for Final Lots" means $76.33 per EDU, adjusted annually for inflation by a factor of 4%.

"Maximum Annual Tax for Undeveloped Property" means $228.99 per acre, adjusted annually for inflation by a factor of 4%.

"Multi-Family Lot" means a Final Lot used or designated for use as multi-family housing units.

"Single-Family Lot" means any Final Lot used or designated for use as a single-family unit or duplex.

"Special Tax Requirement" means the amount necessary in any fiscal year to pay for the authorized services set forth in the Resolution of Intention, and to cure any delinquencies in the payment of special taxes levied in prior years or (based on delinquencies in the payment of special taxes which have already taken place) are expected to occur in the fiscal year in which the tax will be collected.

"Undeveloped Property" means all property which is not a final lot.

D. **Calculating the Maximum Annual Special Tax.**

The Maximum Annual Special Tax for each Final Lot and Undeveloped Property shall be calculated as follows:

Step 1 Identify all Final Lots in the CFD and determine if the Final Lot is a single family lot, a Multi-Family Lot or a Commercial Lot.

Step 2
a) For each Single Family Lot identified in Step 1, apply the Maximum Annual Tax for Final Lots.

b) For each Multi-Family Lot identified in Step 1, apply the Maximum Annual Tax for Final Lots, multiplied by .63, and multiplied again by the number of dwelling units approved or built on each multi-family lot.

c) For each Commercial Lot identified in Step 1, multiply the acreage within the Commercial Lot by 3, and multiply the result by the Maximum Annual Tax for Final Lots.

Step 3 Identify all Undeveloped Property by acreage.

Step 4 Apply the Maximum Annual Tax Rate for Undeveloped Property to each acre of undeveloped property identified in Step 3.

E **Changes to the Maximum Annual Tax.**

Beginning July 1, 2025 and each July 1, thereafter, the maximum annual tax shall be increased by 4%.

F. **Apportionment and Levy of Special Tax.**

Commencing with fiscal year 2025/26 and for each following fiscal year, the administrator shall determine the annual special tax requirement for the CFD by applying the following steps. Based on the administrator's determination, the special tax will be levied.

Step 5 Identify the total Special Tax Requirement to be paid in the fiscal year for which the special tax is being calculated.

Step 6 For each Final Lot, determine the number of EDUs for that lot by applying the appropriate land use factor shown in the table above.

Step 7 Add all EDUs determined in Step 6.

Step 8 Divide the total Special Tax Requirement by the total number of EDUs to determine the annual tax per EDU and multiply that amount times the number of EDUs in each Final Lot applying the appropriate land use factor.

Step 9 If the amount calculated in Step 8 is less than or equal to the Maximum Annual Tax for Final Lots, then that amount shall be levied on all Final Lots. **If the amount calculated in Step 8 is more than the maximum annual tax, the maximum annual tax should be levied on all final lots.**

If the total amount of tax available after taxing all Final Lots at the Maximum Annual Tax for Final Lots is less than the Special Tax Requirement, then that difference shall be collected by an assessment against the Undeveloped Property.

Step 10 Subtract the total amount of tax available after taxing all Final Lots at the Maximum Annual Tax for Final Lots from the Special Tax Requirement.

Step 11 Determine the total number of acres of Undeveloped Property.

Step 12 Divide the remaining Special Tax Requirement from Step 10 by the total number of acres of Undeveloped Property to arrive at the annual tax per acre of Undeveloped Property and the levy that amount against each acre of Undeveloped Property, up to the Maximum Annual Tax for Undeveloped Property.

G. **Manner of Collection.**

The special taxes for the CFD shall be collected in the same manner and at the same time as ordinary ad valorem property taxes.

The following parcels, and any subsequent parcels stemming from the following parcels, are included with the Community Facilities District No. 5 – Annexation No. 74 APNs 017-281-016-000, 017-281-024-000, and 017-281-025-000.

BOOK___OF COMMUNITY FACILITIES DISTRICT, PAGE___

THE HARPER
ANNEXATION MAP NO. 74 OF
COMMUNITY FACILITIES DISTRICT NO. 5

BEING ALL OF PARCEL "A" AS SHOWN ON THAT CERTAIN MAP FILED FOR RECORD ON AUGUST 28, 2024, IN BOOK 36 OF PARCEL MAPS AT PAGE 122, TOGETHER WITH ALL OF LOT 3 AS SHOWN ON THAT CERTAIN MAP ENTITLED "ROCKLIN CORPORATE CENTER", FILED FOR RECORD ON OCTOBER 1, 2004, IN BOOK Z OF MAPS AT PAGE 90, ALL OF OFFICIAL RECORDS OF PLACER COUNTY

CITY OF ROCKLIN – COUNTY OF PLACER – STATE OF CALIFORNIA
JANUARY, 2025

KIER+WRIGHT
2850 Collier Canyon Road
Livermore, CA 94551
Phone: (925) 245-8788
www.kierwright.com

NOTES

REFERENCE IS HEREBY MADE TO THAT CERTAIN MAP ENTITLED "PROPOSED BOUNDARIES OF COMMUNITY FACILITIES DISTRICT NO.5, CITY OF ROCKLIN, COUNTY OF PLACER, STATE OF CLAIFORNIA" FILED THE 13TH DAY OF SEPTEMBER, 1996, AT THE HOUR OF 2:06 P.M. IN BOOK 3 OF MAPS OF ASSESMENT AND COMMUNITY FACILITIES DISTRICT, AT PAGE 4, IN THE OFFICE OF THE COUNTY RECORDER OF THE COUNTY PLACER, STATE OF CALIFORNIA, WHICH THIS ANNEXATION MAP AFFECTS.

LEGEND

ANNEXATION BOUNDARY LINE
LOT LINES

ABBREVIATIONS

APN ASSESSOR'S PARCEL NUMBER
M MAPS
PM PARCEL MAP
O.R. OFFICIAL RECORDS
CFD COMMUNITY FACILITIES DISTRICT

CITY COUNCIL'S STATEMENT

I HEREBY CERTIFY THAT THE WITHIN MAP SHOWING PROPOSED BOUNDARIES OF ANNEXATION NO. 74 TO COMMUNITY FACILITIES DISTRICT NO.5, CITY OF ROCKLIN, COUNTY OF PLACER, STATE OF CALIFORNIA, WAS APPROVED BY THE CITY COUNCIL OF THE CITY OF ROCKLIN, AT A MEETING THEREOF, HELD ON THE ___ DAY OF _____ 2025, BY ITS RESOLUTION NO. _____.

AVINTA SINGH
CITY CLERK OF THE CITY OF ROCKLIN

DATE

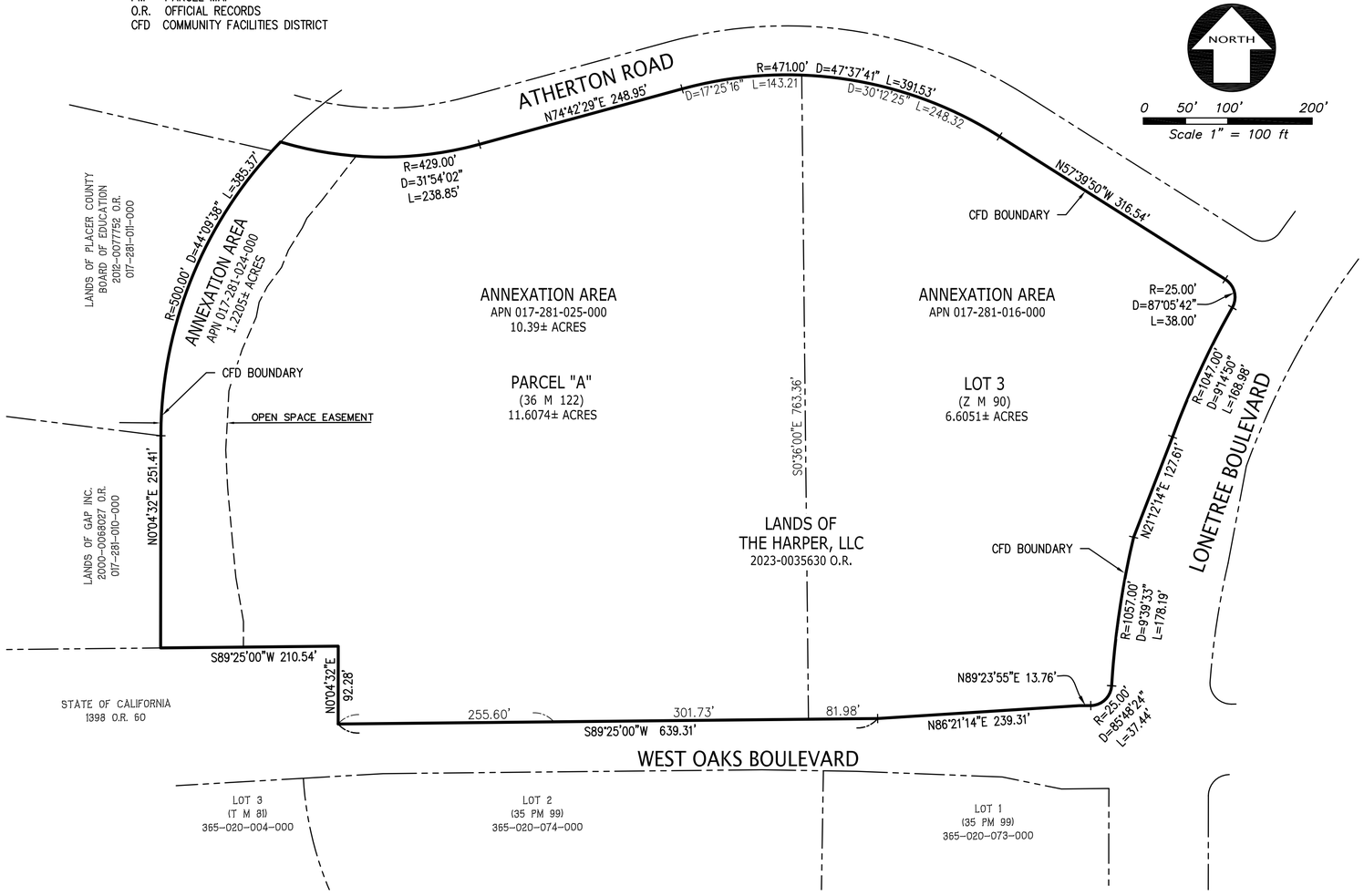

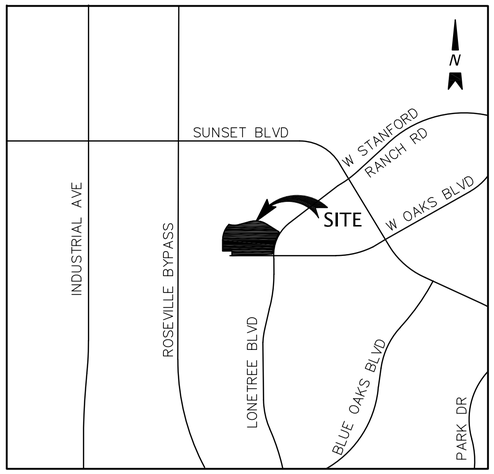

VICINITY MAP
NOT TO SCALE

CITY CLERK'S STATEMENT

FILED IN THE OFFICE OF THE CITY CLERK OF THE CITY OF ROCKLIN, COUNTY OF PLACER, STATE OF CALIFORNIA, THIS_____ DAY OF _____ , 2025.

AVINTA SINGH
CITY CLERK OF THE CITY OF ROCKLIN

DATE

RECORDER'S STATEMENT

FILED THIS _____ DAY OF _____, 2025, AT THE HOUR OF _____O'CLOCK _.M. IN BOOK _____ OF MAPS OF ASSESSMENT AND COMMUNITY FACILITIES DISTRICTS, AT PAGE _____, IN THE OFFICE OF THE COUNTY RECORDER IN THE COUNTY OF PLACER, STATE OF CALIFORNIA.

RYAN RONCO
COUNTY RECORDER OF PLACER COUNTY

BY: _____
DEPUTY

FILE NO._____

FEE: _____

ADVANCED BUILDING SOLUTIONS, INC.
DEVELOPMENT & CONSTRUCTION SERVICES

City Council
City of Rocklin
3970 Rocklin Road
Rocklin, CA 95677

Re: Waiver of Notice and Time Requirements in Connection with Special Election for Approval of Special Tax Levy under Mello-Roos Community Facilities Act of 1982
Community Facilities District No. 5 (Annexation No. 74), The Harper

Honorable Members of the Rocklin City Council:

The undersigned is the owner (or duly authorized representative thereof) of all of the real property identified below, and hereby requests that the City of Rocklin (the "City") begin proceedings to annex territory, including the property identified below, to the Rocklin **Community Facilities District No. 5 (Annexation No. 74)** (the "CFD") pursuant to the Mello-Roos Community Facilities Act of 1982, as amended (Government Code section 53111 et seq.) (the "Act").

The undersigned hereby further requests that you take all steps necessary to complete the annexation to the CFD and to levy a special tax therein for the purpose of providing the operation and maintenance of publicly owned parks, parkways, landscaping, street/parkway lighting, drainage and waterway maintenance, open space and park trail maintenance, roadway maintenance, maintenance of signalized intersections and safety lighting, roadway landscaping and associated signage and infrastructure to the real property proposed to be annexed.

The undersigned hereby further requests that the annexation and levy of the special tax proceed as quickly as possible. Being that there are fewer than twelve registered voters residing in the area to be annexed to the CFD, and the undersigned being the only expected qualified elector for the annexation, the undersigned does hereby waive on its behalf the provisions of Government Code section 53326 requiring that the special election concerning the levy of a special tax imposed under the Act be held at least 90 days following the close of the protest hearing applicable to that special tax, and the undersigned does hereby consent to an election concerning the levy of such a special tax prior to expiration of the prescribed 90-day period.

The undersigned hereby waives any other time for and notices of said special election under the Act, and the inclusion of an impartial analysis and arguments and rebuttals in the ballot materials. In furtherance of this waiver, the election may be conducted by mail or hand delivered ballot, to be returned as quickly as possible to the City Clerk of the City, and the results of said election may be canvassed and reported to you as soon as possible.

CORPORATE OFFICE • 855 LAKEVILLE ST. SUITE 200-B • PETALUMA, CA 94952
MAIN (707) 206-4040 • FAX (707) 206-4051

This waiver shall be applicable only to the special election in connection with the annexation of the real property identified below to the Rocklin Community Facilities District No. 5 and the levy of a special tax, and shall not be construed as applicable to any other or unrelated special election.
Submitted herewith is a check for $4,621.00 to be used by the City to pay the costs incurred by the City in the annexation process.

Respectfully submitted as of this 17 day of October, 2024.

The Harper LLC
(name of owner of fee)

By_____
(authorized representative)

Seth Nobmann
(name of authorized representative)

The property that is the subject of this Petition and owned (not leased or optioned) by the above owner is Placer County Assessor Parcel No.(s) 017-281-024-000, 017-281-025-000, and 017-281-016-000 and the property consists of a total of 18.21 acres.

The address of the above owner for purposes of receiving all notices and ballots is:

855 Lakeville Street, Suite 200
Petaluma, CA 94952

City Council Staff Report

Subject: Ordering the Fiscal Year 2025/26 Engineer's Reports

Date: February 25, 2025

Submitted By: Megan Bressem, Management Analyst
Daniel Choe, Administrative Services Deputy Director

Department: Administrative Services - Finance

Recommendation:

A. Adopt a Resolution of the City Council of the City of Rocklin Ordering the Preparation of the Engineer's Report for Lighting Maintenance District No. 1 for the Fiscal Year 2025/26.
B. Adopt a Resolution of the City Council of the City of Rocklin Ordering the Preparation of the Engineer's Report for Landscape and Lighting Maintenance District No. 2 for the Fiscal Year 2025/26.

Background:

In accordance with the California Streets and Highways Code, Division 15, Part 2, section 22500 et seq. (the Landscaping and Lighting Act of 1972), the City of Rocklin formed two maintenance districts. On August 6, 1979, Lighting Maintenance District No. 1 (LMD No. 1), was formed for the purposes of maintaining street lights and safety lighting located within the district boundaries. A map of LMD No. 1 district boundaries is included as Exhibit A to Resolution A (Attachment 2). On November 19, 1984, Landscape and Lighting Maintenance District No. 2 (LLMD No. 2) was formed for the purposes of maintaining street lights and safety lighting, and the maintenance of roadway landscaping located within the district boundaries. A map of LLMD No. 2 district boundaries is included as Exhibit A to Resolution B (Attachment 4).

The Landscaping and Lighting Act of 1972 (the Act), identifies the process required to annually levy and collect assessments to meet the needs of the maintenance districts. The Act requires an Engineer's Report to be prepared each year assessments are to be levied and collected. The report is to contain plans and specifications regarding improvements to be maintained, an estimated cost for maintaining the improvements, a diagram of the proposed assessment area and an assessment of the estimated costs.

Pursuant to the Act, in order for the City to levy and collect assessments for Fiscal Year (FY) 2025/26 to pay for the cost of maintaining street lights and safety lighting in LMD No. 1 and street lights, safety lighting, and roadway landscaping in LLMD No. 2, it is necessary for the City Council to request the preparation of an Engineer's Report for each maintenance district,

approve or modify and approve the completed Engineer's Reports, declare an intent to levy and collect assessments, and set a public hearing. Approving Resolutions A and B (Attachments 1 and 3) will begin the process to allow the City to levy and collect assessments for FY 2025/26 to pay the maintenance costs for LMD No. 1 and LLMD No. 2.

Fiscal Impact:
There is no direct fiscal impact to the General Fund from the staff recommendation. Preparation of the Engineer's Reports allows assessment revenue to be collected for FY 2025/26 to pay for services provided to the maintenance districts.

ATTACHMENTS:
1. Resolution A - LMD No. 1
2. Resolution A Exhibit A - LMD No. 1 Boundary Map
3. Resolution B - LLMD No. 2
4. Resolution B Exhibit A - LLMD No. 2 Boundary Map

RESOLUTION NO. 2025-

RESOLUTION OF THE CITY COUNCIL OF THE CITY OF ROCKLIN
ORDERING THE PREPARATION OF THE ENGINEER'S REPORT
FOR LIGHTING MAINTENANCE DISTRICT NO. 1
FOR THE FISCAL YEAR 2025/26

WHEREAS, pursuant to Division 15, Part 2, of the Streets and Highways Code of the State of California, being known as the "Landscaping and Lighting Act of 1972" ("the Act"), the City Council of the City of Rocklin has formed a maintenance district that is known and designated as Lighting Maintenance District No. 1 (hereinafter referred to as the "Maintenance District"); and

WHEREAS, at this time, the City Council of the City of Rocklin desires to take proceedings for the annual levy of the assessments as required following the formation of said Maintenance District; and

WHEREAS, these proceedings for the annual levy of assessments shall relate to the fiscal year commencing July 1, 2025 and ending June 30, 2026; and

WHEREAS, there has been submitted, at this time as Exhibit A, to the City Council of the City of Rocklin for its consideration a map showing the boundaries of the area affected by the annual levy of the assessment for the above-referenced fiscal year. No new improvements or substantial changes to existing improvements are proposed; and

WHEREAS, the Act requires a written report consisting of the following:

1. Plans and specifications of the improvements to be maintained;
2. An estimate of the costs for maintaining the improvements for the ensuing fiscal year;
3. A diagram of the area proposed to be assessed; and
4. An assessment of the estimated costs for the maintenance work for said fiscal year.

NOW, THEREFORE, the City Council of the City of Rocklin does resolve as follows:

Section 1. The above recitals are all true and correct and are incorporated herein by reference.

Section 2. A map entitled "Lighting Maintenance District No.1" as submitted to the City Council and attached and incorporated herein as Exhibit A, showing the boundaries of the proposed area to be assessed is hereby approved and adopted by this City Council, and a copy shall be on file in the office of the City Clerk and open for public inspection. The proposed parcels and properties within said area are those to be assessed to pay certain of the costs and expenses for said maintenance work.

Section 3. The proposed maintenance work within the area proposed to be assessed shall be for certain street lighting and traffic signalization improvements, as said maintenance work shall be set in the Engineer's Report to be prepared for this City Council for consideration.

Section 4. That the City Engineer is hereby ordered to prepare a "Report" relating to said annual assessment and levy in accordance with the provisions of Chapter 1, Article 4, commencing with Section 22565, of the Act.

Section 5. Upon completion, said "Report" shall be filed with the City Clerk who shall then submit the same to the City Council for its consideration pursuant to Section 22623 and 22624 of the Act.

PASSED AND ADOPTED this 25th day of February, 2025, by the following vote:

AYES: Councilmembers:
NOES: Councilmembers:
ABSENT: Councilmembers:
ABSTAIN: Councilmembers:

_____
Jill Gayaldo, Mayor

ATTEST:

_____
Avinta Singh, City Clerk

EXHIBIT A

Lighting Maintenance District No. 1 Boundary Map

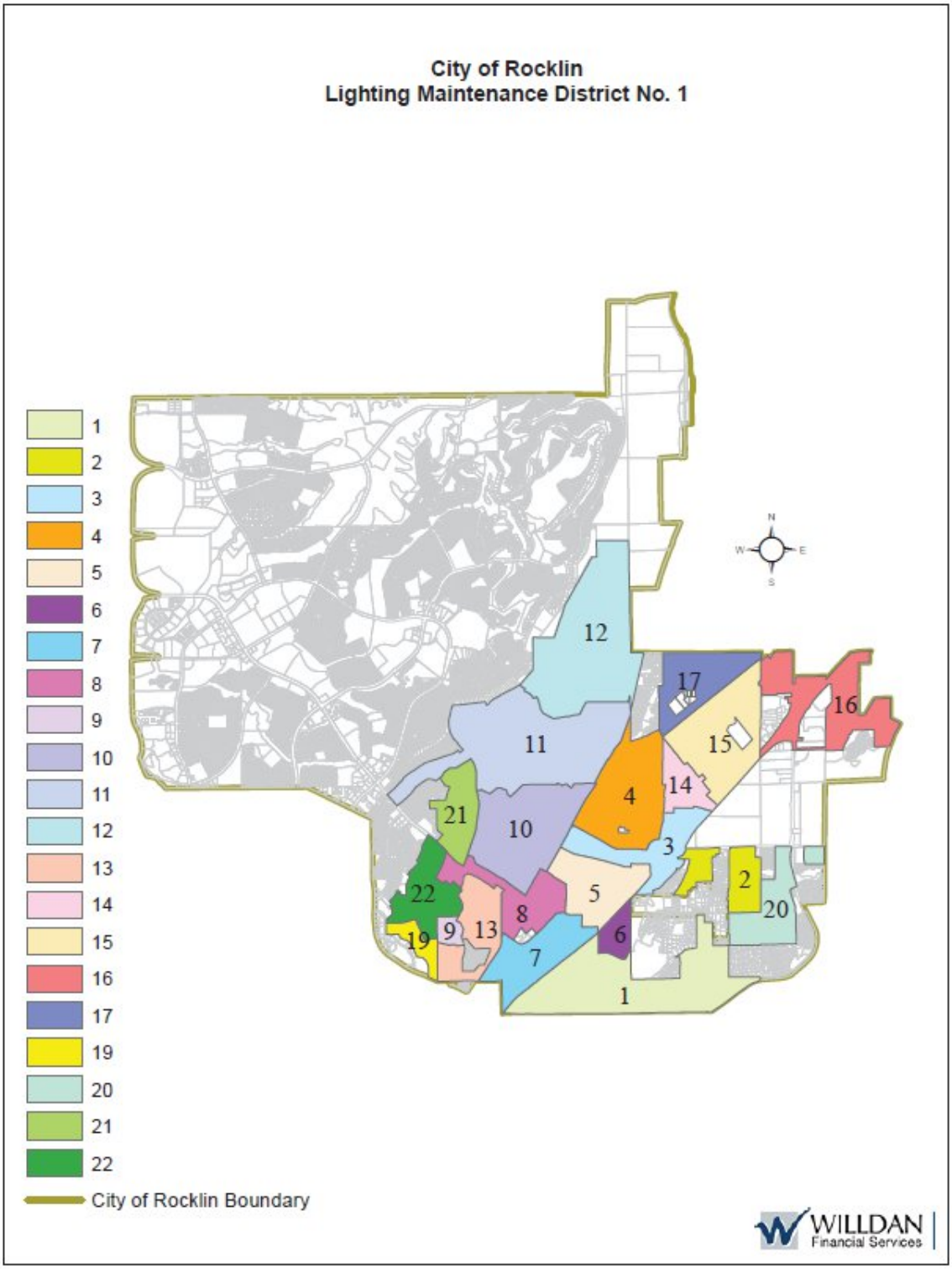

RESOLUTION NO. 2025-

RESOLUTION OF THE CITY COUNCIL OF THE CITY OF ROCKLIN
ORDERING THE PREPARATION OF THE ENGINEER'S REPORT
FOR LANDSCAPE AND LIGHTING MAINTENANCE DISTRICT NO. 2
FOR THE FISCAL YEAR 2025/26

WHEREAS, pursuant to Division 15, Part 2, of the Streets and Highways Code of the State of California, being known as the "Landscaping and Lighting Act of 1972" ("the Act"), the City Council of the City of Rocklin has formed a maintenance district that is known and designated as Landscape and Lighting Maintenance District No. 2 (hereinafter referred to as the "Maintenance District"); and

WHEREAS, at this time, the City Council of the City of Rocklin desires to take proceedings for the annual levy of the assessments as required following the formation of said Maintenance District; and

WHEREAS, these proceedings for the annual levy of assessments shall relate to the fiscal year commencing July 1, 2025 and ending June 30, 2026; and

WHEREAS, there has been submitted, at this time as Exhibit A, to the City Council of the City of Rocklin for its consideration a map showing the boundaries of the area affected by the annual levy of the assessment for the above-referenced fiscal year. No new improvements or substantial changes to existing improvements are proposed; and

WHEREAS, the Act requires a written report consisting of the following:

1. Plans and specifications of the improvements to be maintained;
2. An estimate of the costs for maintaining the improvements for the ensuing fiscal year;
3. A diagram of the area proposed to be assessed; and
4. An assessment of the estimated costs for the maintenance work for said fiscal year.

NOW, THEREFORE, the City Council of the City of Rocklin does resolve as follows:

Section 1. The above recitals are all true and correct and are incorporated herein by reference.

Section 2. A map entitled "Landscape and Lighting Maintenance District No. 2" as submitted to the City Council and attached and incorporated herein as Exhibit A, showing the boundaries of the proposed area to be assessed is hereby approved and adopted by this City Council, and a copy shall be on file in the office of the City Clerk and open for public inspection. The proposed parcels and properties within said area are those to be assessed to pay certain costs and expenses for said maintenance work.

Section 3. The proposed maintenance work within the area proposed to be assessed shall be for certain street lighting improvements and landscape maintenance, as said maintenance work shall be set in the Engineer's Report to be prepared for the City Council for consideration.

Section 4. That the City Engineer is hereby ordered to prepare a "Report" relating to said annual assessment and levy in accordance with the provisions of Chapter 1, Article 4, commencing with Section 22565, of the Act.

Section 5. Upon completion, said "Report" shall be filed with the City Clerk who shall then submit the same to the City Council for its consideration pursuant to Section 22623 and 22624 of the Act.

PASSED AND ADOPTED this 25th day of February, 2025, by the following vote:

AYES: Councilmembers:
NOES: Councilmembers:
ABSENT: Councilmembers:
ABSTAIN: Councilmembers:

_____
Jill Gayaldo, Mayor

ATTEST:

_____
Avinta Singh, City Clerk

EXHIBIT A

Landscape and Lighting Maintenance District No. 2 Boundary Map

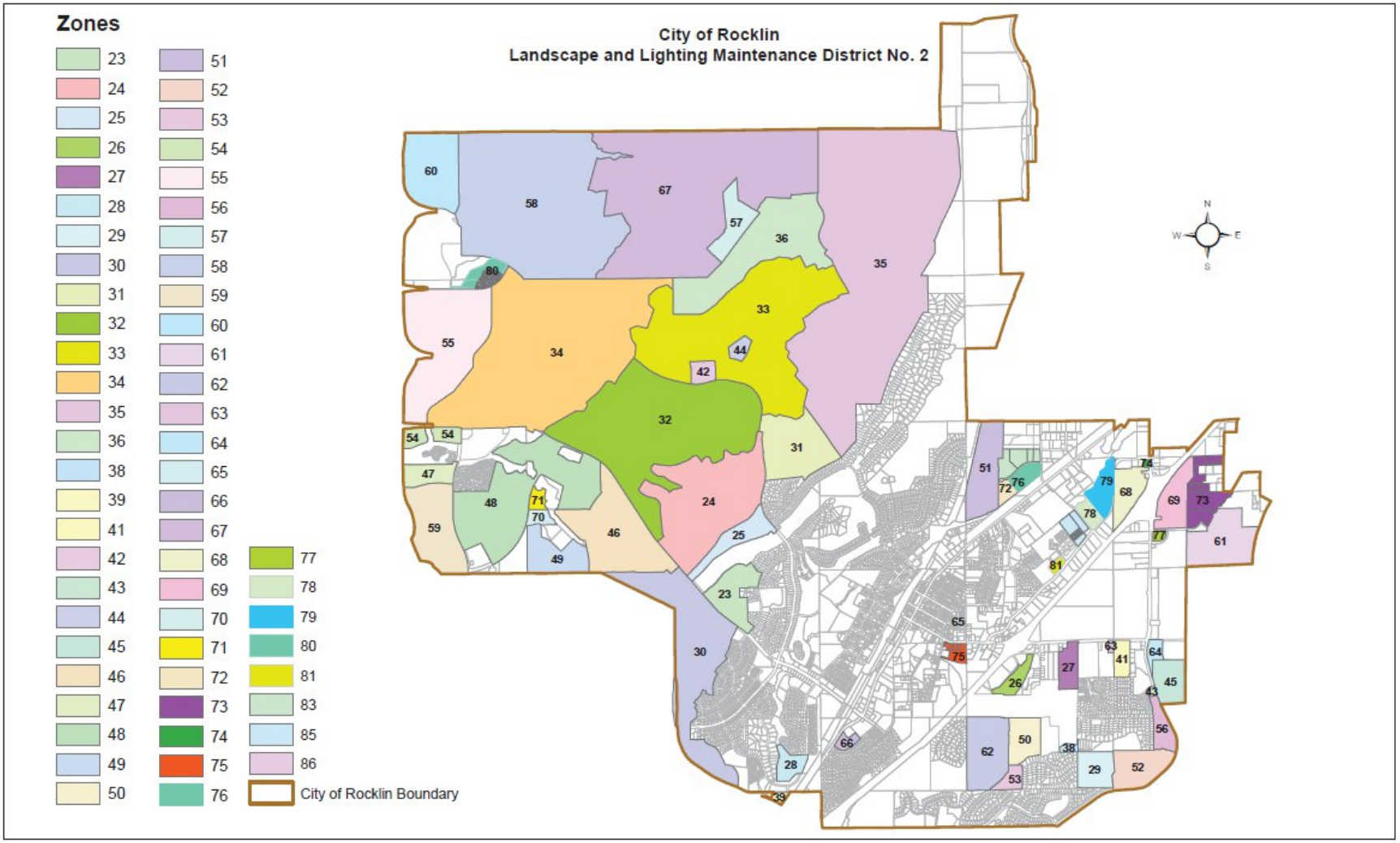

ROCKLIN
CALIFORNIA

City Council Staff Report

Subject: CrowdStrike Endpoint Protection Security Software Contract

Date: February 25, 2025

Submitted By: Ruth Green, IT
Daniel Choe, Administrative Services Deputy Director

Department: Administrative Services - IT

Recommendation:
Adopt a Resolution of the City Council of the City of Rocklin Approving and Authorizing the City Manager to Execute a CrowdStrike Contract from CDW Government LLC.

Background:
Municipalities increasingly rely on technology to safeguard their people, processes, and infrastructure from cyber threats. Endpoint protection is a critical security solution that provides centralized dashboards and administrative functionality to protect devices such as workstations, laptops, servers, mobile devices, and cloud resources from data breaches caused by cyberattacks or human error.

The CrowdStrike Falcon Complete Advanced Endpoint Protection software integrates threat intelligence to offer a comprehensive view of potential attacks, enabling proactive security measures. Its key capabilities include:

- Provides near real-time inventory of endpoints and devices, along with online system application reports, including application version tracking.
- Identifies unauthorized devices connected to the network that are not protected by the designated endpoint solution.
  Continuous Prevention and Detection: Delivers real-time security without requiring constant remote connectivity or manual updates.
- Detects abnormalities using common indicators of compromise in accordance with industry standards.
- Leverages machine learning to identify and prevent exploit attempts, including "zero-day" (previously unknown) malware attacks.
- Provides continuous monitoring for vulnerabilities, threats, and risks, supported by a dedicated team of cybersecurity experts who investigate and remediate threats in real time.

In March 2023, the City of Rocklin implemented CrowdStrike as its primary cybersecurity solution based on industry best practices. Since its implementation, CrowdStrike has proven

to be essential in protecting the City's data and systems from breaches, exploits, cyberattacks, and human error.

The current contract is approaching its expiration, and to ensure continued cybersecurity protection, staff recommends entering into a three-year agreement with CrowdStrike for a total amount of $185,100 (Attachment 2). This agreement will be executed through a cooperative purchasing arrangement via the OMNIA contract, facilitated by the reseller CDW Government LLC (CDW) available at the link: contract details. Staff further recommends authorizing the City Manager to execute the contract.

Per Rocklin Municipal Code, Title 3, Section 3.04.090.C, the City is authorized to participate in cooperative purchasing agreements with other governmental entities without conducting a separate competitive bidding process, provided that the lead agency has already solicited bids and awarded a contract for the desired goods or services. Accordingly, the City of Rocklin will utilize the City of Mesa, AZ OMNIA contract to procure the CrowdStrike Falcon Complete Advanced Endpoint Protection software.

Fiscal Impact:
Sufficient funds are available in the Fiscal Year 2024/25 Operating Budget to cover the cost of the proposed agreement. Funding for subsequent years will be contingent upon budget availability and approval in the applicable fiscal years.

ATTACHMENTS:
1. Resolution
2. Resolution Exhibit A - RFQ
3. CrowdStrike Terms and Conditions

RESOLUTION NO. 2025-

RESOLUTION OF THE CITY COUNCIL OF THE CITY OF ROCKLIN APPROVING AND AUTHORIZING THE CITY MANAGER TO EXECUTE A CROWDSTRIKE CONTRACT FROM CDW GOVERNMENT LLC

WHEREAS, in March 2023, the City of Rocklin implemented CrowdStrike as its primary cybersecurity solution based on industry best practices. Since its implementation, CrowdStrike has proven to be essential in protecting the City's data and systems from breaches, exploits, cyberattacks, and human error; and

WHEREAS, the current contract is approaching its expiration, and to ensure continued cybersecurity protection, staff recommends entering into a three-year agreement with CrowdStrike for a total amount of $185,100 and staff desires to execute the agreement through a cooperative purchasing arrangement via the OMNIA contract, facilitated by the reseller CDW Government LLC (CDW) per Rocklin Municipal Code, Title 3, Section 3.04.090.C; and

WHEREAS, staff further recommends authorizing the City Manager to execute the said agreement.

NOW, THEREFORE, the City Council of the City of Rocklin does resolve as follows:

Section 1. The CrowdStrike Falcon Complete Endpoint Protection software purchase utilizing the City of Mesa, AZ OMNIA contract is hereby approved, in the form attached here to as Exhibit A, and the City Manager is authorized to execute the contract.

PASSED AND ADOPTED this 25th day of February, 2025 by the following vote:

AYES: Councilmembers:
NOES: Councilmembers:
ABSENT: Councilmembers:
ABSTAIN: Councilmembers:

_____
Jill Gayaldo, Mayor

ATTEST:

_____
Avinta Singh, City Clerk

City of Rocklin, California

RFQ #25-02 – CrowdStrike Falcon Complete Endpoint Protection Software

Digital Response

1/24/2025

CDW Government

© CDW Government LLC 2025 | 230 N. Milwaukee Ave. | Vernon Hills, IL 60061

To the extent allowable, all information and documents hereby submitted in response to the Request for Quote ("RFQ") furnished by the City of Rocklin are the Proprietary and Confidential property of CDW Government LLC.

CDW Government

One CDW Way
230 N. Milwaukee Avenue
Vernon Hills, IL 60061
Toll-free: 800.808.4239
Web: cdwg.com

1/24/2025

City of Rocklin
4081 Alvis Court
Rocklin, CA, 95677

RE: CDW Government LLC's Response to the City of Rocklin's RFQ #25-02

Dear Ruth Green,

The City of Rocklin is seeking a reliable and experienced IT partner capable of managing your CrowdStrike Falcon Complete Endpoint Protection Software. Our response demonstrates CDW Government's ability to contribute to the overall success of this initiative.

CDW Government LLC (CDW Government), the wholly-owned subsidiary of CDW LLC, was founded in 1998 to focus on the unique needs and opportunities of our public sector customers. Specific advantages of partnering with us include:

- **Dedicated Account Team Delivers High Quality Service.** Your highly trained and experienced account team, including a dedicated account manager, are responsible for coordinating all your needs and ensuring customer satisfaction.
- **In-House Expertise Provides Easy Access to Knowledge.** You can leverage our valuable presales consulting expertise to assist with developing solutions that provide robust functionality, efficiencies, and cost savings.
- **Investment with Diverse Suppliers Supports Your Requirements and Your Local Economy.** We are committed to fostering inclusivity and drive local economic growth. In 2023, we achieved $3.2B in diverse spend; $1.6B was tied to CDW Government.

As always, we consistently strive to exceed your expectations. Should you have any questions regarding our response, please contact your Account Manager, **Jeff Butchko** at **(847) 371-5500** or **jeffbut@cdwg.com**.

We thank you for the opportunity to participate in this RFQ process and are confident you will find our response advantageous from both a strategic and budgetary standpoint.

Sincerely,

Justin Schwier
Manager, Proposals
CDW Government LLC

It is CDW Government LLC's intent that its proposal response, and CDW Terms & Conditions found at https://www.cdwg.com/content/cdwg/en/terms-conditions/sales-and-service-projects.html, shall provide the definitive terms to govern this submission. CDW Government is open to negotiating the contract terms and conditions with the City of Rocklin.

© CDW Government LLC 2025 | 230 N. Milwaukee Ave. | Vernon Hills, IL 60061

To the extent allowable, all information and documents hereby submitted in response to the Request for Quote ("RFQ") furnished by the City of Rocklin are the Proprietary and Confidential property of CDW Government LLC.

Pricing Offer

Please Note:

- Lines 1-10 are year 1 and will be billed immediately
  - Term Dates: (Mar 19, 2025 - Mar 18, 2026)
- Lines 11-20 will be billed a year out/early 2026
  - Term Dates: (Mar 19, 2026 - Mar 18, 2027)
- Lines 21-30 will be billed 2 years out/early 2027
  - Term Dates: (Mar 19, 2025 - Mar 18, 2028)

© CDW Government LLC 2025 | 230 N. Milwaukee Ave. | Vernon Hills, IL 60061

To the extent allowable, all information and documents hereby submitted in response to the Request for Quote ("RFQ") furnished by the City of Rocklin are the Proprietary and Confidential property of CDW Government LLC.

RFO Title: CrowdStrike Falcon Complete Endpoint Protection Software
RFO Number: RFO-IT-25-02

Attachment A
COST WORKSHEET

CrowdStrike Falcon Complete Endpoint Protection Platform (EPP) with Managed Detection and Response (MDR) Bundle SLP Plus Procurement for a three (3) year term, paid annually. The term of the Agreement is anticipated to cover the period of March 20, 2025, through March 19, 2028 (estimated).

Line #	QTY	SKU/PART #	DESCRIPTION	TAXABLE YES OR NO	EXTENSION YES OR NO	UNIT PRICE Year 1	EXTENDED PRICE Year 1	UNIT PRICE Year 2	EXTENDED PRICE Year 2	UNIT PRICE Year 3	EXTENDED PRICE Year 3
1	325	CS.FCSD.SOLN	CrowdStrike Falcon Complete (Threat Graph Standard, MDR, Breach Warranty Bundle)			PLEASE SEE ATTACHED QUOTE #PGSX684 FOR DETAILS					
2	325	CS.PREVENTB.SOLN	Falcon Prevent Next Generation Antivirus								
3	325	CS.FALCOMPS.SVC	Falcon Complete Subscription								
4	325	CS.INTEL.SOLN	Falcon Intelligence Elite								
5	325	CS.INSIGHTB.SOLN	Falcon Insight - Extended Detection & Response								
6	325	CS.OWB.SVC	Falcon Overwatch always on 24/7 Proactive Threat Hunting								
7	325	CS.DISCB.SOLN	Falcon Discover - Real-time Device Visibility with IT Hygiene								
8	325	CS.TGB.STD	Threat Graph - High-Fidelity Telemetry with Forensics								
9	325	CS.DEVICE.SOLN	Falcon Device Control								
10	325	CS.FIREWALL.SOLN.MSSP	Firewall Management								
11	325	CS.INSIGHTB.SOLN	Falcon Spotlight								
12	100	CS.FCSD.HPS.SOLN	Falcon Complete with Server Threat Graph Standard								
13	100	CS.INSIGHTB.SOLN	Falcon Insight - Extended Detection & Response for Servers								
14	100	CS.PREVENTB.SOLN	Falcon Prevent Next Generation Antivirus for Servers								
15	100	CS.DISCB.SOLN	Falcon Discover - Real-time Device Visibility with IT Hygiene for Servers								
16	100	CS.FALCOMPS.SVC	Falcon Complete Subscription for Servers								
17	100	CS.OWB.SVC	Falcon Overwatch always on 24/7 Proactive Threat Hunting for Servers								
18	100	CS.TGB.STD	Threat Graph - High-Fidelity Telemetry with Forensics for Servers								
19	10	RR.PSO.ENT.NCAP	University LMS (Online Included Free w/Bundle) Subscription 36 Month Term								
20	3	NR.PSO.ENT.CRE	CrowdStrike University Training Credit 24 Credits Annually for 3 Year Term								
21	1	CS.FALCOMPONBC.SOLN	Complimentary Customer Identification (CID)								

RFO Title: CrowdStrike Falcon Complete Endpoint Protection Software
RFO Number: RFO-IT-25-02

22	1	RR.HOS.ENT.ESTL	Falcon Essential Support/Operational Support (Fixed Rate)								
				Subtotal:							
				Tax (if applicable):							
				Grand Total:		**PLEASE SEE ATTACHED QUOTE #PGSX684 FOR DETAILS**					

Company Name: CDW Government LLC

Contact Name: Jeff Butchko

Contact Title: Account Manager

Signature and Date: Justin Schwier - ** Justin Schwier – Manager, Proposals 01/20/2025

**It is CDW Government LLC's intent that its proposal response, and CDW Terms & Conditions found at https://www.cdwg.com/content/cdwg/en/terms-conditions/sales-and-service-projects.html, shall provide the definitive terms to govern this submission. CDW Government is open to negotiating the contract terms and conditions with the City of Rocklin.

FEIN Number: 36-4230110

Company Address: 230 N. Milwaukee Avenue
Vernon Hills, IL 60061

Contact Phone Number: (847) 371-5500
jeffbut@cdwg.com

Thank you for choosing CDW. We have received your quote.

Hardware Software Services IT Solutions Brands Research Hub

QUOTE CONFIRMATION

BRIAN GRAVES,

Thank you for considering CDW•G for your technology needs. The details of your quote are below. **If you are an eProcurement or single sign on customer, please log into your system to access the CDW site.** You can search for your quote to retrieve and transfer back into your system for processing.

For all other customers, click below to convert your quote to an order.

Convert Quote to Order

QUOTE #	QUOTE DATE	QUOTE REFERENCE	CUSTOMER #	GRAND TOTAL
PGSX684	1/23/2025	CROWDSTRIKE RNWL	3354675	$185,100.00

QUOTE DETAILS

ITEM	QTY	CDW#	UNIT PRICE	EXT. PRICE
CrowdStrike Falcon Complete - Flex License - 1 Year - Tier 1 - 1 License Mfg. Part#: FC.CS.SOLN.FLEX.T1.12M Electronic distribution - NO MEDIA Contract: MARKET	460	6777886	$120.00	$55,200.00
CrowdStrike 12-Month Insight - Bundled Software Subscription Mfg. Part#: CS.INSIGHTB.SOLN.T3.12M Electronic distribution - NO MEDIA Contract: MARKET	460	5427068	$0.00	$0.00
CrowdStrike 12-Month Prevent - Bundled Software Subscription Mfg. Part#: CS.PREVENTB.SOLN.T3.12M Electronic distribution - NO MEDIA Contract: MARKET	460	5427072	$0.00	$0.00
CrowdStrike 12-Month Discover - Bundled Software Subscription Mfg. Part#: CS.DISCB.SOLN.T3.12M Electronic distribution - NO MEDIA Contract: MARKET	460	5427074	$0.00	$0.00
CrowdStrike 12-Month Falcon Complete Subscription Mfg. Part#: CS.FALCOMPS.SVC.12M Electronic distribution - NO MEDIA Contract: MARKET	460	5400119	$0.00	$0.00
CrowdStrike 12-Month Overwatch - Bundled Mfg. Part#: CS.OWB.SVC.T3.12M Electronic distribution - NO MEDIA Contract: MARKET	460	5427082	$0.00	$0.00

QUOTE DETAILS (CONT.)				
CrowdStrike 12-Month Threat Graph Standard Software Subscription Mfg. Part#: CS.TG.STD.12M Electronic distribution - NO MEDIA Contract: MARKET	360	5343526	$0.00	$0.00
CrowdStrike 12-Month Server Threat Graph Standard Software Subscription Mfg. Part#: CS.TG.STD.HPS.12M Electronic distribution - NO MEDIA	100	5428944	$0.00	$0.00
University LMS Subscription Customer Access Pass - web-based training Mfg. Part#: RR.PSO.ENT.PASS.12M Electronic distribution - NO MEDIA	2	5744579	$0.00	$0.00
CrowdStrike 12-Month Express Support Mfg. Part#: RR.HOS.ENT.EXPS.12M Electronic distribution - NO MEDIA Contract: MARKET	1	4915958	$6,500.00	$6,500.00
CrowdStrike Falcon Complete - Flex License - 1 Year - Tier 1 - 1 License Mfg. Part#: FC.CS.SOLN.FLEX.T1.12M Electronic distribution - NO MEDIA Contract: MARKET	460	6777886	$120.00	$55,200.00
CrowdStrike 12-Month Insight - Bundled Software Subscription Mfg. Part#: CS.INSIGHTB.SOLN.T3.12M Electronic distribution - NO MEDIA Contract: MARKET	460	5427068	$0.00	$0.00
CrowdStrike 12-Month Prevent - Bundled Software Subscription Mfg. Part#: CS.PREVENTB.SOLN.T3.12M Electronic distribution - NO MEDIA Contract: MARKET	460	5427072	$0.00	$0.00
CrowdStrike 12-Month Discover - Bundled Software Subscription Mfg. Part#: CS.DISCB.SOLN.T3.12M Electronic distribution - NO MEDIA Contract: MARKET	460	5427074	$0.00	$0.00
CrowdStrike 12-Month Falcon Complete Subscription Mfg. Part#: CS.FALCOMPS.SVC.12M Electronic distribution - NO MEDIA Contract: MARKET	460	5400119	$0.00	$0.00
CrowdStrike 12-Month Overwatch - Bundled Mfg. Part#: CS.OWB.SVC.T3.12M Electronic distribution - NO MEDIA Contract: MARKET	460	5427082	$0.00	$0.00
CrowdStrike 12-Month Threat Graph Standard Software Subscription Mfg. Part#: CS.TG.STD.12M	360	5343526	$0.00	$0.00

QUOTE DETAILS (CONT.)

Electronic distribution - NO MEDIA Contract: MARKET				
CrowdStrike 12-Month Server Threat Graph Standard Software Subscription Mfg. Part#: CS.TG.STD.HPS.12M Electronic distribution - NO MEDIA	100	5428944	$0.00	$0.00
University LMS Subscription Customer Access Pass - web-based training Mfg. Part#: RR.PSO.ENT.PASS.12M Electronic distribution - NO MEDIA	2	5744579	$0.00	$0.00
CrowdStrike 12-Month Express Support Mfg. Part#: RR.HOS.ENT.EXPS.12M Electronic distribution - NO MEDIA Contract: MARKET	1	4915958	$6,500.00	$6,500.00
CrowdStrike Falcon Complete - Flex License - 1 Year - Tier 1 - 1 License Mfg. Part#: FC.CS.SOLN.FLEX.T1.12M Electronic distribution - NO MEDIA Contract: MARKET	460	6777886	$120.00	$55,200.00
CrowdStrike 12-Month Insight - Bundled Software Subscription Mfg. Part#: CS.INSIGHTB.SOLN.T3.12M Electronic distribution - NO MEDIA Contract: MARKET	460	5427068	$0.00	$0.00
CrowdStrike 12-Month Prevent - Bundled Software Subscription Mfg. Part#: CS.PREVENTB.SOLN.T3.12M Electronic distribution - NO MEDIA Contract: MARKET	460	5427072	$0.00	$0.00
CrowdStrike 12-Month Discover - Bundled Software Subscription Mfg. Part#: CS.DISCB.SOLN.T3.12M Electronic distribution - NO MEDIA Contract: MARKET	460	5427074	$0.00	$0.00
CrowdStrike 12-Month Falcon Complete Subscription Mfg. Part#: CS.FALCOMPS.SVC.12M Electronic distribution - NO MEDIA Contract: MARKET	460	5400119	$0.00	$0.00
CrowdStrike 12-Month Overwatch - Bundled Mfg. Part#: CS.OWB.SVC.T3.12M Electronic distribution - NO MEDIA Contract: MARKET	460	5427082	$0.00	$0.00
CrowdStrike 12-Month Threat Graph Standard Software Subscription Mfg. Part#: CS.TG.STD.12M Electronic distribution - NO MEDIA Contract: MARKET	360	5343526	$0.00	$0.00

QUOTE DETAILS (CONT.)				
CrowdStrike 12-Month Server Threat Graph Standard Software Subscription Mfg. Part#: CS.TG.STD.HPS.12M Electronic distribution - NO MEDIA Contract: MARKET	100	5428944	$0.00	$0.00
University LMS Subscription Customer Access Pass - web-based training Mfg. Part#: RR.PSO.ENT.PASS.12M Electronic distribution - NO MEDIA Contract: MARKET	1	5744579	$0.00	$0.00
CrowdStrike 12-Month Express Support Mfg. Part#: RR.HOS.ENT.EXPS.12M Electronic distribution - NO MEDIA Contract: MARKET	1	4915958	$0.00	$0.00
University LMS Subscription Customer Access Pass - web-based training Mfg. Part#: RR.PSO.ENT.PASS.12M Electronic distribution - NO MEDIA	1	5744579	$6,500.00	$6,500.00

SUBTOTAL	$185,100.00
SHIPPING	$0.00
SALES TAX	$0.00
GRAND TOTAL	**$185,100.00**

PURCHASER BILLING INFO	DELIVER TO
Billing Address: CITY OF ROCKLIN ACCTS PAYABLE 3970 ROCKLIN RD ROCKLIN, CA 95677-2720 **Phone:** (916) 625-5000 **Payment Terms:** Net 30 Days-Govt State/Local	**Shipping Address:** CITY OF ROCKLIN - IT BRIAN GRAVES 4081 ALVIS CT ROCKLIN, CA 95677-4012 **Shipping Method:** ELECTRONIC DISTRIBUTION
	Please remit payments to:
	CDW Government 75 Remittance Drive Suite 1515 Chicago, IL 60675-1515

Sales Contact Info

Jeff Butchko | (877) 853-0557 | jeffbut@cdwg.com

Need Help?

My Account | Support | Call 800.800.4239

About Us | Privacy Policy | Terms and Conditions

This order is subject to CDW's Terms and Conditions of Sales and Service Projects at
http://www.cdwg.com/content/terms-conditions/product-sales.aspx
For more information, contact a CDW account manager.

© 2025 CDW•G LLC, 200 N. Milwaukee Avenue, Vernon Hills, IL 60061 | 800.808.4239

Bid Document

© CDW Government LLC 2025 | 230 N. Milwaukee Ave. | Vernon Hills, IL 60061

To the extent allowable, all information and documents hereby submitted in response to the Request for Quote ("RFQ") furnished by the City of Rocklin are the Proprietary and Confidential property of CDW Government LLC.

City of Rocklin California
InformationTechnology Division

Date: 01/08/2025

REQUEST FOR QUOTE # 25-02
CrowdStrike Falcon Complete Endpoint Protection Software

Please submit quote by e-mail

~~**Due 5 PM Tuesday 01/21/2025**~~ **Extended to 3 PM Friday 01/24/2025**

Acquisition Information	**Supplier Information**
Name: Ruth Green Phone: (916) 625-5080 e-mail: ruth.green@rocklin.ca.us	Name: CDW Government LLC Contact: Jeff Butchko – Account Manager Address: 230 N. Milwaukee Avenue, Vernon Hills, IL 60061 Phone: (847) 371-5500 e-mail: jeffbut@cdwg.com
Ship to Location: City of Rocklin Ruth Green 4081 Alvis Court Rocklin, CA 95677	Federal Employer Identification Number: 36-4230110 Name of person completing quote: Jeff Butchko – Acct Mngr Signature: Justin Schwier Date: 01/23/2025 Justin Schwier – Manager, Proposals

Price Quote is good for a minimum of 30 days unless otherwise noted

Freight - Include all freight in quote prices

Overview

The City of Rocklin (City) seeks to obtain offers for goods and for IT operational managed services support for CrowdStrike Falcon Complete Endpoint Protection Platform with Managed Detection and Response (MDR) Bundle (CrowdStrike Software).

The CrowdStrike Software, together with the operational managed services support, must meet the following specifications:

- Detect user access levels on endpoints, including administrative access, and provide additional search and analytic capabilities with this data.
- Provide a means to see a near real-time endpoint inventory, and online reports for system application, including versions of applications.
- Detect rogue endpoints (endpoints on the entity's network not covered by the selected endpoint solution).
- Provide real-time prevention and detection, without the need for constant remote connectivity or updates.
- Use indicators of compromise to identify abnormalities.
- Utilize artificial intelligence (AI) designed to prevent and detect abnormalities and attempted exploits including "zero day" (never-before seen malware) attacks.
- MDR solution providing 24 x7 monitoring for vulnerabilities, threats and risks
    - Provide expert teams of researchers and investigators
    - Team of responders who provide always-on monitoring and response
    - Solution to provide detection, response, containment, and remediation to validate threats has been neutralized

The goal of this RFQ is to establish an agreement for a three (3) year term (March 20, 2025 to March 19, 2028) **paid annually**.

RFQ Response Content: A completed copy of the Cost Worksheet (**Attachment A**) must be submitted.

About CDW Government

Quick Facts

Vernon Hills, IL
U.S. Headquarters

$21B
2023 Annual Net Sales

15,100
Coworkers

250,000+
Customers

189
Fortune 500 Ranking

#5
CRN's Solution Provider 500 List

CDW Government LLC (CDW Government) is a wholly owned subsidiary of CDW LLC (CDW), a leading multi-brand technology solutions provider to business, government, education, and healthcare organizations in the U.S., the U.K., and Canada. Established in 1984, CDW's sustainable growth and continued financial stability serve to assure the City of Rocklin that we are here to stay and can support you through the life of this contract and beyond. Recognizing the unique challenges and opportunities of our public sector customers, we established CDW Government in 1998 to focus on the specific needs of our education and government customers. Our teams are broken down by segment, with separate teams serving state and local and federal government customers. For local specialization, teams are further organized into geographic regions. We have an expansive network of offices near major cities and a large team of field coworkers across the United States.

State and Local Government Expertise

With more than 20 years of experience serving state and local governments (SLG), CDW Government can help you implement the right technology solutions to meet your agency's mission and goals and better prepare for tomorrow's IT challenges. We have more than 250 dedicated SLG account professionals serving all 50 states from the largest state agencies to the smallest rural communities. Through regional segmentation, we ensure that each agency's needs are addressed with personalized customer service. Your dedicated teams are well-attuned to the legislative and fiscal calendars at the state level, as well as business cycles and practices of major metropolitan areas.

© CDW Government LLC 2025 | 230 N. Milwaukee Ave. | Vernon Hills, IL 60061

To the extent allowable, all information and documents hereby submitted in response to the Request for Quote ("RFQ") furnished by the City of Rocklin are the Proprietary and Confidential property of CDW Government LLC.

Specialized Focus Areas

Based on our understanding of government practice, we have developed specialized focus areas, including small and rural cities, utilities, transit, and public safety.

Small and Rural Cities

Through tailored solutions and dedicated support, CDW Government is committed to empowering cities of 20,000 citizens or less with the technology and resources needed to deliver essential public services. We focus on enhancing service delivery through scalable solutions, advanced technology integration, and proactive security measures, ensuring efficient operations and improved citizen services.

Utilities

We have supported public utility customers across thousands of projects, and currently serve approximately 6,000 electric, gas, water, sewage, sanitary, and irrigation customers across the United States. Our teams focus on solutions that help solve pressing challenges, such as security threats and risks, urgent government mandates, and optimizing collaboration across teams.

Transportation

We help transportation customers enhance operational efficiency, improve safety, and drive digital transformation through innovative technology solutions. By leveraging IoT, edge computing, and smart infrastructure, CDW helps transportation organizations implement systems that optimize traffic management, monitor fleet performance, and enable predictive maintenance.

Public Safety

With more than 20 years of experience and 100s of engagements, we understand that access to real-time data helps improve first responders' response time and streamline agencies' operations for greater flexibility and reliability. Our dedicated team of public safety specialists has the expertise and partnerships to design and deploy public safety IT solutions quickly and efficiently.

© CDW Government LLC 2025 | 230 N. Milwaukee Ave. | Vernon Hills, IL 60061

To the extent allowable, all information and documents hereby submitted in response to the Request for Quote ("RFQ") furnished by the City of Rocklin are the Proprietary and Confidential property of CDW Government LLC.

Strengths, Best Practices, and Value

By aligning with CDW Government, your organization can take advantage of our strengths, best practices, and value-added services.

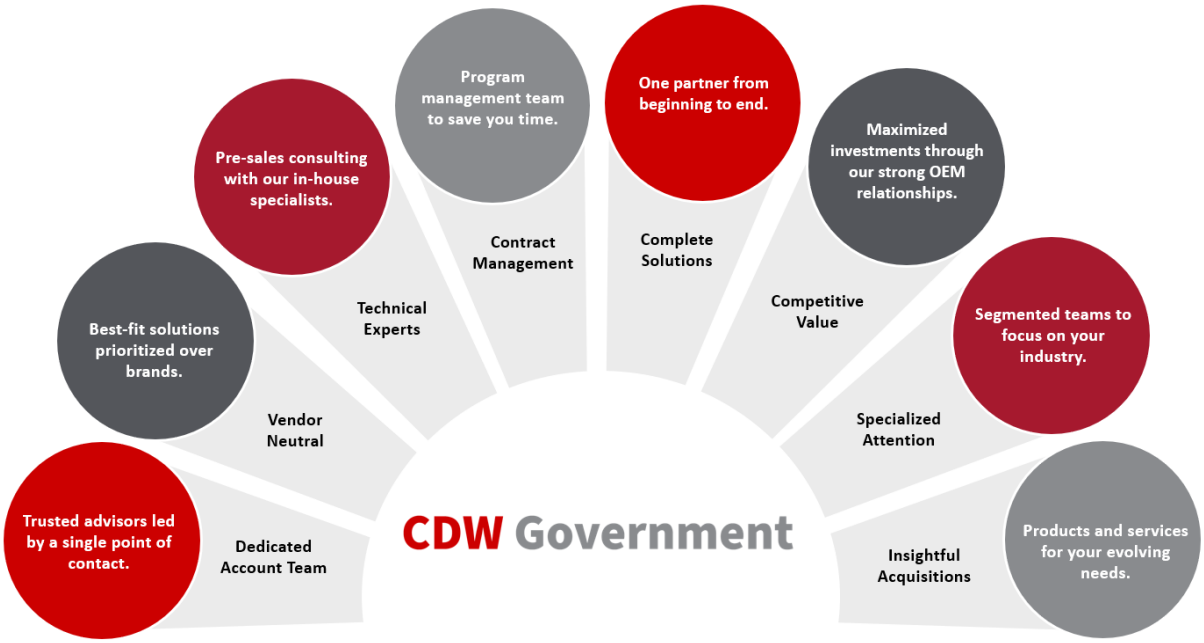

Full Stack. Full Lifecycle. Full Outcomes.

We make complex solutions easy and efficient with our full life-cycle approach - Listen, Advise, Design, Orchestrate, and Manage.

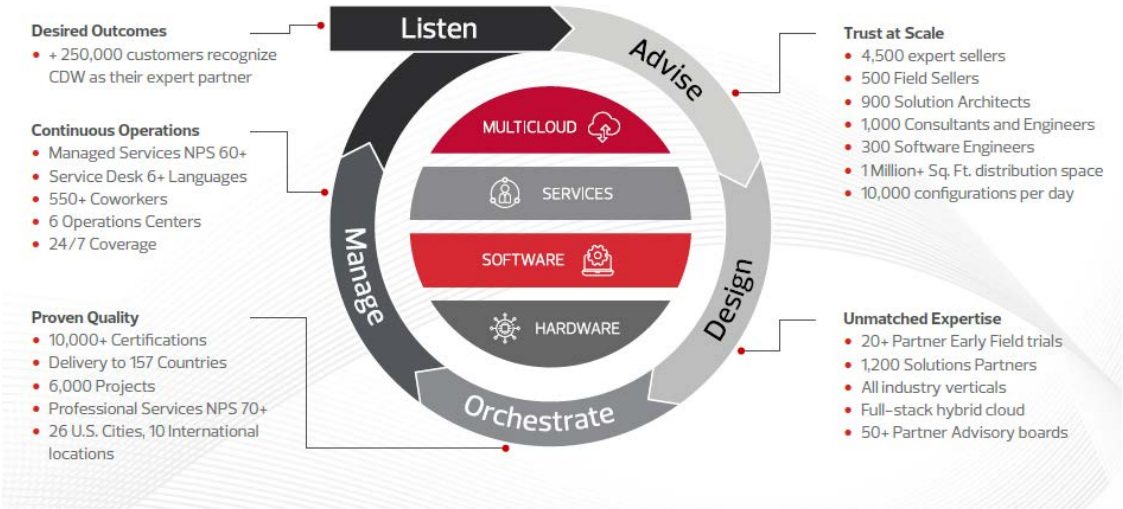

© CDW Government LLC 2025 | 230 N. Milwaukee Ave. | Vernon Hills, IL 60061

To the extent allowable, all information and documents hereby submitted in response to the Request for Quote ("RFQ") furnished by the City of Rocklin are the Proprietary and Confidential property of CDW Government LLC.

Dedicated Support Resources

When you work with CDW Government, you have access to expertise that is not available within your organization. Our teams will tailor a piece of equipment or an entire network to deliver the most effective and sustainable results.

Daily Account Management

Your CDW Government team is responsible for managing your procurement needs and overseeing all facets of your account. The team will establish a regular meeting cadence to discuss your current needs, IT standards, and long-term goals.

Jeff Butchko, Account Manager
P: (847) 371-5500, E: jeffbut@cdwg.com

Sales Leadership

Your CDW Government sales leaders help develop strategies that best serve your long-term success. They are also responsible for building and maintaining strong partner relationships that we can leverage to benefit your organization.

Drew Gillis, Sales Manager
P: (312) 547-2365, E: drewgil@cdwg.com

Presales IT Expert Consultants

Your team engages our in-house resources to help you develop the best solution for your unique needs, challenges, and long-term goals. Trained in specific technologies, solutions, and/or partner products, our specialists work with you to offer advice on the best solutions.

© CDW Government LLC 2025 | 230 N. Milwaukee Ave. | Vernon Hills, IL 60061

To the extent allowable, all information and documents hereby submitted in response to the Request for Quote ("RFQ") furnished by the City of Rocklin are the Proprietary and Confidential property of CDW Government LLC.

Strong Vendor Partnerships

When it comes to IT, we know you have many choices. When you work with CDW Government, we will leverage our strong industry partnerships with leading manufacturers and service providers to help you obtain the best value for your complete IT solution. With more than 1,000 industry-leading vendor partners, we give you access to one of the largest technology portfolios in the industry. Our partnership will also provide you with:

- **Product Insight**. We work closely with the leading manufacturers to review roadmaps and evaluate new models. This enables us to develop strategies for smooth upgrades and transitions, and directly informs our advice and recommendations to the City of Rocklin.
- **In-House Expertise.** Our account managers and technical staff are regularly trained and certified by our manufacturing partners to ensure optimal product deployment and management in your environment.
- **Expedited Access.** Some of our top vendor partners staff representatives at CDW to facilitate requests for information and assist with solution design, giving you direct access to their expertise and insight.
- **Seamless Deployment.** Our account teams build strong relationships with our partners through regular communication and collaboration. This helps ensure a smooth deployment process from beginning to end.
- **Risk Mitigation**. We receive detailed insight into supply chain availability, manufacturing delays, distribution shortages, overstocks, and other disruptions. This allows us to better forecast product availability and plan for your needs.
- **Best Value Solutions.** We leverage our relationships to secure competitive prices and ensure we deliver the best value to maximize your investments.

For a full list of our vendor partners, please visit https://www.cdw.com/content/cdw/en/brand.html.

© CDW Government LLC 2025 | 230 N. Milwaukee Ave. | Vernon Hills, IL 60061

To the extent allowable, all information and documents hereby submitted in response to the Request for Quote ("RFQ") furnished by the City of Rocklin are the Proprietary and Confidential property of CDW Government LLC.

Simplify Your IT Journey

Large In-Stock Inventory and In-House Services

A significant advantage we offer the City of Rocklin is our ability to deliver the right products, at the right value, right when you need them. CDW has two large, strategically located distribution centers controlled by a state-of-the-art Warehouse Management System that ensures speed and accuracy throughout the order fulfillment and distribution processes (**Figure 2**). The Vernon Hills and North Las Vegas locations facilitate quick distribution of products, as well as provide configuration capabilities in-house.

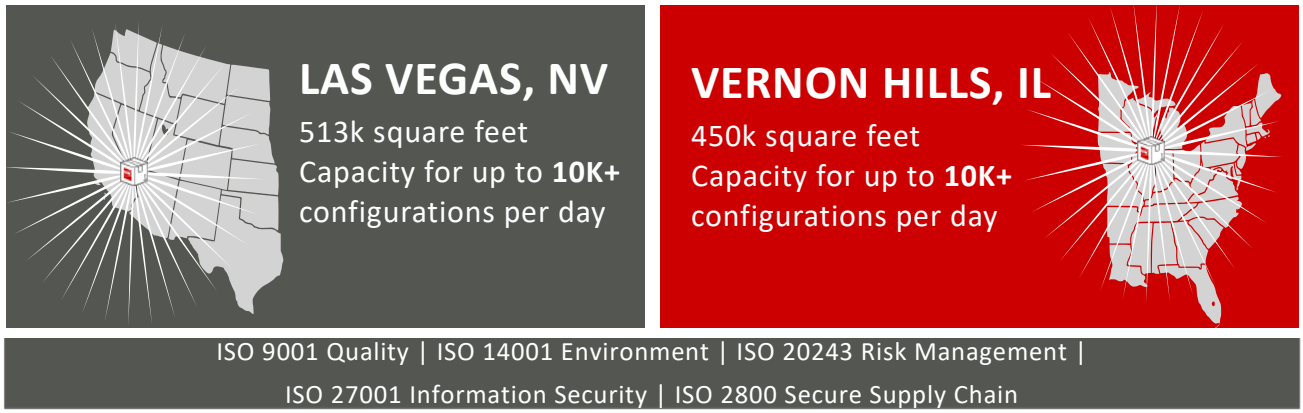

Figure 1 - Our distribution and configuration centers help ensure speed and accuracy throughout the project.

To supplement our direct purchasing model, CDW has developed strong affiliations with principal channel distributors. Our distribution centers are close to principal distributors; this enables us to quickly obtain competitively priced, non-stocked items.

Streamline Your Experience

Your CDW Government team works closely with the City of Rocklin's key stakeholders, as well as your selected manufacturers (OEMs) and service providers. We will be your single point of contact, facilitating communication and simplifying your experience.

© CDW Government LLC 2025 | 230 N. Milwaukee Ave. | Vernon Hills, IL 60061

To the extent allowable, all information and documents hereby submitted in response to the Request for Quote ("RFQ") furnished by the City of Rocklin are the Proprietary and Confidential property of CDW Government LLC.

All in One Place – Your Online CDW Account Portal

CDW.com is a full-commerce-enabled website, filterable by industry, with functions that include product search, browse and compare, checkout, and access to a digital account portal to manage your technology investments.

Your customizable Rubi portal serves as your trusted digital adviser. An example of our customer-centric approach, Rubi is the evolution of your CDW Account Center, developed in direct response to customer feedback.

Rubi helps you plan, procure, and manage assets across your technology lifecycle with greater confidence and less complexity. From one central portal, configurable for relevance, you can simplify the ordering process, access industry knowledge, and collaborate with technology experts to take more informed action on your investments.

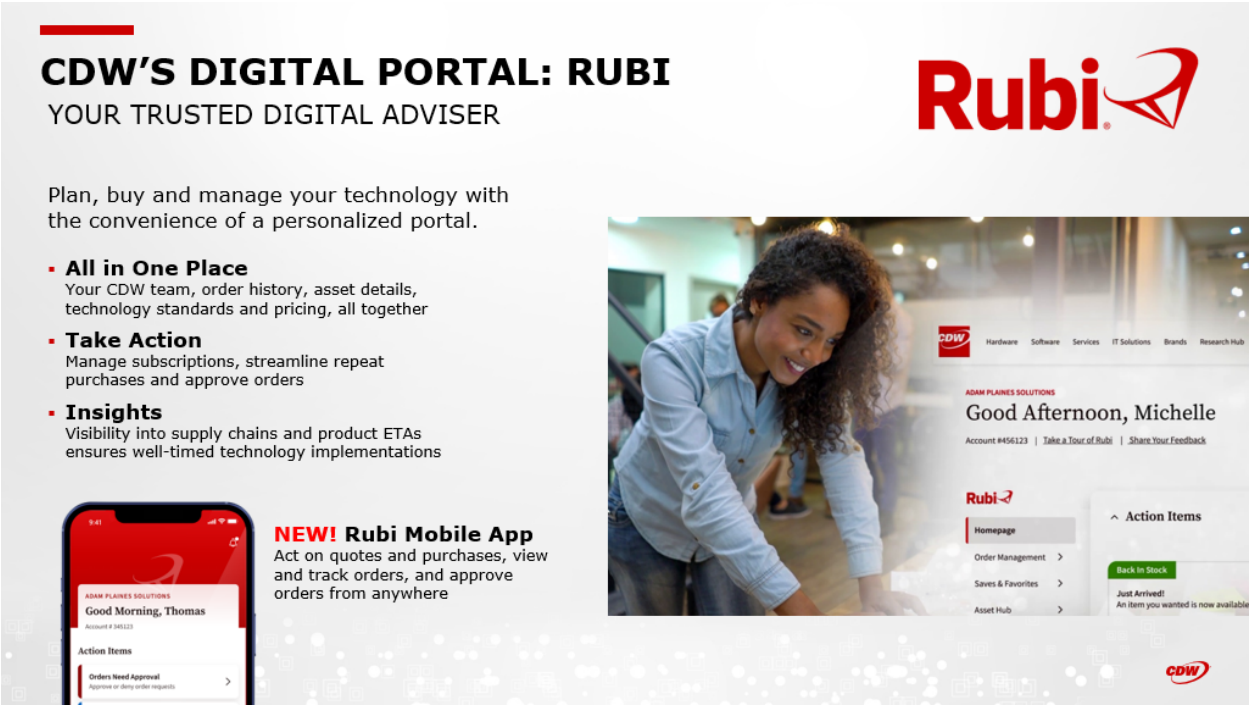

© CDW Government LLC 2025 | 230 N. Milwaukee Ave. | Vernon Hills, IL 60061

To the extent allowable, all information and documents hereby submitted in response to the Request for Quote ("RFQ") furnished by the City of Rocklin are the Proprietary and Confidential property of CDW Government LLC.

Appointment of Authorized Representative with Limited Signing Authority

In accordance with the authority delegated to the undersigned, Robert F. Kirby, President, CDW Government LLC ("**Company**"), the undersigned hereby delegates to Justin Schwier ("**Authorized Representative**") holding the title, Manager, Proposals ("**Authorized Title**"), of Company or its affiliate, the authority solely to review and execute certain Contract documents, subject to certain limitations, as set forth in the table below ("**Restricted Authority**").

Contract Types: *select type of agreement (one or more may apply)*	☐	Agreements and purchase orders related to marketing.
	☐	Nondisclosure and other forms of confidentiality agreements and non-binding letters of intent in connection with potential M&A opportunities.
	☐	Non-disclosure and other forms of confidentiality agreements with customers and partners.
	☐	Agreements with customers to provide IT products and professional services (to the extent such services are authorized by the undersigned), and all such accompanying forms (attestations and disclosures) that are generally required to form a complete contract including memorandums of understanding, and subcontracts with partners on the Agreements described above, but excluding software beta test and early adoptee agreements, and any agreements out of the ordinary course of Company's business.
	☒	Bids & Proposals to provide IT products and professional services, (to the extent such services are authorized by the undersigned), and all such accompanying forms (attestations and disclosures) that are generally required to form a complete offer for contract package, but excluding software beta test and early adoptee offers, and any offer out of the ordinary course of Company's business.
	☐	SOWs and Change Orders with customers to provide IT professional services (to the extent such services are authorized by the undersigned), but excluding software beta test and early adoptee contracts, and any contracts out of the ordinary course of Company's business.
	☐	Agreements with partners to purchase IT products and professional services (to the extent such services are authorized by the undersigned), but excluding software beta test and early adoptee agreements, and any agreements out of the ordinary course of Company's business.
	☐	Agreements, including but not limited to, Participation Agreements and Teaming Agreements with Partners/Vendors to provide IT products and professional services to customers (to the extent such services are authorized by the undersigned), but excluding agreements for software beta test and early adoptee agreements, and any agreements out of the ordinary course of Company's business.
	☐	SOWs with Partners/Vendors to provide IT professional services to Customers (to the extent such services are authorized by the undersigned), but excluding agreements for software beta test and early adoptee agreements, and any agreements out of the ordinary course of Company's business.
Check other:	☐	[Click to fill in description]
Territorial Limit	U.S. Only	
Not to Exceed Dollar Value Limit	Up to $5,000,000 . (This is total value, not annual value, of a contract.)	
Not to Exceed Contract Duration for Services	Up to three (3) year(s)	
Required Approvals and Other Conditions	• Compliance with Company Legal Department mandated contract review process. • Compliance with Company policies. • Capital expenditures approval, if applicable. • General Counsel review if Contract is with any principal stockholder, director or officer (or immediate family member) of a CDW company. • Treasurer review of any grant of a security interest or lien. • Legal approval of any contract with a foreign entity. • Delegation in the Agiloft tool as backup for you while out must only be provided to an individual coworker with the same title and level of signing authority as you, or your manager.	

[Signature Page Follows]

Authorized Representative shall use the following signature block, or one that indicates in a substantially similar manner that the Authorized Representative is authorized when executing Contracts on behalf of Company:

CDW Government LLC

By: Justin Schwier, its Authorized Representative

This appointment is effective on the date specified below and shall remain in effect until the earliest of: (a) the date, December 31, 2023, when this Restricted Authority expires; (b) the date when the Authorized Representative no longer holds the Authorized Title; or (c) the date when the Restricted Authority is terminated by the undersigned. Authorized Representative may not assign or delegate the Restricted Authority to any other person.

Effective Date January 1, 2023:

Robert F. Kirby
President
CDW Government LLC

Received and Approved by Corporate Paralegal:

Janell Nelsen

Received and Approved by the Corporate Secretary's Office:

April Hanes-Dowd

© CDW Government LLC 2025 | 230 N. Milwaukee Ave. | Vernon Hills, IL 60061

To the extent allowable, all information and documents hereby submitted in response to the Request for Quote ("RFQ") furnished by the City of Rocklin are the Proprietary and Confidential property of CDW Government LLC.

TERMS AND CONDITIONS

SALES AND SERVICE PROJECTS

PLEASE READ THESE TERMS AND CONDITIONS VERY CAREFULLY

THE TERMS AND CONDITIONS OF PRODUCT SALES AND SERVICE PROJECTS ARE LIMITED TO THOSE CONTAINED HEREIN. ANY ADDITIONAL OR DIFFERENT TERMS OR CONDITIONS IN ANY FORM DELIVERED BY YOU ("CUSTOMER") ARE HEREBY DEEMED TO BE MATERIAL ALTERATIONS AND NOTICE OF OBJECTION TO THEM AND REJECTION OF THEM IS HEREBY GIVEN.

BY ACCEPTING DELIVERY OF THE PRODUCTS OR BY ENGAGING THE CDW AFFILIATE IDENTIFED ON THE INVOICE, STATEMENT OF WORK OR OTHER CDW DOCUMENTATION ("SELLER") TO PROVIDE PRODUCT OR PERFORM OR PROCURE ANY SERVICES, CUSTOMER AGREES TO BE BOUND BY AND ACCEPTS THESE TERMS AND CONDITIONS, UNLESS CUSTOMER AND SELLER HAVE SIGNED A SEPARATE AGREEMENT, IN WHICH CASE THE SEPARATE AGREEMENT WILL GOVERN.

ANY GENERAL DESCRIPTION OF THE TYPES OF PRODUCTS OR SERVICES AND RESULTS THEREOF POSTED ON ANY SELLER WEBSITE OR MOBILE APPLICATION DO NOT CONSTITUTE PART OF THE AGREEMENT BETWEEN SELLER AND CUSTOMER.

Important Information About These Terms and Conditions

These Terms and Conditions constitute a binding contract between Customer and Seller and are referred to herein as either "Terms and Conditions" or this "Agreement". Customer accepts these Terms and Conditions by making a purchase from or placing an order with Seller or shopping on any Seller Website or Mobile Application (each, a "Site") or otherwise requesting products (the “Products”) or engaging Seller to perform or procure any Services (as this and all capitalized terms are defined herein). These Terms and Conditions are subject to change without

prior notice, except that the Terms and Conditions posted on a Site at the time Customer places an order or signs a Statement of Work will govern the order in question unless otherwise agreed in writing by Seller and Customer.

Customer consents to receiving electronic records, which may be provided via a Web browser or e-mail application connected to the Internet; individual consumers may withdraw consent to receiving electronic records or have the record provided in non-electronic form by contacting Seller. In addition, Internet connectivity requires access services from an Internet access provider. Contact your local access provider for details. Electronic signatures (or copies of signatures sent via electronic means) are the equivalent of written and signed documents.

Customer may issue a purchase order for administrative purposes only. Additional or different terms and conditions contained in any such purchase order will be null and void. No course of prior dealings between the parties and no usage of trade will be relevant to determine the meaning of these Terms and Conditions or any purchase order or invoice, or any document in electronic or written form that is signed and delivered by each of the parties for the performance of Services other than Third Party Services (each, a “Statement of Work”). This Agreement contains the entire understanding of the parties with respect to the matters contained herein and supersedes and replaces in its entirety any and all prior communications and contemporaneous agreements and understandings, whether oral, written, electronic or implied, if any, between the parties with respect to the subject matter hereof.

Governing Law

THESE TERMS AND CONDITIONS, ANY STATEMENTS OF WORK, THE SERVICES HEREUNDER AND ANY SALE OF PRODUCTS HEREUNDER WILL BE GOVERNED BY THE LAWS OF THE STATE OF ILLINOIS, WITHOUT REGARD TO CONFLICTS OF LAWS RULES. ANY ARBITRATION, ENFORCEMENT OF AN ARBITRATION OR LITIGATION WILL BE BROUGHT EXCLUSIVELY IN COOK COUNTY, ILLINOIS, AND CUSTOMER CONSENTS TO THE JURISDICTION OF THE FEDERAL AND STATE COURTS LOCATED THEREIN, SUBMITS TO THE JURISDICTION THEREOF AND WAIVES THE RIGHT TO CHANGE VENUE. CUSTOMER FURTHER CONSENTS TO THE EXERCISE OF PERSONAL JURISDICTION BY ANY SUCH COURT WITH RESPECT TO ANY SUCH PROCEEDING. Except in the case of nonpayment, neither party may institute any action in any form arising out of these Terms and Conditions more than one (1) year after the cause of action has arisen. The rights and remedies provided Seller under these Terms and Conditions are cumulative, are in addition to, and do not limit or prejudice any other right or remedy available at law or in equity.

Title; Risk of Loss

If Customer provides Seller with Customer’s carrier account number or selects a carrier other than a carrier that regularly ships for Seller, title to Products and risk of loss or damage during shipment pass from Seller to Customer upon delivery to the carrier (F.O.B. Origin, freight collect). For all other shipments, title to Products and risk of loss or damage during shipment pass from Seller to Customer upon delivery to the specified destination (F.O.B. Destination, freight prepaid and added). Notwithstanding the foregoing, title to software will remain with the applicable licensor(s), and Customer's rights therein are contained in the license agreement between such licensor(s) and Customer.

Services

Customers may order services (collectively, "Services") from or through Seller from time to time. Certain Services may be provided by third parties, including, but not limited to, extended warranty service by manufacturers, and are sold by Seller as distributor or sales agent ("Third Party Services").

In the case of Third Party Services, Customer shall consider the third party to be the contracting party and the third party shall be the party responsible for providing the services to the Customer and Customer will look solely to the third party for any loss, claims or damages arising from or related to the provision of such Third Party Services. Customer and Customer's Affiliates (defined below) hereby release Seller and Seller's Affiliates (defined below) from any and all claims arising from or relating to the purchase or provision of any such Third Parties Services. Any amounts, including, but not limited to, taxes, associated with Third Party Services which may be collected by Seller will be collected solely in the capacity as an independent sales agent. For purposes of this Agreement (a) "Affiliate" means, with respect to Seller, entities that Control, are Controlled by, or are under common Control with Seller; and, with respect to Customer, entities both that Control are Controlled by, or are under common Control with Customer, and (b) "Control" or "Controlled" means the possession, directly or indirectly, of the power to direct or cause the direction of the affairs of another whether by ownership of shares, ability to appoint officers, contract or otherwise.

Where Services are ordered in a Statement of Work, each Statement of Work hereby incorporates these Terms and Conditions and constitutes a separate agreement with respect to the Services performed. Seller, or any of its Affiliates on behalf of Seller, may execute a Statement of Work. In the event of an addition to or a conflict between any term or condition of the Statement of Work and these Terms and Conditions, these Terms and Conditions will control, except as expressly amended in the applicable Statement of Work by specific reference to this Agreement. Each such amendment will be applicable only with respect to such Statement of Work and not to future Statements of Work. Changes to the scope of the Services described in a Statement of Work will be made only in a writing executed by authorized representatives of both parties. Seller will have no obligation to commence work in connection with any such change, unless and until the change is agreed upon in that writing executed by both parties. All such changes to the scope of the Services will be governed by these Terms and Conditions and the applicable Statement of Work. Each Statement of Work may be signed in separate counterparts each of which shall be deemed an original and all of which together will be deemed to be one original.

Cooperation

In addition to any specific Customer duties set forth in any applicable Statement of Work, Customer agrees to cooperate with Seller in connection with performance of the Services by providing: (i) timely responses to Seller's inquiries and requests for approvals and authorizations, (ii) access to any information or materials reasonably requested by Seller which are necessary or useful as determined by Seller in connection with providing the Services, including, but not limited to, physical and computer access to Customer's computer systems, and (iii) all Required Consents necessary for Seller to provide the Services. "Required Consents" means consents or approvals required to give Seller, its Affiliates, and its and their subcontractors the right or license to access, use and modify all data and third-party products. Customer acknowledges and agrees that the Services are dependent upon the completeness and accuracy of information provided by Customer and the knowledge and cooperation of the agents, employees or subcontractors ("Personnel") engaged or appointed by Customer who are selected by Customer to work with Seller.

Seller will follow all reasonable Customer security rules and procedures, as communicated in writing by Customer to Seller from time to time.

Access

Seller may perform the Services at Customer's place of business, at Seller's own facilities or such other locations as Seller and Customer deem appropriate. When the Services are performed at Customer's premises, Seller will attempt to perform such Services within Customer's normal business hours unless otherwise jointly agreed to by the parties. Customer will also provide Seller access to Customer's staff and any other Customer resources (and when the Services are provided at another location designated by Customer, the staff and resources at such location) that Seller determines are useful or necessary for Seller to provide the Services. When the Services are provided on Customer's premises or at another location designated by Customer, Customer agrees to maintain adequate insurance coverage to protect Seller and Customer's premises and to indemnify and hold Seller and its Affiliates, and its and their agents and employees harmless from any loss, cost, damage or expense (including, but not limited to, attorneys' fees and expenses) arising out of any product liability, death, personal injury or property damage or destruction occurring at such location in connection with the performance of the Services, other than solely as a result of Seller's gross negligence or willful misconduct.

Payment

Orders are not binding upon Seller until accepted by Seller. Customer agrees to pay the total purchase price for the Products plus shipping (to the extent shipping is not prepaid by Customer), including shipping charges that are billed to Seller as a result of using Customer's carrier account number. Terms of payment are within Seller's sole discretion. In connection with Services being performed pursuant to a Statement of Work, Customer will pay for the Services in the amounts and in accordance with any payment schedule set forth in the applicable Statement of Work. If no payment schedule is provided, Customer will pay for the Services as invoiced by Seller. Invoices are due and payable within the time period specified on the invoice, measured from the date of invoice, subject to continuing credit approval by Seller. Seller, or any of its Affiliates on behalf of Seller may issue an invoice to Customer. Seller may invoice Customer separately for partial shipments, and Seller may invoice Customer for all of the Services described in a Statement of Work or any portion thereof. Customer agrees to pay interest on all past-due sums at the lower of one and one-half percent (1.5%) per month or the highest rate allowed by law. Customer will pay for, and will indemnify and hold Seller and its Affiliates harmless from, any applicable sales, use, transaction, excise or similar taxes and any federal, state or local fees or charges (including, but not limited to, environmental or similar fees), imposed on, in respect of or otherwise associated with any Statement of Work, the Products or the Services. Customer must claim any exemption from such taxes, fees or charges at the time of purchase and provide Seller with the necessary supporting documentation. In the event of a payment default, Customer will be responsible for all of Seller’s costs of collection, including, but not limited to, court costs, filing fees and attorneys’ fees. In addition, if payments are not received as described above, Seller reserves the right to suspend Services until payment is received. Customer hereby grants to Seller a security interest in the Products to secure payment in full. Customer authorizes Seller to file a financing statement reflecting such security interest. Except as otherwise specified on an applicable Statement of Work, Customer will reimburse Seller for all reasonable out-of-pocket expenses incurred by Seller in connection with the performance of the Services, including, but not limited to, travel and living expenses.

Export Sales

If this transaction involves an export of items (including, but not limited to, commodities, software or technology) subject to the Export Administration Regulations, such items were exported from the United States by Seller in accordance with the Export Administration Regulations. Customer agrees that it will not divert, use, export or re-export such items contrary to United States law. Customer expressly acknowledges and agrees that it will not export, re-export, or provide such items to any entity or person within any country that is subject to United States economic sanctions imposing comprehensive embargoes without obtaining prior authorization from the United States Government. The list of such countries subject to United States economic sanctions or embargoes may change from time to time but currently includes Cuba, Iran, Sudan, and Syria. Customer also expressly acknowledges and agrees that it will not export, re-export, or provide such items to entities and persons that are ineligible under United States law to receive such items, including but not limited to, any person or entity on the United States Treasury Department's list of Specially Designated Nationals or on the United States Commerce Department's Denied Persons List, Entity List, or Unverified List. In addition, manufacturers' warranties for exported Products may vary or may be null and void for Products exported outside the United States.

Warranties

Customer understands that Seller is not the manufacturer of the Products purchased by Customer hereunder and the only warranties offered are those of the manufacturer, not Seller or its Affiliates. In purchasing the Products, Customer is relying on the manufacturer's specifications only and is not relying on any statements, specifications, photographs or other illustrations representing the Products that may be provided by Seller or its Affiliates. SELLER AND ITS AFFILIATES HEREBY EXPRESSLY DISCLAIM ALL WARRANTIES EITHER EXPRESS OR IMPLIED, RELATED TO PRODUCTS, INCLUDING, BUT NOT LIMITED TO, ANY WARRANTY OF TITLE, ACCURACY, MERCHANTABILITY OR FITNESS FOR A PARTICULAR PURPOSE, WARRANTY OF NONINFRINGEMENT, OR ANY WARRANTY RELATING TO THIRD PARTY SERVICES. THE DISCLAIMER CONTAINED IN THIS PARAGRAPH DOES NOT AFFECT THE TERMS OF ANY MANUFACTURER'S WARRANTY. Customer expressly waives any claim that it may have against Seller or its Affiliates based on any product liability or infringement or alleged infringement of any patent, copyright, trade secret or other intellectual property rights (each a "Claim") with respect to any Product and also waives any right to indemnification from Seller or its Affiliates against any such Claim made against Customer by a third party. Customer acknowledges that no employee of Seller or its Affiliates is authorized to make any representation or warranty on behalf of Seller or any of its Affiliates that is not in this Agreement.

Seller makes no warranties to the Customer and the Customer hereby acknowledges that Seller makes no warranties in regard to the applicability of all laws and regulations affecting, without limitation the manufacture, performance, sale, packaging and labelling of the Products which are in force within the Customer's territory.

Customer further acknowledges and agrees that Seller makes no representations, warranties or assurances that the Products are designed for or suitable for use in any high risk environment, including but not limited to aircraft or automobile safety devices or navigation, life support systems or medical devices, nuclear facilities, or weapon systems, and Customer agrees to indemnify Seller in connection with any such use of the

Products. Customer further agrees to review and comply with the manufacture's disclaimers and restrictions regarding the use of the Products in high risk environments.

Seller warrants that the Services will be performed in a good and workmanlike manner. Customer's sole and exclusive remedy and Seller's entire liability with respect to this warranty will be, at the sole option of Seller, to either (a) use its reasonable commercial efforts to reperform or cause to be reperformed any Services not in substantial compliance with this warranty or (b) refund amounts paid by Customer related to the portion of the Services not in substantial compliance; provided, in each case, Customer notifies Seller in writing within five (5) business days after performance of the applicable Services. EXCEPT AS SET FORTH HEREIN OR IN ANY STATEMENT OF WORK THAT EXPRESSLY AMENDS SELLER'S WARRANTY, AND SUBJECT TO APPLICABLE LAW, SELLER MAKES NO OTHER, AND EXPRESSLY DISCLAIMS ALL OTHER, REPRESENTATIONS, WARRANTIES, CONDITIONS OR COVENANTS, EITHER EXPRESS OR IMPLIED (INCLUDING WITHOUT LIMITATION, ANY EXPRESS OR IMPLIED WARRANTIES OR CONDITIONS OF FITNESS FOR A PARTICULAR PURPOSE, MERCHANTABILITY, DURABILITY, TITLE, ACCURACY OR NON-INFRINGEMENT) ARISING OUT OF OR RELATED TO THE PERFORMANCE OR NON-PERFORMANCE OF THE SERVICES, INCLUDING BUT NOT LIMITED TO ANY WARRANTY RELATING TO THIRD PARTY SERVICES, ANY WARRANTY WITH RESPECT TO THE PERFORMANCE OF ANY HARDWARE OR SOFTWARE USED IN PERFORMING SERVICES AND ANY WARRANTY CONCERNING THE RESULTS TO BE OBTAINED FROM THE SERVICES. THIS DISCLAIMER AND EXCLUSION SHALL APPLY EVEN IF THE EXPRESS WARRANTY AND LIMITED REMEDY SET FORTH HEREIN FAILS OF ITS ESSENTIAL PURPOSE. CUSTOMER ACKNOWLEDGES THAT NO REPRESENTATIVE OF SELLER OR OF ITS AFFILIATES IS AUTHORIZED TO MAKE ANY REPRESENTATION OR WARRANTY ON BEHALF OF SELLER OR ANY OF ITS AFFILIATES THAT IS NOT IN THIS AGREEMENT OR IN A STATEMENT OF WORK EXPRESSLY AMENDING SELLER'S WARRANTY.

Customer shall be solely responsible for daily back-up and other protection of its data and software against loss, damage or corruption. Customer shall be solely responsible for reconstructing data (including but not limited to data located on disk files and memories) and software that may be lost, damaged or corrupted during the performance of Services. SELLER, ITS AFFILIATES, AND ITS AND THEIR SUPPLIERS, SUBCONTRACTORS AND AGENTS ARE HEREBY RELEASED AND SHALL CONTINUE TO BE RELEASED FROM ALL LIABILITY IN CONNECTION WITH THE LOSS, DAMAGE OR CORRUPTION OF DATA AND SOFTWARE, AND CUSTOMER ASSUMES ALL RISK OF LOSS, DAMAGE OR CORRUPTION OF DATA AND SOFTWARE IN ANY WAY RELATED TO OR RESULTING FROM THE SERVICES.

Seller will not be responsible for and no liability shall result to Seller or any of its Affiliates for any delays in delivery or in performance which result from any circumstances beyond Seller's reasonable control, including, but not limited to, Product unavailability, carrier delays, delays due to fire, severe weather conditions, failure of power, labor problems, acts of war, terrorism, embargo, acts of God or acts or laws of any government or agency. Any shipping dates or completion dates provided by Seller or any purported deadlines contained in a Statement of Work or any other document are estimates only.

Pricing Information; Availability Disclaimer

Seller reserves the right to make adjustments to pricing, Products and Service offerings for reasons including, but not limited to, changing market conditions, Product discontinuation, Product unavailability, manufacturer price changes, supplier price changes and errors in advertisements. All orders are subject to Product availability and the availability of Personnel to perform the Services. Therefore, Seller cannot guarantee that it will

be able to fulfill Customer’s orders. If Services are being performed on a time and materials basis, any estimates provided by Seller are for planning purposes only.

Credits

Any credit issued by Seller to Customer for any reason must be used within two (2) years from the date that the credit was issued and may only be used for future purchases of Products and/or Services. Any credit or portion thereof not used within the two (2) year period will automatically expire.

Limitation of Liability

UNDER NO CIRCUMSTANCES AND NOTWITHSTANDING THE FAILURE OF ESSENTIAL PURPOSE OF ANY REMEDY SET FORTH HEREIN, WILL SELLER, ITS AFFILIATES OR ITS OR THEIR SUPPLIERS, SUBCONTRACTORS OR AGENTS BE LIABLE FOR: (A) ANY INCIDENTAL, INDIRECT, SPECIAL, PUNITIVE OR CONSEQUENTIAL DAMAGES INCLUDING BUT NOT LIMITED TO, LOSS OF PROFITS, BUSINESS, REVENUES OR SAVINGS, EVEN IF SELLER HAS BEEN ADVISED OF THE POSSIBILITIES OF SUCH DAMAGES OR IF SUCH DAMAGES ARE OTHERWISE FORESEEABLE, IN EACH CASE, WHETHER A CLAIM FOR ANY SUCH LIABILITY IS PREMISED UPON BREACH OF CONTRACT, WARRANTY, NEGLIGENCE, STRICT LIABILITY OR OTHER THEORY OF LIABILITY; (B) ANY CLAIMS, DEMANDS OR ACTIONS AGAINST CUSTOMER BY ANY THIRD PARTY; (C) ANY LOSS OR CLAIM ARISING OUT OF OR IN CONNECTION WITH CUSTOMER'S IMPLEMENTATION OF ANY CONCLUSIONS OR RECOMMENDATIONS BY SELLER OR ITS AFFILIATES BASED ON, RESULTING FROM, ARISING OUT OF OR OTHERWISE RELATED TO THE PRODUCTS OR SERVICES; OR (D) ANY UNAVAILABILITY OF THE PRODUCT FOR USE OR ANY LOST, DAMAGED OR CORRUPTED DATA OR SOFTWARE. IN THE EVENT OF ANY LIABILITY INCURRED BY SELLER OR ANY OF ITS AFFILIATES, THE ENTIRE LIABILITY OF SELLER AND ITS AFFILIATES FOR DAMAGES FROM ANY CAUSE WHATSOEVER WILL NOT EXCEED THE LESSER OF: (A) THE DOLLAR AMOUNT PAID BY CUSTOMER FOR THE PRODUCT(S) GIVING RISE TO THE CLAIM OR THE SPECIFIC SERVICES GIVING RISE TO THE CLAIM; OR (B) $50,000.00.

Limited License

Customer's sole rights to the work product, materials and other deliverables to be provided or created (individually or jointly) in connection with the Services, including but not limited to, all inventions, discoveries, methods, processes, formulae, ideas, concepts, techniques, know-how, data, designs, models, prototypes, works of authorship, computer programs, proprietary tools, methods of analysis and other information (whether or not capable of protection by patent, copyright, trade secret, confidentiality, or other proprietary rights) or discovered in the course of performance of this Agreement that are embodied in such work or materials ("Work Product") will be, upon payment in full, a non-transferable, non-exclusive, royalty-free license to use such Work Products solely for Customer's internal use. Customer will have no ownership or other property rights thereto and Customer shall have no right to use any such Work Product for any other purpose whatsoever. Customer acknowledges that Sellers may incorporate intellectual property created by third parties into the Work Product (“Third Party Intellectual Property”). Customer agrees that its right

to use the Work Product containing Third Party Intellectual Property may be subject to the rights of third parties and limited by agreements with such third parties.

Confidential Information

Each party anticipates that it may be necessary to provide access to information of a confidential nature of such party, the Affiliates or a third party (hereinafter referred to as "Confidential Information") to the other party in the performance of this Agreement and any Statement of Work. "Confidential Information" means any information or data in oral, electronic or written form which the receiving party knows or has reason to know is proprietary or confidential and which is disclosed by a party in connection with this Agreement or which the receiving party may have access to in connection with this Agreement, including but not limited to the terms and conditions of each Statement of Work. Confidential Information will not include information which: (a) becomes known to the public through no act of the receiving party; (b) was known to the receiving party, or becomes known to the receiving party from a third party having the right to disclose it and having no obligation of confidentiality to the disclosing party with respect to the applicable information; or (c) is independently developed by agents, employees or subcontractors of the receiving party who have not had access to such information. To the extent practicable, Confidential Information should be clearly identified or labeled as such by the disclosing party at the time of disclosure or as promptly thereafter as possible, however, failure to so identify or label such Confidential Information will not be evidence that such information is not confidential or protectable.

Each party agrees to hold the other party's Confidential Information confidential for a period of three (3) years following the date of disclosure and to do so in a manner at least as protective as it holds its own Confidential Information of like kind but to use no less than a reasonable degree of care. Disclosures of the other party's Confidential Information will be restricted (i) to those individuals who are participating in the performance of this Agreement or the applicable Statement of Work and need to know such Confidential Information for purposes of providing or receiving the Products or Services or otherwise in connection with this Agreement or the applicable Statement of Work, or (ii) to its business, legal and financial advisors, each on a confidential basis. Each party agrees not to use any Confidential Information of the other party for any purpose other than the business purposes contemplated by this Agreement and the applicable Statement of Work. Upon the written request of a party, the other party will either return or certify the destruction of the Confidential Information of the other party.

If a receiving party is required by law, rule or regulation, or requested in any judicial or administrative proceeding or by any governmental or regulatory authority, to disclose Confidential Information of the other party, the receiving party will give the disclosing party prompt notice of such request so that the disclosing party may seek an appropriate protective order or similar protective measure and will use reasonable efforts to obtain confidential treatment of the Confidential Information so disclosed.

Return Privileges

CDW allows Customer returns based on the policies of the original product manufacturer. Software is not returnable if the packaging has been opened. If software was distributed electronically, it is not returnable if the licenses were downloaded. For additional information see CDW’s full Product Return Policy at the following link: Return Policy. Customers should contact CDW Customer Relations at 866.SVC.4CDW or e-mail at

Customer Relations to initiate a return or for additional information. Customers must notify CDW Customer Relations of any damaged Products within fifteen (15) days of receipt.

Termination

Either party may terminate performance of a Service or a Statement of Work for cause if the other party fails to cure a material default in the time period specified herein. Any material default must be specifically identified in a written notice of termination. After written notice, the notified party will, subject to the provision of warranties herein, have thirty (30) days to remedy its performance except that it will only have ten (10) days to remedy any monetary default. Failure to remedy any material default within the applicable time period provided for herein will give cause for immediate termination, unless such default is incapable of being cured within the time period in which case the defaulting party will not be in breach (except for Customer's payment obligations) if it used its reasonable efforts to cure the default. In the event of any termination of the Services or a Statement of Work, Customer will pay Seller for all Services performed and expenses incurred up to and including the date of termination plus any termination fee if one is set forth in the applicable Statement of Work. In such event Customer will also pay Seller for any out-of-pocket demobilization or other direct costs resulting from termination. Upon termination, all rights and obligations of the parties under the Service or Statement of Work (as applicable) will automatically terminate except for any right of action occurring prior to termination, payment obligations and obligations that expressly or by implication are intended to survive termination (including, but not limited to, limitation of liability, indemnity, confidentiality, or licensing of Work Product and this survival provision).

Provisions Related to Custom Imaging

If in connection with the provision of Products or Services, Customer desires to have Seller provide installation of custom software images, Customer will be required to execute an Installation Indemnity Agreement, a form of which is provided at http://www.cdw.com/forms/indemnity/app.asp

Arbitration

Any claim, dispute, or controversy (whether in contract, tort or otherwise, whether preexisting, present or future, and including, but not limited to, statutory, common law, intentional tort and equitable claims) arising from or relating to the Products, the Services, the interpretation or application of these Terms and Conditions or any Statement of Work or the breach, termination or validity thereof, the relationships which result from these Terms and Conditions or any Statement of Work (including, to the full extent permitted by applicable law, relationships with third parties who are not signatories hereto), or Seller's or any of its Affiliates' advertising or marketing (collectively, a "Claim") WILL BE RESOLVED, UPON THE ELECTION OF ANY OF SELLER, CUSTOMER OR THE THIRD PARTIES INVOLVED, EXCLUSIVELY AND FINALLY BY BINDING ARBITRATION. If arbitration is chosen, it will be conducted pursuant to the Rules of the American Arbitration Association. If arbitration is chosen by any party with respect to a Claim, neither Seller nor Customer will have the right to litigate that Claim in court or to have a jury trial on that Claim or to engage in pre-arbitration discovery, except as provided for in the applicable arbitration rules or by agreement of the parties involved. Further, Customer will

not have the right to participate as a representative or member of any class of claimants pertaining to any Claim. Notwithstanding any choice of law provision included in these Terms and Conditions, this arbitration agreement is subject to the Federal Arbitration Act (9 U.S.C. §§ 1-16). The arbitration will take place exclusively in Chicago, Illinois. Any court having jurisdiction may enter judgment on the award rendered by the arbitrator(s). Each party involved will bear its own cost of any legal representation, discovery or research required to complete arbitration. The existence or results of any arbitration will be treated as confidential. Notwithstanding anything to the contrary contained herein, all matters pertaining to the collection of amounts due to Seller arising out of the Products or Services will be exclusively litigated in court rather than through arbitration.

Personal Data

If and to the extent that Seller will process Personal Data on behalf of Customer in the provision of Services under this Agreement, the Data Processing Agreement provided at https://www.cdw.com/content/cdw/en/terms-conditions/cdw-data-processing-agreement.html shall apply to such processing and is incorporated by reference. As used herein, “Personal Data” means any information that identifies relates to, describes, is capable of being associated with, or could reasonably be linked, directly or indirectly, with a particular individual or household in connection with the Services performed for Customer, including without limitation any information that qualifies as “personal information” or “personal data” under data protection laws applicable to Seller.

Miscellaneous

Seller may assign or subcontract all or any portion of its rights or obligations with respect to the sale of Products or the performance of Services or assign the right to receive payments, without Customer's consent. Customer may not assign these Terms and Conditions, or any of its rights or obligations herein without the prior written consent of Seller. Subject to the restrictions in assignment contained herein, these Terms and Conditions will be binding on and inure to the benefit of the parties hereto and their successors and assigns. No provision of this Agreement or any Statement of Work will be deemed waived, amended or modified by either party unless such waiver, amendment or modification is in writing and signed by both parties. The relationship between Seller and Customer is that of independent contractors and not that of employer/employee, partnership or joint venture. If any term or condition of this Agreement or a Statement of Work is found by a court of competent jurisdiction to be invalid, illegal or otherwise unenforceable, the same shall not affect the other terms or conditions hereof or thereof or the whole of this Agreement or the applicable Statement of Work. Notices provided under this Agreement will be given in writing and deemed received upon the earlier of actual receipt or three (3) days after mailing if mailed postage prepaid by regular mail or airmail or one (1) day after such notice is sent by courier or facsimile transmission. Any delay or failure by either party to exercise any right or remedy will not constitute a waiver of that party to thereafter enforce such rights.

International Services

If and to the extent that any Statement of Work involves the provision of Services remotely by Seller to a Customer location outside of the United States, the following additional terms shall apply with respect to those Services only.

Customer will pay for, and will indemnify, defend and hold Seller and its Affiliates and each of their respective directors, officers, employees and agents harmless from loss (of any kind), cost, damage or expense (including, but not limited to, attorney's fees and expenses) arising out of any Taxes. Customer must claim any exemption from such taxes, fees or charges at the time of purchase and provide Seller with the necessary supporting documentation. Any taxes, charges, fees, penalties and interests in respect thereof that are the responsibility of Customer hereunder may be invoiced by Seller in the Product or Services invoices or separately. For purposes of this Section, "Taxes" means any applicable sales, use, transaction, value added, goods and services tax, harmonized sales tax, withholding tax, excise or similar taxes, and any foreign, provincial, federal, state or local fees or charges (including but not limited to, environmental or similar fees) and any income or business tax liability, including any penalties and interest in respect thereof, imposed on, in respect of or otherwise associated with any transaction hereunder, or the Purchased Items (except taxes on or measured by the net income of Seller).

If the Laws or a governmental authority imposes or adopts regulation, or there is a change in the Laws, which requires Seller or any of its Affiliates to register and/or obtain a governmental license, permit, or consent to make the Services available within a jurisdiction, Seller has the right not to make available or terminate the Service to the Customer's Affiliate(s) in such jurisdiction without any liability whatsoever to the Customer or its Affiliates. For purposes of this Agreement, "Laws" means any applicable federal, state, provincial, local, municipal, regional, foreign, international, multinational or other constitution, law, statute, treaty, rule, regulation, regulatory or legislative requirement, ordinance, license, restriction, judicial or administrative order, code, common law or other pronouncement having the effect of law.

Customer and Seller are solely obligated to address and resolve all claims, controversies or disputes associated with provision of Services (including any damages or injuries to a party's foreign Affiliates) in the United States as provided in the Arbitration clause above. In the event a party's foreign Affiliate brings suit or makes a claim or demand against the other party or an Affiliate of the other party located outside of the United States, such party will work with its foreign Affiliate to dismiss the suit, claim, or demand, and such party will bring such suit, claim or demand against the other party directly in the United States instead. In addition, such party will reimburse the other party or the other party's Affiliates for any of the costs or expenses that the other party or the other party's Affiliates reasonably incurred while responding to the suit, claim or demand brought by such party's foreign Affiliate.

Version Date: June 23, 2023

Related Links

- Site Use
- Privacy Policy
- Product Recalls

- Site Accessibility
- Site Map

With full-stack expertise, CDW helps you design, orchestrate and manage technologies that drive business success.

Contact An Expert: P 800.808.4239 | **Email Us**

What We Solve
Research Hub
Products

My Account
Order Status

ABOUT US

Why CDW
About Us
Accessibility Statement
Careers
Diversity and Inclusion
ESG
Investor Relations
International Solutions
Locations
Newsroom & Media
Suppliers
Sustainability

HOW CAN WE HELP

Customer Support / FAQs
eProcurement
e-Waste Recycling
Leasing Services
Product Recalls
Product Finders
CDW Outlet

CDW CDW-G Canada CDW-UK

Site Map Privacy Notice Cookie Notice Terms and Conditions
Do Not Sell or Share My Personal Information - Currently Sharing

Copyright © 2007 - 2025 CDW. All Rights Reserved. CDW®, CDW•G® and PEOPLE WHO GET IT® are registered trademarks of CDW LLC. All other trademarks and registered trademarks are the sole property of their respective owners.

CROWDSTRIKE TERMS AND CONDITIONS

PLEASE READ CAREFULLY: THE INDIVIDUAL ACCEPTING THESE TERMS AND CONDITIONS ON BEHALF OF A COMPANY OR OTHER LEGAL ENTITY (“CUSTOMER” OR “YOU”), REPRESENTS AND WARRANTS THAT HE OR SHE HAS FULL AUTHORITY TO BIND THE CUSTOMER TO THIS AGREEMENT. UNLESS THE CUSTOMER HAS ANOTHER VALID AGREEMENT FOR THE PURCHASE AND USE OF CROWDSTRIKE PRODUCTS AND SERVICES, THESE TERMS AND CONDITIONS GOVERN YOUR RIGHTS TO USE THE CROWDSTRIKE PRODUCTS AND SERVICES. BY ASSENTING TO THESE TERMS (EITHER BY CLICKING, CHECKING A BOX OR PLACING AN ORDER) CUSTOMER ACCEPTS THESE TERMS AND CONDITIONS, WHICH WILL BE DEEMED A BINDING CONTRACT BETWEEN CUSTOMER AND CROWDSTRIKE, INC., A DELAWARE CORPORATION, ON BEHALF OF ITSELF AND ANY AFFILIATES PERFORMING HEREUNDER (COLLECTIVELY, “CROWDSTRIKE”). IF CUSTOMER DOES NOT AGREE TO OR CANNOT COMPLY WITH ALL THE TERMS AND CONDITIONS OR IF THE INDIVIDUAL DOES NOT HAVE AUTHORITY TO BIND THE CUSTOMER, THEN DO NOT ASSENT AND CUSTOMER WILL NOT BE AUTHORIZED TO ACCESS OR USE THE PRODUCTS OR SERVICES. THESE TERMS AND CONDITIONS ARE BINDING AS OF THE EARLIEST OF THE DATE THAT CUSTOMER ACCEPTS THE TERMS AND CONDITIONS HEREIN, THE DATE SET FORTH ON AN ORDER OR THE DATE ON WHICH CUSTOMER DOWNLOADS, INSTALLS, ACTIVATES OR USES THE PRODUCT OR SERVICE.

These CrowdStrike Terms and Conditions are a master agreement that cover all CrowdStrike products and services but provisions regarding specific products or services apply only to the extent you have purchased, accessed or used such products or services.

1. Definitions.

“Affiliate” means any entity that a party directly or indirectly controls (e.g., subsidiary) or is controlled by (e.g., parent), or with which it is under common control (e.g., sibling).

“Agreement” means these CrowdStrike Terms and Conditions together with each Order.

“API” means an application program (or programming) interface.

“CrowdStrike Competitor” means a person or entity in the business of developing, distributing, or commercializing Internet security products or services substantially similar to or competitive with CrowdStrike's products or services.

“CrowdStrike Data” shall mean the data generated by the CrowdStrike Offerings, including but not limited to, correlative and/or contextual data, and/or detections. For the avoidance of doubt, CrowdStrike Data does not include Customer Data.

“CrowdStrike Tool” means any CrowdStrike proprietary software-as-a-service, software, hardware, or other tool that CrowdStrike uses in performing Professional Services, which may be specified in the applicable SOW. CrowdStrike Tools may include CrowdStrike’s products.

“Customer” means as the context requires, in addition to the entity identified above, any Customer Affiliate that places an Order under these CrowdStrike Terms and Conditions, uses or accesses any Offering hereunder, or benefits from the Customer’s use of an Offering.

“Customer Contractor” means any individual or entity (other than a CrowdStrike Competitor) that: (i) has access or use of a Product under this Agreement solely on behalf of and for Customer’s Internal Use, (ii) has an agreement to provide Customer (or its Affiliates) services, and (iii) is subject to confidentiality obligations covering CrowdStrike’s Confidential Information.

“Customer Contractor Services” means products, services or content developed or provided by Customer Contractors, including, but not limited to, third party applications complimentary to the Offerings, implementation services, managed services, training, technical support, or other consulting services related to, or in conjunction with, the Offerings.

“Documentation” means CrowdStrike’s end-user technical documentation included in the applicable Offering.

“Endpoint” means any physical or virtual device, such as, a computer, server, laptop, desktop computer, mobile, cellular, container or virtual machine image.

“Error” means a reproducible failure of a Product to perform in substantial conformity with its applicable Documentation.

“Internal Use” means access or use solely for Customer’s and subject to the Section entitled Affiliates, Orders and Payment; Affiliates and the Section entitled Access and Use Rights, its Affiliates’, own internal information security purposes. By way of example and not limitation, Internal Use does not include access or use: (i) for the benefit of any person or entity other than Customer or its Affiliates, or (ii) in any event, for the development of any product or service. Internal Use is limited to access and use by your and your Affiliates’ employees and Customer Contractors (except as set forth in the Section entitled Customer Contractors), in either event, solely on your behalf and for your benefit.

“Offerings” means, collectively, any Products, Product-Related Services, or Professional Services.

“Order” means any purchase order or other ordering document (including any SOW) accepted by CrowdStrike or a reseller that identifies the following ordered by Customer: Offering, Offering quantity based on CrowdStrike’s applicable license metrics (e.g., number of Endpoints, size of company (based on number of employees), number of file uploads, or number of queries), price and Subscription/Order Term.

“Product” means any of CrowdStrike’s cloud-based software or other products ordered by Customer as set forth in the relevant Order, the available accompanying API’s, the CrowdStrike Data, any Documentation and any Updates thereto that may be made available to Customer from time to time by CrowdStrike.

“Product-Related Services” means, collectively, (i) Falcon OverWatch, (ii) Falcon Complete Team, (iii) the technical support services for certain Products provided by CrowdStrike, (iv) training, and (v) any other CrowdStrike services provided or sold with Products. Product-Related Services do not include Professional Services.

“Professional Services” means any professional services performed by CrowdStrike for Customer pursuant to an SOW or other Order. Professional Services may include without limitation incident response, investigation and forensic services related to cyber-security adversaries, tabletop exercises, and next generation penetration tests related to cyber-security.

“Services” means, collectively, any Product-Related Services and any Professional Services.

“Statement of Work” or **“SOW”** means a mutually-agreed executed written document describing the Professional Services to be performed by CrowdStrike for Customer, deliverables, fees, and expenses related thereto.

“Subscription/Order Term” means the period of time set forth in the applicable Order during which: (i) Customer is authorized by CrowdStrike to access and use the Product or Product-Related Service, or (ii) Professional Services may be performed.

“Updates” means any correction, update, upgrade, patch, or other modification or addition made by CrowdStrike to any Product and provided to Customer by CrowdStrike from time to time on an as available basis.

2. Affiliates, Orders and Payment.

2.1 Affiliates. Any Affiliate purchasing hereunder, or using or accessing any Offering hereunder, or benefitting from the Customer’s use of an Offering, will be bound by and comply with all terms and conditions of this Agreement. The Customer signing these CrowdStrike Terms and Conditions will remain responsible for Customer’s Affiliates’ acts and omissions unless Customer’s Affiliate has entered into its own Terms and Conditions with CrowdStrike.

2.2 Orders. Only those transaction-specific terms stating the Offerings ordered, quantity, price, payment terms, Subscription/Order Term, and billing/provisioning contact information (and for the avoidance of doubt, specifically excluding any pre-printed terms on a Customer or reseller purchase order) will have any force or effect unless a particular Order is executed by an authorized signer of CrowdStrike and returned to Customer (or the applicable reseller). If any such Order is so executed and delivered, then only those specific terms on the face of such Order that expressly identify those portions of this Agreement that are to be superseded will prevail over any conflicting terms herein but only with respect to those Offerings ordered on such Order. Orders are non-cancellable. Any Order through a reseller is subject to, and CrowdStrike’s obligations and liabilities to Customer are governed by, this Agreement.

2.3 Payment and Taxes. Customer will pay the fees for Offerings to a reseller or CrowdStrike as set forth in the applicable Order. Unless otherwise expressly set forth on the Order, Customer will pay the fees and amounts stated on each Order within 30 days

after receipt of the applicable invoice. Except as otherwise expressly provided in this Agreement, all fees and other amounts are non-refundable. Fees are exclusive of any applicable sales, use, value added, withholding, and other taxes, however designated. Customer shall pay all such taxes levied or imposed by reason of Customer's purchase of the Offerings and the transactions hereunder, except for taxes based on CrowdStrike's income or with respect to CrowdStrike's employment of its employees.

3. Access & Use Rights.

3.1 Evaluation. If CrowdStrike approves Customer's evaluation use of a CrowdStrike product ("Evaluation Product"), the terms herein applicable to Products also apply to evaluation access and use of such Evaluation Product, except for the following different or additional terms: (i) the duration of the evaluation is as mutually agreed upon by you and CrowdStrike, provided that either CrowdStrike or you can terminate the evaluation at any time upon written (including email) notice to the other party; (ii) the Evaluation Product is provided "AS-IS" without warranty of any kind, and CrowdStrike disclaims all warranties, support obligations, and other liabilities and obligations for the Evaluation Product; and (iii) Customer's access and use is limited to Internal Use by Customer employees only.

3.2 Access & Use Rights. Subject to the terms and conditions of this Agreement (including CrowdStrike's receipt of applicable fees), CrowdStrike grants Customer, under CrowdStrike's intellectual property rights in and to the applicable Product, a non-exclusive, non-transferable (except as expressly provided in the Section entitled Assignment), non-sublicensable license to access and use the Products in accordance with any applicable Documentation solely for Customer's Internal Use during the applicable Subscription/Order Term. Customer's access and use is limited to the quantity in the applicable Order. Furthermore, the following additional terms and conditions apply to specific Products (or components thereof):

(a) Products with Software Components. If Customer purchases a subscription to a Product with a downloadable object-code component ("Software Component"), Customer may, during the Subscription/Order Term install and run multiple copies of the Software Components solely for Customer's and your Affiliates' Internal Use up to the maximum quantity in the applicable Order.

(b) CrowdStrike Tools. If CrowdStrike provides CrowdStrike Tools to you pursuant to performing Professional Services, the license set forth in the Section entitled Access & Use Rights applies to such CrowdStrike Tools as used solely for your Internal Use during the period of time set forth in the applicable Order, or if none is specified, for the period authorized by CrowdStrike. Not all Professional Services engagements will involve the use of CrowdStrike Tools.

3.3 Restrictions. The access and use rights set forth in the Section entitled Access & Use Rights do not include any rights to, and you will not, with respect to any Offering (or any portion thereof): (i) employ or authorize a CrowdStrike Competitor to use or view the Offering or Documentation, or to provide management, hosting, or support for an Offering; (ii) alter, publicly display, translate, create derivative works of or otherwise modify an Offering; (iii) sublicense, distribute or otherwise transfer an Offering to any third party (except as expressly provided in the Section entitled Assignment); (iv) allow third parties to access or use an Offering (except for Customer Contractors as expressly permitted herein);

(v) create public Internet “links” to an Offering or “frame” or “mirror” any Offering content on any other server or wireless or Internet-based device; (vi) reverse engineer, decompile, disassemble or otherwise attempt to derive the source code (if any) for an Offering (except to the extent that such prohibition is expressly precluded by applicable law), circumvent its functions, or attempt to gain unauthorized access to an Offering or its related systems or networks; (vii) use an Offering to circumvent the security of another party’s network/information, develop malware, unauthorized surreptitious surveillance, data modification, data exfiltration, data ransom or data destruction; (viii) remove or alter any notice of proprietary right appearing on an Offering; (ix) conduct any stress tests, competitive benchmarking or analysis on, or publish any performance data of, an Offering (provided, that this does not prevent Customer from comparing the Products to other products for Customer’s Internal Use); (x) use any feature of CrowdStrike APIs for any purpose other than in the performance of, and in accordance with, this Agreement; or (xi) cause, encourage or assist any third party to do any of the foregoing. Customer agrees to use an Offering in accordance with laws, rules and regulations directly applicable to Customer and acknowledges that Customer is solely responsible for determining whether a particular use of an Offering is compliant with such laws.

3.4 Installation and User Accounts. CrowdStrike is not responsible for installing Products unless you purchase installation services from CrowdStrike. For those Products requiring user accounts, only the single individual user assigned to a user account may access or use the Product. You are liable and responsible for all actions and omissions occurring under your and your Customer Contractor’s user accounts for Offerings. You shall notify CrowdStrike if you learn of any unauthorized access or use of your user accounts or passwords for an Offering.

3.5 Malware Samples. If CrowdStrike makes malware samples available to Customer in connection with an evaluation or use of the Product (“Malware Samples”), Customer acknowledges and agrees that: (i) Customer’s access to and use of Malware Samples is at Customer’s own risk, and (ii) Customer should not download or access any Malware Samples on or through its own production systems and networks and that doing so can infect and damage Customer’s systems, networks, and data. Customer shall use the Malware Samples solely for Internal Use and not for any malicious or unlawful purpose. CrowdStrike will not be liable for any loss or damage caused by any Malware Sample that may infect Customer’s computer equipment, computer programs, data, or other proprietary material due to Customer’s access to or use of the Malware Samples.

3.6 Third Party Software. CrowdStrike uses certain third party software in its Products, including what is commonly referred to as open source software. Under some of these third party licenses, CrowdStrike is required to provide Customer with notice of the license terms and attribution to the third party. See the licensing terms and attributions for such third party software that CrowdStrike uses at: https://falcon.crowdstrike.com/opensource.

3.7 Ownership & Feedback. Products, Product-Related Services and the CrowdStrike Tools are made available for use or licensed, not sold. CrowdStrike owns and retains all right, title and interest (including all intellectual property rights) in and to the Products, Product-Related Services and the CrowdStrike Tools. Any feedback or suggestions that Customer provides to CrowdStrike regarding its Offerings and CrowdStrike Tools (e.g., bug fixes and features requests) is non-confidential and may be used by CrowdStrike for any purpose

without acknowledgement or compensation; provided, Customer will not be identified publicly as the source of the feedback or suggestion.

4. Customer Contractors.

4.1 Authorization. Customer authorizes CrowdStrike to give Customer Contractors the rights and privileges to the Offerings necessary to enable and provide for Customer's use and receipt of the Customer Contractor Services. If at any time Customer revokes this authorization, to the extent the Offerings provide for Customer to limit the Customer Contractor's access and use of the Offerings, then Customer is responsible for taking the actions necessary to revoke such access and use. In the event Customer requires CrowdStrike assistance with such revocation or limitation, Customer must contact CrowdStrike Support with written notice of such revocation or limitation at support@crowdstrike.com and CrowdStrike will disable the Customer Contractor's access to Customer's Offerings within a reasonable period of time following receipt of such notice but in any event within 72 hours of receipt of such notice.

4.2 Disclaimer. Customer Contractors are subject to the terms and conditions in the Agreement while they are using the Offerings on behalf of Customer and Customer remains responsible for their acts and omissions during such time. Any breach by a Customer Contractor of this Agreement is a breach by Customer. CrowdStrike may make available Customer Contractor Services to Customer, for example, through an online directory, catalog, store, or marketplace. Customer Contractor Services are not required for use of the Offerings. Offerings may contain features, including API's, designed to interface with or provide data to Customer Contractor Services. CrowdStrike is not responsible or liable for any loss, costs or damages arising out of Customer Contractor's actions or inactions in any manner, including but not limited to, for any disclosure, transfer, modification or deletion of Customer Data (defined in Exhibit A). Whether or not a Customer Contractor is designated by CrowdStrike as, or otherwise claims to be "certified," "authorized," or similarly labeled, CrowdStrike does not: (i) control, monitor, maintain or provide support for, Customer Contractor Services, (ii) disclaims all warranties of any kind, indemnities, obligations, and other liabilities in connection with the Customer Contractor Services, and any Customer Contractor interface or integration with the Offerings, and (iii) cannot guarantee the continued availability of Customer Contractor Services and related features. If Customer Contractor Services and related features are no longer available for any reason, CrowdStrike is not obligated to provide any refund, credit, or other compensation for, or related to, the Offerings.

4.3 Restrictions on Customer Contractors. Customer shall not give or allow Customer Contractors access to, or use of, intelligence reports provided by, or made accessible in, the Products. For the avoidance of doubt, nothing herein prevents Customer from using intelligence API's in Customer Contractor Services for Customer's Internal Use.

5. Professional Services.

5.1 Fees. Professional Services will commence on a mutually agreed upon date. Estimates provided for Professional Services performed on a time-and-material basis are estimates only and not a guaranteed time of completion. Professional Services performed on a fixed fee basis are limited to the scope of services stated in the applicable Order.

5.2 Ownership of Deliverables. Professional Services do not constitute “works for hire,” “works made in the course of duty,” or similar terms under laws where the transfer of intellectual property occurs on the performance of services to a payor. The only deliverable arising from the Professional Services is a report consisting primarily of CrowdStrike’s findings, recommendations, and adversary information. You own the copy of the report (including without limitation, all your Confidential Information therein) delivered to you (“Deliverable”), subject to CrowdStrike’s ownership of the CrowdStrike Materials. You agree that relative to you, CrowdStrike exclusively owns any and all software (including object and source code), flow charts, algorithms, documentation, adversary information, report templates, know-how, inventions, techniques, models, CrowdStrike trademarks, ideas and any and all other works and materials developed by CrowdStrike in connection with performing the Professional Services (including without limitation all intellectual property rights therein and thereto) (collectively, the “CrowdStrike Materials”) and that title shall remain with CrowdStrike. For the avoidance of doubt, the CrowdStrike Materials do not include any Customer Confidential Information or other Customer provided materials or data. Upon payment in full of the amounts due hereunder for the applicable Professional Services and to the extent the CrowdStrike Materials are incorporated into the Deliverable(s), you shall have a perpetual, non-transferable (except as expressly provided in the Section entitled Assignment), non-exclusive license to use the CrowdStrike Materials solely as a part of the Deliverable(s) for your Internal Use.

6. Data Security and Privacy. See Exhibit A.

7. Confidentiality.

7.1 Definitions. In connection with this Agreement, each party (“Recipient”) may receive Confidential Information of the other party (“Discloser”) or third parties to whom Discloser has a duty of confidentiality. “Confidential Information” means non-public information in any form that is in the Recipient’s possession regardless of the method of acquisition that the Discloser designates as confidential to Recipient or should be reasonably known by the Recipient to be Confidential Information due to the nature of the information disclosed and/or the circumstances surrounding the disclosure. Confidential Information shall not include information that is: (i) in or becomes part of the public domain (other than by disclosure by Recipient in violation of this Agreement); (ii) previously known to Recipient without an obligation of confidentiality and demonstrable by the Recipient; (iii) independently developed by Recipient without use of Discloser’s Confidential Information; or (iv) rightfully obtained by Recipient from third parties without an obligation of confidentiality.

7.2 Restrictions on Use. Except as allowed in Section 7.3 (Exceptions), Recipient shall hold Discloser’s Confidential Information in strict confidence and shall not disclose any such Confidential Information to any third party, other than to its employees, and contractors, including without limitation, counsel, accountants, and financial advisors (collectively, “Representatives”), its Affiliates and their Representatives, subject to the other terms of this Agreement, and in each case who need to know such information and who are bound by restrictions regarding disclosure and use of such information comparable to and no less restrictive than those set forth herein. Recipient shall not use Discloser’s Confidential Information for any purpose other than as set forth in this Agreement. Recipient shall take the same degree of care that it uses to protect its own confidential information of a similar nature and importance (but in no event less than reasonable care) to protect the

confidentiality and avoid the unauthorized use, disclosure, publication, or dissemination of the Discloser's Confidential Information. Within 72 hours of Recipient becoming aware of the unauthorized use, disclosure, publication, or dissemination of the Discloser's Confidential Information while in Recipient's control, Recipient shall provide Discloser with notice thereof.

7.3 Exceptions. Recipient may disclose Discloser's Confidential Information: (i) to the extent required by applicable law or regulation; (ii) pursuant to a subpoena or order of a court or regulatory, self-regulatory, or legislative body of competent jurisdiction; (iii) in connection with any regulatory report, audit, or inquiry; or (iv) where requested by a regulator with jurisdiction over Recipient. In the event of such a requirement or request, Recipient shall, to the extent legally permitted: (a) give Discloser prompt written notice of such requirement or request prior to such disclosure; and (b) at Discloser's cost, a reasonable opportunity to review and comment upon the disclosure and request confidential treatment or a protective order pertaining thereto prior to Recipient making such disclosure. If the Recipient is legally required to disclose the Discloser's Confidential Information as part of: (x) a legal proceeding to which the Discloser is a party but the Recipient is not; or (y) a government or regulatory investigation of the Discloser, the Discloser shall pay all of the Recipient's reasonable and actual out of pocket legal fees and expenses (as evidenced by reasonably detailed invoices) and will reimburse the Recipient for its reasonable costs and fees of compiling and providing such Confidential Information, including, a reasonable hourly rate for time spent preparing for, and participating in, depositions and other testimony.

7.4 Destruction. Upon Discloser's written request, Recipient shall use commercially reasonable efforts to destroy the Confidential Information and any copies or extracts thereof. However, Recipient, its Affiliates and their Representatives may retain any Confidential Information that: (i) they are required to keep for compliance purposes under a document retention policy or as required by applicable law, professional standards, a court, or regulatory agency; or (ii) have been created electronically pursuant to automatic or ordinary course archiving, back-up, security, or disaster recovery systems or procedures; provided, however, that any such retained information shall remain subject to this Agreement. Upon Discloser's request, Recipient will provide Discloser with written confirmation of destruction in compliance with this provision.

7.5 Equitable Relief. Each party acknowledges that a breach of this Section 7 (Confidentiality) shall cause the other party irreparable injury and damage. Therefore, each party agrees that those breaches may be stopped through injunctive proceedings in addition to any other rights and remedies which may be available to the injured party at law or in equity without the posting of a bond.

8. Warranties & Disclaimer.

8.1 No Warranty for Pre-Production Versions. Any pre-production feature or version of an Offering provided to Customer is experimental and provided "AS IS" without warranty of any kind and will not create any obligation for CrowdStrike to continue to develop, productize, support, repair, offer for sale, or in any other way continue to provide or develop any such feature or Offering. Customer agrees that its purchase is not contingent on the delivery of any future functionality or features, or dependent on any oral or written statements made by CrowdStrike regarding future functionality or features.

8.2 Product Warranty. If Customer has purchased a Product, CrowdStrike warrants to Customer during the applicable Subscription/Order Term that: (i) the Product will operate without Error; and (ii) CrowdStrike has used industry standard techniques to prevent the Products at the time of delivery from injecting malicious software viruses into your Endpoints where the Products are installed. You must notify CrowdStrike of any warranty claim during the Subscription/Order Term. Your sole and exclusive remedy and the entire liability of CrowdStrike for its breach of this warranty will be for CrowdStrike, at its own expense to do at least one of the following: (a) use commercially reasonable efforts to provide a work-around or correct such Error; or (b) terminate your license to access and use the applicable non-conforming Product and refund the prepaid fee prorated for the unused period of the Subscription/Order Term. CrowdStrike shall have no obligation regarding Errors reported after the applicable Subscription/Order Term.

8.3 Services Warranty. CrowdStrike warrants to you that it will perform all Services in a professional and workmanlike manner consistent with generally accepted industry standards. You must notify CrowdStrike of any warranty claim for Services during the period the Services are being performed or within 30 days after the conclusion of the Services. Your sole and exclusive remedy and the entire liability of CrowdStrike for its breach of this warranty will be for CrowdStrike, at its option and expense, to (a) use commercially reasonable efforts to re-perform the non-conforming Services, or (b) refund the portion of the fees paid attributable to the non-conforming Services.

8.4 Exclusions. The express warranties do not apply if the applicable Product or Service: (i) has been modified, except by CrowdStrike, (ii) has not been installed, used, or maintained in accordance with this Agreement or Documentation, or (iii) is non-conforming due to a failure to use an applicable Update. If any part of a Product or Service references websites, hypertext links, network addresses, or other third party locations, information, or activities, it is provided as a convenience only.

8.5 No Guarantee. CUSTOMER ACKNOWLEDGES, UNDERSTANDS, AND AGREES THAT CROWDSTRIKE DOES NOT GUARANTEE OR WARRANT THAT IT WILL FIND, LOCATE, OR DISCOVER ALL OF CUSTOMER'S OR ITS AFFILIATES' SYSTEM THREATS, VULNERABILITIES, MALWARE, AND MALICIOUS SOFTWARE, AND CUSTOMER AND ITS AFFILIATES WILL NOT HOLD CROWDSTRIKE RESPONSIBLE THEREFOR.

8.6 Disclaimer. EXCEPT FOR THE EXPRESS WARRANTIES IN THIS SECTION 8, CROWDSTRIKE AND ITS AFFILIATES DISCLAIM ALL OTHER WARRANTIES, WHETHER EXPRESS, IMPLIED, STATUTORY OR OTHERWISE. TO THE MAXIMUM EXTENT PERMITTED UNDER APPLICABLE LAW, CROWDSTRIKE AND ITS AFFILIATES AND SUPPLIERS SPECIFICALLY DISCLAIM ALL IMPLIED WARRANTIES OF MERCHANTABILITY, FITNESS FOR A PARTICULAR PURPOSE, TITLE, AND NON-INFRINGEMENT WITH RESPECT TO THE OFFERINGS AND CROWDSTRIKE TOOLS. THERE IS NO WARRANTY THAT THE OFFERINGS OR CROWDSTRIKE TOOLS WILL BE ERROR FREE, OR THAT THEY WILL OPERATE WITHOUT INTERRUPTION OR WILL FULFILL ANY OF CUSTOMER'S PARTICULAR PURPOSES OR NEEDS. THE OFFERINGS AND CROWDSTRIKE TOOLS ARE NOT FAULT-TOLERANT AND ARE NOT DESIGNED OR INTENDED FOR USE IN ANY HAZARDOUS ENVIRONMENT REQUIRING FAIL-SAFE PERFORMANCE OR OPERATION. NEITHER THE OFFERINGS NOR CROWDSTRIKE TOOLS ARE FOR USE IN THE OPERATION OF AIRCRAFT

NAVIGATION, NUCLEAR FACILITIES, COMMUNICATION SYSTEMS, WEAPONS SYSTEMS, DIRECT OR INDIRECT LIFE-SUPPORT SYSTEMS, AIR TRAFFIC CONTROL, OR ANY APPLICATION OR INSTALLATION WHERE FAILURE COULD RESULT IN DEATH, SEVERE PHYSICAL INJURY, OR PROPERTY DAMAGE. Customer agrees that it is Customer's responsibility to ensure safe use of an Offering and the CrowdStrike Tools in such applications and installations. CROWDSTRIKE DOES NOT WARRANT ANY THIRD PARTY PRODUCTS OR SERVICES.

8.7 Additional Terms That May Apply. See Exhibit C for additional warranties that may apply to certain Customers.

9. Indemnification.

9.1 CrowdStrike's Obligation. CrowdStrike shall at its cost and expense: (i) defend and/or settle any claim brought against Customer by an unaffiliated third party alleging that an Offering infringes or violates that third party's intellectual property rights, and (ii) pay and indemnify any settlement of such claim or any damages awarded to such third party by a court of competent jurisdiction as a result of such claim; provided, that Customer: (a) gives CrowdStrike prompt written notice of such claim; (b) permits CrowdStrike to solely control and direct the defense or settlement of such claim (however, CrowdStrike will not settle any claim in a manner that requires Customer to admit liability without Customer's prior written consent); and (c) provides CrowdStrike all reasonable assistance in connection with the defense or settlement of such claim, at CrowdStrike's cost and expense. In addition, Customer may, at Customer's own expense, participate in defense of any claim.

9.2 Remedies. If a claim covered under this Section occurs or in CrowdStrike's opinion is reasonably likely to occur, CrowdStrike may at its expense and sole discretion (and if Customer's access and use of an Offering is enjoined, CrowdStrike will, at its expense): (i) procure the right to allow Customer to continue using the applicable Offering; (ii) modify or replace the applicable Offering to become non-infringing; or (iii) if neither (i) nor (ii) is commercially practicable, terminate Customer's license or access to the affected portion of applicable Offering and refund a portion of the pre-paid, unused fees paid by Customer corresponding to the unused period of the Subscription/Order Term.

9.3 Exclusions. CrowdStrike shall have no obligations under this Section if the claim is based upon or arises out of: (i) any modification to the applicable Offering not made by CrowdStrike; (ii) any combination or use of the applicable Offering with or in any third party software, hardware, process, firmware, or data, to the extent that such claim is based on such combination or use; (iii) Customer's continued use of the allegedly infringing Offering after being notified of the infringement claim or after being provided a modified version of the Offering by CrowdStrike at no additional cost that is intended to address such alleged infringement; (iv) Customer's failure to use the Offering in accordance with the applicable Documentation; and/or (v) Customer's use of the Offering outside the scope of the rights granted under this Agreement.

9.4 Exclusive Remedy. THE REMEDIES SPECIFIED IN THIS SECTION CONSTITUTE CUSTOMER'S SOLE AND EXCLUSIVE REMEDIES, AND CROWDSTRIKE'S ENTIRE LIABILITY, WITH RESPECT TO ANY INFRINGEMENT OF THIRD PARTY INTELLECTUAL PROPERTY RIGHTS.

10. Limitation of Liability.

10.1 TO THE MAXIMUM EXTENT PERMITTED BY APPLICABLE LAW, EXCEPT FOR LIABILITY FOR ANY AMOUNTS PAID OR PAYABLE TO THIRD PARTIES UNDER SECTION 9 (INDEMNIFICATION), CUSTOMER'S PAYMENT OBLIGATIONS, AND/OR ANY INFRINGEMENT OR MISAPPROPRIATION BY ONE PARTY OF THE OTHER PARTY'S INTELLECTUAL PROPERTY RIGHTS, NEITHER PARTY SHALL BE LIABLE TO THE OTHER PARTY IN CONNECTION WITH THIS AGREEMENT OR THE SUBJECT MATTER HEREOF (UNDER ANY THEORY OF LIABILITY, WHETHER IN CONTRACT, STATUTE, TORT OR OTHERWISE) FOR ANY LOST PROFITS, REVENUE, OR SAVINGS, LOST BUSINESS OPPORTUNITIES, LOST DATA, OR SPECIAL, INCIDENTAL, CONSEQUENTIAL, OR PUNITIVE DAMAGES, EVEN IF SUCH PARTY HAS BEEN ADVISED OF THE POSSIBILITY OF SUCH DAMAGES OR LOSSES OR SUCH DAMAGES OR LOSSES WERE REASONABLY FORESEEABLE; OR (B) AN AMOUNT THAT EXCEEDS THE TOTAL FEES PAID OR PAYABLE TO CROWDSTRIKE FOR THE RELEVANT OFFERING DURING THAT OFFERING'S SUBSCRIPTION/ORDER TERM. THESE LIMITATIONS WILL APPLY NOTWITHSTANDING ANY FAILURE OF ESSENTIAL PURPOSE OF ANY REMEDY SPECIFIED IN THIS AGREEMENT. MULTIPLE CLAIMS SHALL NOT EXPAND THE LIMITATIONS SPECIFIED IN THIS SECTION 10.

10.2 Additional or Different Terms That May Apply. See Exhibit C for additional or different terms related to liability that may apply to certain Customers.

11. Compliance with Laws. Each party agrees to comply with all U.S. federal, state, local and non-U.S. laws directly applicable to such party in the performance of this Agreement, including but not limited to, applicable export and import, anti-corruption and employment laws. Customer acknowledges and agrees the Offerings shall not be used, transferred, or otherwise exported or re-exported to regions that the United States and/or the European Union maintains an embargo or comprehensive sanctions (collectively, "Embargoed Countries"), or to or by a national or resident thereof, or any person or entity subject to individual prohibitions (e.g., parties listed on the U.S. Department of Treasury's List of Specially Designated Nationals or the U.S. Department of Commerce's Table of Denial Orders) (collectively, "Designated Nationals"), without first obtaining all required authorizations from the U.S. government and any other applicable government. Customer represents and warrants that Customer is not located in, or is under the control of, or a national or resident of, an Embargoed Country or Designated National. CrowdStrike represents and warrants that CrowdStrike is not located in, or is under the control of, or a national or resident of, an Embargoed Country or Designated National.

12. U.S. Government End Users.

12.1 Commercial Items. The following applies to all acquisitions by or for the U.S. government or by any U.S. Government prime contractor or subcontractor at any tier ("Government Users") under any U.S. Government contract, grant, other transaction, or other funding agreement. The Products, CrowdStrike Tools, and Documentation are "commercial items," as that term is defined in Federal Acquisition Regulation ("FAR") (48 C.F.R.) 2.101, consisting of "commercial computer software" and "commercial computer software documentation," as such terms are used in FAR 12.211 and 12.212. In addition, Department of Defense FAR Supplement ("DFARS") 252.227-7015 (Technical Data – Commercial Items) applies to technical data acquired by Department of Defense agencies.

Consistent with FAR 12.211 and 12.212 and DFARS (48 C.F.R.) 227.7202-1 through 227.7202-4, the Products, CrowdStrike Tools, and Documentation are being licensed to Government Users pursuant to the terms of this license(s) customarily provided to the public as forth in this Agreement, unless such terms are inconsistent with United States federal law ("Federal Law").

12.2 Disputes with the U.S. Government. If this Agreement fails to meet the Government's needs or is inconsistent in any way with Federal Law and the parties cannot reach a mutual agreement on terms for this Agreement, the Government agrees to terminate its use of the Offerings. In the event of any disputes with the U.S. Government in connection with this Agreement, Section 14.3 of this Agreement shall not apply. Instead the rights and duties of the parties arising from this Agreement, shall be governed by, construed, and enforced in accordance with Federal Procurement Law and any such disputes shall be resolved pursuant to the Contract Disputes Act of 1978, as amended (41 U.S.C. 7101-7109), as implemented by the Disputes Clause, FAR 52.233-1.

12.3 Precedence. This U.S. Government rights in this Section are in lieu of, and supersedes, any other FAR, DFARS, or other clause, provision, or supplemental regulation that addresses Government rights in the Offerings, computer software or technical data under this Agreement.

13. Suspension and Termination. This Agreement shall remain effective until termination in accordance with this Section or as otherwise specified herein. CrowdStrike may immediately suspend Customer's access to, or use of, the Offerings if: (i) CrowdStrike believes that there is a significant threat to the security, integrity, functionality, or availability of the Offerings or any content, data, or applications in the Offerings; (ii) Customer or Customer users are in breach of Section 3.3 (Restrictions); or (iii) Customer fails to pay CrowdStrike when undisputed fees are due; provided, however, CrowdStrike will use commercially reasonable efforts under the circumstances to provide Customer with notice and, if applicable, an opportunity to remedy such violation prior to any such suspension. Either party may terminate this Agreement upon 30 days' written notice of a material breach by the other party, unless the breach is cured within the 30-day notice period. Prior to termination and subject to the terms of this Agreement, Customer shall have the right to access and download Customer Data available per the Customer's purchased Products and data retention period in a manner and in a format supported by the Products. Upon termination of this Agreement for any reason: (a) all Customer's access and use rights granted in this Agreement will terminate; (b) Customer must promptly cease all use of Offerings and de-install all Software Components installed on Customer's Endpoints; and (c) Customer Data will be deleted in accordance with the data retention period purchased by Customer and Section 7.4 Confidentiality; Destruction). Sections 1, 3.3, 7, 10, 12, 13, and 14 and all liabilities that accrue prior to termination shall survive expiration or termination of this Agreement for any reason.

14. General.

14.1 Entire Agreement. This Agreement constitutes the entire agreement between Customer and CrowdStrike concerning the subject matter of this Agreement and it supersedes all prior and simultaneous proposals, agreements, understandings, or other communications between the parties, oral or written, regarding such subject matter. Notwithstanding the foregoing, if you have a CrowdStrike Limited Warranty Agreement for

Falcon Complete (or a preceding or successor named product) fully executed with CrowdStrike, the warranty provided therein stands alone and is not superseded by this Agreement. It is expressly agreed that the terms of this Agreement shall supersede any terms in any procurement Internet portal or other similar non-CrowdStrike document and no such terms included in any such portal or other non-CrowdStrike document shall apply to the Offerings ordered. Any Order through a reseller is subject to, and CrowdStrike's obligations and liabilities to Customer are governed by, this Agreement. CrowdStrike is not obligated under any reseller's agreement with you unless an officer of CrowdStrike executes the agreement. This Agreement shall not be construed for or against any party to this Agreement because that party or that party's legal representative drafted any of its provisions.

14.2 Assignment. Neither party may assign this Agreement without the prior written consent of the other party, except to an Affiliate in connection with a corporate reorganization or in connection with a merger, acquisition, or sale of all or substantially all of its business and/or assets. Any assignment in violation of this Section shall be void. Subject to the foregoing, all rights and obligations of the parties under this Agreement shall be binding upon and inure to the benefit of and be enforceable by and against the successors and permitted assigns.

14.3 Governing Law; Venue. Except as otherwise provided in Exhibit B (if applicable), this Agreement, and the rights and duties of the parties arising from this Agreement, shall be governed by, construed, and enforced in accordance with the laws of the State of California, excluding its conflicts-of-law principles. The sole and exclusive jurisdiction and venue for actions arising under this Agreement shall be state and federal courts in Santa Clara County, California, and the parties agree to service of process in accordance with the rules of such courts. The Uniform Computer Information Transactions Act and the United Nations Convention on the International Sale of Goods shall not apply. Notwithstanding the foregoing, each party reserves the right to file a suit or action in any court of competent jurisdiction as such party deems necessary to protect its intellectual property rights and, in CrowdStrike's case, to recoup any payments due.

14.4 Permission to List You as a Customer. Unless you direct otherwise by sending an email to us at legal@crowdstrike.com, which direction may be given at any time, you agree that CrowdStrike may display your company name and logo (in accordance with any trademark guidelines you provide) as a CrowdStrike customer in a manner that does not suggest your use or endorsement of any specific CrowdStrike product or service.

14.5 Independent Contractors; No Third Party Rights. The parties are independent contractors. This Agreement shall not establish any relationship of partnership, joint venture, employment, franchise, or agency between the parties. No provision in this Agreement is intended or shall create any rights with respect to the subject matter of this Agreement in any third party.

14.6 Waiver, Severability & Amendments. The failure of either party to enforce any provision of this Agreement shall not constitute a waiver of any other provision or any subsequent breach. If any provision of this Agreement is held to be illegal, invalid, or unenforceable, the provision will be enforced to the maximum extent permissible so as to affect the intent of the parties, and the remaining provisions of this Agreement will remain

in full force and effect. This Agreement may only be amended, or any term or condition set forth herein waived, by written consent of both parties.

14.7 Force Majeure. Neither party shall be liable for, nor shall either party be considered in breach of this Agreement due to, any failure to perform its obligations under this Agreement (other than its payment obligations) as a result of a cause beyond its control, including but not limited to, act of God or a public enemy, act of any military, civil or regulatory authority, change in any law or regulation, fire, flood, earthquake, storm or other like event, disruption or outage of communications (including an upstream server block and Internet or other networked environment disruption or outage), power or other utility, labor problem, or any other cause, whether similar or dissimilar to any of the foregoing, which could not have been prevented with reasonable care. The party experiencing a force majeure event, shall use commercially reasonable efforts to provide notice of such to the other party.

14.8 Notices. All legal notices will be given in writing to the addresses in the Order and will be effective: (i) when personally delivered, (ii) on the reported delivery date if sent by a recognized international or overnight courier, or (iii) five business days after being sent by registered or certified mail (or ten days for international mail). For clarity, Orders, POs, confirmations, invoices, and other documents relating to order processing and payment are not legal notices and may be delivered electronically in accordance with each party's standard ordering procedures.

Exhibit A: Data Security and Privacy Schedule

1. Definitions
a. **"CrowdStrike Systems"** means those computer systems hosting the 'Falcon EPP Platform'.
b. **"Customer Data"** means the data generated by the Customer's Endpoint and collected by: (i) the Products, and/or (ii) the CrowdStrike Tools, and in either case, sent to the CrowdStrike Systems. Customer Data is considered Customer's Confidential Information (defined in Section 7 Confidentiality) and subject to the exclusions, exceptions and obligations set forth therein and this Exhibit A Data Security and Privacy Schedule.
c. **"Execution Profile/Metric Data"** means any machine-generated data, such as metadata derived from tasks, file execution, commands, resources, network telemetry, executable binary files, macros, scripts, and processes, that: (i) Customer provides to CrowdStrike in connection with this Agreement or (ii) is collected or discovered during the course of CrowdStrike providing Offerings, excluding any such information or data that identifies Customer or to the extent it includes Personal Data.
d. **"Personal Data"** means information provided by Customer to CrowdStrike or collected by CrowdStrike from Customer used to distinguish or trace a natural person's identity, either alone or when combined with other personal or identifying information that is linked or linkable by CrowdStrike to a specific natural person. Personal Data also includes such other information about a specific natural person to the extent that the data protection laws applicable in the jurisdictions in which such person resides define such information as Personal Data.
e. **"Privacy and Security Laws"** means U.S. federal, state and local and non-U.S. laws, including those of the European Union, that regulate the privacy or security of Personal Data and that are directly applicable to CrowdStrike.
f. **"Security Breach"** means unauthorized access to, or unauthorized acquisition of: (i) Customer Data, or (ii) Personal Data, stored on CrowdStrike Systems that results in the

compromise of such Customer Data and/or Personal Data.
g. **"Threat Actor Data"** means any malware, spyware, virus, worm, Trojan horse, or other potentially malicious or harmful code or files, URLs, DNS data, network telemetry, commands, processes or techniques, metadata, or other information or data, in each case that is potentially related to unauthorized third parties associated therewith and that: (i) Customer provides to CrowdStrike in connection with this Agreement, or (ii) is collected or discovered during the course of CrowdStrike providing Offerings, excluding any such information or data that identifies Customer or to the extent that it includes Personal Data.

2. Falcon Platform
The 'Falcon EPP Platform' uses a crowd-sourced environment, for the benefit of all customers, to help customers protect themselves against suspicious and potentially destructive activities. CrowdStrike's Products are designed to detect, prevent, respond to, and identify intrusions by collecting and analyzing data, including machine event data, executed scripts, code, system files, log files, dll files, login data, binary files, tasks, resource information, commands, protocol identifiers, URLs, network data, and/or other executable code and metadata. Customer, rather than CrowdStrike, determines which types of data, whether Personal Data or not, exist on its systems. Accordingly, Customer's endpoint environment is unique in configurations and naming conventions and the machine event data could potentially include Personal Data. CrowdStrike uses the data to: (i) analyze, characterize, attribute, warn of, and/or respond to threats against Customer and other customer, (ii) analyze trends and performance, (iii) improve the functionality of, and develop, CrowdStrike's products and services, and enhance cybersecurity; and (iv) permit Customers to leverage other applications that use the data, but for all of the foregoing, in a way that does not identify Customer or Customer's Personal Data to other customers. Neither Execution Profile/Metric Data nor Threat Actor Data are Customer's Confidential Information or Customer Data.

3. Processing Personal Data
a. Provisioning/Use of Offerings. Personal Data may be collected and used during the provisioning and use of the Offerings to deliver, support and improve the Offerings, administer the Agreement and further the business relationship between you and CrowdStrike, comply with law, act in accordance with your written instructions, or otherwise in accordance with this Agreement. You authorize CrowdStrike to collect, use, store and transfer the Personal Data that you provide to CrowdStrike as contemplated in this Agreement.
b. Suspicious/Unknown File Analysis. While using certain CrowdStrike Offerings Customer may have the option to upload (by submission, configuration, and/or, in the case of Services, by CrowdStrike personnel retrieval) files and other information related to the files for security analysis and response or, when submitting crash reports, to make the product more reliable and/or improve CrowdStrike's products and services or enhance cyber-security. These potentially suspicious or unknown files may be transmitted and analyzed to determine functionality and their potential to cause instability or damage your endpoint. In some instances, these files could contain Personal Data for which you are responsible.

4. Compliance with Privacy and Information Security Requirements
a. Compliance with Laws. CrowdStrike shall comply with all Privacy and Security Laws, the EU-US Privacy Shield Framework and the Swiss-US Privacy Shield Framework as set forth by the US Department of Commerce regarding the collection, use, and retention of Personal Data from the European Economic Area, Switzerland, and the United Kingdom, as

applicable. CrowdStrike's privacy notice may be found at https://www.crowdstrike.com/privacy-notice/. To the extent necessary to comply with Privacy and Security Laws, including but not limited to when Customer is a controller of Personal Data processed by CrowdStrike originating in the European Union, Switzerland, or the United Kingdom, the Data Protection Addendum set forth here shall apply to CrowdStrike's processing of such Customer Personal Data.
b. Safeguards. CrowdStrike shall maintain appropriate technical and organizational safeguards commensurate with the sensitivity of the Customer Data and Personal Data processed by it on Customer's behalf, which are designed to protect the security, confidentiality, and integrity of such Customer Data and Personal Data and protect such Customer Data and Personal Data against accidental or unlawful destruction or accidental loss, alteration, unauthorized disclosure or access which substantially conform to the ISO/IEC 27002 control framework. ("Information Security Controls for CrowdStrike Systems").

5. Customer Obligations. Customer, along with its Affiliates, represents and warrants that: (i) it owns or has a right of use from a third party, and controls, directly or indirectly, all of the software, hardware and computer systems (collectively, "Systems") where the Products and/or CrowdStrike Tools will be installed or that will be the subject of, or investigated during, the Offerings, (ii) to the extent required under any federal, state, or local U.S. or non-US laws (e.g., Computer Fraud and Abuse Act, 18 U.S.C. § 1030 et seq., Title III, 18 U.S.C. 2510 et seq., and the Electronic Communications Privacy Act, 18 U.S.C. § 2701 et seq.) it has authorized CrowdStrike to access the Systems and process and transmit data through the Offerings and CrowdStrike Tools in accordance with this Agreement and as necessary to provide and perform the Offerings, (iii) it has a lawful basis in having CrowdStrike investigate the Systems, process the Customer Data and the Personal Data; (iv) that it is and will at all relevant times remain duly and effectively authorized to instruct CrowdStrike to carry out the Offerings, and (v)
it has made all necessary disclosures, obtained all necessary consents and government authorizations required under applicable law to permit the processing and international transfer of Customer Data and Customer Personal Data from each Customer and Customer Affiliate, to CrowdStrike.

Exhibit B
Dispute Resolution Outside North America

If your principal office is located outside North America as indicated in the Agreement, the terms and conditions of this Exhibit shall apply to all disputes arising out of or relating to this Agreement (excluding disputes regarding the actual or alleged violation of CrowdStrike's intellectual property rights or the collection of overdue invoices, which shall be governed by California law).

1. For ALL principal offices outside North America:

a. Choice of Law. This Agreement, and the rights and duties of the parties arising from this Agreement, shall be governed by, construed, and enforced with the laws of the State of New York, excluding its conflicts-of-law principles. The Uniform Computer Information Transactions Act and the United Nations Convention on the International Sale of Goods shall not apply.

b. Arbitration. Any dispute, claim, or controversy arising out of or relating to this Agreement or the existence, breach, termination, enforcement, interpretation, or validity of the Agreement, including the determination of the scope or applicability of this Agreement to arbitrate, (each, a “Dispute”) shall be referred to and finally resolved by arbitration under the rules and at the location identified below. The arbitral panel shall consist of three (3) arbitrators, selected as follows: each party shall appoint one (1) arbitrator; and those two (2) arbitrators shall discuss and select third arbitrator. If the two party-appointed arbitrators are unable to agree on a third arbitrator, the third arbitrator shall be selected in accordance with the applicable rules of the arbitration body. Each arbitrator shall be independent of each of the parties and shall have suitable experience and knowledge in the subject matter of the Dispute. The arbitrators shall have the authority to grant specific performance and to allocate between the parties the costs of arbitration (including service fees, arbitrator fees and all other fees related to the arbitration) in such equitable manner as the arbitrators may determine. Judgment upon the award so rendered may be entered in a court having jurisdiction or application may be made to such court for judicial acceptance of any award and an order of enforcement, as the case may be. Notwithstanding the foregoing, either party shall have the right to institute an action in a court of proper jurisdiction for preliminary injunctive relief pending a final decision by the arbitrator, provided that a permanent injunction and damages shall only be awarded by the arbitrator. The language to be used in the arbitral proceedings shall be English.

2. For ONLY principal offices within Europe, the Middle East or Africa:
Any Dispute shall be referred to and finally resolved by arbitration under the London Court of International Arbitration Rules (which Rules are deemed to be incorporated by reference into this clause) on the basis that the governing law is as follows: (a) if Customer brings an action against CrowdStrike, then the governing law is the State of New York, USA, (b) if CrowdStrike brings an action against Customer, then the governing law the laws of England and Wales,
The seat, or legal place, of arbitration shall be London, England.

3. For ONLY principal offices within Asia Pacific (including India), Australia & New Zealand:
Any Dispute shall be referred to and finally resolved by arbitration under the Rules of Conciliation and Arbitration of the International Chamber of Commerce in force on the date when the notice of arbitration is submitted in accordance with such Rules (which Rules are deemed to be incorporated by reference into this clause) on the basis that the governing law is as follows: (a) if Customer brings an action against CrowdStrike, then the governing law is the State of New York, USA, (b) if CrowdStrike brings an action against Customer, then the governing law is as follows: (i) for Customers in: (x) Asia Pacific (including India): the laws of England and Wales, (y) Australia and New Zealand: the laws of the State of New South Wales, Australia. In all cases, the seat, or legal place, of arbitration shall be Singapore.

4. For ONLY principal offices within the Americas, excluding North America:
Any Dispute shall be referred to and finally resolved by arbitration under International Dispute Resolution Procedures of the American Arbitration Association in force on the date when the notice of arbitration is submitted in accordance with such Procedures (which Procedures are deemed to be incorporated by reference into this clause) on the basis that the governing law is the law of the State of New York, USA. The seat, or legal place, of arbitration shall be New York, New York, USA.

Exhibit C
Additional or Different Terms That May Apply to Certain Customers

A. For Australian Consumers Only.

A.1. For Customers that are consumers under the Australian Consumer Law, the following provisions apply.

The benefits of the warranty in Section 8 Warranties & Disclaimer of this Agreement are in addition to any other rights and remedies in relation to the Offerings that Customer may be entitled to under Australian Consumer Law. Our goods and services come with guarantees that cannot be excluded under the Australian Consumer Law. For major failures with the service, you are entitled: (i) to cancel your service contract with us; and (ii) to a refund for the unused portion, or to compensation for its reduced value. You are also entitled to choose a refund or replacement for major failures with goods. If a failure with the goods or a service does not amount to a major failure, you are entitled to have the failure rectified in a reasonable time. If this is not done you are entitled to a refund for the goods and to cancel the contract for the service and obtain a refund of any unused portion. You are also entitled to be compensated for any other reasonably foreseeable loss or damage from a failure in the goods or service.

The warranties in this Agreement are provided by CrowdStrike, Inc. at 150 Mathilda Place, Sunnyvale California, USA. To file a claim under this limited warranty, Customers must contact CrowdStrike at support@crowdstrike.com. CrowdStrike shall be responsible for any costs Customer incurs in making a warranty claim under this Agreement.

A.2. For Customers that are consumers under the Australian Consumer Law, Section 12 Limited Liability shall be replaced in its entirety with the following:

TO THE MAXIMUM EXTENT PERMITTED BY APPLICABLE LAW, EXCEPT FOR LIABILITY FOR ANY AMOUNTS PAID OR PAYABLE TO THIRD PARTIES UNDER SECTION 9 (INDEMNIFICATION), CUSTOMER'S PAYMENT OBLIGATIONS, AND/OR ANY INFRINGEMENT OR MISAPPROPRIATION BY ONE PARTY OF THE OTHER PARTY'S INTELLECTUAL PROPERTY RIGHTS, NEITHER PARTY SHALL BE LIABLE TO THE OTHER PARTY IN CONNECTION WITH THIS AGREEMENT OR THE SUBJECT MATTER HEREOF (UNDER ANY THEORY OF LIABILITY, WHETHER IN CONTRACT, STATUTE, TORT (INCLUDING NEGLIGENCE), INDEMNITIES (OTHER THAN EXPRESSLY STATED IN SECTION 9 (INDEMNIFICATION)), OR OTHERWISE) FOR ANY LOST PROFITS, REVENUE, OR SAVINGS, LOST BUSINESS OPPORTUNITIES, LOST DATA, OR SPECIAL, INCIDENTAL, CONSEQUENTIAL, OR PUNITIVE DAMAGES, EVEN IF SUCH PARTY HAS BEEN ADVISED OF THE POSSIBILITY OF SUCH DAMAGES OR LOSSES OR SUCH DAMAGES OR LOSSES WERE REASONABLY FORESEEABLE; OR (B) AN AMOUNT THAT EXCEEDS THE TOTAL FEES PAID OR PAYABLE TO CROWDSTRIKE FOR THE RELEVANT OFFERING DURING THAT OFFERING'S SUBSCRIPTION/ORDER TERM. THESE LIMITATIONS WILL APPLY NOTWITHSTANDING ANY FAILURE OF ESSENTIAL PURPOSE OF ANY REMEDY SPECIFIED IN THIS AGREEMENT. MULTIPLE CLAIMS SHALL NOT EXPAND THE LIMITATIONS SPECIFIED IN THIS SECTION A2.

SECTION A.2 DOES NOT SEEK TO LIMIT OR EXCLUDE THE LIABILITY OF CROWDSTRIKE OR ITS AFFILIATES IN THE EVENT OF DEATH OR PERSONAL INJURY CAUSED BY ITS NEGLIGENCE OR FOR FRAUD OR FOR ANY OTHER LIABILITY FOR WHICH IT IS NOT PERMITTED BY LAW TO EXCLUDE. TO THE EXTENT APPLICABLE, THIS PROVISION MUST BE READ SUBJECT TO THE AUSTRALIAN CONSUMER LAW.

B. For Customers Outside the United States and Australia. Some countries, states and provinces, including member states of the European Economic Area, do not allow certain exclusions or limitations of liability, therefore, the exclusions or limitation of liabilities and disclaimers of warranties in the Agreement may not fully apply to Customer if the laws directly applicable to CrowdStrike in the performance of this Agreement do not allow such terms.

ROCKLIN
CALIFORNIA

City Council Staff Report

Subject: Comcate Contract for Access Rocklin

Date: February 25, 2025

Submitted By: Ruth Green, IT Manager
Daniel Choe, Administrative Services Deputy Director

Department: Administrative Services - IT

Recommendation:
Adopt a Resolution of the City Council of the City of Rocklin (City) Approving the License and Ongoing Support and Services Contract with Comcate Software Inc and Authorizing the City Manager to Execute the Contract.

Background:
The City of Rocklin currently utilizes Comcate's Customer Relationship Management (CRM) software enables City staff to manage citizen interactions, track service requests, and improve customer service. The City's implementation, branded "Access Rocklin," includes a public-facing portal that allows residents to report issues, provide feedback, and access relevant information. Additionally, the Comcate CRM includes a mobile app that enables residents to report issues conveniently from anywhere in the community using a smartphone. Automated workflows route service requests to the appropriate staff, ensuring efficient tracking from initiation to resolution, while robust reporting capabilities support data-driven decision-making. The Comcate Code Enforcement Software module is used by the Code Enforcement Division to manage code enforcement cases, track violations, and enhance compliance efforts. This module includes features such as quick case creation, one-click reporting, and automatic case notifications, which streamline case management and improve operational efficiency.

The Comcate contract is nearing expiration and requires renewal. Staff recommends a three-year, agreement in the amount of $148,377 to maintain this sole-source software, which can only be purchased and maintained by Comcate, as permitted by Rocklin Municipal Code Section 3.04.080.B, subject to City Council approval.

Fiscal Impact:
Sufficient funds are available in the Fiscal Year 2024/25 Operating Budget to support the proposed agreement. Funding for subsequent years will be contingent upon budget availability and approval in the applicable fiscal years.

ATTACHMENTS:

1. Resolution
2. Resolution Exhibit A - Agreement

RESOLUTION NO. 2025-

RESOLUTION OF THE CITY COUNCIL OF THE CITY OF ROCKLIN APPROVING THE LICENSE AND ONGOING SUPPORT AND SERVICES CONTRACT WITH COMCATE SOFTWARE INC AND AUTHORIZING THE CITY MANAGER TO EXECUTE THE CONTRACT

WHEREAS, the City of Rocklin (City) seeks a contract for renewal services with Comcate Software, Inc. (Comcate); and

WHEREAS, the City uses Comcate to enhance service delivery. The Access Rocklin CRM system manages citizen interactions, tracks service requests, and improves customer service through a public portal and mobile app. Automated workflows and reporting streamline operations. The Code Enforcement module optimizes case management with efficient tracking, quick case creation, and automated notifications; and

WHEREAS, the Comcate contract is nearing expiration and requires renewal. Staff recommends a three-year, $148,377 agreement to maintain this sole-source software, which can only be purchased and maintained by Comcate, as permitted by RMC Section 3.04.080.B, subject to City Council approval.

NOW, THEREFORE, the City Council of the City of Rocklin does resolve as follows:

Section 1. The license and ongoing support and services contract with Comcate Software Inc is hereby approved in substantially the form attached here to as Exhibit A, and the City Manager is authorized to execute the contract.

PASSED AND ADOPTED this 25th day of February, 2025 by the following vote:

AYES: Councilmembers:
NOES: Councilmembers:
ABSENT: Councilmembers:
ABSTAIN: Councilmembers:

_____
Jill Gayaldo, Mayor

ATTEST:

_____
Avinta Singh, City Clerk

Docusign Envelope ID: C78DF0EE-FA07-44B5-A0C8-77F33C2C25F8

CONTRACT FOR SERVICES

THIS CONTRACT is made on March 1, 2025, by and between the CITY OF ROCKLIN a municipal corporation ("City"), and Comcate Software, Inc., a California Corporation, ("Contractor"), who mutually agree as follows:

1. SCOPE OF SERVICES

Subject to the terms and conditions set forth in this Agreement, Contractor shall provide to the City the services described in the Scope of Work, Exhibit A. Contractor shall provide the services at the time, place and in the manner specified in Exhibits A and/or B. Contractor shall not be compensated for services outside the scope of Exhibit A unless prior to the commencement of the services: (a) Contractor notifies the City and City agrees the services are outside the scope of Exhibit A; (b) Contractor estimates the additional compensation required for these additional services; and (c) City after notice, approves in writing a supplemental agreement specifying the additional services and the amount of compensation therefore. City shall have no obligation whatsoever under this Agreement or any supplemental agreement, unless and until the agreement or supplemental agreement is approved by the City Manager, the City Manager's authorized designee, or by the Rocklin City Council, as required by the Rocklin Municipal Code or other local law or policy.

2. COMPENSATION

A. The City shall pay Contractor for the services rendered pursuant to this Agreement at the times and in the manner set forth in the Scope of Work, Exhibit A, the Schedule of Performance, Exhibit B, and in accordance with the Schedule of Fees in Exhibit C, but in no event shall the total compensation exceed the **total sum of One Hundred Forty-Eight Thousand, Three Hundred Seventy-Seven Dollars ($148,377)**. The payments specified in Exhibits C shall be the only payments to be made to Contractor for the services rendered pursuant to this Agreement unless pursuant to Section 1, above, City approves additional compensation for additional services.

B. Contractor shall furnish City with invoices for all expenses as well as for all materials authorized by this Contract. The invoices shall be submitted with the monthly billings. Reimbursable expenses shall be limited to actual expenditures of Contractor for expenses that are necessary for the proper completion of the services and shall only be payable if specifically authorized in advance by City.

C. Contractor shall submit all billings/invoices for services to City in the manner specified in Exhibit B. Contractor's fees shall be as specified in the Scope of Work, Exhibit A or the Schedule of Fees as set forth in Exhibit C. All invoices submitted by Contractor shall contain the following information:

i. Job/project name or description;

Docusign Envelope ID: C78DF0EE-FA07-44B5-A0C8-77F33C2C25F8

ii. City's current purchase order and/or work order number (if applicable);
iii. Contractor's invoice number;
iv. Date of invoice issuance;
v. Description of services billed under invoice, including the description of tasks performed and the corresponding rate charged for the completion of that task;
vi. Amount of invoice, itemizing all authorized reimbursable expenses; and
vii. Total billed to date under agreement.

D. City shall make payment to Contractor net 30 days from receipt of an acceptable invoice. If Contractor's performance is not in conformity with the Scope of Work, Exhibit A, or the Schedule of Performance, Exhibit B, or the provisions set forth above, payments may be delayed or denied, unless the Contractor's failure to perform is a documented result of the City's failure to conform with the Schedule of Performance, or if the Schedule of Performance is extended pursuant to Section 4. City shall not be responsible for delays in payment to Contractor resulting from Contractor's failure to comply with the invoice format described above, or as set forth in the Schedule of Performance.

E. During performance of the agreement and for a period of three (3) years after completing all services, Contractor shall maintain all accounting and financial records related to this Agreement, including but not limited to records of Contractor's costs for all services performed under this Agreement and records of Contractor's reimbursable expenses, in accordance with generally accepted accounting practices, and shall keep and make the records available for inspection and audit by representatives of the City upon reasonable written notice.

F. Contractor shall pay when and as due, any and all taxes incurred as a result of Contractor's compensation hereunder, including estimated taxes, and shall provide City with proof of payment upon request. Contractor hereby agrees to indemnify City for any claims, losses, costs, fees, liabilities, damages or injuries suffered by City arising out of Contractor's breach of this section.

3. FACILITIES AND EQUIPMENT

Contractor shall at its sole cost and expense, furnish all facilities and equipment that may be required for Contractor to perform services pursuant to this Agreement. City shall furnish to Contractor, only the facilities and equipment listed in Exhibit A (if any) according to any terms and conditions set forth in Exhibit A.

4. TERM OF CONTRACT

Docusign Envelope ID: C78DF0EE-FA07-44B5-A0C8-77F33C2C25F8

A. This Agreement shall become effective on the date that it is approved by both parties, set forth on the first page of the agreement and shall continue in effect until **February 28, 2028**, unless sooner terminated as provided herein.

B. The services of Contractor are to commence upon execution of this Contract and shall be undertaken and completed in accordance with the Schedule of Performance attached hereto and incorporated herein by this reference as **Exhibit B**.

5. SUSPENSION/TERMINATION

A. City shall have the right at any time to temporarily suspend Contractor's performance hereunder, in whole or in part, by giving written notice of suspension to Contractor. If City gives such notice, Contractor shall immediately suspend its activities under this Agreement.

B. This Contract may be terminated by either party, provided that the other party is given not less than thirty (30) calendar days' written notice (delivered by certified mail, return receipt requested) of intent to terminate. If the agreement is terminated by the City:

i. Contractor shall immediately cease rendering services pursuant to this Agreement;
ii. Contractor shall, not later than five days after such notice of termination, deliver to City copies of all information prepared pursuant to this Agreement;
iii. City shall pay Contractor the reasonable value of services rendered by Contractor prior to termination; provided however, City shall not in any manner be liable for lost profits that might have been made by Contractor had the agreement not been terminated or had Contractor completed the services required by this Agreement. Contractor shall furnish to City such financial information as in the judgment of the City is necessary for City to determine the reasonable value of the services rendered by Contractor. The foregoing is cumulative and does not affect any right or remedy that city may have in law or equity.

C. Notwithstanding any provisions of this Contract, Contractor shall not be relieved of liability to the City for damages sustained by the City by virtue of any breach of this Contract by Contractor, and the City may withhold any payments due to Contractor until such time as the exact amount of damages, if any, due the City from Contractor is determined.

6. INDEPENDENT CONTRACTOR

Contractor enters into this Contract as an independent contractor and not as an employee or agent of the City. Contractor shall have no power or authority by this Contract to act on

Docusign Envelope ID: C78DF0EE-FA07-44B5-A0C8-77F33C2C25F8

behalf of City in any capacity whatsoever as an agent, or to bind the City in any respect or to any obligations whatsoever. Nothing in this Contract shall be construed to be inconsistent with this relationship or status. All employees, agents, contractors or subcontractors hired or retained by the Contractor are employees, agents, contractors or subcontractors of the Contractor and not of the City. The City shall not be obligated in any way to pay any wage claims or other claims made against Contractor by any such employees, agents, contractors or subcontractors, or any other person resulting from performance of this Agreement.

7. AMENDMENTS, CHANGES OR MODIFICATIONS

Amendments, changes or modifications in the terms of this Contract may be made at any time by mutual written agreement between the parties hereto and shall be signed by the persons authorized to bind the parties hereto.

8. EXTENSIONS OF TIME

Contractor may, for good cause, request extensions of time to perform the services required hereunder. Such extensions shall be authorized in advance by the City in writing and shall be incorporated in written amendments to this Contract or the attached Work Program in the manner provided in Section 7.

9. PROPERTY OF CITY

It is mutually agreed that all materials prepared by the Contractor under this Contract shall become the property of the City, and the Contractor shall have no property right therein whatsoever. Immediately upon termination, the City shall be entitled to, and the Contractor shall deliver to the City, all data, drawings, specifications, reports, estimates, summaries and other such materials as may have been prepared or accumulated to date by the Contractor in performing this Contract which is not Contractor's privileged information, as defined by law, or Contractor's personnel information, along with all other property belonging exclusively to the City which is in the Contractor's possession.

10. COMPLIANCE WITH ALL LAWS

Contractor shall keep itself fully informed of, shall observe and comply with, and shall cause any and all persons, firms or corporations employed by it or under its control to observe and comply with, all applicable laws, ordinances, and codes of federal, State and local governments, which in any manner affect those engaged or employed on the work described by this Contract or the materials used or which in any way affect the conduct of the work, and shall commit no trespass on any public or private property in performing any of the work authorized by this Contract.

For all leases and purchases of materials, equipment, supplies or other tangible personal property used to perform the agreement and shipped from outside California, the Contractor and any subcontractors leasing or purchasing such materials, equipment,

Docusign Envelope ID: C78DF0EE-FA07-44B5-A0C8-77F33C2C25F8

supplies or other tangible personal property shall obtain a Use Tax Direct Payment Permit or Seller's Permit from the California State Board of Equalization, in accordance with the applicable SBE criteria and requirements. This provision applies in all instances unless prohibited by the funding source for the agreement.

11. WARRANTIES AND RESPONSIBILITIES - CONTRACTOR

A. Contractor agrees and represents that it is qualified to properly provide the services set forth in Exhibit A in a manner which is consistent with the generally accepted standards of Contractor's profession.

B. Contractor is duly licensed, qualified and experienced to perform the services set forth in the Scope of Services, Exhibit A. Contractor represents and warrants that Contractor has all licenses, permits, qualifications and approvals of whatsoever nature that are legally required for Contractor to practice its profession or provide any services under this Agreement. Contractor represents and warrants that Contractor shall, at its sole cost and expense, keep in effect or obtain at all times during the term of this Agreement, any licenses, permits and approvals that are legally required for Contractor to practice its profession or provide such services. If Contractor is an out of state corporation, Contractor further warrants and represents that it possesses a valid certification of qualification to transact business in the State of California issued by the California Secretary of State.

C. Contractor shall perform all services required pursuant to this Agreement in the manner and according to the standards currently observed by a competent practitioner of Contractor's profession in California. Contractor shall devote such time and effort to the performance of services pursuant to this Agreement as is necessary for the satisfactory and timely performance of Contractor's obligations under this Agreement. Neither party shall be considered in default of this Agreement to the extent that party's performance is prevented or delayed by any cause that is beyond the reasonable control of that party.

D. All products of whatsoever nature that Contractor delivers to City pursuant to this Agreement shall be prepared in a professional manner and conform to the standards of quality normally observed by a person currently practicing in Contractor's profession, and shall be provided in accordance with any scope of services or schedule of performance specified in Exhibits A or B.

E. Contractor shall assign only competent personnel to perform services pursuant to this Agreement. Contractor shall designate a project manager who at all times shall represent the Contractor before the City on all matters relating to this Contract. The project manager shall continue in such capacity unless and until he or she is removed at the request of the City, is no longer employed by Contractor, or is replaced with the written approval of the City, which approval shall not be unreasonably withheld. Contractor shall notify City in writing, of any other changes in Contractor's staff assigned to perform the services required under this Agreement, prior to any such performance. In the event the

Docusign Envelope ID: C78DF0EE-FA07-44B5-A0C8-77F33C2C25F8

City desires the removal of any person assigned by Contractor to perform services pursuant to this Agreement, because the City in its sole discretion, determines that such person is not performing in accordance with the standards required herein, Contractor shall remove such person immediately upon receiving notice from the City of the desire for the removal of such person.

F. Contractor agrees and represents that the work performed under this Contract shall be in accordance with applicable federal, State and local law.

G. Contractor shall provide corrective services without charge to the City for services which fail to meet the above professional and legal standards and which are reported to Contractor in writing within sixty (60) days of discovery. Should Contractor fail or refuse to perform promptly its obligations, the City may render or undertake performance thereof and the Contractor agrees it has satisfied itself by its own investigation and research regarding the conditions affecting the work to be done and labor and materials needed, and that its decision to execute this Agreement is based on such independent investigation and research. Contractor shall be liable for any expenses thereby incurred.

12. SUBCONTRACTING

None of the services covered by this Contract shall be subcontracted without the prior written consent of the City, which will not be unreasonably withheld. Contractor shall be as fully responsible to the City for the negligent acts and omissions of its contractors and subcontractors, and of persons either directly or indirectly employed by them, as it is for the negligent acts and omissions of persons directly employed by Contractor.

13. ASSIGNABILITY

Neither Agency's rights nor Agency's obligations arising under this Agreement are assignable or otherwise transferable by Agency (whether voluntarily or by operation of law) without the express written consent of Contractor, and any such prohibited assignment or transfer shall be void and without effect. If Contractor should so consent in writing, the assignee shall be bound by all of the terms and conditions of this Agreement. Contractor may assign any or all of its rights or obligations hereunder without the consent of Agency. Subject to the provisions of this term, this Agreement shall inure to the benefit of and be binding upon each of the parties hereto and their respective permitted successors and assigns.

14. INTEREST IN CONTRACT

Contractor covenants that neither it, nor any of its employees, agents, contractors, or subcontractors has any interest, nor shall they acquire any interest, direct or indirect, in the subject of the Contract, nor any other interest which would conflict in any manner or degree with the performance of its services hereunder. Contractor shall make all disclosures required by the City's conflict of interest code in accordance with the category designated by the City, unless the City Manager determines in writing that Contractor's

Docusign Envelope ID: C78DF0EE-FA07-44B5-A0C8-77F33C2C25F8

duties are more limited in scope than is warranted by the category designated by the City code and that a narrower disclosure category should apply. Contractor also agrees to make disclosure in compliance with the City conflict of interest code if, at any time after the execution of this Contract, City determines and notifies Contractor in writing that Contractor's duties under this Contract warrant greater disclosure by Contractor than was originally contemplated. Contractor shall make disclosures in the time, place and manner set forth in the conflict of interest code and as directed by the City.

15. MATERIALS CONFIDENTIAL

To the extent permitted by law, all of the materials prepared or assembled by Contractor pursuant to performance of this Contract are confidential and Contractor agrees that they shall not be made available to any individual or organization without the prior written approval of the City, except by court order.

16. LIABILITY OF CONTRACTOR-NEGLIGENCE

Contractor shall be responsible for performing the work under this Contract in a manner which is consistent with the generally-accepted standards of the Contractor's profession and shall be liable for its own negligence and the negligent acts of its employees, agents, contractors and subcontractors. The City shall have no right of control over the manner in which the work is to be done but only as to its outcome, and shall not be charged with the responsibility of preventing risk to Contractor or its employees, agents, contractors or subcontractors.

17. INDEMNITY AND LITIGATION, COSTS

A. Agency Indemnification of Comcate: Agency shall defend, indemnify, and hold harmless Comcate, its officers, directors, employees, and agents from and against any claims, damages, losses, and expenses (including reasonable attorneys' fees) to the extent arising out of Agency's material breach of this Agreement.

B. Comcate Indemnification of Agency: Comcate shall defend, indemnify, and hold harmless the Agency, its officers, officials, agents, and employees from and against any claims, damages, losses, and expenses (including reasonable attorneys' fees) to the extent arising out of:

- Comcate's material breach of this Agreement; Comcate's gross negligence or willful misconduct; or Unauthorized disclosure or misuse of Agency data, except where caused by Agency's negligence or failure to follow agreed-upon security protocols.

C. Good Faith Resolution Before Indemnification: The parties agree to first engage in good faith discussions to resolve any indemnifiable claims before

seeking formal indemnification. If a resolution cannot be reached within 60 days of written notice, indemnification obligations shall apply.

D. Liability Cap & Insurance Alignment

- Each party's indemnification obligations shall be capped at the total fees paid under this Agreement in the 12 months preceding the claim, except in cases of:
  - Willful misconduct, or liabilities that are covered by applicable insurance policies (but not claims that are covered by City's self-insured retention fund).

E. Survival & Mutual Cooperation

- Indemnification obligations shall survive termination of this Agreement.
- Both parties agree to cooperate in mitigating losses and handling claims to reduce unnecessary legal costs.

18. CONTRACTOR TO PROVIDE INSURANCE

Contractor agrees to have and maintain the policies set forth below, against claims for injuries to persons or damages to property which may arise from or in connection with the performance of the work hereunder by the Contractor, its agents, representatives, or employees. All policies, endorsements, certificates, and/or binders shall be subject to approval by the City as to form and content. A lapse in any required insurance coverage during this Agreement shall be a breach of this Agreement.

A. **Minimum Scope and Limit of Insurance**

i. **Commercial General Liability (CGL)**: Insurance Services Office Form CG 00 01 covering CGL on an "occurrence" basis, including products and completed operations, property damage, bodily injury and personal & advertising injury with limits no less than $2,000,000 per occurrence. If a general aggregate limit applies, either the general aggregate limit shall apply separately to this project/location (ISO CG 25 03 or 25 04) or the general aggregate limit shall be twice the required occurrence limit.

ii. **Automobile Liability**: Insurance Services Office Form Number CA 00 01 covering any auto (Code 1), or if Contractor has no owned autos, covering hired (Code 8) and non-owned autos (Code 9), with limit no less than $1,000,000 per accident for bodily injury and property damage.

iii. **Workers' Compensation** as required by the State of California, with Statutory Limits and Employer's Liability Insurance with limit of no less than $1,000,000 per accident for bodily injury or disease. If Contractor has no

employees, Contractor must notify City if an employee is hired, verify proof of coverage for any subcontractors, and agrees to hold City harmless and defend City from claims arising from failure to provide workers' compensation benefits.

iv. **Professional Liability (Errors and Omissions)**: Insurance appropriate to the Contractor's profession, with limit no less than $2,000,000 per occurrence or claim, $2,000,000 aggregate. Professional liability coverage shall extend for at least five years after completion of the Contractor's services under this Agreement.

If the Contractor maintains broader coverage and/or higher limits than the minimums shown above, the City requires and shall be entitled to the broader coverage and/or the higher limits maintained by the Contractor. Any available insurance proceeds in excess of the specified minimum limits of insurance and coverage shall be available to the City.

B. **Other Insurance Provisions**

The insurance policies are to contain, or be endorsed to contain, the following provisions:

i. **Additional Insured Status**. The City, its officers, officials, employees, and volunteers are to be covered as additional insureds on the CGL policy with respect to liability arising out of work or operations performed by or on behalf of the Contractor including materials, parts, or equipment furnished in connection with such work or operations. General liability coverage can be provided in the form of an endorsement to the Contractor's insurance (at least as broad as ISO Form CG 20 10 11 85 or both CG 20 10, CG 20 26, CG 20 33, or CG 20 38; <u>and</u> CG 20 37 forms if later revisions used).

ii. **Primary Coverage**. For any claims related to this Contract, the Contractor's insurance coverage shall be primary insurance coverage at least as broad as ISO CG 20 01 04 13 as respects the City, its officers, officials, employees, or volunteers. Any insurance or self-insurance maintained by the City, its officers, officials, employees or volunteers shall be excess of the Contractor's insurance and shall not contribute with it.

iii. **Umbrella or Excess Policy**. The Contractor may use Umbrella or Excess Policies to provide the liability limits as required in this Agreement. This form of insurance will be acceptable provided that all of the Primary and Umbrella or Excess Policies shall provide all of the insurance coverages herein required, including, but not limited to, primary and non-contributory, additional insured, Self-Insured Retentions (SIRs), indemnity, and defense requirements. The Umbrella or Excess Policies shall be provided on a true "following form" or broader coverage basis, with coverage at least as broad as provided on the underlying Commercial General Liability insurance. No insurance policies maintained by the Additional

Docusign Envelope ID: C78DF0EE-FA07-44B5-A0C8-77F33C2C25F8

Insureds, whether primary or excess, and which also apply to a loss covered hereunder, shall be called upon to contribute to a loss until the Contractor's primary and excess liability policies are exhausted.

iv. **Notice of Cancelation**. Each insurance policy required above shall provide that coverage shall not be canceled, except with 30 days' notice to the City, with ten days' for notice of cancelation due to non-payment.

v. **Waiver of Subrogation**. Contractor hereby grants to City a waiver of any right to subrogation which any insurer of said Contractor may acquire against the City by virtue of the payment of any loss under such insurance. Contractor agrees to obtain any endorsement that may be necessary to affect this waiver of subrogation, but this provision applies regardless of whether or not the City has received a waiver of subrogation endorsement from the insurer.

vi. **Self-Insured Retentions**. Self-insured retentions must be declared to and approved by the City. The City may require the Contractor to purchase coverage with a lower retention or provide proof of ability to pay losses and related investigations, claim administration, and defense expenses within the retention. The policy language shall provide, or be endorsed to provide, that the self-insured retention may be satisfied by either the named insured or City.

vii. **Acceptability of Insurers**. Insurance is to be placed with insurers authorized to conduct business in the state with a current A.M. Best's rating of no less than A:VII, unless otherwise acceptable to the City.

viii. **Claims Made Policies**. If any of the required policies for professional liability insurance provide claims-made coverage:

a. The Retroactive Date must be shown and must be before the date of the Contract or the beginning of contract work.

b. Insurance must be maintained and evidence of insurance must be provided for at least five (5) years after completion of contract work.

c. If coverage is canceled or non-renewed, and not replaced with another claims-made policy form with a Retroactive Date prior to the contract effective date, the Contractor must purchase "extended reporting" coverage for a minimum of five (5) years after completion of contract work.

ix. **Verification of Coverage**. Contractor shall furnish the City with original Certificate of Insurance including all required amendatory endorsements (or copies of the applicable policy language effecting coverage required by this clause) and a copy of the Declarations and Endorsement Page of the CGL policy

listing all policy endorsements to the City before work begins. However, failure to obtain the required documents prior to the work beginning shall not waive the Contractor's obligation to provide them. The City reserves the right to require complete, certified copies of all required insurance policies, including endorsements required by these specifications, at any time.

x. **Subcontractors**. Contractor shall require and verify that all subcontractors maintain insurance meeting all the requirements stated herein, and Contractor shall ensure that City is an additional insured on insurance required from subcontractors.

xi. **Special Risks or Circumstances**. City reserves the right to modify these requirements, including limits, based on the nature of the risk, prior experience, insurer, coverage, or other special circumstances.

19. GENERAL/MISCELLANEOUS PROVISIONS

A. **Contract Documents**. This Agreement and its exhibits shall be known as the "Contract Documents." Terms set forth in any Contract Document shall be deemed to be incorporated in all Contract Documents as if set forth in full therein. In the event of conflict between terms contained in these Contract Documents, the more specific term shall control. If any portion of the Contract Documents shall be in conflict with any other portion, provisions contained in the Contract shall govern over conflicting provisions contained in the exhibits to the Contract. In the event of any conflict between the terms or conditions of this written Agreement and any terms or conditions of any document prepared or provided by Contractor and made a part of this Agreement, including without limitation any document relating to the scope of services or payment therefor, the written terms of this document shall control over those terms or conditions.

B. **Non-Discrimination in Employment and Equal Employment Opportunity**. Contractor shall not engage in unlawful employment discrimination. Such unlawful employment discrimination includes, but is not limited to, employment discrimination based upon a person's race, color, ancestry, national origin, religious creed, sex (including pregnancy, childbirth breastfeeding or related medical condition), sexual orientation, gender, gender identity, gender expression and age (over 40), disability (mental and physical), medical condition, marital status, citizenship, and military and veteran status.

C. **Inspection of Records**. Contractor shall maintain and make available for inspection by the City and its auditors accurate records of all of its costs, disbursements and receipts with respect to any work under this Contract. Such inspections may be made during regular office hours at any time until six (6) months after the final payments under this Contract are made to the Contractor.

D. **Entire Agreement**. This Contract constitutes the entire agreement between the parties relative to the services specified herein and supersedes whatever oral or

Docusign Envelope ID: C78DF0EE-FA07-44B5-A0C8-77F33C2C25F8

written understanding they may have had prior to the execution of this Agreement. No alteration or modification of this Agreement shall be valid or effective unless and until such modification is evidenced by a writing signed by both parties to this Contract, by persons authorized to act on behalf of the parties. There are no understandings, agreements, conditions, representations, warranties or promises, with respect to this Contract, except those contained in or referred to in the writing.

E. **Severability**. If any portion of this Agreement or the application thereof to any person or circumstance shall be held invalid or unenforceable, the remainder of this Agreement shall not be affected thereby and shall be enforced to the greatest extent permitted by law.

F. **Waiver**. Neither City's acceptance of, or payment for, any service performed by Contractor, nor any waiver by either party of any default, breach, or condition precedent, shall be construed as a waiver of any provision of this Agreement, nor as a waiver of any other default, breach or condition precedent or any other right hereunder.

G. **Notice**. All notices that are required to be given by one party to the other under this Contract shall be in writing and shall be deemed to have been given if delivered personally or enclosed in a properly addressed envelope and deposited in a United States Post Office for delivery by registered or certified mail addressed to the parties at the following addresses:

City: City of Rocklin
Information Technology Division
4081 Alvis Court
Rocklin, CA 95677

City of Rocklin
Office of the City Attorney
3970 Rocklin Road
Rocklin, CA 95677

Contractor: Comcate Software, Inc.
9450 SW Gemini Dr
Suite 61173
Beaverton, Oregon 97008-7105 US

H. **Enforcement of Agreement**. This Contract shall be interpreted, governed and enforced in accordance with the laws of the State of California. Venue of any action arising out of this Contract shall be brought and maintained in Placer County California, regardless of where else venue may lie. The parties consent to jurisdiction over their persons and over the subject matter of any such litigation in such court, and consent to service of process issued by such courts.

Docusign Envelope ID: C78DF0EE-FA07-44B5-A0C8-77F33C2C25F8

I. **Attorney's Fees**. In any action brought by either party to enforce the terms of this Contract, each party shall bear responsibility for its attorney's fees and all costs regardless of whether one party is determined to be the prevailing party.

J. **Power and Authority to Enter into Agreement**. All parties to this Agreement warrant and represent that they have the power and authority to enter into this Agreement in the names, titles, and capacities herein stated and on behalf of any entities, persons, or firms represented or purported to be represented by such entity(ies), person(s), or firm(s) and that all formal requirements necessary or required by any state and/or federal law in order to enter into this Agreement have been fully complied with. Furthermore, by entering into this Agreement, Contractor hereby warrants that it shall not have breached the terms or conditions of any other contract or agreement to which Contractor is obligated, which breach would have a material effect hereon.

K. **Counterparts; Electronic Signatures**. This Agreement may be executed in two or more counterparts, each of which when so executed shall be deemed to be an original and all of which when taken together shall constitute one and the same instrument. The words "execution," "signed," "signature," and words of like import in this Agreement or in any other certificate, agreement or document related to this Agreement, shall include digital electronic signatures (DocuSign). The use of digital electronic signatures and electronic records (including, without limitation, any contract or other record created, generated, sent, communicated, received, or stored by electronic means) shall be of the same legal effect, validity and enforceability as a manually executed signature or use of a paper-based record-keeping system to the fullest extent permitted by applicable law.

L. **Exhibits**. All exhibits referred to herein and attached hereto, are by this reference incorporated as if set forth fully herein.

CONTRACTOR

DocuSigned by:
By: Dave Richmond
FC9C58B2C41E4BE...
David Richmond, CEO

Signed by:
By: Raja Kapadia
BB3C329E5F61464...
Raja Kapadia, Secretary

CITY OF ROCKLIN

By: _____
Aly Zimmermann, City Manager

Docusign Envelope ID: C78DF0EE-FA07-44B5-A0C8-77F33C2C25F8

ATTEST:

By: _____
Avinta Singh, City Clerk

APPROVED AS TO FORM:

By: Signed by: Crystal Hodgson C832E0B7CE22470...
Crystal Hodgson, Assistant City Attorney

EXHIBIT A

Scope of Work

The Contractor shall supply the City with Customer Relationship Management (CRM) 311 and Code Enforcement Manager (CEM) cloud-based software, which includes the following Core Products:

Core Products	
eFeedbackManager (CRM) and Responsive Mobile Web App	eFeedbackManager (eFM) is a customer service software tool which provides comprehensive tracking, routing and analysis of customer communications (web portal, mobile devices, email, postal mail, phone, walk-ins). eFM provides web-input for customers via the Agency's website.
Code Enforcement Manager (CEM)	Comcate provides a best in class Code Enforcement Case Management System that is fully integrated with our CRM product. The Agency has used Comcate's Code Enforcement Manager for years and our project plan will include a full upgrade and migration of configurations and case data to our newest product version.
GIS Lite - Mapping and Address Validation	GIS Lite module leveraging address verification, association of property with cases, viewing of activity on maps, and allows the tabular reports of activity by neighborhood.
Citizen Mobile App	Provide native mobile apps to download in Apple Store and Google Play Store

Docusign Envelope ID: C78DF0EE-FA07-44B5-A0C8-77F33C2C25F8

EXHIBIT B

Schedule of Performance

Ongoing Support and Services

During implementation of Comcate Software, Contractor shall introduce City staff to experienced and capable in-house customer support staff.

Contractor shall maintain hours necessary to support City's use of licensed products listed in Exhibit A at the services levels listed in the table below. Contractor shall make customer service technicians available during normal business hours from 8am to 5:00pm PST Monday through Friday. Contractor team members shall be available during business hours via email and phone and shall respond to City issues within 4-6 hours.

Contractor shall adhere to the following performance standards and response times:

Contractor shall make arrangements for the technology to be accessible by the City's staff and public users 99.8% of the time, not counting scheduled maintenance for users of Contractor's ASP service.

Service Level Table

Level	Description	Response Time	Means of Contact
First	Software System Inoperable	Response within 3 hours	Telephone, email, pager/mobile phone
Second	Significant operating issues but application still operating	Response with 6 hours	Telephone, e-mail
Third	Application not functioning as designed but still operating successfully	Response with 18 hours	Telephone, e-mail
Third	Non-critical problems for which a solution is	These issues will be addressed as part of the product development cycle	Telephone, e-mail

Support includes the following:

1. Trouble-shooting at Comcate's facilities
2. Establishment of an FAQ for customers
3. On-line help windows including comprehensive Customer Knowledge Base*

Docusign Envelope ID: C78DF0EE-FA07-44B5-A0C8-77F33C2C25F8

EXHIBIT C

Schedule of Fees

		Year 1	Year 2	Year 3
Renewal Date		**3/1/2025**	**3/1/2026**	**3/1/2027**
Product				
	Mobile Citizen	$3,986	$4,105	$4,228
	CEM	$14,038	$14,459	$14,893
	eFM	$25,248	$26,006	$26,786
	GIS Lite	$1,200	$1,236	$1,273
	Investment in client		-$1,200	-$2,400
	Total	$48,608	$49,839	$49,930

* Annual License Fees for Years 2 and 3 shown above already include a 3% per year adjustment for COLA. Fees due under this Agreement shall not exceed the total listed above for each year of service. Total compensation due under this Agreement shall not exceed the total sum of One Hundred Forty-Eight Thousand Three Hundred Seventy-Seven Dollars ($148,377).

Docusign Envelope ID: C78DF0EE-FA07-44B5-A0C8-77F33C2C25F8

EXHIBIT D

CERTIFICATE OF COMPLIANCE WITH LABOR CODE § 3700
[Labor Code § 1861]

I am aware of the provisions of Section 3700 of the Labor Code which require every employer to be insured against liability for workers' compensation or to undertake self-insurance in accordance with the provisions of that code, and I will comply with such provisions before commencing the performance of the work of this Contract.

CONTRACTOR

By: DocuSigned by: Dave Richmond FC0C59B2C41E4BE...
David Richmond, CEO

ROCKLIN
CALIFORNIA

City Council Staff Report

Subject: Contract for Tyler Technologies Munis Enterprise Resource Planning (ERP) Solution

Date: February 25, 2025

Submitted By: Ruth Green, IT Manager
Daniel Choe, Administrative Services Deputy Director

Department: Administrative Services - IT

Recommendation:
Adopt a Resolution of the City Council of the City of Rocklin Approving and Authorizing the City Manager to Execute a Maintenance Agreement with Tyler Technologies, Inc.

Background:

The City utilizes the Tyler Technologies Munis Enterprise Resource Planning (ERP) solution. The contract for services with Tyler Technologies ensures the City retains its secure financial management solution, designed exclusively for the public sector. The Munis ERP is a solution that integrates financials, payroll, human resources, purchasing, fixed assets, revenue streams, and civic services. It includes various modules and functionalities that enable departments to monitor key business intelligence, identify year-over-year trends, track workflows, and access real-time data, ensuring accurate reporting and budget forecasting for informed strategic decision-making.

The current contract with Tyler Technologies is nearing expiration and requires renewal. Staff recommends entering into a new five-year agreement, paid annually, to ensure continued use of this essential sole-source software, which can only be purchased and maintained by Tyler Technologies. The City has relied on Tyler Technologies for more than a decade to support critical operations. Therefore, staff further recommends suspending competitive bidding pursuant to Rocklin Municipal Code Title 3, Section 3.04.090.B. The total contract amount is $592,869, and the attached Resolution (Attachment 1) authorizes the City Manager to execute the agreement.

Fiscal Impact:
Sufficient funds are available in the Fiscal Year 2024/25 Operating Budget to cover the cost of the proposed agreement. Funding for subsequent years will be contingent upon budget availability and approval in the applicable fiscal years.

ATTACHMENTS:

1. Resolution
2. Resolution Exhibit A - Agreement

RESOLUTION NO. 2025-

RESOLUTION OF THE CITY COUNCIL OF THE CITY OF ROCKLIN APPROVING AND AUTHORIZING THE CITY MANAGER TO EXECUTE A MAINTENANCE AGREEMENT WITH TYLER TECHNOLOGIES, INC.

WHEREAS, the City of Rocklin (City) utilizes the Tyler Technologies Munis Enterprise Resource Planning (ERP) solution, which integrates financials, payroll, human resources, purchasing, fixed assets, revenue streams, and civic services; and

WHEREAS, the current contract is nearing expiration, and to ensure continued use of this essential ERP solution, staff recommends entering into a new five-year (5) maintenance services agreement with Tyler Technologies, Inc for a total amount of $592,869; and

WHEREAS, staff further recommends authorizing the City Manager to execute the said agreement.

NOW, THEREFORE, the City Council of the City of Rocklin does resolve as follows:

Section 1. The Maintenance Services Agreement with Tyler Technologies, Inc. for the Tyler Technology Enterprise ERP solution is hereby approved in substantially the form attached hereto as Exhibit A, and the City Manager is authorized to execute the Agreement.

PASSED AND ADOPTED this 25th day of February, 2025 by the following vote:

AYES: Councilmembers:
NOES: Councilmembers:
ABSENT: Councilmembers:
ABSTAIN: Councilmembers:

_____
Jill Gayaldo, Mayor

ATTEST:

_____
Avinta Singh, City Clerk

LICENSE AND SERVICES AGREEMENT

This License and Services Agreement is made between Tyler Technologies, Inc. and Client.

WHEREAS, Client and Tyler were parties to an agreement dated March 24, 2020 (the "License Agreement"), under which Tyler granted Client a limited license to the Tyler Software known as Enterprise Resource Planning (fka Munis);

WHEREAS, under the License Agreement Client's perpetual licenses to the Tyler Software listed above are fully paid for;

WHEREAS, under the License Agreement Tyler also provided Client maintenance and support services, subject to annual maintenance and support fees;

WHEREAS, Tyler and Client desire to terminate the License Agreement and replace it with this Agreement effective March 16, 2025, to restate the terms of its license grant and, on a term beginning March 16, 2025, for Tyler to provide and Client to receive and pay for continued maintenance and support services from Tyler as set forth in the Investment Summary under the terms of this Agreement;

NOW THEREFORE, in consideration of the foregoing and of the mutual covenants and promises set forth in this Agreement, Tyler and Client agree as follows:

SECTION A – DEFINITIONS

- **"Agreement"** means this License and Services Agreement.
- **"Business Travel Policy"** means our business travel policy. A copy of our current Business Travel Policy is attached as Schedule 1 to Exhibit B.
- **"Client**" means the City of Rocklin, California.
- **"Defect"** means a failure of the Tyler Software to substantially conform to the functional descriptions set forth in our written proposal to you, or their functional equivalent. Future functionality may be updated, modified, or otherwise enhanced through our maintenance and support services, and the governing functional descriptions for such future functionality will be set forth in our then-current Documentation.
- **"Defined Named Users"** means the maximum number of named users that are authorized to use the Enterprise Permitting & Licensing labeled modules identified in the Investment Summary, if any.
- **"Developer"** means a third party who owns the intellectual property rights to Third Party Software.
- **"Documentation"** means any online or written documentation related to the use or functionality of the Tyler Software that we provide or otherwise make available to you, including instructions, user guides, manuals and other training or self-help documentation.
- **"Effective Date"** means March 16, 2025.

- **"Force Majeure"** means an event beyond the reasonable control of you or us, including, without limitation, governmental action, war, riot or civil commotion, fire, natural disaster, or any other cause that could not with reasonable diligence be foreseen or prevented by you or us.
- **"Investment Summary"** means the agreed upon cost proposal for the software, products, and services attached as Exhibit A.
- **"Invoicing and Payment Policy"** means the invoicing and payment policy. A copy of our current Invoicing and Payment Policy is attached as Exhibit B.
- **"Maintenance and Support Agreement"** means the terms and conditions governing the provision of maintenance and support services to all of our customers. A copy of our current Maintenance and Support Agreement is attached as Exhibit C.
- **"Order Form"** means an ordering document that includes a quote or investment summary and specifying the items to be provided by Tyler to Client, including any addenda and supplements thereto.
- **"Support Call Process"** means the support call process applicable to all of our customers who have licensed the Tyler Software. A copy of our current Support Call Process is attached as Schedule 1 to Exhibit C.
- **"Third Party Hardware"** means the third party hardware, if any, identified in the Investment Summary.
- **"Third Party Products"** means the Third Party Software and Third Party Hardware.
- **"Third Party SaaS Services"** means software as a service provided by a third party, if any, identified in the Investment Summary.
- **"Third Party Services"** means the third party services, if any, identified in the Investment Summary.
- **"Third Party Software"** means the third party software, if any, identified in the Investment Summary.
- **"Third Party Terms"** means, if any, the end user license agreement(s) or similar terms for the Third Party Products or other parties' products or services, as applicable, and attached as indicated at Exhibit D.
- **"Tyler"** means Tyler Technologies, Inc., a Delaware corporation.
- **"Tyler Software"** means our proprietary software, including any integrations, custom modifications, and/or other related interfaces identified in the Investment Summary and licensed by us to you through this Agreement.
- **"we", "us", "our"** and similar terms mean Tyler.
- **"you"** and similar terms mean Client.

SECTION B – SOFTWARE LICENSE

1. License Grant and Restrictions.

   1.1 We continue to grant to you a license to use the Tyler Software for your internal business purposes only, in the scope of the internal business purposes disclosed to us as of the Effective Date. You may make copies of the Tyler Software for backup and testing purposes, so long as such copies are not used in production and the testing is for internal use only. Your rights to use the Tyler Software are perpetual but may be revoked if you do not comply with the terms of this Agreement.

   1.2 Without limiting the terms of Section 2.1, you understand and agree that the Tyler Software set

forth in the Investment Summary as subscription or software as a service ("SaaS") do not include perpetual rights. If you do not pay the required annual fee in accordance with the Invoicing and Payment Policy, your right to use the applicable Software will be suspended unless and until payment in full has been made. Tyler Software provided as SaaS is subject to the Tyler SaaS Services Terms and Service Level Agreement found here: https://www.tylertech.com/terms/tyler-saas-services.

1.3 The Documentation is licensed to you and may be used and copied by your employees for internal, non-commercial reference purposes only.

1.4 You may not: (a) transfer or assign the Tyler Software to a third party; (b) reverse engineer, decompile, or disassemble the Tyler Software; (c) rent, lease, lend, or provide commercial hosting services with the Tyler Software; or (d) publish or otherwise disclose the Tyler Software or Documentation to third parties.

1.5 The license terms in this Agreement apply to updates and enhancements we may provide to you or make available to you through your Maintenance and Support Agreement.

1.6 The right to transfer the Tyler Software to a replacement hardware system is included in your license. You will give us advance written notice of any such transfer and will pay us for any required or requested technical assistance from us associated with such transfer.

1.7 Where applicable with respect to our applications that take or process card payment data, we are responsible for the security of cardholder data that we possess, including functions relating to storing, processing, and transmitting of the cardholder data and affirm that, as of the Effective Date, we comply with applicable requirements to be considered PCI DSS compliant and have performed the necessary steps to validate compliance with the PCI DSS. We agree to supply the current status of our PCI DSS compliance program in the form of an official Attestation of Compliance, which can be found at https://www.tylertech.com/about-us/compliance, and in the event of any change in our status, will comply with applicable notice requirements.

1.8 We reserve all rights not expressly granted to you in this Agreement. The Tyler Software and Documentation are protected by copyright and other intellectual property laws and treaties. We own the title, copyright, and other intellectual property rights in the Tyler Software and the Documentation. **The Tyler Software is licensed, not sold.**

2. License Fees. There shall be no further license fees owed by you for the Tyler Software you licensed purchased under the Initial Agreement. Should you license additional Tyler Software through this Agreement or by subsequent amendment thereto, you agree to pay us the license fees in the amounts set forth in the applicable Investment Summary. Those amounts are payable in accordance with our Invoicing and Payment Policy.

3. Limited Warranty. We warrant that the Tyler Software will be without Defect(s) as long as you have a Maintenance and Support Agreement in effect. If the Tyler Software does not perform as warranted, we will use all reasonable efforts, consistent with industry standards, to cure the Defect as set forth in the Maintenance and Support Agreement.

SECTION C – PROFESSIONAL SERVICES

1-A. The parties acknowledge that, as of the Effective Date, this Agreement does not include professional services. If professional services are sought in the future, they will be subject to the terms and conditions of this Section C as well as the remainder of this Agreement:

1. Services. We will provide you the various implementation-related services itemized in the Investment Summary and the applicable Statement of Work, if any.

2. Professional Services Fees. You agree to pay us the professional services fees in the amounts set forth in the Investment Summary. Those amounts are payable in accordance with our Invoicing and Payment Policy. You acknowledge that the fees stated in the Investment Summary are good-faith estimates of the amount of time and materials required for your implementation. We will bill you the actual fees incurred based on the in-scope services provided to you. Any discrepancies in the total values set forth in the Investment Summary will be resolved by multiplying the applicable hourly rate by the quoted hours.

3. Additional Services. The Investment Summary contains the scope of services and related costs (including programming and/or interface estimates) required for the project based on our understanding of the specifications you supplied. If additional work is required, or if you use or request additional services, we will provide you with an addendum or change order, as applicable, outlining the costs for the additional work. The price quotes in the addendum or change order will be valid for thirty (30) days from the date of the quote.

4. Cancellation. If you cancel services less than four (4) weeks in advance (other than for Force Majeure or breach by us), you will be liable for all (a) daily fees associated with cancelled professional services if we are unable to reassign our personnel and (b) any non-refundable travel expenses already incurred by us on your behalf. We will make all reasonable efforts to reassign personnel in the event you cancel within four (4) weeks of scheduled commitments.

5. Services Warranty. We will perform the services in a professional, workmanlike manner, consistent with industry standards. In the event we provide services that do not conform to this warranty, we will re-perform such services at no additional cost to you.

6. Site Access and Requirements. At no cost to us, you agree to provide us with full and free access to your personnel, facilities, and equipment as may be reasonably necessary for us to provide implementation services, subject to any reasonable security protocols or other written policies provided to us as of the Effective Date, and thereafter as mutually agreed to by you and us. You further agree to provide a reasonably suitable environment, location, and space for the installation of the Tyler Software and any Third Party Products, including, without limitation, sufficient electrical circuits, cables, and other reasonably necessary items required for the installation and operation of the Tyler Software and any Third Party Products.

7. Client Assistance. You acknowledge that the implementation of the Tyler Software is a cooperative process requiring the time and resources of your personnel. You agree to use all reasonable efforts to cooperate with and assist us as may be reasonably required to meet the agreed upon project deadlines and other milestones for implementation. This cooperation includes at least working with us to schedule the implementation-related services outlined in this Agreement. We will not be liable

for failure to meet any deadlines and milestones when such failure is due to Force Majeure or to the failure by your personnel to provide such cooperation and assistance (either through action or omission).

8. Background Checks. For at least the past twelve (12) years, all of our employees have undergone criminal background checks prior to hire. All employees sign our confidentiality agreement and security policies.

SECTION D – MAINTENANCE AND SUPPORT

If you have purchased ongoing maintenance and support services, and continue to make timely payments for them according to our Invoicing and Payment Policy, we will provide you with maintenance and support services for the Tyler Software under the terms of our standard Maintenance and Support Agreement.

If you have opted not to purchase ongoing maintenance and support services for the Tyler Software, the Maintenance and Support Agreement does not apply to you. Instead, you will only receive ongoing maintenance and support on the Tyler Software on a time and materials basis. In addition, you will:

(i) receive the lowest priority under our Support Call Process;
(ii) be required to purchase new releases of the Tyler Software, including fixes, enhancements and patches;
(iii) be charged our then-current rates for support services, or such other rates that we may consider necessary to account for your lack of ongoing training on the Tyler Software;
(iv) be charged for a minimum of two (2) hours of support services for every support call; and
(v) not be granted access to the support website for the Tyler Software or the Tyler Community Forum.

SECTION E – THIRD PARTY PRODUCTS

To the extent there are any Third Party Products set forth in the Investment Summary, the following terms and conditions will apply:

1. Third Party Hardware. We will sell, deliver, and install onsite the Third Party Hardware, if you have purchased any, for the price set forth in the Investment Summary. Those amounts are payable in accordance with our Invoicing and Payment Policy.

2. Third Party Software. Upon payment in full of the Third Party Software license fees, you will receive a non-transferable license to use the Third Party Software and related documentation for your internal business purposes only. Your license rights to the Third Party Software will be governed by the Third Party Terms.

   2.1 We will install onsite the Third Party Software. The installation cost is included in the installation fee in the Investment Summary.

2.2 If the Developer charges a fee for future updates, releases, or other enhancements to the Third Party Software, you will be required to pay such additional future fee.

2.3 The right to transfer the Third Party Software to a replacement hardware system is governed by the Developer. You will give us advance written notice of any such transfer and will pay us for any required or requested technical assistance from us associated with such transfer.

3. Third Party Products Warranties.

3.1 We are authorized by each Developer to grant or transfer the licenses to the Third Party Software.

3.2 The Third Party Hardware will be new and unused, and upon payment in full, you will receive free and clear title to the Third Party Hardware.

3.3 You acknowledge that we are not the manufacturer of the Third Party Products. We do not warrant or guarantee the performance of the Third Party Products. However, we grant and pass through to you any warranty that we may receive from the Developer or supplier of the Third Party Products.

4. Third Party Services. If you have purchased Third Party Services, those services will be provided independent of Tyler by such third-party at the rates set forth in the Investment Summary and in accordance with our Invoicing and Payment Policy.

5. Maintenance. If you have a Maintenance and Support Agreement in effect, you may report defects and other issues related to the Third Party Software directly to us, and we will (a) directly address the defect or issue, to the extent it relates to our interface with the Third Party Software; and/or (b) facilitate resolution with the Developer, unless that Developer requires that you have a separate, direct maintenance agreement in effect with that Developer. In all events, if you do not have a Maintenance and Support Agreement in effect with us, you will be responsible for resolving defects and other issues related to the Third Party Software directly with the Developer.

SECTION F – INVOICING AND PAYMENT; INVOICE DISPUTES

1. Invoicing and Payment. We will invoice you for all fees set forth in the Investment Summary per our Invoicing and Payment Policy, subject to Section F(2).

2. Invoice Disputes. If you believe any delivered software or service does not conform to the warranties in this Agreement, you will provide us with written notice within thirty (30) days of your receipt of the applicable invoice. The written notice must contain reasonable detail of the issues you contend are in dispute so that we can confirm the issue and respond to your notice with either a justification of the invoice, an adjustment to the invoice, or a proposal addressing the issues presented in your notice. We will work with you as may be necessary to develop an action plan that outlines reasonable steps to be taken by each of us to resolve any issues presented in your notice. You may withhold payment of the amount(s) actually in dispute, and only those amounts, until we complete the action items outlined in the plan. If we are unable to complete the action items outlined in the action plan because of your failure to complete the items agreed to be done by you, then you will remit full payment of the invoice. We reserve the right to suspend delivery of all

services, including maintenance and support services, if you fail to pay an invoice not disputed as described above within fifteen (15) days of notice of our intent to do so.

SECTION G – TERMINATION

1. Termination. This Agreement may be terminated as set forth below. In the event of termination, you will pay us for all undisputed fees and expenses related to the software, products, and/or services you have received, or we have incurred or delivered, prior to the effective date of termination. Disputed fees and expenses in all terminations other than your termination for cause must have been submitted as invoice disputes in accordance with Section F(2).

   1.1 For Cause. If you believe we have materially breached this Agreement, you will invoke the Dispute Resolution clause set forth in Section I(3). You may terminate this Agreement for cause in the event we do not cure, or create a mutually agreeable action plan to address, a material breach of this Agreement within the thirty (30) day window set forth in Section I(3).

   1.2 Force Majeure. Either party has the right to terminate this Agreement if a Force Majeure event suspends performance of this Agreement for a period of forty-five (45) days or more.

   1.3 Lack of Appropriations. If you should not appropriate or otherwise receive funds sufficient to purchase, lease, operate, or maintain the software or services set forth in this Agreement, you may unilaterally terminate this Agreement upon thirty (30) days written notice to us. You will not be entitled to a refund or offset of previously paid license and other fees. You agree not to use termination for lack of appropriations as a substitute for termination for convenience.

SECTION H – INDEMNIFICATION, LIMITATION OF LIABILITY AND INSURANCE

1. Intellectual Property Infringement Indemnification.

   1.1 We will defend you against any third party claim(s) that the Tyler Software or Documentation infringes that third party's patent, copyright, or trademark, or misappropriates its trade secrets, and will pay the amount of any resulting adverse final judgment (or settlement to which we consent). You must notify us promptly in writing of the claim and give us sole control over its defense or settlement. You agree to provide us with reasonable assistance, cooperation, and information in defending the claim at our expense.

   1.2 Our obligations under this Section H(1) will not apply to the extent the claim or adverse final judgment is based on your: (a) use of a previous version of the Tyler Software and the claim would have been avoided had you installed and used the current version of the Tyler Software, and we provided notice of that requirement to you; (b) combining the Tyler Software with any product or device not provided, contemplated, or approved by us; (c) altering or modifying the Tyler Software, including any modification by third parties at your direction or otherwise permitted by you; (d) use of the Tyler Software in contradiction of this Agreement, including with non-licensed third parties; or (e) willful infringement, including use of the Tyler Software after we notify you to discontinue use due to such a claim.

   1.3 If we receive information concerning an infringement or misappropriation claim related to the Tyler Software, we may, at our expense and without obligation to do so, either: (a) procure for

you the right to continue its use; (b) modify it to make it non-infringing; or (c) replace it with a functional equivalent, in which case you will stop running the allegedly infringing Tyler Software immediately. Alternatively, we may decide to litigate the claim to judgment, in which case you may continue to use the Tyler Software consistent with the terms of this Agreement.

1.4 If an infringement or misappropriation claim is fully litigated and your use of the Tyler Software is enjoined by a court of competent jurisdiction, in addition to paying any adverse final judgment (or settlement to which we consent), we will, at our option, either: (a) procure the right to continue its use; (b) modify it to make it non-infringing; (c) replace it with a functional equivalent; or (d) terminate your license and refund the license fees paid for the infringing Tyler Software, as depreciated on a straight-line basis measured over seven (7) years from the date the Tyler Software was originally licensed. We will pursue those options in the order listed herein. This section provides your exclusive remedy for third party copyright, patent, or trademark infringement and trade secret misappropriation claims.

2. General Indemnification.

2.1 We will indemnify and hold harmless you and your agents, officials, and employees from and against any and all third-party claims, losses, liabilities, damages, costs, and expenses (including reasonable attorney's fees and costs) for (a) personal injury or property damage to the extent caused by our negligence or willful misconduct; or (b) our violation of PCI DSS requirements or a law applicable to our performance under this Agreement. You must notify us promptly in writing of the claim and give us sole control over its defense or settlement. You agree to provide us with reasonable assistance, cooperation, and information in defending the claim at our expense.

2.2 To the extent permitted by applicable law, you will indemnify and hold harmless us and our agents, officials, and employees from and against any and all third-party claims, losses, liabilities, damages, costs, and expenses (including reasonable attorney's fees and costs) for (a) personal injury or property damage to the extent caused by your negligence or willful misconduct; or (b) your violation of a law applicable to your performance under this Agreement. We will notify you promptly in writing of the claim and will give you sole control over its defense or settlement. We agree to provide you with reasonable assistance, cooperation, and information in defending the claim at your expense.

3. DISCLAIMER. EXCEPT FOR THE EXPRESS WARRANTIES PROVIDED IN THIS AGREEMENT AND TO THE MAXIMUM EXTENT PERMITTED BY APPLICABLE LAW, WE HEREBY DISCLAIM ALL OTHER WARRANTIES AND CONDITIONS, WHETHER EXPRESS, IMPLIED, OR STATUTORY, INCLUDING, BUT NOT LIMITED TO, ANY IMPLIED WARRANTIES, DUTIES, OR CONDITIONS OF MERCHANTABILITY OR FITNESS FOR A PARTICULAR PURPOSE. CLIENT UNDERSTANDS AND AGREES THAT TYLER DISCLAIMS ANY LIABILITY FOR ERRORS THAT RELATE TO USER ERROR.

4. LIMITATION OF LIABILITY. EXCEPT AS OTHERWISE EXPRESSLY SET FORTH IN THIS AGREEMENT, OUR LIABILITY FOR DAMAGES ARISING OUT OF THIS AGREEMENT, WHETHER BASED ON A THEORY OF CONTRACT OR TORT, INCLUDING NEGLIGENCE AND STRICT LIABILITY, SHALL BE LIMITED TO YOUR ACTUAL DIRECT DAMAGES, NOT TO EXCEED THE THEN-CURRENT ANNUAL MAINTENANCE AND SUPPORT FEE. THE PARTIES ACKNOWLEDGE AND AGREE THAT THE PRICES SET FORTH IN THIS AGREEMENT ARE SET IN RELIANCE UPON THIS LIMITATION OF LIABILITY AND TO THE MAXIMUM EXTENT ALLOWED UNDER APPLICABLE LAW, THE EXCLUSION OF CERTAIN DAMAGES, AND EACH

SHALL APPLY REGARDLESS OF THE FAILURE OF AN ESSENTIAL PURPOSE OF ANY REMEDY. THE FOREGOING LIMITATION OF LIABILITY SHALL NOT APPLY TO CLAIMS THAT ARE SUBJECT TO SECTIONS H(1) AND H(2).

5. **EXCLUSION OF CERTAIN DAMAGES. TO THE MAXIMUM EXTENT PERMITTED BY APPLICABLE LAW, IN NO EVENT SHALL WE BE LIABLE FOR ANY SPECIAL, INCIDENTAL, PUNITIVE, INDIRECT, OR CONSEQUENTIAL DAMAGES WHATSOEVER, EVEN IF WE HAVE BEEN ADVISED OF THE POSSIBILITY OF SUCH DAMAGES.**

6. Insurance. During the course of performing services under this Agreement, we agree to maintain the following levels of insurance: (a) Commercial General Liability of at least $1,000,000; (b) Automobile Liability of at least $1,000,000; (c) Professional Liability of at least $1,000,000; (d) Workers Compensation complying with applicable statutory requirements; and (e) Excess/Umbrella Liability of at least $5,000,000. We will add you as an additional insured to our Commercial General Liability and Automobile Liability policies, which will automatically add you as an additional insured to our Excess/Umbrella Liability policy as well. We will provide you with copies of certificates of insurance upon your written request.

SECTION I – GENERAL TERMS AND CONDITIONS

1. Additional Products and Services. You may purchase additional products and services at the rates set forth in the Investment Summary for twelve (12) months from the Effective Date, and thereafter at our then-current list price, by executing a mutually agreed addendum. If no rate is provided in the Investment Summary, or those twelve (12) months have expired, you may purchase additional products and services at our then-current list price, also by executing a mutually agreed addendum. The terms of this Agreement will control any such additional purchase(s), unless otherwise specifically provided in the addendum.

2. Optional Items. Pricing for any listed optional products and services in the Investment Summary will be valid for twelve (12) months from the Effective Date.

3. Dispute Resolution. You agree to provide us with written notice within thirty (30) days of becoming aware of a dispute. You agree to cooperate with us in trying to reasonably resolve all disputes, including, if requested by either party, appointing a senior representative to meet and engage in good faith negotiations with our appointed senior representative. Senior representatives will convene within thirty (30) days of the written dispute notice, unless otherwise agreed. All meetings and discussions between senior representatives will be deemed confidential settlement discussions not subject to disclosure under Federal Rule of Evidence 408 or any similar applicable state rule. If we fail to resolve the dispute, then the parties shall participate in non-binding mediation in an effort to resolve the dispute. If the dispute remains unresolved after mediation, then either of us may assert our respective rights and remedies in a court of competent jurisdiction. Nothing in this section shall prevent you or us from seeking necessary injunctive relief during the dispute resolution procedures.

4. Taxes. The fees in the Investment Summary do not include any taxes, including, without limitation, sales, use, or excise tax. If you are a tax-exempt entity, you agree to provide us with a tax-exempt certificate. Otherwise, we will pay all applicable taxes to the proper authorities and you will reimburse us for such taxes. If you have a valid direct-pay permit, you agree to provide us with a

copy. For clarity, we are responsible for paying our income taxes, both federal and state, as applicable, arising from our performance of this Agreement.

5. Nondiscrimination. We will not discriminate against any person employed or applying for employment concerning the performance of our responsibilities under this Agreement. This discrimination prohibition will apply to all matters of initial employment, tenure, and terms of employment, or otherwise with respect to any matter directly or indirectly relating to employment concerning race, color, religion, national origin, age, sex, sexual orientation, ancestry, disability that is unrelated to the individual's ability to perform the duties of a particular job or position, height, weight, marital status, or political affiliation. We will post, where appropriate, all notices related to nondiscrimination as may be required by applicable law.

6. E-Verify. We have complied, and will comply, with the E-Verify procedures administered by the U.S. Citizenship and Immigration Services Verification Division for all of our employees assigned to your project.

7. Subcontractors. We will not subcontract any services under this Agreement without your prior written consent, not to be unreasonably withheld.

8. Binding Effect; No Assignment. This Agreement shall be binding on, and shall be for the benefit of, either your or our successor(s) or permitted assign(s). Neither party may assign this Agreement without the prior written consent of the other party; provided, however, your consent is not required for an assignment by us as a result of a corporate reorganization, merger, acquisition, or purchase of substantially all of our assets.

9. Force Majeure. Except for your payment obligations, neither party will be liable for delays in performing its obligations under this Agreement to the extent that the delay is caused by Force Majeure; provided, however, that within ten (10) business days of the Force Majeure event, the party whose performance is delayed provides the other party with written notice explaining the cause and extent thereof, as well as a request for a reasonable time extension equal to the estimated duration of the Force Majeure event.

10. No Intended Third Party Beneficiaries. This Agreement is entered into solely for the benefit of you and us. No third party will be deemed a beneficiary of this Agreement, and no third party will have the right to make any claim or assert any right under this Agreement. This provision does not affect the rights of third parties under any Third Party Terms.

11. Entire Agreement; Amendment. This Agreement represents the entire agreement between you and us with respect to the subject matter hereof, and supersedes any prior agreements, understandings, and representations, whether written, oral, expressed, implied, or statutory. Purchase orders submitted by you, if any, are for your internal administrative purposes only, and the terms and conditions contained in those purchase orders will have no force or effect. This Agreement may only be modified by a written amendment signed by an authorized representative of each party.

12. Severability. If any term or provision of this Agreement is held invalid or unenforceable, the remainder of this Agreement will be considered valid and enforceable to the fullest extent permitted by law.

13. No Waiver. In the event that the terms and conditions of this Agreement are not strictly enforced by either party, such non-enforcement will not act as or be deemed to act as a waiver or modification of this Agreement, nor will such non-enforcement prevent such party from enforcing each and every term of this Agreement thereafter.

14. Independent Contractor. We are an independent contractor for all purposes under this Agreement.

15. Notices. All notices or communications required or permitted as a part of this Agreement, such as notice of an alleged material breach for a termination for cause or a dispute that must be submitted to dispute resolution, must be in writing and will be deemed delivered upon the earlier of the following: (a) actual receipt by the receiving party; (b) upon receipt by sender of a certified mail, return receipt signed by an employee or agent of the receiving party; (c) upon receipt by sender of proof of email delivery; or (d) if not actually received, five (5) days after deposit with the United States Postal Service authorized mail center with proper postage (certified mail, return receipt requested) affixed and addressed to the other party at the address set forth on the signature page hereto or such other address as the party may have designated by proper notice. The consequences for the failure to receive a notice due to improper notification by the intended receiving party of a change in address will be borne by the intended receiving party.

16. Client Lists. You agree that we may identify you by name in client lists, marketing presentations, and promotional materials.

17. Confidentiality. Both parties recognize that their respective employees and agents, in the course of performance of this Agreement, may be exposed to confidential information and that disclosure of such information could violate rights to private individuals and entities, including the parties. Confidential information is nonpublic information that a reasonable person would believe to be confidential and includes, without limitation, personal identifying information (*e.g.*, social security numbers) and trade secrets, each as defined by applicable state law. Each party agrees that it will not disclose any confidential information of the other party and further agrees to take all reasonable and appropriate action to prevent such disclosure by its employees or agents. The confidentiality covenants contained herein will survive the termination or cancellation of this Agreement. This obligation of confidentiality will not apply to information that:
    (a) is in the public domain, either at the time of disclosure or afterwards, except by breach of this Agreement by a party or its employees or agents;
    (b) a party can establish by reasonable proof was in that party's possession at the time of initial disclosure;
    (c) a party receives from a third party who has a right to disclose it to the receiving party; or
    (d) is the subject of a legitimate disclosure request under the open records laws or similar applicable public disclosure laws governing this Agreement; provided, however, that in the event you receive an open records or other similar applicable request, you will give us prompt notice and otherwise perform the functions required by applicable law.

18. Business License. In the event a local business license is required for us to perform services hereunder, you will promptly notify us and provide us with the necessary paperwork and/or contact information so that we may timely obtain such license.

19. Governing Law. This Agreement will be governed by and construed in accordance with the laws of your state of domicile, without regard to its rules on conflicts of law.

20. Multiple Originals and Authorized Signatures. This Agreement may be executed in multiple originals, any of which will be independently treated as an original document. Any electronic, faxed, scanned, photocopied, or similarly reproduced signature on this Agreement or any amendment hereto will be deemed an original signature and will be fully enforceable as if an original signature. Each party represents to the other that the signatory set forth below is duly authorized to bind that party to this Agreement.

21. Cooperative Procurement. To the maximum extent permitted by applicable law, we agree that this Agreement may be used as a cooperative procurement vehicle by eligible jurisdictions. We reserve the right to negotiate and customize the terms and conditions set forth herein, including but not limited to pricing, to the scope and circumstances of that cooperative procurement.

22. Data & Insights Solution Terms. Your use of certain Tyler solutions includes Tyler's Data & Insights data platform. Your rights, and the rights of any of your end users, to use Tyler's Data & Insights data platform is subject to the Data & Insights SaaS Services Terms of Service, available at https://www.tylertech.com/terms/data-insights-saas-services-terms-of-service. By signing a Tyler Agreement or Order Form, or accessing, installing, or using any of the Tyler solutions listed at the linked terms, you certify that you have reviewed, understand, and agree to said terms.

23. Contract Documents. This Agreement includes the following exhibits:

Exhibit A	Investment Summary
Exhibit B	Invoicing and Payment Policy
	Schedule 1: Business Travel Policy
Exhibit C	Maintenance and Support Agreement
	Schedule 1: Support Call Process
Exhibit D	Third Party Terms

IN WITNESS WHEREOF, a duly authorized representative of each party has executed this Agreement as of the date(s) set forth below.

Tyler Technologies, Inc.

By: Kimberly G Watson

Name: Kimberly Watson

Title: Senior Corporate Attorney

Date: February 14, 2025

Address for Notices:
Tyler Technologies, Inc.
One Tyler Drive
Yarmouth, ME 04096
Attention: Chief Legal Officer

City of Rocklin, California

By: _____

Name: _____

Title: _____

Date: _____

Address for Notices:
City of Rocklin
3970 Rocklin Road
Rocklin, CA 95677-2720
Attention: _____

Exhibit A
Investment Summary

The following Investment Summary details the software, products, and services to be delivered by us to you under the Agreement. This Investment Summary is effective as of the Effective Date, despite any expiration date in the Investment Summary that may have lapsed as of the Effective Date.

Annual fees under the Agreement shall be as follows:

Contact Year	Maintenance Only – No PACE
Year 1	$107,294.29
Year 2	$112,659.00
Year 3	$118,291.95
Year 4	$124,206.55
Year 5	$130,416.88
Total	**$592,868.67**

REMAINDER OF PAGE INTENTIONALLY LEFT BLANK

Quoted By:	Karen Grosset
Quote Expiration:	07/12/25
Quote Name:	City of Rocklin - ERP - Contract Renewal
Quote Description:	Maintenance Renewal

Sales Quotation For:

City of Rocklin
3970 Rocklin Rd
Rocklin CA 95677-2720

Shipping Address:

Tyler License Fees and Related Services

Description	Qty	License	Hours	Module Total	Year One Maintenance
Financial Management					
Accounting/GL/BG/AP	1	$ 0.00	0	$ 0.00	$ 20,530.23
Cash Management	1	$ 0.00	0	$ 0.00	$ 3,929.34
Purchase Orders	1	$ 0.00	0	$ 0.00	$ 4,714.12
Requisitions	1	$ 0.00	0	$ 0.00	$ 3,929.34
Revenue Management					
Accounts Receivable	1	$ 0.00	0	$ 0.00	$ 4,322.64
General Billing	1	$ 0.00	0	$ 0.00	$ 1,964.68
Content Management					
Content Manager Core includes Onboarding	1	$ 0.00	0	$ 0.00	$ 4,375.82
Data Insights					
Crystal Reports	1	$ 0.00	0	$ 0.00	$ 5,103.84
Human Resources Management					
Employee Self Service	1	$ 0.00	0	$ 0.00	$ 2,357.99
HR Management	1	$ 0.00	0	$ 0.00	$ 4,518.36
Payroll	1	$ 0.00	0	$ 0.00	$ 6,483.06

Additional					
Enterprise ERP Office	1	$ 0.00	0	$ 0.00	$ 3,340.28
Enterprise Forms Processing (including Common Form Set)	1	$ 0.00	0	$ 0.00	$ 3,959.85
TOTAL		**$ 0.00**	**0**	**$ 0.00**	**$ 69,529.55**

Tyler Annual Services

Description	QTY	Imp. Hours	Annual Fee
Recurring Services			
Disaster Recovery Service	1	0	$ 17,382.37
System Management Services Contract	1	0	$ 17,382.37
TOTAL:		**0**	**$ 34,764.74**

3rd Party Hardware, Software and Services

Description	Qty	Unit Price	Unit Discount	Total Price	Unit Maint/SaaS	Unit Maint/SaaS Discount	Total Maint/SaaS
GUI Support	50	$ 0.00	$ 0.00	$ 0.00	$ 60.00	$ 0.00	$ 3,000.00
TOTAL				**$ 0.00**			**$ 3,000.00**

Summary	**One Time Fees**	**Recurring Fees**
Total Tyler License Fees	$ 0.00	$ 69,529.55
Total SaaS	$ 0.00	$ 0.00
Total Tyler Services	$ 0.00	$ 34,764.74
Total Third-Party Hardware, Software, Services	$ 0.00	$ 3,000.00

Summary Total	**$ 0.00**	**$ 107,294.29**
Contract Total	**$ 107,294.29**	

Unless otherwise indicated in the contract or amendment thereto, pricing for optional items will be held
For six (6) months from the Quote date or the Effective Date of the Contract, whichever is later.

Customer Approval: _____ Date: _____

Print Name: _____ P.O.#: _____

All Primary values quoted in US Dollars

Comments

Payment for said items, as applicable but subject to any listed assumptions herein, shall conform to the following terms:

- License fees for Tyler and third party software are invoiced upon the earlier of (i) deliver of the license key or (ii) when Tyler makes such software available for download by the Client;
- Fees for hardware are invoiced upon delivery;
- Fees for year one of hardware maintenance are invoiced upon delivery of the hardware;
- Annual Maintenance and Support fees, SaaS fees, Hosting fees, and Subscription fees are first payable when Tyler makes the software available for download by the Client (for Maintenance) or on the first day of the month following the date this quotation was signed (for SaaS, Hosting, and Subscription), and any such fees are prorated to align with the applicable term under the Agreement, with renewals invoiced annually thereafter in accord with the Agreement.
- Fees for services included in this sales quotation shall be invoiced as indicated below.
    - Implementation and other professional services fees shall be invoiced as delivered.
    - Fixed-fee Business Process Consulting services shall be invoiced 50% upon delivery of the Best Practice Recommendations, by module,

and 50% upon delivery of custom desktop procedures, by module.

- Fixed-fee conversions are invoiced 50% upon initial delivery of the converted data, by conversion module, and 50% upon Client acceptance to load the converted data into Live/Production environment, by conversion module.
- Except as otherwise provided, other fixed price services are invoiced upon complete delivery of the service. For the avoidance of doubt, where "Project Planning Services" are provided, payment shall be invoiced upon delivery of the Implementation Planning document. Dedicated Project Management services, if any, will be invoiced monthly in arrears, beginning on the first day of the month immediately following initiation of project planning.
- If Client has purchased any change management services, those services will be invoiced in accordance with the Agreement.
- Notwithstanding anything to the contrary stated above, the following payment terms shall apply to services fees specifically for migrations: Tyler will invoice Client 50% of any Migration Fees listed above upon Client approval of the product suite migration schedule. The remaining 50%, by line item, will be billed upon the go-live of the applicable product suite. Tyler will invoice Client for any Project Management Fees listed above upon the go-live of the first product suite. Unless otherwise indicated on this Sales quotation, annual services will be invoiced in advance, for annual terms commencing on the date this sales quotation is signed by the Client. If listed annual service(s) is an addition to the same service presently existing under the Agreement, the first term of the added annual service will be prorated to expire coterminous with the existing annual term for the service, with renewals to occur as indicated in the Agreement.

- Expenses associated with onsite services are invoiced as incurred.

Tyler's quote contains estimates of the amount of services needed, based on our preliminary understanding of the scope, level of engagement, and timeline as defined in the Statement of Work (SOW) for your project. The actual amount of services required may vary, based on these factors.

Tyler's pricing is based on the scope of proposed products and services contracted from Tyler. Should portions of the scope of products or services be altered by the Client, Tyler reserves the right to adjust prices for the remaining scope accordingly.

Unless otherwise noted, prices submitted in the quote do not include travel expenses incurred in accordance with Tyler's then-current Business Travel Policy.

Tyler's prices do not include applicable local, city or federal sales, use excise, personal property or other similar taxes or duties, which you are responsible for determining and remitting. Installations are completed remotely but can be done onsite upon request at an additional cost.

In the event Client cancels services less than four (4) weeks in advance, Client is liable to Tyler for (i) all non-refundable expenses incurred by Tyler on Client's behalf; and (ii) daily fees associated with the cancelled services if Tyler is unable to re-assign its personnel.

The Implementation Hours included in this quote assume a work split effort of 70% Client and 30% Tyler.

Implementation Hours are scheduled and delivered in four (4) or eight (8) hour increments.

Tyler provides onsite training for a maximum of 12 people per class. In the event that more than 12 users wish to participate in a training class or more than one occurrence of a class is needed, Tyler will either provide additional days at then-current rates for training or Tyler will utilize a Train-the-Trainer approach whereby the client designated attendees of the initial training can thereafter train the remaining users.

Financial library includes: 1 A/P check, 1 EFT/ACH, 1 Purchase order, 1099M, 1099INT, 1099S, and 1099G.

In the event Client acquires from Tyler any edition of Content Manager software other than Enterprise Edition, the license for Content Manager is restricted to use with Tyler applications only. If Client wishes to use Content Manager software with non-Tyler applications, Client must purchase or upgrade to Content Manager Enterprise Edition.

Tyler's form library prices are based on the actual form quantities listed, and assume the forms will be provided according to the standard Enterprise ERP form template. Any forms in addition to the quoted amounts and types, including custom forms or forms that otherwise require custom programming, are subject to an additional fee. Please also note that use of the Tyler Forms functionality requires the use of approved printers as well. You may contact Tyler's support team for the most current list of approved printers. Any forms included in this quote are based on the standard form templates provided. Custom forms, additional forms and any custom programming are subject to additional fees not included in this quote. The additional fees would be quoted at the time of request, generally during the implementation of the forms. Please note that the form solution provided requires the use of approved printers. You may contact Tyler's support team for the most current list of approved printers.

General Billing library includes: standard invoice, standard statement, standard general billing receipt and standard miscellaneous receipt.

Tyler's System Management Services is calculated at 25% of the Enterprise ERP annual maintenance. There is a $2,500 minimum annual fee. Systems Management Services are invoiced when you sign this sales quotation and are provided in accordance with the terms of service for Tyler Systems Management found here: https://www.tylertech.com/terms/tyler-systems-management-terms-of-service.

Tyler's Disaster Recovery Service is calculated at 25% of the Enterprise ERP annual maintenance. There is a $5,000 minimum annual fee for Disaster Recovery service. The Disaster Recovery fees are applicable only to one Live Enterprise ERP database and excludes all test and training databases. Disaster Recovery Services are invoiced annually in advance upon our receipt of your data. Disaster Recovery services will be provided in accordance with the terms of service for Disaster Recovery Services found here: https://www.tylertech.com/terms/disaster-recovery-terms-of-service.

Exhibit B
Invoicing and Payment Policy

We will provide you with the software and services set forth in the Investment Summary. Capitalized terms not otherwise defined will have the meaning assigned to such terms in the Agreement.

Invoicing: We will invoice you for the applicable license and services fees in the Investment Summary as set forth below. Your rights to dispute any invoice are set forth in the Agreement.

1. Tyler Software.

   1.1. *License Fees*: License fees are invoiced as follows: 100% on the Effective Date.
   1.2. *Maintenance and Support Fees*: Year 1 maintenance and support fees are due on the Effective Date.
   1.3. *SaaS & Subscription Fees*: SaaS (including hosting) fees and subscription fees are invoiced on an annual basis, beginning on the first day of the month immediately following the Effective Date. Your annual SaaS fees and subscription fees for the initial year one term are set forth in the Investment Summary. Upon expiration of the initial term, your annual SaaS fees and subscription fees will be at our then-current rates.

2. Other Tyler Software and Services.

   2.1. *Implementation and Other Professional Services (including training):* Implementation and other professional services (including training) are billed and invoiced as delivered, at the rates set forth in the Investment Summary.
   2.2. *Consulting Services*: If you have purchased any Business Process Consulting services, if they have been quoted as fixed-fee services, they will be invoiced 50% upon delivery of the best practice recommendations, by module, and 50% upon delivery of custom desktop procedures, by module. If you have purchased any Business Process Consulting services and they are quoted as an estimate, then we will bill you the actual services delivered on a time and materials basis.
   2.3. *Conversions*: Fixed-fee conversions are invoiced 50% upon initial delivery of the converted data, by conversion option, and 50% upon Client acceptance to load the converted data into Live/Production environment, by conversion option. Where conversions are quoted as estimated, we will bill you the actual services delivered on a time and materials basis.
   2.4. *Requested Modifications to the Tyler Software*: Requested modifications to the Tyler Software are invoiced 50% upon delivery of specifications and 50% upon delivery of the applicable modification. You must report any failure of the modification to conform to the specifications within thirty (30) days of delivery; otherwise, the modification will be deemed to be in compliance with the specifications after the 30-day window has passed. You may still report Defects to us as set forth in the Maintenance and Support Agreement.

2.5. *Other Fixed Price Services*: Except as otherwise provided, other fixed price services are invoiced as delivered, at the rates set forth in the Investment Summary. For the avoidance of doubt, where "Project Planning Services" are provided, payment will be due upon delivery of the Implementation Planning document.

2.6. *Systems Management*: Systems Management Services are invoiced on the Effective Date and are provided in accordance with the terms of service for Tyler Systems Management found here: https://www.tylertech.com/terms/tyler-systems-management-terms-of-service. Notwithstanding anything to the contrary herein, the term will renew automatically for up to four (4) additional one (1) year terms unless terminated in writing by either party at least thirty (30) days prior to the end of the then-current term. Systems Management Services fees for the first four (4) annual renewals will not increase more than five percent (5%) on an annualized basis.

2.7. *Disaster Recovery Services*: Disaster Recovery Services are invoiced annually in advance on the Effective Date. Disaster Recovery services will be provided in accordance with the terms of service for Disaster Recovery Services found here: https://www.tylertech.com/terms/disaster-recovery-terms-of-service. Notwithstanding anything to the contrary herein, the term will renew automatically for up to four (4) additional one (1) year terms unless terminated in writing by either party at least thirty (30) days prior to the end of the then-current term. Disaster Recovery fees for the first four (4) annual renewals will not increase more than five percent (5%) on an annualized basis.

3. Third Party Products and Hardware.

3.1. Third Party Software License Fees: License fees for Third Party Software, if any, are invoiced when we make it available to you for downloading.

3.2. Third Party Software Maintenance: The first year maintenance fee for the Third Party Software is invoiced on the Effective Date. Subsequent annual maintenance fees for Third Party Software are invoiced annually, in advance, at then-current rates, upon each anniversary thereof.

3.3. Hardware: Third Party Hardware costs, if any, are invoiced upon delivery.

3.4. Hardware Maintenance: The first year maintenance fee for Hardware is invoiced upon delivery of the hardware. Subsequent annual maintenance fees for hardware are invoiced annually, in advance, at then-current rates, upon each anniversary thereof.

3.5. Third Party Services: Fees for Third Party Services, if any, are invoiced as delivered, along with applicable expenses, at the rates set forth in the Investment Summary. For the avoidance of doubt, Finite Matters will invoice Client directly for any services fees for Pattern Stream.

3.6. Third Party SaaS: Third Party SaaS Services fees, if any, are invoiced annually, in advance, commencing with availability of the respective Third Party SaaS Services. Pricing for the first year of Third Party SaaS Services is indicated in the Investment Summary. Pricing for subsequent years will be at the respective third party's then-current rates.

4. Transaction Fees. Unless paid directly by an end user at the time of transaction, per transaction (order, call, message, etc.) fees are invoiced on a quarterly basis. Fees are indicated in Exhibit A and may be increased by Tyler upon notice of no less than thirty (30) days.

5. Expenses. The service rates in the Investment Summary do not include travel expenses. Expenses for Tyler delivered services will be billed as incurred and only in accordance with our then-current Business Travel Policy, plus a 10% travel agency processing fee. Our current Business Travel Policy is attached to this Exhibit B at Schedule 1. Copies of receipts will be provided upon request; we

reserve the right to charge you an administrative fee depending on the extent of your requests. Receipts for miscellaneous items less than twenty-five dollars and mileage logs are not available.

Payment. Payment for undisputed invoices is due within forty-five (45) days of the invoice date. We prefer to receive payments electronically. Our electronic payment information is available by contacting AR@tylertech.com.

Exhibit B
Schedule 1
Business Travel Policy

1. Air Travel

A. Reservations & Tickets

The Travel Management Company (TMC) used by Tyler will provide an employee with a direct flight within two hours before or after the requested departure time, assuming that flight does not add more than three hours to the employee's total trip duration and the fare is within $100 (each way) of the lowest logical fare. If a net savings of $200 or more (each way) is possible through a connecting flight that is within two hours before or after the requested departure time and that does not add more than three hours to the employee's total trip duration, the connecting flight should be accepted.

Employees are encouraged to make advanced reservations to take full advantage of discount opportunities. Employees should use all reasonable efforts to make travel arrangements at least two (2) weeks in advance of commitments. A seven (7) day advance booking requirement is mandatory. When booking less than seven (7) days in advance, management approval will be required.

Except in the case of international travel where a segment of continuous air travel is six (6) or more consecutive hours in length, only economy or coach class seating is reimbursable. Employees shall not be reimbursed for "Basic Economy Fares" because these fares are non-refundable and have many restrictions that outweigh the cost-savings.

B. Baggage Fees

Reimbursement of personal baggage charges are based on trip duration as follows:

- Up to five (5) days = one (1) checked bag
- Six (6) or more days = two (2) checked bags

Baggage fees for sports equipment are not reimbursable.

2. Ground Transportation

A. Private Automobile

Mileage Allowance – Business use of an employee's private automobile will be reimbursed at the current IRS allowable rate, plus out of pocket costs for tolls and parking. Mileage will be calculated by using the employee's office as the starting and ending point, in compliance with IRS regulations. Employees who have been designated a home office should calculate miles from their home.

B. Rental Car

Employees are authorized to rent cars only in conjunction with air travel when cost, convenience, and the specific situation reasonably require their use. When renting a car for Tyler business, employees should select a "mid-size" or "intermediate" car. "Full" size cars may be rented when three or more employees are traveling together. Tyler carries leased vehicle coverage for business car rentals; except for employees traveling to Alaska and internationally (excluding Canada), additional insurance on the rental agreement should be declined.

C. Public Transportation

Taxi or airport limousine services may be considered when traveling in and around cities or to and from airports when less expensive means of transportation are unavailable or impractical. The actual fare plus a reasonable tip (15-18%) are reimbursable. In the case of a free hotel shuttle to the airport, tips are included in the per diem rates and will not be reimbursed separately.

D. Parking & Tolls

When parking at the airport, employees must use longer term parking areas that are measured in days as opposed to hours. Park and fly options located near some airports may also be used. For extended trips that would result in excessive parking charges, public transportation to/from the airport should be considered. Tolls will be reimbursed when receipts are presented.

3. Lodging

Tyler's TMC will select hotel chains that are well established, reasonable in price, and conveniently located in relation to the traveler's work assignment. Typical hotel chains include Courtyard, Fairfield Inn, Hampton Inn, and Holiday Inn Express. If the employee has a discount rate with a local hotel, the hotel reservation should note that discount and the employee should confirm the lower rate with the hotel upon arrival. Employee memberships in travel clubs such as AAA should be noted in their travel profiles so that the employee can take advantage of any lower club rates.

"No shows" or cancellation fees are not reimbursable if the employee does not comply with the hotel's cancellation policy.

Tips for maids and other hotel staff are included in the per diem rate and are not reimbursed separately.

Employees are not authorized to reserve non-traditional short-term lodging, such as Airbnb, VRBO, and HomeAway. Employees who elect to make such reservations shall not be reimbursed.

4. Meals and Incidental Expenses

Employee meals and incidental expenses while on travel status within the continental U.S. are in accordance with the federal per diem rates published by the General Services Administration. Incidental expenses include tips to maids, hotel staff, and shuttle drivers and other minor travel expenses. Per diem rates are available at www.gsa.gov/perdiem.

Per diem for Alaska, Hawaii, U.S. protectorates and international destinations are provided separately by the Department of State and will be determined as required.

A. Overnight Travel

For each full day of travel, all three meals are reimbursable. Per diems on the first and last day of a trip are governed as set forth below.

Departure Day

Depart before 12:00 noon	Lunch and dinner
Depart after 12:00 noon	Dinner

Return Day

Return before 12:00 noon	Breakfast
Return between 12:00 noon & 7:00 p.m.	Breakfast and lunch
Return after 7:00 p.m.*	Breakfast, lunch and dinner

*7:00 p.m. is defined as direct travel time and does not include time taken to stop for dinner.

The reimbursement rates for individual meals are calculated as a percentage of the full day per diem as follows:

Breakfast	15%
Lunch	25%
Dinner	60%

B. Same Day Travel

Employees traveling at least 100 miles to a site and returning in the same day are eligible to claim lunch on an expense report. Employees on same day travel status are eligible to claim dinner in the event they return home after 7:00 p.m.*

*7:00 p.m. is defined as direct travel time and does not include time taken to stop for dinner.

5. Internet Access – Hotels and Airports

   Employees who travel may need to access their e-mail at night. Many hotels provide free high speed internet access and Tyler employees are encouraged to use such hotels whenever possible. If an employee's hotel charges for internet access it is reimbursable up to $10.00 per day. Charges for internet access at airports are not reimbursable.

6. International Travel

   All international flights with the exception of flights between the U.S. and Canada should be reserved through TMC using the "lowest practical coach fare" with the exception of flights that are six (6) or more consecutive hours in length. In such event, the next available seating class above coach shall be reimbursed.

   When required to travel internationally for business, employees shall be reimbursed for photo fees, application fees, and execution fees when obtaining a new passport book, but fees related to passport renewals are not reimbursable. Visa application and legal fees, entry taxes and departure taxes are reimbursable.

   The cost of vaccinations that are either required for travel to specific countries or suggested by the U.S. Department of Health & Human Services for travel to specific countries, is reimbursable.

   Section 4, Meals & Incidental Expenses, and Section 2.b., Rental Car, shall apply to this section.

Exhibit C
Maintenance and Support Agreement

We will provide you with the following maintenance and support services for the Tyler Software. Capitalized terms not otherwise defined will have the meaning assigned to such terms in the Agreement.

1. Term. We provide maintenance and support services on an annual basis. The initial term commences on the Effective Date and remains in effect for one (1) year. The term will renew automatically for up to four (4) additional one (1) year terms unless terminated in writing by either party at least thirty (30) days prior to the end of the then-current term. Maintenance and support fees for the first four (4) annual renewals will not increase more than five percent (5%) on an annualized basis.

2. Maintenance and Support Fees. Your year 1 maintenance and support fees for the Tyler Software are listed in the Investment Summary, and your payment obligations are set forth in the Invoicing and Payment Policy. We reserve the right to suspend maintenance and support services if you fail to pay undisputed maintenance and support fees within thirty (30) days of our written notice. We will reinstate maintenance and support services only if you pay all past due maintenance and support fees, including all fees for the periods during which services were suspended.

3. Maintenance and Support Services. As long as you are not using the Help Desk as a substitute for our training services on the Tyler Software, and you timely pay your maintenance and support fees, we will, consistent with our then-current Support Call Process:

   3.1 perform our maintenance and support obligations in a professional, good, and workmanlike manner, consistent with industry standards, to resolve Defects in the Tyler Software (subject to any applicable release life cycle policy); provided, however, that if you modify the Tyler Software without our consent, our obligation to provide maintenance and support services on and warrant the Tyler Software will be void;

   3.2 provide support during our established support hours;

   3.3 maintain personnel that are sufficiently trained to be familiar with the Tyler Software and Third Party Software, if any, in order to provide maintenance and support services;

   3.4 provide you with a copy of all releases to the Tyler Software (including updates and enhancements) that we make generally available without additional charge to customers who have a maintenance and support agreement in effect; and

   3.5 provide non-Defect resolution support of prior releases of the Tyler Software in accordance with any applicable release life cycle policy.

4. Client Responsibilities. We will use all reasonable efforts to perform any maintenance and support services remotely. Currently, we use a third-party secure unattended connectivity tool called Bomgar, as well as GotoAssist by Citrix. Therefore, you agree to maintain a high-speed internet connection capable of connecting us to your PCs and server(s). You agree to provide us with a login account and local administrative privileges as we may reasonably require to perform remote services. We will, at our option, use the secure connection to assist with proper diagnosis and resolution, subject to any reasonably applicable security protocols. If we cannot resolve a support issue remotely, we may be required to provide onsite services. In such event, we will be responsible for our travel expenses, unless it is determined that the reason onsite support was required was a reason outside our control. Either way, you agree to provide us with full and free access to the Tyler Software, working space, adequate facilities within a reasonable distance from the equipment, and use of machines, attachments, features, or other equipment reasonably necessary for us to provide the maintenance and support services, all at no charge to us. We strongly recommend that you also maintain a VPN for backup connectivity purposes.

5. Hardware and Other Systems. If you are a self-hosted customer and, in the process of diagnosing a software support issue, it is discovered that one of your peripheral systems or other software is the cause of the issue, we will notify you so that you may contact the support agency for that peripheral system. We cannot support or maintain Third Party Products except as expressly set forth in the Agreement.

   In order for us to provide the highest level of software support, you bear the following responsibility related to hardware and software:

   (a) All infrastructure executing Tyler Software shall be managed by you;
   (b) You will maintain support contracts for all non-Tyler software associated with Tyler Software (including operating systems and database management systems, but excluding Third-Party Software, if any); and
   (c) You will perform daily database backups and verify that those backups are successful.

6. Other Excluded Services. Maintenance and support fees do not include fees for the following services: (a) initial installation or implementation of the Tyler Software; (b) onsite maintenance and support (unless Tyler cannot remotely correct a Defect in the Tyler Software, as set forth above); (c) application design; (d) other consulting services; (e) maintenance and support of an operating system or hardware, unless you are a hosted customer; (f) support outside our normal business hours as listed in our then-current Support Call Process; or (g) installation, training services, or third party product costs related to a new release. Requested maintenance and support services such as those outlined in this section will be billed to you on a time and materials basis at our then current rates. You must request those services with at least one (1) week's advance notice.

Current Support Call Process. Our current Support Call Process for the Tyler Software is attached to this Exhibit C as Schedule 1.

Exhibit C
Schedule 1
Support Call Process

Support Channels

Tyler Technologies, Inc. provides the following channels of software support for authorized users*:

(1) On-line submission (portal) – for less urgent and functionality-based questions, users may create support incidents through the Tyler Customer Portal available at the Tyler Technologies website. A built-in Answer Panel provides users with resolutions to most "how-to" and configuration-based questions through a simplified search interface with machine learning, potentially eliminating the need to submit the support case.

(2) Email – for less urgent situations, users may submit emails directly to the software support group.

(3) Telephone – for urgent or complex questions, users receive toll-free, telephone software support.

** Channel availability may be limited for certain applications.*

Support Resources

A number of additional resources are available to provide a comprehensive and complete support experience:

(1) Tyler Website – www.tylertech.com – for accessing client tools, documentation, and other information including support contact information.

(2) Tyler Search -a knowledge based search engine that lets you search multiple sources simultaneously to find the answers you need, 24x7.

(3) Tyler Community –provides a venue for all Tyler clients with current maintenance agreements to collaborate with one another, share best practices and resources, and access documentation.

(4) Tyler University – online training courses on Tyler products.

Support Availability

Tyler Technologies support is available during the local business hours of 8 AM to 5 PM (Monday – Friday) across four US time zones (Pacific, Mountain, Central and Eastern). Tyler's holiday schedule is outlined below. There will be no support coverage on these days.

New Year's Day	Labor Day
Martin Luther King, Jr. Day	Thanksgiving Day
Memorial Day	Day after Thanksgiving
Independence Day	Christmas Day

For support teams that provide after-hours service, we will provide you with procedures for contacting support staff after normal business hours for reporting Priority Level 1 Defects only. Upon receipt of such a Defect notification, we will use commercially reasonable efforts to meet the resolution targets set forth below.

We will also make commercially reasonable efforts to be available for one pre-scheduled Saturday of each month to assist your IT staff with applying patches and release upgrades, as well as consulting with them on server maintenance and configuration of the Tyler Software environment.

Incident Handling

Incident Tracking

Every support incident is logged into Tyler's Customer Relationship Management System and given a unique case number. This system tracks the history of each incident. The case number is used to track and reference open issues when clients contact support. Clients may track incidents, using the case number, through Tyler's Customer Portal or by calling software support directly.

Incident Priority

Each incident is assigned a priority level, which corresponds to the Client's needs. Tyler and the Client will reasonably set the priority of the incident per the chart below. This chart is not intended to address every type of support incident, and certain "characteristics" may or may not apply depending on whether the Tyler software has been deployed on customer infrastructure or the Tyler cloud. The goal is to help guide the Client towards clearly understanding and communicating the importance of the issue and to describe generally expected response and resolution targets in the production environment only.

References to a "confirmed support incident" mean that Tyler and the Client have successfully validated the reported Defect/support incident.

Priority Level	Characteristics of Support Incident	Resolution Targets*
1 Critical	Support incident that causes (a) complete application failure or application unavailability; (b) application failure or unavailability in one or more of the client's remote location; or (c) systemic loss of multiple essential system functions.	Tyler shall provide an initial response to Priority Level 1 incidents within one (1) business hour of receipt of the incident. Once the incident has been confirmed, Tyler shall use commercially reasonable efforts to resolve such support incidents or provide a circumvention procedure within one (1) business day. For non-hosted customers, Tyler's responsibility for lost or corrupted data is limited to assisting the Client in restoring its last available database.
2 High	Support incident that causes (a) repeated, consistent failure of essential functionality affecting more than one user or (b) loss or corruption of data.	Tyler shall provide an initial response to Priority Level 2 incidents within four (4) business hours of receipt of the incident. Once the incident has been confirmed, Tyler shall use commercially reasonable efforts to resolve such support incidents or provide a circumvention procedure within ten (10) business days. For non-hosted customers, Tyler's responsibility for loss or corrupted data is limited to assisting the Client in restoring its last available database.

Priority Level	Characteristics of Support Incident	Resolution Targets*
3 Medium	Priority Level 1 incident with an existing circumvention procedure, or a Priority Level 2 incident that affects only one user or for which there is an existing circumvention procedure.	Tyler shall provide an initial response to Priority Level 3 incidents within one (1) business day of receipt of the incident. Once the incident has been confirmed, Tyler shall use commercially reasonable efforts to resolve such support incidents without the need for a circumvention procedure with the next published maintenance update or service pack, which shall occur at least quarterly. For non-hosted customers, Tyler's responsibility for lost or corrupted data is limited to assisting the Client in restoring its last available database.
4 Non-critical	Support incident that causes failure of non-essential functionality or a cosmetic or other issue that does not qualify as any other Priority Level.	Tyler shall provide an initial response to Priority Level 4 incidents within two (2) business days of receipt of the incident. Once the incident has been confirmed, Tyler shall use commercially reasonable efforts to resolve such support incidents, as well as cosmetic issues, with a future version release.

**Response and Resolution Targets may differ by product or business need*

Incident Escalation

If Tyler is unable to resolve any priority level 1 or 2 defect as listed above or the priority of an issue has elevated since initiation, you may escalate the incident to the appropriate resource, as outlined by each product support team. The corresponding resource will meet with you and any Tyler staff to establish a mutually agreeable plan for addressing the defect.

Remote Support Tool

Some support calls may require further analysis of the Client's database, processes or setup to diagnose a problem or to assist with a question. Tyler will, at its discretion, use an industry-standard remote support tool. Tyler's support team must have the ability to quickly connect to the Client's system and view the site's setup, diagnose problems, or assist with screen navigation. More information about the remote support tool Tyler uses is available upon request.

Exhibit D
Third Party Terms

DocOrigin Terms. Your use of Tyler Forms software and forms is subject to the DocOrigin End User License Agreement available for download here: https://eclipsecorp.us/eula/. By signing a Tyler Agreement or Order Form including Tyler forms software or forms, or accessing, installing, or using Tyler Forms software or forms, you agree that you have read, understood, and agree to such terms.

ROCKLIN
CALIFORNIA

City Council Staff Report

Subject: Whitney Community Park Pump Track – Change Order No. 1

Date: February 25, 2025

Submitted By: David Mohlenbrok, Community Development Director

Department: Community Development

Recommendation:
Adopt a Resolution of the City Council of the City of Rocklin Approving Change Order No. 1 and Authorizing the City Manager to Execute Change Order No. 1 with American Ramp Company, Inc.

Background:
On February 27, 2024, the City Council awarded a construction contact for the Whitney Community Park Pump Track project to American Ramp Company (ARC). The contract amount was $715,401.10 with an 11.8% contingency ($84,598.90) for a total authorized construction budget of $800,000. Due to prior job obligations for ARC, construction did not begin until September 24, 2024.

During the construction of the pump track, the City experienced a significant rain event that overwhelmed the site's drainage infrastructure. Immediately afterwards, staff and ARC began collaboration on potential remedies and have selected a solution to improve and increase the site's drainage capacity. ARC's proposed cost for the improvements is $152,768, which the City has determined to be fair and reasonable.

While the project remains within the overall approved budget, the proposed change order exceeds the City Council-approved change order authority, requiring additional contract authority of $68,169.10 to complete the project with the proposed drainage improvements.

Environmental Analysis:
The development of the Whitney Community Park, and thus the proposed pump track project and the drainage improvements, was analyzed as required by the California Environmental Quality Act (CEQA) as a part of the Northwest Rocklin Annexation Area Environmental Impact Report (EIR) and associated Addendum, approved and certified by City Council Resolutions No. 2002-230 and 2008-252, respectively. Pursuant to Public Resources Code Section 21166 and Section 15162 of California Code of Regulations, Title 14, Division 6, Chapter 3 (CEQA Guidelines), no further environmental review of the project is required.

Fiscal Impact:
The overall budget authorized for the Whitney Community Park Pump Track Project (45225) has sufficient funds to cover the total construction cost, including Change Order No. 1.

ATTACHMENTS:
1. Resolution
2. Resolution Exhibit A - Change Order No. 1

RESOLUTION NO. 2025-

RESOLUTION OF THE CITY COUNCIL OF THE CITY OF ROCKLIN APPROVING CHANGE ORDER NO. 1 AND AUTHORIZING THE CITY MANAGER TO EXECUTE CHANGE ORDER NO.1 WITH AMERICAN RAMP COMPANY, INC.

WHEREAS, the Whitney Community Park Pump Track Project consists of installing a bicycle pump track on undeveloped land within Whitney Community Park; and

WHEREAS, on February 27, 2024, the City awarded a construction contract for the Whitney Community Park Pump Track project to American Ramp Company in the amount of $715,401.10 and authorized an additional 11.8 percent construction contingency in the amount of $84,598.90 for a total authorized construction budget of $800,000.00; and

WHEREAS, during construction, the project site experienced a significant rain event that overwhelmed its drainage infrastructure, immediately following which American Ramp Company and City staff collaborated on a solution to increase the site's drainage; and

WHEREAS, American Ramp Company proposed cost to implement the drainage improvements is $152,768.00, which City staff has determined to be fair and reasonable; and

WHEREAS, the project has thus far maintained its original budget and not spent any of its construction contingency, leaving a $68,169.10 gap to fund the drainage improvements; and

WHEREAS, the budget authorized for the Whitney Community Park Pump Track (45225) has sufficient funds to cover the total construction cost, including Change Order No. 1.

NOW, THEREFORE, the City Council of the City of Rocklin does resolve as follows:

Section 1. The City Council hereby approves and authorizes the City Manager to execute Change Order No. 1 to the Whitney Community Park Pump Track Project attached hereto as Exhibit "A".

PASSED AND ADOPTED this 25th day of February, 2025, by the following vote:

AYES: Councilmembers:
NOES: Councilmembers:
ABSENT: Councilmembers:
ABSTAIN: Councilmembers:

_____
Jill Gayaldo, Mayor

ATTEST:

_____
Avinta Singh, City Clerk

EXHIBIT A

CHANGE ORDER

CHANGE ORDER NO.: 1	**PROJECT NAME: Whitney Park Bike Pump Track**
DATE OF ISSUANCE: 02/05/2025	**CONTRACTOR: American Ramp Company**

You are directed to make the following changes to the plans and specifications or do the following work not included in the plans and specifications on this contract. Work includes remobilization, specialty work to remove and install portions of the pump track and complete the drainage plan as required. Cost includes all labor, materials and other incidentals.

JUSTIFICATION:

1. Added scope includes drainage facilities not included in the original scope of work. During winter months noticeable ponding was observed facilitating the need for additional improvements. A simplified cost breakdown for the work is as follows:
    - Remobilization - $26,500
    - Equipment - $29,500
    - Materials - $27,018
    - Labor/Per Diem - $69,750

    TOTAL Cost - $152,768

CHANGE TO CONTRACT PRICE	CHANGE TO CONTRACT TIME
Original Contract Price: $715,401.10	Original Contract Time: 50 Working Days
Current Contract price, as adjusted by previous change orders: N/A	Current contract time, as adjusted by previous change orders: N/A
The Contract Price due to this Change Order will be increased by $152,768.00	The Contract Time due to this Change Order will be increased by: 0 Working Days
The new Contract Price due to this Change Order will be $868,169.10	The new Contract Time due to this Change Order will be: 50 Working Days

NOTE: TO BE EFFECTIVE, THIS ORDER MUST BE APPROVED BY THE CITY COUNCIL.

Requested by: David Mohlenbrok Community Development Director	Executed by: _____ Aly Zimmermann, City Manager
Date: 02/05/2025	Date:

We, the undersigned contractor, have given careful consideration to the change proposed, and agree, if the proposal is approved, that we will provide all equipment, furnish all materials, except as may otherwise be noted above, and perform all services necessary for the work above specified and will accept as full payment therefore the prices shown above.

Accepted by: Josh Quade	Date: 2/5/25

City Council Staff Report

Subject: Vacation of Alley Between Oak Street and Pine Street and Property Line Reconfiguration

Date: February 25, 2025

Submitted By: Nathan Anderson, Senior Planner
Lynn Toth, Associate Civil Engineer
David Mohlenbrok, Community Development Director

Department: Community Development

Recommendation:

A. Adopt a Resolution of the City Council of the City of Rocklin Ordering the Vacation of a Public Street – Alley Between Oak Street and Pine Street.
B. Adopt a Resolution of the City Council of the City of Rocklin Authorizing the City Manager to Execute and Record Grant Deeds to Create Two Parcels Within the City's Real Property Located Between Pacific Street, Oak Street, Railroad Avenue, and Pine Street.
C. Adopt a Resolution of the City Council of the City of Rocklin Accepting and Authorizing the City Manager to Record a Grant Deed from Community HousingWorks for the Real Property Located on the Southwest Side of Pine Street Between Railroad Avenue and Pacific Street/APN 010-121-006 and Authorizing the City Manager to Execute and Record a Grant Deed on Behalf of the City to Merge the Community HousingWorks Parcel with Adjacent City Property.

Background:

The staff report is included as Attachment 1 in order to maintain the integrity of the formatting.

ATTACHMENTS:

1. Staff Report
2. SR Attachment 1 - General Plan Consistency Finding
3. Resolution A - Alley Vacation
4. Resolution A - Exhibits A and B
5. Resolution B - Parcel Reconfiguration
6. Resolution B Exhibit A - Grant Deeds
7. Resolution C - City Manager Authorization
8. Resolution C Exhibit A - Current Configuration
9. Resolution C Exhibit B - Final Configuration

City Council
Staff Report

Subject: Vacation of Alley Between Oak Street and Pine Street and property line reconfiguration to enable future development

Date: February 25, 2025

Submitted by: Nathan Anderson, Senior Planner
Lynn Toth, Associate Civil Engineer
David Mohlenbrok, Community Development Director

Department: Community Development

Recommendation:

A. Adopt a Resolution of the City Council of the City of Rocklin Ordering the Vacation of a Public Street – Alley Between Oak Street and Pine Street.

B. Adopt a Resolution of the City Council of the City of Rocklin Authorizing the City Manager to Execute and Record Grant Deeds to Create Two Parcels Within the City's Real Property Located Between Pacific Street, Oak Street, Railroad Avenue, and Pine Street.

C. Adopt a Resolution of the City Council of the City of Rocklin Accepting and Authorizing the City Manager to Record a Grant Deed from Community HousingWorks for the Real Property Located on the Southwest Side of Pine Street Between Railroad Avenue and Pacific Street/APN 010-121-006 and Authorizing the City Manager to Execute and Record a Grant Deed on Behalf of the City to Merge the Community HousingWorks Parcel with Adjacent City Property.

Location:

The approximately 2.8-acre property is located north of Oak Street, south of Pine Street, west of Pacific Street, and east of Railroad Avenue. The property consists of three legal parcels owned by the City of Rocklin, assigned five Assessor's Parcel Numbers (APNs): 010-121-001, -002, -004, -005, and 010-040-039. A fourth legal parcel, depicted on Figure 1 as Parcel 4, and as APN 010-121-006, is owned by Community HousingWorks (CHW).

Background:

In September 2019, the City purchased approximately 1.8 acres located between Oak and Pine Streets and Railroad Avenue and Pacific Street from the Successor Agency using the City's Low- and Moderate-Income Housing Asset Fund. On September 28, 2021, the City Council adopted a resolution declaring these parcels, as well as the intersecting alley between the parcels, as surplus property.

Community Housing Works (CHW) is working with the City of Rocklin (City) on processing an application to develop the Pacific Street Apartments project (Project). The Project is a 110-unit affordable multifamily community. The Project proposes a mix of one, two, and three-bedroom units in four (4) three-story apartment buildings, as well as a two-story leasing and amenity building, arranged around the site.

Vacation of Alley

To facilitate development of the property, vacation of a 20-foot-wide area previously identified for construction of an alley is requested for incorporation into the Project, as shown in **Figure 1**. This approximately 400-foot-long portion of City right-of-way is located in the middle of the Project site between Oak Street and Pine Street.

Figure 1. Vacation of Alley

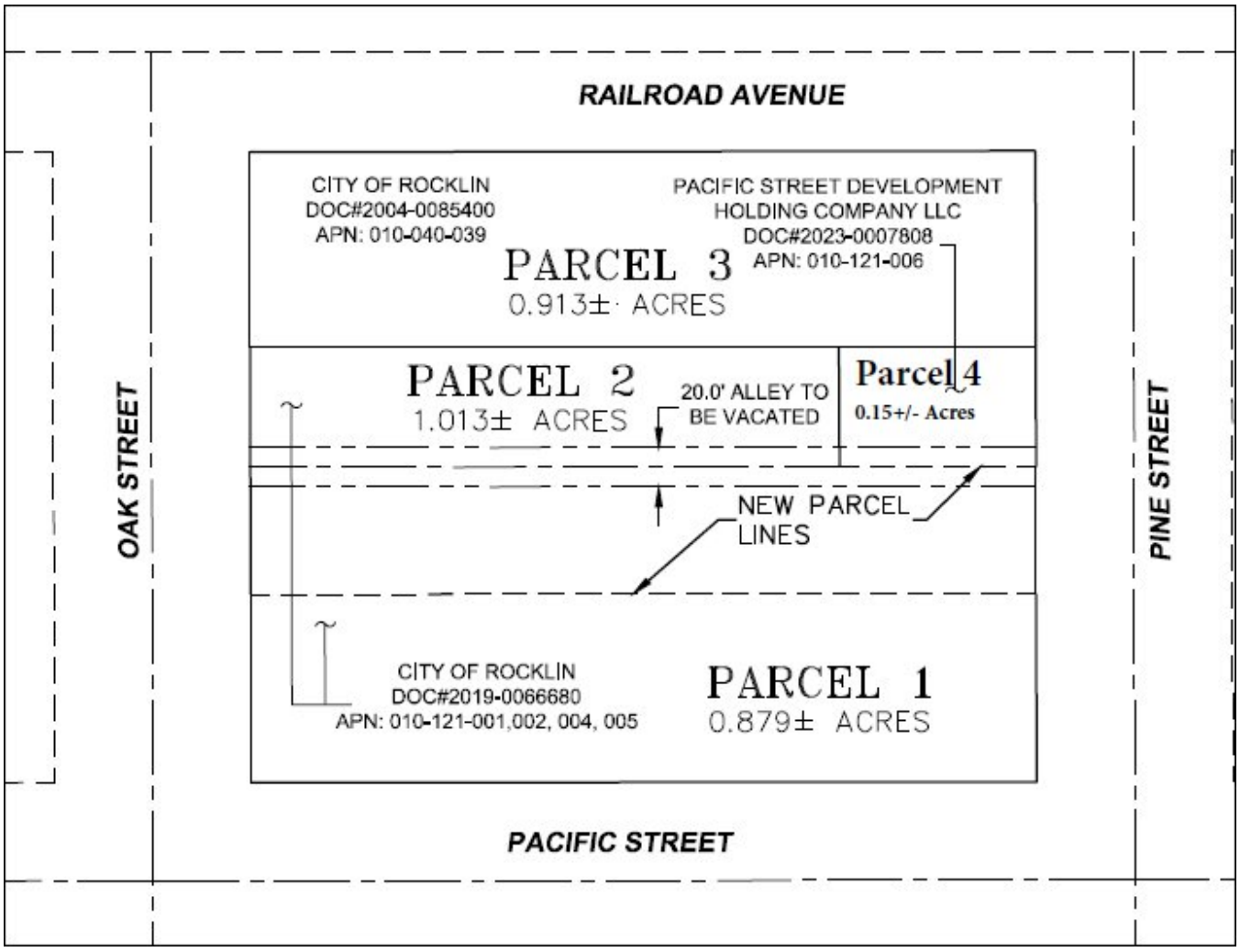

The alley's location has been depicted on local maps for over 130 years. It was originally labeled as Alley D on the Map of the Town of Rocklin, filed with the Placer County Recorder's Office on

August 9, 1893. However, due to the area's final design, the alley was never fully constructed and is no longer needed.

Legal Process for Summary Alley Vacation

In order to vacate the alley, the City must follow the street vacation process set forth in state law, specifically in the Streets and Highways Code (§8300, et. seq.). "Street" for the purposes of vacation procedures includes "alleys" (§8308). Depending on the circumstances surrounding the vacation, the City must either follow the regular vacation procedures or a summary vacation procedure. The summary vacation procedure is faster and easier than the regular procedure, as it does not require noticing or a public hearing, and may be completed by the City Council upon approval of a resolution of vacation, which must be recorded. The street is vacated as of the date of the recordation of the resolution of vacation (§§8335, 8336).

A City may summarily vacate a street when the street has been impassable for vehicular travel for five consecutive years or more and no public money has been expended for maintenance on the street during such period (§8331). Further, the summary vacation may not terminate a public service easement that is in use (§8330).

Before the City Council may vacate a street, per Government Code §65402, the proposed vacation must be reviewed by the City's Planning Commission, and the Planning Commission must make a finding that the vacation is consistent with the City's General Plan. On January 21, 2025, consistent with Government Code 65402(a), the Planning Commission of the City of Rocklin voted 5-0 to adopt Resolution No. PC-2025-03 to make General Plan Consistency Findings for vacating or abandoning a street (**Attachment 1**).

The proposed alley vacation may be vacated under the summary vacation procedure because it has never been used for vehicular travel (and not in the past consecutive five years), no public funds have ever been spent on maintenance and the City is reserving a public utility easement, so current public utilities will not lose easement rights. Since the Planning Commission approved a Resolution making a General Plan consistency finding for the proposed vacation, upon the City Council's approval of the attached Resolution of Vacation, and the recording of the same in the office of the Placer County Recorder, the alley will be vacated and the City would relinquish all rights to utilize this portion of property as future right-of-way.

Creation of Parcel 1 and Parcel 2

The Project also requires approval of the execution and recordation of Grant Deeds to create Parcel 1 and Parcel 2, as shown in **Figure 2**, within City of Rocklin property to facilitate the development of the Project for financing purposes.

Figure 2. Parcel 1 and Parcel 2

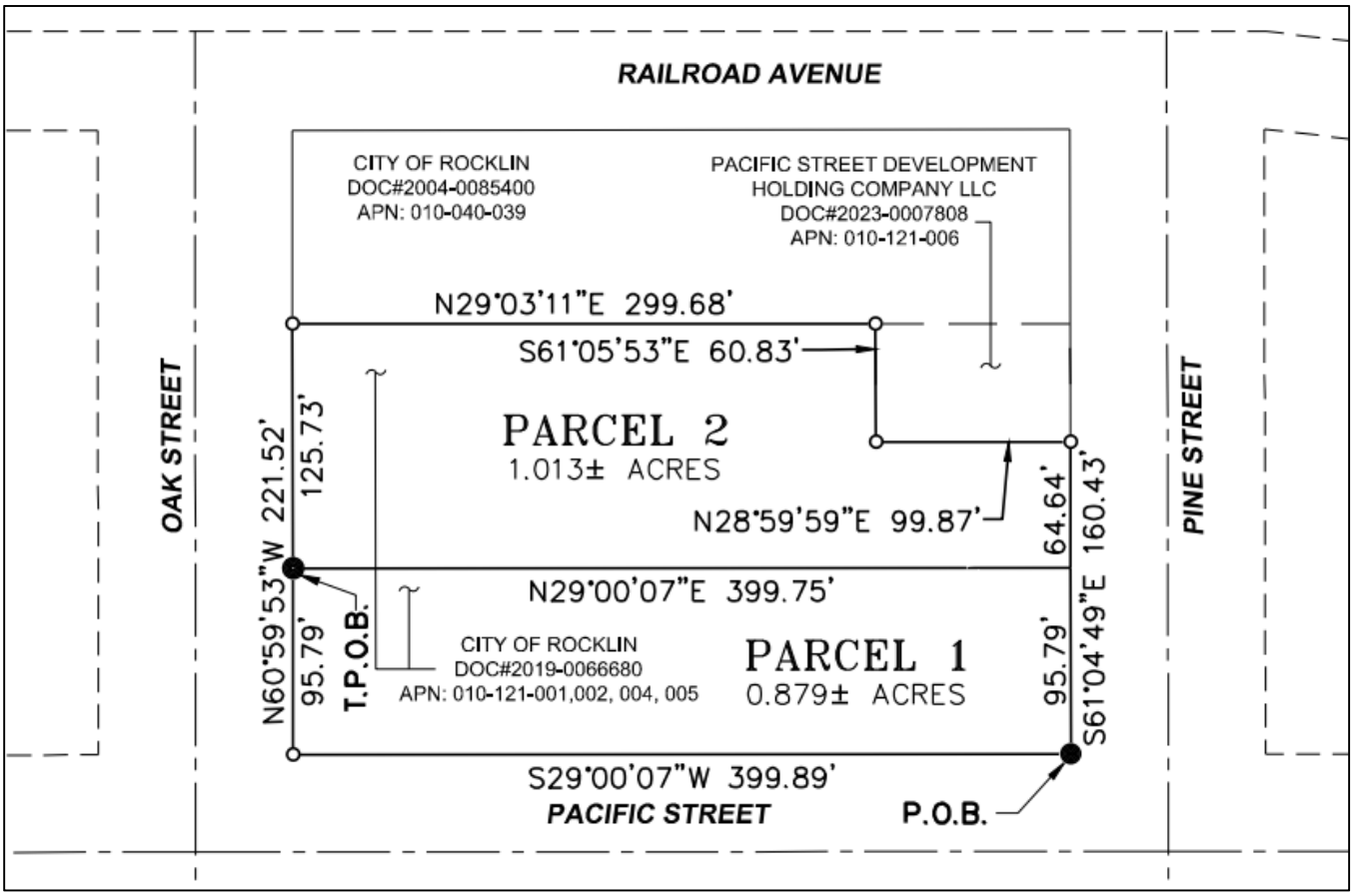

Future Merger

If the Pacific Street Apartments project is approved, it is anticipated that APN 010-121-006 (Parcel 4), currently owned by CHW, would be transferred to the City and the property would be merged into three parcels, as shown in **Figure 3**.

To facilitate this process, the project includes a resolution authorizing the City Manager to accept and record the Grant Deed for CHW's Parcel 4 when they transfer the property to the City, and also to execute and record a grant deed on behalf of the City to merge the CHW parcel with City's Parcel 2 to enable the construction of CHW's project, without having to bring the project back to City Council.

Figure 3. Ultimate Parcel Layout

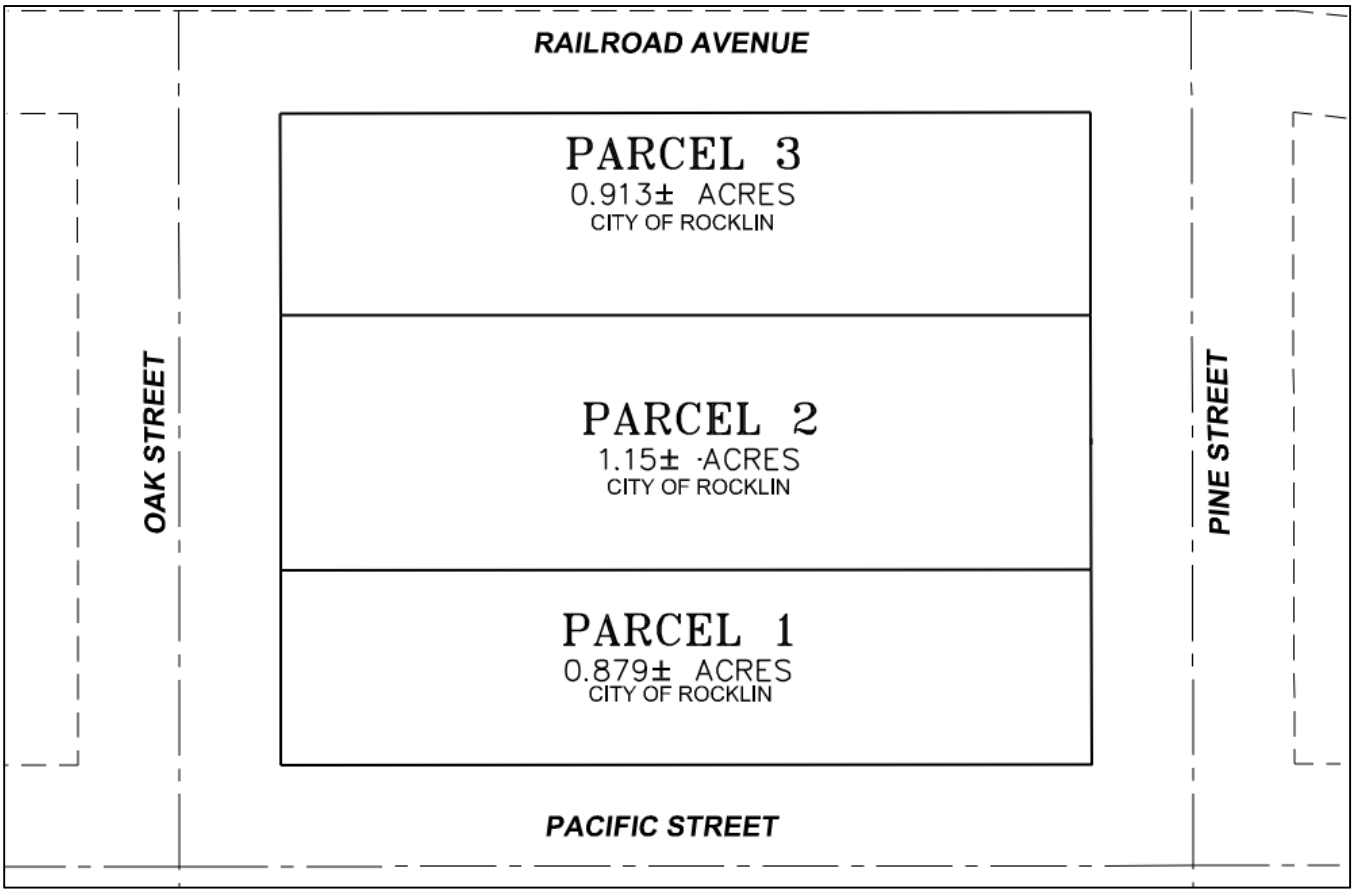

Fiscal Impact:
There is no fiscal impact associated with these requests, as the processing costs of the documents and public notices are covered by the applicant, CHW.

Further, the project would facilitate a collaborative effort between CHW and the City of Rocklin to develop a fully affordable housing project, in compliance with the State of California's mandates. Vacation of the alley will help to facilitate this development.

RESOLUTION NO. PC-2025-03

RESOLUTION OF THE PLANNING COMMISSION OF THE CITY OF ROCKLIN MAKING FINDINGS AND FURNISHING A REPORT UNDER GOVERNMENT CODE SECTION 65402(a)

(General Plan Consistency Findings for Vacating or Abandoning a Street)

WHEREAS, the City of Rocklin finds and determines that the approximately 8,000 square foot piece of property previously identified for use of an alley between Oak Street and Pine Street, shown on Exhibit A, attached hereto and by this reference incorporated herein, is no longer needed as street right-of-way due to the pending construction of the Pacific Street Apartments Project (Project), a 110-unit multifamily community on Assessor's Parcel Numbers (APNs) 010-121-001, -002, -004, -005, -006, and 010-040-039; and

WHEREAS, this finding and report of general plan consistency are based on evaluation of relevant General Plan goals and policies addressing multifamily projects and site design; and

WHEREAS, the City has determined that the full extent of the alley location is no longer required for the purposes for which it was obtained; and

WHEREAS, this site is unduly constrained by the alley location and the property owner and project applicant desire to develop the site for multifamily residential use consistent with its General Plan land use designation and to help the City to meet its Regional Housing Needs Allocation (RHNA) requirements mandated by the State of California; and

WHEREAS, Government Code Section 65402(a) requires the Planning Commission to render a report as to conformity with the City of Rocklin adopted General Plan or part thereof within forty (40) days after the matter was submitted to it, or such longer periods of time as may be designated by the legislative body, before a fee interest or easement for a street (including an alley) may be abandoned.

NOW, THEREFORE, the Planning Commission of the City of Rocklin does resolve as follows:

Section 1. The Planning Commission of the City of Rocklin finds, determines, and reports that:

A. The abandonment of an approximately 8,000 square foot piece of property previously identified for use of an alley between Oak Street and Pine Street, shown on Exhibit A, for development of a future multifamily residential project will allow it to be improved with a development consistent with the City's goal

of promoting orderly and well-planned development that enhances the City of Rocklin.

B. The abandonment of an approximately 8,000 square foot piece of property previously identified for use of an alley between Oak Street and Pine Street is consistent with and conforms to the following specific General Plan Goals, Policies, and Action Plans:

General Land Use Goals:

- The replanning, redesign, and development of undeveloped areas that are stagnant or improperly utilized.

- To promote orderly and well-planned development that enhances the City of Rocklin.

General Plan Policies:

- LU-11 Encourage infill residential development that is in keeping with the character and scale of the surrounding neighborhood, while providing a variety of densities and housing types as reflected by the zoning and land use designation of the infill property.

- LU-12 Provide a variety of residential land use designations that will meet the future needs of the City.

- LU-13 Review proposals for new residential development for compatibility with the character and scale of nearby neighborhoods, while providing a variety of densities and housing types as reflected by the zoning and land use designation of the infill property.

- LU-20 Encourage Medium High and High Density Residential uses to locate near major arterial and/or collector streets.

- LU-21 Maintain development standards unique to Central Rocklin that encourage residential development on infill parcels, including affordable housing, while maintaining compatibility with existing residential land uses.

PASSED AND ADOPTED this 21st day of January, 2025, by the following vote:

AYES:	Commissioners:	Barron, Cortez, McKenzie, Thomas
NOES:	Commissioners:	None
ABSENT:	Commissioners:	Armstrong
ABSTAIN:	Commissioners:	None

Michael Barron, Chairperson

ATTEST:

Terry Stemple, Secretary

Exhibit A

Railroad
Pine St
4950
4970
4990
Abandonment Area
Approx. 8,000 s.f.
-006
3720
-005
010-121-001
Pacific St
-004
-002
Oak St
5063

RESOLUTION NO. 2025-

RESOLUTION OF THE CITY COUNCIL OF THE CITY OF ROCKLIN
ORDERING THE VACATION OF A PUBLIC STREET – ALLEY
BETWEEN OAK STREET AND PINE STREET

WHEREAS, an approximately 2.8-acre project property, located north of Oak Street, south of Pine Street, west of Pacific Street, and east of Railroad Avenue, consisting of Assessor's Parcel Numbers (APNs) 010-121-001, -002, -004, -005, -006, and 010-040-039, includes a 20-foot-wide area previously identified for construction of an alley; and

WHEREAS, on November 8, 2022, the City Council of the City of Rocklin approved Resolution No. 2022-229, which approved an Affordable Housing Agreement between the City and Community Housingworks (CHW), under which the City would agree to ground lease the site to CHW for construction and operation of approximately 110 residential housing units affordable to limited income, known as Pacific Street Apartments, as specified in the Affordable Housing Agreement.

WHEREAS, development of the project property for the Pacific Street Apartments project requires vacation of the 20-foot-wide area previously identified for construction of the alley; and

WHEREAS, while the alley location has been depicted on local maps since 1893, due to the area's final design, the alley was never constructed and is no longer needed; and

WHEREAS, on January 21, 2025, consistent with Government Code 65402(a), the Planning Commission of the City of Rocklin voted 5-0 to adopt Resolution PC-2025-03 to make General Plan Consistency Findings for vacating the area previously identified for construction of the alley; and

WHEREAS, the City Council of the City of Rocklin has considered the City of Rocklin General Plan and finds the alleyway vacation with the General Plan; and

WHEREAS, the proposed vacation of the alley is not a project under CEQA, because there is no possibility the vacation will have an effect on the environment, and is therefore exempt under Sections 15060 (c)(2) and 15061 (b)(3) of the State CEQA Guidelines.

NOW THEREFORE, The City Council of the City of Rocklin does resolve as follows:

Section 1. Pursuant to the Public Streets, Highways and Service Easement Vacation Law (Streets & Highway Code §8335 et seq.), the City Council of the City of Rocklin does hereby order the vacation of a portion of an area designated as a public alley, as shown and described in Exhibits "A" and "B", attached hereto and by this reference incorporated herein, subject to the following reservation:

a. A public utility easement shall be retained over the entire area.

Section 2. The City Council of the City of Rocklin finds that this section of the right-of-way to be vacated: (i) has not been used for public access for at least five (5) consecutive years; and (ii) no public money has been expended for maintenance on this section for at least five (5) consecutive years.

Section 3. From and after the date this resolution is recorded, the right-of-way vacated no longer constitutes public right-of-way.

Section 4. Pursuant to the Public Streets, Highways and Service Easement Vacation Law (Streets & Highway Code §8336 et seq.), the City Clerk shall cause a certified copy of the resolution of vacation, attested by the clerk under seal, to be recorded without acknowledgment, certificate of acknowledgment, or further proof in the office of the Recorder of the County of Placer, State of California.

PASSED AND ADOPTED this 25th day of February, 2025, by the following vote:

AYES: Councilmembers:
NOES: Councilmembers:
ABSENT: Councilmembers:
ABSTAIN: Councilmembers:

_____
Jill Gayaldo, Mayor

ATTEST:

_____
Avinta Singh, City Clerk

EXHIBIT "A"
PACIFIC STREET/RAILROAD AVENUE ALLEY
EASEMENT VACATION

All that Alley within Block D, as shown on the “Map of the Town of Rocklin,” filed in Book “A” of Maps, at Page 28, Placer County Official Records, being located within the City of Rocklin, County of Placer and State of California, more particularly described as follows:

B**EGINNING** at a point being the northwesterly corner of Lot 16 within said Block; thence from said **POINT OF BEGINNING**, along the northeasterly line of said Alley, South 28°59'59" West, a distance of 399.66 feet to the southwesterly corner of Lot 9 within said Block; thence North 61°00'01" West, a distance of 20.00 feet to the southeasterly corner of Lot 8 within said Block; thence along the southwesterly line of said Alley, North 28°59'59" East, a distance of 399.66 feet to the northeasterly corner of Lot 1 within said Block; thence South 61°00'01" East, a distance of 20.00 feet to the **POINT OF BEGINNING**.

Containing 7,993 square feet or 0.183 acres, more or less.

See Exhibit ‘B’, plat to accompany description, attached hereto and made a part hereof.

The Basis of Bearings for this survey is the line between City of Rocklin monuments R 3-4 and R 3-13, as shown on that certain record of survey entitled “City of Rocklin GPS Control Network”, filed June 16, 2005, in Book 18 of Surveys, at Page 114, Placer County Records. Said bearing is taken to bear North 68°26'11” West. All distances shown hereon are ground distances.

February 5, 2025

END OF DESCRIPTION

WOOD RODGERS, INC.
SACRAMENTO, CALIFORNIA

EXHIBIT "B"

PACIFIC STREET/ RAILROAD AVENUE ALLEY EASEMENT VACATION

CITY OF ROCKLIN
COUNTY OF PLACER STATE OF CALIFORNIA

PROFESSIONAL LAND SURVEYOR
DENNIS L. BARBER
No. 8067
STATE OF CALIFORNIA

LEGEND

RIGHT-OF-WAY TO BE VACATED

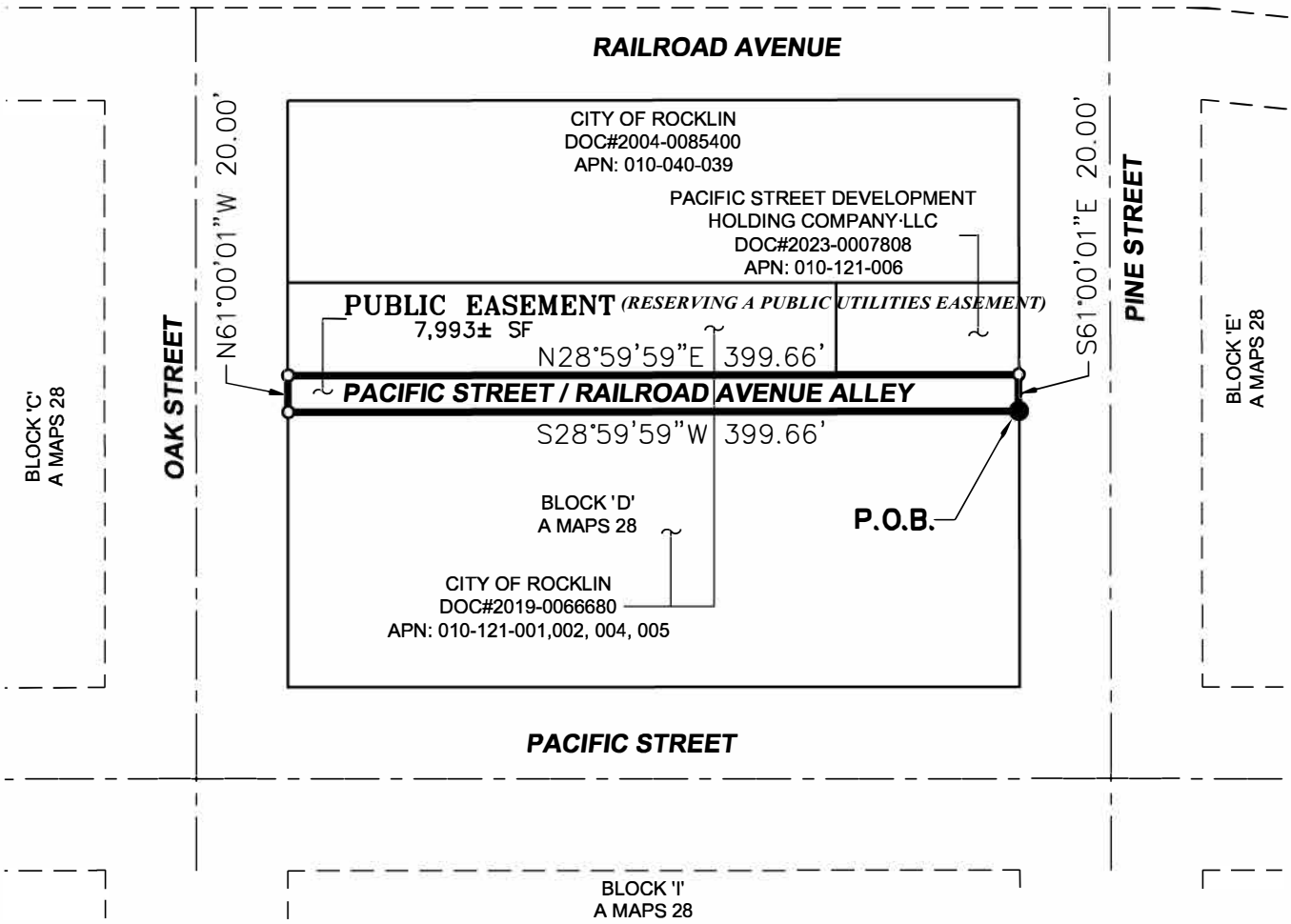

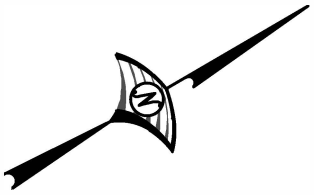

0 50 100 200

SCALE:1"= 100'

WOOD RODGERS
BUILDING RELATIONSHIPS ONE PROJECT AT A TIME
3301 C ST, BLDG. 100-B TEL 916.341.7760
SACRAMENTO, CA 95816 FAX 916.341.7767

FEBRUARY 5, 2025 3266.008 SHEET 1 OF 1

RESOLUTION NO. 2025-

RESOLUTION OF THE CITY COUNCIL OF THE CITY OF ROCKLIN AUTHORIZING THE CITY MANAGER TO EXECUTE AND RECORD GRANT DEEDS TO CREATE TWO PARCELS WITHIN THE CITY'S REAL PROPERTY LOCATED BETWEEN PACIFIC STREET, OAK STREET, RAILROAD AVENUE, AND PINE STREET

WHEREAS, the City of Rocklin owns real property at the intersections of Pine Street and Pacific Street, consisting of APNs 010-121-001, 010-121-002, 010-121-004, and 010-121-005**,** and described as Parcel 1 and Parcel 2 on the attached Exhibit "A" ("City's Property"); and

WHEREAS, City's Property also includes real property that was encumbered by an alleyway that was summarily vacated by the City Council of the City of Rocklin via Resolution No. 2025-XX on February 25, 2025, which vacation will be complete when the City causes a certified copy of the Resolution No. 2025-XX to be recorded in the Office of the Placer County Recorder, pursuant to California Streets and Highways Code Section 8336; and

WHEREAS, on November 8, 2022 the Rocklin City Council approved Resolution No. 2022-229, which approved an Affordable Housing Agreement between the City and Community Housingworks ("CHW") under which the City would agree to lease the City's Property to CHW for the construction and operation of approximately one hundred ten (110) rental housing units affordable to households of limited income, including not fewer than twenty three (23) households having incomes of not greater than thirty percent (30%) of area median income (Project) subject to CHW successfully obtaining all required land use approvals and financing commitments for the development of the project.

WHEREAS, before CHW may build its Project on City's Property, the City must reconfigure the property lines of the City-owned parcels, so that CHW does not construct any building over property lines, and is able to meet all setbacks required for building under the City's zoning regulations;

WHEREAS, CHW's engineering consultants at Wood Rodgers and City staff have prepared the attached Grant Deeds to move property lines of the City's parcels for the City Council's approval.

NOW, THEREFORE, the City Council of the City of Rocklin does resolve as follows:

Section 1. The City Manager is hereby authorized and directed to execute the Grant Deeds attached hereto as Exhibit "B", on behalf of the City Council, and is hereby authorized and directed to execute a Certificate of Acceptance for the Grant Deed.

Section 2. The City Manager is hereby authorized to execute any other document necessary to record the Grant Deeds and to have the Grant Deeds recorded in the office of the Placer County Recorder, subsequent to the recordation of the Resolution to Vacate the alley .

PASSED AND ADOPTED this 25th day of February, 2025, by the following vote:

AYES: Councilmembers:
NOES: Councilmembers:
ABSENT: Councilmembers:
ABSTAIN: Councilmembers:

_____
Jill Gayaldo, Mayor

ATTEST:

_____
Avinta Singh, City Clerk

EXHIBIT "A"

PACIFIC STREET APARTMENTS
CITY PARCEL 1 AND PARCEL 2
CITY OF ROCKLIN
COUNTY OF PLACER STATE OF CALIFORNIA

PROFESSIONAL LAND SURVEYOR
DENNIS L. BARBER
No. 8067
STATE OF CALIFORNIA

LEGEND

P.O.B. POINT OF BEGINNING
T.P.O.B. TRUE POINT OF COMMENCEMENT

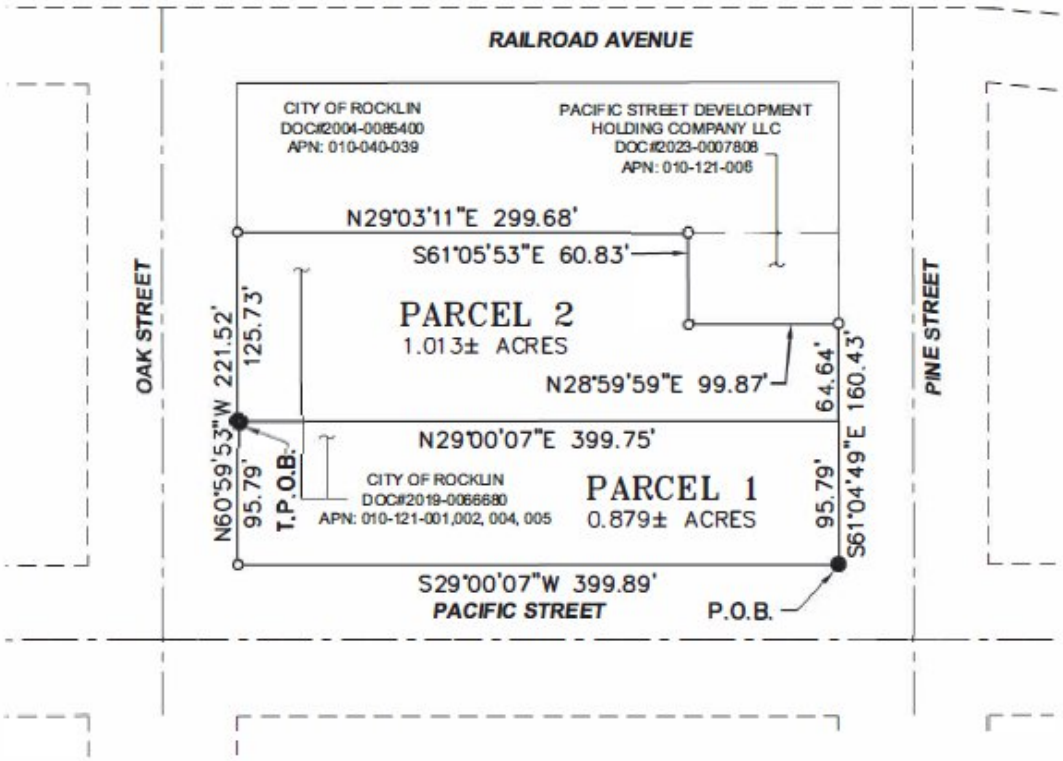

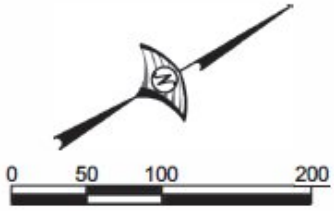

SCALE:1"= 100'

WOOD RODGERS
BUILDING RELATIONSHIPS ONE PROJECT AT A TIME
3301 C ST, BLDG. 100-B TEL 916.341.7760
SACRAMENTO, CA 95816 FAX 916.341.7767

FEBRUARY 5, 2025 3622.008 SHEET 1 OF 1

Exhibit “B” – Grant Deeds for City Parcels 1 and 2

Exhibit A- Legal Plat Project Site Showing City and CHW Owned Parcels 1-4

NO FEE DOCUMENT
GOVERNMENT CODE SECTION 6103

Recording Requested By and
When Recorded Mail To:

City of Rocklin
3970 Rocklin Road
Rocklin, CA 95677
Attn: City Clerk

The Above Space For Recorder's Use Only

GRANT DEED PARCEL 1

Project Name: Pacific Street Apartments File No.:_____
Address: Block bounded by Pacific Street, Oak Street, Railroad Avenue, and Pine Street
A.P.N.'s: 010-121-001, 010-121-002, 010-121-004, 010-121-005, and 010-121-006

THIS TRANSACTION IS EXEMPT FROM CALIFORNIA DOCUMENTARY TRANSFER TAX=$0.00, PURSUANT TO SECTION 11922 OF THE CALIFORNIA REVENUE AND TAXATION CODE; AND CITY TRANSFER TAX=$0.00; AND SURVEY MONUMENT FEE=$0.00.
THIS DOCUMENT IS EXEMPT FROM RECORDING FEES PURSUANT TO SECTION 27383 OF THE CALIFORNIA GOVERNMENT CODE.

FOR VALUABLE CONSIDERATION, receipt and sufficiency of which is hereby acknowledged,

City of Rocklin, a municipal corporation, as the owner ("Grantor") of that certain real property located in the City of Rocklin, County of Placer, State of California, ("Grantor's Property"),

hereby grants to **City of Rocklin**, a municipal corporation ("Grantee"), the following described property in the **City of Rocklin**, County of Placer, State of California, more particularly described in Exhibit "A-1" and Exhibit "B-1", attached hereto, are made a part hereof.

Executed _____, 2025. GRANTOR:

City of Rocklin, a municipal corporation

By: _____

Name: Aly Zimmermann

Title: City Manager

[*Acknowledgment and Acceptance on Next Pages*]

ACKNOWLEDGEMENT

ATTACH CURRENT NOTARY ACKNOWLEDGEMENT FORM

CERTIFICATE OF ACCEPTANCE

This is to certify that the interest in real property conveyed by this Grant of Parcel 1, dated _____ from **City of Rocklin** to the **City of Rocklin** is hereby accepted by the undersigned officer or agent on behalf of the Rocklin City Council pursuant to authority conferred by Resolution No. 2025-_____, adopted on February 25, 2025, by the City Council of the City of Rocklin, and Grantee consents to recordation thereof by its duly authorized officer.

Dated: _____, 2025 By: _____

Aly Zimmermann, City Manager

EXHIBIT "A-1"
PACIFIC STREET APARTMENTS
GRANT DEED

A portion of Lots 9 through 16 within Block D, as shown on the “Map of the Town of Rocklin,” filed in Book “A” of Maps, at Page 28, Placer County Official Records, being located within the City of Rocklin, County of Placer and State of California, more particularly described as follows:

Parcel 1:

BEGINNING at a point being the northeasterly corner of said Lot 16; thence from said **POINT OF BEGINNING**, along the southeasterly line of said Block,
South 29°00'07" West, a distance of 399.89 feet to the southeasterly corner of said Lot 9; thence along the southwesterly line of said Block, North 60°59'53" West, a distance of 95.79 feet; thence through said Lots 9 through 16; North 29°00'07" East, a distance of 399.75 feet to the northeasterly line of said Block: thence along said northeasterly line, South 61°04'49" East, a distance of 95.79 feet to the **POINT OF BEGINNING**.

Containing 0.879 acres, more or less.

See Exhibit 'B-1', Plat to accompany description, attached hereto and made a part hereof.

The Basis of Bearings for this survey is the line between City of Rocklin monuments R 3-4 and R 3-13, as shown on that certain record of survey entitled “City of Rocklin GPS Control Network”, filed June 16, 2005, in Book 18 of Surveys, at Page 114, Placer County Records. Said bearing is taken to bear North 68°26'11” West. All distances shown hereon are ground distances.

February 5, 2025

END OF DESCRIPTION

WOOD RODGERS, INC.
SACRAMENTO, CALIFORNIA

EXHIBIT "B-1"

PACIFIC STREET APARTMENTS
GRANT DEED

CITY OF ROCKLIN
COUNTY OF PLACER STATE OF CALIFORNIA

PROFESSIONAL LAND SURVEYOR
DENNIS L. BARBER
No. 8067
STATE OF CALIFORNIA

LEGEND

P.O.B. POINT OF BEGINNING
T.P.O.B. TRUE POINT OF COMMENCEMENT

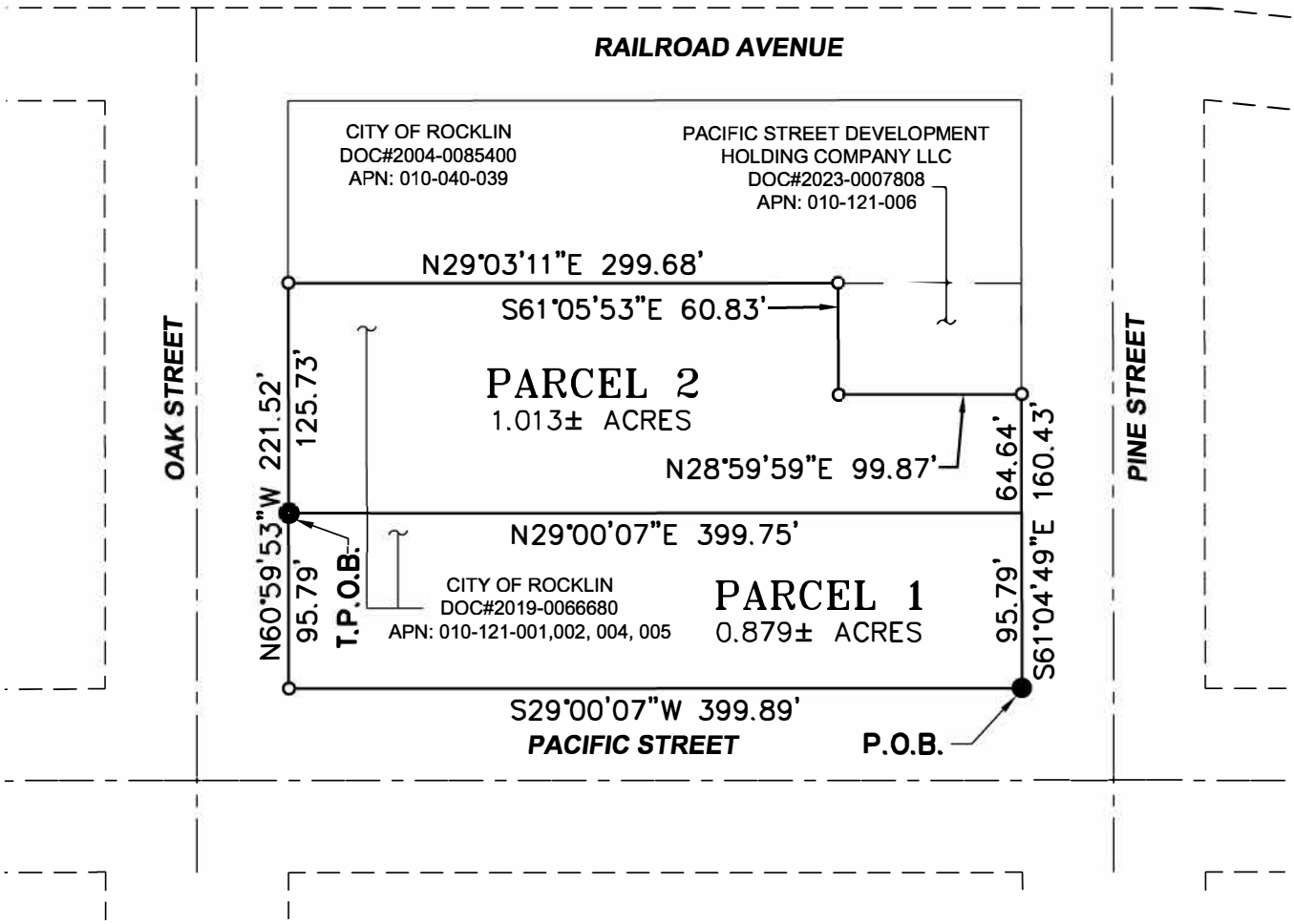

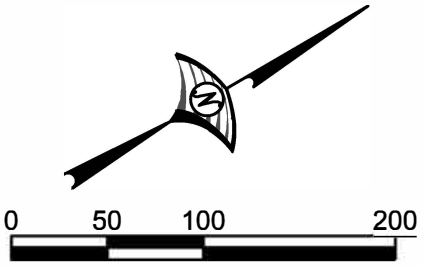

SCALE:1"= 100'

WOOD RODGERS
BUILDING RELATIONSHIPS ONE PROJECT AT A TIME
3301 C ST, BLDG. 100-B TEL 916.341.7760
SACRAMENTO, CA 95816 FAX 916.341.7767

FEBRUARY 5, 2025 3622.008 SHEET 1 OF 1

Exhibit B – Legal Plat of City Parcel 2 Merged with Parcel 4

NO FEE DOCUMENT
GOVERNMENT CODE SECTION 6103

Recording Requested By and
When Recorded Mail To:

City of Rocklin
3970 Rocklin Road
Rocklin, CA 95677
Attn: City Clerk

The Above Space For Recorder's Use Only

GRANT DEED PARCEL 2

Project Name: Pacific Street Apartments File No.:_____
Address: Block bounded by Pacific Street, Oak Street, Railroad Avenue, and Pine Street
A.P.N.'s: 010-121-001, 010-121-002, 010-121-004, 010-121-005, and 010-121-006

THIS TRANSACTION IS EXEMPT FROM CALIFORNIA DOCUMENTARY TRANSFER TAX=$0.00, PURSUANT TO SECTION 11922 OF THE CALIFORNIA REVENUE AND TAXATION CODE; AND CITY TRANSFER TAX=$0.00; AND SURVEY MONUMENT FEE=$0.00.
THIS DOCUMENT IS EXEMPT FROM RECORDING FEES PURSUANT TO SECTION 27383 OF THE CALIFORNIA GOVERNMENT CODE.

FOR VALUABLE CONSIDERATION, receipt and sufficiency of which is hereby acknowledged,

City of Rocklin, a municipal corporation, as the owner ("Grantor") of that certain real property located in the City of Rocklin, County of Placer, State of California, ("Grantor's Property"),

hereby grants to **City of Rocklin**, a municipal corporation ("Grantee"), the following described property in the **City of Rocklin**, County of Placer, State of California, more particularly described in Exhibit "A-2" and Exhibit "B-2", attached hereto, are made a part hereof.

Executed _____, 2025. GRANTOR:

City of Rocklin, a municipal corporation

By: _____

Name: Aly Zimmermann

Title: City Manager

[*Acknowledgment and Acceptance on Next Pages*]

ACKNOWLEDGEMENT

ATTACH CURRENT NOTARY ACKNOWLEDGEMENT FORM

CERTIFICATE OF ACCEPTANCE

This is to certify that the interest in real property conveyed by this Grant of Parcel 2, dated _____ from **City of Rocklin** to the **City of Rocklin** is hereby accepted by the undersigned officer or agent on behalf of the Rocklin City Council pursuant to authority conferred by Resolution No. 2025-_____, adopted on February 25, 2025, by the City Council of the City of Rocklin, and Grantee consents to recordation thereof by its duly authorized officer.

Dated: _____, 2025 By: _____

Aly Zimmermann, City Manager

EXHIBIT "A-2"
PACIFIC STREET APARTMENTS
GRANT DEED

A portion of Lots 3 through 16 within Block D, as shown on the “Map of the Town of Rocklin,” filed in Book “A” of Maps, at Page 28, Placer County Official Records, being located within the City of Rocklin, County of Placer and State of California, more particularly described as follows:

Parcel 2:

BEGINNING at a point being the northeasterly corner of said Lot 16; thence from said **POINT OF BEGINNING**, along the southeasterly line of said Block,
South 29°00'07" West, a distance of 399.89 feet to the southeasterly corner of said Lot 9; thence along the southwesterly line of said Block, North 60°59'53" West, a distance of 95.79 feet to the **TRUE POINT OF BEGINNING;** thence continuing along said southwesterly line, North 60°59'53" West, a distance of 125.73 feet; thence through said Lots 8 through 3, North 29°03'11" East, a distance of 299.68 feet to the northeasterly line of said Lot 3; thence along said northeasterly line, South 61°05'53" East, a distance of 60.83 feet to the centerline of the alley as shown on said Map ; thence along said centerline, North 28°59'59" East, a distance of 99.87 feet to the northeasterly line of said Block, thence along said northeasterly line, South 61°04'49" East, a distance of 64.64 feet; thence through said Lots 16 through 9, South 29°00'07" West, a distance of 399.75 feet to the **TRUE POINT OF BEGINNING**.

Containing 1.013 acres, more or less.

See Exhibit 'B-2', Plat to accompany description, attached hereto and made a part hereof.

The Basis of Bearings for this survey is the line between City of Rocklin monuments R 3-4 and R 3-13, as shown on that certain record of survey entitled “City of Rocklin GPS Control Network”, filed June 16, 2005, in Book 18 of Surveys, at Page 114, Placer County Records. Said bearing is taken to bear North 68°26'11” West. All distances shown hereon are ground distances.

February 5, 2025

END OF DESCRIPTION

WOOD RODGERS, INC.
SACRAMENTO, CALIFORNIA

EXHIBIT "B-2"

PACIFIC STREET APARTMENTS
GRANT DEED

CITY OF ROCKLIN
COUNTY OF PLACER STATE OF CALIFORNIA

PROFESSIONAL LAND SURVEYOR
DENNIS L. BARBER
No. 8067
STATE OF CALIFORNIA

LEGEND

P.O.B. POINT OF BEGINNING
T.P.O.B. TRUE POINT OF COMMENCEMENT

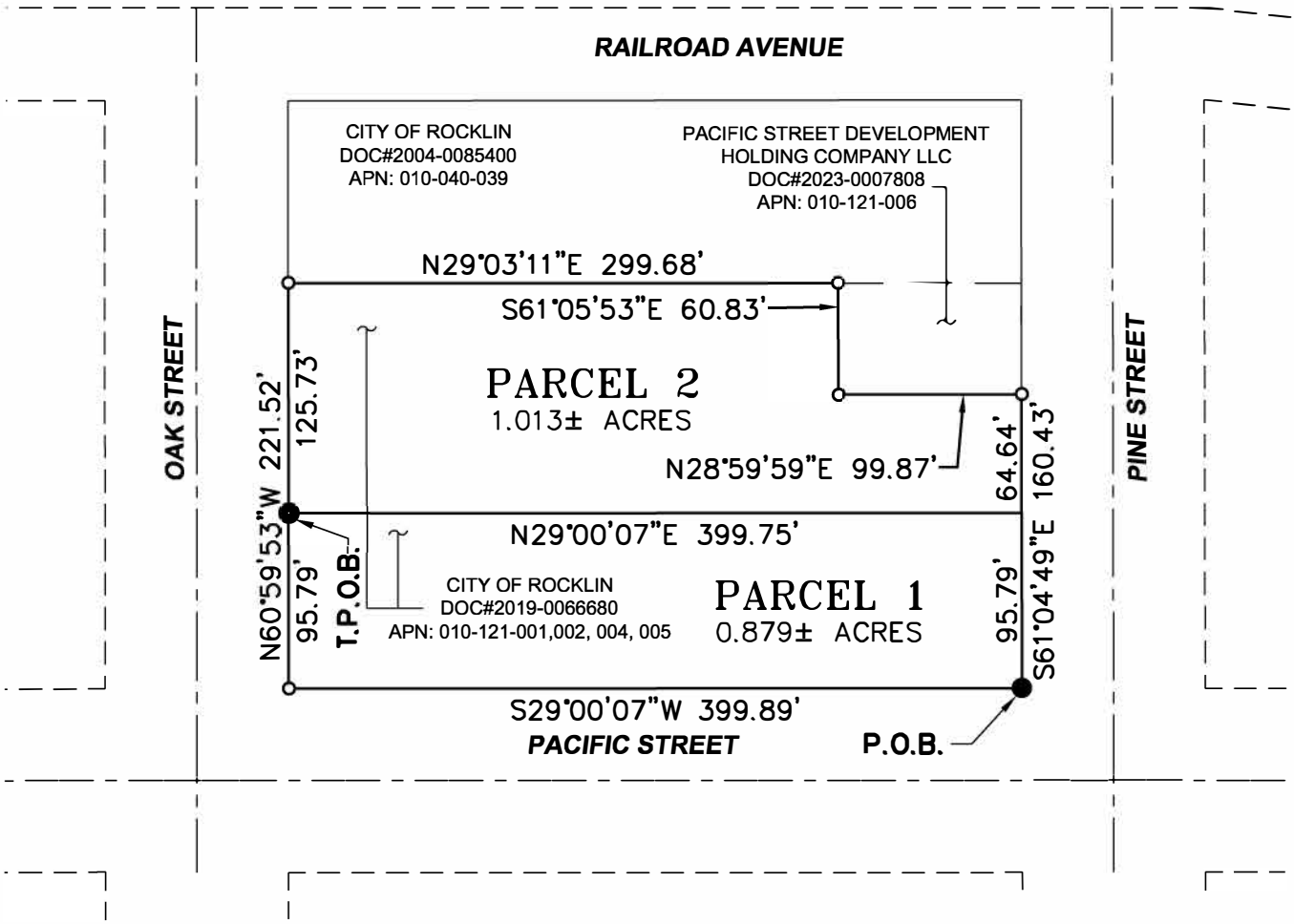

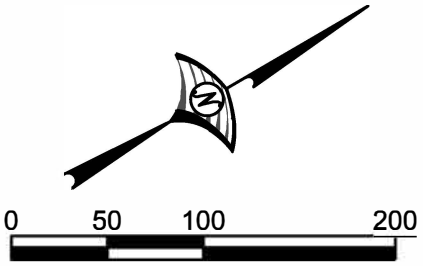

SCALE:1"= 100'

WOOD RODGERS
BUILDING RELATIONSHIPS ONE PROJECT AT A TIME
3301 C ST, BLDG. 100-B TEL 916.341.7760
SACRAMENTO, CA 95816 FAX 916.341.7767

FEBRUARY 5, 2025 3622.008 SHEET 1 OF 1

RESOLUTION NO. 2025-

RESOLUTION OF THE CITY COUNCIL OF THE CITY OF ROCKLIN ACCEPTING AND AUTHORIZING THE CITY MANAGER TO RECORD A GRANT DEED FROM COMMUNITY HOUSINGWORKS FOR THE REAL PROPERTY LOCATED ON THE SOUTHWEST SIDE OF PINE STREET BETWEEN RAILROAD AVENUE AND PACIFIC STREET/APN 010-121-006 AND AUTHORIZING THE CITY MANAGER TO EXECUTE AND RECORD A GRANT DEED ON BEHALF OF THE CITY TO MERGE THE COMMUNITY HOUSINGWORKS PARCEL WITH ADJACENT CITY PROPERTY

WHEREAS, the City of Rocklin owns real property at the intersections of Pine Street and Pacific Street, consisting of Assessor Parcel Numbers 010-121-001, 010-121-002, 010-121-004, 010-121-005, and 010-121-006 and described as Parcel 1 and Parcel 2 on the attached Exhibit A (which Exhibit shows the current Parcel property lines);

WHEREAS, on November 8, 2022 the Rocklin City Council approved Resolution No. 2022-229, which approved an Affordable Housing Agreement between the City and Community Housingworks (CHW) under which the City would agree to ground lease the site to CHW for the construction and operation of approximately one hundred ten (110) rental housing units affordable to households of limited income, including not fewer than twenty three (23) households having incomes of not greater than thirty percent (30%) of area median income (the "Project") subject to CHW successfully obtaining all required land use approvals and financing commitments for the development of the project;

WHEREAS, subsequent to the approval of the Affordable Housing Agreement, CHW acquired a parcel described as Assessor Parcel Numbers 010-121-006 and described as Parcel 4 on the attached Exhibit A. Parcel 4 is adjacent to City owned property. CHW has designed the project to incorporate Parcel 4 into the Project design, where the building footprint is on the property line of Parcel 4;

WHEREAS, per the City's Zoning Code, CHW may not construct a building over the property line of Parcel 4 and must abide by the required setbacks for building under the City's zoning regulations;

WHEREAS, therefore, to allow for CHW to comply with the City's setback requirements, CHW desires to transfer Parcel 4 to the City when they have received all the necessary financing for the Project, including federal tax credits. The City must issue all required discretionary entitlements and complete all necessary discretionary acts before CHW can apply for the federal tax credits;

WHEREAS, City Council's authorization to accept Parcel 4 and to change property line boundaries to merge Parcel 4 with adjacent City property Parcel 2 are both

discretionary acts that must be completed before CHW can apply for their federal tax credits; and

WHEREAS, the City Council may give approval by this Resolution of the acceptance of Parcel 4 and the merging of Parcel 4 with adjacent City property contingent on CHW delivering an executed Grant Deed for Parcel 4 to the City Manager.

NOW, THEREFORE, the City Council of the City of Rocklin does resolve as follows:

Section 1. If CHW executes and delivers to the City Manager a Grant Deed, or legal equivalent, transferring ownership of Parcel 4 to the City, the City Manager is hereby authorized and directed to accept the property on behalf of the City Council, and is hereby authorized and directed to execute a Certificate of Acceptance for the Grant Deed, and to have the Grant Deed recorded in the office of the Placer County Recorder.

Section 2. If CHW transfers Parcel 4 to the City, the Community Development Director or designee is hereby authorized and directed to prepare a Grant Deed to merge Parcel 4 with the adjacent City property Parcel 2 with the depiction attached hereto as Exhibit B (Legal Plat), and the City Manager is hereby authorized to execute any other document(s) necessary to record the Grant Deed and to have the Grant Deed recorded in the office of the Placer County Recorder.

PASSED AND ADOPTED this 25th day of February, 2025, by the following vote:

AYES: Councilmembers:
NOES: Councilmembers:
ABSENT: Councilmembers:
ABSTAIN: Councilmembers:

_____
Jill Gayaldo, Mayor

ATTEST:

_____
Avinta Singh, City Clerk

EXHIBIT "A"

PACIFIC STREET APARTMENTS
CURRENT PARCELS
CITY OF ROCKLIN
COUNTY OF PLACER STATE OF CALIFORNIA

PROFESSIONAL LAND SURVEYOR
DENNIS L. BARBER
No. 8067
STATE OF CALIFORNIA

LEGEND

P.O.B. POINT OF BEGINNING
T.P.O.B. TRUE POINT OF COMMENCEMENT

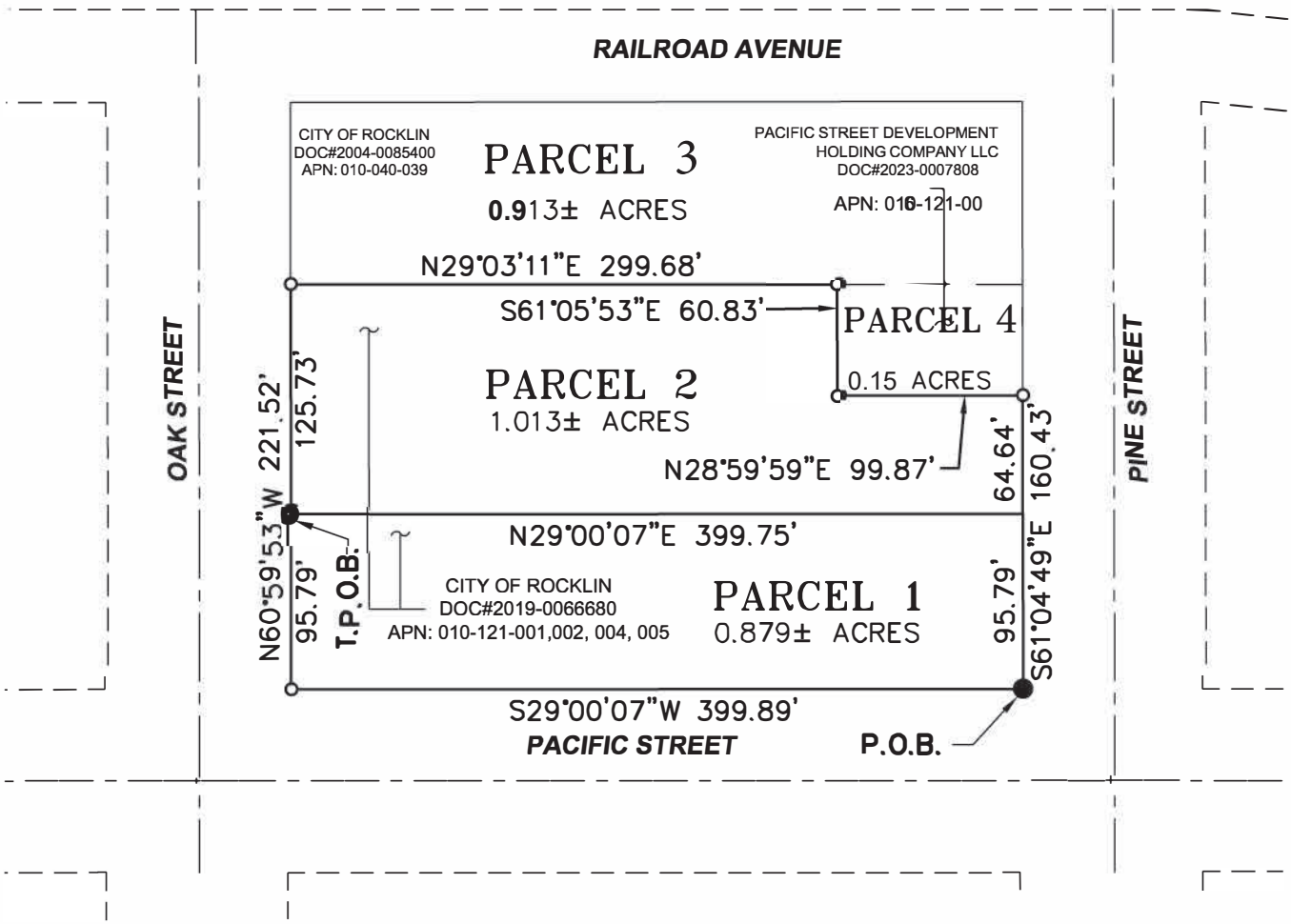

0 50 100 200

SCALE:1"= 100'

WOOD RODGERS
BUILDING RELATIONSHIPS ONE PROJECT AT A TIME
3301 C ST, BLDG. 100-B TEL 916.341.7760
SACRAMENTO, CA 95816 FAX 916.341.7767

FEBRUARY 5, 2025 3622.008 SHEET 1 OF 1

EXHIBIT "B"

PACIFIC STREET APARTMENTS
ULTIMATE PARCEL LAYOUT

CITY OF ROCKLIN
COUNTY OF PLACER STATE OF CALIFORNIA

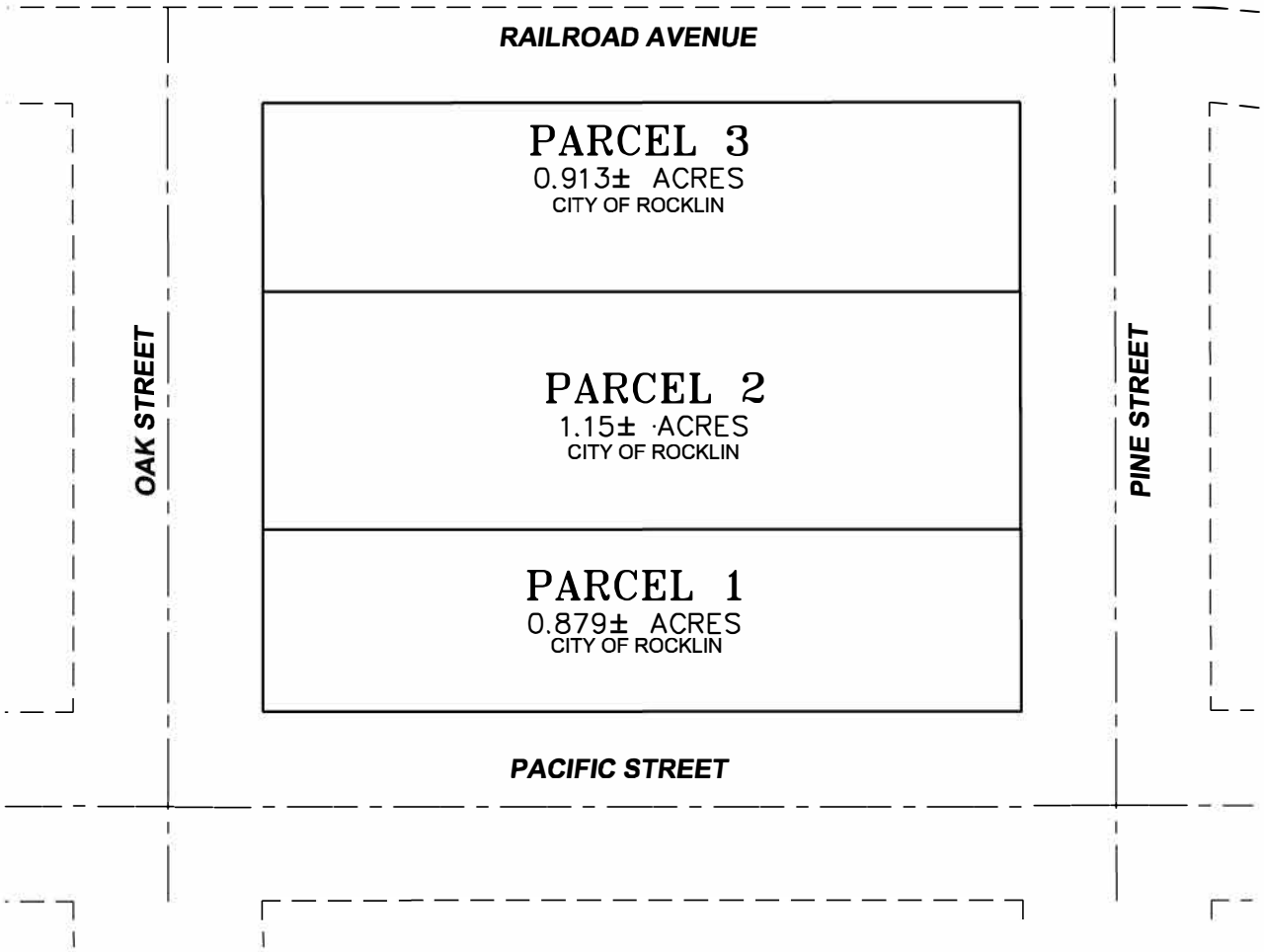

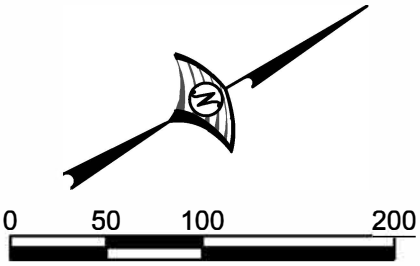

SCALE:1"= 100'

WOOD RODGERS
BUILDING RELATIONSHIPS ONE PROJECT AT A TIME
3301 C ST, BLDG. 100-B TEL 916.341.7760
SACRAMENTO, CA 95816 FAX 916.341.7767

FEBRUARY 5, 2025 3622.008 SHEET 1 OF 1

ROCKLIN
CALIFORNIA

City Council Staff Report

Subject: Quarry Park Amphitheater Production Management Agreement - Amendment No. 1

Date: February 25, 2025

Submitted By: Charles Wilson, Recreation Coordinator
Veronica Tracy, Parks and Recreation Director

Department: Parks and Recreation

Recommendation:
Adopt a Resolution of the City Council of the City of Rocklin Approving and Authorizing the City Manager to Execute an Amended Agreement With Push the Show, LLC (majority-owned by Ineffable Music Group, Inc.) for Production Management at Quarry Park Amphitheater.

Background:
On September 5, 2023, staff issued a Request for Proposal (RFP) for production management at Quarry Park Amphitheater. The goal was to secure a qualified company with expertise in producing special events, concerts, and festivals to support year-round operations at the venue. Services include production, marketing, talent acquisition, staffing, and hospitality management. The City received one qualified response from Ineffable Music Group, Inc. (Ineffable). Following interviews and proposal evaluations, staff determined that Ineffable was a qualified candidate to operate the venue. The initial agreement was approved by the City Council on January 9, 2024.

The 2024 initial season under Ineffable's management resulted in 13 successful concerts with approximately 16,000 tickets sold, demonstrating the effectiveness of Ineffable's operational strategy and marketing approach, reinforcing the long-term viability of the partnership.

The agreement originally designated that the City would allocate $25,000 per year toward marketing initiatives and assistance for amphitheater operations. This provision has now been removed from the agreement, ensuring that Ineffable will assume the primary responsibility for marketing efforts without City's additional financial contributions.

Fiscal Impact:
With the removal of the City's $25,000 annual marketing allocation, the City will no longer have direct financial obligations related to amphitheater marketing. The Production Management Agreement remains structured to be self-supporting, with the City continuing to receive per-ticket revenue and additional payments for sold-out events.

ATTACHMENTS:

1. Resolution
2. Resolution Exhibit A - Amendment No. 1
3. Original Agreement

RESOLUTION NO. 2025-

RESOLUTION OF THE CITY COUNCIL OF THE CITY OF ROCKLIN APPROVING AND AUTHORIZING THE CITY MANAGER TO EXECUTE AN AMENDED AGREEMENT WITH PUSH THE SHOW, LLC (MAJORITY-OWNED BY INEFFABLE MUSIC GROUP, INC.) FOR PRODUCTION MANAGEMENT AT QUARRY PARK AMPHITHEATER

WHEREAS, the City of Rocklin owns and operates Quarry Park Amphitheater, located within Quarry Park; and

WHEREAS, on September 5, 2023, the City issued a Request for Proposal for Production Management at Quarry Park Amphitheater to secure a qualified company with experience in producing special events, concerts, and festivals to assist with year-round operations; and

WHEREAS, the City received one qualified response to the Request for Proposal from Ineffable Music Group, Inc., and determined that Ineffable was a suitable candidate to manage the venue; and

WHEREAS, the City Council approved an agreement with Ineffable Music Group, Inc., on January 9, 2024, resulting in a successful first season, including 13 concerts and approximately 16,000 tickets sold; and

WHEREAS, the original agreement allocated $25,000 per year from the City toward marketing initiatives and assistance for amphitheater operations, but this provision has now been removed, ensuring that Ineffable assumes full responsibility for marketing efforts; and

WHEREAS, the amended agreement maintains the self-sustaining structure of the Production Management Agreement while ensuring the City continues to receive per-ticket revenue and additional payments for sold-out events; and

NOW, THEREFORE, BE IT RESOLVED by the City Council of the City of Rocklin as follows:

Section 1. The City Council of the City of Rocklin hereby approves and authorizes the City Manager to execute an amended Agreement for Production Management at Quarry Park Amphitheater with Push the Show, LLC (majority owned by Ineffable Music Group, Inc.), attached hereto and incorporated herein as Exhibit A.

PASSED AND ADOPTED this 25th day of February 2025, by the following vote:

AYES: Councilmembers:
NOES: Councilmembers:
ABSENT: Councilmembers:
ABSTAIN: Councilmembers:

_____
Jill Gayaldo, Mayor

ATTEST:

_____
Avinta Singh, City Clerk

AMENDMENT NO. 1
TO CONTRACT FOR SERVICES BETWEEN
THE CITY OF ROCKLIN AND PUSH THE SHOW, LLC

This Amendment is entered into on February 25, 2025, by and between the City of Rocklin, a municipal corporation ("City") and Push the Show, LLC, a California limited liability company ("Contractor") (collectively the "Parties") who agree as follows:

RECITALS

WHEREAS, the City Council of the City of Rocklin adopted Resolution No. 2024-013, on January 9, 2024, authorizing the City Manager to enter into an agreement with Ineffable Music Group, Inc., a California corporation ("Ineffable"), to provide production management services at the Quarry Park Amphitheater for the City; and

WHEREAS, Push the Show, LLC, a California limited liability company ("Push the Show"), is a majority-owned and fully controlled affiliate entity of Ineffable, and pursuant to its Operating Agreement, Ineffable "and its officers" is the managing member of Push the Show. Ineffable operates all of its concert production management activities through Push the Show; and

WHEREAS, the City and Contractor entered into a Contract for Services dated April 9, 2024, for production management at Quarry Park Amphitheater between the City of Rocklin and Push the Show, LLC, approved and ratified on April 23, 2024, by Resolution No. 2024-91; and

WHEREAS, the Parties desire to amend the Agreement to eliminate the City's responsibility to provide $25,000 per year in paid marketing initiatives and assistance to Amphitheater operations.

AGREEMENT

NOW, therefore, the City and Contractor hereby amend the Contract for Services as follows:

1. The "Marketing" section of Exhibit A shall be amended to delete the following:

   "City will allocate twenty-five thousand dollars ($25,000) per year in paid Marketing initiatives and assistance to Amphitheater operations."

   All other terms of Exhibit A shall remain unchanged.

2. The "City Operations Costs and Revenues" section of Exhibit C shall be amended as follows:

   a. The following provision shall be deleted:

   "City shall be responsible for twenty-five thousand dollars ($25,000) per year in paid Marketing initiatives and assistance to Amphitheater operations."

b. The following provision shall be added:

"City agrees to market the Amphitheater based on Push the Show's marketing plan upon approval and available funding by City."

All other terms of Exhibit C shall remain unchanged.

Except as set forth in this Amendment, the Contract for Services is unaffected and shall continue in full force and effect in accordance with its terms. If there is a conflict between this Amendment and the Contract for Services, the terms of this Amendment will prevail.

Executed as of the date first written above.

CONTRACTOR

By: _____
Thomas Cussins, CEO of Ineffable Music Group, Inc., Managing Member of Push the Show, LLC

By: _____
Matthew Bailey, Secretary of Ineffable Music Group, Inc., Managing Member of Push the Show, LLC

CITY

By: _____
Aly Zimmermann, City Manager

APPROVED AS TO FORM:

By: _____
Crystal Hodgson, Assistant City Attorney

ATTEST:

By: _____
Avinta Singh, City Clerk

DocuSign Envelope ID: C212EA6E-6386-4575-9527-FF79F50DF487

CONTRACT FOR SERVICES

THIS CONTRACT is made on April 9, 2024, by and between the CITY OF ROCKLIN a municipal corporation ("City"), and PUSH THE SHOW, LLC, a California limited liability company ("Contractor,") who mutually agree as follows:

RECITALS

WHEREAS, the City Council of the City of Rocklin adopted Resolution No. 2024-013, on January 9, 2024, authorizing the City Manager to enter into an agreement with Ineffable Music Group, Inc., a California corporation ("Ineffable"), to provide production management services at the Quarry Park Amphitheater for the City; and

WHEREAS, Push the Show, LLC, a California limited liability company ("Push the Show"), is a majority-owned and fully controlled affiliate entity of Ineffable, and pursuant to its Operating Agreement, Ineffable "and its officers" is the managing member of Push the Show; and

WHEREAS, Ineffable operates all of its concert production management activities through Push the Show.

AGREEMENT

NOW, therefore, the City and Push the Show hereby agree to enter into this agreement under the terms as follows:

1. SCOPE OF SERVICES

Subject to the terms and conditions set forth in this agreement, Contractor shall provide to the City the services described in the Scope of Work, Exhibit A. Contractor shall provide the services at the time, place and in the manner specified in Exhibits A and/or B. Contractor shall not be compensated for services outside the scope of Exhibit A unless prior to the commencement of the services: (a) Contractor notifies the City and City agrees the services are outside the scope of Exhibit A; (b) Contractor estimates the additional compensation required for these additional services; and (c) City after notice, approves in writing a supplemental agreement specifying the additional services and the amount of compensation therefore. City shall have no obligation whatsoever under this agreement or any supplemental agreement, unless and until the agreement or supplemental agreement is approved by the City Manager, the City Manager's authorized designee, or by the Rocklin City Council, as required by the Rocklin Municipal Code or other local law or policy.

2. COMPENSATION

A. The City shall pay Contractor for the services rendered pursuant to this agreement at the times and in the manner set forth in the Scope of Services, Exhibit A, the Schedule for Performance, Exhibit B, and in accordance with the Schedule of Fees in Exhibit C.

B. During performance of the agreement and for a period of three (3) years after completing all services, Contractor shall maintain all accounting and financial records related to this Agreement, including but not limited to records of Contractor's costs for all services performed under this agreement and records of Contractor's reimbursable expenses, in accordance with

generally accepted accounting practices, and shall keep and make the records available for inspection and audit by representatives of the City upon reasonable written notice.

C. Contractor shall pay when and as due, any and all taxes incurred as a result of Contractor's compensation hereunder, including estimated taxes, and shall provide City with proof of payment upon request. Contractor hereby agrees to indemnify City for any claims, losses, costs, fees, liabilities, damages or injuries suffered by City arising out of Contractor's breach of this section.

3. FACILITIES AND EQUIPMENT

Contractor shall at its sole cost and expense, furnish all facilities and equipment that may be required for Contractor to perform services pursuant to this agreement. City shall furnish to Contractor, only the facilities and equipment listed in Exhibit A (if any) according to any terms and conditions set forth in Exhibit A.

4. TERM OF CONTRACT

A. The term of this Agreement shall be from the date of execution ("Commencement Date") up to and including December 31, 2026 ("Original Term"), unless earlier terminated pursuant to this agreement. City and Contractor agree to discuss amendments to current agreement after the first operating season.

City and Contractor shall have the option to extend the term for up to two (2) additional one (1) year terms, for a total potential Extended Term of two (2) years, by mutual agreement. During the Extended Term of this Agreement, if any, City and Contractor shall be bound by all obligations, covenants, and agreements of this Agreement..

B. The services of Contractor are to commence upon execution of this Contract and shall be undertaken and completed in accordance with the Schedule of Performance attached hereto and incorporated herein by this reference as **Exhibit B.**

5. SUSPENSION/TERMINATION:

A. **Suspension**. City shall have the right at any time to temporarily suspend Contractor's performance hereunder, in whole or in part, where City determines that allowing Contractor to perform such suspended services would present a substantial risk to public health, safety or welfare by giving written notice of suspension to Contractor that sets forth the facts and circumstances that support the City's determination. If City gives such notice, Contractor shall immediately suspend those activities under this Contract. City shall not unreasonably withhold or delay the lifting of any such suspension where the facts and circumstances that support the City's determination no longer exist.

B. **Immediate Termination**. This Contract may be immediately terminated by City for any of the reasons set forth under Subsection 5.C of this Contract. If the agreement is terminated by the City:

i. Contractor shall immediately cease rendering services pursuant to this agreement;
ii. Contractor shall, not later than five days after such notice of termination, deliver to City copies of all information prepared pursuant to this agreement;

iii. City shall pay Contractor the reasonable value of services rendered by Contractor prior to termination; provided however, City shall not in any manner be liable for lost profits that might have been made by Contractor had the agreement not been terminated or had Contractor completed the services required by this agreement. Contractor shall furnish to City such financial information as in the judgment of the City is necessary for City to determine the reasonable value of the services rendered by Contractor. The foregoing is cumulative and does not affect any right or remedy that City may have in law or equity.

C. Reasons for immediate termination pursuant to Subsection 5.B includes any of the following:

i. In the event of an accident or accidents resulting from Contractor's negligent operation of the Amphitheater which causes severe injury or death.
ii. Due to cancellation of or reduction in any required insurance coverage as provided herein.
iii. For Contractor's violation of the assignment or subcontracting provisions of this Contract.
iv. Contractor allows the use of fireworks or pyrotechnics without the express, written approval by City, which said approval is in City's sole discretion.
v. Destruction, casualty or taking of more than ten percent (10%) of the Amphitheater, if City does not elect to rebuild.
vi. The filing of any bankruptcy petition by Contractor or any permitted assignee, or the filing of any liens against the Amphitheater, if the lien is not removed within thirty (30) days' notice thereof.

D. **Default; Right to Cure**. Any failure by a party to this Contract to observe or perform a provision of this Contract, other than those listed in Subsection 5.C, where such failure continues for thirty (30) calendar days, or as otherwise detailed herein, after written notice of such failure, shall constitute a default and breach of this Contract. However, if the nature of the default does not involve a financial obligation and is such that it cannot be reasonably cured within the thirty (30) calendar day period, the offending party shall not be deemed to be in default if an effective cure is commenced within the thirty (30) calendar day period and thereafter diligently prosecuted to completion; provided, however, that in no event shall such default remain uncured for more than ninety (90) calendar days. Upon default by either party, which remains uncured beyond any reasonable notice and cure period as set forth herein, the non-defaulting party shall have the right to terminate this Contract by providing written notice to the other party.

E. Notwithstanding any other provisions of this Contract, Contractor shall not be relieved of liability to the City for damages sustained by the City by virtue of any breach of this Contract by Contractor, and the City may withhold any payments due to Contractor until such time as the exact amount of damages, if any, due the City from Contractor is determined.

6. INDEPENDENT CONTRACTOR

Contractor enters into this Contract as an independent contractor and not as an employee or agent of the City. Contractor shall have no power or authority by this Contract to act on behalf of City in any capacity whatsoever as an agent, or to bind the City in any respect or to any obligations whatsoever. Nothing in this Contract shall be construed to be inconsistent with this relationship or status. All employees, agents, contractors or subcontractors hired or retained by the Contractor are employees, agents, contractors or subcontractors of the Contractor and not of the City. The

City shall not be obligated in any way to pay any wage claims or other claims made against Contractor by any such employees, agents, contractors or subcontractors, or any other person resulting from performance of this agreement.

7. AMENDMENTS, CHANGES OR MODIFICATIONS

Amendments, changes or modifications in the terms of this Contract may be made at any time by mutual written agreement between the parties hereto and shall be signed by the persons authorized to bind the parties hereto.

8. EXTENSIONS OF TIME

Contractor may, for good cause, request extensions of time to perform the services required hereunder. Such extensions shall be authorized in advance by the City in writing and shall be incorporated in written amendments to this Contract or the attached Work Program in the manner provided in Section 7.

9. PROPERTY OF CITY

It is mutually agreed that all materials prepared by the Contractor under this Contract shall become the property of the City, and the Contractor shall have no property right therein whatsoever. Immediately upon termination, the City shall be entitled to, and the Contractor shall deliver to the City, all data, drawings, specifications, reports, estimates, summaries and other such materials as may have been prepared or accumulated to date by the Contractor in performing this Contract which is not Contractor's privileged information, as defined by law, or Contractor's personnel information, along with all other property belonging exclusively to the City which is in the Contractor's possession.

10. COMPLIANCE WITH ALL LAWS:

Contractor shall keep itself fully informed of, shall observe and comply with, and shall cause any and all persons, firms or corporations employed by it or under its control to observe and comply with, all applicable laws, ordinances, and codes of federal, State and local governments, which in any manner affect those engaged or employed on the work described by this Contract or the materials used or which in any way affect the conduct of the work, and shall commit no trespass on any public or private property in performing any of the work authorized by this Contract.

For all leases and purchases of materials, equipment, supplies or other tangible personal property used to perform the agreement and shipped from outside California, the Contractor and any subcontractors leasing or purchasing such materials, equipment, supplies or other tangible personal property shall obtain a Use Tax Direct Payment Permit or Seller's Permit from the California State Board of Equalization, in accordance with the applicable SBE criteria and requirements. This provision applies in all instances unless prohibited by the funding source for the agreement.

11. WARRANTIES AND RESPONSIBILITIES - CONTRACTOR

A. Contractor agrees and represents that it is qualified to properly provide the services set forth in **Exhibit "A"** in a manner which is consistent with the generally accepted standards of Contractor's profession.

B. Contractor is duly licensed, qualified and experienced to perform the services set forth in the Scope of Services, Exhibit A. Contractor represents and warrants that Contractor has all licenses, permits, qualifications and approvals of whatsoever nature that are legally required for Contractor to practice its profession or provide any services under this agreement. Contractor represents and warrants that Contractor shall, at its sole cost and expense, keep in effect or obtain at all times during the term of this agreement, any licenses, permits and approvals that are legally required for Contractor to practice its profession or provide such services. If Contractor is an out of state corporation, Contractor further warrants and represents that it possesses a valid certification of qualification to transact business in the State of California issued by the California Secretary of State.

C. Contractor shall perform all services required pursuant to this agreement in the manner and according to the standards currently observed by a competent practitioner of Contractor's profession in California. Contractor shall devote such time and effort to the performance of services pursuant to this agreement as is necessary for the satisfactory and timely performance of Contractor's obligations under this agreement. Neither party shall be considered in default of this agreement to the extent that party's performance is prevented or delayed by any cause that is beyond the reasonable control of that party.

D. All products of whatsoever nature that Contractor delivers to City pursuant to this Agreement shall be prepared in a professional manner and conform to the standards of quality normally observed by a person currently practicing in Contractor's profession, and shall be provided in accordance with any scope of services or schedule of performance specified in Exhibits A or B.

E. Contractor shall assign only competent personnel to perform services pursuant to this agreement. Contractor shall designate a project manager who at all times shall represent the Contractor before the City on all matters relating to this Contract. The project manager shall continue in such capacity unless and until he or she is removed at the request of the City, is no longer employed by Contractor, or is replaced with the written approval of the City, which approval shall not be unreasonably withheld. Contractor shall notify City in writing, of any other changes in Contractor's staff assigned to perform the services required under this agreement, prior to any such performance. In the event the City desires the removal of any person assigned by Contractor to perform services pursuant to this Contract, City shall provide written notice to Contractor that Contractor has no more than fourteen (14) calendar days to address the person's performance or remove that person from the assignment to perform services pursuant to this Contract. If after fourteen (14) calendar days the City, in its sole discretion, determines that such person is still not performing in accordance with the standards required herein, Contractor shall remove such person immediately upon receiving notice from the City of its desire for the removal of such person.

F. Contractor agrees and represents that the work performed under this Contract shall be in accordance with applicable federal, State and local law.

G. Contractor shall provide corrective services without charge to the City for services which fail to meet the above professional and legal standards and which are reported to Contractor in writing within sixty (60) days of discovery. Should Contractor fail or refuse to perform promptly its obligations, the City may render or undertake performance thereof and the Contractor agrees it has satisfied itself by its own investigation and research regarding the conditions affecting the work to be done and labor and materials needed, and that its decision to execute this agreement is based on such independent investigation and research. Contractor shall be

liable for any expenses thereby incurred.

12. SUBCONTRACTING

None of the services covered by this Contract shall be subcontracted without the prior written consent of the City, which will not be unreasonably withheld. Contractor shall be as fully responsible to the City for the negligent acts and omissions of its contractors and subcontractors, and of persons either directly or indirectly employed by them, as it is for the negligent acts and omissions of persons directly employed by Contractor.

13. ASSIGNABILITY

Contractor shall not assign or transfer any interest in this Contract whether by assignment or novation, without the prior written consent of the City. The City has a strong interest in the qualifications and capability of the persons and entities that will fulfill the obligations imposed on Contractor under this agreement. However, claims for money due or to become due Contractor from the City under this Contract may be assigned to a financial institution, or to a trustee in bankruptcy, without such approval. Notice of any assignment or transfer whether voluntary or involuntary shall be furnished promptly to the City.

14. INTEREST IN CONTRACT

Contractor covenants that neither it, nor any of its employees, agents, contractors, or subcontractors has any interest, nor shall they acquire any interest, direct or indirect, in the subject of the Contract, nor any other interest which would conflict in any manner or degree with the performance of its services hereunder. Contractor shall make all disclosures required by the City's conflict of interest code in accordance with the category designated by the City, unless the City Manager determines in writing that Contractor's duties are more limited in scope than is warranted by the category designated by the City code and that a narrower disclosure category should apply. Contractor also agrees to make disclosure in compliance with the City conflict of interest code if, at any time after the execution of this Contract, City determines and notifies Contractor in writing that Contractor's duties under this Contract warrant greater disclosure by Contractor than was originally contemplated. Contractor shall make disclosures in the time, place and manner set forth in the conflict of interest code and as directed by the City.

15. MATERIALS CONFIDENTIAL

To the extent permitted by law, all of the materials prepared or assembled by Contractor pursuant to performance of this Contract are confidential and Contractor agrees that they shall not be made available to any individual or organization without the prior written approval of the City, except by court order.

16. LIABILITY OF CONTRACTOR-NEGLIGENCE

Contractor shall be responsible for performing the work under this Contract in a manner which is consistent with the generally-accepted standards of the Contractor's profession and shall be liable for its own negligence and the negligent acts of its employees, agents, contractors and subcontractors. The City shall have no right of control over the manner in which the work is to be done but only as to its outcome, and shall not be charged with the responsibility of preventing risk to Contractor or its employees, agents, contractors or subcontractors.

17. INDEMNITY AND LITIGATION, COSTS

To the fullest extent permitted by law, Contractor shall hold harmless, defend at its own expense, and indemnify the City, its officers, officials, agents, employees and volunteers against any and all claims, damages, demands, liability, costs, losses and expenses, including without limitation court costs and reasonable attorneys' fees, arising from all acts or omissions of Contractor, or its officers, agents or employees in rendering services under this Agreement; excluding however, such liability, claims, losses, damages or expenses arising from the City's sole negligence, or willful acts. The provisions of this paragraph shall survive termination or suspension of this Contract. These Indemnification provisions are independent of and shall not in any way be limited by the Insurance requirements of this agreement. City approval of the Insurance required by this Agreement does not in any way relieve the Contractor from liability under this section.

18. CONTRACTOR TO PROVIDE INSURANCE

Contractor agrees to have and maintain the policies set forth below, against claims for injuries to persons or damages to property which may arise from or in connection with the performance of the work hereunder by the Contractor, its agents, representatives, or employees. All policies, endorsements, certificates, and/or binders shall be subject to approval by the City as to form and content. A lapse in any required insurance coverage during this Agreement shall be a breach of this Agreement.

A. MINIMUM SCOPE AND LIMIT OF INSURANCE

1. ***Commercial General Liability (CGL)***: Insurance Services Office Form CG 00 01 covering CGL on an "occurrence" basis, including products and completed operations, property damage, bodily injury and personal & advertising injury with limits no less than **$2,000,000** per occurrence, except in the case where fireworks or pyrotechnics are used, in which case said limits will be no less than $5,000,000 per occurrence. If a general aggregate limit applies, either the general aggregate limit shall apply separately to this project/location (ISO CG 25 03 or 25 04) or the general aggregate limit shall be twice the required occurrence limit.

2. ***Automobile Liability***: Insurance Services Office Form Number CA 00 01 covering any auto (Code 1), or if Contractor has no owned autos, covering hired (Code 8) and non-owned autos (Code 9), with limit no less than **$1,000,000** per accident for bodily injury and property damage.

3. ***Workers' Compensation*** as required by the State of California, with Statutory Limits and Employer's Liability Insurance with limit of no less than **$1,000,000** per accident for bodily injury or disease. If Contractor has no employees, Contractor must notify City if an employee is hired, verify proof of coverage for any subcontractors, and agrees to hold City harmless and defend City from claims arising from failure to provide workers' compensation benefits.

B. OTHER INSURANCE PROVISIONS

The insurance policies are to contain, or be endorsed to contain, the following provisions:

1. ***Additional Insured Status***. The City, its officers, officials, employees, and volunteers are to be covered as additional insureds on the CGL policy with respect to liability

arising out of work or operations performed by or on behalf of the Contractor including materials, parts, or equipment furnished in connection with such work or operations. General liability coverage can be provided in the form of an endorsement to the Contractor's insurance (at least as broad as ISO Form CG 20 10 11 85 or both CG 20 10, CG 20 26, CG 20 33, or CG 20 38; and CG 20 37 forms if later revisions used).

2. ***Primary Coverage***. For any claims related to this contract, the Contractor's insurance coverage shall be primary insurance coverage at least as broad as ISO CG 20 01 04 13 as respects the City, its officers, officials, employees, or volunteers. Any insurance or self-insurance maintained by the City, its officers, officials, employees or volunteers shall be excess of the Contractor's insurance and shall not contribute with it.

3. ***Notice of Cancellation***. Each insurance policy required above shall provide that coverage shall not be canceled, except with 30 days' notice to the City, with ten days' for notice of cancellation due to non-payment.

4. ***Waiver of Subrogation***. Contractor hereby grants to City a waiver of any right to subrogation which any insurer of said Contractor may acquire against the City by virtue of the payment of any loss under such insurance. Contractor agrees to obtain any endorsement that may be necessary to affect this waiver of subrogation, but this provision applies regardless of whether or not the City has received a waiver of subrogation endorsement from the insurer.

5. ***Self-Insured Retentions***. Self-insured retentions must be declared to and approved by the City. The City may require the Contractor to purchase coverage with a lower retention or provide proof of ability to pay losses and related investigations, claim administration, and defense expenses within the retention. The policy language shall provide, or be endorsed to provide, that the self-insured retention may be satisfied by either the named insured or City.

6. ***Acceptability of Insurers***. Insurance is to be placed with insurers authorized to conduct business in the state with a current A.M. Best's rating of no less than A:VII, unless otherwise acceptable to the City.

7. ***Claims Made Policies***. If any of the required policies for professional liability insurance provide claims-made coverage:

i. The Retroactive Date must be shown and must be before the date of the contract or the beginning of contract work.

ii. Insurance must be maintained and evidence of insurance must be provided for at least five (5) years after completion of the contract of work.

iii. If coverage is canceled or non-renewed, and not replaced with another claims-made policy form with a Retroactive Date prior to the contract effective date, the Contractor must purchase "extended reporting" coverage for a minimum of five (5) years after completion of contract work.

8. ***Verification of Coverage***. Contractor shall furnish the City with original Certificate of Insurance including all required amendatory endorsements (or copies of the applicable policy language effecting coverage required by this clause) and a copy of the

Declarations and Endorsement Page of the CGL policy listing all policy endorsements to the City before work begins. However, failure to obtain the required documents prior to the work beginning shall not waive the Contractor's obligation to provide them. The City reserves the right to require complete, certified copies of all required insurance policies, including endorsements required by these specifications, at any time.

9. ***Subcontractors***. Contractor shall require and verify that all subcontractors maintain insurance meeting all the requirements stated herein, and Contractor shall ensure that City is an additional insured on insurance required from subcontractors.

10. ***Special Risks or Circumstances***. City reserves the right to modify these requirements, including limits, based on the nature of the risk, prior experience, insurer, coverage, or other special circumstances.

19. GENERAL/MISCELLANEOUS PROVISIONS:

A. **Contract Documents**. This agreement and its exhibits shall be known as the "Contract Documents." Terms set forth in any Contract Document shall be deemed to be incorporated in all Contract Documents as if set forth in full therein. In the event of conflict between terms contained in these Contract Documents, the more specific term shall control. If any portion of the Contract Documents shall be in conflict with any other portion, provisions contained in the Contract shall govern over conflicting provisions contained in the exhibits to the Contract. In the event of any conflict between the terms or conditions of this written agreement and any terms or conditions of any document prepared or provided by Contractor and made a part of this agreement, including without limitation any document relating to the scope of services or payment therefor, the written terms of this document shall control over those terms or conditions.

B. **Non-Discrimination in Employment and Equal Employment Opportunity**. Contractor shall not engage in unlawful employment discrimination. Such unlawful employment discrimination includes, but is not limited to, employment discrimination based upon a person's race, color, ancestry, national origin, religious creed, sex (including pregnancy, childbirth breastfeeding or related medical condition), sexual orientation, gender, gender identity, gender expression and age (over 40), disability (mental and physical), medical condition, marital status, citizenship, and military and veteran status.

C. **Inspection of Records**. Contractor shall maintain and make available for inspection by the City and its auditors accurate records of all of its costs, disbursements and receipts with respect to any work under this Contract. Such inspections may be made during regular office hours at any time until six (6) months after the final payments under this Contract are made to the Contractor.

D. **Entire Agreement**. This Contract constitutes the entire agreement between the parties relative to the services specified herein and supersedes whatever oral or written understanding they may have had prior to the execution of this agreement. No alteration or modification of this agreement shall be valid or effective unless and until such modification is evidenced by a writing signed by both parties to this Contract, by persons authorized to act on behalf of the parties. There are no understandings, agreements, conditions, representations, warranties or promises, with respect to this Contract, except those contained in or referred to in the writing.

E. **Severability**. If any portion of this agreement or the application thereof to any person or circumstance shall be held invalid or unenforceable, the remainder of this agreement shall not be affected thereby and shall be enforced to the greatest extent permitted by law.

F. **Waiver**. Neither City's acceptance of, or payment for, any service performed by Contractor, nor any waiver by either party of any default, breach, or condition precedent, shall be construed as a waiver of any provision of this agreement, nor as a waiver of any other default, breach or condition precedent or any other right hereunder.

G. **Notice**. All notices that are required to be given by one party to the other under this Contract shall be in writing and shall be deemed to have been given if delivered personally or enclosed in a properly addressed envelope and deposited in a United States Post Office for delivery by registered or certified mail addressed to the parties at the following addresses:

City: City of Rocklin
Parks and Recreation Department
5460 5th Street
Rocklin, CA 95677

City of Rocklin
Office of the City Attorney
3970 Rocklin Road
Rocklin, CA 95677

Contractor: Push the Show, LLC
829 27th Avenue
Oakland, CA 94601

H. **Mediation**. In the event a dispute arises out of or relates to this Contract, or the breach thereof, and if the dispute cannot be settled through negotiation, the parties hereby agree first to attempt in good faith to settle the dispute by mediation before resorting to litigation or some other dispute resolution procedure. The parties shall select a mutually agreeable mediator and shall share the cost of the mediator equally.

I. **Enforcement of Agreement.** This Contract shall be interpreted, governed and enforced in accordance with the laws of the State of California. Venue of any action arising out of this Contract shall be brought and maintained in Placer County California, regardless of where else venue may lie. The parties consent to jurisdiction over their persons and over the subject matter of any such litigation in such court, and consent to service of process issued by such courts.

J. **Attorney's Fees**. In any action brought by either party to enforce the terms of this Contract, each party shall bear responsibility for its attorney's fees and all costs regardless of whether one party is determined to be the prevailing party.

K. **Power and Authority to Enter into Agreement**. All parties to this Agreement warrant and represent that they have the power and authority to enter into this Agreement in the names, titles, and capacities herein stated and on behalf of any entities, persons, or firms represented or purported to be represented by such entity(ies), person(s), or firm(s) and that all formal requirements necessary or required by any state and/or federal law in order to enter into

this Agreement have been fully complied with. Furthermore, by entering into this Agreement, Contractor hereby warrants that it shall not have breached the terms or conditions of any other contract or Agreement to which Contractor is obligated, which breach would have a material effect hereon.

L. **Counterparts**; **Electronic Signatures**. This Agreement may be executed in two or more counterparts, each of which when so executed shall be deemed to be an original and all of which when taken together shall constitute one and the same instrument. The words "execution," "signed," "signature," and words of like import in this Agreement or in any other certificate, agreement or document related to this Agreement, shall include digital electronic signatures (DocuSign). The use of digital electronic signatures and electronic records (including, without limitation, any contract or other record created, generated, sent, communicated, received, or stored by electronic means) shall be of the same legal effect, validity and enforceability as a manually executed signature or use of a paper-based record-keeping system to the fullest extent permitted by applicable law.

M. **Exhibits**. All exhibits referred to herein and attached hereto, are by this reference incorporated as if set forth fully herein.

CONTRACTOR

DocuSigned by:

By: Thomas Cussins
5E8DB5232E7F461...
Thomas Cussins, CEO of Ineffable Music Group, Inc., Managing Member of Push the Show, LLC

DocuSigned by:

By: Matt Bailey
0175D5D707B74C7...
Matthew Bailey, Secretary of Ineffable Music Group, Inc., Managing Member of Push the Show, LLC

CITY OF ROCKLIN

DocuSigned by:

By: Aly Zimmermann
F29E9749AAD9403...
Aly Zimmermann, City Manager

ATTEST:

DocuSigned by:

By: Avinta Madhukansh-Singh

88A95AD69CB047E...

Avinta Singh, City Clerk

APPROVED AS TO FORM:

DocuSigned by:

By: Daniel Cucchi

5553D9734517413...

Daniel Cucchi,
Acting Assistant City Attorney

EXHIBIT A

Scope of Work

The City of Rocklin ("City") owns real and personal property known as the Quarry Park Amphitheater, as shown in Exhibit D, incorporated herewith by reference (collectively referred to herein as the "Amphitheater"); and Push the Show, LLC ("Push the Show") principals have considerable expertise in the operation, management and production of entertainment events, concerts and concert venues; and Push the Show is interested in managing and operating the Amphitheater for City.

City and Push the Show desire to enter into an Agreement for the Production Management of the Amphitheater consistent with the following Scope of Work:

AMPHITHEATER AND USE OF QUARRY PARK

- Push the Show agrees to use the Amphitheater primarily for entertainment purposes, in accordance with the City's adopted Quarry Park Amphitheater Policies. The City may modify the Amphitheater Policies from time to time, solely at the City's discretion. During the term of this Agreement, the City will confer with Push the Show before making material changes to the City's Amphitheater Policies. In the event of a conflict between the terms of the City's Amphitheater Policies and this Agreement, the terms of this Agreement shall prevail.

- Push the Show's use of the Amphitheater shall not adversely affect the public's use and enjoyment of the remainder of Quarry Park, or the public's use and enjoyment of the Amphitheater when Push the Show is not managing or producing an Event at the Amphitheater. Push the Show shall return control of the Amphitheater to City within twelve (12) hours after the end of each Event, unless otherwise agreed upon by the parties.

- Push the Show's use of the Amphitheater shall comply with all City noise policies, as they may be amended from time-to-time.

- City and its representatives shall have the right to enter and inspect the Amphitheater at any time. City shall have the right, subject to the terms below, to use the Amphitheater at any time Push the Show is not using the Amphitheater for an Event.

- When either Push the Show or the City are not using the Amphitheater for an Event, the Amphitheater will be open and accessible to the public.

- All City owned parking areas outside of the Amphitheater boundary, as set forth in Exhibit D, attached hereto and incorporated herein, shall remain available for City operations at City's sole discretion. Any use of City owned parking areas outside of the Amphitheater boundary must be approved by City in advance of an Event.

- No parking is permitted at any time within the Fire Department boundary, as set forth in Exhibit D. Push the Show shall ensure that the Fire Department boundary is free from obstruction at all times during their use of the Amphitheater.

PUSH THE SHOW RIGHTS AND OBLIGATIONS

- Starting upon execution of this Agreement by both parties ("Commencement Date") and during the term of this Agreement, Push the Show shall manage and operate the Amphitheater, in accordance with the terms and requirements of this Agreement.

- Push the Show shall produce a minimum of eight (8) Concert Events at the Amphitheater each season for the remaining term of this Agreement.

- Push the Show has the exclusive right to book Events at the Amphitheater up to 365 days per year, except for those specific days withheld for use by City.

- Push the Show shall be responsible for the Production Management of each Event at the Amphitheater, which includes but is not limited to:
    - Artist Negotiations, Routing, and Booking
    - Sound, Lighting and Backline
    - Ticketing Software, Sales, and Management
    - Production and Stage Management
    - Marketing and Sponsorships
    - Alcoholic Beverage Sales, Hospitality and Artist Relations
    - Contracts, Payments, and Administration

- Push the Show shall be solely responsible for the production of all Events, excluding City-produced Events. Currently planned City-produced annual Events include the following:
    - Evenings at the Park (April-October)
    - Shakespeare in the Park (June)
    - Patriot Day (September)
    - Hot Chili Cool Cars (September)
    - Tree Lighting (December)
    - Employee Appreciation (TBD)

- Push the Show shall provide City an up-to-date Master Calendar of Events on the first working day of each month.

- Push the Show shall provide City with a master plan for each Event and submit to City for review and approval, at least ten (10) days prior to each Event.

- Push the Show shall be solely responsible for all ticket sales and management of ticketing software for all Events, excluding City-produced Events. Push the Show will provide City thirty (30) tickets to all ticketed Events, at no charge to City, at least seven (7) days prior to the Event. Any additional tickets must be approved by Push the Show.

- Excluding City-produced Events, should an Event be cancelled by an Artist or due to a Force Majeure event and not rescheduled to occur during the same Operating Season, Push the Show shall issue refunds or exchanges for tickets sold to the Event. The refund policy for each Event shall be clearly stated to purchasers at the time of purchase and shall be printed on tickets issued.

- Push the Show shall be responsible for Event Administration, Financial Management, Marketing, Sponsorships, Production and coordination with the City for all Amphitheater Events.

- Push the Show shall have an onsite ticketing manager, production manager, and artist relations/promoter onsite for each Event.

- Push the Show shall provide all necessary storage for all items related to a Concert Event that does not fit within current park facilities or current capacity.

CITY RIGHTS AND OBLIGATIONS

- City shall designate one or more City Staff members as Push the Show liaison for all communications and scheduling with all City Departments.

- City shall provide all local, day-of event staff for each Event at the Amphitheater, which includes but is not limited to:
    - Gate Staff
    - Janitorial Staff
    - Ushers
    - Setup & Breakdown Staff
    - Fencing
    - Parking Operations
    - Venue Management

- City shall be responsible for Amphitheater safety and security, including police department and EMS services.

- City shall be solely responsible for all parking operations at the Amphitheater, for all Events.

- City shall be solely responsible for janitorial, restroom facilities and fencing at Amphitheater for all Events, including any additional temporary fencing and restrooms that may be required.

- City shall be solely responsible for all food truck operations at the Amphitheater for all Events

- City shall have final approval of all artists prior to Push the Show entering into a contract with an artist for an Event at the Amphitheater. Push the Show shall submit a list of desired talent by January 15th of each Operating Season for City review and approval. Any additional talent not listed must be reviewed and approved by City. City will review and approve/deny within two (2) business days of Push the Show's submittal of the list to City.

- City shall retain responsibility and control over the Amphitheater for all days not reserved by Push the Show for an Event, provided, however, that City agrees to grant Push the Show access to the Amphitheater up to a maximum of two (2) days prior to each Event, which shall be determined between the parties prior to each Event. Push the Show shall indicate on the Master Calendar when access to the Amphitheater in advance of an Event is needed.

- City shall have the right to reserve the Amphitheater to host up to ten (10) Events each Operating Season.

- City shall submit a request to Push the Show for City's selected dates by the 30th day of January of the Operating Season. City will receive those requested days unless Push the Show has an existing conflict with an executed or pending contract with Artist or a third-party renter for an Event on the same date(s), in which case the Parties will meet and confer to identify a suitable alternative date(s) for the City-produced Event(s).

- City shall have the right throughout each Operating Season, to select additional dates for use by City up to 120 days in advance, when Push the Show has no Events scheduled on the Master Calendar for that date(s). Such additional City-produced Events shall be for free public Events or Events in which Push the Show has opted not to produce the Event.

- City will review and comment on any Push the Show proposed form agreements, procedures, and policies, within twenty-one (21) days from submittal to City.

EQUIPMENT

- City will provide Push the Show with the materials and equipment identified in Exhibit E, incorporated herewith by reference, for use in operating the Amphitheater, which shall remain the sole and exclusive property of City. This Equipment will be provided if available, upon timely request, which is at least fourteen (14) calendar days prior to the desired date for use.

- At the termination of this Agreement, Push the Show shall return the equipment identified in Exhibit E to City, in the same condition as when it was received by Push the Show, with the exception of ordinary wear and tear.

CONCESSIONS

- Push the Show shall be solely responsible for all alcoholic beverage operations and merchandising sales, for all Events, excluding City-produced Events.

- Push the Show may sell alcoholic beverages at all Events, excluding City-produced Events, with City approval, which approval shall not be unreasonably withheld. Proof of liquor liability insurance satisfactory to the City will be required.

- Alcohol sales and service shall be in compliance with all Laws.

- Alcohol sales shall be limited to beer and wine-based beverages and shall be sold at a minimum price per beverage of five dollars ($5.00) at each Event. The maximum size for each beverage shall be: Beer - sixteen (16) ounces; Wine - nine (9) ounces; and Wine or Beer-based Mixed Drink - twelve (12) ounces.

QUALITY OF OPERATIONS

- Push the Show shall perform all of the duties normally associated with the Production Management of an Amphitheater and shall operate the Amphitheater in the manner that is customary and usual to such an operation and consistent with generally accepted professional procedures and standards.

- Push the Show shall operate the Amphitheater in a safe and efficient manner. Push the Show shall maintain a written Emergency Action Plan and provide its employees with training designed to reduce the risk of injury to employees or guests. The training program shall, as applicable, involve City's emergency responders.

- Push the Show shall operate the Amphitheater in a manner that is in compliance with all applicable Laws, City policy, and the terms of this Agreement.

- Push the Show shall use its best efforts to ensure its employees, contractors and agents working at the Amphitheater wear appropriate apparel, are courteous, and exhibit good customer service.

- Push the Show will maintain trained and competent personnel for the management and operation of the Amphitheater, in accordance with any generally applicable industry standards for staffing. Push the Show shall have in its employ at all times a sufficient number of capable employees to enable it to properly, adequately, and safely manage and operate the Amphitheater.

- Push the Show shall monitor whether or not the management and operation of the Amphitheater is in compliance with all Push the Show obligations.

- In no event shall the scope or quality of the services provided by Push the Show be less than those generally performed by professional managers of similar properties in the industry.

- Push the Show shall make available to City the full benefit of the judgement, experience and advice of members of Push the Show regarding the management, operation, and production of Events.

- Push the Show will draft Standard Operating Procedures and an Emergency Action Plan for the safe operation of the Amphitheater. Push the Show shall provide copies of such Procedures and Plans, and all updates thereto, to City.

- Push the Show shall use its best efforts to operate the Amphitheater in a manner that is compatible with the interests of City, the surrounding community and the patrons of the Amphitheater, consistent with this Agreement.

- Push the Show shall be available for communication with City, including without limitation attending periodic meetings with City at times and locations designated by City.

- Push the Show shall keep City advised of items that affect the Amphitheater in any significant manner.

- Push the Show shall provide to City written documentation of all incidents involving personal injury, property damage, or criminal activity that take place at Events at the Amphitheater, within twenty-four (24) hours of their occurrence, with the exception of City-sponsored Events. Push the Show shall promptly report all criminal activity to the Rocklin Police Department.

MARKETING

- Push the Show shall be solely responsible for marketing all non-City-sponsored Events, as well as marketing the Amphitheater for use as an Event location.

- Push the Show shall market the Amphitheater under the name "Quarry Park Amphitheater." Push the Show may utilize branding and logo provided by City, or Push the Show may utilize other branding and logo, if that branding and logo are approved by the City. If Push the Show uses branding or logo for the Amphitheater in addition to that provided by the City, Push the Show shall transfer the additional branding/logo/copyright/trade or service marks and all rights thereto, to City upon termination of this Agreement.

- All customer lists and records generated by Push the Show pertaining to the management and operation of the Amphitheater under this Agreement, whether in existence at the commencement of Push the Show operation of the Amphitheater or compiled thereafter, shall be treated as the property of Push the Show. City and Push the Show shall each control their respective customer lists, records or similar information pertaining to the Amphitheater. The parties may mutually agree to distribute advertising for City and Push the Show Events to the other party's customer database.

- Push the Show's marketing of the Amphitheater shall be family-friendly.

- Push the Show shall be responsible for acquiring and managing all sponsorships. All sponsors are subject to the approval of City, which approval shall not be unreasonably withheld.

- All sponsorship signage must be approved by City. Temporary sponsor signage may be displayed during each event, however, any sponsor signage or advertising to be displayed outside of individual Events must be approved by City.

- Push the Show shall provide City with copies of all sponsorship agreements entered within thirty (30) days of execution.

- City will advertise Events through City's subscriber email system and social media accounts upon a timely request from Push the Show without charge, whenever feasible. An advertising request is timely if all final advertising copy to be distributed is provided to City in a form acceptable to City at least thirty (30) calendar days prior to Push the Show desired date for distribution. City reserves the right to deny any request.

- City agrees to market the Amphitheater based on Push the Show's marketing plan upon approval and available funding by City.
    - City will allocate twenty-five thousand dollars ($25,000) per year in paid Marketing initiatives and assistance to Amphitheater operations.

SUB-CONTRACTING

- Push the Show may subcontract with a third party to provide any of the operations services described in herein for an Event, with City approval. Push the Show shall provide a copy of the form agreement to City for its review and approval prior to entering into the first agreement with a subcontractor for an Event.

- Push the Show shall have the right to rent the Amphitheater to a third party for Events, with City approval. Push the Show shall provide a copy of the form rental agreement(s), procedures, policies and fees to City for its review and approval prior to the first rental of the Amphitheater for an Event.

- Push the Show shall have the right to enter into a partnership agreement with a third party to produce an Event, with City approval. Push the Show shall provide a copy of the partnership agreement to City for its review and approval prior to entering into an agreement with a partner for an Event. City is not responsible for honoring any such agreements entered into by Push the Show upon termination of this Agreement.
- Push the Show is not authorized to negotiate or enter into any agreements on City's behalf.

FINANCIAL REPORTING

- Push the Show will provide City with a copy of their Operating Budget by October 1 each year of the Term.

- In addition to the ticket sales reports provided to City, Push the Show shall keep an accurate record of attendance at Push the Show managed or produced Events. Such records shall be made available to City upon request.

- Following delivery of each Amphitheater Report, Push the Show shall consult with City to discuss the issues raised in the report or other topics of concern to City.

- Push the Show shall also provide any written reports, financial reports, and information which may be reasonably requested by City from time to time. Push the Show shall provide City with proof of reporting and payment to Broadcast Media Inc. ("BMI"), the American Society of Composers, Authors, and Publishers ("ASCAP"), and the Society of European Stage Authors and Composers ("SESAC") royalties to City within five (5) calendar days of the end of each Operating Season. (additional reporting agency language?)

DocuSign Envelope ID: C212EA6E-6386-4575-9527-FF79F50DF487

EXHIBIT B

Schedule of Performance

Push the Show shall produce a minimum of eight (8) Concert Events at the Amphitheater each season for the remaining term of this Agreement. Push the Show shall perform all duties and obligations listed and contained in the Agreement.

EXHIBIT C

Schedule of Fees

PUSH THE SHOW OPERATIONS COSTS AND REVENUES

- Except as otherwise expressly agreed to in the Agreement, Push the Show shall be responsible for all Event production costs, which includes all costs associated with Event production not otherwise addressed in the Agreement, including but not limited to:
    - Artist Contracts
    - Sound & Lights
    - Hospitality
    - Ticketing
    - Production Management
    - Marketing & Sponsorship Deliverables
    - Artist Contracts

- Push the Show is responsible for, and will pay all fees associated with music licensing and other permits required for an Event, other than City-sponsored Events.

- Push the Show and its subcontractors are responsible for payment of sales tax, if any, associated with Events, other than City-sponsored Events. ‘

- Push the Show shall be responsible for acquiring and managing all sponsorships All sponsorship agreements shall terminate upon termination of this Agreement. Push the Show shall retain one hundred percent (100%) of sponsorship revenue.

- Push the Show shall be responsible for all ticketing software, fees, and management. Push the Show shall retain one hundred percent (100%) of all ticketing revenue.

- Push the Show shall be responsible for all alcohol sales and shall retain one hundred percent (100%) of alcohol related revenue.

- Push the Show shall be responsible for all merchandising vendors (e.g. artist merchandise, clothing, business booths) and shall retain one hundred percent (100%) of all merchandising vendor revenue.

- All non-ticketed Events will be mutually agreed upon by City and Push the Show.

CITY OPERATIONS COSTS AND REVENUES

- City shall be responsible for all City employee staffing costs.

- City shall be responsible for all City contracted services and associated costs.

- City shall be responsible for all utility costs related to Amphitheater operations.

- City shall be responsible for all costs for any services provided by the Rocklin Police Department for all Events.

- City is responsible for all costs associated with Amphitheater fencing and security.

- City shall be responsible for twenty-five thousand dollars ($25,000) per year in paid Marketing initiatives and assistance to Amphitheater operations.

- Push the Show shall pay to City four dollars ($4.00) per ticket sold or otherwise provided to a third party at full cost or reduced cost, for each Ticketed Concert Event. This fee shall not be published in connection with the sale of tickets (i.e., on Push the Show website, at the time of ticket purchase, or on the tickets issued to purchasers). Push the Show shall not be required to pay the above four dollar ($4.00) fee to City for any tickets that are provided to City free of charge. Push the Show shall provide City with a report of tickets issued through a third-party (i.e., Ticketmaster or Eventbrite) within seven (7) calendar days following each Concert Event.

- Push the Show shall pay to City an additional one thousand dollars ($1,000) for any sold-out Concert or Event produced by Push the Show.

- City shall be responsible for all operating costs for parking operations and shall retain one hundred percent (100%) of revenue from parking operations. Each Event parking fee per vehicle shall be set at City's sole discretion. City will discuss any parking fee increases with Push the Show each year prior to implementation.

- City shall be responsible for booking all food trucks and food truck operations and shall retain one hundred percent (100%) of revenue from such operations.

PAYMENT TERMS

- City shall invoice Push the Show for the fees described herein within thirty (30) calendar days following each Event. Push the Show shall remit payment to City net thirty (30) days from receipt of invoice.

DocuSign Envelope ID: C212EA6E-6386-4575-9527-FF79F50DF487

EXHIBIT D

DocuSign Envelope ID: C212EA6E-6386-4575-9527-FF79F50DF487

EXHIBIT E

Equipment List

1. Portable Tables
2. Chairs for Venue Seating
3. Folding Chairs
4. EZ-Ups
5. Ice Chests
6. Portable Communication Radios
7. Gator
8. Stage Lift Equipment
9. Conex Storage Container (located behind stage)
10. Bike Rail & Barricades
11. A-Frame & Sandwich Board Signs
12. Stanchions

City Council Staff Report

Subject: Landscape Maintenance Agreement

Date: February 25, 2025

Submitted By: Rick Lawrence, Public Works Manager
Justin Nartker, Public Works Director

Department: Public Works

Recommendation:
Adopt a Resolution of the City Council of the City of Rocklin Approving a Landscape Maintenance Agreement and Authorizing the City Manager to Execute the Landscape Maintenance Agreement with Chapa-De Indian Health Program, Inc.

Background:
On August 6, 2024, the Rocklin Planning Commission adopted Resolution No. PC-2024-25 (Attachment 2), approving the Design Review of the Chapa-De Indian Health South Placer Facility. As part of the approval, the Developer (Chapa-De) has agreed to maintain the City-owned landscape area within the City-owned right-of-way along the Chapa-De perimeter, located on Wildcat Boulevard and West Stanford Ranch Road. Chapa-De will maintain the landscape and irrigation system on the City-owned right-of-way located on Wildcat Boulevard and West Stanford Ranch Road, as identified on the Project Location Map (Attachment 3).

A Landscape Maintenance Agreement is required to formalize this arrangement. This agreement will ensure a uniform landscape treatment and simplify maintenance responsibilities. This agreement provides a benefit to both Chapa-De and the City by eliminating the need to install duplicative irrigation systems for both the project frontage and the City's right-of-way. It also provides the Developer control of the aesthetics of their frontage and long-term maintenance savings to the City. The agreement requires the Developer to maintain proper insurance coverage, naming the City as an additional insured. The agreement also includes the City's standard hold harmless provision.

Staff has determined that this agreement is beneficial to both Chapa-De and the City and recommends approval.

Fiscal Impact:
There is no direct fiscal impact to the General Fund from the staff recommendation.

ATTACHMENTS:

1. Resolution and Agreement
2. Planning Commission Resolution PC-2024-25
3. Project Location Map

RESOLUTION NO. 2025-

RESOLUTION OF THE CITY COUNCIL OF THE CITY OF ROCKLIN APPROVING A LANDSCAPE MAINTENANCE AGREEMENT AND AUTHORIZING THE CITY MANAGER TO EXECUTE THE LANDSCAPE MAINTEEANCNE AGREEMENT WITH CHAPA-DE INDIAN HEALTH PROGRAM, INC.

WHEREAS, on August 6, 2024, the City of Rocklin Planning Commission approved the design review for Chapa-De Indian Health Program, Inc. Resolution PC2024-25 (Chapa-De Indian Health South Placer Facility / DR2023-0014); and

WHEREAS, Condition No. 7 in the Design Review requires the Developer and the City enter into a Landscape Maintenance Agreement whereby the property owner shall maintain the irrigation system and all plant materials.

The City Council of the City of Rocklin does resolve as follows:

Section 1. The City Council of the City of Rocklin approves and directs the City Manager to execute an agreement for landscaping maintenance between the City of Rocklin and Chapa-De Indian Health Program, Inc., in the form attached hereto as Exhibit A and by this reference incorporated herein.

Section 2. The City Clerk is authorized and directed to record the Landscaping Maintenance Agreement in the Office of the Placer County Recorder when fully executed and notarized.

PASSED AND ADOPTED this 25th day of February, 2025, by the following roll call vote:

AYES: Councilmembers:
NOES: Councilmembers:
ABSENT: Councilmembers:
ABSTAIN: Councilmembers:

_____
Jill Gayaldo, Mayor

ATTEST:

_____
Avinta SIngh, City Clerk

Recording Requested by
and Return to:

No Fee Per Gov't Code § 27383

City Clerk
City of Rocklin
3970 Rocklin Road
Rocklin, CA 95677

LANDSCAPING MAINTENANCE AGREEMENT
(Chapa-De Indian Health Program, Inc.)

This Agreement is entered into as of February 25, 2025, by and between the City of Rocklin, a municipal corporation ("City") and Chapa-De Indian Health Program, Inc. ("Developer").

RECITALS

1. Developer has received approval for and is pursuing construction of the project known as Chapa-De Indian Health South Placer Facility ("Project") approved by Rocklin Planning Commission Resolution No. PC 2024-25.

2. A condition of approval of the Project requires Developer to landscape and maintain the perimeter of the site, along Wildcat Boulevard and West Stanford Ranch Road. The landscaped areas of the Project and the adjacent right-of-way are depicted on Exhibit A, attached hereto and by this reference is incorporated herein, ("Landscaped Area"). The portion of the Landscaped Area within the City right-of-way would normally be maintained by the City out of revenues generated by CFD 5 (the "District") of which the Project is a part.

3. To insure a uniform landscaping treatment and simplify maintenance responsibilities, City and Developer enter into this Agreement to allow Developer to landscape the right-of-way portions of the Landscaped Area along with the Project landscaping and assume maintenance responsibility for the entire Landscaped Area.

4. Developer shall prepare and submit to the City's Director of Community Development and the City's Public Works Director final landscape and irrigation plans for all of the Landscaped Area shown on Exhibit A and in compliance with all conditions of Project approval.

5. Developer shall obtain an encroachment permit for all improvements within the public right-of-way. Developer shall post a performance bond and labor and materials payment bond (or other equivalent financial security) in the amount of 100% of the cost of the improvements to be constructed in the public right-of-way as improvement security to ensure the faithful performance of all duties and obligations required of Developer in the construction of the improvements. Such improvement security shall be in a form acceptable to the City Attorney. Such security shall be either a corporate surety bond, a letter of credit, or other instrument of credit issued by a banking institution subject to regulation by the State or Federal government and pledging that the funds necessary to carry out this Agreement are on deposit and guaranteed for payment, or a cash deposit made either directly with the City or deposited with a recognized escrow agent for the benefit of the City.

6. Developer shall supply City with a complete set of as-built plans of the landscaping and irrigation system within five (5) days of final inspection and approval.

7. Developer shall at all times maintain the Landscaped Area in a professional manner commensurate with the standard of maintenance provided by City in its landscaped rights-of-way in the vicinity of the Project site.

8. Insurance.

A. Developer shall procure and maintain for the duration of this Agreement insurance against claims for injuries to persons or damage to property which may arise from or in connection with the performance of work under this Agreement and the results of that work by Developer, its agents, representatives, employees, or subcontractors. All coverage available to the Developer as named insured shall be made available to the City, its officers, employees and volunteers as additional insured. Developer shall provide to City the full policy limits of Developer's insurance, with coverage at least as broad as, and limits no less than, the following:

1. General Liability. Developer shall maintain in full force and effect a policy of commercial general liability insurance (ISO occurrence form CG0001) with limits no less than the following: two million dollars ($2,000,000) per occurrence for bodily injury, personal injury, and property damage. If a general aggregate limit is used, either the general aggregate limit shall apply separately to this agreement, or the general aggregate limit shall be twice the required occurrence limit.

2. Worker's Compensation and Employer's Liability Insurance. Developer shall fully comply with the law of California concerning worker's compensation. Said compliance shall include, but not be limited to, maintaining in full force and effect one or more policies of insurance insuring against any liability Developer may have for worker's compensation. Developer shall also maintain in full

force and effect a policy of employer's liability insurance with limits no less than the following: one million dollars ($1,000,000) each accident; one million dollars ($1,000,000) policy limit bodily injury by disease; one million dollars ($1,000,000) each employee bodily injury by disease.

3. Automobile. Developer shall maintain in full force and effect a policy of commercial automobile liability insurance (ISO Form CA0001 Code 1 (any auto) or Code 8, 9 if no automobiles owned), with limits no less than the following: one million dollars ($1,000,000) per accident for bodily injury and property damage.

B. The general liability and automobile policies are to contain, or be endorsed to contain, the following provisions:

1. The City, its officers, employees and volunteers shall be added as insureds with respect to liability arising out of automobiles owned, leased, hired or borrowed by or on behalf of Developer, and with respect to liability arising out of work or operations performed by or on behalf of the Developer including materials, parts or equipment furnished in connection with such work or operations. Coverage shall not extend to any indemnity coverage for the active negligence of the additional insured in any case where an agreement to indemnify the additional insured would be invalid under subdivision (b) of section 2782 of the Civil Code.

2. For any claims related to work or operations performed by or on behalf of Developer, the Developer's insurance coverage shall be primary insurance as respects the City, its officers, employees, and volunteers. Any insurance or self-insurance maintained by the City, its officers, employees, or volunteers shall be excess of the Developer's insurance and shall not contribute with it.

3. Coverage shall not be cancelled by the Insurer except after thirty (30) days prior written notice has been given to the City.

C. The insurance company or companies providing Developer the coverages required by this Agreement shall be admitted in the State of California and have a current A.M. Best's rating of no less than A:VIII or equivalent acceptable to City.

D. Any deductibles or self-insured retentions must be declared to and approved by the City. At the option of City, either: the insurer shall reduce or eliminate such deductibles or self-insured retentions as respects the City, its officers, employees and volunteers; or the Developer shall procure a bond guaranteeing payment of losses and related investigations, claim administration and defense expenses.

E. The insurance shall be maintained from the time the work first commences until completion of the work under this Agreement and shall be on an occurrence policy form.

F. If Developer, for any reason, fails to maintain insurance coverage which is required under this Agreement, the failure shall be deemed a material breach of contract. City, at its sole option, may terminate this Agreement and obtain damages from Developer resulting from the breach.

G. Developer shall include all subcontractors as insureds under its policies or shall furnish separate certificates and endorsements for each subcontractor. All coverages for subcontractors shall be subject to all of the requirements stated herein.

H. Developer shall furnish City with original certificates and amendatory endorsements effecting coverage required by this Agreement. The certificates and endorsements should be on forms provided by the City, or on other than the City's forms, provided those endorsements or certifications conform to the requirements. All certificates and endorsements are to be received and approved by the City before work commences. The City reserves the right to require complete, certified copies of all required insurance policies, including endorsements effecting the coverage required by this Agreement at any time.

Developer shall replace certificates of insurance for policies expiring prior to completion of the work under the Agreement, and shall continue to furnish certificates for five years beyond the Agreement terminate date, when the Developer has a claims made form of insurance.

I. The worker's compensation and employee's liability insurance are to contain, or be endorsed to contain, the following provision: the State Compensation Insurance Fund waives any right of subrogation against the City, its officers, employees, and volunteers, which might arise by reason of any payment by the State Compensation Insurance Fund in connection with work performed by Developer under this Agreement.

9. Developer shall defend, indemnify and hold harmless City, its officers, officials, employees and volunteers from and against all claims, damages, losses, and expenses, including litigation costs and attorneys fees, arising out of Developer's performance or non-performance of its duties and obligations under this Agreement, caused in whole or in part by any negligent act or omission of Developers, any subcontractor, anyone directly or indirectly employed by any of them, or anyone for whose acts any of them may be liable, except where caused by the active negligence, sole negligence, or willful misconduct of City.

10. Developer agrees to remedy any defects in the landscaping and irrigation system within the Landscaped Area arising from faulty or defective design or construction occurring at any time during the term of this Agreement.

11. Attorney Fees; Litigation Costs.

If the services of any attorney are required by any party to secure the performance of this Agreement or otherwise upon the breach or default of another party, or if any judicial remedy or arbitration is necessary to enforce or interpret any provisions of this Agreement or the rights and duties of any person in relation to this Agreement, the prevailing party shall be entitled to reasonable attorney's fees, costs and other expenses in addition to any other relief to which such party may be entitled. Prevailing party includes (a) a party who dismisses an action in exchange for sums allegedly due; (b) the party that receives performance from the other party of an alleged breach of covenant or a desired remedy, if it is substantially equal to the relief sought in an action; or (c) the party determined to be prevailing by a court of law.

Whenever provision is made in this Agreement for the payment of attorney's fees, such fees shall be payable whether the legal services are rendered by a salaried employee for the party or by independent counsel and shall include such fees as are incurred in connection with any pretrial proceeding, trial or appeal of the action.

Any award of damages following judicial remedy or arbitration as a result of the breach of this Agreement or any of its provisions shall include an award of prejudgment interest from the date of the breach at the maximum amount of interest allowed by law.

12. This Agreement may be terminated by either party upon thirty (30) days written notice to the other. Upon notice of termination being given, and within that thirty (30) day period, Developer shall complete the following requirements:

A. Developer, at its sole cost, shall provide for the continued irrigation of the public right-of-way portion of the Landscaped Area, separate from the privately owned portion of the Landscaped Area.

B. Developer shall modify or replace the then existing irrigation system, to the satisfaction of City, and install, or pay the City the cost to have installed, a City water meter located within the public right-of-way. If the Developer fails to perform the work necessary to revise the irrigation system and install a City water meter, the City may at its option, perform or cause to be performed said work on behalf of Developer and assess a lien against Developer's property for the cost of the work.

13. The obligations set forth in this agreement are covenants that run with the land and are appurtenant to and shall burden Developer's property (and any portion into which such property may hereafter be divided), and are for the benefit of the adjacent City owned right-of-way.

14. This Declaration shall inure to the benefit of and be binding upon Developer, and their respective heirs, personal representatives, successors and assigns, and upon any person acquiring Developer's property, or any portion thereof, or any interest therein, whether by operation of law, foreclosure, trustee's sale, deed in lieu of foreclosure, or otherwise.

15. Notices shall be deemed given when mailed first class, postage prepaid, or personally delivered to the principal office of the other party at the following address:

City: City of Rocklin
c/o City Manager
3970 Rocklin Road
Rocklin, California 95677

Developer: Chapa-De Indian Health Program, Inc
2495 Bell Road
Auburn, CA 95630

Notices may be sent to such other persons and addresses as either party may designate from time-to-time in writing.

16. This Agreement shall be recorded in the Office of the Placer County Recorder.

The parties have executed this Agreement on the date first above written.

CITY OF ROCKLIN

By:_____
Aly Zimmermann, City Manager

DEVELOPER:

Signature:_____

Print Name:_____

Its:_____

APPROVED AS TO FORM

_____

Matthew McOmber, City Attorney

ATTEST

_____

Avinta Singh, City Clerk

ACKNOWLEDGEMENT

A notary public or other officer completing this certificate verifies only the identity of the individual who signed the document to which this certificate is attached, and not the truthfulness, accuracy, or validity of that document.

State of California
County of _____

On _____ before me, _____, Notary Public, personally appeared _____, who proved to me on the basis of satisfactory evidence to be the person(s) whose name(s) is/are subscribed to the within instrument and acknowledged to me that he/she/they executed the same in his/her/their authorized capacity(ies), and that by his/her/their signature(s) on the instrument the person(s), or the entity upon behalf of which the person(s) acted, executed the instrument.

I certify under PENALTY OF PERJURY under the laws of the State of California that the foregoing paragraph is true and correct.

WITNESS my hand and official seal.

Signature _____. (Seal)

ACKNOWLEDGEMENT

A notary public or other officer completing this certificate verifies only the identity of the individual who signed the document to which this certificate is attached, and not the truthfulness, accuracy, or validity of that document.

State of California
County of _____

On _____ before me, _____, Notary Public, personally appeared _____, who proved to me on the basis of satisfactory evidence to be the person(s) whose name(s) is/are subscribed to the within instrument and acknowledged to me that he/she/they executed the same in his/her/their authorized capacity(ies), and that by his/her/their signature(s) on the instrument the person(s), or the entity upon behalf of which the person(s) acted, executed the instrument.

I certify under PENALTY OF PERJURY under the laws of the State of California that the foregoing paragraph is true and correct.

WITNESS my hand and official seal.

Signature _____. (Seal)
w

Exhibit A

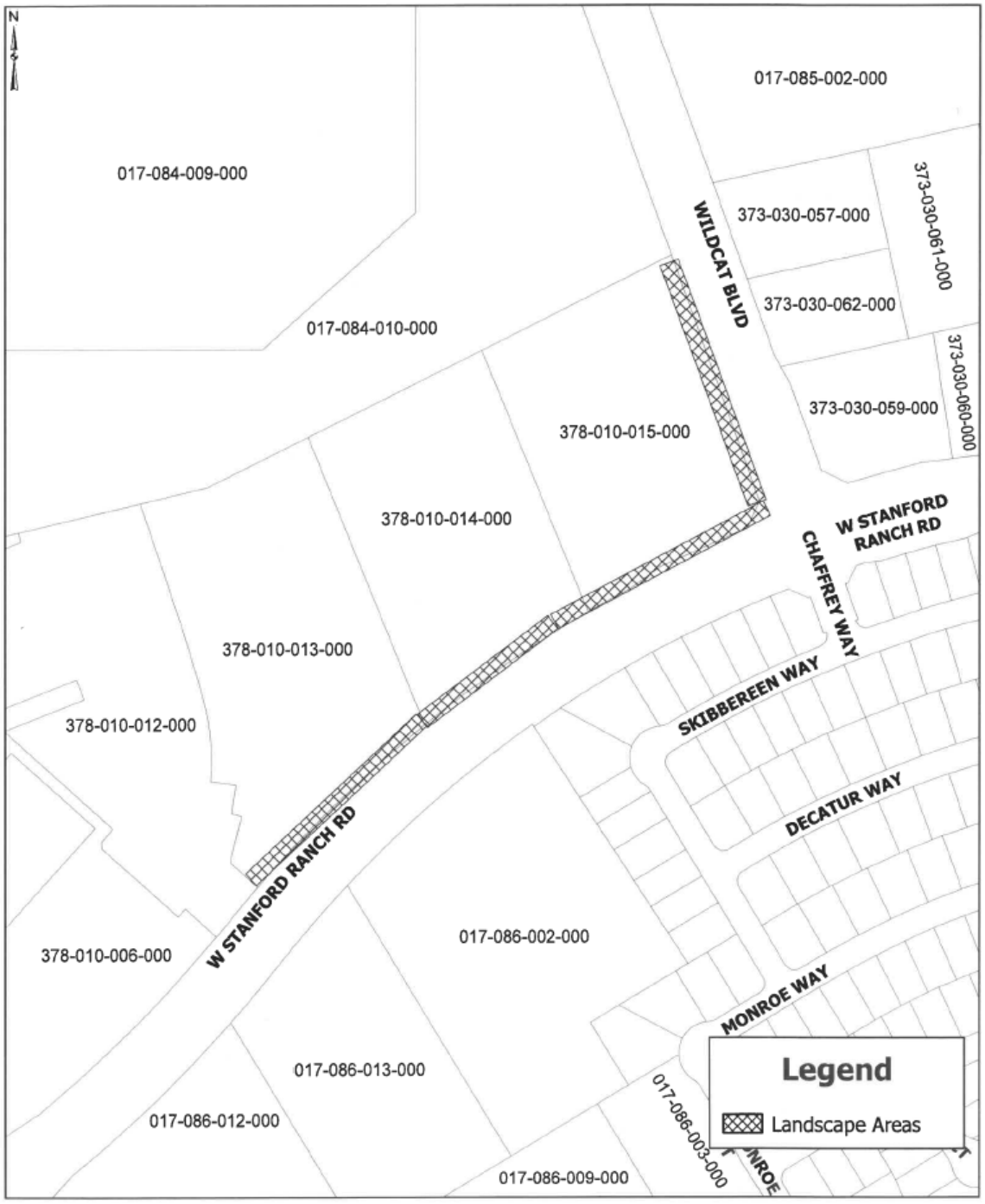
N
017-085-002-000
017-084-009-000
373-030-057-000
373-030-061-000
WILDCAT BLVD
373-030-062-000
017-084-010-000
373-030-060-000
373-030-059-000
378-010-015-000
378-010-014-000
W STANFORD RANCH RD
CHAFFREY WAY
378-010-013-000
SKIBBEREEN WAY
378-010-012-000
DECATUR WAY
W STANFORD RANCH RD
017-086-002-000
378-010-006-000
MONROE WAY
017-086-013-000
Legend
Landscape Areas
017-086-012-000
017-086-003-000
017-086-009-000

RESOLUTION PC-2024-25

RESOLUTION OF THE PLANNING COMMISSION OF THE CITY OF ROCKLIN RECOMMENDING APPROVAL OF A DESIGN REVIEW

(Chapa-De Indian Health South Placer Facility / DR2023-0014)

The Planning Commission of the City of Rocklin does resolve as follows:

Section 1. The Planning Commission of the City of Rocklin finds and determines that:

A. Design Review (DR2023-0014) approves the site design, landscaping, architectural designs, colors and materials for the Chapa-De project; an approximately 97,000-square-foot health center built out over two or more phases to provide medical, dental, optometry services, related administrative functions, and pharmaceutical services on undeveloped land in the northwestern area of the City near the Whitney Ranch neighborhood. The Assessor's Parcel Numbers (APN) are 378-010-013, 378-010-014, 378-010-015.

B. A Mitigated Negative Declaration and a Mitigation Monitoring Program for this project has been recommended for approval via Planning Resolution No. PC-2024-24.

C. The design of the site is compatible with the adjacent area, surrounding development, natural features, constraints, and traffic flow. The architectural design, colors and materials, and landscaping of the proposed commercial facility is consistent with the adjacent development. The architectural design of the site will have no impact to natural features within the area or traffic flow, beyond that which was identified in the Mitigated Negative Declaration.

D. The height, bulk, area, color scheme, and materials of the buildings and structures are compatible with the surrounding development. The average height of the Chapa-De buildings, as defined by the California Building Code, is approximately 35.5 feet, which aligns with the site's Planned Development Business Professional / Commercial / Light Industrial (PD-BP/C/LI) zoning's maximum height of 50-feet. The colors and materials have been chosen to harmonize with neighboring developments and adhere to the Citywide Design Guidelines.

E. The buildings and structures have been oriented with consideration given to minimizing energy consumption and maximizing use of natural lighting. The project design incorporates sustainable features consistent with the California Green Building Standards Code (CALGreen). The project provides electric vehicle charging spaces consistent with CALGreen. The position of the buildings in a north-south orientation maximizes passive solar access and natural lighting. The project shall be consistent with all California Building Code requirements. The project is consistent with the style, type,

and orientation of lighting with nearby developments, as well as with the requirements of the Citywide Design Guidelines.

F. Parking is consistent with requirements set forth in Section 17.66.040 of the Rocklin Municipal Code (RMC) with requires the project to provide for a total of 485 parking spaces, with 491 spaces being proposed. Ingress/egress patterns have been analyzed by the City's Engineering staff and have been determined to be consistent with City standards.

G. The landscaping design is compatible with surrounding developments and has been designed with provisions for minimizing water usage and maintenance needs. The landscaping is also consistent with the requirements of the Citywide Design Guidelines. The project will install landscape improvements throughout the project and along the Wildcat Boulevard and West Stanford Ranch Road frontages. The landscape concept is water-efficient, low maintenance, and will complement the buildings and make a positive contribution to the site's overall aesthetics. Low-profile shrubs, including screening shrubs, are planned along with shade and canopy trees. The planting design features various drought-tolerant, and fire-resistant species to create layers of color and texture to complement the architectural style and setting.

H. The design of the site and buildings or structures is consistent with the goals and policies of the General Plan, as well as the Business Professional / Commercial / Light Industrial (BP/COMM/LI) land use designation, the Planned Development Business Professional / Commercial / Light Industrial (PD-BP/C/LI) zoning within the Stanford Ranch General Development Plan, and all other City regulations, standards, and restrictions. The buildings are consistent with the Citywide Design Guidelines. The location of signs and graphics is consistent with requirements of the Rocklin Municipal Code and would not obstruct visibility.

Section 2. The Design Review for the Chapa-De project (DR2023-0014) as depicted in Exhibit A attached hereto and by this reference incorporated herein, is hereby recommended for approval subject to the conditions listed below. The approved Exhibit A shall govern the design and construction of the project. Any condition directly addressing an element incorporated into Exhibit A shall be controlling and shall modify Exhibit A. All other plans, specifications, details, and information contained within Exhibit A shall be specifically applicable to the project and shall be construed as if directly stated within the conditions for approval. Unless otherwise expressly stated, the applicant / developer shall be solely responsible for satisfying each condition prior to a final Building Permit Inspection or Issuance of a Certificate of Occupancy as applicable. The agency and / or City department(s) responsible for ensuring implementation of each condition is indicated in parenthesis with each condition.

B. Conditions

1. Utilities

a. All utilities, including but not limited to Internet, water, sewer, telephone, gas, electricity, and conduit for cable television shall be provided to the project in compliance with all-applicable standards and requirements of the applicable provider. (APPLICABLE UTILITY)

b. Solid Waste Disposal – The applicant shall install masonry trash enclosures with solid metal gates to the satisfaction of the Community Development Director. The location and design of trash enclosures shall provide for a minimum clear width and gate opening of 11 feet, a minimum interior depth of 14 feet (to accommodate two trash bins), and gates designed to clear adjacent curbing to the satisfaction of Recology Auburn Placer. (RECOLOGY AUBURN PLACER, ENGINEERING, BUILDING, PLANNING)

c. Prior to issuance of improvement plans, the project shall obtain necessary easements, on- and off-site, as required to accommodate water services, to the satisfaction of Placer County Water Agency ("PCWA"). (PCWA)

d. Prior to issuance of improvement plans, the project shall obtain necessary easements, on- and off-site, as required to accommodate sewer services, to the satisfaction of South Placer Municipal Utility District ("SPMUD"). (SPMUD)

e. Prior to issuance of the first Building Permit, the project shall be included in the appropriate City financing districts, as needed, to most efficiently provide for public maintenance of public landscaping, and improvements such as sound walls, and provision of new or enhanced services such as street lighting to the satisfaction of the City Finance Officer (FINANCE, ENGINEERING, PUBLIC SERVICES)

It is anticipated that the following will be necessary:

Annexation into: CFD No. 1 and/or CFD No. 5

2. Schools

At the time of issuance of a Building Permit, the developer shall pay to the Rocklin Unified School District ("RUSD") all fees required under Education Code Section 17620 and Government Code Section 65995. (RUSD, BUILDING)

3. Fire

1. The project shall comply with Title 24 of the California Code of Regulations, the Rocklin Municipal Code, California-adopted national standards, and Rocklin Fire Department guidelines.

2. A looped fire service main, with two separate points of connection to the public water system, is required for the project. Separate shop drawings for the private fire service water main shall be submitted to the Rocklin Fire Department for review and approval prior to installation.

3. An aerial fire apparatus road is required for this building to comply with current California Fire Code requirements. Due to topographic challenges presented by the site, additional measures to access the building roof are required by the Rocklin Fire Department. Fixed roof ladders shall be provided, to the satisfaction of the Fire Chief, in approved locations on the roof. The fixed roof ladders shall be shown as part of the architectural plan submittal and shall be approved prior to installation.

4. An Emergency Responder Radio Coverage System (ERRCS) is required for the Phase 1 building under the Rocklin Fire Department guideline as the total building area exceeds 30,000 SF. If an approved ERRCS contractor can provide test data which determines that an ERRCS installation is not required, then the requirement may be waived by the Fire Chief. However, the project is required to install the conduit necessary to support an ERRCS installation, should one be required once testing can be completed. The conduit must be shown on the architectural plans, reviewed and approved, and inspected during construction.

   Testing of the communication coverage within the building is required to be conducted by an approved third party contractor, as soon as the building envelope is completed and walls are in place.

   Should testing determine that a full ERRCS installation is required, a separate permit for the ERRC system is required to be reviewed and approved prior to installation.

4. Improvements / Improvement Plans

   Prior to any grading, site improvements, or other construction activities associated with this project improvement plans shall be prepared consistent with the exhibits and conditions incorporated as a part of this entitlement, and in compliance with all applicable city standards, for the review and approval of the City Engineer, Public Works Director, and/or the Community Development Director.

   Improvement plans shall be valid for a period of two years from date of approval by the City Engineer. If substantial work has not been commenced within that time, or if the work is not diligently pursued to completion thereafter, the City Engineer

may require the improvement plans to be resubmitted and/or modified to reflect changes in the standard specifications or other circumstances.

The project improvement plans shall include the following:
(ENGINEERING, PUBLIC WORKS, PLANNING)

a. The complete text of the project's Design Review conditions of approval.

b. A detailed grading and drainage plan prepared by a registered civil engineer, in substantial compliance with the approved project exhibit(s) and in accord with the City of Rocklin Post-Construction Manual. The grading and drainage plan shall include the following:

   i. All storm drainage run-off from site shall be collected into a City standard sand and oil trap manhole, approved vegetated swale (or an equal as approved by the City Engineer) prior to discharge of storm run-off offsite. Applicant shall design storm drain facilities to the satisfaction of the City Engineer.

   ii. Prior to issuance of improvement plans, to ensure compliance with the National Pollutant Discharge Elimination System MS4's General Permit and the regulations and orders of the State Water Resources Control Board, the applicant shall prepare and implement a Stormwater Control Plan for the on-site treatment systems and hydromodification controls (if any, or acceptable alternatives to the satisfaction of the City Engineer and Environmental Services Manager). All on-site specified treatments systems and hydromodification controls shall be privately owned and maintained.

   iii. All storm drainage inlets shall be stamped with City Engineer approved wording indicating that dumping of waste is prohibited and identifying that the inlets drain into the creek system.

   iv. Developer shall prepare a storm water pollutant protection plan ("SWPPP") for review and approval by the State Regional Water Quality Control Board as part of the project's drainage improvement plans.

   v. Construction related and permanent Best Management Practices ("BMPs") and Best Available Technologies ("BATs") shall be incorporated into the final project design and / or noted on the Improvement Plans as appropriate to reduce urban pollutants in runoff, consistent with goals and standards established under Federal and State non-point source discharge regulations (NPDES permit) and Basin Plan water quality objectives. Storm water runoff BMPs selected from the Storm Water Quality Task Force, the Bay

Area Storm Water Management Agencies Association Start at the Source – Design Guide Manual, or equally effective measures shall be identified prior to final design approval and shall be incorporated into project design and / or noted on the Improvement Plans as appropriate.

To maximize effectiveness, the selected BMPs shall be based on finalized site-specific hydrologic conditions, with consideration for the types and locations of development. Mechanisms to maintain the BMPs shall be identified in on improvement plans.

vi. Prior to the commencement of grading operations, and if the project site will not balance with respect to grading, the contractor shall identify the site where any excess earthen material shall be deposited. If the deposit site is within the City of Rocklin, the contractor shall submit a report issued by a technical engineer to verify that the exported materials are suitable for the intended fill and show proof of all approved grading plans. Haul routes to be used shall be specified. If the site requires importing of earthen material, then prior to the commencement of grading operations, the contractor shall identify the site where the imported earthen material is coming from and the contractor shall submit a report issued by a technical engineer to verify that the imported materials are suitable for the intended fill and show proof of all approved grading plans. Haul routes to be used shall be specified.

c. If at any time during the course of grading or construction activities evidence of the existence of old wells, septic systems or other similar features or any other evidence of soil and/or groundwater contamination with hazardous material is encountered, work shall be halted within 100 feet of the find and the City of Rocklin Engineer shall be notified. The City Engineer shall make a determination as to the nature of the feature(s) (and/or contamination, the appropriate size for a buffer around the feature beyond which work could continue on the balance of the site, and which outside agencies, if any, should be notified and involved in addressing and / or remediation of the feature or contamination. At the discretion of the City Engineer and at the applicant's expense, a qualified consultant(s) shall be retained to assess and characterize the feature or contamination and to determine appropriate remediation, if any. Remediation of the feature including obtaining any special permits and/or approvals as needed shall be completed and documented to the satisfaction of the City Engineer and any responsible agencies, such as but not limited to the Placer County Department of Environmental Health, and the Central Valley Regional Water Quality Control Board, prior to completion of grading / construction in the affected area.

d. All on-site standard improvements, including but not limited to:

i. All access and grading improvements as shown on Exhibit A. (PLANNING, ENGINEERING)

ii. Paving, curbs (including concrete curbs to contain all landscape areas adjacent to vehicle parking areas or travel lanes), gutters, sidewalks, drainage improvements, irrigation improvements (including main lines and distribution lines where located under paved areas), utility improvements, parking lot lights, fire hydrants, retaining walls, fences, pilasters, enhanced pavement treatments, trash enclosures, etc. (PLANNING, ENGINEERING)

iii. All necessary easements for drainage, access, utilities, etc. shall be shown and offered for dedication (or Irrevocable Offer of Dedication provided) with the improvement plans. (PLANNING, ENGINEERING)

iv. To the extent possible, underground facilities such as, but not limited to, electrical, gas, water, drainage, and irrigation lines shall be located outside of or to the edge of areas designated for landscaping so as to minimize impacts to the viability of these areas. (PLANNING, ENGINEERING)

e. Off-site improvements:

i. The existing curb, gutter, and sidewalk on Wildcat Boulevard and West Stanford Ranch Road shall be replaced and/or restored if damaged during construction, to the satisfaction of the Public Works Director. (PUBLIC WORKS, ENGINEERING)

ii. The existing ADA ramp at the northwest corner of Wildcat Boulevard and West Stanford Ranch Road shall be upgraded to current Caltrans standards.

iii. The completed traffic stripes and markings shall have clean, well-defined edges, without deformations and be free of tears or other disfigurements. Improperly placed, defective or disfigured traffic stripes and markings shall, at the Contractor's expense, be immediately removed from the pavement surface by methods approved by the City. Completed traffic stripes shall be uniform, straight on tangent alignment and on a true arc on curved alignment.

iv. Contractor shall be responsible for removing all Underground Service Alert (USA) markings from pavement surfaces, at the contractor's expense, with methods approved by the City of Rocklin, within existing or future City streets and City owned properties, prior to final inspection and acceptance of project improvements.

v. Improvement plans shall include landscape and irrigation plans for new landscaping and modifications to existing landscaping in the public rights-of-way (e.g., back of sidewalk/curb and/or median(s)) along Wildcat Boulevard and West Stanford Ranch. (PUBLIC WORKS, PLANNING, ENGINEERING)

A. The right-of-way landscape plans shall conform with the requirements of Condition 6, below, to the satisfaction of the Public Works Director.

B. Right-of-way landscaping shall conform to Exhibit A, to the satisfaction of the Public Works Director.

C. Granite or moss rock boulders along the planting strips, consistent with existing features, in the right-of-way.

D. In all landscape areas, add Walk-on Bark to existing and new landscape areas for a uniform look.

E. Prior to construction of the project driveways, City mainline, laterals and irrigation wires shall be placed in sleeves.

g. A detailed parking lot signage and striping plan designed per City standards , and Figure 5 of the Fehr and Peers Site Access & Circulation Study dated July 3, 2024, that indicates all parking spaces, aisles, entrances, and exits, including onsite signage and any required offsite signage in the public right-of-way. The locations shall be coordinated with and approved by Public Works to ensure the signs are located appropriately and that there is no damage to other infrastructure. (PLANNING, ENGINEERING)

h. Prior to any grading or construction activities including issuance of improvement plans, the developer shall submit a design-level soil investigation for the review and approval of the City Engineer and Chief Building Official that evaluates soil and rock conditions, particularly the potential for expansive soils. The professional engineer that prepared the soil investigation shall recommend appropriate roadway construction and foundation techniques and other best practices that are to be implemented by the project during construction. These techniques and practices shall address expansive soils or other geological concerns requiring remediation, including but not limited to: (BUILDING, ENGINEERING)

- Recommendations for building pad and footing construction;
- Use of soil stabilizers or other additives; and
- Recommendations for surface drainage.

i. Notes addressing conformance with the development standards and requirements of the City of Rocklin shall be included on the project improvement plans, including but not limited to the following: (PLANNING, ENGINEERING)

i. Prior to commencement of grading, the developer shall submit a Construction Emission / Dust Control Plan for approval by the City Engineer and the Placer County Air Pollution Control District ("APCD"). This plan must address how the project meets the minimum requirements of sections 300 and 400 of Rule 228-Fugitive Dust.

ii. Any diesel-powered equipment used during project construction shall be Air Resources Board ("ARB") certified.

iii. The prime contractor shall submit to the Placer County Air Pollution Control District a comprehensive inventory (e.g., make, model, year, emission rating) of all the heavy-duty off-road equipment (50 horsepower or greater) that will be used in aggregate of 40 or more hours for the construction project. If any new equipment is added after submission of the inventory, the prime contractor shall contact the District prior to the new equipment being utilized. At least three business days prior to the use of subject heavy-duty off-road equipment, the project representative shall provide the District with the anticipated construction timeline including start date, name, and phone number of the property owner, project manager, and on-site foreman.

iv. Construction equipment exhaust emissions shall not exceed Placer County APCD Rule 202 Visible Emission limitations. Operators of vehicles and equipment found to exceed opacity limits are to be immediately notified by APCD to cease operations and the equipment must be repaired within 72 hours.

v. Processes that discharge 2 pounds per day or more of air contaminants, as defined by California State Health and Safety Code Section 39013, to the atmosphere may require a permit. Developers / Contractors should contact the Placer County Air Pollution Control District prior to construction or use of equipment and obtain any necessary permits.

vi. During construction, the contractor shall minimize idling time to a maximum of five (5) minutes for all diesel-powered equipment.

vii. Traffic speeds on all unpaved road surfaces shall be posted at fifteen (15) mph or less.

viii. During construction the contractor shall utilize existing power sources (e.g., power poles) or clean fuel (e.g., gasoline, biodiesel, natural gas) generators to minimize the use of temporary diesel power generators.

ix. All construction equipment shall be maintained in clean condition.

x. The prime contractor shall be responsible for keeping adjacent public thoroughfares clean of silt, dirt, mud, and debris, and shall "wet broom" the streets (or use another method to control dust as approved by the City) if silt, dirt mud or debris is carried over to adjacent public thoroughfares.

xi. If fill dirt is brought to or exported from the construction site, tarps or soil stabilizers shall be placed on the dirt piles to minimize dust problems.

xii. All grading operations shall be suspended when fugitive dust emissions exceed Placer County Air Pollution Control District Rule 228-Fugitive Dust limitations. The prime contractor shall be responsible for having an individual who is CARB-certified to perform Visible Emissions Evaluations ("VEE"). This individual shall evaluate compliance with Rule 228 on a weekly basis.

xiii. Fugitive dust emissions shall not exceed 40% opacity and shall not go beyond the property boundary at any time. If lime or other drying agents are utilized to dry out wet grading areas, the developer shall ensure such agents are controlled so as not to exceed District Rule 228-Fugitive Dust limitations.

xiv. The prime contractor shall suspend all grading operations when wind speeds (including instantaneous gusts) are excessive and dust is impacting adjacent properties.

xv. Water shall be applied to control fugitive dust, as needed, to prevent impacts offsite. Operational water trucks shall be onsite to control fugitive dust. Construction vehicles leaving the site shall be cleaned to prevent dust, silt, mud, and dirt from being released or tracked off-site.

xvi. In order to minimize wind driven dust during construction, the prime contractor shall apply methods such as surface stabilization, establishment of a vegetative cover, paving, (or use another method to control dust as approved by the City).

xvii. Open burning of any kind shall be prohibited. All removed vegetative material shall be either chipped on site or taken to an appropriate recycling site, or if a site is not available, a licensed disposal site.

xviii. Chemical soil stabilizers, vegetative mats, or other appropriate best management practices, in accordance with manufacturers' specifications, shall be applied to all-inactive construction areas (previously graded areas which remain inactive for 96 hours).

xix. All exposed surfaces shall be revegetated as quickly as feasible.

j. The following cultural resource and tribal cultural resource conditions shall be included in the project notes on the improvement plans, to the satisfaction of the City Engineer:

i. If subsurface deposits believed to be historical, archaeological, paleontological, tribal, and/or human in origin are discovered during construction and/or ground disturbance, all work must halt within a 100-foot radius of the discovery. A qualified cultural resources specialist meeting the Secretary of Interior's Standards and Qualifications for Archaeology must assess the significance and determine whether the find is historical, archaeological, paleontological, tribal, and/or human in origin. Based on the assessment, the following notifications shall apply, depending on the nature of the find:

a. If the qualified cultural resources specialist determines that the find does not represent a cultural resource, work may resume immediately and no agency notifications are required.

b. If the qualified cultural resources specialist determines the find may be a tribal cultural resource, a Native American Representative from traditionally and culturally affiliated Native American Tribes shall be immediately contacted and invited to assess the significance of the find and make recommendations for further evaluation and treatment, as necessary. Work at the discovery location cannot resume until it is determined by the City, in consultation with culturally affiliated tribes, that the find is not a tribal cultural resource, or that the find is a tribal cultural resource and all necessary investigation and evaluation of the discovery under the requirements of the CEQA, has been satisfied. The qualified cultural resources specialist shall have the authority to modify the no-work radius as appropriate, using professional judgement.

c. If the qualified cultural resources specialist determines that the find does represent a cultural resource from any time period or cultural affiliation, they shall immediately notify the City. The City and qualified cultural resources specialist shall consult on a finding of eligibility and implement appropriate treatment measures, if the find is determined to be eligible for inclusion in the NRHP or CRHR. Work may not resume within the no-work

radius until the City, through consultation as appropriate, determine that the site either: 1) is not eligible for the NRHP or CRHR; or 2) that the treatment measures have been completed to their satisfaction.

d. If the find includes human remains, or remains that are potentially human, reasonable protection measures shall be taken to protect the discovery from disturbance (AB 2641). The qualified cultural resources specialist shall notify the Placer County Coroner (per §7050.5 of the Health and Safety Code). The provisions of §7050.5 of the California Health and Safety Code, Section 5097.98 of the California Public Resources Code, and Assembly Bill 2641 will be implemented. If the Coroner determines the remains are Native American and not the result of a crime scene, then the Coroner will notify the Native American Heritage Commission, which then will designate a Native American Most Likely Descendant (MLD) for the project (§5097.98 of the Public Resources Code). The designated MLD will have 48 hours from the time access to the property is granted to make recommendations concerning treatment of the remains. If the landowner does not agree with the recommendations of the MLD, then the NAHC can mediate (§5097.94 of the Public Resources Code). If no agreement is reached, the landowner must rebury the remains where they will not be further disturbed (Section 5097.98 of the Public Resources Code). This will also include either recording the site with the NAHC or the appropriate Information Center; using an open space or conservation zoning designation or easement; or recording a reinternment document with the county in which the property is located (AB 2641). Work may not resume within the no-work radius until the lead agency, through consultation as appropriate, determines that the treatment measures have been completed to their satisfaction.

e. If the find includes paleontological resources, work shall not continue at the discovery site until a qualified paleontologist evaluates the find and makes a determination regarding the significance of the resource and identifies recommendations for conservation of the resource, including preserving in place or relocation, if feasible, or collecting the resource to the extent feasible and documenting the find with the University of California Museum of Paleontology

(MITIGATION MEASURE TCR-1)

The project proponent or their construction contractor shall comply with the following measure to assist with identification and treatment of TCRs at the earliest possible time during project-related earthmoving activities:

- The project proponent shall contact the UAIC at least 2 weeks prior to project ground-disturbing activities to retain the services of a Tribal Monitor(s). The duration of the construction schedule and Tribal Monitoring shall be determined at this time.
- A contracted Tribal Monitor(s) shall monitor the vegetation grubbing, stripping, grading, trenching, and other agreed-upon ground-disturbing activities in the project area. All ground-disturbing activities shall be subject to Tribal Monitoring unless otherwise determined unnecessary by the UAIC.
- Tribal Monitors or Tribal Representatives shall have the authority to direct that work be temporarily paused, diverted, or slowed within 100 feet of the immediate impact area if sites or objects of potential significance are identified. The temporary pause/diversion shall be of an adequate duration for the Tribal Representative to examine the resource.
- Appropriate treatment of TCRs may include but is not limited to:
    - Recordation of the resource(s)
    - Avoidance and preservation of the resource(s)
    - Reburial of the resource(s) onsite in a designated area subject to no future disturbance. The location of the reburial shall be acceptable to the UAIC.
- To track the implementation of this measure, the Tribal Monitor(s) shall document field-monitoring activities on a Tribal Monitor log.
- The Tribal Monitor(s) shall wear the appropriate safety equipment while on the construction site and adhere to construction safety procedures and protocols.
- The Tribal Monitor, in consultation with the UAIC THPO and the City shall determine and end or reduction to the onsite monitoring if/when construction activities have a low potential for impacting Tribal Cultural Resources.
- At no time, regardless of the presence or absence of a tribal monitor, shall suspected TCRs be mishandled or disrespected.
- The City shall assist with resolution of disagreements between the project proponent/contractor and the Tribe if such occurs on the project

(MITIGATION MEASURE TCR-2)

The lead agency shall require the applicant/Contractor to provide a tribal cultural resources sensitivity and awareness training program (Worker Environmental Awareness Program [WEAP]) for all personnel involved in project construction, including field consultants and construction workers,

at their own expense. The WEAP shall be developed in coordination with interested Native American tribes.

- The WEAP shall be conducted before any project-related construction activities begin at the project site. The WEAP will include relevant information regarding sensitive cultural resources and tribal cultural resources, including applicable regulations, protocols for avoidance, and consequences of violating State laws and regulations. The WEAP will also describe appropriate avoidance and impact minimization measures for cultural resources and tribal cultural resources that could be located at the project site and will outline what to do and who to contact if any potential cultural resources or tribal cultural resources are encountered. The WEAP will emphasize the requirement for confidentiality and culturally appropriate treatment of any discovery of significance to Native Americans and will discuss appropriate behaviors and responsive actions, consistent with Native American tribal values. The training may be done in coordination with the project archaeologist.
- All ground-disturbing equipment operators shall be required to receive the training and sign a form that acknowledges receipt of the training.
- These mitigation measures shall be incorporated as notes on the project's grading and/or Improvement Plans and shall be implemented prior to any grading or ground/vegetation-disturbing activities.

(MITIGATION MEASURE TCR-3)

k. The following biological resources conditions shall be included in the project notes on the improvement plans, to the satisfaction of the City Engineer:

i. The applicant/developer shall attempt to time the removal of potential nesting habitat for raptors and migratory birds to avoid the nesting season (February 1 through September 15).

If tree and vegetation removal and/or project grading or construction activities would occur during the nesting season for raptors and migratory birds (February-September 15), the developer and/or contractor shall hire a qualified biologist approved by the City to conduct pre-construction surveys no more than 14 days prior to initiation of tree and vegetation removal activities. The survey shall cover all areas of suitable nesting habitat within 500 feet of project activity and shall be valid for one construction season. Prior to the start of tree and vegetation removal activities, documentation of the survey shall be provided to the City of Rocklin Engineering Department and if the survey results are negative, no further mitigation is required and necessary tree and vegetation removal may proceed. If there is a break in construction activities of more than 14 days, then subsequent surveys shall be conducted.

If the survey results are positive (active nests are found), impacts shall be avoided by the establishment of appropriate buffers. The biologist shall consult with the California Department of Fish and Wildlife (CDFW) and the City to determine the size of an appropriate buffer area (CDFW guidelines recommend implementation of 500-foot buffers). Monitoring of the nest by a qualified biologist may be required if the activity has the potential to adversely affect an active nest.

If construction activities are scheduled to occur during the non-breeding season (September 16 – January 31), a survey is not required and no further studies are necessary.

This mitigation measure shall be implemented prior to any grading or ground/vegetation-disturbing activities.

(MITIGATION MEASURE BIO-1)

l. The following traffic conditions shall be included in the project notes on the improvement plans, to the satisfaction of the City Engineer:

To the satisfaction of the City Engineer, install a traffic signal at Driveway A, approximately 450 feet north of the West Stanford Ranch Road/Wildcat Boulevard intersection opposite the existing City of Rocklin Fire Station 25 driveway. In the case of an emergency, the signal would provide preemption for the fire station approach, ensuring priority for emergency access vehicles so that they would not be blocked and spill back to public roadways.

(MITIGATION MEASURE TRA-1)

m. The following air quality conditions shall be included in the project notes on the improvement plans, to the satisfaction of the City Engineer:

All diesel off-road equipment shall have engines that meet the Tier 4 Final off-road emission standards, as certified by CARB. This requirement shall be verified through submittal of an equipment inventory to the City of Rocklin prior to any construction activities that includes the following information: (1) Type of Equipment, (2) Engine Year and Age, (3) Number of Years Since Rebuild of Engine (if applicable), (4) Type of Fuel Used, (5) Engine HP, (6) Verified Diesel Emission Control Strategy (VDECS) information if applicable and other related equipment data. A Certification Statement is also required to be made by the Contractor for documentation of compliance and for future review by the air district as necessary. The

Certification Statement must state that the Contractor agrees to compliance and acknowledges that a violation of this requirement shall constitute a breach of compliance.
This mitigation measure shall be incorporated as notes on the project's grading and/or Improvement Plans and shall be implemented prior to any grading or ground/vegetation-disturbing activities.

(MITIGATION MEASURE AQ-1)

n. The following shall be included in the project notes on the improvement plans:

i. The discharge of fuels, oils, or other petroleum products, chemicals, detergents, cleaners, or similar chemicals to the surface of the ground or to drainage ways on, or adjacent to, the site is prohibited. (ENGINEERING, PUBLIC WORKS, PLACER COUNTY ENVIRONMENTAL HEALTH)

ii. If Best Management Practices are required for control of urban runoff pollutants, then any hazardous materials collected shall be disposed of in accordance with all applicable hazardous materials laws and regulations. (ENGINEERING, PUBLIC WORKS, PLACER COUNTY ENVIRONMENTAL HEALTH)

5. <u>Improvements in the Public Right-of-Way</u>

a. Unless already completed to the satisfaction of the City Engineer, the applicant shall obtain an encroachment permit for all improvements within the public right-of-way. Applicant shall post a performance bond and labor and materials payment bond (or other equivalent financial security) in the amount of 100% of the cost of the improvements to be constructed in the public right-of-way as improvement security to ensure the faithful performance of all duties and obligations required of applicant in the construction of the improvements. Such improvement security shall be in a form acceptable to the City Attorney. Such security shall be either a corporate surety bond, a letter of credit, or other instrument of credit issued by a banking institution subject to regulation by the State or Federal government and pledging that the funds necessary to carry out this Agreement are on deposit and guaranteed for payment, or a cash deposit made either directly with the City or deposited with a recognized escrow agent for the benefit of the City. (PUBLIC WORKS)

b. Prior to issuance of the certificate of occupancy, the Developer shall perform the following work at the signalized intersection of Wildcat

Boulevard / West Stanford Ranch Road / Chaffrey Way to the satisfaction of the City Engineer:

i. Convert the traffic signal operations from the existing 8-phases to split phase operations for Wildcat Boulevard and Chaffrey Way.

ii. Convert the center, southbound lane on Wildcat Boulevard from a shared thru/right to a shared left/thru/right; replace mast arm-mounted regulatory signage to match the proposed lane assignments.

iii. Eliminate the pedestrian crosswalk on the west leg of the intersection. The process to perform this shall comply with the California Manual on Uniform Traffic Control Devices (CA MUTCD) and the California Vehicle Code (CVC), which shall include coordination with the City Engineer on the timing and conducting of a public comment period. The Developer shall install notifications at the crosswalk on each end with language of the notification to be approved by the City Engineer prior to the Developer deploying signage in the field. Additionally, the Developer shall remove the existing crosswalk striping, install a Type 2 slurry seal across the whole of the crosswalk (estimated to be 110 feet long by 13 feet wide), remove the pedestrian push button assemblies, and remove/replace the existing pedestrian signal indications (i.e., ped heads). The regulatory signage on the southbound approach identifying an existing crosswalk shall be removed. The Developer shall install appropriate signage prohibiting pedestrians from crossing where the existing crossing exists.

c. Prior to issuance of the certificate of occupancy, the Developer shall install a complete and functioning traffic signal, with approved traffic pre-emption devices, at the intersection of Wildcat Boulevard / Fire Station 25 / Chapede Indian Health Center driveway to the satisfaction of the City Engineer.

6. <u>Landscaping</u>

a. Final landscape plans shall be provided by the developer and approved by the Community Development Director. The landscape plans shall comply with the following requirements (PLANNING):

i) The landscaping plan shall be prepared by a landscape architect and shall include:

(1) A legend of the common and botanical names of specific plant materials to be used. The legend should indicate the size and quantities of plant materials.

Shrubs shall be a minimum of 5 gallon and trees shall be a minimum of 15 gallon and meet the minimum height specified by the American Standards for Nursery Stock.

(2) A section diagram of proposed tree staking, utilizing metal posts.

(3) An irrigation plan including an automatic irrigation system. The plan shall include drip irrigation wherever possible.

(4) Berming of landscape strips along the public right-of-way and the installation of shrubs (or a screen wall of 24 to 30 inches to match the building architecture or other project walls) to screen the undercarriages of vehicles as viewed from off-site. {Also, keep in mind screening headlights when a drive-through lane or parking spaces face toward a public street.}

(5) Provision for the shading of the parking lot, including parking spaces, maneuvering areas, drive ways and drive throughs, excluding all or portions of loading docks/facilities, trash enclosure approaches, and other loading areas by shade trees of appropriate size(s) and characteristic(s) in locations to achieve a minimum of 50% shading at maturity (15 years from planting) Include a calculation demonstrating compliance with this condition on the plan. If parking lot shade trees shown in Exhibit A are in conflict with infrastructure and/or utilities, the landscape plan shall be modified so that the required 50% minimum shading is maintained via number of trees and/or size of canopies.

(6) Granite or moss rock boulders along the planting strips.

7) Use of plastic composite-style header boards or better.

8) Use walk-on bark in all planter areas unless noted otherwise on the plans (e.g., dry creek bed cobble, DG, or other).

ii) The plan shall be certified by the landscape architect that the landscape plan meets the requirements of the Water Conservation in Landscaping Act. Government Code §65591, et seq.

i) The plant tags shall not be removed until the final inspection of the landscape is complete.

b. The parking lot lighting plan shall be designed to accommodate shade trees and provide for illumination of the parking areas. Light standards and underground utilities shall be located such that required parking lot shade trees can still be planted. (ENGINEERING, BUILDING, PLANNING)

c. All landscaping shall be installed and the landscape architect shall certify, in writing, that the landscaping and irrigation system have been installed in full compliance with the approved plans prior to issuance of a Certificate of Occupancy. (PLANNING)

7. Landscaping Maintenance Agreement

Prior to issuance of the Certificate of Occupancy, the property owner shall enter into an agreement with the City of Rocklin providing for the maintenance of landscaping and irrigation within the public right-of-way along Wildcat Boulevard and West Stanford Ranch Road. The agreement shall stipulate that the property owner shall maintain the irrigation system and all plant materials. The agreement shall also indemnify the City against claims arising from developer's activities and shall be recorded and binding on successors in interest of the developer. (ENGINEERING, PUBLIC WORKS)

8. Lighting

All exterior lighting shall be designed and installed to avoid adverse glare on adjacent properties. Cut-off shoebox type or decorative lighting fixtures consistent with Exhibit A, or approved equivalent, shall be used and mounted such that all light is projected directly toward the ground. Light poles shall be a maximum of 20 feet in height as measured from grade to the top of the light. The lighting design plan shall be approved by the Community Development Director for compliance with this condition. (PLANNING)

9. Design

a. The architecture, colors and materials of the buildings shall substantially comply with Exhibit A. (PLANNING)

b. The back or rear of any parapet wall that may be visible from an adjacent right-of-way or property shall be painted the same color as the front of the parapet wall to provide a more finished appearance. (PLANNING)

10. Signs

All signs shall conform to the Sign Ordinance of the City of Rocklin and the sign designs and locations as shown on Exhibit A, except as modified herein. (PLANNING, ENGINEERING, FIRE)

a. The monument signs shall be located outside of any public utility easements.

11. Screening of Mechanical Equipment

a. All mechanical and/or related equipment, such as but not limited to, roof hatch railings, RTUs, vents, HVAC units, whether ground- or roof-mounted shall be screened from view from all public rights-of-way to the satisfaction of the Community Development Director. To the greatest extent feasible, parapet walls should be used to screen roof-mounted equipment. The design of the screening shall be in harmony with the architectural design of the building. (PLANNING)

b. The appearance of large utility features such as double detector check valves shall be minimized through the use of utility blankets or other acceptable screening methods. The developer shall also demonstrate that these facilities have been moved as far as possible from the public right-of-way. (PLANNING)

12. Security

a. Prior to building permit issuance, the applicant shall prepare a security plan for review by the Rocklin Police Department, and shall provide the Rocklin Police Department with the name(s) and telephone number(s) of a responsible party to contact for each of the businesses. (POLICE)

b. Prior to building / unit occupancy the property owner, or each tenant, shall obtain and maintain at all times, an Alarm System Permit for each security system installed and operated in the buildings, if any, in accord with the requirements of Chapter 9.44 of the Rocklin Municipal Code. (POLICE)

13. Maintenance

a. The property owner shall remove within 72 hours all graffiti placed on any fence, wall, existing building, paved area or structure on the property consistent with the provisions of Rocklin Municipal Code Section 9.32. Prior to removal of said graffiti, the property owner shall report the graffiti vandalism to the Rocklin Police Department. (PLANNING, POLICE)

b. The project, including but not limited to paving, landscaping, structures, and improvements shall be maintained by the property owners, to the standard of similarly situated properties in equivalent use zones, to the satisfaction of the Community Development Director. (PLANNING)

c. The outdoor seating area shall be maintained free of trash and any other debris to the satisfaction of the Community Development Director. (PLANNING)

14. Riparian Area and Creek Protection

a. An open space easement shall be recorded to the satisfaction of the City Engineer and shall be over that portion of the project site depicted on Exhibit A for purposes of riparian area and creek protection (PLANNING, ENGINEERING)

15. Air Quality

a. Electrical receptacles shall be installed in the exterior walls of the building(s) in this project to promote the use of electrical landscaping equipment. (BULDING, PLANNING)

b. Low nitrous oxide (NOx) natural gas hot water heaters shall be installed, if gas hot water heaters are to be used in this project. (BUILDING, PLANNING)

16. Hours of Operation

The hours of operation are as follows: 7am to 7 pm, 7 days a week.

(PLANNING)

17. Noise

a. All “self-powered” construction equipment and stationary noise sources (i.e., pumps, electrical generators, etc.) shall be equipped with noise control devices (e.g., mufflers). (ENGINEERING, BUILDING)

b. Equipment “warm-up” areas, water storage tanks, equipment storage areas, and stationary noise-generating machinery (i.e., pumps, electrical generators, etc.) shall be located away from existing residences and other sensitive noise receptors to the extent feasible. (ENGINEERING, BUILDING)

c. All phases of project development shall be subject to the City of Rocklin Construction Noise Guidelines, including restricting construction-related noise generating activities within or near residential areas to between 7:00 a.m. and 7:00 p.m. on weekdays, and between 8:00 a.m. and 7:00 p.m. on weekends. This noise restriction shall be posted at all entrances to the project site prior to any construction activities; the sign(s) shall be weather proof and a minimum size of 2’ x 2’. The Community Development Director may grant exceptions to the Construction Noise Guidelines if, in the opinion of the Community Development Director, special and unusual circumstances exist that make strict adherence to the Construction Noise Guidelines infeasible. (ENGINEERING, BUILDING)

d. The developer shall provide a Noise Coordinator and adhere to the following: (ENGINEERING, BUILDING)

i. As a function of on-site project management, an on-site Noise Coordinator shall be employed by the developer, and their name and telephone number along with instructions on how to file a noise complaint shall be posted conspicuously around the project site, and at all vehicle entrances to public streets, during all project construction phases. The posted signage shall include the construction hours allowed by City policy and shall be sized large enough to include 3-inch tall lettering.

ii. The Noise Coordinator’s duties shall include fielding and documenting noise complaints, determining the source of the complaint (e.g., piece of construction equipment), determining whether noise levels at the project boundary are within acceptable limits consistent with the General Plan hourly noise standards and with this condition (see 14.c. above), and reporting complaints to the City with documented noise levels at the time of complaint via email.

iii. The Noise Coordinator shall work, to the extent feasible, with the surrounding residents and project contractors to schedule activities to minimize disturbance of residents during the daytime hours. Prior to commencement of any night time work required by the City or utility companies, approval from the Community Dev Director is required. The request for approval shall be submitted not less than 72 hours in advance of the work commencing and the Noise

Coordinator shall provide documentation of notification to the neighboring property owners.

e. Use of a public address system that can be heard outside of the building is prohibited. (PLANNING)

f. Use of an amplified sound system to provide music for the outdoor seating area is permissible however such music is intended to be a muted background noise and should not be audible from a distance of 100-feet from the building. (PLANNING)

18. Indemnification and Duty to Defend.

As a condition for project approval, Owner or an agent of Owner acceptable to City shall defend, indemnify, and hold harmless the City and its agents, officers, and employees from any claim, action, or proceeding, against the City or its agents, officers, and employees; including all costs, attorneys' fees, expenses, and liabilities incurred in the defense of such claim, action, or proceeding to attack, set aside, void or annul an approval by the City and its agents, officers, and employees, or other City advisory agency, appeal board, or legislative body concerning this project approval. City shall promptly notify owner of any such claim, action, or proceeding and shall cooperate fully in the defense of said claim, action, or proceeding. (CITY ATTORNEY)

19. Validity

a. This entitlement shall expire three years from the date of approval unless prior to that date a building permit has been issued or a time extension has been granted. (PLANNING)

b. Approval of this entitlement does not relieve the developer of the need to obtain subsequent permits and approvals, such as but not limited to Grading Permits, Improvement Plans, and Building Permits. (PLANNING)

PASSED AND ADOPTED this 6th day of August, 2024, by the following vote:

AYES:	Commissioners:	Armstrong, Barron, Cortez, McKenzie, Thomas
NOES:	Commissioners:	None
ABSENT:	Commissioners:	None
ABSTAIN:	Commissioners:	None

Twiana Armstrong

Twiana Armstrong, Chairperson

ATTEST:

Terry Stemple

Terry Stemple, Secretary

EXHIBIT A

Chapa-De Indian Health South Placer Facility (DR2023-0014)

Project Location

ROCKLIN
CALIFORNIA

City Council Staff Report

Subject: Corporation Yard Storefront Glass Replacement Notice of CEQA Exemption and Bid Award

Date: February 25, 2025

Submitted By: Matt McClure, Public Works Manager
Justin Nartker, Public Works Director

Department: Public Works

Recommendation:

A. Adopt a Resolution of the City Council of the City of Rocklin Approving a Notice of Exemption (Corporation Yard Storefront Glass Replacement).
B. Adopt a Resolution of the City Council of the City of Rocklin Awarding the Contract for the Corporation Yard Storefront Glass Replacement to American Window and Door Systems, Inc. and Authorizing the City Manager to Execute an Agreement.

Background:

The Corporation Yard Storefront Glass Replacement Project is included in the Fiscal Year (FY) 2024/25 Operating Budget approved by the City Council on June 25, 2024. The Project consists of removing and replacing the original storefront-style glass that is part of the building's existing structure (see Attachment No. 3 - Project Location Map).

The bid for the Corporation Yard Storefront Glass Replacement was advertised on December 13, 2024, and December 20, 2024, with the bid opening on Tuesday, January 21, 2025. Three (3) bids were received from the following companies (see Attachment 4 - Bid Summary):

CONTRACTOR (Location)	BID AMOUNT
American Window and Door Systems, Inc. (Napa)	$50,000
North Painting & Construction (Rancho Cordova)	$62,700
Moule's Foothill Glass (Auburn)	$67,680

Staff has reviewed the bids for sufficiency, confirmed they were responsive, and determined American Window and Door Systems, Inc. submitted the lowest responsible bid. Staff recommends that the City Council award the contract to American Window and Door Systems, Inc. Pursuant to Rocklin Municipal Code section 3.04.050, the City Manager will have change order authority up to fifteen (15) percent of the contract amount ($7,500) for a total authorized project amount of $57,500.

Environmental Analysis:
The City of Rocklin's Environmental Coordinator has reviewed the Corporation Yard Storefront Glass Replacement and determined that it is exempt from review under the California Environmental Quality Act (CEQA) pursuant to California Code of Regulations Section 15301 and has prepared a Notice of Exemption.

Fiscal Impact:
The cost for this project is included in the FY 2024/25 Operating Budget and is funded using the General Fund.

ATTACHMENTS:
1. Resolution A - Notice of Exemption
2. Resolution B - Contract Award
3. Project Location Map
4. Bid Summary

RESOLUTION NO. 2025-

RESOLUTION OF THE CITY COUNCIL OF THE CITY OF ROCKLIN
APPROVING A NOTICE OF EXEMPTION
(Corporation Yard Storefront Glass Replacement)

WHEREAS, the City of Rocklin's Environmental Coordinator has reviewed the Corporation Yard Storefront Glass Replacement ("Project") and determined that it is exempt from review under the California Environmental Quality Act pursuant to California Code of Regulations Section 15301 – Existing Facilities; and

WHEREAS, a Notice of Exemption has been prepared for the Project.

NOW, THEREFORE, BE IT RESOLVED by the City Council of the City of Rocklin as follows:

Section 1. Based on the review and determination of the Environmental Coordinator, the City Council of the City of Rocklin finds that the Project is exempt from review under the California Environmental Quality Act.

Section 2. A Notice of Exemption is approved for the Project.

Section 3. Upon approval of the Project by the City Council, the Environmental Coordinator may file the Notice of Exemption with the County Clerk of Placer County and, with the State Office of Planning and Research, pursuant to the provisions of Section 21152(b) of the Public Resources Code and the State EIR Guidelines adopted pursuant thereto.

PASSED AND ADOPTED this 25th day of February, 2025, by the following

vote: AYES: Councilmembers:

NOES: Councilmembers:

ABSENT: Councilmembers:

ABSTAIN: Councilmembers:

_____
Jill Gayaldo,Mayor

ATTEST:

_____
Avinta Singh, City Clerk

NOTICE OF EXEMPTION

TO: ☐ County Clerk
County of Placer
2954 Richardson Blvd.
Auburn, CA 95604-5228

☐ Office of Planning and Research
P.O. Box 3044, Room 113
Sacramento, CA 95812-3004

FROM: City of Rocklin
Public Works Department
4081 Alvis Court
Rocklin, CA 95677

Project Title: Corporation Yard Storefront Glass Replacement

Project Location - Specific: City of Rocklin, Department of Public Works Corporation Yard, 4081 Alvis Court, Rocklin, California, 95677, Accessor Parcel Number 045-012-001-000

Project Location - City: Rocklin, CA Project Location - County: Placer

Description of Nature, Purpose and Beneficiaries of Project: The proposed project includes the removal and replacement of original storefront glass associated with the City of Rocklin, Department of Public Works Corporation Yard main building. The existing storefront glass was installed in the early 1990's during construction of the Corporation Yard main building and has reached its average useful life. Work includes removal and replacement of existing exterior doors and windows, and repairing associated framing, flashing, trim, sills, thresholds and other structural and watertight connections associated with the building façade.

Name of Public Agency Approving Project: City of Rocklin

Name of Person or Agency Carrying Out Project: City of Rocklin

Exempt Status (Check one)

☒ Categorical Exemption (California Code of Regulations, Title 14, Division 6, Chapter 3, California Environmental Quality Act [CEQA] Guidelines, Section 15301, Class 1 – Existing Facilities)

Reasons why the project is exempt: Activities under this proposed project include the repair, maintenance, and minor alteration of existing public structures and facilities, involving negligible or no expansion of existing or former use, are categorically exempt under CEQA Guidelines, Section 15301 (Class 1 – Existing Facilities).

Contact Person: Justin Nartker, Public Works Director, City of Rocklin, Public Works Department, 4081 Alvis Court, Rocklin, CA, 95677, (916) 625-5500

Signature: _____ Date: _____
Justin Nartker, Public Works Director

RESOLUTION NO. 2025-

RESOLUTION OF THE CITY COUNCIL OF THE CITY OF ROCKLIN AWARDING THE CONTRACT FOR THE CORPORATION YARD STOREFRONT GLASS REPLACEMENT TO AMERICAN WINDOW AND DOOR SYSTEMS, INC. AND AUTHORIZING THE CITY MANAGER TO EXECUTE AN AGREEMENT

WHEREAS, the Corporation Yard Storefront Glass Replacement consists removing and replacing the original storefront-style glass that is part of the Corporation Yard building's existing structure; and

WHEREAS, the invitation for bids was advertised December 13, 2024, and December 20, 2024, with the bid opening Tuesday, January 21, 2025, and bids were thereafter examined and found to be in compliance with all applicable specifications; and

WHEREAS, the lowest responsible bid was determined to be $50,000.00, submitted by American Window and Door Systems, Inc. and staff recommends that the contract for the project be awarded to American Window and Door Systems, Inc.; and

WHEREAS, pursuant to the Rocklin Municipal Code, section 3.04.050, a contingency amount of fifteen (15) percent of the contract $7,500.00, is automatically authorized for all public works project contracts awarded by the City Council or the City Manager, as long as adequate funds have been appropriated, bringing the total authorized Project amount to $57,500; and

WHEREAS, this project is funded using General Fund (100).

NOW, THEREFORE, the City Council of the City of Rocklin does resolve as follows:

Section 1. The contract for the Corporation Yard Storefront Glass Replacement is awarded to American Window and Door Systems, Inc. and the City Manager is authorized to execute the Agreement with American Window and Door Systems, Inc. in substantially the form attached hereto as Exhibit "A."

PASSED AND ADOPTED this 25th day of February, 2025, by the following vote:

AYES: Councilmembers:
NOES: Councilmembers:
ABSENT: Councilmembers:
ABSTAIN: Councilmembers:

_____
Jill Gayaldo, Mayor

ATTEST:

_____
Avinta Singh, City Clerk

EXHIBIT A
CONSTRUCTION AGREEMENT

THIS AGREEMENT, dated for identification as of February 25, 2025, is between the **CITY OF ROCKLIN**, a municipal corporation, (hereinafter called "City"), and **American Window and Door Systems, Inc.,** a Corporation (hereinafter called "Contractor").

The parties hereto mutually agree to the terms and condition set forth herein.

I. CONTRACT DOCUMENTS

A. The Contract Documents referred to herein are incorporated herein by reference as if set forth in full in this Agreement.

B. Work called for in any one Contract Document and not mentioned in another is to be performed and executed as if mentioned in all Contract Documents. The table of contents, titles and headings contained herein and in said documents are solely to facilitate reference to various provisions of the Contract Documents and in no way affect or limit the interpretations of the provisions to which they refer.

C. The Contract Documents shall include the Notice to Contractors, Addenda, Bid Form, Agreement, Plans, General Provisions, Special Provisions, General Requirements (Division 1), Technical Specifications (Divisions 2 through 16), Permits from other agencies as may be required by law, City of Rocklin Construction Specifications, Improvement Standards and Standard Drawings, Caltrans Standard Plans and Specifications as applicable, Standard Forms, Supplemental Drawings, all required bonds, Exhibits, the Contract Schedule, Storm Water Pollution Prevention Plan (whether prepared by the City or the Contractor) and any and all supplemental agreements amending or extending the Work contemplated and which may be required to complete the Work in an acceptable manner. Supplemental agreements are written agreements covering alterations, amendments or extensions to the Contract Documents and include Change Orders, Construction Change Directives, Field Directives, Field Orders and Supplemental Drawings.

D. The General Provisions shall mean and refer to the current General Provisions of the City of Rocklin, which are incorporated herein by this reference as if set forth herein.

II. DEFINITIONS

Unless otherwise specifically provided herein, all works and phrases defined in the General Provisions shall have the same meaning and intent in this Agreement.

III. AGREEMENT CONTROLS

In the event of a conflict between the terms and conditions as set forth in this Agreement and the terms and conditions set forth in other Contract Documents, the terms and conditions set forth in this Agreement shall prevail.

IV. SCOPE OF CONTRACT

Contractor agrees to furnish

all tools, equipment, apparatus, facilities, labor and material and transportation necessary to perform and complete in a good and workman like manner to the satisfaction of City, all the work required for the Contract for the Project entitled: Corporation Yard Storefront Glass Replacement

V. CONTRACT AMOUNT AND PAYMENTS

City agrees to pay and Contractor agrees to accept, in full payment for the above work, **FIFTY-THOUSAND DOLLARS ($50,000.00)** as the stipulated sum price which Contractor bid in its Bid Form, subject to additions and deductions by Change Order(s) as provided in the General Conditions.

VI. PROGRESS AND FINAL PAYMENTS

Progress and final payments shall be in accordance with the General Provisions.

IIIII. RETENTION OF SUMS CHARGED AGAINST CONTRACTOR

When, under the provisions of this contract, City shall charge any sum of money against Contractor, City shall deduct and retain the amount of such charge from the amount of the next succeeding progress estimate, or from any other moneys due or that may become due to the Contractor from City. If, on completion or termination of the Contract, sums due contractor are insufficient to pay City's charges against him, City shall have the right to recover the balance from Contractor or his sureties.

IVIII. TIME OF COMPLETION

A. The entire Work shall be brought to completion in the manner and within the time period provided for in the Contract Documents, commencing on the date of issuance of the Notice to Proceed.

B. Failure to complete the Work by the completion date and in the manner provided for by the Contract Documents shall subject Contractor to liquidated damages as hereinafter provided in this Agreement. Time is of the essence in these Contract Documents.

IX. INSURANCE

Contractor shall maintain in full force and effect at all times during the term of the Agreement, at its sole expense, policies of insurance in accordance with the General Provisions.

X. NO WAIVER OF REMEDIES

A. Neither the inspection by City or its agents, nor any order or certificate for the payment of money, nor any payment for, nor acceptance of the whole or any part of the Work by City, nor any extensions of time, nor any position taken by City or its agents shall operate as a waiver of any provision of this Agreement or of any power herein reserved to City or any right to damages herein provided, nor shall any waiver of any breach of the Agreement be held to be a waiver of any other or subsequent breach.

B. All remedies provided in this Agreement shall be taken and construed as cumulative; that is, in addition to each and every other remedy herein provided, and City shall have any and all equitable and legal remedies which it would in any case have.

XI. DETERMINATION OF DAMAGES

A. The actual fact of the occurrences of damages and the actual amount of the damages which City would suffer if the Work were not completed within the specified times set forth are dependent upon many circumstances and conditions which could prevail in various combinations, and, from the nature of the case, it is impracticable and extremely difficult to fix the actual damages.

B. Damages which City would suffer in the event of delay include loss of the use of the Project, and, in addition, expenses of prolonged employment of an architectural and engineering staff; costs of administration, inspection, and supervision; and the loss suffered by the public within the City of Rocklin by reasons of the delay in the completion of the

Project to serve the public at the earliest possible time.

C. Accordingly, the parties hereto agree, and by execution of this Agreement, Contractor acknowledges that it understands, has ascertained and agrees, that the amounts set forth herein as liquidated damages shall be presumed to be that amount of damages sustained by the failure of Contractor to complete the entire work within the times specified.

XII. LIQUIDATED DAMAGES

A. The amount of the liquidated damages to be paid by Contractor to City for failure to complete the entire work in the specified number of Working or Calendar Days (as extended, if applicable) will be Five Hundred Dollars **($500.00)** for each **Calendar day**, continuing to the time at which the Work is completed.

B. Such amount is the actual cash value agreed upon as the loss to City resulting from Contractor's delay.

XIII. TERMINATION AFTER ALLOTTED WORKING OR CALENDAR DAYS

A. In addition to any rights it may have, City may terminate this Contract or the Contractor's right to proceed at any time after the allotted number of Working or Calendar Days as adjusted by any extensions of time for excusable delays that may have been granted.

B. Upon such termination Contractor any compensation shall be in accordance with Section 5.23 of the General Provisions, and it shall be liable to City for liquidated damages for all periods of time beyond such termination date until the Work is completed.

XIV. CONTRACTOR BANKRUPT

A. If Contractor should commence any proceeding under the Bankruptcy Act, or if contractor be adjudged a bankrupt, or if Contractor should make any assignment for the benefit of creditors, or if a receiver should be appointed on account of Contractor's insolvency, then the City Council may, without prejudice to any other right or remedy, terminate the Contract and complete the work by giving notice to Contractor and his surety according to the provisions of Article 5 of the General Provisions.

B. City shall have the right to complete, or cause completion of the work, all as specified in the General Provisions of the General Provisions.

XV. PERFORMANCE AND PAYMENT BONDS

A. The Contractor shall, before beginning said work, file two bonds with the City, each made payable to the City. These bonds shall be issued by a Surety Company authorized to do business in the State of California, and shall be maintained during the entire life of the Contract at the expense of the Contractor.

   1. One bond shall be in the amount of one hundred percent (100%) of the Contract and shall guarantee the Faithful Performance of the Contract.
   2. The second bond shall be the Payment Bond required by Part 4, Title 15, Chapter 7, Division Three of the Civil Code of the State of California and shall be in the amount of one hundred percent (100%) of the Contract.

B. Any alteration or alterations made in any provision of this Contract shall not operate to release any surety from liability on any bond required hereunder and the consent to make such alterations is hereby given, and any surety on said bonds hereby waives the provisions of Section 2819 of the Civil Code.

C. Bonds shall only be accepted from an *"Admitted surety insurer"*, which means an insurer to which the Insurance Commissioner has issued a certificate of authority to transact surety insurance in this state. ***Contractor must submit all of the following with the bonds***:

   - The original, or a certified copy, of the unrevoked appointment, power of attorney, bylaws or other instrument entitling or authorizing the person who executed the bond to do so.

XVI. SUBSTITUTION OF SECURITIES OF MONEY WITHHELD

A. At any time prior to final payment, Contractor may request substitution of securities for any money withheld by the City to ensure performance of the Contract.

B. At the expense of the Contractor, securities equivalent to the money withheld may be deposited with the City or with an approved financial institution as escrow agent according to a separate Security Agreement.

C. Securities eligible for substitution shall include those listed in Section 16430 of the Government Code or bank or savings and loan certificates of deposit. A fee set by the City Council shall be charged for such substitution.

XVII. LABOR CODE COMPLIANCE

A. City affirmatively identifies this project as a “public work” as that term is defined by Labor Code section 1720, and the project is, therefore, subject to prevailing wages under Labor Code section 1771.

B. Contractor and its subcontractors shall fully comply with all the provisions of the California Labor Code governing the performance of public works contracts including, but not limited to, payment of prevailing wages, limitations on time worked, compliance with apprentice requirements, maintenance of payroll records, posting of wages at job site and prohibitions against discrimination.

XVIII. UNFAIR COMPETITION

A. The following provision is included in this agreement pursuant to California Public Contract Code §7103.5.

> "In entering into a public works contract or a subcontract to supply goods, services, or materials pursuant to a public works contract, the contractor or subcontractor offers and agrees to assigning to the awarding body all rights, title, and interest in and to all causes of action it may have under Section 4 of the Clayton Act (15 U.S.C. Sec. 15) or under the Cartwright Act (Chapter 2 (commencing with Section 16700) of Part 2 of Division 7 of the Business and Professions Code), arising from purchases of goods, services, or materials pursuant to the public works contract or the subcontract. This assignment shall be made and become effective at the time the awarding body tenders final payment to the contractor, without further acknowledgment by the parties."

XIX. ASSIGNMENT

Neither this Agreement nor any rights herein of Contractor shall be assigned without the written consent of City first obtained.

XX. NO THIRD PARTY BENEFICIARIES

This Agreement is entered into solely between the City and Contractor. There are no third party beneficiaries, intended, unintended, or otherwise to this Agreement.

/////SIGNATURE PAGE FOLLOWS/////

IN WITNESS WHEREOF, the parties hereto have signed the Agreement on the date set forth opposite their names.

CONTRACTOR:

(California Corporations: must be signed by company's CEO, President, or Vice President *as well as* the Secretary or CFO.)

Date

Tax I.D. Number

Signature

Signature

Print Name

Print Name

Title

Title

CITY OF ROCKLIN, A Municipal Corporation:

Aly Zimmermann, City Manager

APPROVED AS TO FORM:

Matthew McOmber, City Attorney

ATTEST:

Avinta Singh, City Clerk

CERTIFICATE OF ACKNOWLEDGMENT pursuant to Civil Code, Section 1189, must be provided for Contractor's signature.

A notary public or other officer completing this certificate verifies only the identity of the individual who signed the document to which this certificate is attached, and not the truthfulness, accuracy, or validity of that document.

NOTARY TO ATTACH CURRENT ACKNOWLEDGMENT

Project Location Map

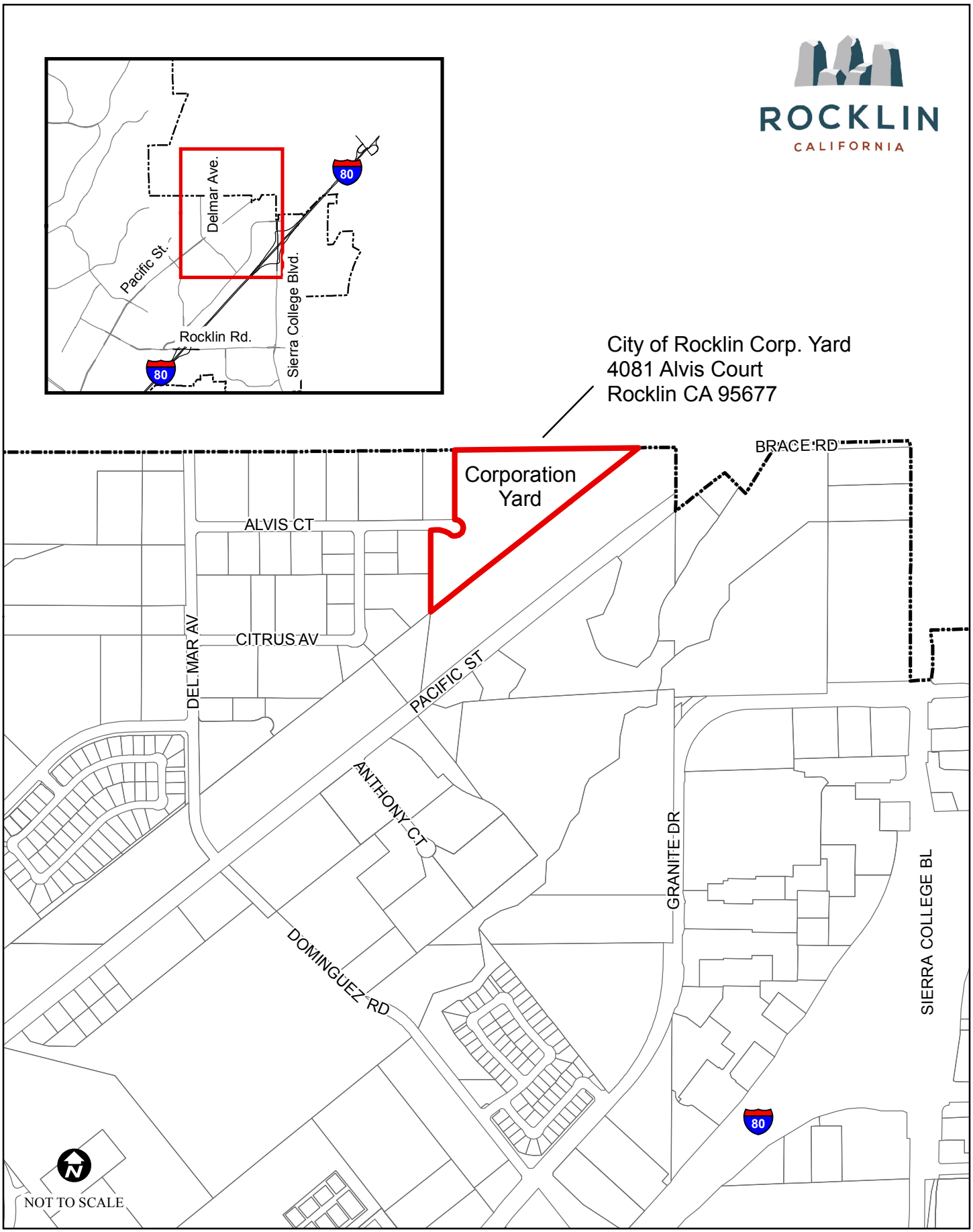

ROCKLIN
CALIFORNIA

CITY OF ROCKLIN BID SUMMARY

PROJECT: Corporation Yard Store Front Glass Replacement	
DATE: January 21, 2025	TIME: 2:00pm

Name/Address/Phone of Bidder	Bid Amount	Alt. Bid Amt	Addendum(S) Acknowledged	Bid Bond / Cashier Check
1. North Painting & Construction	$62,700.00	$	✓	✓
* 2. American Window & Door Systems Inc..	$50,000.00	$	✓	✓
3. Moule's Foothill Glass	$67,680.00	$	✓	✓
4.	$	$		
5.	$	$		
6.	$	$		
7.	$	$		
8.	$	$		
9.	$	$		
10.	$	$		

Diane Ahn
Diane Ahn, Finance

1/21/2025
Date

Avinta Singh, City Clerk

1/21/2025
Date

City Council Staff Report

Subject: Corporation Yard Generator Bid Award

Date: February 25, 2025

Submitted By: Matt McClure, Public Works Manager
Justin Nartker, Public Works Director

Department: Public Works

Recommendation:

A. Adopt a Resolution of the City Council of the City of Rocklin Approving A Notice of Exemption (Corporation Yard Emergency Generator).
B. Adopt a Resolution of the City Council of the City of Rocklin Awarding the Contract for the Corporation Yard Emergency Generator to James Day Construction, Inc., and Authorizing the City Manager to Execute an Agreement with James Day Construction, Inc.

Background:

The Corporation Yard Emergency Generator project consists of the installation of a 275 kilowatt emergency generator at the City of Rocklin Corporation Yard located at 4081 Alvis Court. (see Attachment 4 - Project Location Map). The funding for project design was included in previous budgets. Design has been completed and reviewed by staff, and the project has been bid and is ready for award.

The bid for the Corporation Yard Emergency Generator was advertised on September 20, 2024, and September 27, 2024, with the bid opening Wednesday, October 16, 2024. Five (5) bids were received from the following (see Attachment 5 - Bid Summary).

CONTRACTOR	BID AMOUNT
Unwired BB LLC (Fresno)	$205,000
James Day Construction, Inc. (Clearlake)	$212,602
Sauren Construction, Inc. (Newcastle)	$214,703
Proterra Builders, Inc. (Apple Valley)	$245,800
Vanden Bos Electric, Inc. (Roseville)	$280,900

Staff reviewed the apparent low bid submitted by Unwired BB LLC and found them to be non-responsive as they did not meet the licensing requirements identified in the bid documents. Staff has reviewed the remaining bids for sufficiency, determined that James Day

Construction, Inc. was responsive and submitted the lowest responsible bid. Staff recommends that the City Council award the contract to James Day Construction, Inc. in the amount of $212,602. Pursuant to the Rocklin Municipal Code section 3.04.050, the City Manager will have change order authority up to fifteen (15) percent of the contract amount ($31,890.30), for a total not to exceed amount of $244,492.30.

Environmental Analysis:
The City of Rocklin's Environmental Coordinator has reviewed the Corporation Yard Emergency Generator and determined is exempt from review under the California Environmental Quality Act (CEQA) pursuant to California Code of Regulations Section 15301 & 15303, and has prepared a Notice of Exemption.

Fiscal Impact:
In Fiscal Year 2021/22, the City Council approved $200,000 in funding and set aside the funds in the General Fund (100) fund balance for the recommended work. A budget appropriation of the same amount is now required from this fund balance. Additional funding needed to award the contract will be covered through anticipated operational savings.

ATTACHMENTS:
1. Resolution A - Notice of Exemption
2. Resolution B - Bid Award
3. Resolution B Exhibit A - Agreement
4. Project Location
5. Bid Summary

RESOLUTION NO. 2025-

RESOLUTION OF THE CITY COUNCIL OF THE CITY OF ROCKLIN
APPROVING A NOTICE OF EXEMPTION
(Corporation Yard Emergency Generator)

WHEREAS, the City of Rocklin's Environmental Coordinator has reviewed the Coporation Yard Emergency Generator, ("Project") and determined that it is exempt from review under the California Environmental Quality Act pursuant to California Code of Regulations Sections 15301 – Existing Facilities, 15303 – New Construction or Conversion of Small Structures; and

WHEREAS, a Notice of Exemption has been prepared for the Project.

NOW, THEREFORE, BE IT RESOLVED by the City Council of the City of Rocklin as follows:

Section 1. Based on the review and determination of the Environmental Coordinator, the City Council of the City of Rocklin finds that the Project is exempt from review under the California Environmental Quality Act (CEQA).

Section 2. A Notice of Exemption is approved for the Project.

Section 3. Upon approval of the Project by the City Council, the Environmental Coordinator may file the Notice of Exemption with the County Clerk of Placer County and with the State Office of Planning and Research, pursuant to the provisions of Section 21152(b) of the Public Resources Code and the State EIR Guidelines adopted pursuant thereto.

PASSED AND ADOPTED this 25th day of February, 2025, by the following vote:

AYES: Councilmembers:
NOES: Councilmembers:
ABSENT: Councilmembers:
ABSTAIN: Councilmembers:

_____
Jill Gayaldo, Mayor

ATTEST:

_____
Avinta Singh, City Clerk

NOTICE OF EXEMPTION

TO: ☐ County Clerk
County of Placer
2954 Richardson Blvd.
Auburn, CA 95604-5228

☐ Office of Planning and Research
P.O. Box 3044, Room 113
Sacramento, CA 95812-3004

FROM: City of Rocklin
Public Works Department
4081 Alvis Court
Rocklin, CA 95677

Project Title: Corporation Yard Emergency Generator

Project Location - Specific: City of Rocklin, Department of Public Works Corporation Yard, 4081 Alvis Court, Rocklin, California, 95677, Accessor Parcel Number 045-012-001-000

Project Location - City: Rocklin, CA Project Location - County: Placer

Description of Nature, Purpose and Beneficiaries of Project: The proposed project includes the installation of one stationary emergency generator at the City of Rocklin, Department of Public Works Corporation Yard. The emergency generator would be used to maintain operations at the Corporation Yard if typical electrical service is interrupted. Activities performed at the Corporation Yard are necessary for maintaining essential services for public health and safety.

The proposed project includes the installation of an exterior-located, skid-mounted, 275-kilowatt diesel engine driven generator with a 297-gallon fuel tank, construction of an approximate 20 feet by 6.5 feet reinforced concrete pad with bollards, installation of an automatic transfer bypass switch, and modifications required to tie into the existing electrical system, including trenching, backfilling, conduits, wiring and associated fixtures. The diesel engine driven generator is located within a weather protected and sound attenuated enclosure. Ground disturbance associated with this proposed project will occur in non-native soil that was previously disturbed during construction of the original Corporation Yard.

Name of Public Agency Approving Project: City of Rocklin

Name of Person or Agency Carrying Out Project: City of Rocklin

Exempt Status (Check one)

☒ Categorical Exemption (California Code of Regulations, Title 14, Division 6, Chapter 3, California Environmental Quality Act [CEQA] Guidelines, Section 15301, Class 1 – Existing Facilities and Section 15303, Class 3 – New Construction or Conversion of Small Structures)

Reasons why the project is exempt: Activities under this proposed project include the operation and minor alteration of existing public structures, facilities, and mechanical equipment, involving negligible or no expansion of existing or former use, are categorically exempt under CEQA Guidelines, Section 15301 (Class 1 – Existing Facilities). Activities under this proposed project also include the construction and location of a limited number of new,

small facilities or structures; installation of small new equipment and facilities in small structures; and the conversion of existing small structures from one use to another where only minor modifications are made in the exterior of the structure, are categorically exempt under CEQA Guidelines, Section 15303 (Class 3 – New Construction or Conversion of Small Structures). The diesel engine driven generator is intended to temporary replace traditional the electrical service if or when it becomes unavailable during an electrical power outage, except for periodic testing, and does not expand use of the Corporation Yard. The diesel engine driven generator is accessory (appurtenant) and incidental to the overall purpose of the Corporation Yard. There are no unusual circumstances that would result in a reasonable possibility of a significant effect on the environment and no further environmental review is required.

Contact Person: Justin Nartker, Public Works Director, City of Rocklin, Public Works Department, 4081 Alvis Court, Rocklin, CA, 95677, (916) 625-5500

Signature: _____ Date: _____

Justin Nartker, Public Works Director

RESOLUTION NO. 2025-

RESOLUTION OF THE CITY COUNCIL OF THE CITY OF ROCKLIN AWARDING THE CONTRACT FOR THE CORPORATION YARD EMERGENCY GENERATOR TO JAMES DAY CONSTRUCTION, INC., AND AUTHORIZING THE CITY MANAGER TO EXECUTE AN AGREEMENT WITH JAMES DAY CONSTRUCTION INC.

WHEREAS, The Corporation Yard Emergency Generator consists of installing a 275 kW emergency generator at the City of Rocklin Corporation Yard; and

WHEREAS, the invitation for bids was advertised on September 20, 2024, and September 27, 2024, with the bid opening Wednesday, October 16, 2024, and bids were thereafter examined and found to be in compliance with all applicable specifications; and

WHEREAS, the lowest responsible bid was determined to be $212,602.00, submitted by James Day Construction, Inc. and staff recommends that the contract for the project be awarded to James Day Construction, Inc.; and

WHEREAS, pursuant to the Rocklin Municipal Code, section 3.04.050, a contingency amount of fifteen (15) percent of the contract $31,890.30, is automatically authorized for all public works project contracts awarded by the City Council or the City Manager, as long as adequate funds have been appropriated, bringing the total authorized project amount to $244,492.30; and

WHEREAS, funding for this project was set aside under the General Fund (100).

NOW, THEREFORE, the City Council of the City of Rocklin does resolve as follows:

Section 1. The contract for the Corporation Yard Emergency Generator is awarded to James Day Construction, Inc. and the City Manager is authorized to execute the Agreement with James Day Construction, Inc. in substantially the form attached hereto as Exhibit “A.”

PASSED AND ADOPTED this 25th day of February, 2025, by the following vote:

AYES: Councilmembers:
NOES: Councilmembers:
ABSENT: Councilmembers:
ABSTAIN: Councilmembers:

_____
Jill Gayaldo, Mayor

ATTEST:

_____
Avinta Singh, City Clerk

EXHIBIT A

CONSTRUCTION AGREEMENT

THIS AGREEMENT, dated for identification as of November 12, 2024, is between the **CITY OF ROCKLIN**, a municipal corporation, (hereinafter called "City"), and **James Day Construction, Inc.,** a corporation (hereinafter called "Contractor").

The parties hereto mutually agree to the terms and condition set forth herein.

I. CONTRACT DOCUMENTS

A. The Contract Documents referred to herein are incorporated herein by reference as if set forth in full in this Agreement.

B. Work called for in any one Contract Document and not mentioned in another is to be performed and executed as if mentioned in all Contract Documents. The table of contents, titles and headings contained herein and in said documents are solely to facilitate reference to various provisions of the Contract Documents and in no way affect or limit the interpretations of the provisions to which they refer.

C. The Contract Documents shall include the Notice to Contractors, Addenda, Bid Form, Agreement, Plans, General Provisions, Special Provisions, General Requirements (Division 1), Technical Specifications (Divisions 2 through 16), Permits from other agencies as may be required by law, City of Rocklin Construction Specifications, Improvement Standards and Standard Drawings, Caltrans Standard Plans and Specifications as applicable, Standard Forms, Supplemental Drawings, all required bonds, Exhibits, the Contract Schedule, Storm Water Pollution Prevention Plan (whether prepared by the City or the Contractor) and any and all supplemental agreements amending or extending the Work contemplated and which may be required to complete the Work in an acceptable manner. Supplemental agreements are written agreements covering alterations, amendments or extensions to the Contract Documents and include Change Orders, Construction Change Directives, Field Directives, Field Orders and Supplemental Drawings.

D. The General Provisions shall mean and refer to the current General Provisions of the City of Rocklin, which are incorporated herein by this reference as if set forth herein.

II. DEFINITIONS

Unless otherwise specifically provided herein, all works and phrases defined in the General Provisions shall have the same meaning and intent in this Agreement.

III. AGREEMENT CONTROLS

In the event of a conflict between the terms and conditions as set forth in this Agreement and the terms and conditions set forth in other Contract Documents, the terms and conditions set forth in this Agreement shall prevail.

IV. SCOPE OF CONTRACT

Contractor agrees to furnish all tools, equipment, apparatus, facilities, labor and material and transportation necessary to perform and complete in a good and workman like manner to the satisfaction of City, all the work required for the Contract for the Project entitled: Corporation Yard Emergency Generator

V. CONTRACT AMOUNT AND PAYMENTS

City agrees to pay and Contractor agrees to accept, in full payment for the above work, **Two Hundred Twelve Thousand, Six Hundred Two DOLLARS ($212,602.00)** as the stipulated sum price which Contractor bid in its Bid Form, subject to additions and deductions by Change Order(s) as provided in the General Conditions.

IIII. PROGRESS AND FINAL PAYMENTS

Progress and final payments shall be in accordance with the General Provisions.

IVII. RETENTION OF SUMS CHARGED AGAINST CONTRACTOR

When, under the provisions of this contract, City shall charge any sum of money against Contractor, City shall deduct and retain the amount of such charge from the amount of the next succeeding

progress estimate, or from any other moneys due or that may become due to the Contractor from City. If, on completion or termination of the Contract, sums due contractor are insufficient to pay City's charges against him, City shall have the right to recover the balance from Contractor or his sureties.

VII. TIME OF COMPLETION

A. The entire Work shall be brought to completion in the manner and within the time period provided for in the Contract Documents, commencing on the date of issuance of the Notice to Proceed.

B. Failure to complete the Work by the completion date and in the manner provided for by the Contract Documents shall subject Contractor to liquidated damages as hereinafter provided in this Agreement. Time is of the essence in these Contract Documents.

IX. INSURANCE

Contractor shall maintain in full force and effect at all times during the term of the Agreement, at its sole expense, policies of insurance in accordance with the General Provisions.

X. NO WAIVER OF REMEDIES

A. Neither the inspection by City or its agents, nor any order or certificate for the payment of money, nor any payment for, nor acceptance of the whole or any part of the Work by City, nor any extensions of time, nor any position taken by City or its agents shall operate as a waiver of any provision of this Agreement or of any power herein reserved to City or any right to damages herein provided, nor shall any waiver of any breach of the Agreement be held to be a waiver of any other or subsequent breach.

B. All remedies provided in this Agreement shall be taken and construed as cumulative; that is, in addition to each and every other remedy herein provided, and City shall have any and all equitable and legal remedies which it would in any case have.

XI. DETERMINATION OF DAMAGES

A. The actual fact of the occurrences of damages and the actual amount of the damages which City would suffer if the Work were not completed within the specified times set forth are dependent upon many circumstances and conditions which could prevail in various combinations, and, from the nature of the case, it is impracticable and extremely difficult to fix the actual damages.

B. Damages which City would suffer in the event of delay include loss of the use of the Project, and, in addition, expenses of prolonged employment of an architectural and engineering staff; costs of administration, inspection, and supervision; and the loss suffered by the public within the City of Rocklin by reasons of the delay in the completion of the Project to serve the public at the earliest possible time.

C. Accordingly, the parties hereto agree, and by execution of this Agreement, Contractor acknowledges that it understands, has ascertained and agrees, that the amounts set forth herein as liquidated damages shall be presumed to be that amount of damages sustained by the failure of Contractor to complete the entire work within the times specified.

XII. LIQUIDATED DAMAGES

A. The amount of the liquidated damages to be paid by Contractor to City for failure to complete the entire work in the specified number of Working or Calendar Days (as extended, if applicable) will be **Five Hundred Dollars ($500.00)** for each **Calendar day**, continuing to the time at which the Work is completed.

B. Such amount is the actual cash value agreed upon as the loss to City resulting from Contractor's delay.

VIIII. TERMINATION AFTER ALLOTTED WORKING OR CALENDAR DAYS

A. In addition to any rights it may have, City may terminate this Contract or the Contractor’s right to proceed at any time after the allotted number of Working or Calendar Days as adjusted by any extensions of time for excusable delays that may have been granted.

B. Upon such termination Contractor any compensation shall be in accordance with Section 5.23 of

the General Provisions, and it shall be liable to City for liquidated damages for all periods of time beyond such termination date until the Work is completed.

XIV. CONTRACTOR BANKRUPT

A. If Contractor should commence any proceeding under the Bankruptcy Act, or if contractor be adjudged a bankrupt, or if Contractor should make any assignment for the benefit of creditors, or if a receiver should be appointed on account of Contractor's insolvency, then the City Council may, without prejudice to any other right or remedy, terminate the Contract and complete the work by giving notice to Contractor and his surety according to the provisions of Article 5 of the General Provisions.

B. City shall have the right to complete, or cause completion of the work, all as specified in the General Provisions of the General Provisions.

XV.PERFORMANCE AND PAYMENT BONDS

A. The Contractor shall, before beginning said work, file two bonds with the City, each made payable to the City. These bonds shall be issued by a Surety Company authorized to do business in the State of California, and shall be maintained during the entire life of the Contract at the expense of the Contractor.

1. One bond shall be in the amount of one hundred percent (100%) of the Contract and shall guarantee the Faithful Performance of the Contract.
2. The second bond shall be the Payment Bond required by Part 4, Title 15, Chapter 7, Division Three of the Civil Code of the State of California and shall be in the amount of one hundred percent (100%) of the Contract.

B. Any alteration or alterations made in any provision of this Contract shall not operate to release any surety from liability on any bond required hereunder and the consent to make such alterations is hereby given, and any surety on said bonds hereby waives the provisions of Section 2819 of the Civil Code.

C. Bonds shall only be accepted from an *"Admitted surety insurer"*, which means an insurer to which the Insurance Commissioner has issued a certificate of authority to transact surety insurance in this state. ***Contractor must submit all of the following with the bonds***:

- The original, or a certified copy, of the unrevoked appointment, power of attorney, bylaws or other instrument entitling or authorizing the person who executed the bond to do so.

XVI. SUBSTITUTION OF SECURITIES OF MONEY WITHHELD

A. At any time prior to final payment, Contractor may request substitution of securities for any money withheld by the City to ensure performance of the Contract.

B. At the expense of the Contractor, securities equivalent to the money withheld may be deposited with the City or with an approved financial institution as escrow agent according to a separate Security Agreement.

C. Securities eligible for substitution shall include those listed in Section 16430 of the Government Code or bank or savings and loan certificates of deposit. A fee set by the City Council shall be charged for such substitution.

XVII. LABOR CODE COMPLIANCE

A. City affirmatively identifies this project as a "public work" as that term is defined by Labor Code section 1720, and the project is, therefore, subject to prevailing wages under Labor Code section 1771.

B. Contractor and its subcontractors shall fully comply with all the provisions of the California Labor Code governing the performance of public works contracts including, but not limited to, <u>payment of prevailing wages</u>, limitations on time worked, compliance with apprentice requirements, maintenance of payroll records, <u>posting of wages at job site</u> and prohibitions against discrimination.

XVIII. UNFAIR COMPETITION

A. The following provision is included in this agreement pursuant to California Public Contract Code §7103.5.

"In entering into a public works contract or a subcontract to supply goods, services, or materials pursuant to a public works contract, the contractor or subcontractor offers and agrees to assigning to the awarding body all rights, title, and interest in and to all causes of action it may have under Section 4 of the Clayton Act (15 U.S.C. Sec. 15) or under the Cartwright Act (Chapter 2 (commencing with Section 16700) of Part 2 of Division 7 of the Business and Professions Code), arising from purchases of goods, services, or materials pursuant to the public works contract or the subcontract. This assignment shall be made and become effective at the time the awarding body tenders final payment to the contractor, without further acknowledgment by the parties."

XIX. ASSIGNMENT

Neither this Agreement nor any rights herein of Contractor shall be assigned without the written consent of City first obtained.

XIX. NO THIRD PARTY BENEFICIARIES

This Agreement is entered into solely between the City and Contractor. There are no third party beneficiaries, intended, unintended, or otherwise to this Agreement.

/////SIGNATURE PAGE FOLLOWS/////

IN WITNESS WHEREOF, the parties hereto have signed the Agreement on the date set forth opposite their names.

CONTRACTOR:

(California Corporations: must be signed by company's CEO, President, or Vice President *as well as* the Secretary or CFO.)

Date	Tax I.D. Number
Signature	Signature
Print Name	Print Name
Title	Title

CITY OF ROCKLIN, A Municipal Corporation:

Aly Zimmermann, City Manager

APPROVED AS TO FORM:

Matthew McOmber, City Attorney

ATTEST:

Avinta Singh, City Clerk

CITY OF ROCKLIN
SEALED BID

(MUST BE SIGNED BY BIDDER)

Sealed Bids will be received not later than Time 1:00 p.m. on Tuesday, October 16, 2024, at the office of the City Clerk, 3970 Rocklin Road, Rocklin, Rocklin California and opened at 1:00 p.m., or as soon thereafter as business allows.

TO THE HONORABLE CITY COUNCIL:
The undersigned hereby proposes and agrees to furnish any and all required labor, material, equipment transportation, and services for

Corporation Yard Emergency Generator

in the City of Rocklin, County of Placer, California.

The work is to be done in strict conformity with the Contract Documents, at the following Lump Sum Prices:

Total Lump Sum for the Corporation Yard Emergency Generator shall be (spell out) TWO HUNDRED AND FIVE THOUSAND Dollars ($ 205,000.00).

Total Project Bid Amount shall be (Spell Out) TWO HUNDRED AND FIVE THOUSAND ($ 205,000.00).

If awarded the Contract, the undersigned shall execute said Contract and furnish the necessary Performance and Payment Bonds and insurance within ten (10) calendar days after the Notice of Award of said Contract and begin work as set forth in the written Notice to Proceed from the City of Rocklin (hereinafter referred to as the "City") to Contractor.

In determining the amount bid by each bidder, the City shall disregard mathematical errors in addition, subtraction, multiplication, and division that appear obvious on the face of the Bid. When such a mathematical error appears on the Bid, the City shall have the right to correct such error and to compute the total amount bid by said bidder on the basis of the corrected figure or figures.

When an item price is required to be set forth in the Bid, and the total for the item set forth separately does not agree with a figure which is derived by multiplying the item price times the Engineer's estimate of the quantity of work to be performed for said item, the item price shall prevail over the sum set forth as the total for the item unless, in the sole discretion of the City, such a procedure would be inconsistent with the policy of the bidding procedure. The total paid for each such item of work shall be based upon the item price and not the total price. Should the Bid contain only a total price for the item and the item price is omitted, the City shall determine the item price by dividing the total price for the item by Engineer's estimate of the estimated quantities of work to be performed as items of work.

If the Bid contains neither the item price nor the total price for the item, then it shall be deemed incomplete and the Bid shall be disregarded.

NAME OF BIDDER:

UNWIRED BB LLC

Affix Corporate Seal Here

BY: _____
Signature

SCOTT SMITH
Type/Print Name

SR OPERATIONS MANAGER
Title

DATE: 10 · 15 · 24

Valid Contractor's License No.: 1054081

Expiration date: 7/31/26

Public Works Registration No. PW-LR-1001075588

It is understood that this Bid is based upon completion of the work to within a period of calendar days commencing on the day the Notice to Proceed is issued.

The undersigned represents and warrants that the undersigned has examined the location of the proposed work and is familiar with the local conditions at the place where the work is to be done, and the undersigned has reviewed and understands the plans, specifications and other Contract Documents, and the undersigned is satisfied with all conditions for the performance of the work.

The undersigned has checked carefully all of the above figures and understands that the City of Rocklin will not be responsible for any errors or omissions on the part of the undersigned in making up this Bid.

The Contractor shall initial below that it has received the appropriate addenda and has incorporated the addenda into its Bid.

Addenda Received and Acknowledged
No. 1 SS
No. 2 SS
No. 3 SS

BID DEPOSIT ENCLOSED IN THE FOLLOWING FORM:

$ 25,000.00 not less than ten percent (10%) of amount Bid, plus additive alternates.

- ☐ CERTIFIED CHECK
- ☐ MONEY ORDER
- ☐ CASHIER'S CHECK
- ☒ BID BOND

AGREEMENT

It is understood and agreed that if written notice of the City's acceptance of this Bid is mailed, emailed, or delivered to the undersigned Bidder after the opening of the bid, and within the time set in the Notice to Contractors or at any time thereafter before this Bid is withdrawn, the undersigned Bidder will execute and deliver to the City the Agreement for Construction in accordance with the Bid as accepted, within ten (10) days after receipt of notification of award, and that the Work under the Contract shall be commenced by the undersigned Bidder, if awarded the Contract, on the date to be stated in a Notice to Proceed and shall be completed in the time specified in the Contract Documents. In the event the Bidder to whom an award is made fails or refuses to execute the Agreement for Construction within ten (10) days from the date of receiving notification that it is the Bidder to whom the Contract is awarded, the City may declare the Bidder's bid deposit or bond forfeited as damages caused by the failure of the Bidder to enter into the Agreement for Construction.

The undersigned Bidder agrees that the information and representations provided herein are made under penalty of perjury.

ATTACHMENT A

BID BOND
City of Rocklin

We, UNWIRED BB LLC, as principal, and THE GRAY CASVALTY & SURETY CO as Surety are held and firmly bound unto the City of Rocklin, hereafter referred to as "Obligee", in the penal sum of ten percent (10%) of the total amount of the Bid of the Principal submitted to the Obligee for the Work described below, for the payment of which sum we hold and firmly bind ourselves, our heirs, executors, administrators, successors and assigns, jointly and severally,

THE CONDITION OF THIS OBLIGATION IS SUCH, THAT:
WHEREAS, the Principal is submitting a Bid to the Obligee, for

CORPORATION YARD EMERGENCY GENERATOR IN ROCKLIN
(Copy here the exact description of work, including location, as it appears on the Bid)

for which Bids are to be opened at Rocklin, CA on 10 · 16 · 24
(Insert date of Bid opening)

NOW, THEREFORE, if the Principal is awarded the Contract and after the prescribed forms are presented to him for signature, enters into a written contract, in the prescribed form, in accordance with the Bid, and files two bonds with the Obligee, one to guarantee faithful performance of the contract and the other to guarantee payment for labor and materials as provided by law, then this obligation shall be null and void; otherwise, it shall remain in full force.

The Surety, for value received, hereby stipulates and agrees that no change, extension of time for award of a contract after opening of Bids, alteration, addition, modification, or supplement to the terms of the Notice to Contractors/Invitation for Bids, the Work to be performed thereunder, or the Contract Documents, shall in any way affect the Surety's obligations under this Bond, and the Surety does hereby waive notice of any such change, extension of time, alteration, addition, modification or supplement to the terms of said Notice to Contractors/Invitation for Bids, the Work to be performed thereunder, or the Contract Documents.

In the event suit is brought upon this bond by the Obligee and judgment is recovered, the Surety shall pay all costs incurred by the Obligee in such suit, including reasonable attorneys' fees to be fixed by the court.

Dated: 10 · 15, 2024

Principal: UNWIRED BB LLC

By: SCOTT SMITH

Surety: THE GRAY CASVALTY & SURETY COMPANY
Address: 1625 W CAUSEWAY APPROACH MANDEVILLE, LA 70471
Telephone: (504) 780 · 7440
Attorney in Fact: STEVE SHIKE

(Attach Attorney-In-Fact Certificate, Corporate Seal and Surety Seal)

NOTICE:

A CERTIFICATE OF ACKNOWLEDGMENT IN ACCORDANCE WITH THE PROVISIONS OF CIVIL CODE SECTION 1189 MUST BE ATTACHED FOR EACH PERSON EXECUTING THIS AGREEMENT ON BEHALF OF BIDDER AND SURETY.

ATTACHMENT F

CERTIFICATE OF AUTHORIZATION
(If Bidder is a Corporation or a Limited Liability Corporation)

STATE OF CALIFORNIA
COUNTY OF Fresno

I HEREBY CERTIFY that at a meeting of the Board of Directors of the unWired Broaband, LLC, a corporation existing under the laws of the State of California, held on October 15, 2024, ____, the following resolution was duly passed and adopted:

> "RESOLVED, that Jon Majors, as agent of the Corporation, be and is hereby authorized to execute the Bid dated October 18th, 2024, to the City of Rocklin and this Corporation and that his/her execution thereof, attested by the Secretary of the Corporation, and with the Corporate seal fixed, shall be the official act and deed of this Corporation."

I further Certify that said resolution is now in full force and effect.
IN WITNESS WHEREOF, I have hereunto set my hand and affixed the official seal of the Corporation this 16th day of October, 2024.

Secretary

J. Matthew Firra
Corporate Officer

(seal)
NOTE: unWired Broadband, LLC does not have a corporate seal

215 W. Fallbrook Avenue, Suite 101, Fresno, CA 93711
Corporate Address

DOCUMENT 00 43 13

BID BOND

(Note: If Bidder is providing a bid bond as its bid security, Bidder must use this form, NOT a surety company form.)

KNOW ALL PERSONS BY THESE PRESENTS:

That the undersigned, as unWired Broadband LLC as Principal ("Principal"), and

The Gray Casualty & Surety Company as Surety ("Surety"),

a corporation organized and existing under and by virtue of the laws of the State of LA and authorized to do business as a surety in the State of California, are held and firmly bound unto the Rocklin Corporation yard Emergency generator in Rocklin, State of California as Obligee, in the sum of Twenty-five thousand and 00/100 (10% of project bid) ($ 25,000.00)

lawful money of the United States of America, for the payment of which sum well and truly to be made, we, and each of us, bind ourselves, our heirs, executors, administrators, successors, and assigns, jointly and severally, firmly by these presents.

THE CONDITION OF THIS OBLIGATION IS SUCH that whereas the Principal has submitted a bid to the District for all Work specifically described in the accompanying bid;

now, therefore, if the Principal is awarded the Contract and, within the time and manner required under the Contract Documents, after the prescribed forms are presented to Principal for signature, enters into a written contract, in the prescribed form in accordance with the bid, and files two bonds, one guaranteeing faithful performance and the other guaranteeing payment for labor and materials as required by law, and meets all other conditions to the contract between the Principal and the Obligee becoming effective, or if the Principal shall fully reimburse and save harmless the Obligee from any damage sustained by the Obligee through failure of the Principal to enter into the written contract and to file the required performance and labor and material bonds, and to meet all other conditions to the Contract between the Principal and the Obligee becoming effective, then this obligation shall be null and void; otherwise, it shall be and remain in full force and effect. The full payment of the sum stated above shall be due immediately if Principal fails to execute the Contract within fourteen (14) days of the date of the District's Notice of Award to Principal.

Surety, for value received, hereby stipulates and agrees that no change, extension of time, alteration or addition to the terms of the Contract or the call for bids, or to the work to be performed there under, or the specifications accompanying the same, shall in any way affect its obligation under this bond, and it does hereby waive notice of any such change, extension of time, alteration or addition to the terms of the Contract or the call for bids, or to the work, or to the specifications.

In the event suit is brought upon this bond by the Obligee and judgment is recovered, the Surety shall pay all costs incurred by the Obligee in such suit, including a reasonable attorneys' fee to be fixed by the Court.

If the District awards the bid, the security of unsuccessful bidder(s) shall be returned within sixty (60) days from the time the award is made. Unless otherwise required by law, no bidder may withdraw its bid for ninety (90) days after the date of the bid opening.
IN WITNESS WHEREOF, this instrument has been duty executed by the Principal and Surety above

named, on the 26th day of September, 20 24.

(Affix Corporate Seal)

unWired Broadband LLC
Principal

By

(Affix Corporate Seal)

The Gray Casualty & Surety Company
Surety

By Steve Shike, Attorney-in-Fact

N/A
Name of California Agent of Surety

N/A
Address of California Agent of Surety

N/A
Telephone Number of California Agent of Surety

Bidder must attach Power of Attorney and Certificate of Authority for Surety and a Notarial Acknowledgment for all Surety's signatures. The California Department of Insurance must authorize the Surety to be an admitted Surety Insurer.

THE GRAY INSURANCE COMPANY
THE GRAY CASUALTY & SURETY COMPANY

GENERAL POWER OF ATTORNEY

Bond Number: N/A **Principal:** unWired Broadband LLC

KNOW ALL BY THESE PRESENTS, THAT The Gray Insurance Company and The Gray Casualty & Surety Company, corporations duly organized and existing under the laws of Louisiana, and having their principal offices in Metairie, Louisiana, do hereby make, constitute, and appoint: **Jason Valle and Steve Shike of Salem, Oregon jointly and severally** on behalf of each of the Companies named above its true and lawful Attorney(s)-in-Fact, to make, execute, seal and deliver, for and on its behalf and as its deed, bonds, or other writings obligatory in the nature of a bond, as surety, contracts of suretyship as are or may be required or permitted by law, regulation, contract or otherwise, provided that no bond or undertaking or contract of suretyship executed under this authority shall exceed the amount of $25,000,000.00.

This Power of Attorney is granted and is signed by facsimile under and by the authority of the following Resolutions adopted by the Boards of Directors of both The Gray Insurance Company and The Gray Casualty & Surety Company at meetings duly called and held on the 26th day of June, 2003.

"RESOLVED, that the President, Executive Vice President, any Vice President, or the Secretary be and each or any of them hereby is authorized to execute a power of Attorney qualifying the attorney named in the given Power of Attorney to execute on behalf of the Company bonds, undertakings, and all contracts of surety, and that each or any of them is hereby authorized to attest to the execution of such Power of Attorney, and to attach the seal of the Company; and it is

FURTHER RESOLVED, that the signature of such officers and the seal of the Company may be affixed to any such Power of Attorney or to any certificate relating thereto by facsimile, and any such Power of Attorney or certificate bearing such facsimile signature or facsimile seal shall be binding upon the Company now and in the future when so affixed with regard to any bond, undertaking or contract of surety to which it is attached.

IN WITNESS WHEREOF, The Gray Insurance Company and The Gray Casualty & Surety Company have caused their official seals to be hereinto affixed, and these presents to be signed by their authorized officers this 4th day of November, 2022.

THE GRAY INSURANCE COMPANY SEAL

By: Michael T. Gray
President
The Gray Insurance Company

Cullen S. Piske
President
The Gray Casualty & Surety Company

THE GRAY CASUALTY & SURETY COMPANY SEAL

State of Louisiana
ss:
Parish of Jefferson

On this 4th day of November, 2022, before me, a Notary Public, personally appeared Michael T. Gray, President of The Gray Insurance Company, and Cullen S. Piske, President of The Gray Casualty & Surety Company, personally known to me, being duly sworn, acknowledged that they signed the above Power of Attorney and affixed the seals of the companies as officers of, and acknowledged said instrument to be the voluntary act and deed, of their companies.

Leigh Anne Henican
Notary Public
Notary ID No. 92653
Orleans Parish, Louisiana

Leigh Anne Henican
Notary Public, Parish of Orleans State of Louisiana
My Commission is for Life

I, Mark S. Manguno, Secretary of The Gray Insurance Company, do hereby certify that the above and forgoing is a true and correct copy of a Power of Attorney given by the companies, which is still in full force and effect. IN WITNESS WHEREOF, I have set my hand and affixed the seals of the Company this 26th day of September, 2024.

I, Leigh Anne Henican, Secretary of The Gray Casualty & Surety Company, do hereby certify that the above and forgoing is a true and correct copy of a Power of Attorney given by the companies, which is still in full force and effect. IN WITNESS WHEREOF, I have set my hand and affixed the seals of the Company this 26th day of September, 2024.

THE GRAY INSURANCE COMPANY SEAL

THE GRAY CASUALTY & SURETY COMPANY SEAL

ACKNOWLEDGMENT

State of Oregon
County of Marion

On 09/26/2024 before me, Victoria Elizabeth Hatefi, Notary Public,
(here insert name and title of the officer)

personally appeared Steve Shike, Attorney-In-Fact,

personally known to me to be the person whose name is subscribed to the within instrument and acknowledged to me that he executed the same in his authorized capacity, and that by his signature on the instrument the person, or the entity upon behalf of which the person acted, executed the instrument.

WITNESS my hand and official seal.

Signature Victoria Hatefi

OFFICIAL STAMP
VICTORIA ELIZABETH HATEFI
NOTARY PUBLIC - OREGON
COMMISSION NO. 1009301
MY COMMISSION EXPIRES MARCH 02, 2025

(Seal)

ATTACHMENT B

SUBCONTRACTOR LISTING FORM

LIST OF SUBCONTRACTORS FOR UNWIRED BB LLC
(BIDDER)

PROJECT: CORPORATION YARD EMERGENCY GENERATOR

Pursuant to the provisions of Sections 4100 to 4114 inclusive, of the California Public Contract Code, and as set forth in Instructions to Bidders, and the General Conditions, the above named Contractor hereby designates below the names, contractor license numbers, and locations of the place of business of each Subcontractor. Please check one of the boxes and sign below:

X We are not using any Subcontractors.

____ All of our Subcontractors are performing at least 1/2 of 1% of the Work listed below, including for additive Alternates, if any.

WORK TO BE PERFORMED	NAME & BUSINESS ADDRESS OF SUBCONTRACTOR	LICENSE NUMBER	DIR #

Signed

Bidders shall provide the registration numbers for all listed Subcontractors within 24 hours of bid opening and registration numbers of all Subcontractors who are not required to be listed not later than 24 hours before they are to start work on the Project.

ATTACHMENT C

NONCOLLUSION AFFIDAVIT

STATE OF CALIFORNIA
COUNTY OF Fresno

Scott Smith, being first duly sworn, deposes and says that he or she is SR Operations Manager [Title] of UWIRED BB LLC, the party making the foregoing Bid, that the Bid is not made in the interest of, or on behalf of, any undisclosed person, partnership, company, association, organization, or corporation; that the Bid is genuine and not collusive or sham; that Bidder has not directly or indirectly induced or solicited any other Bidder to put in a false or sham Bid, and has not directly or indirectly colluded, conspired, connived, or agreed with any Bidder or anyone else to put in a sham bid or to refrain from bidding; that Bidder has not in any manner, directly or indirectly, sought by agreement, communication, or conference with anyone to fix the price Bid of Bidder or any other Bidder, or to fix any overhead, profit, or cost element of the price Bid, or of that of any other Bidder. All statements contained in the Bid are true. Bidder has not, directly or indirectly, submitted its price Bid or any breakdown thereof, or the contents thereof, or divulged information or data relative thereto, to any corporation, partnership, company association, organization, bid depository, or to any member or agent thereof to effectuate a collusive or sham Bid, and has not paid, and will not pay, any person or entity for such purpose.

Any person executing this declaration on behalf of a Bidder that is a corporation, partnership, joint venture, limited liability company, limited liability partnership, or any other entity, hereby represents that he or she has full power to execute, and does execute, this declaration on behalf of the Bidder.

Signed: _____

Title: SR Operations Manager

A notary public or other officer completing this certificate verifies only the identity of the individual who signed the document to which this certificate is attached, and not the truthfulness, accuracy, or validity of that document.

Subscribed and sworn to before me this

15th day of October, 2024

by Scott Smith

proved to me on the basis of satisfactory evidence to be the person(s) who appeared before me.

CARLEEN K. FONDREN
NOTARY PUBLIC - CALIFORNIA
COMMISSION # 2447154
FRESNO COUNTY
My Comm. Exp. May 24, 2027

(seal)

Signature

ATTACHMENT D

CERTIFICATION REGARDING DEBARMENT, SUSPENSION, PROPOSED DEBARMENT OR SUSPENSION

Bidder hereby certifies, to the best of its knowledge and belief, except as expressly disclosed on this Certificate, that:

The Bidder and/or any of its Principals:

1. Are not presently debarred, suspended, proposed for debarment or suspension, or declared ineligible for award of the contract by any Federal, State, or local agency.

2. Have not, within a three-year period preceding this Bid, been convicted of or had a civil judgment rendered against them for: commission of fraud or a criminal offense in connection with obtaining, attempting to obtain, or performing a public (Federal, State or local) contract or subcontract; violation of Federal or State antitrust statutes relating to the submission of offers; or commission of embezzlement, theft, forgery, bribery, falsification or destruction of records, making false statements, tax evasion, or receiving stolen property.

3. Are not presently indicted for, or otherwise criminally or civilly charged by a government entity with, commission of any of the offenses enumerated in Item 2. above.

4. The Bidder has not, within a three-year period preceding this offer, had one or more contracts terminated for default by any Federal, State, or local agency.

"Principals," for the purposes of this certification, means: officers; directors; owners; partners; and, persons having primary management or supervisory responsibilities within a business entity (e.g., general manager; plant manager; head of a subsidiary, division, or business segment, and similar positions).

Bidder shall provide immediate written notice to the City if, at any time prior to contract award, Bidder learns that its certification was erroneous when submitted or has become erroneous by reason of changed circumstances.

This Certification is a material representation of fact upon which reliance will be placed when making the award, if and when made. If it is later determined that Bidder knowingly rendered an erroneous certification, in addition to other remedies available to the City, the City may terminate the Contract resulting from this solicitation for default.

BIDDER: UNWIRED BB LLC Date 10-15-24

BY: _____
Signature

SCOTT SMITH
Type/Print Name

SR OPERATIONS MANAGER
Title

EXCEPTIONS TO CERTIFICATION

If Bidder has any exceptions to the Certification set forth above, state the exception and an explanation of the circumstances:

N/A

BIDDER: UNWIRED BB LLC Date 10.15.24

BY: [signature]
Signature

SCOTT SMITH
Type/Print Name

SR OPERATIONS MANAGER
Title

ATTACHMENT E

RESOLUTION OF DISPUTES REGARDING THE BIDDING PROCESS

The lack of a prompt procedure to resolve disputes regarding the bidding process would impair the City's ability to carry out its purpose of constructing this project in a timely manner. Therefore, to the maximum extent authorized by law and notwithstanding any other procedures specified in documents referenced herein, all disputes and/or protests regarding the bidding process shall be subject to the following procedure. In submitting a Bid to the City for this project, the Bidder agrees to comply with and to be bound by this procedure.

1. If the Bidder believes that any provision in the solicitation for Bids is vague, ambiguous, conflicting or contrary to law, then the Bidder shall promptly bring its concern to the City by written notice specifying the provision(s) in question and the factual and legal bases for concern. Failure of the Bidder to raise any concern relating to a solicitation requirement within at least two (2) working days prior to the Bid due date will be deemed a waiver of the Bidder's right to protest based on alleged vague, ambiguous, conflicting or unlawful requirements in the solicitation.

2. Within five (5) calendar days after the opening of Bids, Bidder shall provide a written notice to the City of any and all mistakes regarding the Bid for which a Bidder requests relief. The City shall not consider any requests for relief due to mistake if notice is not received within the time requirements of Public Contract Code section 5100, *et seq.*, Relief of Bidders.

3. No later than five (5) calendar days after Bids are opened, the Bidder must submit in writing to the City an explanation of all legal and factual grounds for any protest. These requirements are to be strictly construed. Untimely protests and/or grounds not set forth in the protest will not be considered. Failure to timely protest or otherwise comply with the protest requirements will constitute a waiver of the right to challenge and forever bar the Bidder from challenging, whether before the City or any administrative or judicial tribunal, any particular Bid(s), the bidding process, or the Contract award on any ground not set forth in the protest. Upon receipt of a protest, the City will provide a copy to any Bidder whose Bid is challenged in the protest.

4. If a timely written protest is provided to the City at least two (2) business days before any City Council meeting at which the award of the Contract will be considered, then the City shall make reasonable efforts to provide the protesting Bidder with a written response to the protest prior to the City Council meeting. A copy of any City response will be provided to any other Bidder responding to the protest.

5. Notice of the date and time of the City Council meeting at which the award of the Contract for the Project shall be considered will be posted on the City's website.

6. Any Bidder complying with the above procedure may bring an action within sixty (60) days from the action of the City Council, in accordance with Sections 860 and 863 of the California Code of Civil Procedure, to determine the validity of the City Council's action on the award of the contract. The City shall be a defendant and shall be served with the summons and complaint in the action in the manner provided by law for the service of a summons in a civil action. In any such action the summons shall be in

the form prescribed in Section 861.1 of the California Code of Civil Procedure except that in addition to being directed to "all persons interested in the matter of [specifying the matter]," it shall also be directed to the City. If the bidder bringing such action fails to complete the publication and such other notice as may be prescribed by the court in accordance with Section 863 of the California Code of Civil Procedure and to file proof thereof in the action within 60 days from the filing of his complaint, the action shall be dismissed on the motion of the City unless good cause for such failure is shown by the bidder.

UNWIRED BB LLC

Contractor

10.15.24

Date

Signature

ATTACHMENT F

CERTIFICATE OF AUTHORIZATION

(If Bidder is a Corporation or a Limited Liability Corporation)

STATE OF CALIFORNIA
COUNTY OF _____

I HEREBY CERTIFY that at a meeting of the Board of Directors of the _____ _____, a corporation existing under the laws of the State of California, held on _____, _____, the following resolution was duly passed and adopted:

> "RESOLVED, that _____, as _____ of the Corporation, be and is hereby authorized to execute the Bid dated _____, 20___, to the City of Rocklin and this Corporation and that his/her execution thereof, attested by the Secretary of the Corporation, and with the Corporate seal fixed, shall be the official act and deed of this Corporation."

I further Certify that said resolution is now in full force and effect.
IN WITNESS WHEREOF, I have hereunto set my hand and affixed the official seal of the Corporation this _____ day of _____, 20___.

_____
Secretary

_____
Corporate Officer

(seal)

_____
Corporate Address

ATTACHMENT G

[Projects of One Million Dollars ($1,000,000.00) or More

IRAN CONTRACTING ACT CERTIFICATION

Pursuant to California Public Contract Code (PCC) section 2204, an Iran Contracting Act certification is required for solicitations of goods or services of $1,000,000 or more.

To submit a bid to the City of Rocklin, you must complete **ONLY ONE** of the following two paragraphs. To complete paragraph 1, check the corresponding box **and** complete the certification for paragraph 1. To complete paragraph 2, simply check the corresponding box.

☒ 1. We are not on the current list of persons engaged in investment activities in Iran created by the California Department of General Services ("DGS") pursuant to PCC 2203(b), and we are not a financial institution extending twenty million dollars ($20,000,000) or more in credit to another person, for 45 days or more, if that other person will use the credit to provide goods or services in the energy sector in Iran and is identified on the current list of persons engaged in investment activities in Iran created by DGS.

OR

☐ 2. We have received written permission from the SLDMWA to submit a proposal pursuant to PCC 2203(c) or (d). *A copy of the written permission from the SLDMWA is included with our proposal.*

CERTIFICATION FOR PARAGRAPH 1:

I, the official named below, CERTIFY UNDER PENALTY OF PERJURY, that I am duly authorized to legally bind the Proposer to the clause in paragraph 1. This certification is made under the laws of the State of California.

BIDDER: UNWIRED BB LLC Date 10.15.21

BY: _____
Signature

SCOTT SMITH
Type/Print Name

SR OPERATIONS MANAGER
Title

Executed in the County of FRESNO, State of CALIFORNIA

CITY OF ROCKLIN
SEALED BID

(MUST BE SIGNED BY BIDDER)

Sealed Bids will be received not later than Time 1:00 p.m. on Tuesday, October 16, 2024, at the office of the City Clerk, 3970 Rocklin Road, Rocklin, Rocklin California and opened at 1:00 p.m., or as soon thereafter as business allows.

TO THE HONORABLE CITY COUNCIL:
The undersigned hereby proposes and agrees to furnish any and all required labor, material, equipment transportation, and services for

Corporation Yard Emergency Generator

in the City of Rocklin, County of Placer, California.

The work is to be done in strict conformity with the Contract Documents, at the following Lump Sum Prices:

Total Lump Sum for the Corporation Yard Emergency Generator shall be (spell out) TWO HUNDRED AND FIVE THOUSAND Dollars ($ 205,000.00).

Total Project Bid Amount shall be (Spell Out) TWO HUNDRED AND FIVE THOUSAND ($205,000.00).

If awarded the Contract, the undersigned shall execute said Contract and furnish the necessary Performance and Payment Bonds and insurance within ten (10) calendar days after the Notice of Award of said Contract and begin work as set forth in the written Notice to Proceed from the City of Rocklin (hereinafter referred to as the "City") to Contractor.

In determining the amount bid by each bidder, the City shall disregard mathematical errors in addition, subtraction, multiplication, and division that appear obvious on the face of the Bid. When such a mathematical error appears on the Bid, the City shall have the right to correct such error and to compute the total amount bid by said bidder on the basis of the corrected figure or figures.

When an item price is required to be set forth in the Bid, and the total for the item set forth separately does not agree with a figure which is derived by multiplying the item price times the Engineer's estimate of the quantity of work to be performed for said item, the item price shall prevail over the sum set forth as the total for the item unless, in the sole discretion of the City, such a procedure would be inconsistent with the policy of the bidding procedure. The total paid for each such item of work shall be based upon the item price and not the total price. Should the Bid contain only a total price for the item and the item price is omitted, the City shall determine the item price by dividing the total price for the item by Engineer's estimate of the estimated quantities of work to be performed as items of work.

If the Bid contains neither the item price nor the total price for the item, then it shall be deemed incomplete and the Bid shall be disregarded.

CITY OF ROCKLIN

STANDARD BID PACKAGE AND GENERAL PROVISIONS FOR THE CORPORATION YARD EMERGENCY GENERATOR

BID OPENING OCTOBER 16, 2024
1:00PM
3970 ROCKLIN ROAD
ROCKLIN, CA

PUBLIC WORKS DEPARTMENT
4081 ALVIS COURT
ROCKLIN, CA 95677

TABLE OF CONTENTS

Project Location Map

Notice to Contractors

Bid Documents

Attachments

DOCUMENTS THAT MUST BE SUMITTED WITH BID
BID FORM (With Addenda Acknowledgement)
BID BOND – ATTACHMENT A
SUBCONTRACTOR LISTING FORM – ATTACHMENT B
NONCOLLUSION AFFIDAVIT – ATTACHMENT C
CERTIFICATION REGARDING DEBARMENT, SUSPENSION, PROPOSED DEBARMENT OR SUSPENSION – ATTACHMENT D
RESOLUTION OF DISPUTES – ATTACHMENT E
CERTIFICATION OF AUTHORIZATION – ATTACHMENT F
IRAN CONTRACTING CERTIFICATION – ATTACHMENT G

DOCUMENTS THAT MUST BE SUBMITTED UPON AWARD
CONSTRUCTION AGREEMENT – ATTACHMENT H
PERFORMANCE BOND – ATTACHMENT I
PAYMENT BOND – ATTACHMENT J
WORKERS' COMPENSATION INSURANCE CERTIFICATION – ATTACHMENT K
OPTIONAL: ESCROW AGREEMENT FOR SECURITY DEPOSITS IN LIEU OF RETENTION – ATTACHMENT L

TO BE SUBMITTED AS PART OF CLOSE-OUT
GUARANTEE FORM – ATTACHMENT M

General Provisions

Specifications

Exhibit A

Rocklin Corporation Yard
045-390-005-000
045-390-022-000
045-390-008-000
045-012-001-000
ALVIS CT
TAYLOR RD
045-041-044-000
045-012-002-000
CITRUS AVE
045-013-024-000
045-350-009-000
045-041-045-000
PACIFIC ST
045-350-008-000
045-012-003-000
045-013-023-000
045-013-002-000
045-041-025-000
045-013-003-000
045-012-004-000
045-013-004-000
045-013-005-000
045-013-022-000
PACIFIC ST
045-013-007-000
Legend
City Boundary
Project Area

NOTICE TO CONTRACTORS

Notice is hereby given that the City Council of the City of Rocklin, California, will receive sealed Bids as follows:

BID DATE / TIME:	Until Tuesday, October 16, 2024 (1:00 p.m.) (Local Time)
SUBMIT BIDS TO:	City Clerk City of Rocklin 3970 Rocklin Road Rocklin, CA 95677
FOR:	City of Rocklin Corporation Yard Emergency Generator
ESTIMATED CONSTRUCTION COST:	N/A
TOTAL CONTRACT TIME:	90 Calendar Days
CONTRACTOR'S CALIFORNIA LICENSE AND/OR CLASS REQUIRED	Class A or Class B with C-10 Contractors License
MANDATORY PRE-BID CONFERENCE DATE, TIME, AND LOCATION	Tuesday, October 2, 2024 at 10:00 a.m. at the City of Rocklin Corporation Yard, 4081 Alvis Court, Rocklin, CA 95677

Notice is hereby further given that the Project is a public works project within the requirements of Division 2, Part 7, Chapter 1 of the California Labor Code, and that each Bidder and all Subcontractors are required to be registered pursuant to Labor Code section 1725.5 at the time of bidding. ***Failure of the Bidder to be registered at the time of bidding shall render the Bid non-responsive and unavailable for award. A Subcontractor who is unregistered will not be permitted to work on the Project. If any Subcontractor required to be listed in the Bid is unregistered, that Subcontractor will be required to be substituted with a registered Subcontractor at no additional cost to the City and/or the listing of an unregistered Subcontractor may render the bid nonresponsive. Bidders shall provide the registration numbers for all listed Subcontractors within 24 hours of bid opening and registration numbers of all Subcontractors who are not required to be listed not later than 24 hours before they are to start work on the Project.***

City affirmatively identifies this project as a "public work" as that term is defined by Labor Code Section 1720, and the project is, therefore, subject to prevailing wages under Labor Code Section 1771. Contractor and its Subcontractors shall fully comply with all the provisions of the California Labor Code governing the performance of public works contracts including, but not limited to, payment of prevailing wages, limitations on time worked, compliance with apprentice requirements, maintenance of payroll records, posting of wages at the job site and prohibitions against discrimination. Copies of such prevailing rate of per diem wages are available upon request at the office of the City Clerk at 3970 Rocklin Road, Rocklin, CA 95677 or on the internet at http://www.dir.ca.gov/OPRL/PWD. Those prevailing wage rates hereby are incorporated in this Contract and made a part hereof. (See General Provisions, Chapter 6.)

Submit Bids (original/no copies) and bid security in a sealed envelope, marked "**Bid for CITY OF ROCKLIN CORPORATION YARD EMERGENCY GENERATOR**" ("Project") and include the company name and address on the envelope.

At the mandatory pre-bid conference meeting identified above, representatives of City will discuss the Contract Documents, bid submission requirements, site constraints, order of work and other items specific to this project. A project walk-through may follow after the pre-bid conference meeting. A sign-in sheet will be available up until commencement of the pre-bid conference meeting only. Attendance at the entire pre-bid meeting and project walk-through, if scheduled, is mandatory for bidding. Bids received from Bidders who did not sign the sign-in sheet and attend the meeting and project walk-through will be returned to the Bidder unopened. Attendance by Subcontractors is not mandatory, but all interested prospective Subcontractors are encouraged to attend.} The City will transmit Addenda to all prospective Bidders who have purchased full sets of Contract Documents, as the City considers necessary in response to questions raised at the meeting and walk-through. Addenda also will be posted on the City's website. Oral statements not confirmed by Addenda may not be relied upon and are not binding or legally effective. Except for mandatory walk-through, no other access to the project site will be granted pre-bid without the City's prior approval, which will require advanced notice and a scheduled appointment. During all site visits the Bidder must be accompanied full time by an authorized representative of the City. No exceptions to this requirement.

Contract Documents may be purchased at the City of Rocklin Corporation ("Corp") Yard, located at 4081 Alvis Court, Rocklin, CA 95677, telephone (916) 625-5241 between the hours of 8:00 a.m. - 4:00 p.m. Monday through Friday. The non-refundable cost for each set is $25.00. Alternatively, **Contract Documents may be downloaded at no charge from the City of Rocklin's website at www.rocklin.ca.us/DownloadBids.**

Complete sets of Contract Documents must be used in preparing Bids. The City does not assume responsibility for errors or misinterpretations resulting from the use of incomplete sets of Contract Documents. The City, in making copies of the Contract Documents available on the above terms, does so only for the purpose of obtaining Bids for the Work and does not confer license or grant for any other use.

Written questions regarding this Invitation for Bids should be directed to Matt McClure, Public Works Manager by email at matt.mcclure@rocklin.ca.us no later than Friday, October 4, 2024 at 3:00 p.m. All emails shall require verification of receipt by sender in accordance with the Instructions to Bidders.

Bidders shall develop and submit Bids at their own expense. The City will not reimburse any costs associated with the development and submittal of any and all Bids.

Each Bid must be submitted on the Bid Forms provided in the Contract Documents. The Bid must be submitted in a sealed envelope and received by the City Clerk no later than the time and date prescribed. The clock located in the City Clerk's office is considered the official local time. Bid submissions received after the designated time will not be opened and will be returned to the Bidder unopened. Telephones will not be available to Bidders at the City's offices for the preparation of Bids.

Each Bid must also be accompanied by security in the form of a Bidder's Bond issued by a corporate surety, a certified check, or cashier's check payable to the City of Rocklin, or cash. The amount of the bid security must be not less than ten percent (10%) of the Total Bid Price,

consisting of the total base bid plus the total additive bid alternates. The successful Bidder shall be required to execute a Material and Labor Payment Bond and Performance Bond, issued by a corporate surety, in conformance with the requirements set forth in the Contract Documents, each for not less than one hundred percent (100%) of the Contract Price.

Alternate Bids. Unless otherwise specified in the Special Provisions, if an alternate or alternates are identified by the City to the bidders, award will be based on any combination of Base Bid and Alternates as determined by the City. This process is conducted by the City in a "blind selection" format, *i.e.*, without knowledge of the identity of any of the Bidders before ranking of all Bidders from lowest to highest has been determined. Bidders are to submit their Bid in two sealed envelopes, both containing all identifying information for the Project, and both of which are then to be included in a third sealed envelope containing all identifying information for the Project but without any identifying information regarding the Bidder. The first envelope shall be marked "Envelope 1" and shall contain only an unsigned copy of the bidder's bid form, without any identifying information for the bidder and without any other required bid submissions. The second envelope shall be marked "Envelope 2" and shall contain a complete copy of all required bid documents, including a signed copy of the bid form. Any discrepancies in the pricing information in the two sealed envelopes may render the bid nonresponsive. Alternates may be selected for award by the City at its discretion. All awards will be made in the City's best interest.

If the lowest responsive, responsible bidder fails or refuses to execute any Contract for the Project, the City may, in its discretion, award the Contract to the second lowest, responsive responsible bidder. If the second lowest responsible, responsible bidder fails or refuses to execute any Contract for the Project, the City may, in its discretion, award that and all other Contracts for the Project to the third lowest, responsive responsible bidder. Any Bidder to whom any Contract for the Project is awarded who fails to execute the Contract and file acceptable bonds and insurance certificates as required in the Contract Documents will have its Bid Guarantee forfeited.

Pursuant to California Public Contracts Code, any contract awarded pursuant to this Notice to Contractors shall obtain a provision permitting, at the Contractors' sole expense, the substitution of securities for any moneys withheld to ensure performance under the Contract. The terms of such provisions shall be according to the requirements of the Public Contracts Code Section 22300.

No Bid received and read aloud may be withdrawn for a period of sixty (60) days after the bid opening date, except pursuant to California Public Contract Code Section 5101 *et seq*.

The City reserves the right to award the Contract, to reject any or all Bids, to waive non-material and inconsequential irregularities in any Bid, and to reject nonconforming, nonresponsive, non-responsible, or conditional Bids.

_____ _____

Justin Nartker
Director of Public Works
City of Rocklin

Date

CERTIFICATE OF AUTHORIZATION
(If Bidder is a Partnership)

STATE OF CALIFORNIA
COUNTY OF _____

I HEREBY CERTIFY that at a meeting of the Partners of the _____ _____, a partnership existing under the laws of the State of California, held on _____, 20___, the following resolution was duly passed and adopted:

> "RESOLVED, that _____, as _____ of the Partnership, be and is hereby authorized to execute the Bid dated _____, 20___, to the City of Rocklin and this Partnership and that his/her execution thereof, attested by the _____ shall be the official act and deed of this Partnership."

I further Certify that said resolution is now in full force and effect.
IN WITNESS WHEREOF, I have hereunto set my hand this _____ day of _____, 20___.

_____
Managing Partner

_____
Partnership Address

CERTIFICATE OF AUTHORIZATION
(If Bidder is a Joint Venture)

STATE OF CALIFORNIA
COUNTY OF _____

I HEREBY CERTIFY that at a meeting of the Principals of the _____ _____, a joint venture existing under the laws of the State of California, held on _____, 20___, the following resolution was duly passed and adopted:

> "RESOLVED, that _____, as _____ of the Joint Venture, be and is hereby authorized to execute the Bid dated _____, 20___, to the City of Rocklin and this Joint Venture and that his/her execution thereof, attested by the _____ shall be the official act and deed of this Joint Venture."

I further Certify that said resolution is now in full force and effect.
IN WITNESS WHEREOF, I have hereunto set my hand and affixed the official seal of the Joint Venture this _____ day of _____, 20___.

_____
Managing Principal

(seal)

_____
Joint Venture Address

ATTACHMENT G

[Projects of One Million Dollars ($1,000,000.00) or More

IRAN CONTRACTING ACT CERTIFICATION

Pursuant to California Public Contract Code (PCC) section 2204, an Iran Contracting Act certification is required for solicitations of goods or services of $1,000,000 or more.

To submit a bid to the City of Rocklin, you must complete **ONLY ONE** of the following two paragraphs. To complete paragraph 1, check the corresponding box **and** complete the certification for paragraph 1. To complete paragraph 2, simply check the corresponding box.

☐ 1. We are not on the current list of persons engaged in investment activities in Iran created by the California Department of General Services ("DGS") pursuant to PCC 2203(b), and we are not a financial institution extending twenty million dollars ($20,000,000) or more in credit to another person, for 45 days or more, if that other person will use the credit to provide goods or services in the energy sector in Iran and is identified on the current list of persons engaged in investment activities in Iran created by DGS.

OR

☐ 2. We have received written permission from the SLDMWA to submit a proposal pursuant to PCC 2203(c) or (d). *A copy of the written permission from the SLDMWA is included with our proposal.*

CERTIFICATION FOR PARAGRAPH 1:

I, the official named below, CERTIFY UNDER PENALTY OF PERJURY, that I am duly authorized to legally bind the Proposer to the clause in paragraph 1. This certification is made under the laws of the State of California.

BIDDER:_____ Date_____

BY:_____
Signature

_____
Type/Print Name

_____
Title

Executed in the County of _____, State of _____.

ATTACHMENT I

PERFORMANCE BOND
(To be Submitted with Construction Agreement)

BOND NO.:_____

PREMIUM:_____

City of Rocklin

KNOW ALL PERSONS BY THESE PRESENTS:
THAT WHEREAS, the CITY OF ROCKLIN (hereinafter referred to as "CITY") has awarded to _____, hereinafter designated as the "Principal" a contract for _____ (hereinafter referred to as the "Project").

WHEREAS, the work to be performed by Principal is more particularly set forth in the Contract Documents for the Project dated _____, (hereinafter referred to as "Contract Documents"), the terms and conditions of which are expressly incorporated herein by reference; and

WHEREAS, said Principal is required by said Contract Documents to perform the terms thereof and to furnish a bond for the faithful performance of said Contract Documents.

NOW, THEREFORE, we, the undersigned Principal and _____ as Surety, a corporation organized and duly authorized to transact business under the laws of the State of California, are held and firmly bound unto the CITY in the sum of _____ DOLLARS, ($_____), said sum being not less than one hundred percent (100%) of the total amount of the Contract, for which amount well and truly to be made, we bind ourselves, our heirs, executors and administrators, successors and assigns, jointly and severally, firmly by these presents.

THE CONDITION OF THIS OBLIGATION IS SUCH, that, if said Principal, his or its heirs, executors, administrators, successors or assigns, shall in all things stand to and abide by, and well and truly keep and perform the covenants, conditions and agreements in the Contract Documents and any alteration thereof made as therein provided, on its part, to be kept and performed at the time and in the manner therein specified, and in all respects according to their intent and meaning; and shall faithfully fulfill all obligations including the one-year guarantee, or longer guarantee if required in the Contract Documents, of all materials and workmanship; and shall indemnify and save harmless the CITY, its officers and agents, as stipulated in said Contract Documents, then this obligation shall become null and void; otherwise it shall be and remain in full force and effect.

As a part of the obligation secured hereby and in addition to the face amount specified therefore, there shall be included costs and reasonable expenses and fees including reasonable attorneys' fees, incurred by CITY in enforcing such obligation.

The obligations of Surety hereunder shall continue so long as any obligation of Principal remains. Nothing herein shall limit the CITY's rights or Principal's or Surety's obligations under the Contract, law or equity, including, but not limited to, California Code of Civil Procedure section 337.15.

Whenever Principal shall be, and is declared by the CITY to be, in default under the Contract Documents, Surety shall remedy the default pursuant to the Contract Documents, or shall promptly, at Surety's option:

(1) Take over and complete the Project in accordance with all terms and conditions in the Contract Documents; or

(2) Obtain a bid or bids for completing the Project in accordance with all terms and conditions in the Contract Documents and upon determination by Surety of the lowest responsive and responsible bidder, arrange for a Contract between such bidder, Surety and the CITY, and make available as work progresses sufficient funds to pay the cost of completion of the Project, less the balance of the contract price, including other costs and damages for which Surety may be liable. The term "balance of the contract price" as used in this paragraph shall mean the total amount payable to Principal by the CITY under the Contract and any modification thereto, less any amount previously paid by the CITY to Principal and any other set offs pursuant to the Contract Documents.

(3) Permit the CITY to complete the Project in any manner consistent with California law and make available as work progresses sufficient funds to pay the cost of completion of the Project, less the balance of the contract price, including other costs and damages for which Surety may be liable. The term "balance of the contract price" as used in this paragraph shall mean the total amount payable to Principal by the CITY under the Contract and any modification thereto, less any amount previously paid by the CITY to Principal and any other set offs pursuant to the Contract Documents.

If Surety does not proceed as provided in Paragraphs 1-3 with reasonable promptness, Surety shall be deemed to be in default on this Bond seven (7) days after receipt of additional written notice from the CITY to Surety demanding that the Surety perform its obligations under this Bond, and the CITY shall be entitled to enforce any remedy available to it.

Surety expressly agrees that the CITY may reject any contractor or subcontractor which may be proposed by Surety in fulfillment of its obligations in the event of default by Principal. Surety shall not utilize Principal in completing the Project nor shall Surety accept a bid from Principal for completion of the Project if the CITY, when declaring Principal in default, notifies Surety of the CITY's objection to Principal's further participation in the completion of the Project.

Surety, for value received, hereby stipulates and agrees that no change, extension of time, alteration or addition to the terms of the Contract Documents or to the Project to be performed there under shall in any way affect its obligations on this bond, and it does hereby waive notice of any such change, extension of time, alteration or addition to the terms of the Contract Documents or to the Project.

IN WITNESS WHEREOF, we have hereunto set our hands and seals this _____ day of _____, 20___, then names and corporate seals of each corporate party being hereto affixed and these presents duly signed by its undersigned representative, pursuant to the authority of its governing body.

Principal:_____

By:_____

Surety: _____

Address: _____

Telephone: _____

Attorney in Fact: _____

(Attach Attorney-In-Fact Certificate, Corporate Seal and Surety Seal. This bond must be accompanied by a current Power of Attorney Appointing the Attorney-in-Fact)

NOTICE:

A CERTIFICATE OF ACKNOWLEDGMENT IN ACCORDANCE WITH THE PROVISIONS OF CIVIL CODE SECTION 1189 MUST BE ATTACHED FOR EACH PERSON EXECUTING THIS AGREEMENT ON BEHALF OF PRINCIPAL AND SURETY.

ATTACHMENT J

PAYMENT BOND
(To be Submitted with Construction Agreement)

BOND NO.:_____

PREMIUM:_____

City of Rocklin

KNOW ALL PERSONS BY THESE PRESENTS:
THAT WHEREAS, the CITY OF ROCKLIN (hereinafter referred to as "CITY") has awarded to _____, (hereinafter designated as "Principal") an agreement for _____ (hereinafter referred to as the "Project").

WHEREAS, the work to be performed by Principal is more particularly set forth in the Contract Documents for the Project dated _____, (hereinafter referred to as the "Contract"), the terms and conditions of which are expressly incorporated herein by reference; and

WHEREAS, said Principal is required to furnish a bond in connection with said Contract providing that if Principal or any of its subcontractors shall fail to pay for any materials, provisions, or other supplies, or terms used in, upon, for or about the performance of the Work contracted to be done, or for any work or labor done thereon of any kind the Surety on this bond will pay the same together with a reasonable attorney's fee in case suit is brought on the bond.

NOW, THEREFORE, we, the undersigned Principal and _____ as Surety, a corporation organized and duly authorized to transact business under the laws of the State of California, are held and firmly bound unto the CITY in the sum of _____ DOLLARS, ($_____), said sum being not less than one hundred percent (100%) of the total amount of the Contract, for which amount well and truly to be made, we bind ourselves, our heirs, executors and administrators, successors and assigns, jointly and severally, firmly by these presents.

THE CONDITION OF THIS OBLIGATION IS SUCH that if the Principal, his or its subcontractors, heirs, executors, administrators, successors, or assigns, shall fail to pay for any materials, provisions, or other supplies or machinery used in, upon, for or about the performance of the Work contracted to be done, or for work or labor thereon of any kind, or fail to pay any of the persons named in California Civil Code Section 9100, or amounts due under the Unemployment Insurance Code with respect to work or labor performed by any such claimant, or for any amounts required to be deducted, withheld, and paid over to the Employment Development Department from the wages of employees of Principal and his subcontractors pursuant to Section 13020 of the Unemployment Insurance Code with respect to such work and labor, and all other applicable laws of the State of California and rules and regulations of its agencies, then said Surety will pay the same in or to an amount not exceeding the sum specified herein. In case legal action is required to enforce the provisions of this bond, the prevailing party shall be entitled to recover reasonable attorneys' fees in addition to court costs, necessary disbursements and other consequential damages. In addition to the provisions hereinabove, it is agreed that this bond will inure to the benefit of any and all persons, companies and corporations entitled to make claims under Section 9100 of the California Civil Code, so as to give a right of action to them or their assigns in any suit brought upon this bond.

The said Surety, for value received, hereby stipulates and agrees that no change, extension of time, alteration or additions to the terms of the said Contract or to the work to be performed thereunder or the specification accompanying the same shall in any way affect its obligations on this bond, and it does hereby waive notice of any such change, extension of time, alteration or addition to the terms of the Contract or to the work or to the specifications.

IN WITNESS WHEREOF, we have hereunto set our hands and seals this _____ day of _____, 20___, then names and corporate seals of each corporate party being hereto affixed and these presents duly signed by its undersigned representative, pursuant to the authority of its governing body.

Principal:_____

By:_____

Surety: _____

Address: _____

Telephone: _____

Attorney in Fact: _____

(Attach Attorney-In-Fact Certificate, Corporate Seal and Surety Seal. This bond must be accompanied by a current Power of Attorney Appointing the Attorney-in-Fact)

NOTICE:

A CERTIFICATE OF ACKNOWLEDGMENT IN ACCORDANCE WITH THE PROVISIONS OF CIVIL CODE SECTION 1189 MUST BE ATTACHED FOR EACH PERSON EXECUTING THIS AGREEMENT ON BEHALF OF PRINCIPAL AND SURETY.

ATTACHMENT K

WORKERS' COMPENSATION INSURANCE CERTIFICATION
(To be Submitted with Construction Agreement)

TO THE CITY OF ROCKLIN:

The undersigned does hereby certify that he is aware of the provisions of Section 3700 et seq. of the Labor Code which require every employer to be insured against liability for Workmen's compensation or to undertake self-insurance in accordance with the provisions of said Code, and that he will comply with such provisions before commencing the performance of work on this Contract.

Name of Contractor

By:_____

Title:_____

Address:_____

Date:_____

PLEASE READ CAREFULLY BEFORE SIGNING

To be signed by authorized corporate officer or partner or individual. If the Contractor is: (example)

1. An individual using a firm name, sign "John Doe, an individual doing business as "Blank Company."
2. An individual doing business under his own name, sign: your name only.
3. A co-partnership, sign" "John Doe, and Richard Doe, co-partners doing business as Blank Company, by John Doe, Co-Partner."
4. A corporation or limited liability company, sign: "Blank Company, by John Doe, Secretary." (or other title)
5. A joint venture, sign: "Blank Joint Venture, by John Doe, Managing Principal."

ATTACHMENT L

ESCROW AGREEMENT FOR SECURITY DEPOSITS IN LIEU OF RETENTION

This Escrow Agreement is made and entered into by and between _____ _____whose address is _____, hereinafter called Owner, _____ whose address is _____, hereinafter called Contractor, and _____ _____ whose address is _____, _____, hereinafter called Escrow Agent.

For the consideration hereinafter set forth, the Owner, Contractor, and Escrow Agent agree as follows:

1. Pursuant to Section 22300 of the Public Contract Code of the State of California, Contractor has the option to deposit securities with Escrow Agent as a substitute for retention earnings required to be withheld by Owner pursuant to the Construction Contract entered into between the Owner and Contractor for (in the amount of) _____dated _____ (hereinafter referred to as the "Contract"). Alternatively, on written request of the Contractor, the Owner shall make payments of the retention earnings directly to the escrow agent. When the Contractor deposits the securities as a substitute for Contract earnings, the Escrow Agent shall notify the Owner within ten (10) days of the deposit. The market value of the securities at the time of the substitution shall be at least equal to the cash amount then required to be withheld as retention under the terms of the Contract between the Owner and Contractor. Securities shall be held in the name of _____, and shall designate the Contractor as the beneficial owner.

2. The Owner shall make progress payments to the Contractor for those funds which otherwise would be withheld from progress payments pursuant to the Contract provisions, provided that the Escrow Agent holds securities in the form and amount specified above.

3. When the Owner makes payment of retentions earned directly to the Escrow Agent, the Escrow Agent shall hold them for the benefit of the Contractor until the time that the escrow created under this contract is terminated. The Contractor may direct the investment of the payments into securities. All terms and conditions of this agreement and the rights and responsibilities of the parties shall be equally applicable and binding when the Owner pays the Escrow Agent directly.

4. Contractor shall be responsible for paying all fees for the expenses incurred by Escrow Agent in administering the Escrow Account and all expenses of the Owner. These expenses and payment terms shall be determined by the Owner, Contractor, and Escrow Agent.

5. The interest earned on the securities or the money market accounts held in escrow and all interest earned on that interest shall be for the sole account of the Contractor and shall be subject to withdrawal by Contractor at any time and from time to time without notice to the Owner.

6. Contractor shall have the right to withdraw all or any part of the principal in the Escrow Account only by written notice to Escrow Agent accompanied by written authorization

from the Owner to the Escrow Agent that Owner consents to the withdrawal of the amount sought to be withdrawn by Contractor.

7. The Owner shall have a right to draw upon the securities in the event of default by the Contractor. Upon seven days' written notice to the Escrow Agent from the owner of the default, the Escrow Agent shall immediately convert the securities to cash and shall distribute the cash as instructed by the Owner.

8. Upon receipt of written notification from the Owner certifying that the Contract is final and complete, and that the Contractor has complied with all requirements and procedures applicable to the Contract, Escrow Agent shall release to Contractor all securities and interest on deposit less escrow fees and charges of the Escrow Account. The escrow shall be closed immediately upon disbursement of all moneys and securities and payments of fees and charges.

9. Escrow Agent shall rely on the written notifications from the Owner and the Contractor pursuant to Sections (5) to (8), inclusive, of this agreement and the Owner and Contractor shall hold Escrow Agent harmless from Escrow Agent's release and disbursement of the securities and interest as set forth above.

10. The names of the persons who are authorized to give written notice or to receive written notice on behalf of the Owner and on behalf of Contractor in connection with the foregoing, and exemplars of their respective signatures are as follows:

On behalf of Owner:	On behalf of Contractor:
_____	_____
Title	Title
_____	_____
Name	Name
_____	_____
Signature	Signature
_____	_____
Address	Address

On behalf of Escrow Agent:

_____
Title

_____
Name

_____
Signature

_____
Address

At the time the Escrow Account is opened, the Owner and Contractor shall deliver to the Escrow Agent a fully executed counterpart of this Agreement.

IN WITNESS WHEREOF, the parties have executed this Agreement by their proper officers on the date first set forth above.

Owner:	Contractor:
_____	_____
Title	Title
_____	_____
Name	Name
_____	_____
Signature	Signature

ATTACHMENT M

GUARANTEE FORM

**{Print on Contractor/Subcontractor Letterhead
And Submit at Close-Out}**

_____ {Contractor's Name} hereby unconditionally guarantees that the Work performed at _____ [insert Project] has been done in accordance with the requirements of the Contract therefor and further guarantees the Work of the Contract to be and remain free of defects in workmanship and materials for a period of one (1) year from and after City acceptance of the Work, in accordance with the General Provisions, unless a longer guarantee period is called for by the Contract Documents, in which case the terms of the longer guarantee shall govern. The Contractor hereby agrees to repair or replace any and all Work, together with any adjacent Work which may have been damaged or displaced in so doing, that may prove to be not in accordance with the requirements of the Contract or that may be defective in its workmanship or materials within the guarantee period specified, without any expense whatsoever to the City, ordinary wear and tear and unusual abuse and neglect only excepted. The Contractor has provided contract bonds, which will remain in full force and effect during the guarantee period.

The Contractor further agrees that within ten (10) calendar days after being notified in writing by the City of any Work not in accordance with the requirements of the contract or any defects in the Work, it will commence and prosecute with due diligence all Work necessary to fulfill the terms of this guarantee, and to complete the Work within a period of time stipulated in writing. In the event it fails to so comply, Contractor does hereby authorize the City to proceed to have such Work done at the Contractor's expense and it will pay the cost thereof upon demand. The City shall be entitled to all costs, including reasonable attorneys' fees, necessarily incurred upon the Contractor's refusal to pay the above costs.

The guarantee period for corrected defective work shall continue for a duration equivalent to the original guarantee period.

Notwithstanding the foregoing paragraph, in the event of an emergency constituting an immediate hazard to the health or safety of the employees of the City, or its property or licensees, the City may undertake at the Contractor's expense without prior notice, all Work necessary to correct such hazardous condition when it was caused by the Work of the Contractor not being in accordance with the requirements of this contract, or being defective, and to charge the same to the Contractor as specified in the preceding paragraph.

The guarantee set forth herein is not intended by the parties, nor shall it be construed, as in any way limiting or reducing the City's rights to enforce all terms of the Contract referenced hereinabove or the time for enforcement thereof. This guarantee is provided in addition to, and not in lieu of, the City's rights on such contract.

CONTRACTOR'S SIGNATURE_____

PRINT NAME_____

CITY OF ROCKLIN
GENERAL PROVISIONS

TABLE OF CONTENTS

CHAPTER	SUBJECT	Page
TABLE OF CONTENTS		1
CHAPTER 1	TERMS AND DEFINITIONS	3
CHAPTER 2	BID REQUIREMENTS AND CONDITIONS	12
CHAPTER 3	AWARD AND EXECUTION OF CONTRACT	22
CHAPTER 4	SCOPE OF WORK	33
CHAPTER 5	CONTROL OF WORK AND MATERIALS	41
CHAPTER 6	LEGAL RELATIONS AND RESPONSIBILITIES	59
CHAPTER 7	PROSECUTION OF THE WORK	85
CHAPTER 8	MEASUREMENT AND PAYMENT	100
CHAPTER 9	CHANGES AND CLAIMS	110
CHAPTER 10	ENVIRONMENTAL CONTROLS AT WORK SITE	128
CHAPTER 11	PRECONSTRUCTION PHOTOGRAPHS AND RECORD DRAWINGS	136

.

CHAPTER 1 – TERMS AND DEFINITIONS

TABLE OF CONTENTS

Section **Page**

1-1 GENERAL 3
1-2 ABBREVIATIONS..... 3
1-3 DEFINITIONS..... 4

CHAPTER 1 TERMS AND DEFINITIONS

1-1 GENERAL

The Contract Documents are written to the Bidder before award and the Contractor after award. Before award, interpret sentences written in the imperative mode as starting with “The Bidder must” and interpret “you” as “the Bidder” and “your” as “”the Bidder’s.” After award, interpret sentences written in the imperative mode as starting with “The Contractor must” and “you as “the Contractor” and “your” as “the Contractor’s”.

Where a location is not specified with the words “shown,” “specified,” or “described”, interpret:

1. “Shown” as “shown on the plans.”
2. “Specified” as “specified in the Specifications.”
3. “Described” as “described in the Contract Documents.” “Described” means “shown, specified or both.”

Whenever the following terms, titles, or abbreviations are used in the Contract Documents, the intent and meaning shall be as herein defined. Working titles having a masculine gender, such as "workman" and "journeyman" and the pronoun "he”, are utilized in the Contract Documents for the sake of brevity, and are intended to refer to persons of either gender.

1-2 ABBREVIATIONS

AASHTO	American Association of State Highway and Transportation Officials
AC	Asphalt Concrete
ACI	American Concrete Institute
ADA	Americans with Disabilities Act
AISC	American Institute of Steel Construction
AISI	American Iron and Steel Institute
APA	American Plywood Association
ARB	California Air Resources Board
ASA	American Standards Association
ASME	American Society of Mechanical Engineers
ASTM	American Society for Testing and Materials
AT&T	American Telephone and Telegraph
AWG	American Wire Gage
AWS	American Welding Society
AWWA	American Water Works Association
BMP	Best Management Practice
California-MUTCD	California Manual of Uniform Traffic Control Devices
Cal-OSHA	California Occupational Safety and Health Administration
Caltrans	California Department of Transportation
CDFW	California Department of Fish and Wildlife
CEQA	California Environmental Quality Act of 1970
CL	Centerline
CPM	Critical Path Method
CSI	Construction Specifications Institute
CWA	Clean Water Act

CY	Cubic Yards
DI	Drop Inlet
DIR	California Department of Industrial Relations
DLSE	Division of Labor Standards Enforcement
DWR	Daily Work Report
EA	Each
EP	Edge of Pavement
ESCP	Erosion and Sediment Control Plan
FS	Federal Specifications
LF	Linear Feet
LS	Lump Sum
MSDS	Material Safety Data Sheet
NEC	National Electrical Code
NEMA	National Electrical Manufacturers Association
OSHA	Occupational Safety and Health Act
OPRL	DIR, Director's Office of Policy, Research and Legislation
PCC	Portland Cement Concrete
PG&E	Pacific Gas & Electric
PS	Pump Station
QC	Quality Control
QSD	Qualified SWPPP Developer
QSP	Qualified SWPPP Practitioner
SD	Storm Drain or Storm Drainage
SF	Square Foot/Feet
SS	Sanitary Sewer
STA	Station
SWPPP	Storm Water Pollution Prevention Plan
SWRCB	State Water Resources Control Board
TCP	Traffic Control Plan
Title 8	Title 8 (Construction Safety Orders) of the California Code of Regulations
Title 19	Title 19 (Public Safety) of the California Code of Regulations
Title 24	Title 24 (Building Standards) of the California Code of Regulations
TOC	Top of Curb
Typ. or TYP	Typical
UL	Underwriters' Laboratories, Inc.
UBC	Uniform Building Code (latest edition)
UMC	Uniform Mechanical Code (latest edition)
UPC	Uniform Plumbing Code (latest edition)
USA	Underground Service Alert

1-3 DEFINITIONS

Acceptance, Final Acceptance – Formal action of the City of Rocklin in determining that the Contractor's work has been completed in accordance with the Contract Documents and in notifying the Contractor in writing of the acceptability of the Work**.**

Acts of God – "Acts of God" shall include only the following occurrences or conditions and effects: earthquakes in excess of a magnitude of 3.5 on the Richter Scale, tidal waves, flooding, tornadoes and hurricanes**.**

Addenda – Written or graphic instruments issued prior to the opening of Bids which clarify, correct, or change the bidding requirements or the proposed Contract Documents**.**

Agreement – The written agreement signed by the City and the Contractor covering the Work and the furnishing of labor, materials, tools, equipment, supplies, transportation, supervision, resources, and everything necessary to complete the Work.

Allowance – An amount of money set aside under the Contract for a special purpose identified in the Contract.

Architect, Consulting Engineer and/or Construction Manager – A person or persons, firm, partnership, joint venture, corporation, or combination thereof or authorized representative thereof, acting in the capacity of consultant to the City. The Architect or Consulting Engineer or Construction Manager shall issue directions to the Contractor only through the City. When the Contract Documents require that approval be obtained from the Architect or Consulting Engineer or Construction Manager, such approval shall be requested from and be given by the City.

As Shown, Etc. – Where "as shown", "as latest indicated", "as detailed", or words of similar import are used, the reference is to the Contract unless specifically stated otherwise. Where "as directed", "as permitted", "approved", or words of similar import are used, they shall mean the written direction, permission, or approval of the City.

Bid – When submitted on the prescribed bid form, properly signed and guaranteed, the Bid constitutes the offer of the Bidder to complete the Work at the price shown on the Bidder's bid form.

Bidder – Any person, persons, firm, partnership, joint venture, corporation, limited liability company or combination thereof, submitting a Bid for the Work, acting directly or through a duly authorized representative.

Bid Documents – The sum of the documents that comprise the Bid by a Bidder to perform the Work.

Bid Form – The approved form, which includes a sum of required documents, upon which the City requires a formal Bid be prepared and submitted for the Work. See **BID FORM.**

Bid Guarantee – The cash, cashier's check, certified check, or Bidder's bond accompanying the Bid submitted by the Bidder as a guaranty that the Bidder will enter into a Contract with the City for the performance of the Work if the Contract is awarded to the Bidder.

Bid Item – Individual line items to be included in the Bid, as set forth on the Bid Form.

Bid Opening – The event conducted by the City during which the sealed Bids submitted by Bidders to perform the Work are opened and publicly read.

Calendar Day – Every day shown on the calendar. When the Contract Time is stated in Calendar Days, every day will be charged toward the Contract Time.

Change Order – A Contract amendment approved by the City that includes, but is not limited to, alterations, deviations, additions to, or deletions from, the Contract which are required for the proper completion of the Work. A Change Order may or may not include adjustments to the Contract Time and/or to the Total Contract Price.

City – Shall mean the City of Rocklin, acting through its authorized representatives.

City Council – The City Council of the City of Rocklin, a political subdivision of the State of California. Also referred to as "Council".

City of Rocklin Construction Standard Specifications – the City's standard specifications for construction, located on the City's website.

City of Rocklin Improvement Standards– the City's standard requirement for improvement projects, located on the City's website.

Completion – The point in the Project at which the Work is 100% performed.

Construction Change Directive (CCD) – A written order to the Contractor, issued after execution of the Contract, signed by the City or the Owner's Representative directing a change in the Work and stating a proposed basis for adjustment, if any, in the Total Contract Price or Contract Time, or both, and which shall be used in the absence of total agreement with the Contractor on the terms of a Change Order or when time does not permit processing of a Change Order prior to implementation of the change.

Contract – The entire binding agreement and contract between the City and Contractor relating to the Project, including the Agreement, and all documents incorporated into the Agreement by reference, and all Contract Documents.

Contract Documents – The Notice to Contractors, Addenda, Bid Form, Agreement, Plans, General Provisions, Special Provisions, General Requirements (Division 1), Technical Specifications (Divisions 2 through 16), Permits from other agencies as may be required by law, City of Rocklin Construction Specifications, Improvement Standards and Standard Drawings, Caltrans Standard Plans and Specifications as applicable, Standard Forms, Supplemental Drawings, all required bonds, Exhibits, the Contract Schedule, Storm Water Pollution Prevention Plan (whether prepared by the City or the Contractor) and any and all supplemental agreements amending or extending the Work contemplated and which may be required to complete the Work in an acceptable manner. Supplemental agreements are written agreements covering alterations, amendments or extensions to the Contract Documents and include Change Orders, Construction Change Directives, Field Directives, Field Orders and Supplemental Drawings.

Contract Commencement Date – The date established in the Notice to Proceed. If there is no Notice to Proceed, it shall be the date of the executed Agreement for Construction or such other date as may be established therein.

Contract Completion Date – The date by which the Contract requires Completion.

Contract Schedule – The schedule produced by the Contractor in response to the requirements of the Contract Documents.

Contract Time – The time stated in the Contract for completion of the Work. The Contract Time may be a single allotment of time, a group of times specific to portions of the Work, or a combination of the two.

Contractor – The person or persons, firm, partnership, joint venture, corporation, or combination thereof, private or municipal, who (that) has (have) entered into a Contract, as defined in the Contract Documents, with the City.

Day – Any reference to "day" or "days" without expressly stating whether they are "working days" or "calendar days" shall be construed to mean calendar days.

Director – The person appointed by the City Manager for the City of Rocklin for the department through which the Project will be procured.

Drawings – Also referred to as "Plans". The Project Plans, Standard Drawings, drawings, profiles, typical cross sections, general cross sections, Working Drawings and supplemental drawings, plates or reproductions thereof, approved by the City, which show the locations, character, dimensions and details of the Work to be performed. Once approved, all such drawings are incorporated into and become a part of the Contract Documents whether or not reproduced in the Special Provisions.

In the above definition, the following terms are defined as follows:

A. Project Plans: The project plans and specific details and dimensions particular to the Work and as supplemented by the Standard Drawings insofar as the same may apply.

Engineer – The City Engineer of the City of Rocklin for which work will be done under these Contract Documents, acting personally or through agents or assistants duly authorized by the Engineer.

Estimated Quantities – The list of items of Work and the estimated quantities associated with the Work. The Estimated Quantities provide the basis for the Bid.

Field Directive – Written documentation of the actions of the City in directing the Contractor. Also referred to as a "Directive."

General Provisions – Specific clauses that are part of the Contract and are located in Chapters 1-11. They assist in the governing of the Contract and in the contract performance, setting forth conditions and requirements of the Contractor and the City.

General Requirements – The part of the Contract Documents establishing special conditions or requirements particular to the Work and general clauses that establish how the Project is to be administered and supplementary to the General Provisions and Special Provisions.

Hazardous Waste – The term Hazardous Waste shall have the meaning provided in Section 1004 of the Solid Waste Disposal Act (42 USC Section 6903) as amended from time to time.

Inspector – The person or persons authorized to act as agent(s) for the City in the inspection of the Work.

Invitation for Bids – The written notice whereby interested parties are informed of the date, location, and time of the Bid Opening of a proposed City Project and the terms and conditions of submitting Bids to perform the Work. Also called Notice to Contractors.

Legal Holidays – Legal holidays shall include the following holidays designated by the City: New Year's Day, Martin Luther King Day, President's Day, Cesar Chavez Day, Memorial Day, Independence Day, Labor Day, Veteran's Day, Thanksgiving Day, the day after Thanksgiving, Christmas Eve, and Christmas Day.

Notice to Contractors – Same as Invitation for Bids.

Notice To Proceed – The written authorization by the City to the Contractor specifying the date the Work may begin and any conditions regarding the beginning of the Work.

Plans – See "Drawings."

Progress Schedule – A schedule prepared and maintained by the Contractor indicating the current status of the Work and the projected activities, tasks and durations planned to complete the Work in accordance with the Contract Time of Completion dates.

Owner's Representative – The City's designated agent engaged to perform all functions delegated to the Owner's Representative by the Contract Documents. The Owner's Representative may or may not be the Project Manager or a construction manager. The Owner's Representative will be the Contractor's primary contact during construction of the Project.

Project – Shall mean the Work.

Project Manager – The City's employee assigned to oversee the Project on a daily basis.

Proposed Change Order (PCO) – A document issued by the Contractor proposing a change to the Work and stating a proposed basis for adjustment, if any, in the Total Contract Price Contract Time, or both. A PCO shall be used by the Contractor to respond to a Request for Proposal. A PCO is not effective to authorize the proposed change to the Work, to the Total Contract Price or to the Contract Time unless it is accepted in writing by the City.

Record Drawings – Drawings prepared by the Contractor that document changes to, additions to, or deductions from the Plans, and which represent the Work as constructed, including, but not limited to, existing utilities found during construction of the Work.

Reference to Codes – Unless otherwise noted, all references to statutes are to the laws of the State of California and/or of the United States as codified in the various specified codes.

Request for Information (RFI) – A document issued by the Contractor seeking clarification and/or additional information regarding an aspect of the Work. An RFI is not to be used to request materials/equipment substitutions or value engineering/cost reduction incentive proposals. The response to the RFI does not constitute authorization or direction to proceed

with any changed or additional work. Changed or additional work must be separately authorized by the City.

Request for Proposal (RFP) – A document issued by the Owner's Representative requesting pricing information and/or a proposed adjustment in Contract Time for a described scope of work. An RFP is not a Change Order, a CCD or a direction to proceed with the scope of work described in the RFP. The Contractor's response to the RFP shall be in the form of a Proposed Change Order.

Schedule of Submittals – A schedule prepared and maintained by the Contractor of required submittals and the time requirements to support scheduled performance of related construction activities.

Schedule of Values – A statement furnished by the Contractor to the City reflecting the portions of the Total Contract Price allotted for the various parts of the Work for each work activity contained on the Contract Schedule. Unless otherwise indicated in the Specifications, the total of the Schedule of Values shall equal the full cost of the Work, including all labor, material, equipment, overhead, and profit. For lump sum contracts, the Schedule of Values is the basis for reviewing the Contractor's application for progress payments.

Special Provisions – The Special Provisions are specific clauses setting forth conditions or requirements particular to the Work.

Specifications – The directions, provisions, and requirements contained herein. When the term "Specifications" or "these Specifications" is used, it means the provisions as set forth herein, together with any amendments or revisions that may be set forth in the Special Provisions. The Specifications are comprised of "General Provisions", Special Provisions", "General Requirements" and "Technical Specifications".

Standard Drawings – The City of Rocklin Construction Specifications, Improvement Standards and Standard Drawings, which are incorporated into the Standard Construction Specifications, and made a part of the Plans by reference to one or more specific Standard Drawings.

State – The State of California.

State Specifications – Unless otherwise stated in the Special Provisions, the version of the Standard Specifications of the State of California, Department of Transportation, in effect at the time of Notice to Contractors.

State Plans – Unless otherwise stated in the Special Provisions, the version of the Standard Plans of the State of California, Department of Transportation, in effect at the time of Notice to Contractors.

Subcontractor – A properly licensed party under contract to and responsible to the Contractor for performing a specified part of the Work; or a properly licensed party under contract and responsible to a Subcontractor of the Contractor.

Substantial Completion – The stage in the progress of the Work when the Work or designated portion thereof is sufficiently complete in accordance with the Contract Documents

so City can occupy or utilize the Work for its intended use, and only minor corrective Work remains to be performed, all required approvals, certificates of occupancy and other sign-off from any other public agencies with jurisdiction have been obtained, (provided such approvals are not delayed as a result of causes unrelated to Contractor's or its Subcontractors', sub-subcontractors', or suppliers' performance or failure to perform the Work or to satisfy its obligations under the Contract Documents) and Contractor has cleaned up and removed all equipment, tools and other materials from the Work area. Contractor shall secure and deliver to City written warranties and guaranties from its Subcontractors, sub-subcontractors and suppliers bearing the date of Substantial Completion or some other date as may be agreed to by City and stating the period of warranty as required by the Contract Documents.

Supplemental Drawing – Supplemental Drawings define the Plans or Specifications in greater detail by providing additional information that may have not been specifically or clearly shown or called out on the Plans or in the Specifications.

Technical Specifications – The provisions of the Specifications that describe the technical aspects of the Work, including all technical references contained therein.

Total Bid Price – The aggregate sum of the Bid, including all additive items.

Total Contract Price – The total price for the Work as bid by the Contractor, including any additions or subtractions made via Change Orders.

Work – All obligations and/or actions which the Contractor is contractually required to fulfill and/or perform as specified, indicated, shown, contemplated, or implied in the Contract, including but not limited to (1) all alterations, amendments, or extensions made by Change Order or other written directives or directives of the City; (2) furnishing of all materials, supplies, equipment, tools, labor, transportation, supervision, and all incidentals necessary to perform all tasks required by the Contract; (3) all tasks, duties and obligations required by the Contract; and (4) closing documents for the Project such as complete Record Drawings and submission of all manuals.

Working Day – Any day except: (a) Saturdays, Sundays, and City Legal Holidays; (b) days on which the Contractor is specifically required by the Special Provisions or by law to suspend construction operations; or (c) days on which the Contractor is prevented from proceeding with the current controlling operation or operations of the Work for at least five (5) hours per day due to inclement weather, or conditions resulting immediately therefrom.

Working Drawing – Working Drawings detail a particular item of work and the manner in which it is to be accomplished or performed. Working Drawings are prepared by the Contractor as a submittal or a portion of a submittal and may be specifically requested by the City or required in the Contract or a Field Directive or other written directive.

CHAPTER 2 - BID REQUIREMENTS AND CONDITIONS

TABLE OF CONTENTS

Section **Page**
2-1 BID FORM 12
2-2 PREPARATION AND SUBMISSION OF BIDS 13
2-3 EXAMINATIONS OF PLANS, SPECIFICATIONS, AND SITE OF WORK 14
2-4 SUBSURFACE CONDITIONS 14
2-5 CONTRACTORS/SUBCONTRACTORS REQUIRED TO BE LICENSED 14
2-6 COMPETENCY OF BIDDERS 15
2-7 JOINT VENTURE BIDS 15
2-8 SUBCONTRACTORS 15
2-9 ADDENDA 17
2-10 ASSIGNMENT OF ANTITRUST ACTIONS 17
2-11 CERTIFICATION REGARDING DEBARMENT, SUSPENSION, PROPOSED DEBARMENT OR SUSPENSION, AND OTHER RESPONSIBILITY MATTERS 17
2-12 BID GUARANTEE 18
2-13 WITHDRAWAL OF BID 18
2-14 PUBLIC OPENING OF BIDS 19
2-15 REJECTION OF BIDS 19
2-16 DISQUALIFICATION OF BIDDERS. 19
2-17 RELIEF OF BIDDERS 19
2-18 BID PROTESTS 19

CHAPTER 2 BID REQUIREMENTS AND CONDITIONS

2-1 BID FORM

The City will furnish to each prospective Bidder a Bid Form as part of the Contract Documents which, when properly completed and executed, must be submitted as the Bidder's Bid for the Work. All Bids must be submitted on the City-furnished Bid Form to be valid and accepted. Bids that are not submitted on the City-furnished Bid Form will be rejected. The completed Bid Form shall be in English and legible, and shall be properly signed in longhand by the Bidder, if an individual, by a member of a partnership, by an officer of a corporation authorized to sign contracts on behalf of the corporation, or by an agent of the Bidder. If submitted by a corporation or limited liability company, the Bid shall show the name of the state under the laws of which the corporation or limited liability company is chartered or organized.

The Bid shall be made on the Bid Form in clearly legible figures as follows:

2-1.01 Unit Price Bid

Where the Bid for an item of Work is to be submitted on a unit price basis, the Bidder shall bid a unit price as total compensation for completion of one unit of the work described under that item. This price shall be multiplied by the Estimated Quantity included in the Bid Form to derive a total bid price for that item. The total amount bid for a unit price contract shall be entered on the space provided on the Bid Form as a grand total of all individual items. The Estimated Quantities included on the Bid Form are approximate and are only included in the Bid Form as a basis for comparison of Bids. The City does not, expressly or by implication, represent or agree that the actual amount of work will equal the approximate Estimated Quantities. Payment will be made for the actual quantity of Work performed in accordance with the Contract. The City reserves the right to increase or decrease the amount of any class or portion of the Work, or to omit portions of the Work, as may be deemed necessary or advisable in the sole discretion of the City. For compensation for alterations in quantities of work, including deviations greater than twenty-five percent (25%), see Section 9- 8.02, “Payment for Changes – Unit Prices”, of these Specifications.

2-1.02 Lump Sum Bid

Where the Bid for an item of Work is to be submitted on a "Lump Sum" or "Job" basis, a single lump-sum price shall be submitted in the appropriate place on the Bid Form. Items bid on a lump-sum basis shall result in a complete structure, operating plant, or system, in satisfactory working condition with respect to the functional purposes of the installation, as described in the Contract, and no extra compensation will be paid for anything omitted but fairly implied.

2-1.03 Allowances

Where specific allowance items have been entered on the bid form by the City, the total amount entered on the bid form shall be included in the Total Bid Price. However, the total amount to be paid for the Work included in the Allowance shall be the amount of the Allowance actually utilized in the course of completing the Work.

2-2 PREPARATION AND SUBMISSION OF BIDS

The Project is a public works project within the requirements of Division 2, Part 7, Chapter 1 of the California Labor Code. Each Bidder and listed Subcontractor is required to be registered pursuant to Labor Code section 1725.5 at the time of bidding. Failure of the Bidder to be registered at the time of bidding shall render the Bid non-responsive and ineligible for award. An unregistered Subcontractor will not be permitted to work on the Project and Contractor may be required to substitute, at its cost and with no adjustment in the Total Contract Price, an unregistered Subcontractor with a registered Subcontractor.

By submission of a Bid, the Bidder acknowledges acceptance of the nature and location of the Work, the general and local conditions, conditions of the site, the character, quality and scope of work to be performed, the availability of labor, electric power, water, the kind of surface and subsurface materials on the site, the materials and equipment to be furnished, and all requirements of the Contract or other matters which may affect the Work or the cost. Any failure of a Bidder to become acquainted with all of the available information concerning conditions will not relieve the Bidder from the responsibility for estimating properly the difficulties or cost of the Work.

The Bidder declares by the submission of a Bid that the Bid is not made in the interest of, or on behalf of, any undisclosed person, partnership, company, association, organization, or corporation; that the Bid is genuine and not collusive or a sham; that the Bidder has not directly or indirectly induced or solicited any other Bidder to put in a false or sham Bid, and has not directly or indirectly colluded, conspired, connived or agreed with any Bidder or anyone else to put in a sham Bid or to refrain from bidding; that the Bidder has not directly or indirectly sought by agreement, communication, or conference with anyone to fix the Bid price of the Bidder or the Bid price of any other Bidder, or to fix any overhead, profit, or cost element of such Bid price or of that of any other Bidder, or to secure any advantage against the City, anyone interested in the Bid as principal, or those named within the Bid; that all statements contained in the Bid are true; that the Bidder has not directly or indirectly submitted a Bid price or any breakdown thereof or the contents thereof, or divulged information or data relative thereto, to any other corporation, partnership, company, association, organization, bid depository, or to any member or agent therefore, to effectuate a collusive or sham bid, and has not paid, and will not pay, any person or entity for such a purpose.

Any person executing the above declaration on behalf of a Bidder that is a corporation, partnership, joint venture, limited liability company, limited liability partnership, or any other entity hereby represents that he has full power to execute the declaration on behalf of the Bidder.

Bid prices shall include everything necessary for the completion of the Work and fulfillment of the Contract, except as may be provided otherwise in the Contract Documents. Bid prices shall include all Federal, State, and local taxes, and all other fees and costs not expressly paid for by the City as stated in the Special Provisions.

The Bid shall be submitted in a sealed envelope as directed in the Notice to Contractors. The Bidder shall plainly mark the exterior of the envelope in which the Bid is submitted to indicate that it contains a Bid for the project for which the Bid is submitted, and the date of the Bid opening therefore.

Bids submitted in envelopes that are not properly marked will be rejected.

2-3 EXAMINATIONS OF PLANS, SPECIFICATIONS, AND SITE OF WORK

The Bidder shall examine carefully the site of the proposed Work and the Plans, Specifications and Contract Documents, and shall be satisfied as to the character, quality, and quantity of surface and subsurface materials or obstacles to be encountered. The submission of a Bid shall be conclusive evidence that the Bidder is satisfied through the Bidder's own investigation as to the conditions to be encountered; the character, quality, quantity and scope of work to be performed; and the materials and equipment to be furnished.

If material discrepancies or apparent material errors are found in the Plans and Specifications prior to the date of bid opening, an Addendum may be issued (see Section 2-9, "Addenda", below). Otherwise, in figuring the Work, Bidders shall consider that any discrepancies or conflict between Plans and Specifications will be governed by Section 4-1, "Intent of Contract Documents".

2-4 SUBSURFACE CONDITIONS

Where investigations of subsurface conditions have been made by the City with respect to subsurface conditions, utilities, foundation, or other structural designs, and that information is shown in the Plans, it represents only a statement by the City as to the character of materials which have actually been encountered by the City's investigation. This information is only included for the convenience of Bidders.

Investigations of subsurface conditions are made for the purpose of design only. The City assumes no responsibility with respect to the sufficiency or accuracy of borings or of the log of test borings or other preliminary investigations or of the interpretation thereof. There is no guaranty, either expressed or implied, that the conditions indicated are representative of those existing throughout the Work, or any part of it, or that unanticipated conditions may not occur. When a log of test borings is included in the Plans, it is expressly understood and agreed that said log of test borings does not constitute a part of the Contract. The log of test borings represents only an opinion of the City as to the character of the materials to be encountered, and is included in the Plans only for the convenience of the Bidders. Making information available to Bidders is not to be construed in any way as a waiver of the provisions of the first paragraph of this Section, and Bidders must satisfy themselves through their own investigations as to conditions to be encountered.

2-5 CONTRACTORS/SUBCONTRACTORS REQUIRED TO BE LICENSED AND REGISTERED

The Bidder shall be licensed under the provisions of Chapter 9, Division 3, of the Business and Professions Code to do the type of work contemplated in the Project, and shall be skilled and regularly engaged in the general class or type of work called for under the Contract. The specific type of license required will be indicated in the "Notice to Contractors". Unless specified otherwise in the Special Provisions, the Bidder shall indicate the license number and class in the space provided for that purpose on the bid form.

All Subcontractors engaged to perform portions of the Work shall be licensed under the provisions of Chapter 9, Division 3, of the Business and Professions Code to do the type of

work for which they are subcontracted, and shall be skilled and regularly engaged in the genera l class or type of work called for under their subcontracts. Additionally, Subcontractors listed in the Bid shall be licensed at the time the Bid is submitted to do the type of work for which they are subcontracted.

Attention is also directed to the provisions of Public Contract Code Section 20103.5, which addresses Contractor licensing requirements. The City may not award the Contract if it cannot be verified that the low Bidder is an appropriately licensed Contractor at the time of Contract award.

The Contractor, and all Subcontractors, shall be registered pursuant to Labor Code section 1725.5 prior to engaging in the performance of any public work contract that is subject to the requirements of Division 2, Part 7, Chapter 1 of the California Labor Code, and shall maintain current registration throughout the term of this Contract.

2-6 COMPETENCY OF BIDDERS

It is the intention of the City to award a Contract only to a Bidder who furnishes satisfactory evidence that the Bidder has the requisite experience and ability, and has sufficient capital, facilities, and plant to enable the Contractor to prosecute the Work successfully and promptly, and to complete the Work within the time stated in the Contract.

If required by the Bid Form, a statement of experience and business standing for the Bidder and any or all Subcontractors designated in the Bid shall be provided to the City at Bid time. To determine the experience of a Bidder, the City may consider any relevant evidence that the Bidder, and/or its key personnel assigned to the Project for the duration of the Project, and/or the Subcontractor(s) has or has not satisfactorily performed on other contracts of similar nature, value, magnitude and/or difficulty.

2-7 JOINT VENTURE BIDS

If two or more prospective Bidders desire to bid jointly as a joint venture on a single project, the joint venture Bid must be accompanied by either a notarized copy of a valid license issued to the joint venture by the Contractor's State License Board or the license number and class of a valid licensed issued by the Contractor's State License Board to each member of the joint venture.

Attention is also directed to the provisions of Business and Professions Code Sections 7028.15 and 7029.1 and Public Contract Code Section 20103.5, which address Contractor licensing requirements for joint ventures. Unless it has done so with its Bid, the joint venture must provide to the City, prior to award of the Contract, a notarized copy of a valid license issued to the joint venture. The City may not award the Contract if it cannot be verified that the joint venture is appropriately licensed at the time of Contract award.

2-8 SUBCONTRACTORS

In accordance with the Subletting and Subcontracting Fair Practices Act, of the Public Contract Code, Section 4100 et seq., each Bidder shall list in the bid form:

- The name, California contractor license number, and the location of the place of business of each Subcontractor whom the Bidder proposes to perform work or labor or render service to the prime Contractor in or about the construction of the Work, or a Subcontractor licensed by the State of California who, under subcontract to the prime Contractor, is proposed by the Bidder to specially fabricate and install a portion of the Work according to detailed drawings contained in the Contract, in an amount in excess of one-half of one percent (0.5%) of the Total Bid or, in the case of a Bid for the construction of streets or highways, including bridges, in excess of one-half of one percent (0.5%) of the Bidder's Total Bid or ten thousand dollars ($10,000), whichever is greater. In the case of a Bid including additive Alternates, the bid amount for determining whether a Subcontractor is required to be listed shall be the base bid amount, and the Bidder shall list all Subcontractors subject to this requirement even if the Subcontractor only meets the threshold amount based on work included in one or more Alternates.

- The portion of the Work [type of work] that will be done by each Subcontractor. The Bidder shall list only one Subcontractor for each portion as is defined by the Bidder in the Bid.

- DIR Registration number or other proof of registration.

If a Bidder fails to specify a Subcontractor for any portion of the Work to be performed under the Contract (or specifies more than one Subcontractor for the same work), the Bidder agrees that the Bidder is fully qualified and shall perform that portion of the Work.

Within 24 hours following the bid opening date and time, a Bidder may further define its description of the "portion" of work to be performed by a listed Subcontractor, including for example by specifying Bid Items to be performed by a listed Subcontractor, but the Bidder shall not vary the portion of work to be provided to the listed Subcontractor. Bidders who list a Subcontractor for less than all of a type of work as described in the Subcontractor listing in the Bid must provide an additional, unique description of the work to be performed by the listed Subcontractor within 24 hours following the Bid Opening date and time or the Subcontractor will be deemed to have been listed to perform all work falling within the description of work.

No Subcontractor listed in the Bid as furnishing and installing carpeting shall sublet any portion of the labor to be performed unless the Subcontractor specified its Subcontractor in its bid to the Bidder.

If after the award of the Contract, the Contractor subcontracts any portion of the Work, except as provided in Section 4107 or 4109 of the Act, the Contractor shall be subject to the penalties specified in Section 4111 of the Act.

Pursuant to Public Contract Code Section 6109, a Contractor may not perform work with a Subcontractor who is ineligible to perform work on public works projects pursuant to Labor Code Section 1777.1.

The Contractor shall include provisions in every subcontract and/or purchase order that the Contract between the Contractor and the City is part of the subcontract or purchase order, and that all terms and provisions of the Contract are incorporated in the subcontract or purchase

order. Copies of all subcontracts and purchase orders shall be available to the City upon written request.

2-9 ADDENDA

The correction of any material discrepancies in, or material additions to/omissions from, the Plans, Specifications, or other Contract Documents, or any interpretation thereof, during the bidding period will be made only by an Addendum issued by the City. A copy of each Addendum issued by the City will be posted on the City's website and notice will be provided to each plan holder listed on the City plan holder list and is a part of the Contract. Any interpretation or explanation not included in the addenda will not be considered binding.

2-10 ASSIGNMENT OF ANTITRUST ACTIONS

The Bidder is required to comply with Public Contract Code Section 7103.5(b), which addresses assignment of antitrust actions.

2-11 CERTIFICATION REGARDING DEBARMENT, SUSPENSION, PROPOSED DEBARMENT OR SUSPENSION, AND OTHER RESPONSIBILITY MATTERS

As stipulated in the Certification Regarding Debarment, Suspension, Proposed Debarment or Suspension to be submitted a Bid time, the Bidder certifies, to the best of its knowledge and belief, except as expressly disclosed the referenced Certificate, that:

1. The Bidder and/or any of its Principals:

    a. Are not presently debarred, suspended, proposed for debarment or suspension, or declared ineligible for award of the contract by any Federal, State, or local agency.

    b. Have not, within a three-year period preceding this offer, been convicted of or had a civil judgment rendered against them for: commission of fraud or a criminal offense in connection with obtaining, attempting to obtain, or performing a public (Federal, State or local) contract or subcontract; violation of Federal or State antitrust statutes relating to the submission of offers; or commission of embezzlement, theft, forgery, bribery, falsification or destruction of records, making false statements, tax evasion, or receiving stolen property.

    c. Are not presently indicted for, or otherwise criminally or civilly charged by a government entity with, commission of any of the offenses enumerated in Item 1b. above.

    d. The Bidder has not, within a three-year period preceding this offer, had one or more contracts terminated for default by any Federal, State, or local agency.

2. "Principals," for the purposes of this certification, means: officers; directors; owners; partners; and, persons having primary management or supervisory responsibilities within a business entity (e.g., general manager; plant manager;

head of a subsidiary, division, or business segment, and similar positions).

3. The Bidder shall provide immediate written notice to the City if, at any time prior to contract award, the Bidder learns that its certification was erroneous when submitted or has become erroneous by reason of changed circumstances.

4. A certification that any of the items in Paragraph 2-11-1 of this provision exists will not necessarily result in withholding of an award. However, the certification will be considered in connection with a determination of the Bidder's responsibility. Failure of the Bidder to furnish a certification or provide such additional information as requested by the City may render the Bidder non-responsible or nonresponsive.

5. A Bidder must disclose those exceptions within the scope of the certification which are known to it, or which could be determined from a reasonable inquiry. Nothing contained in the foregoing shall be construed to require establishment of a system of records in order to render, in good faith, the required certification. The knowledge and information of a Bidder is not required to exceed that which is normally possessed by a prudent person in the ordinary course of business dealings.

6. The above-described certification is a material representation of fact upon which reliance will be placed when making the award, if and when made. If it is later determined that the Bidder knowingly rendered an erroneous certification, in addition to other remedies available to the City, the City may terminate the contract resulting from this solicitation for default.

If the Bidder has any exceptions to the certification set forth above, the exception and an explanation of the circumstances must be attached to the Bid.

2-12 BID GUARANTEE

The Bid shall be accompanied by a Bid Guarantee in the form of cash, a certified check, a cashier’s check, or a bidder’s bond issued in favor of the City and provided by a surety company authorized to do business in the State of California and listed in the current Federal Department of Treasury Circular 570. The Bid Guarantee shall be not less than ten percent (10%) of the Total Bid Price. No Bid will be considered unless accompanied by a Bid Guarantee. The City is authorized to forfeit such Bid Guarantee as necessary to reimburse for costs incurred for failure of the successful Bidder to enter into a contract. The amount of the Bid Guarantee shall not be deemed to constitute a penalty or liquidated damages. The City is not precluded by a Bid Guarantee from recovering from the defaulting Bidder damages in excess of the amount of said Bid Guarantee incurred as a result of the failure of the successful Bidder to enter into a contract with the City for the Work.

2-13 WITHDRAWAL OF BID

A Bid may be withdrawn at any time prior to the hour fixed in the Notice to Contractors for the submission of Bids by a written request of the Bidder filed with the City at the location where the Bid was submitted. The withdrawal of a Bid will not prejudice the right of a Bidder to file a new Bid within the time prescribed.

2-14 PUBLIC OPENING OF BIDS

Bids will be opened and read publicly at the time and place indicated in the Notice to Contractors or in a subsequent Addendum. Bidders or their authorized representatives and other interested parties are invited to be present.

2-15 REJECTION OF BIDS

The City reserves the right to reject any or all Bids. The City reserves the right to waive irregularities in a Bid and to make an award in the best interest of the City. Bids containing omissions, erasures, alterations, conditions, or additions not called for may be rejected.

2-16 DISQUALIFICATION OF BIDDERS.

More than one Bid from any individual, firm, partnership, corporation, limited liability company association, or joint venture under the same or different names, will not be considered. Reasonable ground for believing that any Bidder is interested in more than one Bid for the Work will cause rejection of all Bids in which such Bidder is interested. This prohibition shall not prevent any proposed Subcontractor from being listed in more than one Bid. This prohibition shall not prevent Bids by Bidders with partial ownership in common unless the two Bidders have identified the same individual as their responsible managing employee, member, manager or officer. If there is reason to believe that collusion exists among Bidders, none of the participants of such collusion will be considered.

Any Bid in which the prices obviously are unbalanced may be rejected.

2-17 RELIEF OF BIDDERS

Attention is directed to Public Contract Code Sections 5100 through 5107, concerning relief of Bidders and in particular to the requirement therein that if the Bidder claims a material mistake was made in its Bid, the Bidder shall give the City written notice within five (5) days after the opening of the Bids (excluding Saturdays, Sundays, or Legal Holidays) of the alleged mistake, explaining in the notice in detail how the mistake occurred.

2-18 BID PROTESTS

If the Bidder believes that any provision in the solicitation for Bids is vague, ambiguous, conflicting or contrary to law, then the Bidder shall promptly bring its concern to the City by written notice specifying the provision(s) in question and the factual and legal bases for concern. Failure of the Bidder to raise any concern relating to a solicitation requirement within at least two (2) working days prior to the Bid due date will be deemed a waiver of the Bidder's right to protest based on alleged vague, ambiguous, conflicting or unlawful requirements in the solicitation.

As set forth in the "Resolution of Disputes Regarding the Bidding Process," any Bidder may file a protest against the award of the Contract to any other Bidder. In submitting a bid to the City, the Bidder agrees to comply with and to be bound by that procedure, as summarized below.

No later than five (5) calendar days after Bids are opened, the Bidder must submit in writing to the City an explanation of all legal and factual grounds for any protest. These requirements are to be strictly construed. Untimely protests and/or grounds not set forth in the protest will not be considered. Failure to timely protest or otherwise comply with the protest requirements will constitute a waiver of the right to challenge and forever bar the Bidder from challenging, whether before the City or any administrative or judicial tribunal, any particular Bid(s), the bidding process, or the Contract award on any ground not set forth in the protest. Upon receipt of a protest, the City will provide a copy to any Bidder whose Bid is challenged in the protest.

If a timely written protest is provided to the City at least two (2) business days before any City Council meeting at which the award of the Contract will be considered, then the City shall make reasonable efforts to provide the protesting Bidder with a written response to the protest prior to the City Council meeting. A copy of any City response will be provided to any other Bidder responding to the protest.

Notice of the date and time of the City Council meeting at which the award of the Contract for the Project shall be considered will be posted on the City's website.

CHAPTER 3 - AWARD AND EXECUTION OF CONTRACT

TABLE OF CONTENTS

Section **Page**

3-1 AWARD OF CONTRACT 22
3-2 TIME OF AWARD 22
3-3 CONSIDERATION OF BIDS 22
3-4 PERFORMANCE AND PAYMENT BONDS 23
3-4.01 Performance Bond 23
3-4.02 Payment Bond 23
3-5 NOTIFICATION OF SURETY COMPANIES 23
3-6 RETURN OF BID GUARANTEES 24
3-7 EXECUTION OF CONTRACT 24
3-8 FAILURE TO EXECUTE CONTRACT 24
3-9 INSURANCE 25
3-9.01 General Liability 25
3-9.02 Automobile Liability 26
3-9.03 Workers' Compensation 26
3-9.04 Excess or Umbrella Liability 26
3-9.04.A Contractor’s Equipment 26
3-9.04.B Railroad Protective Liability 26
3-9.04.C Builder’s Risk Insurance 27
3-9.04.D Environmental Liability Insurance 28
3-9.04.E Other Provisions 28
3-9.05 Notification of Accident or Occurrence 30
3-9.05 Notification of Claim 31

CHAPTER 3 AWARD AND EXECUTION OF CONTRACT

3-1 AWARD OF CONTRACT

The award of the Contract, if the Contract is to be awarded, will be to the lowest responsive, responsible Bidder. In addition to price in determining the lowest responsive, responsible Bidder, consideration will be given to:

- The ability, capacity and skill of the Bidder to perform the Work;
- The ability of the Bidder to perform the Work within the time specified, without delay;
- The ability of the Bidder to perform the Work in a safe manner;
- The character, integrity, reputation, judgment, experience and efficiency of the Bidder; and,
- The quality of the Bidder's performance on previous work with the City.

Unless otherwise specified in the Special Provisions, if an alternate or alternates are identified by the City to the bidders, award will be based on any combination of Base Bid and Alternates as determined by the City. This process is conducted by the City in a “blind selection” format, *i.e*., without knowledge of the identity of any of the Bidders before ranking of all Bidders from lowest to highest has been determined. Bidders are to submit their Bid in two sealed envelopes, both containing all identifying information for the Project, and both of which are then to be included in a third sealed envelope containing all identifying information for the Project, but without any identifying information regarding the Bidder. The first envelope shall be marked “Envelope 1” and shall contain only an unsigned copy of the bidder’s bid form, without any identifying information for the bidder and without any other required bid submissions. The second envelope shall be marked “Envelope 2” and shall contain a complete copy of all required bid documents, including a signed copy of the bid form. Any discrepancies in the pricing information in the two sealed envelopes may render the bid nonresponsive. Alternates may be selected for award by the Council at its discretion. All awards will be made in the City’s best interest.

3-2 TIME OF AWARD

The award, if made, will be made within sixty (60) days after the Bid Opening, unless otherwise specified. The period for contract award shall be tolled while any protest of an intended award is pending. The specified period of time within which the award of the Contract may be made may be extended as agreed upon in writing by the City and the Bidder before the last day specified in the solicitation for award.

If the lowest responsive, responsible Bidder refuses or fails to execute the Contract, or to provide required bonds and/or insurance certificates, the City may award the Contract to the second lowest responsive, responsible Bidder. If the second lowest responsive, responsible Bidder refuses or fails to execute the Contract or to provide required bonds and/or insurance, the City may award the Contract to the third lowest responsive, responsible Bidder.

3-3 CONSIDERATION OF BIDS

After the Bids have been opened and read, they will be checked for accuracy and compliance with the Specifications. In the event that the product of a unit price and an estimated quantity does not equal the extended amount quoted, the unit price shall govern and

the correct product of the unit price and the estimated quantity shall be deemed to be the amount bid. If the sum of two or more items in a bidding schedule or the sum of two or more bidding schedules does not equal the total amounts quoted, the individual item or schedule amounts shall govern and the correct total shall be deemed to be the amount bid. If the Bid is missing the unit price, then it may be deemed incomplete and the Bid may be rejected.

After the City has made any necessary corrections in mathematical errors appearing on the face of the Bid, all Bids will be compared based on the bid form.

3-4 PERFORMANCE AND PAYMENT BONDS

As part of the execution of the Contract, the successful Bidder shall furnish the following corporate surety bonds to the benefit of the City. The format of the Performance Bond and Payment Bond forms shall be those contained in the Invitation for Bids. Bonds shall be executed by a surety company authorized to do business in the State of California and listed in the current Federal Department of Treasury Circular 570. The successful Bidder must submit with the bonds the original, or a certified copy, of the unrevoked appointment, power of attorney, bylaws or other instrument entitling or authorizing the person who executed the bond to do so.

When the amount to be paid to the Contractor is based upon units of work to be performed or items to be provided, the term “Total Contract Price” as used below for the purpose of posting Performance and Payment Bonds shall be computed on the basis of the unit price bid multiplied by the Estimated Quantities of work to be performed.

3-4.01 Performance Bond

The Performance Bond, to guarantee the performance of all covenants and stipulations of the Contract, shall be on the form provided by the City and shall be in a sum not less than one hundred percent (100%) of the original Total Contract Price as set forth in the Contract.

3-4.02 Payment Bond

The Payment Bond, to guarantee the payment of wages and of bills contracted for materials, supplies, or equipment used in the performance of the Contract, shall be on the form provided by the City and shall be in a sum not less than one hundred percent (100%) of the original Total Contract Price as set forth in the Contract.

3-5 NOTIFICATION OF SURETY COMPANIES

The surety company shall be familiar with all the provisions and conditions of the Contract. It is understood and agreed that the surety company waives notice of change, extension of time, alteration or addition to the terms of the Contract or to the work to be performed thereunder or to the specifications accompanying the same, or any other act or acts by the City or the City’s authorized agents under the terms of the Contract; and failure to so notify the surety company of changes shall in no way relieve the surety company of its obligations under the Contract. Any alteration or alterations made in any provision of this Contract shall not operate to release any surety from liability on any bond required hereunder and the consent to make such alterations is hereby given, and any surety on said bonds hereby waives the provisions of Section 2819 of the Civil Code.

3-6 RETURN OF BID GUARANTEES

After Bids have been received and reviewed by the City, Bid Guarantees will be returned to the respective Bidders except those submitted by the three lowest responsive, responsible Bidders.

Bid Guarantees for Bids not to be further considered in executing the Contract will be returned within ten (10) days after the award of the Contract. The Bid Guarantees of the three lowest responsive, responsible Bidders will be returned within ten (10) days after the successful Bidder has filed satisfactory bonds and proof of insurance as specified and the Bidder and the City have executed the Contract.
If all Bids are rejected and no award is made, all Bid Guarantees will be returned within ten (10) days of the decision of the Council to not award the Contract.

3-7 EXECUTION OF CONTRACT

The Contract shall be executed by the successful Bidder and returned to the City, together with the Performance Bond, Payment Bond, certificates of insurance and insurance endorsements, and any other documents required at the time of Contract execution by the Special Provisions within ten (10) days of the Bidder's receipt of the documents. Insurance certificates shall be signed by a person authorized by the insurer to bind coverage on its behalf and shall be accompanied by copies of all endorsements required by Section 3-9 below.

When requested by the City, the successful bidder shall furnish complete, certified copies of all required insurance policies, including endorsements specifically required by Section 3-9. After execution by the City, one copy of the Contract, bonds, and certificates of insurance will be returned to the Contractor.

3-8 FAILURE TO EXECUTE CONTRACT

If the Bidder to whom the Contract is awarded fails to execute the Contract and file acceptable bonds and insurance certificates as provided herein within ten (10) days from the time the Contract forms are received by the Bidder, the award may be annulled and the Bidder's Bid Guarantee forfeited to the City. At the City's discretion, the Contract may then be awarded to the next lowest responsive, responsible Bidder.

If the City awards the Contract to the second lowest responsive, responsible Bidder, the amount of the lowest responsive, responsible Bidder's Bid Guarantee shall be applied by the City to the difference between the lowest Bid and the Bid of the second lowest responsive, responsible Bidder, and the surplus, if any, will be returned to the lowest responsive, responsible Bidder if a check or cash is used, or credited to the surety on the Bidder's Bond if a bond is used.

On refusal or failure of the second lowest responsive, responsible Bidder to execute the Contract, the City may award it to the third lowest responsive, responsible Bidder. If the City awards the Contract to the third lowest responsive, responsible Bidder, in addition to application of the lowest Bidder's Bid Guarantee as aforesaid, the amount of the second lowest responsive, responsible Bidder's Bid Guarantee shall be applied by the City to the difference between the Bid of the second lowest responsive, responsible Bidder and the Bid of

the third lowest responsive, responsible Bidder, and the surplus, if any, shall be returned to the second lowest responsive, responsible Bidder if a check or cash is used, or credited to the surety on the second lowest Bidder's Bid Bond if a bond is used.

Additionally, any forfeited Bid Guarantee shall be applied as necessary to reimburse for the costs incurred for failure of the successful Bidder(s) to enter into a contract. The surplus, if any, will be returned to the defaulting Bidder(s), if a check or cash is used, or credited to the surety on the Bidder's Bond, if a bond is used.

The amount of the Bid Guarantee shall not be deemed to constitute a penalty or liquidated damages. The liability of the Surety shall not exceed the limits of the bid bond amount.

3-9 INSURANCE

The Contractor shall procure, maintain, and keep in force at all times during the term of the Contract in insurance companies acceptable to the City, at the Contractor's sole expense, the following insurance:

3-9.01 General Liability

General Liability insurance including, but not limited to, protection for claims of bodily injury and property damage liability, personal and advertising injury liability, contractual liability applicable to the Contractor's assumed liability under the Contract, and products and completed operations liability. Coverage shall be at least as broad as "Insurance Services Office Commercial General Liability Coverage Form CG 0001" (occurrence). The limits of liability shall be not less than:

Each Occurrence	Two Million Dollars ($2,000,000) combined single limits for Bodily Injury and Property Damage
Personal and Advertising Injury	One Million Dollars ($1,000,000)
Products and Completed Operations Aggregate	One Million Dollars ($1,000,000) combined single Limits for Bodily Injury and Property Damage
General Aggregate	Four Million Dollars ($4,000,000) combined single limits for Bodily Injury and Property Damage
Fire Damage	One Hundred Thousand Dollars ($100,000)

The policy shall provide coverage for claims arising out of subsidence.

The Contractor shall procure and maintain Products and Completed Operations Coverage with a carrier acceptable to the City through the expiration of the patent deficiency in the statute of repose set forth in the Code of Civil Procedure section 337.1.

3-9.02 Automobile Liability

Automobile Liability insurance providing protection against claims of bodily injury and property damage arising out of ownership, operation, maintenance, or use of owned, hired, and non-owned automobiles. Coverage shall be at least as broad as “Insurance Services Office Business Auto Coverage Form CA 0001,” symbol 1 (any auto). The limits of liability shall not be less than:

Bodily Injury and Property Damage Combined Single Limit	One Million Dollars ($1,000,000)

3-9.03 Workers' Compensation

Workers' Compensation insurance, with coverage as required by the State of California (unless the Contractor is a qualified self-insurer with the State of California), and Employers’ Liability coverage. The limits of Employers’ Liability shall not be less than:

Each Accident	One Million Dollars ($1,000,000)
Disease Each Employee	One Million Dollars ($1,000,000)
Disease Policy Limit	One Million Dollars ($1,000,000)

The Workers’ Compensation policy required hereunder shall be endorsed to state that the Workers’ Compensation carrier waives its right of subrogation against the City, its officers, officials, employees, agents or volunteers.

In the event the Contractor is self-insured, the Contractor shall furnish a Certificate of Permission to Self-Insure by the Department of Industrial Relations Administration of Self-Insurance, Sacramento. Contractor shall provide evidence of waiver of its right of subrogation against the City, its offices, officials, employees, agents or volunteers as a self-insurer.

3-9.04 Excess or Umbrella Liability

If the Special Provisions require limits of insurance greater than those specified in the General Provisions, the Contractor shall maintain excess or umbrella liability insurance providing excess coverage at least as broad as the underlying coverage for General Liability, Automobile and Employer’s Liability with a limit equal to the amount stated in the Special Provisions per occurrence and aggregate.

3-9.04.A Contractor’s Equipment

The Contractor, and each of its Subcontractors, shall separately insure its own equipment for loss and damage. The Contractor’s Property and Inland Marine policies shall include, or be endorsed to include, a waiver of subrogation against the City, its officers, officials, employees, agents, and volunteers which might arise by reason of damage to the Contractor’s property or equipment (owned, leased or borrowed) in connection with work performed under this Contract by the Contractor.

3-9.04.B Railroad Protective Liability

When stated as a requirement in the Special Provisions, the Contractor shall procure,

maintain, and keep in force at all times during the term of the Contract, at the Contractor's sole expense, Railroad Protective Liability insurance with limits of liability as set forth in the Special Provisions.

3-9.04.C Builder's Risk Insurance

When stated as a requirement in the Special Provisions, the Contractor shall procure, maintain, and keep in force at all times during the term of the Contract and until the date of transfer of the insurable interest to and acceptance by the City, at the Contractor's sole expense, Builder's Risk insurance with limits of liability equal to one hundred percent (100%) of the full replacement cost of the Work.

1. Coverage shall be written on a Replacement Cost basis without application of coinsurance and shall cover the Project sites against losses included in perils usually included in a "Special Form" policy format in addition the policy shall include:

    a. Earthquake and Land Movement and Flood.

    b. Loss that ensues from design error, defective materials, or faulty workmanship.

    c. Mechanical breakdown or electrical damage, including testing, magnetic disturbance and changes in temperature or humidity disturbance, and changes in temperature or humidity.

    The property covered shall include the Work, including any materials, equipment, or other items to be incorporated therein while the same are located at the construction site, stored off site, while in transit or at the place of manufacture. In addition, the policy shall cover collapse, falsework, temporary buildings and debris removal including demolition occasioned by enforcement of any applicable legal requirements, and shall cover reasonable compensation for architects, engineers and other design professionals required as a result of such insured loss. The policy shall contain a provision that the interests of the City and the Contractor, Subcontractors and material suppliers are insureds under the policy and that any loss shall be payable to the insureds as their interests may appear.

    When stated as a requirement in the Special Provisions, Builder's Risk Insurance shall include Delay in Opening coverage with limits of liability, and for the period of time, as set forth in the Special Provisions. Coverage shall include debt service, expense, loss of earnings or rental income or other loss incurred by the City, without deduction, due to the failure of the Project being completed on schedule.

2. The maximum deductible for earthquake, land movement and flood allowable under this policy shall be five percent (5%) of replacement value at risk at the time loss. A one hundred thousand dollars ($100,000) minimum is acceptable. The maximum deductible for all other perils allowable under this policy shall be ten thousand dollars ($10,000). All deductibles shall be borne solely by the

Contractor, Subcontractors, or material suppliers, and the City shall not be responsible to pay any deductible, in whole or in part.

3. The City and the Contractor waive all rights against each other and against all other contractors for loss or damage to the extent reimbursed by Builder's Risk insurance or any other property or equipment insurance applicable to the Work, except such rights as they may have to the proceeds of such insurance. If the policies of insurance referred to in this section require an endorsement or consent of the insurance company to provide for continued coverage where there is a waiver of subrogation, the owners of such policies will cause them to be so endorsed to obtain such consent.

4. If not covered by Builder's Risk insurance or any other property or equipment insurance required by this Contract, the Contractor shall procure, maintain, and keep in force at all times during the term of the Contract, at the Contractor's sole expense, property insurance for portions of the Contractor's work and/or equipment to be incorporated therein stored offsite or in transit.

3-9.04.D Environmental Liability Insurance

When stated as a requirement in the Special Provisions, the Contractor shall procure, maintain, and keep in force at all times during the term of the Contract, at the Contractor's sole expense, Environmental Liability insurance, using an occurrence form (Claims Made forms at not acceptable unless expressly allowed by the City), which includes coverage for sudden and accidental pollution arising out of the handling of hazardous materials or hazardous wastes; non-hazardous materials or non-hazardous wastes that, when released into the environment, violate regulatory standards of the Federal, State or Local Government; and coverage for liability arising out of the handling of asbestos.

If coverage for Environmental Liability insurance is allowed by the City to be written on a claims-made form, the following provisions apply:

Limit of coverage shall be not less than ten million dollars combined single limits for Bodily Injury and Property Damage ($10,000,000).

Insurance must be maintained and evidence of insurance must be provided for at least four (4) years after completion of the Work. Additional provisions, including Project specific coverage may be required at the sole discretion of the City.

3-9.04.E Other Provisions

1. The Contractor's General Liability, Automobile Liability, and any Excess or Umbrella Liability or other insurances required in the Special Provisions, shall contain the following provisions:

    a. The City, its officers, officials, employees, agents, and volunteers shall be covered as additional insureds as respects liability arising out of the activities performed by or on behalf of the Contractor, products and completed operations of the Contractor, premises owned, occupied, or used by the Contractor, or automobiles owned, leased, hired, or

borrowed by the Contractor. The policy shall contain no special limitations on the scope of coverage afforded to the City, its officers, officials, employees, agents, or volunteers.

b. For any claims related to this Contract, the Contractor's insurance coverage shall be primary insurance as respects the City, its officers, officials, employees, agents, or volunteers. Any insurance or self-insurance maintained by the City, its officers, officials, employees, agents, or volunteers shall be excess of the Contractor's insurance and shall not contribute with it.

c. Any failure to comply with reporting or other provisions of the policies on the part of the Contractor, including breaches of warranties, shall not affect coverage provided to the City, its officers, officials, employees, agents, or volunteers.

2. The Contractor's General Liability and any Excess or Umbrella Liability insurance policies shall contain an endorsement stating that any aggregate limits shall apply separately to the Work.

3. The Contractor’s insurance shall apply separately to each insured against whom claim is made or suit is brought, except with respect to the limits of the insurer’s liability.

4. Each insurance policy by endorsement or provision shall state that coverage shall not be suspended, voided, cancelled, reduced in scope of coverage or in limits, non-renewed, or materially changed unless the insurer(s) provide thirty (30) Calendar Days written notice by certified mail to the City prior to such change. Ten (10) Calendar Days prior written notice by certified mail shall be given to the City in the event of cancellation due to nonpayment of premium.

5. All of the Contractor's insurance coverage, except as noted below, shall be placed with insurance companies with a current A.M. Best rating of at least A-IX.

   Exception: Workers' Compensation which is provided through a State Compensation Insurance Fund or a qualified self-insurer for Workers' Compensation under California law.

6. The Contractor shall sign and file with the City the following certification prior to commencing performance of the work of the Contract:

   “I am aware of the provisions of Section 3700 of the Labor Code which require every employer to be insured against liability for worker’s compensation or to undertake self-insurance in accordance with the provisions of the Code, and I will comply with such provisions before commencing the performance of the Work of this Contract.”

   Said certification is included in the Contract, and signature and return of the Contract shall constitute signing and filing of the said certification.

7. The City, at its discretion, may require new types of insurance coverage or increase the limits of insurance coverage required hereunder at any time during the term of the Contract by giving thirty (30) Calendar Days written notice to the Contractor. Contractor shall immediately procure such insurance or increase the limits of coverage and provide certificates of insurance, including copies of all required endorsements, to the City within thirty (30) Calendar Days of receipt of the City's request.

8. The required insurance coverage shall be subject to the approval of the City, but any acceptance of insurance certificates by the City shall in no way limit or relieve the Contractor of its duties and responsibilities in this Contract.

9. If the Contractor fails to procure or maintain insurance as required by this Section 3-9 and each of its subsections and any Special Provisions, or fails to furnish the City with proof of such insurance, the City, at its discretion, may procure any or all such insurance. Premiums for such insurance procured by the City shall be deducted and retained from any sums due the Contractor under the Contract. Failure of the City to obtain such insurance shall in no way relieve the Contractor from any of the Contractor's responsibilities under the Contract. Any failure of the Contractor to maintain any item of the required insurance is sufficient cause for termination of the Contract as a material breach.

10. The making of progress payments to the Contractor shall not be construed as relieving the Contractor of responsibility for loss or damage, or destruction occurring prior to final acceptance by the City. Partial payment does not constitute partial acceptance.

11. The City is authorized to execute amendments and waivers, with or without conditions, to the insurance requirements of the Contract. The City will provide such amendments or waivers in writing to the Contractor.

12. The Contractor is responsible for the acts and omission of all of its Subcontractors and shall require all of its Subcontractors to maintain adequate insurance.

The failure of the City to enforce in a timely manner any of the provisions of this Section 3-9 and/or any of its subsections shall not act as a waiver to enforcement of any of these provisions at any time during the term of the Contract.

3-9.04.F Deductibles and Self-Insurance Retention

Any deductible or self-insured retention over $10,000 that applies to General Liability or Automobile Liability must be declared to and approved by the City.

3-9.05 Notification of Accident or Occurrence

The Contractor shall report by telephone to the City within twenty-four (24) hours and also report in writing to the City within fifteen (15) Calendar Days after the Contractor or any

Subcontractors or agents have knowledge of any accident or occurrence involving death of or injury to any person or persons, or damage in excess of ten thousand dollars ($10,000) to the Work, property of the City or others, arising out of any work done by or on behalf of the Contractor as part of the Contract. Such report shall contain:

1. The date and time of the occurrence,

2. The names and addresses of all persons involved, and

3. A description of the accident or occurrence and the nature and extent of injury or damage.

3-9.05 Notification of Claim

If any claim for damages is filed with the Contractor or if any lawsuit is instituted against the Contractor, that arises out of or is in any way connected with the Contractor's performance under this Contract and that in any way, directly or indirectly, contingently or otherwise, affects or might reasonably affect the City, Contractor shall give prompt and timely notice thereof to the City. Notice shall be prompt and timely if given within thirty (30) Calendar Days following the date of receipt of a claim or ten (10) Calendar Days following the date of service of process of a lawsuit.

CHAPTER 4 - SCOPE OF WORK

TABLE OF CONTENTS

Section **Page**
4-1 INTENT OF CONTRACT DOCUMENTS 33
4-2 PLANS AND SPECIFICATIONS FURNISHED 34
4-3 CONFORMANCE WITH CODES AND STANDARDS 34
4-4 SUPPLEMENTAL DRAWINGS 34
4-5 FIELD DIRECTIVES OR OTHER WRITTEN DIRECTIVES 35
4-6 DOCUMENT PRECEDENCE 35
4-7 REQUESTS FOR INFORMATION 37
4-7.01 General 37
4-7.02 Procedure 37
4-7.03 Response 37
4-8 DELETED ITEMS 38
4-9 EXTRA WORK 38
4-10 USE OF COMPLETED PORTIONS 38
4-11 LANDS AND RIGHTS-OF-WAY 38
4-12 WARRANTY 39

CHAPTER 4 SCOPE OF WORK

4-1 INTENT OF CONTRACT DOCUMENTS

The Work shall be performed and completed according to the Contract Documents. The Contract Documents provide the details for completing the Work in accordance with the terms of the Contract. Each Contract Document is an integral part of the Contract, and a requirement occurring in one is as binding as though occurring in all. The Contract Documents shall be interpreted as being explanatory and complementary in requiring complete Work ready for use and occupancy or operation in satisfactory working condition with respect to the functional purposes of the installation.

The Contractor shall do all of the work and furnish all materials, supplies, equipment, tools, labor, transportation, supervision, resources, and everything else necessary or proper, except as otherwise herein expressly stipulated, necessary or proper for performing and completing the Work herein required, including any Change Order work or disputed work directed by the City in conformity with the true meaning and intent of the Plans, Specifications, and all provisions of the Contract, within the time specified.

All work shown on the Plans, the dimensions of which are not figured, shall be accurately followed to the scale to which the drawings are made; however, figured dimensions shall in all cases be followed, even if they differ from scaled measurements. Full-size drawings shall be followed in the execution of the Work.

If the Contract does not specifically allow the Contractor a choice of quality or cost of items to be furnished, but could be interpreted to permit such a choice, the Contractor shall furnish the highest quality under current industry standards, regardless of the cost of the item.

Unless otherwise specified, the Contractor agrees to furnish all materials, supplies, equipment, tools, labor, transportation, supervision, resources, and everything else necessary to perform and complete the Work in a good and workmanlike manner to the satisfaction of the City, in the manner designated, and in strict conformity to the Contract. When portions of the Work are described in general terms, but not in complete detail, it is understood that the Contractor will employ only the best general practice and incorporate only the best quality materials and workmanship in the Work.

No extra compensation will be allowed for anything omitted but fairly implied. The prices paid for the various items will include full compensation for furnishing all materials, supplies, equipment, tools, labor, transportation, supervision, resources, incidentals and everything else necessary to complete the Work as provided in the Contract. The prices paid include all overhead, markups and profit.

If the Contractor discovers any discrepancies during the course of the Work between the Plans and conditions in the field, or any errors or omissions in the Plans and conditions in the field, or any errors or omissions in the Plans, the Specifications, or in the layout given by stakes, points, or instructions, it shall be the Contractor's duty to inform the City immediately, and the City shall promptly verify the same. Any work done after such discovery, until authorized by the City, will be done at the Contractor's risk.

4-2 PLANS AND SPECIFICATIONS FURNISHED

The City will provide, at no cost to the Contractor, copies of Project Plans (except Standard Drawings or State Plans), Project Specifications (the State Specifications), and Special Provisions, and the fully executed Contract for the Contractor's use in prosecuting the Work. The total number of copies of the Plans, Specifications, and Special Provisions provided shall equal the total of the prime Contractor plus the number of Subcontractors listed in the Bid. The Contractor may purchase additional copies of Plans, Specifications, and Special Provisions.

The Contractor shall retain an approved set of Contract documents on the job during the progress of the Work. This set shall be used by the Contractor as the Record Drawings as described in Section 11-3, "Record Drawings" of these General Provisions.

4-3 CONFORMANCE WITH CODES AND STANDARDS

The Work shall be in full compliance with the latest adopted edition of the following applicable standards and regulations:

- The State Fire Marshal
- The UBC
- Title 8
- Title 22
- Title 24
- The NEC
- The UPC
- Storm Water Pollution Plans and Standards
- Other codes, laws or regulations applicable to the Work or the Contract.

Nothing in the Contract is to be construed to permit work not conforming to these requirements. When the Work detailed in the Plans and Specifications differs from governing codes, the Contractor shall complete the Work in accordance with the higher standard. If the higher standard is more expensive than the Work detailed in the Plans and Specifications, the Contractor will be compensated for the Contractor's additional costs by Contract Change Order as provided in Chapter 9, "Changes and Claims", of these General Provisions.

4-4 SUPPLEMENTAL DRAWINGS

In addition to the Plans incorporated in the Contract at the time of signing, the City may furnish Supplemental Drawings as necessary to clarify or define in greater detail the intent of the

Contract. In furnishing such Supplemental Drawings, the City may make minor changes in the Work, not involving extra cost and not inconsistent with the nature of the Work. The Supplemental Drawings shall become a part of the Contract.

4-5 FIELD DIRECTIVES OR OTHER WRITTEN DIRECTIVES

The City may issue Field Directives or other written directives from the office or field during the course of the Work, and the Contractor shall immediately comply with the Field Directive or other written directive. Contractor must perform all work directed by a field directive, whether or not Contractor believes the work is included in the Contract and regardless of any disputes regarding money, time and/or other issues. Contractor acknowledges that continued progress of the Work is of high importance and that such disputes can be resolved as the Work progresses.

A Field Directive or other written directive may be used to add, delete, modify, or reject work, to note deficiencies in work, to clarify the Contract or to order work to be performed. Work required by a Field Directive or other written directive shall be in accordance with the Contract and any previously executed Change Orders, except as delineated otherwise in the directive. Drawings included with Field Directives or other written directives are part of the Contract and shall be incorporated into the Record Drawings.

If the Contractor refuses or neglects to comply with or make progress in the execution of any Field Directive or other written directive, the City, in addition to all other rights under the Contract and/or applicable law, may employ any person or persons to perform such work at Contractor's cost, and the Contractor shall not interfere with the person or persons so employed.

At appropriate intervals, Field Directives and/or other written directives that alter the Contract may be grouped to form a Change Order as described in Chapter 9, "Changes and Claims" of these General Provisions.

4-6 DOCUMENT PRECEDENCE

The component Contract Documents are intended to provide explanation for each other. Any work shown on the Plans and not in the Specifications, or vice versa, is to be executed as if indicated in both. In case of conflict in the Contract, the following order of precedence will govern interpretation of the Contract:

1. Permits from other agencies as may be required by law;
2. The Agreement, as amended by Change Orders and any other Contract amendments;
3. Special Provisions;
4. Technical Specifications;
5. Plans and Drawings;
6. General Provisions and General Requirements;

7. Invitation for Bids [Notice to Contractors], including attachments and addenda;

8. City of Rocklin Construction Standard Specifications;

9. City of Rocklin Improvement Standards;

10. State of California Department of Transportation Standard Plans and Specifications.

In addition, the following shall also apply:

1. Written numbers and notes on a drawing shall govern over graphics.

2. A detail drawing governs over a general drawing.

3. A detail specification governs over a general specification.

4. A specification in a section governs over a specification referenced by that section.

5. Changes last in time govern prior requirements.

In case of conflict between the Project Plans and Technical Specifications, the Plans shall govern in matters of quantity and size, the Technical Specifications in matters of quality. In case of conflict within the Plans involving quantities or within the Technical Specifications involving quality, the greater quantity and the higher quality shall be provided.

Where on any Drawing a portion of the Work is drawn out and the remainder is indicated in outline, the drawn out parts shall apply to all other like portions of the Work. Where ornament or other detail is indicated as starting, such detail shall be continued throughout the courses or parts in which it occurs and shall also apply to other similar parts in the Work, unless otherwise indicated.

All work shown on the Plans, the dimensions of which are not figured, shall be accurately followed to the scale to which the drawings are made; however, figured dimensions shall in all cases be followed, even if they differ from scaled measurements. Full-size drawings shall be followed in the execution of the Work.

Any material specified by reference to the number, symbol, or title of a specified standard such as a Commercial Standard, a Federal Specification, a trade association standard, or other similar standards, shall comply with the requirements in the latest approved revision thereof and any amendments or supplements thereto in effect on the date of Notice to Contractors, except as limited to type, class, or grade, or modified in such reference. The standards referred to, except as modified in the Contract Documents, shall have full force and effect as though printed in the Contract Documents.

Any work for which there are no technical specifications in the project Plans and Specifications, shall be performed in accordance with documents 8, 9 and 10 listed above in this Section 4-6, with the highest order of precedence. Documents 9 and 10 are only incorporated into the Contract for this limited purpose, and no portions of these documents are

incorporated for any other purpose except as expressly indicated elsewhere in the Contract Documents.

4-7 REQUESTS FOR INFORMATION

4-7.01 General

Contractor shall prepare a Request for Information (RFI) when additional information, clarification, or interpretation of the Contract is required. RFI's may also be used for apparent conflicts, inconsistencies, ambiguities, or omissions.

RFI's shall be submitted to the City sufficiently in advance of the work to permit time for investigation and preparation of a response. Any work undertaken prior to receipt of a response to an RFI will be at the Contractor's risk.

RFI's shall not be used for submittals or for substitution of material or equipment, or for waiving of requirements.

4-7.02 Procedure

An RFI shall be submitted on an approved form as defined at the preconstruction meeting, and shall be numbered consecutively. A status log shall be prepared and updated by the Contractor and reviewed with the City at each progress meeting. Each RFI shall deal with only one topic, item, issue, or system. The RFI shall clearly describe and specifically state what is being requested. Relevant portions of the Contract shall be cited, marked-up, and attached.

The Contractor shall review each RFI before submittal and compare it with the Contract to verify that a response is required. RFI's will only be accepted from the Contractor and not from Subcontractors or suppliers. A recommendation or proposed solution may be included when appropriate or expedient. RFI's that are not clear or RFI's for which a response is clearly identified in the Contract will not be accepted.

4-7.03 Response

The City will normally respond within fifteen (15) Working Days. The City will provide a written response, and that response shall control. The Contractor shall indicate a priority for responses to RFI's if more than five (5) RFI's are pending at the same time. In case of a dispute between the Contractor and the City, protest may be made as provided in Section 9-16, "Dispute Regarding Contract Requirements", of these General Provisions.

Subsequent resubmittals of an RFI shall be identified with the same RFI number and a letter designation. Resubmittals shall clearly state the reason for the resubmittal.

Responses to RFI's indicating a change to drawings shall be recorded by the Contractor on the Record Documents in accordance with Section 11-3, "Record Drawings" of these General Provisions.

4-8 DELETED ITEMS

The City may delete from the Work any item of work. The Contractor will be paid for all work done toward the completion of the item prior to such deletion, as provided in Chapter 9, “Changes and Claims”, of these General Provisions but in no event will the amount paid exceed the Bid or Schedule of Values amount less the value of the deleted work. The Contractor shall make no claim, nor receive any compensation for profits, for loss of profit, for damages, or for any extra payment whatever because of any deleted items of work.

4-9 EXTRA WORK

Work not covered by the Contract but necessary for the proper completion of the Project will be classed as extra work and shall be performed by the Contractor when directed in writing by the City. Extra work shall be performed in accordance with the Contract and as directed by the City.

Extra work must be authorized in writing by the City before the work is started. Payment for extra work will not be made unless such prior written authorization is obtained.

In the event of an emergency or other situation that endangers the Work or endangers public safety, the City will direct the Contractor to perform such extra work necessary to protect the Work or the public.

4-10 USE OF COMPLETED PORTIONS

The City has the right during the progress of the Work to occupy and/or use any completed or partially completed portion of the Work. Such use shall not be deemed acceptance of that portion, nor of any other portions of the Work, nor of work not completed in accordance with the Contract.

Under unusual circumstances on an exception basis, and only by written approval of the City, the City may provide a field acceptance of a completed portion of the Work under Section 7-21 “Final Inspection and Field Acceptance”, of these General Provisions, such that the warranty period for that portion will be considered to commence and the Contractor will be relieved of any further maintenance and protection of that portion. No final payment shall occur for a limited portion of the work. The Contractor will not be relieved of the Contract requirements for repairing or replacing defective work and materials in accordance with Sections 7-21 and 7-23, “Warranty Work”, of these General Provisions.

4-11 LANDS AND RIGHTS-OF-WAY

The City shall provide the lands, rights-of-way, and easements upon which the Work is to be done, and such other lands as may be designated on the Plans for the use of the Contractor. The Contractor shall confine its operations to within these limits. The Contractor shall comply with the terms and conditions of right of entry, right of way and easement documents. The City shall provide photocopies of these documents to the Contractor prior to the Contractor’s use of, or commencement of Work, in the lands in question.

The Contractor shall provide at the Contractor's own expense any additional land and access that is required for temporary construction facilities or storage of materials. The

Contractor shall obtain all required permissions for use of private property prior to taking possession or use. The permission shall be obtained in writing and a copy forwarded to the City prior to the Contractor taking possession of said property.

4-12 WARRANTY

Unless otherwise specified in the Special Provisions, the warranty time period will be one year after City acceptance of Work (see Section 7-22, “Final Acceptance and Notice of Completion”, of these General Provisions) and subject to the terms of the Contractor Guarantee Form. The Performance Bond furnished by the Contractor as part of the execution of the Contract shall include the terms and time period of the Warranty of the Contractor’s work In lieu of continuing the original performance bond through the warranty period, the Contractor may submit a warranty bond, on a form substantially the same as the Performance Bond, for a minimum of ten percent (10%) of the total project value to be valid for one year from the date of acceptance by the Council, subject to extension in accordance with the Contractor Guarantee Form for corrected defective work .

If required by the Special Provisions, the Contractor shall enter into and sign Warranty statements in the form provided to warranty various segments of the Work for the time specified.

If failure of any portion of the Work can be attributed to faulty materials, poor workmanship, defective equipment, or any other reason that can be attributed to Contractor’s performance, and this failure occurs prior to the end of the specified warranty period, the Contractor shall promptly make the needed repairs at the Contractor's expense in accordance with Section 7-23, “Warranty Work”, of these General Provisions.

CHAPTER 5 -- CONTROL OF WORK AND MATERIALS

TABLE OF CONTENTS

Section **Page**

5-1 AUTHORITY OF CITY 41
5-2 ATTENTION AND COOPERATION OF CONTRACTOR 41
5-3 SUGGESTIONS TO CONTRACTOR 41
5-4 SEPARATE CONTRACTS 41
5-5 COOPERATION WITH OTHER CONTRACTORS 41
5-6 CONTRACTOR'S DISMISSAL OF UNSATISFACTORY EMPLOYEES 42
5-7 CONTRACTOR'S EQUIPMENT 42
5-8 CONTRACTOR'S SUBMITTALS 42
5-8.02 Resubmittals 43
5-8.03 Submittals Containing Proprietary Information 44
5-8.04 Electrical, Instrumentation, Control, and Communication Systems 44
5-8.05 Maintenance and Operations (M&O) Submittals 44
5-9 DAILY REPORTS 45
5-10 SURVEYS 45
5-10.01 Surveys 45
5-10.01.A Streets and Highways 46
5-10.01.B Sewer, Water, and Drainage Facilities 46
5-10.02 Survey Monuments 46
5-11 RESPONSIBILITY FOR ACCURACY 47
5-12 DUTIES AND POWERS OF INSPECTORS 47
5-13 INSPECTION 47
5-14 QUALITY OF MATERIALS AND WORKMANSHIP 48
5-15 SUBSTITUTIONS 49
5-15.01 Written Request 49
5-16 PREPARATION FOR TESTING 49
5-17 MATERIALS SAMPLING AND TESTING 49
5-18 APPROVAL OF MATERIALS OR EQUIPMENT 50
5-18.01 Sources Of Supply 50
5-18.02 Plant Inspection 50
5-19 PROVISIONS FOR EMERGENCIES 50
5-20 RIGHT TO RETAIN IMPERFECT WORK 51
5-21 REMOVAL OF REJECTED MATERIALS OR WORK 51
5-22 TEMPORARY SUSPENSION OR DELAY OF WORK 51
5-23 TERMINATION OF CONTRACT 51
5-23.01 Reasons for Termination 51
5-23.01.A Termination for Convenience 52
5-23.01.B Termination for Cause 52
5-23.02 Termination After Contract Time 53
5-23.03 Notice of Termination; City Completion 53
5-23.04 Payments to Contractor Upon Termination of Contract 55
5-23.05 Completion Not a Waiver of City Rights 55
5-23.06 Survival of Obligations 55
5-24 TERMINATION OF UNSATISFACTORY SUBCONTRACTS 56

CHAPTER 5 CONTROL OF WORK AND MATERIALS

5-1 AUTHORITY OF CITY

The City will decide all questions regarding the quality and acceptability of materials furnished, work performed, and rate of progress of the Work. The City will decide all questions regarding the interpretation and fulfillment of the Contract on the part of the Contractor, and all questions as to the rights of different contractors that may be involved with the Work.

The City will determine the amount and quality of the Work performed and materials furnished for which payment is to be made under the Contract.

The City will administer its authority through a duly designated representative identified at the preconstruction meeting. The Contractor and the City representative shall make good faith attempts to resolve disputes that arise during the performance of the Work.

Any order given by the City not otherwise required by the Contract to be in writing will be given or confirmed by the City in writing at the Contractor’s request. Such request shall state the specific subject of the decision, directive, instruction, or notice and, if it has been given orally, its date, time, place, author and recipient.

5-2 ATTENTION AND COOPERATION OF CONTRACTOR

The Contractor shall comply with any written instruction delivered to the Contractor or the Contractor’s authorized representative by appropriately authorized representatives of the City.

5-3 SUGGESTIONS TO CONTRACTOR

Any plan or method suggested to the Contractor by the City, but not specified or required in writing, if adopted or followed in whole or in part by the Contractor, shall be used at the risk and responsibility of the Contractor. The City assumes no responsibility.

5-4 SEPARATE CONTRACTS

The City reserves the right to award other contracts in connection with the Work. The Contractor shall afford other contractors reasonable opportunity for the delivery and storage of their materials and the execution of their work and shall properly connect and coordinate its work with the other contractors.

If any part of the Contractor's work depends upon the work of any other contractor for proper execution or results, the Contractor shall inspect and promptly report to the City any defects in such work that render the other contractor’s work unsuitable for proper execution and results. The Contractor's failure to so inspect and promptly report shall constitute an acceptance of the other contractor's work as fit and proper for the reception of the Contractor's work, unless defects develop in the other contractor's work after the execution of the Contractor's work.

5-5 COOPERATION WITH OTHER CONTRACTORS

Other contractors and other forces, including the City and/or adjacent property owners may perform work adjacent to or within the Work area concurrent with the Contractor's operations.

The Contractor shall conduct operations to minimize interference with the work of other forces or contractors. Any disputes or conflicts between the Contractor and other forces or contractors retained by the City which create delays or hindrance to each other shall be referred to the City for resolution. If the Contractor's work is delayed because of the acts or omissions of any other force or contractor, the Contractor shall have no claim against the City other than for an extension of time (see Section 7-18, "Extension of Time", of these General Provisions).

5-6 CONTRACTOR'S DISMISSAL OF UNSATISFACTORY EMPLOYEES

If any person employed by the Contractor or any Subcontractor shall fail or refuse to carry out the directions of the City or the provisions of the Contract, or is, in the opinion of the City, incompetent, unfaithful, intemperate, or disorderly; or uses threatening or abusive language or conduct to any person on or associated with the Work or with the public; or is acting or working in a manner that compromises the safety of the public, Work or persons or property involved with the Work, or is otherwise unsatisfactory, the Contractor shall, when requested by the City, remove the worker from the Work site immediately, and shall not again employ the removed worker on the Work except with the written consent of the City.

5-7 CONTRACTOR'S EQUIPMENT

The Contractor shall provide adequate and suitable equipment, labor, and means of construction to meet all the requirements of the Work, including completion within the Contract Time. Only equipment suitable to produce the quality of work required will be permitted to operate on the Project. Specific types of equipment may be requested by the City on component parts of the Work.

The City may, at the City's option, permit the use of new or improved equipment, at the Contractor's cost. If such permission is granted, it is understood that it is granted for the purpose of testing the quality and continuous attainment of work produced by the equipment, and the City shall have the right to withdraw such permission at any time that the City determines that the alternative equipment is not producing work that is equal in all respects to that specified, or will not complete the Work in the time specified in the Contract. The cost for mobilizing and demobilizing new or improved equipment shall be borne by the Contractor.

In any case where the use of a particular type or piece of equipment has been banned, or in cases where the City has condemned for use on the Work any piece or pieces of equipment, the Contractor shall promptly remove such equipment from the site of the Work at its cost. Failure to do so within a reasonable time may be considered a breach of contract. The cost for mobilizing and demobilizing replacement equipment shall be borne by the Contractor.

5-8 CONTRACTOR'S SUBMITTALS

5-8.01 Submittals - General

The Contractor shall furnish all working drawings, plans, specifications, descriptive data, certificates, samples, tests, methods, schedules, and manufacturer's instructions as required in the Contract, and any other information required to demonstrate that the materials and equipment to be furnished and the methods of work comply with the provisions and intent of the Contract. Submittals shall be submitted by the dates specified in the Contract or, in the

City's sole discretion, a fine of $100 per day will be levied until the appropriate submittals are properly submitted.

Submittals for systems shall be bound together, include all information for the system and, unless otherwise specified, submitted to the City electronically.

A minimum of five (5) copies of all submittals shall be furnished, two (2) of which will be returned after review. Depending on the complexity of the submittal, the number of submittals, and the express needs of the Contractor, the submittal will be returned to the Contractor within thirty (30) Calendar Days, exclusive of any time awaiting clarification or further information. Where any item of the work is required to be installed in accordance with the manufacturer's recommendations, the Contractor shall furnish a complete set of the manufacturer's installation recommendations to the City prior to starting the installation. These submittals will be retained by the City.

If the information furnished in a submittal shows any deviation from the Contract requirements, the Contractor shall, by a statement in writing accompanying the information, advise the City of the deviation and state the reasons. It shall be the Contractor's responsibility to ensure there is no conflict with other submittals and to notify the City in any case where the Contractor's submittal may concern work by another contractor, adjacent property owners, other forces or the City.

The Contractor is solely responsible for coordination of submittals among all related crafts performing the Work. The Contractor shall verify that its Subcontractors' submittals are complete in every way and meet the requirements of the Contract.

Direction from the City to proceed following return of the Contractor's submittals shall not relieve the Contractor of responsibility for any error or of any obligation for accuracy of dimensions and details, for agreement with and conformity to the Contract, or responsibility to fulfill the Contract as prescribed. Nor shall such direction be considered as approval of any deviation or conflict in the submittal unless the City has been expressly advised in writing of the same as set forth immediately above, and the City has expressly approved such deviation or conflict in writing.

The Contractor shall make no changes to any submittal after it has been returned, and the equipment or materials shall not deviate in any way except with written approval by the City. Fabrication or other work performed in advance of return of the submittal with a direction to proceed shall be done entirely at the Contractor's risk.

Minimum requirements for submittals are contained in these Specifications. Additional and/or project-specific requirements may be contained in the Contract. The Contractor is responsible for identifying and providing all required submittals.

5-8.02 Resubmittals

Resubmittals shall address all comments from the City. Partial resubmittals may be returned 'REVISE AND RESUBMIT." The Contractor is responsible for the City's review costs for each resubmittal in excess of the first resubmittal. These costs will be charged to the Contractor and will be deducted from progress payments.

5-8.03 Submittals Containing Proprietary Information

All required information shall be provided even though some or all of such information may be considered proprietary. If any of the information required herein is considered proprietary, a proprietary agreement shall be executed between the City and the Contractor, stipulating that all such information will be supplied by the Contractor and kept confidential by the City. All proprietary data shall be identified as part of the Contractor's Bid and the proprietary agreement shall be executed before award of the Contract. Proprietary information is defined as any information or data describing or defining a product, process or system which 1) was developed at the expense of the Contractor, a Subcontractor or supplier; 2) is not generally available in the industry; and 3) is kept secret by its owner for purposes of preventing its use by others. Application software and all other documentation, or any other product, prepared by the Contractor, Subcontractor, or supplier at the expense of the City for specific use on the facility being constructed under the Contract shall not be considered proprietary.

All submitted proprietary information shall describe the final record Work. No part of the Work covered by the proprietary agreement shall be modified after proprietary submittal acceptance until updated proprietary information has been submitted by the Contractor and accepted by the City. Updated proprietary information shall fully document all modifications to be implemented. All proprietary data shall be marked “PROPRIETARY” by the Contractor.

5-8.04 Electrical, Instrumentation, Control, and Communication Systems

Electrical, instrumentation, control, and communication system drawings shall include elementary and loop diagram drawings, functional single line system layout drawings, connection drawings, interconnection drawings, panel/cabinet fabrication drawings, and detailed circuit board and component drawings. Detailed circuit schematics and circuit board layout drawings shall clearly show, locate, and identify all components and wiring. Each circuit board component shall be identified by the component's original manufacturer name and part number.

Industry standard part numbers shall be used. Component values, voltage/current levels, setpoints, and timing values shall be defined. Drawings shall be in the latest version of AutoCAD or other electronic reproducible medium specified by the City.

Conduit layout diagrams shall be provided for all electrical conduits, and conduits shall be labeled in the field consistent with the layout diagrams.

Complete annotated software/firmware source code listings and program documentation shall be provided for all electronic/electrical systems, subsystems, assemblies, parts, components, and equipment that incorporate programmable devices. All instructions and hardware necessary to load, store, modify, and activate software/firmware source codes and programs shall be provided.

5-8.05 Maintenance and Operations (M&O) Submittals

For use in subsequent maintenance and operations the Contractor shall furnish to the City electronically and bound together and indexed all maintenance and operation information,

including all the highest level of factory maintenance manuals (greatest level of detail) that are available to factory representatives with a three-year subscription to newsletters and updates supplied by the manufacturer covering all equipment and systems included in the Contract. The City may withhold up to thirty percent (30%) of the Total Contract Price until M&O submittals have been submitted and approved. The submittal shall include at a minimum:

- Drawings
- Illustrations
- Parts lists
- Wiring diagrams of systems
- Internal wiring diagrams and circuit board schematics and layout drawings
- Manufacturer's recommended spare parts lists
- Name, address and phone number of nearest parts and service City
- Systems balance data
- Maintenance and service instructions
- Operation instructions
- Software including annotated source lists and programs

The submittal of maintenance and operation information is required for all mechanical, electrical, instrumentation, control, communications, sound, or special equipment and systems.

The Contractor shall obtain approval of the required data at least thirty (30) Calendar Days prior to any required training or the final inspection date.

5-9 DAILY REPORTS

No less than on a weekly basis, the Contractor shall submit, upon request of the City, to the City daily reports, which shall include, without limitation, the identity of Subcontractors on the site, an accurate headcount of workers on the site, materials and equipment delivered to the site, visitors to the site, work performed, and any problems encountered.

5-10 SURVEYS

5-10.01 Surveys

Except as set forth in this Section or in the Special Provisions, the Contractor shall be responsible for performing all necessary surveys to lay out and control the Work to the locations, elevations, lines, and dimensions shown or specified in the Contract. Any deviations

must receive prior written approval of the City. All surveys affecting the line or elevation of underground drainage, sewers, or utilities, and all other work within public rights-of-way or easements, shall be performed by or under the direction and supervision of a California Registered Civil Engineer authorized to practice land surveying or a California Licensed Land Surveyor. The Contractor shall be responsible for protecting and perpetuating survey monuments affected by construction activities in accordance with Business and Professions Code Section 8771(b). The Contractor shall be responsible for the accuracy of the Contractor's own layout work, and shall be liable for the preservation of all established lines and grades.

Stakes damaged or destroyed by the operations of the Contractor shall be replaced at the Contractor's expense.

The Contractor's surveys also shall include, without limitation, the following surveys:

5-10.01.A Streets and Highways

- Slope Stakes -- One line of slope stakes at fifty-foot (50') intervals for the construction of each pavement edge. The Contractor shall set back and reference the stakes.

- Subgrade -- One line of blue tops at centerline or at a location directed by the City for each two (2) lanes of the roadway at fifty-foot (50') intervals, and three (3) lines on super-elevated sections for each two (2) lanes. The Contractor shall reference subgrade stakes for the subbase and base layers.

- Finished Base -- One (1) line of blue tops at centerline or at a location directed by the City for each two (2) lanes of roadway at fifty-foot (50') intervals, and three (3) lines for each (2) lanes on super-elevated and widened sections.

- All necessary line, location, and elevation stakes for curb and gutter, inlets, pipes, drainage structures, signals, box culverts, and other miscellaneous facilities.

5-10.01.B Sewer, Water, and Drainage Facilities

- For all pipelines to be laid on grade: the City will establish an offset line at fifty-foot (50') intervals, furnish cut sheets and necessary land surveys, and establish bench marks, base lines, and reference points for locating principal structures.

- For drainage channels: the City will furnish slope stakes at fifty-foot (50') intervals.

From this information, the Contractor shall develop and make all additional detail surveys and measurements necessary for the construction of the Work.

5-10.02 Survey Monuments

The City shall show on the construction Plans, to the best of its knowledge, the location and character of survey monuments located within the construction area. It is the Contractor's responsibility to arrange and pay for a diligent and thorough search for survey monuments. This shall be performed by or under the direction of a California Licensed Land Surveyor or a

California Registered Civil Engineer authorized to practice Land Surveying, prior to the beginning of construction or maintenance work that could disturb or destroy a survey monument. Any monuments found shall be referenced and reset by or under the direction of a California Licensed Land Surveyor or a California Registered Civil Engineer authorized to practice Land Surveying in accordance with Business and Professions Code Section 8771. On thin surface treatments, such as chip seals, the monuments can be covered in advance of the maintenance treatment with a suitable material and then removed to expose the monument.

When survey monuments not shown on the Plans are discovered, the Contractor shall bring them to the attention of the City prior to damaging them. Any City survey monuments damaged or destroyed by the Contractor shall by reset by the City or Contractor at the Contractor's expense. Any other damaged or destroyed survey monuments shall by reset by the Contractor at its sole expense in accordance with the Land Surveyors Act (Business & Professions Code 8700 et seq.).

When the Special Provisions require that the Contractor provide all surveys, the Contractor shall be responsible for referencing, resetting, and filing of corner records for all survey monuments disturbed or destroyed by construction activities in accordance with Business and Professions Code Section 8771.

All survey monuments and references shall be set or reset by or under the direction of a California Licensed Land Surveyor or a California Registered Civil Engineer authorized to practice Land Surveying.

5-11 RESPONSIBILITY FOR ACCURACY

The Contractor shall obtain all necessary measurements for and from the Work, and shall check dimensions, elevations, and grades for all layout and construction work and shall supervise such work; the accuracy for all of which the Contractor shall be responsible. The Contractor is responsible for adjusting, correcting, and coordinating the work of all Subcontractors so that no discrepancies result.

5-12 DUTIES AND POWERS OF INSPECTORS

Inspectors are the authorized representatives of the City. Their duty is to inspect materials and workmanship of those portions of the Work to which they are assigned, either individually or collectively, under instructions of the City, and to report all deviations from the Contract.

City work site inspections will only be conducted Monday through Thursday from 7AM to 3:30PM, excluding City Holidays. Any inspections outside of these hours shall be requested at least three (3) days prior, must be approved by the Project Manager, and all costs associated with the inspections shall be paid by the Contractor.

5-13 INSPECTION

The inspection of the Work does not relieve the Contractor of the obligation to fulfill all Contract requirements. The purpose of inspection is not to assure Contractor that all of the Work is meeting all of the Contract requirements.

All work and materials furnished pursuant to the Contract shall be subject to inspection and

approval by the City. The Contractor shall provide the City and Inspectors with access to the Work during construction and shall furnish every reasonable facility and assistance for ascertaining that the materials, equipment and the workmanship are in accordance with the requirements and intent of the Contract. Any work, materials, or equipment not meeting the requirements and intent of the Contract will be rejected, and unsuitable work, equipment or materials shall be made good, notwithstanding the fact that such work, materials or equipment may have been previously inspected or approved and /or payment may have been made. The Contractor shall be solely responsible for any costs associated with the removal of any defective work, equipment or materials discovered during the inspection and the complete cost of reconstruction.

Unless authorized in writing by the City, any work done in the absence of an Inspector, whether completed or in progress, shall be subject to inspection. The Contractor shall furnish all tools, labor, materials, access facilities, and other facilities necessary to allow such inspection, even to the extent of uncovering or taking down completed portions of the Work. The Contractor shall pay all costs incurred, whether or not any defective work is discovered. The Contractor shall also be solely responsible for any costs associated with the removal of any defective work discovered during the inspection and the complete cost of reconstruction.

Reexamination of any part of the Work may be ordered by the City, and such part of the Work shall be uncovered by the Contractor. The Contractor shall pay the entire cost of such uncovering, reexamination, and replacement if the reexamined work does not conform to the Contract.

The Contractor shall notify the City of the time and place of any factory tests and submit test procedures for approval thirty (30) Calendar Days in advance for any tests that are required by the Contract. The Contractor shall report the time and place of preparation, manufacture or construction of any material for the Work, or any part of the Work, that the City wishes to inspect. The Contractor shall give five (5) Working Days' notice in advance of the beginning of work on any such material or of the beginning of any such test to allow the City to make arrangements for inspecting and testing or witnessing.

5-14 QUALITY OF MATERIALS AND WORKMANSHIP

Unless otherwise allowed or required by the Special Provisions, all equipment and materials shall be new and of a quality at least equal to that specified. All workmanship shall also be of the highest qualify. When the Contractor is required to furnish equipment, materials or manufactured articles or shall do work for which no detailed specifications are set forth, the equipment, materials or manufactured articles shall be of the best grade in quality and workmanship obtainable in the market. If not ordinarily carried in stock, the articles shall conform to the usual standards for first-class materials or articles of the kind required. The work performed shall secure the best standard of construction and equipment of the Work as a whole or in part.

Materials shall be furnished in sufficient quantities and at such times to ensure uninterrupted progress of the Work. All required spare parts shall be delivered in new condition, not in a used or unknown condition, and with any certificates required. Materials, supplies, and equipment shall be stored properly and protected as required. The Contractor shall be entirely responsible for damage or loss by weather or other causes.

5-15 SUBSTITUTIONS

Certain materials, articles, or equipment may be designated in the Contract by brand or trade name or manufacturer together with catalog designation or other identifying information. Substitute material, article, or equipment which is of equal quality and of required characteristics for the intended purpose may be proposed for use, provided the Contractor complies with the requirements of the following paragraphs.

5-15.01 Written Request

The Contractor shall submit any request for substitution in writing no later than thirty (30) Calendar Days after the award of the Contract.

5-15.02 Documentation

If requested by the City, a proposal for substitution must be accompanied by complete information and descriptive data, including cost of operation, cost of maintenance, and physical requirements necessary to determine the equality of offered materials, articles, or equipment.

The Contractor shall also submit such shop drawings, descriptive data, and samples as requested. The burden of proof of comparative quality, suitability, and performance of the offered proposal shall be upon the Contractor. The determination of equal quality, suitability, and performance shall be at the sole discretion of the City. The City will examine such submittals with reasonable promptness. If the City rejects the request for such substitution, then one of the particular products designated by brand name in the Contract shall be furnished. Acceptance of substitution by the City shall not relieve the Contractor from responsibility for deviations from the Plans and Specifications or from responsibility for errors in submittals. Failure by the Contractor to identify deviations in the request material from the Plans and Specifications shall void the submittal and any action taken thereon by the City.

Changes required for proper installation and fit of substitute materials, articles or equipment, or because of deviations from the Contract shall not be made without the written consent of the City and shall be made by the Contractor without additional cost to the City. The Contractor shall pay the costs of design, drafting, architectural or engineering services and alterations of the construction required to accommodate any Contractor substitution or construction error to maintain the original function and design.

5-16 PREPARATION FOR TESTING

The Contractor shall maintain proper facilities and provide safe access for inspection by the City to all parts of the Work and to the shops wherein parts of the Work are in preparation. Where the Contract requires work to be tested or approved, such work shall not be tested or covered up without at least a five (5) Working Day notice to the City of its readiness for inspection, unless the written approval of the City for such testing or covering is first obtained.

5-17 MATERIALS SAMPLING AND TESTING

Materials to be used in the Work will be subject to sampling and tests by the City. The

Contractor shall furnish the City with a list of the Contractor's sources of materials and the locations at which such materials will be available for inspection. The list shall be furnished to the City in time to permit the inspection and testing of materials in advance of their use.

Testing shall be done to such standards as set forth in the Plans, Specifications, or Special Provisions. References made in these documents to standard methods of testing materials shall make such standards a part of the Specifications.

Whenever a reference is made in the Specifications to a specification or test designation of any recognized State or national organization or State of California City, and the number or other identification representing the year of adoption or the latest revision is omitted, it shall mean the specification or test designation in effect on the date of the original Notice to Contractors for the Work.

When requested by the City, samples or test specimens of the proposed materials shall be prepared at the expense of the Contractor and furnished by the Contractor in such quantities and sizes required for proper examination and tests, and with complete information describing type, kind, or size of material, and its source. All samples shall be submitted in time to permit the making of proper tests, analyses, or examinations before incorporating the materials into the Work. No material shall be used in the Work unless or until it has been approved by the City. All material tests shall be made by the City in accordance with recognized standard practice. The Contractor shall pay the cost of the first retest and any subsequent retest of any area or material. The City will secure and test samples whenever necessary.

5-18 APPROVAL OF MATERIALS OR EQUIPMENT

5-18.01 Sources Of Supply

The City's approval at the source of supply may be required prior to procurement. Such approval shall not prevent subsequent disapproval or rejection of materials or equipment by the City if the quality is less than required by the Contract.

5-18.02 Plant Inspection

The City assumes no obligation to inspect materials or equipment at the source of supply. The Contractor is responsible for incorporating satisfactory materials and equipment into the Work, notwithstanding any prior inspections or tests.

The City will inspect materials or equipment at the source if the Contractor submits a written request and if the City deems the inspection necessary. The Contractor and the supplier will cooperate with and assist the City while performing the inspection. The City shall have access to all production areas of the material or equipment source or place of manufacturing.

5-19 PROVISIONS FOR EMERGENCIES

The City may provide necessary labor, material and equipment to correct any emergency resulting from the Contractor's operation including noncompliance with the Contract, public convenience, safety, traffic control, and protection of Work, persons, environment, and property. The nature of the emergency may prevent the City from notifying the Contractor prior to taking action. The costs of such labor, material, and equipment shall be borne by the

Contractor and will be deducted from progress payments.

The performance of such emergency work under the direction of the City shall not relieve the Contractor from any damages resulting from the emergency.

5-20 RIGHT TO RETAIN IMPERFECT WORK

If any portion of the work done or materials or equipment furnished under the Contract shall prove defective or not in accordance with the Contract, and if the defect in the work, materials or equipment is not of sufficient magnitude or importance to make the work, materials or equipment dangerous or undesirable, or if the removal of such work, materials or equipment is impracticable or will create conditions which are dangerous or undesirable, the City shall have the right and authority to retain the work, materials or equipment instead of requiring it to be removed and reconstructed or replaced. Progress payment deductions will be made as described in Section 8-9, “Deductions for Imperfect Work”, of these General Provisions.

5-21 REMOVAL OF REJECTED MATERIALS OR WORK

The Contractor shall remove all rejected or condemned materials, equipment or structures brought to or incorporated in the Work within two (2) Working Days of the City’s written directive. No such rejected or condemned materials or equipment shall again be offered for use in the Work. The Contractor shall, at the Contractor’s expense, bring into Contract compliance all rejected material, equipment or work in a manner acceptable to the City.

The City may bring into Contract compliance the rejected material or equipment if the Contractor fails to comply with this Section. All costs shall be borne by the Contractor and will be deducted from the Progress Payment.

5-22 TEMPORARY SUSPENSION OR DELAY OF WORK

The City has the authority to suspend or delay the Work, wholly or in part, for any period the City deems necessary. The Contractor shall immediately comply with the City’s written directive to suspend or delay the Work. The suspended or delayed work shall be resumed only when conditions are favorable or methods are corrected, as ordered or approved in writing by the City. Public safety and convenience must be maintained throughout the suspension or delay in accordance with Sections 6-12, “Public Convenience and Safety”, and 6-13, “Public Safety and Traffic Control”, of these General Provisions.

Delays due to suspension of work shall be classified as Inexcusable or Excusable Delays in accordance with Section 7-12, “Delays”, of these Specifications. Such suspension shall not relieve the Contractor of the Contractor’s responsibilities as described in the Contract.

5-23 TERMINATION OF CONTRACT

5-23.01 Reasons for Termination

The City reserves the right to terminate the Contract or the Contractor’s control over the Work for any of the reasons listed below.

5-23.01.A Termination for Convenience

The City may at any time and for any reason terminate the Contract or the Contractor's performance of the Work, in whole or in part.

If the Contract or the Contractor's control over the Work is terminated for cause and if it is later determined that the termination for cause was wrongful, such termination for cause automatically shall be converted to and treated as a termination for convenience. In such event, the Contractor shall be entitled to receive only the amount payable under Section 5-23.04 of these General Provisions, and the Contractor specifically waives any claim for any other amounts or damages, including any claim for consequential damages or lost profits.

5-23.01.B Termination for Cause

The City may terminate the Contract or the Contractor's control over the Work and so notify the Contract and the Contractor's sureties for the following causes:

- The Contractor is adjudged bankrupt or makes an assignment for the benefit of the Contractor's creditors, or if a receiver is appointed because of the Contractor's insolvency.
- The City has made a determination that the Contractor will be unable to complete the Work on or before the completion date as adjusted by Change Order, or the Contractor has not completed the Work on or before the completion date as adjusted by Change Order.
- The Contractor abandons the Work.
- The Work or any portion is sublet or assigned without the City's consent.
- The rate of progress is not in accordance with the Contract.
- Any portion of the Work is unnecessarily delayed.
- The Contractor willingly violates any terms or conditions of the Contract.
- The Contractor does not supply sufficient materials or properly skilled and staffed labor.
- The Contractor fails to promptly pay its Subcontractors.
- The Contractor disregards laws, ordinances, or City orders.
- The Contractor fails to correct defective work in response to defective work notices.
- The Contractor fails to comply with written directives.

5-23.02 Termination After Contract Time

In addition to any other rights it may have, the City may terminate the Contract or the Contractor's right to proceed at any time after the Contract Completion Date, as adjusted by Change Order. Upon such termination, in addition to the Contractor's other obligations under the Contract, the Contractor shall not be entitled to receive any compensation after such termination until the Work is completed, and the Contractor shall be liable to the City for liquidated damages for all periods of time from the Contract Completion Date, as adjusted by Change Order, until the date of completion, as well as for all losses incurred by the City in completing the Work, as set forth in Section 5-23.04 of these General Provisions.

5-23.03 Notice of Termination; City Completion

If grounds exist under Sections 5-23.01B or 5-23.02 above, then the City may issue to the Contractor and its sureties a Notice of Intent to Terminate the Contract or the Contractor's Control Over the Work for Cause. The Notice shall state the grounds for termination for cause that exist and demand that Contractor cure the grounds, or make satisfactory arrangement for cure of the grounds, within ten (10) days of the date of the Notice, or else the City will terminate the Contract or the Contractor's control over the Work.

If the Contractor fails to cure the grounds, or make satisfactory arrangement for cure of the grounds, stated in the Notice of Intent to Terminate within ten (10) days of the date of the Notice of Intent to Terminate, the City may give written Notice of Termination for Cause to the Contractor and the Contractor's sureties that the Contract, or a portion of the Contract, has been terminated and/or that the Contractor's control over the Work, or a portion of the Work, has been terminated for the reasons stated in the Notice of Termination. The Notice shall also demand that Contractor's surety take over and perform the Work through Completion. The Contractor's surety shall then have the right to take over and perform the Work through Completion. The City may take over the Work through Completion at the Contractor's and surety's expense if the surety does not commence performance within thirty (30) Calendar Days from the date of mailing the Notice of Termination or if immediate resumption of the Work is necessary to avoid significant additional cost.

If the City is forced to take over the Work, it may prosecute the same to completion by day labor, by contract or by any other method it may deem advisable, for the account and at the expense of the Contractor and its sureties, and the Contractor and its sureties shall be liable to the City for any excess costs, including management, supervision, and design support, occasioned thereby. In such event, the City may, without liability, take possession of and utilize in completing the Work, the Contractor's materials whether stored at the Site or elsewhere, that are necessary for completion. The City may also take possession of and use all or any part of the Contractor's tools, equipment and appliances on the premises to complete the Work. The City assumes the responsibility for returning such equipment in as good condition as when it was taken over, reasonable wear and tear excepted. The items shall be returned to the Contractor when the Work is complete or sooner, at the City's discretion. The City agrees to pay a reasonable amount for the use of such tools and equipment.

The Contractor hereby assigns to the City all of its interest in orders and/or contracts existing at the time of termination. The assignment of said orders and/or contracts shall be effective upon notice of acceptance by the City in writing, and only as to those orders and/or contracts

which the City designates in writing.

Whenever the Contract or the Contractor's control over the Work is terminated for cause, the Contractor and its sureties and shall be liable to the City for liquidated damages for all periods of time from the Contract Completion Date, as adjusted by Change Order and whether or not the termination date precedes or post-dates the adjusted Contract Completion Date, until the date of completion, as well as for all losses incurred by the City in completing the Work, as set forth in Section 5-23.04 of these General Provisions.

Immediately upon receipt of a Notice of Termination for Cause or for Convenience, except as otherwise directed in writing by the City, the Contractor shall:

1. Stop work under the Contract on the date and to the extent specified in the Notice of Termination.

2. Place no further orders or subcontracts for materials, services, or facilities except as necessary to complete the portion of the Work that is not terminated.

3. Terminate all orders and subcontracts to the extent that they relate to the performance of work terminated by the Notice of Termination.

4. Assign to the City, in the manner, at the times, and to the extent directed by the City, all of the rights, titles, and interests of the Contractor under the orders and subcontracts so terminated. The City shall have the right, at its discretion, to settle or pay any or all claims arising out of the termination of such orders and subcontracts.

5. Settle all outstanding liabilities and all claims arising out of such termination of orders and subcontracts with the approval or ratification of the City. The City's approval or ratification shall be final.

6. Transfer title to the City, and deliver in the manner, at the times, and to the extent directed by the City, fabricated or unfabricated parts, work in process, completed work, supplies, other material produced as a part of, or acquired in connection with, the terminated work, and the completed or partially completed drawings, information, and other property that, if the Contract had been completed, would have been submitted to the City.

7. Sell, in the manner, at the times, to the extent, and at the price that the City directs or authorizes, any property of the types referred to in Item 6 of this Section (Section 5-23.03). The Contractor is not required to extend credit to any purchaser, and may acquire any such property under the conditions prescribed and at a price approved by the City. The proceeds of any such transfer or disposition shall be used to reduce any payments made to the Contractor under the Contract or be credited to the cost of the work covered by the Contract or paid as the City directs.

8. Complete performance of the Work not terminated by the Notice of Termination.

9. Take necessary action, or as the City directs, to protect and preserve the

property related to the Contract in which the City has an interest.

5-23.04 Payments to Contractor Upon Termination of Contract

In the event of a termination for convenience, the Contractor and the City may agree upon an amount paid to the Contractor for the total or partial termination of the Contract or of the Contractor's control over the Work. The amount may include those items specified in Chapter 9, "Changes and Claims", of these General Provisions. However, such agreed amount shall not exceed the Total Contract Price, reduced by the amount of payments already made and the Contract price of work not terminated. The Contract shall be amended accordingly, and the Contractor shall be paid the agreed amount.

If the Contractor and the City fail to agree on the amount to pay the Contractor because of the termination for convenience under this Section, the City shall determine the amount due the Contractor.

In the event of a termination for cause, the Contractor is not entitled to receive any portion of the amount to be paid under the Contract until it is fully completed. After completion, if the unpaid balance exceeds the sum of the amount expended by the City in finishing the work, plus all damages sustained or to be sustained by the City, including, without limitation, legal expenses, City forces, administration and management, direct and indirect, plus liquidated damages, plus any unpaid claims on account of labor, materials, tools, equipment, or supplies contracted for by the Contractor for the Work, provided that sworn statements of said claims shall have been filed as required by Chapter 9, "Changes and Claims", of these General Provisions, the excess not otherwise required by the Contract Documents to be retained shall be paid to the Contractor. If the sum so expended to complete, plus the City's damages as described herein, plus liquidated damages, plus unpaid claims as described herein exceeds the unpaid balance of the Total Contract Price, the Contractor and the Contractor's surety are liable to the City for the amount of such excess.

5-23.05 Completion Not a Waiver of City Rights

No act by the City before the Work is finally accepted shall operate as a waiver or stop the City from acting upon any subsequent event, occurrence or failure by the Contractor to fulfill the terms and conditions of the Contract. The rights of the City pursuant to this Section 5-23 and all of its subsections are in addition to all other rights of the City pursuant to the Contract, and at law or in equity.

5-23.06 Survival of Obligations

No termination of this Contract or of the Contractor's control over the Work shall excuse or otherwise relieve the Contractor of its responsibilities under the Contract with respect to any Work performed prior to the date of termination, including, without limitation, its obligation to perform the Work in a good and workmanlike manner, free of defects, and in accordance with the Contract, its warranty obligations with respect to the Work, and its obligation to make all payments due. All of the Contractor's responsibilities under the Contract with respect to the Work performed prior to the date of termination shall survive any termination.

5-24 TERMINATION OF UNSATISFACTORY SUBCONTRACTS

When any portion of the Work subcontracted by the Contractor is not prosecuted in a satisfactory manner, the Contractor shall immediately terminate the subcontract upon written notice from the City. The Subcontractor shall not again be employed for any portion of the work on which the Subcontractor's performance was unsatisfactory. Substitution of a new subcontractor shall be accomplished in accordance with California Code.

CHAPTER 6 - LEGAL RELATIONS AND RESPONSIBILITIES

TABLE OF CONTENTS

Section **Page**

6-1 COMPLIANCE WITH LAWS AND REGULATIONS 59
6-1.01 Hours of Labor 59
6-1.03 Payroll Records 61
6-1.04 Nondiscrimination 63
6-1.05 Apprentices 63
6-1.06 Workers' Compensation 63
6-1.07 Fair Labor Standards 64
6-1.08 Contractors License 64
6-1.09 Use of Pesticides 64
6-1.10 Reporting Requirements and Sanctions 64
6-1.11 Subcontracting 65
6-1.12 Occupational Safety and Health 65
6-2 INDEMNIFICATION 66
6-2.01 Contractor's Performance 66
6-2.02 Indemnification of Adjacent Property Owners 67
6-3 CONTRACTOR'S LEGAL ADDRESS 67
6-4 CONTRACTOR NOT AN AGENT OF CITY 67
6-5 SUBSTITUTION OF SUBCONTRACTORS 67
6-6 ASSIGNMENT OF CONTRACT 68
6-7 ASSIGNMENT OF MONIES 68
6-8 PROTECTION OF CITY AGAINST PATENT CLAIMS 68
6-9 RESPONSIBILITY OF THE CONTRACTOR 68
6-10 PERMITS AND LICENSES 69
6-11 GENERAL SAFETY REQUIREMENTS 70
6-11.01 Compliance With Safety & Health Regulations 70
6-11.02 24-Hour Contact Information 70
6-11.03 Work During Hours of Darkness 70
6-12 PUBLIC CONVENIENCE AND SAFETY 71
6-12.01 Public Convenience 71
6-12.02 Pedestrian and Bicyclist Access 71
6-12.03 Written Notification To Residences and Businesses 71
6-12.04 Access To Driveways, Houses and Buildings 71
6-12.05 Property Damage 72
6-12.06 Erection of Signs To Expedite Passage of Vehicles 72
6-12.07 Traffic Obstructions, Delays and Inconveniences 72
6-12.08 Work On Private Property 72
6-12.09 Hazardous Conditions Created 72

TABLE OF CONTENTS (continued)

6-13 PUBLIC SAFETY AND TRAFFIC CONTROL 73
6-13.01 General 73
6-13.02 Responsibility For Safety 73
6-13.03 Passage of Emergency Vehicles 73
6-13.04 Furnishing, Installing, and Maintaining Traffic Controls 73
6-13.05 Inadequate Traffic Controls and After-Hour Maintenance and Repairs 73
6-13.06 Competent Flaggers 73
6-13.07 Construction Signs 74
6-13.08 Temporary Bridging of Excavations and Trenches 74
6-13.09 Entering and Leaving the Construction Zone 75
6-13.10 Existing Traffic Signals and Lighting Systems, Signs and Pavement Markings 75
6-13.11 Bus Stops 75
6-13.12 Dust 75
6-13.13 Removal of Spillage From Roadway 75
6-14 CONFINED SPACES 76
6-14.01 Contractor Responsibilities and Qualifications 76
6-14.02 Existing Sewers and Storm Drains 77
6-14.03 Joint City – Contractor Entries 77
6-15 TRAFFIC CONTROL PLANS (TCP) 77
6-15.01 Traffic Pattern Changes 77
6-15.02 Traffic Control Plans (TCP) 77
6-16 BARRICADING OPEN TRENCHES 78
6-17 EXISTING UTILITIES 78
6-17.01 General 78
6-17.02 Maintenance and Protection 78
6-17.03 Exact Locations Unknown 78
6-17.04 Underground Service Alert (USA) 79
6-17.05 Damage to Existing Utilities 80
6-17.06 Markings 80
6-18 APPROVAL OF CONTRACTOR'S PLANS NO RELEASE FROM LIABILITY 81
6-19 CONTRACTOR SHALL NOT MORTGAGE EQUIPMENT 81
6-20 PROPERTY RIGHTS IN MATERIALS 81
6-21 EXCAVATION AND TRENCH SAFETY 82
6-21.01 Permit 82
6-21.02 Shoring, Bracing. Shielding, and Sheeting 82
6-22 PRESERVATION OF PROPERTY 82
6-23 OVERLOADING 83

CHAPTER 6 LEGAL RELATIONS AND RESPONSIBILITIES

6-1 COMPLIANCE WITH LAWS AND REGULATIONS

The Contractor shall be familiar and comply with all Federal, State, and local laws, ordinances, codes and regulations which in any manner affect the Work, those engaged or employed in the Work or the material or equipment used in or upon the Work, or in any way affect the conduct of the Work. No pleas of misunderstanding of such laws, ordinances, codes, or regulations or of ignorance of the same on the part of the Contractor shall modify the provisions of the Contract. The Contractor and the Contractor's surety shall indemnify, defend and save harmless the City and the City's officers, officials, agents, employees, volunteers, members, affiliates and their duty authorized representatives against any claim for liability arising from, or based upon, the violation of any such law, ordinance, regulation, decree, or order, whether by the Contractor or by the Contractor's employees.

The attention of the Contractor is directed to certain laws that affect the Contract. The listing of these laws in this Chapter is not to be construed as a listing of all applicable laws. The Contractor is solely responsible for familiarity and compliance with all applicable laws.

Particular attention is called to the following:

6-1.01 Hours of Labor

Eight (8) hours of labor shall constitute a legal day's work and the Contractor or any Subcontractor under the Contractor, in the execution of the Contract, shall not require more than eight (8) hours of labor in any Calendar Day, and forty (40) hours of labor in any calendar week, from any person employed by the Contractor in the performance of the Work under the Contract, except as permitted under the provisions of Labor Code Sections 1810 to 1815 of the Labor Code of the State of California. The Contractor shall forfeit, as penalty to the City, the amount specified in Labor Code section 1813 for each worker employed by the Contractor or any Subcontractor under the Contractor in the execution of the Contract for each Calendar Day during which any worker is required or permitted to labor more than eight (8) hours and for each calendar week during which any worker is required or permitted to labor more than forty (40) hours, in violation of the provisions of Labor Code Sections 1810 to 1815.

Overtime shall be paid at the rate of not less than one and one half (1 1/2) times the basic rate of pay, or at such higher rate as may be required by the DIR, applicable statutes or collective bargaining agreements.

The City reserves the right to approve or disapprove the days scheduled for work, and the hours during which work is in progress. Overtime and shift work may be established by the Contractor with reasonable notice and the written permission of the City. Unless a different schedule for work is specified or approved by the Project Manager, no work other than overtime and shift work shall be done between the hours of 7:00 p.m. and 7:00 a.m., except such work as is necessary for the proper care and protection of the work already performed or except in case of an emergency. Failure of the Contractor to perform the work in accordance with this policy shall be deemed to be a failure on the Contractor's part to comply with the Contract and is cause for termination.

6-1.02 Prevailing Wage

Pursuant to Labor Code Section 1772, workers employed by contractors or subcontractors in the execution of any contract for public work are deemed to be employed upon public work as defined in Labor Code Sections 1720-1725. Therefore, the Contractor and all Subcontractors on the Project shall pay not less than the prevailing rate of per diem wages, including, but not limited to, overtime, Saturday, Sunday, and holiday work, travel and subsistence, as determined by the Director of the DIR pursuant to Labor Code Section 1773. Copies of such prevailing rate of per diem wages are available upon request at the office of the City Clerk at Rocklin3970 Rocklin Road, Rocklin, CA 95677 or on the internet at http://www/dir/ca/gov/OPRL/PWD.

The Contractor shall obtain and post copies of these prevailing wage rates in a prominent place at the job site, in accordance with the regulations of the DIR.

The responsibility to check prevailing wage rates is the Contractor's. Pursuant to Labor Code Section 1773.4 the Contractor may file with the Director of DIR or the Chief of the Division of Labor Standards Enforcement ("DLSE") a petition to review a determination of any rate or rates made by the Director of DIR. The Contractor may also petition the Director of DIR to make a determination for a particular craft, classification or type of work not covered by a general determination. Pending the review or determination, the wages may be assumed to be those in the applicable collective bargaining agreement, but no adjustment in the Bid or Total Contract Price shall be made if such assumption is incorrect.

The wage rates determined by the Director of the California DIR refer to expiration dates. Prevailing wage determinations with a single asterisk (*) after the expiration date that are in effect on the date of Notice to Contractors remain in effect for the duration of the Project. Prevailing wage determinations with double asterisks (**) after the expiration date indicate that the basic hourly wage rate, overtime and holiday wage rates, and employer payments to be paid for work performed after this date have been determined. If work extends past this date, the new rate shall be paid and should be incorporated in contracts entered into for the Project. The Contractor should contact the DIR as indicated in the prevailing wage determinations to obtain predetermined wage changes. All determinations that do not have double asterisks (**) after the expiration date remain in effect for the duration of the Project.

The Contractor agrees that in the event of underpayment of wages to any employee on the Project, whether by the Contractor or any Subcontractor, the City may retain from payments due to the Contractor, an amount sufficient to pay such worker the difference between the wages required to be paid by the DIR and the wages actually paid such worker for the total number of hours worked. The City may disburse such retention to such employees.

For each worker paid less than the applicable prevailing wages for any work done under this Contract by the Contractor or any Subcontractor, the Contractor shall forfeit to City as a penalty the sum determined by the Labor Commissioner in accordance with the considerations set forth in Labor Code Section 1775, over and above any retention or withholds otherwise authorized by the Contract. If a worker employed by a Subcontractor is paid less than the prevailing wages by the Subcontractor, the Contractor is not subject to this penalty assessment if the Contractor can demonstrate that it did not have knowledge of that failure of the Subcontractor to pay the prevailing wages and that it strictly complied with the

requirements of Labor Code Section 1775(b). In addition to applicable penalties, the Contractor or Subcontractor shall pay each worker the difference between the prevailing wage and the amount paid for every hour the worker was paid less than the prevailing wage.

6-1.03 Payroll Records

Contractor shall comply with Labor Code Section 1776. Regulations implementing Section 1776 are located in Section 16000 and Sections 16401 through 16403 of Title 8, California Code of Regulations. The Contractor shall be responsible for compliance by all Subcontractors on the Project.

The Contractor and Subcontractors shall keep accurate payroll records, showing the name, address, Social Security number, work classification, dates of payroll period, straight time and overtime hours worked each day and week, and the actual per diem wages paid to each journeyman, apprentice, worker, or other employee employed by the Contractor and by each Subcontractor in connection with the Work. Such records shall be certified under penalty of perjury that the information contained in the payroll record is true and correct and that the employer has complied with the requirements of Labor Code sections 1771, 1811, and 1815 for any work performed by its employees, and shall be available for inspection at all reasonable hours at the principal offices of the Contractor and Subcontractors in a manner set forth in Labor Code Sections 1776 and 1812. The Contractor shall be held responsible for all Subcontractors' compliance with this requirement.

Failure to submit timely, complete certified payrolls when requested shall entitle the City to withhold payment from the Contractor. Additionally, in the event of noncompliance with this section, the Contractor shall have 10 days in which to comply subsequent to receipt of written notice specifying in what respects the Contractor must comply. In the event of continued noncompliance, the penalties specified in subdivision (h) of the Labor Code section 1776 may be deducted from progress payments to the Contractor.

The Contractor shall not carry on its payrolls any person not actually employed by the Contractor, nor shall it carry on its payrolls employees of a Subcontractor. The Contractor shall show on its payrolls all persons actually employed by the Contractor on the Project, in any capacity. The Contractor shall supervise all Subcontractors to ensure that all Subcontractors comply with this Section.

In accordance with Government Code Section 8546.7, or any amendments thereto, all books, records, and files of the Contractor, or any Subcontractor connected with the performance of this Contract, shall be subject to examination and audit by the California State Auditor for a period of three (3) years after final payment. Contractor shall preserve and cause to be preserved such books, records and files for the audit period.

6-1.03A Additional Requirements for Labor Compliance

The Contractor shall comply with the following additional requirements and shall cause all Subcontractors on the Project, whether under contract with the Contractor or under contract with any Subcontractor, to comply.

The records kept by the Contactor and all subcontractors of the hours and wages of all employees employed on Project also shall be open at all times for inspection by the DIR and

DLSE, in accordance with Sections 1776 and 1812 of the Labor Code. Such records shall be furnished electronically to the Labor Commissioner of the DIR monthly, unless more frequent submission is required herein, and shall be furnished within 10 days of any separate request by the DIR or DLSE. Payroll records shall be furnished in a format prescribed by section 16401 of Title 8 of the California Code of Regulations, with use of the current version of DIR's "Public Works Payroll Reporting Form" (A-1-131) and "Statement of Employer Payments" (DLSE Form PW26) constituting presumptive compliance with this requirement, provided the forms are filled out accurately and completely. Payroll data can be entered manually or uploaded into the electronic certified payroll reporting (eCPR) system once it is available.

On a random basis and at such other times as it deems appropriate, the DIR also may confirm the accuracy of payroll reports, including by corroboration of information in payroll reports through independent sources, including without limitation worker interviews, examination of any time and pay records found within the definition of "Payroll Records" in section 16000 of Title 8 of the California Code of Regulations, direct verification of "Employer Payments" (as defined at section 16000 of Title 8 of the California Code of Regulations) through third-party recipients of those payments, or any other legal and reasonable method of corroboration. As part of its confirmation process, the DIR may require the Contractor and any of its subcontractors to furnish for inspection itemized statements prepared in accordance with Labor Code Section 226. The DIR may conduct random confirmation based on a recognized statistical sampling of the records submitted.

The DIR may conduct in-person inspection(s) at the site or sites at which the Work of the Project is being performed ("On-Site Visits"). On-Site Visits may include visual inspection of required job site notices, including but not limited to (1) the determination(s) of the Director of DIR of the prevailing wage rate of per diem wages required to be posted at each job site in compliance with Labor Code Section 1773.2; (2) the Notice of pay days and time and place of payment required by Labor Code Section 207; and (3) any other notices prescribed by law. On-Site Visits may also include inspections of records, inspections of the work site and observation of work activities, interviews of workers and others involved with the Project, and any other activities deemed necessary by the DIR to ensure compliance with prevailing wage requirements. In accordance with Labor Code Section 90, the Labor Commissioner and his deputies and agents shall have free access to any construction site or other place of labor and may obtain any information or statistics pertaining to the lawful duties of the Labor Commissioner, including but not limited to evidence of compliance with Labor Code Section 226 (itemized wage statements for employees) and any other laws enforced by the Labor Commissioner.

In accordance with Section 16463 of Title 8 of the California Code of Regulations ("8 CCR Section 16463"), the City may, on its own or if required by the Labor Commissioner, withhold funds due to the Contractor when payroll records are delinquent or inadequate. The amount withheld shall be those payments due or estimated to be due to the Contractor or Subcontractor whose payroll records are delinquent or inadequate, plus any additional amount that the Labor Commissioner has reasonable cause to believe may be needed to cover a back wage and penalty assessment against the Contractor or Subcontractor whose payroll records are delinquent or inadequate. The Contractor shall cease all payments to a Subcontractor whose payroll records are delinquent or inadequate until the Labor Commissioner provides notice that the Subcontractor has cured the delinquency or deficiency. When payments are withheld under 8 CCR Section 16463, the Labor Commissioner will provide the Contractor and Subcontractor, if applicable, with immediate written notice that includes all of the following: (1)

a statement that payments are being withheld due to delinquent or inadequate payroll records, and that identifies what records are missing or states why records that have been submitted are deemed inadequate; (2) specifies what amounts the City has been directed to withhold; and (3) informs the Contractor or Subcontractor of the right to request an expedited hearing to review the withholding of payments under Labor Code Section 1742, limited to the issue of whether the records are delinquent or inadequate or the Labor Commissioner has exceeded his or her authority under 8 CCR Section 16463. Where the violation is by a Subcontractor, the Contractor shall be notified of the nature of the violation and reference shall be made to Contractor's rights to withhold or recover payments from the Subcontractor under Labor Code Section 1729. The withholdings under 8 CCR Section 16463 do not preclude assessment of penalties under Labor Code Section 1776(g) for failure to timely comply with a written request for certified payroll records, as set forth above.

6-1.04 Nondiscrimination

The Contractor shall comply with Section 1735 of the Labor Code, which provides as follows:

> "A contractor shall not discriminate in the employment of persons upon public works on any basis listed in subdivision (a) of Section 12940 of the Government Code, as those bases are defined in Sections 12926 and 12926.1 of the Government Code, except as otherwise provided in Section 12940 of the Government Code. Every contractor for public works who violates this section is subject to all the penalties imposed for a violation of this chapter."

6-1.05 Apprentices

Attention is directed to the provisions of Sections 1777.5, 1777.6 and 1777.7 of the Labor Code concerning the employment of apprentices by the Contractor or any Subcontractor.

The Contractor and all Subcontractors shall comply with the requirements of Section 1777.5 and Section 1777.6 in the employment of apprentices. Violation of these requirements shall subject the Contractor and/or Subcontractor to the penalties set forth in Section 1777.7 of the Labor Code and/or otherwise provided by law or Contract.

Information relative to apprentice standards, wage schedules, and other requirements may be obtained from the Director of DIR, ex officio the Administrator of Apprenticeship, San Francisco, California, or from the Division of Apprenticeship Standards and its branch offices and/or on the OPRL website at www.dir.ca.gov/OPRL/PWD. Apprentices employed on the Project must at all times work with or be under the direct supervision of a journeyman or journeymen.

6-1.06 Workers' Compensation

Pursuant to Labor Code Section 1860, in accordance with the provisions of Section 3700 of the Labor Code, the Contractor is required to secure the payment of compensation to its employees.

6-1.07 Fair Labor Standards

The Contractor shall comply with the Fair Labor Standards Act of 1938 as amended (29 U.S.C. 3201 et seq.) as applicable.

6-1.08 Contractors License

The Contractor shall comply with Chapter 9 of Division 3 of the Business & Professions Code.

6-1.09 Use of Pesticides

The Contractor shall comply with all rules and regulations that govern the use of pesticides required in the performance of the Work, including any certifications that may be required for purchase, use, storage or application.

Pesticides include, but are not limited to, herbicides, insecticides, fungicides, rodenticides, germicides, nematocides, bactericides, inhibitors, fumigants, defoliants, desiccants, soil sterilants, and repellants.

Any substance or mixture of substances intended for preventing, repelling, mitigating, or destroying weeds, insects, diseases, rodents, or nematodes and any substance or mixture of substances intended for use as a plant regulator, defoliant or desiccant shall be considered a pesticide.

6-1.10 Reporting Requirements and Sanctions

Failure to provide specific information, records, reports, certifications, or any other documents required for compliance with the Contract will be considered noncompliance. At a minimum, documents required include:

1. List Of Subcontractors

   A list is required from the Contractor of all Subcontractors, including all lower tier Subcontractors, who are or will be performing work on the Project, using the format of Attachment B to the Bid Documents. This list is due within ten (10) Calendar Days after the date of the preconstruction conference or within ten (10) Calendar Days after the date of award of the subcontract. The later of the two dates will apply.

2. Certified Payroll Reports

   Certified Payroll Reports are required from the Contractor and each Subcontractor, regardless of the subcontract amount or the type of procurement, for every payroll period in which work is performed. These reports are due with progress payment requests and no later than ten (10) Working Days of the ending date of the payroll period.

3. Fringe Benefit Statement

A Fringe Benefit Statement is required from the Contractor and each Subcontractor if fringe benefits are paid to an approved plan, fund, or program. The statement is due with the first certified payroll report and any time the fringe benefit amounts change. The statement is not required if the fringe benefits are paid in cash to the employees.

4. Other Documentation

When required by the Special Provisions, other reporting documentation may be required depending on the source of funding for the project.

If the Contractor fails to comply with the provisions of this Section, the Contractor will be advised of the specific deficiencies and requested to make immediate corrections. The Contractor will also be advised that monetary deductions will be made for failure to effect corrections or delinquencies.

If the Contractor fails to correct a deficiency in the reporting requirements within fifteen (15) Calendar Days after notification, a deduction may be made. In such cases, the deduction will be ten percent (10%) of the estimated value of the work done during the month, except that the deduction will not exceed ten thousand dollars ($10,000), nor be less than one thousand dollars ($1,000), and will be deducted from the next progress payment.

Deductions for non-compliance will be in addition to all other deductions provided for in the Contract and will apply irrespective of the number of instances of noncompliance. Deductions will be made separately and cumulatively for each estimate period in which a new deficiency appears. When all deficiencies for a period have been corrected, the deduction covering that period will be released on the next progress payment. Otherwise, the deduction will be retained.

6-1.11 Subcontracting

The Contractor must comply with Section 4101 to Section 4113, inclusive, of the Public Contract Code.

6-1.12 Occupational Safety and Health

The Contractor must comply with all applicable provisions of the California Occupational Safety and Health Act (Labor Code Sections 6300 et seq.). The foregoing includes, but is not limited to, all applicable Title 8 Safety Orders issued by the State of California Occupational Safety and Health Administration (Cal/OSHA). Failure of the City to suspend the work or notify the Contractor of the inadequacy of the safety precautions or non-compliance with existing laws and regulations shall not relieve the Contractor of this responsibility.

6-2 INDEMNIFICATION

6-2.01 Contractor's Performance

To the fullest extent permitted by law, the Contractor shall indemnify, defend with counsel acceptable to the City, and hold harmless the City, its officers, officials, employees, agents, and volunteers from and against any and all losses, claims, demands, damages, costs, expenses, attorney's fees, or liability of every nature arising out of or in any way connected with the performance or attempted performance of the provisions of this Contract, caused in whole or in part by any negligent or willful act or omission of the Contractor, its officers, employees, or agents, or anyone directly or indirectly acting on behalf of the Contractor, regardless of whether caused in part by a party indemnified hereunder. Nothing contained in the foregoing indemnity provisions shall be construed to require the Contractor to indemnify the indemnified party in contravention of Section 2782 of the Civil Code for the active or sole negligence or willful misconduct of that indemnified party.

To the fullest extent permitted by law, the Contractor's duty to defend shall extend, without limitation, to any suit or action founded upon any losses, claims, demands, damages, costs, expenses, attorney's fees, or liability of every nature arising out of or in any way connected with the performance or attempted performance of the provisions hereof, or in any way arising out of or connected with this Contract.

The defense and indemnity obligations expressly extend to and include any and all claims, demands, damages, costs, expenses, or liability occasioned as a result of damages to adjacent property caused by the conduct of the Work.

The defense and indemnity obligations expressly extend to and include any and all claims, demands, damages, costs, expenses, or liability occasioned as a result of the violation by the Contractor, the Contractor's agents, employees, or independent contractors, Subcontractors or suppliers of any provisions of federal, State or local law, including applicable administrative regulations.

The defense and indemnity obligations also expressly extend to and include any claims, demands, damages, costs, expenses, or liability occasioned by injury to or death of any person, or any property damage to property owned by any person while on or about the site or as a result of the Work, whether such persons are on or about the site by right or not, whenever the Work is alleged to have been a contributing cause in any degree whatsoever.

In claims against any person or entity herein indemnified that are made by an employee of the Contractor or an employee of any of the Contractor's agents, independent contractors, Subcontractors or suppliers, a person indirectly employed by the Contractor or by any of the Contractor's agents, independent contractors, Subcontractors or suppliers, or anyone for whose acts the Contractor or any of the Contractor's agents, independent contractors, Subcontractors or suppliers may be liable, the defense and/or indemnification obligation herein shall not be limited by any limitation on amount or type of damages, compensation, or benefits payable by or for the Contractor or the Contractor's agents, independent contractors, Subcontractors or suppliers under workers' compensation acts, disability acts, or other employee benefit acts.

The defense and indemnification obligations herein shall not be limited by any assertion or finding that the person or entity indemnified is liable by reason of a non-delegable duty.

The defense and indemnities set forth herein shall not be limited by the insurance requirements set forth in the Contract.

The defense and indemnification requirements herein set forth shall extend to claims occurring after this Contract is terminated as well as while it is in force.

6-2.02 Indemnification of Adjacent Property Owners

In the event the Contractor enters into any agreement with the owners of any adjacent property to enter upon or adjacent to such property for the purpose of performing this Contract, the Contractor shall fully indemnify, defend and save harmless such person, firm, or corporation, State or other governmental agency which owns or has any interest in the adjacent property. The form and content of the indemnification agreement shall be approved by the City prior to commencement of any work on or about such property. The Contractor also shall indemnify the City and other indemnities identified in Section 6-2.01 as provided in the Contract. These provisions shall be in addition to any other requirements of the owners of adjacent property.

6-3 CONTRACTOR'S LEGAL ADDRESS

Both the address given in the Bid and the Contractor's office in the vicinity of the Work are designated as places that samples, notices, letters, or other articles or communications to the Contractor may be mailed or delivered. The delivery to either of these places shall be deemed sufficient service to the Contractor and the date of such service shall be the date of delivery.

The address named in the Bid may be changed at any time by written notice from the Contractor to the City. Nothing herein shall be deemed to preclude or render inoperative the service of any drawing, sample, notice, letter or other article or communication to the Contractor.

6-4 CONTRACTOR NOT AN AGENT OF CITY

The Contractor shall be an independent contractor and not an employee, agent, or other representative of the City. Nothing in the Contract shall be construed to create any relationship of joint venture, partnership or any other association of any nature whatsoever between the City and the Contractor other than that of owner and independent contractor.

The City shall have the right to direct the Contractor as provided in the Contract. The aforementioned right of supervision shall not reduce or abrogate the Contractor's liability of all damage or injury to persons, public property, or private property that may arise directly or indirectly from the Contractor's execution of the Work.

6-5 SUBSTITUTION OF SUBCONTRACTORS

The Contractor shall comply with the requirements of the Subletting and Subcontracting Fair Practices Act, Chapter 4 of Part 1 of Division 2 of the Public Contract Code, commencing with Section 4100, forbidding bid shopping and bid peddling, requiring accurate listing of all

Subcontractors, and requiring Subcontractors to be licensed. The Contractor shall not, without the written consent of the City: (a) substitute any party as Subcontractor in place of the Subcontractor designated in the original bid; (b) permit any such subcontract to be assigned or transferred; or (c) allow the subcontracted work to be performed by anyone other than the original Subcontractor listed on the bid. Consent for substitution or subletting shall only be given pursuant to Section 4107 of the Public Contract Code. Should the Contractor violate any of the provisions of this Section, the violation shall be deemed a breach of this Contract and the City shall have all remedies provided by California law, including but not limited to those provided in Public Contract Code Section 4110, allowing termination of the Contract or a penalty assessment of ten percent (10%) of the subcontract amount.

6-6 ASSIGNMENT OF CONTRACT

The Contract or the performance of the Contract may be assigned by the Contractor, but only upon written consent of the City and the Contractor's surety, unless the surety has waived its right of notice of assignment. No such assignment or subcontracting shall be permitted that would relieve the Contractor or the Contractor's surety of their responsibilities under the Contract.

6-7 ASSIGNMENT OF MONIES

The Contractor may assign monies due the Contractor under the Contract, and such assignment will be recognized by the City, if given proper notice, to the extent permitted by law. Any assignment of monies shall be subject to all deductions provided for in the Contract. All money withheld may be used by the City for the completion of the Work if the Contractor defaults.

6-8 PROTECTION OF CITY AGAINST PATENT CLAIMS

The Contractor shall assume all costs arising from the use of patented materials, equipment, devices, and processes on or incorporated in the Work and shall indemnify and hold harmless the City and the City's officers, officials, agents, employees, volunteers, members, affiliates and their duly authorized representatives from all actions for, or on account of, the use of any patented materials, equipment, devices, or processes in the construction of, or subsequent operation of, the Work. Before final payment, if requested by the City, the Contractor shall furnish acceptable proof of a proper release from all costs or claims arising from the use of patented materials, equipment, devices, or processes used on or incorporated in the Work.

6-9 RESPONSIBILITY OF THE CONTRACTOR

The Contractor shall be solely responsible for, and have control over, construction means, methods, techniques, sequences, procedures, and coordination of all portions of the Work under the Contract, unless otherwise provided in the Contract.

The Work shall be under the Contractor's responsible care and charge until completion and final acceptance, and the Contractor shall bear the entire risk of injury, loss, or damage to any part by any cause. The Contractor shall rebuild, repair, restore, and make good all injuries, losses or damage to any portion of the Work, equipment or the materials occasioned by any cause, and shall bear the entire expense.

In no case shall the Contractor's use of Subcontractors in any way alter the position of the Contractor or the Contractor's sureties with relation to the Contract. When a Subcontractor is used, the responsibility for every portion of the Work shall remain with the Contractor. No Subcontractor will be recognized as having a direct contractual relationship with the City. All persons engaged in the Work under the Contract will be considered as employees of the Contractor and their work shall be subject to all the provisions of the Contract. The City will deal only with the Contractor who is responsible for the proper execution of the Work. The Contractor shall pay when due all valid claims of Subcontractors, suppliers, and workmen with respect to the Work.

The mention herein of any specific duty or responsibility imposed upon the Contractor shall not be construed as a limitation or restriction of any other responsibility or duty imposed upon the Contractor by the Contract, said reference being made herein merely for the purpose of explaining the specific duty or responsibility.

The Contractor shall do all of the work and furnish all labor, materials, tools, equipment, and appliances, except as otherwise herein expressly stipulated, necessary or proper for performing and completing the Work herein required, including any change order work or disputed work directed by the City in conformity with the true meaning and intent of the Plans, Specifications, and all provisions of the Contract, within the time specified.

If the Contractor discovers any discrepancies during the course of the Work between the Plans and conditions in the field, or any errors or omissions in the Plans and conditions in the field, or any errors or omissions in the Plans, the Specifications, or in the layout given by stakes, points, or instructions, it shall be the Contractor's duty to inform the City immediately, and the City shall promptly verify the same. Any work done after such discovery until authorized by the City, will be done at the Contractor's risk.

6-10 PERMITS AND LICENSES

Except as set forth in the Special Provisions, the Contractor shall, at the Contractor's sole expense, obtain all necessary permits and licenses for the construction of the Work, give all necessary notices, pay all fees required by law, and comply with all laws, ordinances, rules and regulations relating to the Work and to the preservation of the public health and safety. The Contractor shall also procure all permits and licenses necessary for the normal conduct of the Contractor's business and construction operations.

Unless otherwise noted in the Special Provisions, building, plumbing, heating, electrical, and similar permits that the Contractor is required to obtain from the City Building Department for City-owned projects will be obtained by the Contractor at City expense.

The California Environmental Quality Act of 1970 (CEQA) may be applicable to permits, licenses, and other authorizations that the Contractor shall obtain from local agencies in connection with performing the Work. The Contractor shall comply with the provisions of CEQA in obtaining such permits, licenses, and other authorizations, which will be obtained in time to prevent delays to the Work. The Contractor shall also comply with all mitigation measures identified in the Special and/or Technical Provisions.
Contractor shall also furnish the Engineer a copy of a valid, current City of Rocklin Business License obtained at Contractor expense prior to the commencement of the work.

6-11 GENERAL SAFETY REQUIREMENTS

6-11.01 Compliance With Safety & Health Regulations

Safety is a prime consideration in all City contracts. The Contractor shall conform to all applicable occupational safety and health standards, rules, regulations, and orders established by the State of California or Federal Government. In no case shall the City or any of its agents, officials, officers, employees, independent contractors or representatives have either direct or indirect responsibility for the means, methods, techniques, sequences or procedures utilized by the Contractor, or for safety precautions and programs in connection with the Work, or for maintaining any safety or health conditions on the site, or for ensuring against or correcting any hazardous conditions on the site. The City or any of its agents, employees or independent contractors may call to the attention of the Contractor any safety, health or hazardous conditions at the site but, by doing so, does not assume any liability or responsibility for remediation or correction of the condition, which liability and responsibility lie solely with the Contractor.

The Contractor shall, upon request, submit to the City a copy of its Injury Illness Prevention Program (IIPP) (including Site Safety Plan and Code of Safe Work Practices) and all updates and revisions to the IIPP for review. The Contractor is required to fulfill the requirements of these programs during the prosecution of the work.

6-11.02 24-Hour Contact Information

The Contractor shall have on record with the City the following twenty-four (24) hour emergency contact numbers:

- Traffic control device supplier: Supplier of barricades, steel plates, delineators, channelizers, construction signs, and other traffic control equipment to be used during construction.

- Contractor representative: An employee of the Contractor having the authority to make decisions and the ability to respond to an emergency on the project at any time.

- Safety representative: The Contractor's Safety Representative shall have the authority to make decisions regarding safety and health concerns on the project and to direct the Contractor's personnel to abate any hazard identified by the City.

6-11.03 Work During Hours of Darkness

Working areas utilized by the Contractor during the hours of darkness shall be illuminated to conform to the minimum illumination intensities established by Cal-OSHA, Construction Safety Orders and the Traffic Control Plans (TCP).

6-12 PUBLIC CONVENIENCE AND SAFETY

6-12.01 Public Convenience

All work within public streets and/or roadway rights-of-way shall be done in an expeditious manner and cause as little inconvenience to the traveling public as possible. Vehicles, bicycles, and pedestrians must be allowed to pass at all times except during an emergency closure. See Section 7-8, “Peak Hours, Hours of Darkness, Holidays and Weekends”, of these General Provisions for time limitations.

6-12.02 Pedestrian and Bicyclist Access

The Contractor shall not block the movement of pedestrian or bicycle traffic. The Contractor shall provide for pedestrian and bicycle traffic by phasing construction operations or by providing alternative pedestrian and bicyclist access through or adjacent to construction areas. Proper advance notice signage with reasonable detours shall be installed and maintained through all phases of construction. Access to pedestrian and bicycle devices at traffic signals shall be maintained at all times. At no time shall pedestrians be diverted into a portion of the street used for vehicular traffic or on to private property unless adequate lane closure signage is in place. Pedestrian and bicycle access shall consist of four-foot (4’) wide bridges across trenches and four-foot (4’) wide passageways through construction areas. Hand railings for pedestrians shall be provided when required by Cal/OSHA Regulations or the Americans with Disabilities Act (ADA) on each side of each bridge or passageway to protect pedestrians from hazards caused by construction operations or adjacent vehicular traffic. Railings or barricades, which border passageways located in roadway areas, shall be reflectorized on the side facing oncoming traffic. The provisions of this section 6-12.02 shall apply absent written approval from the City to the contrary.

6-12.03 Written Notification To Residences and Businesses

The Contractor shall notify, in writing, residents and business establishments along the route of the Work at least ten (10) Working Days prior to road closures and at least two (2) Working Days prior to disruption of ingress and egress. The notice provided to the residences or businesses shall include, at a minimum, schedule of closures with estimated closure times, closure location, alternate route or detour, and name and twenty-four (24) hour phone number of a contact person employed by the Contractor.

The Contractor shall notify, in writing, residents and business establishments along the route of the Work at least two (2) Working Days prior to placing parking restrictions within the City right-of-way. The notice provided to the residences or businesses shall include, at a minimum, schedule of parking restrictions with estimated times, location, and a name and twenty-four (24) hour phone number of a contact person employed by the Contractor.

6-12.04 Access To Driveways, Houses and Buildings

Access and passable grades shall be maintained to the extent feasible for business establishments and residents during construction. Safe and passable pedestrian, bicyclist, and vehicular access shall be provided and maintained. Access shall be continuous and unobstructed unless otherwise approved and shall be ADA compliant. When abutting property owner’s access across the right-of-way line is to be eliminated, repaired, or replaced under the

Contract, the existing access shall not be closed until the replacement access facilities are completed and functional or suitable temporary access facilities are installed.

6-12.05 Property Damage

Any property damage caused by the Contractor shall be repaired at the Contractor's expense to the satisfaction of the City.

Pursuant to Public Contract Code Section 9201, the City shall provide the Contractor with timely notification of any third-party claims received by the City relating to this Contract. Such notification shall not create any rights or obligations on the part of the City to respond or otherwise act on behalf of the Contractor with respect to such third-party claims.

6-12.06 Erection of Signs To Expedite Passage of Vehicles

The Contractor shall erect such warning and directional signs as necessary or as directed by the City for expediting the passage of public traffic through or around the Work and the approaches. All warning and directional signs shall comply with the current version of the California-MUTCD.

6-12.07 Traffic Obstructions, Delays and Inconveniences

All public traffic shall be permitted to pass through the Work and the Contractor shall conduct operations that offer the least possible obstruction, delay, and inconvenience to the public.

6-12.08 Work On Private Property

The Contractor must obtain written permission from the owner of any privately owned property prior to beginning any work, storing materials or otherwise conducting any operations on said property. The written approval from the property owner must be on file with the City before any operations will be permitted on said property.

6-12.09 Hazardous Conditions Created

Whenever the Contractor's operations create a condition hazardous to pedestrians, bicyclists, or the traveling public, the Contractor shall, at the Contractor's own expense, furnish, erect and maintain any fences, covers, temporary railing (Type K), barricades, lights, signs and other devices necessary or as directed by the City to prevent accidents or damage or injury to the public or property.

If needed for public use, roadway excavation shall be conducted to maintain a smooth and even surface satisfactory for use by public traffic at all times. The surface of the roadbed shall be kept in a smooth, even condition free of humps and depressions, satisfactory for the use of public traffic as determined by the City.

Temporary facilities that the Contractor uses to perform the Work or store or stage material or equipment shall not be installed or placed where they will interfere with the free and safe passage of public vehicular, bicycle, or pedestrian traffic.

6-13 PUBLIC SAFETY AND TRAFFIC CONTROL

6-13.01 General

All traffic controls shall be installed in accordance with the latest edition of the Caltrans "California-MUTCD."

6-13.02 Responsibility For Safety

It is the Contractor's responsibility to provide for public safety and traffic control. The City may review the Contractor's operations and inform the Contractor if an unsafe or hazardous condition is observed. The Contractor may be directed verbally or via Field Directive, letter, email, or other means to abate the hazard. The Contractor must comply with all directives for hazard abatement immediately and within the timeframe imposed by the City.

6-13.03 Passage of Emergency Vehicles

The Contractor shall provide for the uninterrupted passage of emergency vehicles through the Work zone at all times regardless of the controlled traffic conditions in place at the time.

6-13.04 Furnishing, Installing, and Maintaining Traffic Controls

Appropriate traffic control shall be furnished by the Contractor to provide an adequate warning to the public of dangerous conditions to be encountered during construction at all hours of the day or night. Warning and directional signs shall be erected and maintained as required by the City and by law. All traffic controls shall be installed as required by the Specifications.

6-13.05 Inadequate Traffic Controls and After-Hour Maintenance and Repairs

Should the Contractor appear negligent in furnishing and maintaining sufficient traffic control devices or protective measures or fail to provide flaggers as necessary to control traffic, the City may direct the Contractor, at the Contractor's expense, to abate the hazard.

Should the City identify the inadequacy of warning devices and protective measures, that action shall not relieve the Contractor from responsibility for public safety or abrogate the obligation to furnish and pay for these devices and measures.

Should the Contractor fail to properly furnish or maintain traffic controls, or correct a hazard caused by inadequate or inappropriate traffic control, the City will abate the hazard. All City costs to abate the hazard shall be reimbursed by the Contractor or deducted from the progress payment. If the Contractor is not available to perform after-hour maintenance and repair to traffic control devices, the City will correct the situation and deduct all costs from the progress payment.

6-13.06 Competent Flaggers

The Contractor shall provide competent and professional flaggers to control traffic when necessary or requested by the City. All flaggers shall be trained as required by Cal-OSHA

regulations and shall be prepared to provide verification of such training to the City when requested.

6-13.07 Construction Signs

The Contractor is responsible for supplying, installing, and maintaining all construction signs and posts. The Contractor will receive direction from the City as to the specific locations and placement of each sign. Regulatory signs or guide signs shall be supplied, erected, and maintained by the Contractor, subject to City approval, and shall be protected from damage from construction activities by the Contractor throughout the duration of the Project.

6-13.08 Temporary Bridging of Excavations and Trenches

Whenever necessary or requested by the City, excavations shall be bridged with steel plates to allow an unobstructed flow of traffic.

1. Asphalt concrete "cutback" shall be placed around the edges of the plate to provide a ramp and smooth transition from the pavement to the plate to minimize wheel impact. All ramping must be accomplished to provide a minimum angle of approach of twelve horizontal to one vertical (12H:1V).

2. Bridging shall be secured against displacement by using railroad spikes or other approved fastening devices.

3. Bridging shall be placed and secured to work to minimize noise levels.

4. Steel plates used for bridging shall extend at least one (1) trench width on each side beyond the edges of the trench. Any deviations from these requirements must be designed by a registered engineer and reviewed by the City.

5. Depending upon the depth of the excavation, soil type, vibration, and other variables, the trench may require shoring to support bridging. The excavation shall be designed by a State Registered Civil Engineer or other appropriate professional if there is any question about the capability of the excavation and bridging to support the forces of traffic.

WIDTH OF EXCAVATION	MINIMUM THICKNESS OF STEEL PLATES
2.0 ft. or less (0.6 m or less)	7/8 inch (22 mm)
3.0 ft. (0.9 m)	1 inch (25 mm)
4.0 ft. (1.2 m)	1-1/4 inch (32 mm)

In sidewalk areas, one and one-eighth inch (1-1/8") plywood may be substituted for steel plating. Such plywood shall be secured to prevent removal by unauthorized persons. Asphalt concrete "cutback" or other non-displaceable material must be used to provide a ramp for pedestrian and handicap access. All ramping must be accomplished to provide a minimum angle of approach of twelve horizontal to one vertical (12H:1V). Vehicular travel over backfilled but unpaved excavations will not be allowed, unless the Contractor provides a

temporary surface suitable for driving consisting of at least two inches (2”) of plant mix asphalt over six inches (6”) of aggregate base, concrete slurry (completely cured), or traffic plates placed over the excavated area of sufficient width and thickness as indicated in this Section.

6-13.09 Entering and Leaving the Construction Zone

Construction equipment shall enter and leave the roadway by moving in the direction of public traffic. All movements of workmen and construction equipment on or across lanes open to public traffic shall be performed in a safe manner that will not endanger the workmen or the public. When leaving a work area and entering a roadway carrying public traffic, the Contractor's equipment operators shall yield to public traffic.

6-13.10 Existing Traffic Signals and Lighting Systems, Signs and Pavement Markings

Existing traffic signals and highway lighting systems shall be kept in operation during progress of the Work. When traffic signal shutdown is permitted by the City, the Contractor shall notify the City at least five (5) Working Days prior to shut down. Traffic signal detectors accidentally cut or damaged during construction shall be repaired or replaced by the Contractor at the Contractor’s expense and be operational within seventy-two (72) hours. When traffic signals are approved for shutdown, the Contractor shall control traffic by use of flaggers as directed by the City. “STOP” signs will not be permitted at these locations, unless allowed by the City.

Existing signs and pavement markings shall be maintained by the Contractor and shall not be removed or altered without City approval.

6-13.11 Bus Stops

If construction operations will obstruct a bus stop, the Contractor shall notify the Transit provider five (5) Working Days in advance of beginning that portion of the Work and make provisions agreeable to the transit provider to provide an alternate location where people can safely board the bus.

6-13.12 Dust

Water or dust palliative shall be applied if ordered by the City for the alleviation or prevention of dust nuisance caused by the Contractor's operations as provided Chapter 10 of these General Provisions.

6-13.13 Removal of Spillage From Roadway

The Contractor shall immediately remove any spillage resulting from hauling operations along or across any public traveled way.

6-14 CONFINED SPACES

6-14.01 Contractor Responsibilities and Qualifications

When working in a confined space, the Contractor shall comply with all confined space requirements of Title 8, General Industry Safety Orders (Cal-OSHA), Article 108, Sections 5156 through 5159.

Prior to any confined space entry, the Contractor shall submit for City review:

1. The Contractor's procedures for confined space operations.

2. Copies of all documents and certificates that qualify the Contractor to safely perform work in permit-required confined spaces. The Contractor shall also submit all applicable Material Safety Data Sheets (MSDS) and hazard information on chemicals, products, materials, or procedures.

3. Sufficient documentation and evidence that a permit-required confined space entry can be made in accordance with Article 108. Documentation shall include, but not be limited to the following:

    - Equipment availability, suitability, and integrity.
    - Personnel training.
    - Experience.
    - Supervision.
    - Safety.
    - Accident experience.
    - Permit-required confined space policy.
    - Hot work procedures (if applicable).
    - Lock-out/tag-out procedures (if applicable).

The Contractor's submittal shall be made thirty (30) Calendar Days prior to any confined space entry in accordance with Section 5-8, "Contractor's Submittals," of these General Provisions.

The Contractor will not be allowed to make a permit-required confined space entry until the City has reviewed the Contractor's qualifications and proposed methods.

The Contractor shall conform to the procedures established by the Contractor's submittal during all confined space operations. The Contractor shall provide all monitoring and safety equipment necessary to perform pre-entry checks of confined spaces. The Contractor shall also provide all monitoring, safety, and communications equipment required for confined space operations.

6-14.02 Existing Sewers and Storm Drains

Because of the potential danger of solvents, gasoline, and other hazardous material in existing sewers and storm drainpipes, these areas shall be treated as permit-required confined spaces unless it has been proven, through appropriate testing, that no hazards exist or are expected to develop.

6-14.03 Joint City – Contractor Entries

Unless otherwise directed in writing by the City, when City employees work alongside the Contractor in a permit-required confined space, the permit procedures for both the City and the Contractor shall be used. The Entry Supervisor shall coordinate the requirements of both permit procedures prior to entry.

6-15 TRAFFIC CONTROL PLANS (TCP)

6-15.01 Traffic Pattern Changes

The Contractor shall notify the City in advance of the Contractor's desire to change any existing traffic patterns. Traffic lanes for public use shall be at least ten feet (10') in width. Whenever feasible an additional four feet (4') shall be provided for a bicycle lane. If it is not feasible to provide a separate bicycle lane, the Contractor shall post signage before the construction area stating, "SHARE the Road with Bicyclists." Additionally, when the lane is shared, the Contractor shall post signage for a maximum speed limit of 25 MPH in the shared lane. For traffic pattern changes that do not require a road closure, the Contractor shall provide the City with a minimum of five (5) Working Days advance notification, unless otherwise approved or deemed an emergency lane closure by the City. For all road closures, the Contractor shall provide the City with a minimum of twenty (20) Working Days' notice prior to the desired closure date, unless otherwise approved or deemed an emergency road closure by the City.

6-15.02 Traffic Control Plans (TCP)

The Contractor shall submit a Traffic Control Plan (TCP) to the City for review. The TCP shall show traffic control measures to be used for vehicles, bicyclists, and pedestrians affected by the construction. Five (5) sets of the TCP shall be submitted on eleven-inch by seventeen-inch (11"x17") (minimum) paper. The Contractor will not be allowed to begin work associated with the road or lane closure until the TCP is reviewed by the City.

TCPs will be reviewed and returned within twenty (20) Working Days.

The City reserves the right to extend the review period or request and review a TCP if special conditions warrant.

Detours used exclusively by the Contractor for hauling materials and equipment shall be constructed and maintained by the Contractor at the Contractor's expense. If the Contractor's operations are damaging the roadway, the City has the authority to regulate the Contractor's operations and direct the Contractor to repair the roadway at the Contractor's expense.

6-16 BARRICADING OPEN TRENCHES

Any excavation permitted by the City to be left open shall be barricaded with Type I, Type II, or Type III barricades with reflective tape and flashers as approved or directed by the City. Signs stating “OPEN TRENCH” shall be posted when requested by the City. All open excavated areas shall be barricaded with at least two (2) Type III barricades at the end of the excavation that faces oncoming traffic. Any excavation within four feet (4’) of the traveled way, not protected by K-rail or a similar traffic control barrier approved by the City, shall be backfilled at the end of the work shift or plated in accordance with Section 6-13.08, “Temporary Bridging of Excavations and Trenches,” in this Section of these General Provisions.

6-17 EXISTING UTILITIES

6-17.01 General

The Contractor shall coordinate and fully cooperate with the City and utility owners for the location, relocation, and protection of utilities. The Contractor’s attention is directed to the existence of utilities, underground and overhead, necessary for all buildings in the Work area. The Contractor shall arrange with utility owners for the location of service lines serving these buildings in advance of the actual construction and for the relocation of such facilities, if necessary, by the utility owner or the Contractor.

6-17.02 Maintenance and Protection

Unless otherwise shown or specified in the Contract, the Contractor shall maintain in service all drainage, water, gas, sewer lines, power, lighting, telephone conduits, and any other surface or subsurface utility structure that may be affected by the Work. However, the Contractor, for convenience, may arrange with individual owners to temporarily disconnect service lines or other facilities along the line of the Work. The cost of disconnecting and restoring such utilities shall be borne by the Contractor.

Unless otherwise specified in the Special Provisions, the Contractor shall protect all existing utilities on all projects being constructed, whether inside or outside of highway rights-of-way. The utility owner in these cases may elect to provide the necessary protective measures and bill the Contractor for the cost. “Existing utilities” includes traffic control devices, conduits, streetlights, and related appurtenances. Existing utility facilities that are to be relocated, including traffic signals and light poles, shall be relocated prior to paving. No paving shall be performed around existing utility facilities that are to be relocated.

6-17.03 Exact Locations Unknown

The locations of existing utility facilities shown on the Plans are approximate and represent the best information obtainable from utility maps and other information furnished by the various utility owners involved. The City warrants neither the accuracy nor the extent of actual installations as shown on the Plans. There may be additional utilities on the property unknown to either party to the Contract. If, during the course of the Work, additional subsurface utilities are discovered, the City may make adjustments to the Work. Compensation for such adjustments will be in accordance with Chapter 9, “Changes and Claims”, of these General Provisions.

In accordance with Government Code Section 4215, the City will compensate the Contractor for the costs of locating, repairing damage not due to the failure of the Contractor to exercise reasonable care, removing, relocating or protecting existing main or trunk line utility facilities not indicated in the Plans and Specifications with reasonable accuracy, and for equipment on the Work necessarily idled during such work. In no event shall the City be liable for any further or additional costs resulting directly or indirectly from any such occurrence.

Compensation will be in accordance with Chapter 9, “Changes and Claims”, of these General Provisions. Nothing herein shall be deemed to require the City to indicate the presence of existing utility services, laterals, or appurtenances whenever their presence can be inferred from other visible facilities such as buildings, meters, junction boxes, valves, service facilities, identification markings, and other indicators on or adjacent to the Work.

If the Contractor discovers utilities not identified in the Plans or Specifications, the Contractor shall immediately notify the City and the utility owner by the most expeditious means available and later confirm in writing. If the completion of the Work is delayed by failure of the City or the utility owner to remove, repair, or relocate the utility, such delay may be an excusable delay as defined and provided for in Section 7-12.02, “Excusable Delays”, of these General Provisions. Nothing herein shall preclude the City from pursuing any appropriate remedy against the utility for delays that are the responsibility of the utility. The Contractor shall not be assessed liquidated damages for delay in completion of the Work for that portion of such delay as is caused by failure of the City or the owner of a utility to provide for the removal or relocation of existing utilities.

6-17.04 Underground Service Alert (USA)

The City is a member of the Underground Service Alert North (U.S.A.) one-call program. Except in an emergency, the Contractor and any Subcontractor planning to conduct any excavation shall notify the U.S.A. at least two (2) Working Days, but no earlier than fourteen (14) Calendar Days, in advance of performing excavation work. U.S.A. can be reached by calling 811 or going to www.usanorth811.org. U.S.A. does not accept emergency calls. For emergency repairs, the Contractor or any Subcontractor planning to conduct an excavation, must contact the designated City representative. The provisions of Government Code Sections 4216 through 4215.9, inclusive, shall be followed.

Each phase of the Project shall be called into U.S.A. and continuing excavation reported every fourteen (14) Calendar Days. The Contractor shall not call into U.S.A. the entire Project boundaries or, on road construction projects, the entire length of the project. The excavator shall only request the marking of facilities within the area to be excavated within fourteen (14) Calendar Days of the call. U.S.A. will provide an inquiry identification (“Ticket”) number to the person contacting the center. The U.S.A. ticket number shall be available to the Inspector at the job site along with the date U.S.A. was called. If the U.S.A. notifications are not kept up-to-date, the excavation will be stopped, and a new two (2) Working Day notice will be required before continuing the excavation. If, at any time during an excavation for which there is a valid ticket number, the field markings are no longer reasonably visible, the Contractor shall contact U.S.A.to have the area re-marked. The Contractor shall allow two (2) Working Days for re-marking of facilities.

Prior to calling U.S.A., the Contractor shall clearly mark the excavation site with white, water-soluble, or spray chalk paint in paved areas or place flags, stakes, whiskers, or some other approved method in unpaved areas. The Contractor shall determine the exact location (twenty-four inches (24") from outside edge on either side of the facility) of utilities in conflict with the proposed excavation by exposing the subsurface installation with hand tools before using any power-operated or power-driven equipment. The Contractor is responsible for protecting operators' markings or markers until they are removed.

Prior to Final Acceptance, all U.S.A. markings shall be removed by the Contractor to the satisfaction of the City. During the progress of the Work, markings shall be removed by the Contractor to the satisfaction of the City. During the progress of the Work, markings or markers shall be removed within two (2) months of the date the markings or markers are no longer needed or upon completion of the work, whichever comes sooner. The City will accept natural weathering of the markings if the markings disappear within the two-month period or prior to Final Acceptance. If the markings are in brick pavers or concrete areas and if, by natural weathering or other approved removal methods, the markings still remain, the Contractor must replace the concrete or the brick pavers in-kind, unless the utility operator has failed to use chalk-based paint or other non-permanent marking materials. Contractors and utility operators are encouraged to avoid marking in these areas by using offset markings. Removal methods shall be non-destructive and residual shadowing shall not remain.

Removal of markings shall comply with requirements of any applicable Federal, State, and local laws, rules, or regulations.

U.S.A. markings not removed by the required time lines may be removed and the sidewalk or street repaired/replaced by the City at its discretion. The City will charge the Contractor a service fee equal to the actual costs of removal for removing the markings and making any repairs and/or replacements. This fee will include the cost to comply with any applicable Federal, State, and local laws, rules, or regulations.

6-17.05 Damage to Existing Utilities

The Contractor shall notify the affected utility of any contact, scrape, dent, nick, or damage to their facility. Any operator or excavator who negligently violates Government Code Section 4215 is subject to a civil penalty in an amount not to exceed ten thousand dollars ($10,000). Any operator or excavator who knowingly and willfully violates Government Code Section 4215 is subject to a civil penalty in an amount not to exceed fifty thousand dollars ($50,000).

6-17.06 Markings

The following table designates color codes and symbols that shall be used by the Contractor and the utility owners to identify utilities:

FIELD MARKINGS		
COLOR CODES AND SYMBOLS		
Color	**Symbol Name**	**Name**
Safety Precaution	W	Water

FIELD MARKINGS		
COLOR CODES AND SYMBOLS		
Blue		
Safety Alert Orange	FA Tel R TV WU	Fire Alarm Telephone/Communication Railroad Television/CATV Western Union
Safety Green	S D	Sewer Storm Drain
Safety Red	L E T	Street Lighting Electric Traffic Signals
High Visibility Safety Yellow	G Company Name	Gas Oil or Chemical Steam
Purple	RW	Reclaimed Water
Pink/Fuchsia	TSM	Temporary Survey
White	USA	Proposed Excavation – Paint outline of proposed excavation area with white dotted line

6-18 APPROVAL OF CONTRACTOR'S PLANS NO RELEASE FROM LIABILITY

The review or approval by the City of any submittal, working drawing or any method of work proposed by the Contractor shall not relieve the Contractor of any of the Contractor's responsibility for any errors and shall not be regarded as any assumption of risk or liability by the City or any officer, official, agent, employee, member, volunteer, affiliate, or their duly authorized representatives. The Contractor shall have no claim under the Contract because of the failure or partial failure or inefficiency of any reviewed or approved plan or method. City review or approval means that the City has no objection to the Contractor using the proposed plan or method at the Contractor's responsibility and risk.

6-19 CONTRACTOR SHALL NOT MORTGAGE EQUIPMENT

The Contractor shall not mortgage or otherwise convey the title of the plant, machinery, tools, appliances, supplies, or materials that may at any time be in use, or further required or useful, in the prosecution of the Work, without prior written consent of the City.

6-20 PROPERTY RIGHTS IN MATERIALS

Nothing in the Contract shall be construed as vesting in the Contractor any right of property in the materials used after they have been installed, attached or affixed to the Work, and on which partial payments have been made by the City. All such materials shall be the property of the Contractor and the City jointly as their interests may appear, and shall not be removed from the Work by the Contractor without the City's consent.

6-21 EXCAVATION AND TRENCH SAFETY

6-21.01 Permit

The Contractor must obtain a permit from the Division of Industrial Relations per Labor Code Section 6500, as specified in California Code of Regulations, Title 8, Article 6, Section 1539 “Permits” of the Construction Safety Orders, for all excavations five feet (5’) or deeper to which an employee is required to descend. The permit shall be kept at the construction site at all times.

6-21.02 Shoring, Bracing. Shielding, and Sheeting

In accordance with Labor Code Section 6705, at least five (5) Working Days in advance of excavation of any trench or trenches five feet (5’) or more in depth, with a total value of twenty-five thousand dollars ($25,000) or more, the Contractor shall submit to the City a detailed plan showing the design of shoring, bracing, sloping, or other provisions for worker protection from the hazard of caving ground during the excavation of such trench or trenches. If such plan varies from the shoring system standards, the plan shall be prepared by a California Licensed Professional Civil or Structural Engineer. A signed copy of the detailed plan shall be on the site at the time of the excavation. Nothing in this Section shall be deemed to allow the use of a shoring, sloping, or protective system less effective than that required by the Construction Safety Orders. Nothing in this Section shall be construed to impose tort liability on the City or any of its employees. These systems must support the sides of the excavation and prevent soil movement that could cause injury to any person or structure. Any damage resulting from a lack of adequate shoring, bracing, shielding or sheeting shall be repaired at the Contractor's expense.

The Contractor shall immediately replace or repair any unsafe ladder, scaffolding, shoring, or bracing, or correct any other dangerous or hazardous situation that exists.

A Competent Person, as defined in California Code of Regulations, Title 8, Construction Safety Orders, Section 1504, “Definitions,” shall be on site at all times when the Contractor's employees are working within the trench. A "Competent Person" is one who is capable of identifying existing and predictable hazards in the surroundings, or working conditions which are unsanitary, hazardous, or dangerous to employees, and who has authorization to take prompt corrective measures to eliminate them.

The price bid for work that will require an excavation of five feet (5’) or deeper (or less if conditions warrant) shall include the cost of adequate sheeting, shoring, and bracing, or equivalent method conforming to applicable safety orders, unless a separate Bid Item for such work is included in the bid form.

6-22 PRESERVATION OF PROPERTY

Trees and shrubbery that are to remain, pole lines, fences, signs, traffic control devices, striping, survey markers and monuments, buildings and structures, conduits, under- or above-ground pipelines, and any other improvements and facilities shall be protected from injury or damage. If ordered by the City, the Contractor shall provide and install suitable safeguards to protect such objects from injury or damage. If such objects are injured or damaged by reason of the Contractor's operations, said objects shall be replaced or restored at the Contractor’s

expense to a condition as good as when the Contractor entered upon the Work. The Contractor shall receive City approval before the removal of any road sign or permanent traffic control device that interferes with the Work.

6-23 OVERLOADING

The Contractor shall determine safe loading capacities and shall not overload any structure, equipment, pavement, or material beyond its safe capacity, or significantly deteriorate the preconstruction condition, during construction. In addition to assuming full responsibility for bodily injury resulting from any such overloading, the Contractor shall repair to the City's satisfaction or reimburse the City for the costs of repairing the damage. For pavement assessment prior to construction, contact the City Public Works Department.

CHAPTER 7 - PROSECUTION OF THE WORK

TABLE OF CONTENTS

Section **Page**

7-1 BEGINNING OF WORK 85
7-2 AMOUNT OF WORK UNDER CONSTRUCTION 85
7-3 PRECONSTRUCTION CONFERENCE AND PROGRESS MEETINGS 85
7-4 WORK TO BE UNDERTAKEN WITH ADEQUATE SUPERVISION, LABOR FORCE, EQUIPMENT AND METHODS 85
7-4.01 Superintendence 86
7-4.02 Labor 86
7-4.03 Equipment and Methods 86
7-5 SCHEDULES 86
7-5.01 Baseline (Contract) Schedule 87
7-5.02 Progress Schedules 89
7-5.03 Schedule Revisions 90
7-5.04 Short Interval Schedules 90
7-5.05 Float 91
7-5.06 City's Right to Revise the Schedule 91
7-5.07 Responsibility for Completion 91
7-6 UNUSUAL SITE CONDITIONS 92
7-7 PURSUANCE OF WORK DURING INCLEMENT WEATHER 93
7-8 PEAK HOURS, HOURS OF DARKNESS, HOLIDAYS, AND WEEKENDS 93
7-8.01 Allowable Times and Hours of Work 93
7-8.02 Off-Period Work 93
7-8.03 Emergency Repairs 93
7-8.04 Revocation of Permission For Off-Period Work 94
7-8.05 Working Shifts 94
7-9 TEMPORARY FACILITIES AND SERVICES 94
7-10 PROTECTION OF WORK, PERSONS AND PROPERTY 94
7-11 PROOF OF COMPLIANCE WITH CONTRACT 94
7-12 DELAYS 94
7-12.01 Inexcusable Delays 94
7-12.02 Excusable Delays 95
7-13 NOTICE OF DELAYS 95
7-14 CARELESS DESTRUCTION OF STAKES AND MARKS NO CAUSE FOR DELAY 96
7-15 TIME OF COMPLETION 96
7-16 EXTENSION OF TIME NOT A WAIVER 96
7-17 INCLEMENT WEATHER AND CONTRACT TIME 96
7-18 EXTENSION OF TIME 96
7-19 SUBSTANTIAL COMPLETION 97
7-20 CLEANING UP 97
7-21 FINAL INSPECTION AND FIELD ACCEPTANCE 97
7-22 FINAL ACCEPTANCE AND NOTICE OF COMPLETION 98
7-23 WARRANTY WORK 98

CHAPTER 7 PROSECUTION OF THE WORK

7-1 BEGINNING OF WORK

No work may take place prior to receipt of the executed Contract and review of the prescribed bonds and insurance. Upon receipt of the executed Contract and approval of the bonds and insurance by the City, a Notice to Proceed will be issued which will constitute authorization to begin work. The counting of Contract Time shall begin upon issuance of the Notice to Proceed or other date as specified in that notice.

7-2 AMOUNT OF WORK UNDER CONSTRUCTION

The Contractor shall not have more work under construction than can be undertaken properly with regard to the rights of the public and the safety and integrity of the Project.

7-3 PRECONSTRUCTION CONFERENCE AND PROGRESS MEETINGS

Prior to beginning work, but within ten (10) working days of issuance of the Notice to Proceed, a preconstruction conference shall be held for the purpose of reviewing the Work. The Contractor must attend this preconstruction conference, and shall invite Subcontractors and others necessary to ensure all topics are adequately covered. Topics discussed include, but are not limited to, mobilization, access, temporary facilities, utilities, subcontractors, schedules, procedures, correspondence, progress payments, payroll records, Storm Water Pollution Prevention Plans (SWPPP), coordination, safety, after-hour contacts for Contractor and City personnel, quality control/quality assurance, personnel assignments, and other topics as appropriate.

Progress meetings, as stipulated in the Special Provisions or as required by the City, will be conducted throughout the duration of the Contract. The purpose of these meetings is to inform, discuss, and resolve issues related to the Work; the Contractor or the Contractor's agent shall attend. Topics discussed include, but are not limited to, progress, schedules, safety, SWPPP, RFI's, Change Orders, Field Directives, field coordination, submittals, quality control/quality assurance, testing, startup, safety, and other topics related to the Work.

The City may prepare minutes of all meetings. If minutes are prepared, the City will endeavor to send them to Contractor within two (2) Working Days. Contractor will endeavor to respond within two (2) Working Days with any corrections to the minutes, and any portion of the minutes not corrected by Contractor will be deemed as accurate. The City or Contractor may audiotape or videotape these meetings to create a record of the meeting, and a copy of any tape recordings shall be provided as part of the minutes.

7-4 WORK TO BE UNDERTAKEN WITH ADEQUATE SUPERVISION, LABOR FORCE, EQUIPMENT AND METHODS

The Contractor shall undertake the Work under the Contract with all materials, tools, machinery, apparatus, and labor necessary to complete the Work as described, shown, or reasonably implied under the Contract, or as directed by the City, on or before the scheduled Contract Completion Date.

If Contractor is not diligently proceeding with the prosecution of the Work as set forth in the construction schedule (see Section 7-5, “Schedules”, of these General Provisions), Contractor shall, immediately and at no additional cost to City, take all measures necessary to ensure completion within the Contract Time, including but not limited to increasing the number of employees, working overtime, working additional shifts or crews, and working Saturdays, Sundays, or holidays, subject to other requirements in these provisions.

7-4.01 Superintendence

The Contractor shall keep on the Work, throughout its progress, a competent superintendent who shall have complete authority to represent and act for the Contractor. Such superintendent shall be capable of reading and understanding the Contract, and shall receive and follow any instruction given by the City.

Whenever the Contractor or the Contractor’s superintendent is not present on a particular part of the Work where it may be desired to give direction, orders will be given by the City and shall be received and obeyed by the foreman or other representative who may have charge of the particular work in reference to which the orders are given, or the City may stop the work until the Contractor or the Contractor's superintendent arrives.

7-4.02 Labor

Workers, laborers, or mechanics skilled in each class of work shall accomplish every part of the Work. The Contractor is responsible for the efficiency, safety and adequacy of its labor force and those of all Subcontractors.

7-4.03 Equipment and Methods

Only equipment and methods suitable to produce the quality required by the Contract will be permitted to operate on the Work. Except as specified in Section 5-7, “Contractor’s Equipment”, of these General Provisions, or in the Special Provisions or Technical Specifications, equipment shall be that used in general practice for the work undertaken. If any part of the Contractor's plant, equipment, or methods of executing the Work is unsafe, inefficient, or inadequate to ensure the required quality or rate of progress of the Work, the City may order the Contractor to modify the Contractor’s facilities or methods. The Contractor shall promptly comply with such orders at the Contractor’s expense. However, neither compliance with such orders nor failure of the City to issue such orders shall relieve the Contractor from the obligation to secure the degree of safety, the quality of the Work, and the rate of progress required by the Contract. The Contractor is responsible for the safety, adequacy, and efficiency of its plant, equipment, and methods.

7-5 SCHEDULES

The Contractor shall submit a baseline schedule and updated schedules in accordance with this Section 7-5 and Section 5-8, “Contractor’s Submittals”, of these General Provisions, which shall illustrate the Contractor’s planned schedule for carrying out the Work and completing the Work within the Contract Time. The Contractor’s updated schedules shall show the as-built schedule for work completed.

All schedules must show completion by any milestone dates required in the Contract Documents and the Contract Completion Date. Contractor expressly waives any early completion delay claim. Contractor has the right to try to complete the Work ahead of any milestone date and/or the Contract Completion Date, but if Contractor is somehow delayed from doing so, Contractor may not base a claim for additional compensation on such delay.

Contractor acknowledges that a purpose of submitting reasonable, accurate and adequate schedules is to protect the City and Contractor against unjustified delay and disruption claims or unjustified rejections of such claims. Contractor agrees to devote all resources necessary to provide scheduling services, as with any other item of Work on the project. Contractor agrees that its failure to submit reasonable, accurate and adequate schedules will bar claims by Contractor for additional compensation and/or time extensions based on the information contained in such a schedule, including but not limited to delay, disruption or inefficiency claims.

The City will review all schedules for conformance with the Contract. City review and/or approval of a schedule does not relieve the Contractor of responsibility for the feasibility of the schedule or for accomplishing milestones and completion within Contract Time, nor does City review and/or approval warrant or acknowledge the reasonableness of the schedule's logic, durations, labor estimates, or equipment productivity. City review and/or approval of a schedule does not indicate approval by the City of the schedule, nor does it relieve Contractor of responsibility for any characteristics of the schedule that breach the Contract or that are unreasonable, inaccurate, inadequate, or deficient.

If no separate item is provided in the Bid Form for scheduling, the cost for preparing the baseline schedule and preparing updates and revisions of the baseline schedule shall be included in payments for mobilization. If no bid item for mobilization is included in the Bid Form, conformance with this provision is incidental to and included in the various bid items and no additional payment will be made. Updates and revisions of the schedules are included in the prices paid for other items of work.

Because the City places a high value on the importance and use of project scheduling information as a management tool in achieving the completion of the Work as planned, the City will deduct 10 percent (10%) of the monthly progress payment, but not more than twenty-five thousand dollars ($25,000), for failure by the Contractor to timely obtain the approved Contract Schedule or to any monthly updated Progress Schedule, as required by the Specifications, with each monthly progress payment request. These deductions are cumulative, and will be made for each and every month that the Contractor fails to provide the required information. The monthly updated schedule and narrative shall be accurate, reflect actual events on the Project, and meet all requirements of the Specifications. If the Contractor does not correct the deficiency by providing an acceptable schedule within ten (10) Calendar Days of the City's receipt of the monthly progress payment request, the deduction may become permanent via a deductive Change Order. The City may withhold payments from the Contractor until a satisfactory baseline schedule, update, or revision has been submitted and reviewed.

7-5.01 Baseline (Contract) Schedule

Within 21 Calendar Days after receiving the Notice to Proceed, the Contractor shall submit a detailed proposed baseline schedule presenting an orderly and realistic plan for completion of

the Work, in conformance with the requirements of the Specifications. The proposed baseline schedule shall be in electronic format (*e.g.,* CD, DVD, or flash drive but not .pdf).

The proposed baseline schedule shall comply with the following requirements, unless modified by the City:

1. A time scaled CPM type schedule showing the mathematical analysis of the CPM network diagram and prepared in the version of software subject to City acceptance.

2. No activity on the schedule shall have a duration longer than fourteen (14) Working Days, with the exception of fabrication and procurement activities, unless otherwise approved by the City. Activity durations shall be the total number of actual days required to perform that activity including consideration of weather impact on completion of that activity.

3. Procurement of major equipment, through receipt and inspection at the job site, identified as a separate activity.

4. Owner furnished materials and equipment if any, identified as separate activities.

5. Dependencies (or relationships) between activities.

6. Processing/approval of submittals and shop drawings for major equipment. Activities that are dependent on submittal acceptance and/or material delivery shall not be scheduled to start earlier than the expected acceptance or delivery dates.

7. Separate buildings and other independent project elements shall be individually identified in the network.

8. Fourteen (14) Working Days for developing punch list(s), completion of punch list items, and final clean-up for the work or any designated portion thereof. No other activities shall be scheduled during this period.

9. Interface with the work of other contractors (or entities).

Each activity shown on the proposed baseline schedule shall have the following minimum information:

- Unique number(s) for each activity
- Activity description
- Activity relationships and dependencies (logic)
- Activity duration in Working Days

- Early start, early finish, late start, late finish dates (calendar date, i.e., day, month, year)
- Total float, free float
- Interim milestone dates and completion dates
- Detailed list of work contained within each activity
- Manpower loading for each item of work for unit price contracts
- Cost loading for each item of work for lump sum contracts

The City will review the proposed baseline schedule for conformance with the requirements of the Contract and, within seven (7) Calendar Days after receipt, will approve the proposed baseline schedule or will return it with comments. If the proposed baseline schedule is not approved, the Contractor shall revise the schedule to incorporate comments and resubmit the schedule for approval within seven (7) Calendar Days after receiving it. The approved schedule shall become the Contract Schedule.

The Contract Schedule shall be the basis for evaluating job progress, payment requests, and time extension requests. The responsibility for developing the Contract Schedule and monitoring actual progress as compared to the schedule rests with the Contractor.

Failure of the Contract Schedule to include any element of the work or any inaccuracy in the Contract Schedule will not relieve the Contractor from responsibility for accomplishing all the Work in accordance with the Contract.

Approval of the Contract Schedule will not relieve the Contractor of the responsibility for accomplishing the Work in accordance with the Contract and the Contract Time.

7-5.02 Progress Schedules

The Contractor shall submit to the City each month with its payment application an electronic and hard copy up to-date Progress Schedule with a narrative describing the general status of the Work and addressing any problem areas or delays, with impacts on critical path items of work highlighted. A corrective course of action shall also be included when problem areas or delays are encountered. The Progress Schedule shall be in the same software format and version as that used to create the Contract Schedule and shall include:

1. The Contractor's estimated percentage complete and remaining duration for each activity not yet complete.
2. Actual start/finish dates for activities as appropriate.
3. Identification of processing errors, if any on the previous update reports.
4. Revisions, if any, to the assumed activity durations including revisions for weather impact for any activities due to the effect of the previous update on the schedule.

5. Identification of activities that are affected by requested or proposed changes to the Work.

6. Resolution of conflict between actual work progress and schedule logic. When out of sequence activities develop in the Contract Schedule because of actual construction progress, the Contractor shall submit revisions to schedule logic to conform to current status and direction.

The City will review the updated schedule information and meet with the Contractor each month, unless the City requests more frequent meetings, to determine the status of the Work. If agreement cannot be reached on any issue, the Contractor will use the City's determination in the processing of the update.

Progress payments pursuant to the Contract will be based on the Progress Schedules.

7-5.03 Schedule Revisions

If the sequence of construction differs significantly, as determined by the City, from the Contract Schedule, the Contractor shall submit within fifteen (15) Calendar Days a revised schedule to the City for approval.

When a requested or proposed change to the Work will have an impact on the critical path, the Contractor shall submit a schedule fragnet showing this impact. If the requested or proposed change is accepted by the City, the schedule fragnet shall be incorporated into the Contract Schedule. Time extensions will be considered only to the extent there is insufficient remaining float to accommodate these changes, and pursuant to Sections 7-12, "Delays" and 7-18, "Extension of Time", of these General Provisions. No additional cost beyond that provided in Chapter 9, "Changes and Claims", of these General Provisions will be allowed for the incorporation of approved changes into the Contract Schedule.

Should the Contractor, after approval of the Contract Schedule, intend to change its plan of construction, it shall submit its requested revisions to the City, along with a written statement of the revision, including a description of the logic for rescheduling the work, methods of maintaining adherence to Intermediate milestones and other specific dates and the reasons for the revisions. If the requested changes are acceptable to the City, they will be incorporated into the Contract Schedule in the next reporting period.

Schedule revisions shall be submitted at least seven (7) Calendar Days prior to the date of submission of updated information. The City will have seven (7) Calendar Days to review the revisions.

7-5.04 Short Interval Schedules

The Contractor shall, if required by the City, prepare a Short Interval Schedule (SIS) to be used throughout the duration of Work. The SIS shall include all current activities and projected activities for the succeeding two (2) weeks. The SIS shall include actual start/finish dates for the preceding one (1) week. The SIS shall be submitted to the City prior to the each progress construction meeting. The Contractor shall participate in short interval scheduling coordination during the progress construction meetings.

7-5.05 Float

All float in any activity, milestone completion date, and/or Contract Completion Date is owned by the Project and, as such, is a resource available to both the City and the Contractor. Neither the City nor the Contractor owns the float time.

Unless otherwise provided herein, float is synonymous with total float and total float is the period of time measured by the number of Working or Calendar Days (as specified in the Contract) any non-critical path activity may be delayed before it and its succeeding activities become part of the critical path. If a non-critical path activity is delayed beyond its float period, then that activity becomes part of the critical path and controls the completion date of the Work. Thus, delay of a non-critical path activity beyond its float period will cause delay to the Project itself.

Acceptance of any schedule based on less time than the maximum time allowed for accomplishment of milestones or Project completion within Contract Time, does not serve to contractually change any Contract duration, nor does it serve as a waiver of either the Contractor's or the City's right to utilize the full amount of time specified in the Contract. As such, liability for delay of Project completion dates rests with the party actually causing delay to Project completion dates.

7-5.06 City's Right to Revise the Schedule

In the event of a delay to critical path work which is not the fault of the Contractor, the City may elect to re-sequence work or otherwise modify the Contract Schedule in an attempt to minimize the effect of the delay. It shall be the responsibility of the Contractor to cooperate in this effort. It is not the City's responsibility to ensure the Contractor the ability to use "optimal" crew size throughout the Project and no adjustment of the Total Contract Price will be made for minor variations in crew size or claimed loss of efficiency or disruption that result from schedule adjustments. However, overtime work or weekend work required by the City to meet schedule objectives other than those of the Contractor will be reimbursed per the provisions of Chapter 9, "Changes and Claims" of these General Provisions, provided that the Contractor has not contributed to the delay which the City is seeking to overcome. If the Contractor contends that a schedule adjustment will cause a significant disruption of its work sequence or ability to perform work efficiently, it shall notify the City within forty eight (48) hours of receipt of the adjustment. Failure to provide timely notice constitutes a waiver by the Contractor of any claim for compensation arising out of the schedule adjustment.

7-5.07 Responsibility for Completion

The Contractor shall furnish sufficient manpower, materials, facilities and equipment and shall work sufficient hours, including night shifts, overtime operations, Saturdays, Sundays and holidays (in accordance with Section 7-08) as may be necessary to insure the progression and completion of the Work in accordance with the Contract Time. If work on the critical path is behind the currently updated Progress Schedule and it becomes apparent that the Work will not be completed within the Contract Time, the Contractor will implement whatever steps it deems necessary to make up all lost time at no additional cost to the City. If the Contractor's solution is not successful, it will make further attempts using the following sequence of events:

1. Reschedule activities to achieve maximum practical concurrence of accomplishment of activities.

2. If the above cannot be achieved then;

    a. The Contractor shall increase manpower in such quantities and crafts as will substantially eliminate, in the judgment of the City, the backlog of work; or increase the number of working hours, shifts per working day, working days per week or the amount of equipment or any combination of the foregoing sufficiently to substantially eliminate in the judgment of the City the backlog of work.

    b. In addition, the City may require the Contractor to submit a recovery schedule demonstrating its program and proposed plan to make up a lag in scheduled progress and to ensure completion of the Work within the Contract Time. If the City finds the proposed recovery schedule unacceptable, it may require the Contractor to submit a new plan. If the actions taken by the Contractor or the second plan proposed are unsatisfactory, the City may require the Contractor to take any of the actions set forth in the previous paragraph without additional cost to the City to make up the lag in scheduled progress.

Failure of the Contractor to comply with the requirements of this Section 7-5.07 shall be considered grounds for a determination by the City that the Contractor is failing to undertake the Work with such diligence as will ensure its completion within the time specified and will subject the Contractor to all rights and remedies of the City under the Contract Documents.

7-6 UNUSUAL SITE CONDITIONS

The Contractor shall promptly upon discovery, and before the following conditions are disturbed, notify the City, in writing, of any:

1. Material that the Contractor believes may be hazardous waste, as defined in Section 25117 of the Health and Safety Code, that is required to be removed to a Class I, Class II, or Class III disposal site in accordance with provisions of existing law.

2. Subsurface or latent physical conditions at the site differing from those indicated in the Contract.

3. Unknown physical conditions at the site of any unusual nature, differing materially from those ordinarily encountered and generally recognized as inherent in work of the character provided for in the Contract.

The Contractor shall follow up the prompt notification with written documentation of the unusual site condition within five (5) Working Days. The City will have the site remediated or issue a Change Order per Chapter 9, “Changes and Claims”, of these General Provisions if it finds that the conditions do materially differ or involve hazardous waste.

7-7 PURSUANCE OF WORK DURING INCLEMENT WEATHER

During inclement or unsuitable weather or other unfavorable conditions, the Contractor shall pursue only such portions of the Work that will not be damaged by the weather or unfavorable conditions. When the weather or unfavorable conditions creates hazardous travel or working conditions, as determined by the City, the Contractor may be directed to stop that portion of the Work, in accordance with Section 5-22, “Temporary Suspension or Delay of Work”, of these General Provisions, until the weather clears or the conditions are no longer unfavorable. The Contractor must keep roads safe and inspect and maintain storm water pollution prevention and erosion control devices during inclement weather or unfavorable conditions. Lane and road closures may not be allowed if the City determines that the traffic controls will create unnecessary risk to the traveling public, the Contractor, and/or City employees.

7-8 PEAK HOURS, HOURS OF DARKNESS, HOLIDAYS, AND WEEKENDS

7-8.01 Allowable Times and Hours of Work

Unless otherwise noted in the Special Provisions or approved by the City, no work shall be done between the hours of 7 p.m. and 7 a.m., or on Saturdays, Sundays, or Legal Holidays.

Unless otherwise noted in the Special Provisions or approved by the City, no lane of traffic shall be closed to the public during the peak hours of 7:00 a.m. to 8:00 a.m. and 3:30 p.m. to 6:00 p.m., except as necessary for the proper care and protection of work already performed or in case of an emergency repair as defined below. These exceptions are allowed only with the City’s written permission.

7-8.02 Off-Period Work

A written request to work between 7 p.m. and 7 a.m. or on Saturdays, Sundays, or Legal Holidays, or to close a lane of traffic during peak hours must be submitted at least two (2) Working Days in advance of the intended work. The City will evaluate the Contractor’s request to determine if there is a benefit to the City, a nuisance or a hazard to the public, the Project, or the area surrounding the site, and if the Contractor should pay any City overtime costs related to the off-period work. The City may place conditions on any approval of off-period work based on this analysis.

7-8.03 Emergency Repairs

An emergency repair is a repair to the Work (including traffic controls, barricades, or temporary signs) required as a result of an unforeseen event that poses a danger to the public or jeopardizes the integrity of the Work, whether completed or not. The Contractor may be allowed to close a lane of traffic or work at night, on Saturdays, Sundays, or Legal Holidays for an emergency repair. The Contractor must notify the City within one (1) hour of dispatch of the Contractor’s repair crews, and give their names, an emergency contact number, the location of the emergency repair, and a tentative completion date and time. The Contractor shall notify the City when the emergency repair is completed and the road is clear. If an extension of time is required, the Contractor must provide a revised tentative Contract Completion Date. If an adjustment to the Total Contract Price is required, the Contractor shall notify the City of all proposed adjustments necessitated by the emergency and emergency repair.

7-8.04 Revocation of Permission For Off-Period Work

The City may revoke permission for off-period work if the Contractor endangers the public, an employee, or themselves by violating a safety and health regulation, or fails to maintain an adequate work force and equipment for reasonable prosecution and inspection of such work.

7-8.05 Working Shifts

Two- or three-shift operations may be established as a regular procedure by the Contractor upon written permission from the City. Such permission may be revoked if the Contractor fails to comply with applicable safety and health regulations, fails to provide for adequate inspection of the Work, or fails to provide sufficient means and equipment, including artificial light, to permit the Work to be carried out safely and appropriately and to permit proper inspection.

7-9 TEMPORARY FACILITIES AND SERVICES

Unless specified otherwise in the Special Provisions, the Contractor shall be responsible for providing and maintaining necessary material storage facilities, utilities, field offices, temporary roads, fences, security, etc. for prosecuting the Work. The Contractor shall obtain a City of Rocklin hydrant permit at contractor expense prior to connecting to or drawing construction water from fire hydrants.

7-10 PROTECTION OF WORK, PERSONS AND PROPERTY

The Contractor shall protect the Work, equipment and materials from damage until completion and acceptance of the Work. Neither the City nor any of its agents assume any responsibility for collecting funds from any person or persons that damages the Contractor's work.

The Contractor shall store materials and equipment in accordance with manufacturer's recommendations and erect such temporary structures as required to protect them from damage. The Contractor shall furnish guards, fences, warning signs, walks, and lights, and shall take all other necessary precautions to prevent damage or injury to persons or property.

7-11 PROOF OF COMPLIANCE WITH CONTRACT

When requested by the City, the Contractor shall submit properly authenticated proof of the Contractor's compliance with the Contract.

7-12 DELAYS

The Contractor shall provide notification to the City for any delays, in accordance with Section 7-13, "Notice of Delays", of these General Provisions.

7-12.01 Inexcusable Delays

The Contractor shall not receive any time extensions or additional monetary compensation for inexcusable delays. Inexcusable delays include, but are not limited to, the following:

1. Delays that affect only a portion of the Work but do not prevent or delay the prosecution of controlling items of work nor the completion of the whole Work

within the Contract Time.

2. Delays associated with the reasonable interference of other contractors employed by the City that do not necessarily prevent or delay the prosecution of controlling items of work or the completion of the whole Work within the Contract Time.

3. Delays associated with loss of time resulting from the necessity of submitting plans for City approval or from City surveys, measurements, inspections, and testing.

4. Delays that could have been avoided by the exercise of care, prudence, foresight, and diligence on the part of the Contractor or Subcontractors.

7-12.02 Excusable Delays

The Contractor may be granted an extension of Contract Time for excusable delays, which are those that are determined to be beyond the control of the Contractor, impact a controlling item of work, could not be prevented by the exercise of care, prudence, foresight, and diligence, and only to the extent there is insufficient remaining float to accommodate the delay. These excusable delays may include City acts, unusually severe weather or conditions resulting therefrom, Acts of God or of the public enemy, fire, epidemics, and labor strikes. Material shortages and delays in utility company relocations may be classified as excusable if the Contractor produces satisfactory evidence of acting in a timely manner.

The Contractor shall not receive any additional monetary compensation due to excusable delays unless the City determines that the excusable delay resulted from a City act or the discovery of cultural resources (as specified in Section 10-12, “Archeological and Cultural Resources”, of these General Provisions). The Contractor shall also not receive any additional monetary compensation due to excusable delays under the following circumstances:

1. The Contractor could have reasonably anticipated the delay and avoided the cost impacts of it.

2. When there are two (2) or more concurrent delays and at least one does not qualify for monetary compensation under Section 7-12.

3. The excusable delay does not affect controlling critical path tasks that would delay overall completion of the Work.

7-13 NOTICE OF DELAYS

The Contractor shall immediately notify the City in writing delivered by personal delivery, U.S. Mail First Class, or email, if the Contractor foresees any delay in the prosecution of the Work or if the Contractor learns of the occurrence of any excusable delay; but in no case shall the written notice be provided to the City later than five (5) Working Days after the occurrence of the event that is the cause of the excusable delay. The Contractor shall describe in this notice, the nature and cause of the delay and shall state the probability of the delay occurring (if foreseen ahead of time) so the City may take steps to prevent the occurrence or continuance of the delay and may determine whether the delay is inexcusable or excusable, its duration,

and its extent. Notification of delays in any other format than described herein, including, without limitation, in progress meetings and regardless of whether noted in the progress meeting minutes, is insufficient to constitute the required and proper notice.

In the event of a continuing delay, the Contractor is required to give only one notice.

The City will assume that all delays were inexcusable unless the City was notified as indicated above and through its investigation found them excusable. Contractor waives any and all claims for time extensions and/or monetary compensation based on delay if notice is not provided as described above. The Contractor acknowledges that City has a strong interest in mitigation of delay impacts and in confirmation of the existence of delay; therefore, the Contractor agrees to submit these notices of delay and to waive claims if notice is not submitted as required.

7-14 CARELESS DESTRUCTION OF STAKES AND MARKS NO CAUSE FOR DELAY

If the Contractor or Subcontractors destroy stakes and marks causing a delay in the Work, the Contractor shall have no claim for damages or time extensions. See also Section 5-9, “Surveys”, of these General Provisions.

7-15 TIME OF COMPLETION

Time is of the essence on all City contracts. The Contractor shall complete all of the Work called for under the Contract within the Contract Time.

7-16 EXTENSION OF TIME NOT A WAIVER

Time extensions granted for excusable delays or for the execution of extra or additional work shall not operate as a waiver of any of the City’s rights under the Contract.

7-17 INCLEMENT WEATHER AND CONTRACT TIME

The Contractor will be allowed a time extension if, in the opinion of the City, inclement or unsuitable weather or its effects prevents working on the current critical path task at the beginning of the shift for at least five (5) consecutive hours, or for at least (5) hours during the shift. (A current critical path task or controlling operation is any feature of the Work (e.g., an operation or activity including settlement, curing periods, and submittal activities) that if delayed or prolonged will delay the time of completion of the Contract.)

7-18 EXTENSION OF TIME

Subject to the provisions of Section 7-12.02, compliance with the required contractual notice provisions in Section 7-13, and subject to submission of a schedule fragnet in accordance with Section 7-5.03 of these General Provisions showing the impact on the critical path of the event giving rise to an excusable delay, the Contractor will be allowed a time extension to complete the Work equal to the sum of all excusable delays as determined in accordance with Section 7-12 to Section 7-17 of these General Provisions, plus any adjustments in Contract Time due to Change Orders as outlined in Section 9-12, “Time Extensions for Changes”, of these General Provisions. During such time extension, the Contractor will not be charged for extra engineering and inspection or liquidated damages.

7-19 SUBSTANTIAL COMPLETION

When the Contractor considers the entire Work, or a specific portion of the Work, substantially complete, the Contractor shall certify in writing to the City that the Work is substantially complete and request that the City grant substantial completion. Within five (5) Working Days, the City and the Contractor shall inspect the Work to determine the status of completion. If the City does not consider the Work ready for its intended use, the City will notify the Contractor in writing, giving the City's reasons. If the City considers the Work ready for its intended use, the City will grant substantial completion, and then the City will provide a list of items to be completed or corrected (often referred to as a "deficiency list" or "punch list") before Final Acceptance and Final Payment. Immediately upon being provided a deficiency list, the Contractor shall proceed to correct or complete the items on the list.

Substantial completion does not bar liquidated damages from being assessed and accruing. Liquidated and other damages may continue to accrue until Completion.

7-20 CLEANING UP

Throughout the construction period, the Contractor shall keep the site of the Work in a presentable condition, dispose of any surplus materials, keep roadways reasonably clear of dirt and debris, keep all sidewalk and other pedestrian areas clear of dirt, loose gravel, debris and any tripping hazards, clean out all drainage ditches and structures, and repair any fences or other property damaged during the progress of the Work, to the satisfaction of the City.

The Contractor shall also keep the work site cleaned of all rubbish, excess material, and equipment. All portions of the work shall be left in a neat and orderly condition prior to requesting final inspection. Surplus material shall be disposed of in accordance with Section 18-7, "Surplus Material Disposal", of the Placer County Specifications. The final inspection will not be made until final clean-up has been accomplished.

Construction and demolition debris may be properly disposed of by the contractor using self-haul equipment to deliver the debris to an approved disposal site. Any paid waste/recycling collection or disposal services shall exclusively utilize the City's designated refuse collection service provider.

7-21 FINAL INSPECTION AND FIELD ACCEPTANCE

The Contractor shall notify the City in writing when it believes that it has corrected all items on the deficiency (punch) list and has achieved Completion, and the City shall promptly inspect the Work. The Contractor or the Contractor's representative shall be present at the final inspection. The Contractor will be notified in writing of any further defects or deficiencies and the Contractor shall proceed within ten (10) Calendar Days to correct such defects or deficiencies. When again notified that the Contractor has achieved Completion, the City will again inspect the Work to ascertain that the corrections are in accordance with the Contract and Completion has occurred. The City may delay additional inspections if the City has reason to believe that the Contractor is not making a good faith effort to correct deficiencies. The Engineer will recommend acceptance of the Work to the Council or designee if it finds all the corrections acceptable and Completion has occurred; otherwise, the Engineer shall continue to withhold field acceptance of the work until all deficiencies on the deficiency (punch) list are corrected and Completion achieved.

7-22 FINAL ACCEPTANCE AND NOTICE OF COMPLETION

Upon Completion of the Work, including but not limited to acceptance of M&O manuals, Record Drawings, and test reports, the Engineer will recommend to the Council that it accept the Contract as complete. Upon acceptance by the Council, a Notice of Completion will be recorded with the County Recorder within fifteen (15) Calendar Days. Acceptance by the City Council shall cause the commencement of warranty periods. Acceptance shall not relieve the Contractor from the responsibility of completing or correcting any work, nor from the responsibility to correct any patent or latent defects in the Work.

7-23 WARRANTY WORK

Should any defects or deficiency in material, equipment or workmanship, such as faulty materials, poor workmanship, defective equipment, or any other reason that can be attributed to Contractor's performance, become apparent during any warranty period, the City shall notify Contractor in writing of the defect before expiration of the warranty period. If so notified, Contractor has a duty to immediately correct, or immediately and satisfactorily commit to correct, the defect or deficiency to meet the Contract requirements at Contractor's sole expense. This duty to correct does not expire for any reason, including but not limited to expiration of the warranty period. A new warranty period, equivalent to the original warranty period, will apply to all corrected deficiencies.

The City is hereby authorized to make such needed repairs if the Contractor fails to undertake, with due diligence, the needed repairs within ten (10) Calendar Days after the Contractor is given written notice of such failure and without notice to the surety; and the Contractor shall pay the entire costs for the City's work. However, in case of an emergency where, in the opinion of the City, delay would cause serious loss or damages or a serious hazard to the public, the City may immediately make repairs or take other action without prior notice to the Contractor or surety; and the Contractor shall pay the entire costs for the City's work.

CHAPTER 8 - MEASUREMENT AND PAYMENT

TABLE OF CONTENTS

Section **Page**

8-1 BASIS AND MEASUREMENT OF PAYMENT QUANTITIES 100
- 8-1.01 Unit Price Contracts 100
- 8-1.02 Lump Sum or Job Contracts 100
- 8-1.03 Payment for Mobilization 100
- 8-1.03.A Mobilization Not a Pay Item 100
- 8-1.03.B Mobilization a Pay Item 100

8-2 SCOPE OF PAYMENT 101
- 8-2.01 General 101
- 8-2.02 Unit Price Contract 101
- 8-2.03 Lump Sum or Job Contract 101
- 8-2.04 Final Pay Items 101
- 8-2.05 Allowances 101
- 8-2.06 Payment for Material Not Incorporated in the Work 102

8-3 WORK TO BE DONE WITHOUT DIRECT PAYMENT 102

8-4 PAYMENT FOR USE OF COMPLETED PORTIONS OF WORK 102

8-5 PROGRESS PAYMENT PROCEDURES 102

8-6 INSPECTION AND PROGRESS PAYMENTS NOT A WAIVER OF CONTRACT PROVISIONS 103

8-7 RETENTION 103
- 8-7.01 Retention to Ensure Performance 103
- 8-7.02 Non-Compliance 104
- 8-7.03 Substitution of Securities 104

8-9 DEDUCTIONS FOR IMPERFECT WORK 105

8-10 LIQUIDATED DAMAGES FOR DELAY 105

8-11 FINAL ESTIMATE AND PAYMENT 106

8-12 FINAL PAYMENT TO TERMINATE LIABILITY OF CITY 107

8-13 DISPUTED PAYMENTS 108

CHAPTER 8 MEASUREMENT AND PAYMENT

8-1 BASIS AND MEASUREMENT OF PAYMENT QUANTITIES

It is the Contractor's responsibility to measure and/or compute the quantities of work completed, subject to verification by the City, under the terms of the Contract. In computing quantities, the length, area, solid contents, number, weight, or time as specified in the Contract or the Schedule of Values shall be used.

8-1.01 Unit Price Contracts

Payment for all work bid at a price per unit of measurement will be based upon the actual quantities of work as measured upon completion. The Estimated Quantities provided in the Bid Documents are for comparative bidding only. The City does not express or imply that the actual amount of work or materials will correspond to the Estimated Quantities. The Contractor shall make no claim nor receive any compensation for anticipated profits, loss of profit, damages, or any extra payment due to any difference between the amount of work actually completed, or materials or equipment furnished, and the Estimated Quantities. See also Section 9-14, "Contract Change Order", of these General Provisions.

8-1.02 Lump Sum or Job Contracts

Progress Payments will be based on the Schedule of Values prepared by the Contractor and approved by the City prior to acceptance of the first Progress Payment request (see Section 8-5, "Progress Payment Procedures", below). If requested by the City, the Contractor shall furnish full copies of subcontracts showing actual costs. The Schedule of Values shall be consistent with the baseline progress schedule prepared by the Contractor pursuant to Section 7-5.02, "Progress Schedules", of these General Provisions.

8-1.03 Payment for Mobilization

Mobilization shall consist of preparatory work and operations, including, but not limited to, those necessary for the movement of personnel, equipment, supplies, and incidentals to the site; for the establishment of all offices, buildings, and other facilities necessary for the Work; and for all other work and operations which must be performed, or costs incurred, prior to beginning the Work.

Payment for mobilization will be as follows:

8-1.03.A Mobilization Not a Pay Item

When the Contract does not include a separate pay item for mobilization, full compensation for mobilization will be included in the Contract lump sum price or in the prices paid for the various items of work in a unit price contract, and no additional compensation will be paid.

8-1.03.B Mobilization a Pay Item

When the Contract or accepted Schedule of Values includes a separate item for mobilization, payment for mobilization will include full compensation for the furnishing of all labor, materials, tools, equipment, administrative costs, and incidentals for mobilization.

The City will pay no greater than five percent (5%) of the Total Contract Price as a separate pay item for mobilization. In the event the Contractor submits a mobilization pay item greater than five percent (5%) of the Total Contract Price, the City will pay any excess mobilization amount with the final progress payment.

Absent City approval, the City will not pay additional mobilization compensation for work under a Change Order.

Payment for mobilization shall be subject to retention per Section 8-7, "Retention", of these General Provisions.

8-2 SCOPE OF PAYMENT

8-2.01 General

Compensation under the terms of the Contract shall be full payment for the Work, including loss or damage arising from the nature of the Work, action of the elements, or unforeseen difficulties encountered during the prosecution of the Work and until its final acceptance; and all risks connected with the prosecution of the Work.

8-2.02 Unit Price Contract

Progress payments will be made based upon the unit price bid and measured quantities for work completed, plus work completed on approved Change Orders. For compensation for alterations in quantities of work, including deviations greater than twenty-five percent (25%), see Section 9-8.02, “Payment for Changes – Unit Prices”, in these General Provisions.

8-2.03 Lump Sum or Job Contract

Progress payments will be based upon the approved Schedule of Values for work completed, plus work completed on approved Change Orders.

8-2.04 Final Pay Items

An item designated as a Final Pay Item in the Contract shall be paid for as specified in Section 9-1.02C, “Final Pay Item Quantities”, of the State Specifications.

8-2.05 Allowances

Allowances may be included in the Bid Form for materials and/or work that may be added during the course of the Contract. The Allowance may be used in whole, in part, or not at all as determined by the City. Whenever costs of the Work included in the Allowance item are more or less than the specified Allowance amount, the Total Contract Price will be adjusted accordingly by Contract Change Order. The Contractor shall make no claim nor receive any compensation for anticipated profits, loss of profit, damages, or any extra payment due to any difference between the amount of work actually completed, or materials or equipment furnished, and the Estimated Quantities for the Allowance.

8-2.06 Payment for Material Not Incorporated in the Work

No Progress payments will be made for materials and equipment not incorporated in the Work, unless specifically set forth in the Special Provisions or authorized by the City.

8-3 WORK TO BE DONE WITHOUT DIRECT PAYMENT

Compensation for any portion of the Work not specifically identified in the Bid Form or Schedule of Values is understood to be included in the price for other items, unless specified in the Special Provisions as extra work. No additional compensation is allowed for additional shifts or premium pay necessary to ensure that the Work is completed within the time limits specified in the Contract.

8-4 PAYMENT FOR USE OF COMPLETED PORTIONS OF WORK

If the City occupies or uses a portion of the Project under Section 4-10, above, before it accepts Completion of the Work, the Contractor will only be compensated in accordance with this Chapter 8. No final payment shall occur for a limited portion of the work.

8-5 PROGRESS PAYMENT PROCEDURES

No progress payment will be made when, in the judgment of the City, the Work is not proceeding in accordance with the provisions of the Contract or when the total work done since the last progress payment amounts to less than one thousand dollars ($1,000). Unless otherwise agreed to at the preconstruction meeting or identified in the Special Provisions, the Contractor shall submit in writing monthly for City review an estimate of the total amount and value of work done, including that done under approved Change Orders, and the acceptable materials furnished and incorporated in the work completed through the last day of the previous pay period. The Bid Form or Schedule of Values shall be used to prepare a progress payment request for the items, or portions of items, of the Work completed during the monthly progress period.

Unless specified otherwise in the Special Provisions, any progress payment request must be accompanied by (1) an updated Progress Schedule that complies with the Contract; (2) record drawing update confirmations; (3) a conditional lien release in the form prescribed by law warranting that title to all work, labor, materials and equipment covered by the request is free and clear of all liens, claims, security interests or encumbrances; and (4) unconditional lien releases for all work through the prior progress payment lien releases. If Contractor fails to submit these documents with the progress payment request, then City, in its sole discretion, may withhold part of the progress payment or reject the progress payment request with an explanation in writing of the reason. Contractor may resubmit the progress payment request with the required documents. City has no obligation to process the progress payment request or make a progress payment if Contractor fails to provide these required documents.

If the required documents are submitted with the progress payment request, then the City shall review any progress payment request submitted by Contractor to determine its accuracy and validity. Any payment request determined not to be a proper payment request suitable for payment shall be returned to the contractor as soon as practicable, but not later than seven days, after receipt, along with a document stating the reasons why the payment

request is not proper. Once the City has an undisputed and properly submitted payment request from Contractor, the progress payment shall be made within 30 days of its submission.

Once the City agrees with Contractor as to the amount of Work completed as of the date of the progress payment request, the City shall deduct the following from the estimated total value of that amount of Work: All previous payments, the retention previously withheld pursuant to Section 8-7, “Retention”, of these General Provisions, and other withholdings as permitted by the Contract. The City will then approve the balance for payment to the Contractor, with retention being withheld from that approved payment as described in Section 8-7 of these General Provisions.

The payment of a progress payment or the acceptance thereof by the Contractor does not constitute acceptance by the City of any portion of the Work, and does not reduce the Contractor’s liability to replace unsatisfactory work, material, or equipment for any or the Work, whether or not completed. Approval by the City of a progress payment request that contains an inadvertence or error by the Contractor will not release the Contractor or the Contractor's surety from damages arising from the work covered by the approved payment request or from enforcement of every provision of the Contract. The City also has the right to correct any error made in any Progress Payment and may withhold as much payment as necessary to correct the error in later progress payments.

8-6 INSPECTION AND PROGRESS PAYMENTS NOT A WAIVER OF CONTRACT PROVISIONS

No inspection, order, measurement, approval, modification, payment, acceptance of work or material (including, but not limited to, acceptance of the entire Work), time extension, or possession of the Work or any part thereof shall be a waiver of any of the terms and conditions of the Contract, the powers reserved by the City, or any right of the City to damages or to reject the Work in whole or part. No breach of this Contract shall be construed a waiver of any other or subsequent breach. All remedies provided in the Contract shall be cumulative and shall be in addition to all other rights and remedies that may exist at law or in equity.

8-7 RETENTION

8-7.01 Retention to Ensure Performance

The City will retain five percent (5%) of each approved progress payment to ensure performance under the Contract. The parties acknowledge that some of the purposes of retention under this Contract are to encourage the Contractor to reach Completion quickly, to ensure that Contractor completes the Work in its entirety, and to provide funds from which the City may withhold for disputes, costs and claims under Section 8-8, “Withholdings/Denial of Progress Payment Request”, of these General Provisions.

Retention will be held by the City until at least thirty-five (35) Calendar Days, but no more than sixty (60) Calendar Days after recording of the Notice of Completion. However, the City may continue to withhold some or all of the retention beyond 60 days to the extent that any disputed amounts or Stop Payment Notices or liquidated damages exist, in which case the City may withhold 150% of the disputed amount and 125% or more of outstanding Stop

Payment Notices and full amount of liquidated damages.

8-7.02 Non-Compliance

In addition to the five percent (5%) payment retention discussed above, the City may also retain portions or all of a progress or final payment for Contractor's noncompliance with the Contract in an amount deemed appropriate by the City.

8-7.03 Substitution of Securities

At the request and expense of the Contractor, in accordance with Public Contract Code Section 22300, in lieu of the City withholding the five percent (5%) retention defined in Section 8-7.01 of these General Provisions, the Contractor may: (1) substitute a deposit of securities at least equivalent to the retention to be paid, or (2) request that the City pay the withheld retention directly to an escrow agent. If the Contractor elects either option, the Contractor and City shall enter an escrow agreement in the exact form set forth in Public Contract Code Section 22300.

8-8 WITHHOLDINGS/DENIAL OF PROGRESS PAYMENT REQUEST

The City may deny a progress payment request and/or withhold amounts from a progress payment and/or withhold a release of retention for any of the following reasons:

- Stop payment notices filed pursuant to Civil Code Sections 9350 et seq., including but not limited to a reasonable amount to provide for the City's reasonable cost (including but not limited to attorneys' fees and experts' fees) of litigation based on the stop notice;
- Fines levied against Contractor or the Work by the City or other entities;
- Third party claims against Contractor or the City arising from the acts or omissions of Contractor or its subcontractors;
- Defective Work not remedied;
- Previous overpayments to Contractor;
- Failure by the Contractor to make payments properly to employees or Subcontractors for labor, materials, or equipment;
- Any portion of the Work retained in accordance with Section 5-19 of these General Provisions;
- The Work may not be completed for the unpaid balance of the Contract sum;
- The Work may not be completed within the Contract Time and the City will incur actual and/or liquidated damages;
- Review of excessive resubmittals, and excessive inspections or tests;

- Replacement of survey stakes and excessive survey work;
- Failure by the Contractor to maintain and update Record Drawings;
- Damage to the City or another contractor;
- Failure by the Contractor to perform the Work in accordance with the Contract;
- Failure by Contractor to submit the necessary documents with a progress payment request;
- Cost of insurance purchased by City due to cancellation or reduction of coverage of Contractor's insurance;
- Failure by Contractor to make proper submissions under the Contract;
- Any violation or non-compliance with Contractor's legal responsibilities (see Chapter 6, "Legal Relations and Responsibilities" of these General Provisions), including withholds for wages adjustments in accordance with the California Labor Code and any fines incurred by the City as a result of the Contractor's actions; and/or
- Any amounts otherwise necessary to protect the City's interests and/or compensate the City for past, present and future damages.

In addition to withholding a reasonable amount based on the above grounds, the City may withhold an additional 50% of that reasonable amount from a progress payment or release of retention; except that it may withhold an additional 25% or more of the Stop Payment Notice amount to provide for its reasonable cost (including but not limited to attorneys' fees and experts' fees) of any litigation based on a Stop Notice.

If, on Completion or termination of the Contract or termination of the Contractor's control over the Work, sums withheld from the Contractor are insufficient to cover the City's charges against the Contractor, the City has the right to recover the balance from the Contractor or the Contractor's surety.

8-9 DEDUCTIONS FOR IMPERFECT WORK

For any portion of the Work, materials or equipment retained in accordance with Section 5-20 of these General Provisions, the City will deduct from a Progress Payment a reasonable amount to represent the decreased or lost value to the City.

8-10 LIQUIDATED DAMAGES FOR DELAY

If the Work is not completed by the Contractor in the time specified in the Contract Documents, or within any period of extension authorized pursuant to this Chapter of these General Provisions, the Contractor acknowledges and admits that the City will suffer damage, and that it is impracticable and infeasible to fix the amount of actual damages.

Therefore, it is agreed by and between the Contractor and the City that the Contractor shall pay to the City as fixed and liquidated damages, and not as a penalty, the sum specified in the Contract Documents for each Calendar Day of delay until the Date of Completion, and that both the Contractor and the Contractor's surety shall be liable for the total amount thereof, and that the City may deduct Liquidated Damages from any monies due or that may become due to the Contractor. If it appears during the course of construction that the Contractor is behind schedule and the imposition of liquidated damages is likely, or if liquidated damages begin to accrue prior to the time for final payment, the City may, at its discretion, withhold the amount accrued from any progress payment that would otherwise be due. This right to withhold funds is in addition to the City's other rights under the Contract Documents.

This liquidated damages provision shall apply to all delays of any nature whatsoever, save and except only delays found to be excusable or time extensions granted by the City.

Pursuant to Government Code Section 4215, the Contractor shall not pay fixed and liquidated damages for delay in completing the Project caused by the failure of the City or the owner of utility facilities located on the Project site to provide for removal or relocation of such facilities.

Payment by the City of any progress payments after liquidated damages have accrued shall not constitute a waiver by the City of its right to claim liquidated damages.

If the Contract is terminated for cause, then the Contractor shall be liable to the City for liquidated damages for all periods of time from the scheduled Contract Completion Date at the time of such termination, as that date may be adjusted by any extensions of time to which the Contractor is entitled, until the Date of Completion.

8-11 FINAL ESTIMATE AND PAYMENT

Subsequent to field acceptance as detailed in Section 7-21 of these General Provisions, and within thirty (30) Calendar Days after field acceptance the Contractor shall provide a proposed final payment request, segregated as to Contract item and Change Order work. Contractor shall submit all previously unsubmitted documents required by the Contract with the request; otherwise the City has the right to reject the request and require submission of these documents.

The City will review the properly submitted proposed final payment request and, after withholding for all issues as permitted by Section 8-8 of these General Provisions and making other corrections as necessary, shall return its approved Final Payment request as modified, within fifteen (15) Calendar Days of receipt. All progress payments shall be subject to correction in the final payment. If the Contractor fails to file a final payment request within the time allotted, the City may create and approve one based on the best information available to it.

Within fifteen (15) Calendar Days after the approved final payment request is submitted to the Contractor, the Contractor shall submit back to the City a written approval of said request or a written statement of exceptions to be considered a "closeout" claim. The Contractor's statement of exceptions shall be in sufficient detail for the City to ascertain the basis and amount of the exceptions, and will include supporting documentation as detailed in Section

9-18.03 of these General Provisions. Failure to provide sufficient detail shall be cause for denial of the exceptions.

Any claim of the Contractor or Subcontractors or suppliers with respect to the performance or breach of the Contract or any alterations thereof (except for payment of the balance of the Contract price as set forth in the final payment request) not specifically set forth in the statement of exceptions, is waived by the Contractor. If the Contractor fails to file a statement of exceptions within the time allowed, Contractor waives its right to submit a statement of exceptions and the approved final payment request will be deemed to as accepted and approved by the Contractor.

The City shall process the final payment and a release of retention in accordance with the approved final payment request. The payment of undisputed sums due for the final payment, and excluding any sums withheld for Stop Payment Notices, shall be made within thirty-five (35) days of the Contractor's acceptance of the approved final payment request or within sixty (60) days after the recording of the Notice of Completion, whichever is later. The release of retention shall be made in accordance with Section 8-7 of these General Provisions. If the Contractor submits a timely statement of exceptions, then the City shall process these payments as a semifinal action; otherwise the payment shall be considered final.

The City shall respond in accordance with the provisions of Section 9-18 with its final decision regarding the claims and exceptions set forth by Contractor. Should the City's final decision grant some or all of Contractor's claims or exceptions, then to the extent necessary a supplemental final payment and/or supplemental final release of retention shall be processed within thirty (30) days.

Any claim or exception set forth by Contractor for which Contractor did not follow the required claim procedures in the Contract Documents shall be disallowed; by failing to follow the required claim procedures prior to Contractor's written statement of claims and exceptions, Contractor will have waived all rights to compensation (whether money or time) related to such claim or exception. If not already expired, the running of time for presenting a Government Code claim (see Government Code sections 900 et seq.) shall be tolled from the time of the Contractor's timely statement of exceptions until the City's final decision on the statement of exceptions.

8-12 FINAL PAYMENT TO TERMINATE LIABILITY OF CITY

If Contractor fails to timely submit a statement of exceptions, the Contractor's acceptance of the final payment and final release of retention shall release the City and the City's officers, officials, agents, employees, members, volunteers, affiliates, and their duly authorized representatives from all claims or liability on account of all Work performed or any alterations thereof. If Contractor timely submits a statement of exceptions, the Contractor's acceptance of the semifinal payment and semifinal release of retention shall release the City and the City's officers, officials, agents, employees, members, volunteers, affiliates, and their duly authorized representatives from all claims or liability on account of Work performed or any alterations thereof, except unresolved items set forth in the statement of exceptions.

8-13 DISPUTED PAYMENTS

The City will decide disputes regarding payments under the Contract according to the procedures set forth in Chapter 9, “Changes and Claims”, of these General Provisions. The decision of the City will be final.

CHAPTER 9 - CHANGES AND CLAIMS

TABLE OF CONTENTS

Section **Page**

9-1 AUTHORITY FOR CHANGES....110
9-2 ORDERING OF CHANGES....110
9-3 CONSTRUCTION INCENTIVE CHANGE PROPOSAL (CICP)....110
9-3.01 General....110
9-3.02 Description....111
9-3.03 Submittal....111
9-3.04 Acceptance....112
9-3.05 Sharing Provisions and Formula....112
9-4 DELETED....113
9-5 PROSECUTION OF CHANGES TO THE CONTRACT....113
9-6 COST AND PRICING DATA....114
9-7 ACCESS TO RECORDS....114
9-8 PAYMENT FOR CHANGES....114
9-8.01 Lump Sum Price....114
9-8.02 Unit Prices....114
9-8.03 Force Account....115
9-8.03.A Labor....115
9-8.03.A.(1) Actual Wages....115
9-8.03.A.(3) Subsistence and Travel....115
9-8.03.B Materials....116
9-8.03.C Equipment....116
9-8.03.D Subcontracts....116
9-9 MARKUPS FOR CHANGED WORK....116
9-10 COMPENSABLE EXCUSABLE DELAYS....117
9-10.01 Construction Equipment....117
9-10.02 Jobsite Indirect Costs....117
9-10.03 Markup for Compensable Excusable Delays....118
9-10.04 Duplicated Overhead Costs....118
9-11 LIMITATIONS ON PAYMENTS FOR CHANGED WORK....118
9-12 TIME EXTENSIONS FOR CHANGES....118
9-13 EFFECT ON SURETIES OF CHANGES TO THE WORK....118
9-14 CONTRACT CHANGE ORDER....119
9-15 ACCEPTANCE OF ORDERS FOR CHANGES....119
9-16 DISPUTE REGARDING CONTRACT REQUIREMENTS....119
9-17 NOTICE OF POTENTIAL CLAIM....119
9-18 SUBMISSION OF CLAIMS....120
9-18.01 Definitions....120
9-18.02 Claims Procedure.....121
9-18.03 Documentation of Claims by Contractor....124
9-19 ENGINEER'S DECISION....125
9-20 ALTERNATIVE DISPUTE RESOLUTION....126
9-21 NO ALTERNATIVE CLAIMS PROCEDURE....126
9-22 ASSIGNMENT OF CLAIMS....126

CHAPTER 9 CHANGES AND CLAIMS

9-1 AUTHORITY FOR CHANGES

The City reserves the broad right to order or direct corrections, alterations, additions, modifications, deletions or other changes as required for the proper completion of the Work. The order or directive may be issued prior to the final acceptance of the Contract without voiding the Contract, without notice to the Contractor's sureties, and in accordance with the provisions of Section 9-2, "Ordering of Changes", of these General Provisions.

The Contractor shall not perform corrections, alterations, additions, modifications, deletions, or other changes to the Work without a written directive or order from the City, in accordance with Section 9-2 of these General Provisions. Payment for changed or extra work will not be made without the City's written authorization.

9-2 ORDERING OF CHANGES

The City may order or direct, including, without limitation, through a Field Directive, a change, in writing, during the course of the Work, and the Contractor shall immediately comply with the order or directive. Changes to the Work shall in no way affect, vitiate, or make void the Contract or any part thereof, except that which is necessarily affected by such changes and is clearly the evident intention of the parties to the Contract.

Changes to the Work may be initiated as described in Section 4-5, "Field Directives or Other Written Directives", of these General Provisions. If the City and Contractor agree that compensation in the form of an adjustment to the Total Contract Price and/or the Contract Time is required, then the adjustment will be formalized in a Change Order, in accordance with Section 9-14, "Contract Change Order", of these General Provisions. Failure of the City and Contractor to agree to terms of a Change Order based on an order or directive shall not relieve the Contractor of his obligation to complete all work specified in the order or directive.

9-3 CONSTRUCTION INCENTIVE CHANGE PROPOSAL (CICP)

9-3.01 General

The Construction Incentive Change Proposal (CICP) Program provides a program for the Contractor to use its expertise to improve Contract performance to create an overall reduction in the Total Contract Price. Proposing to delete work is not a CICP. Deleted work is addressed in Section 4-8, "Deleted Items," in these General Provisions. The CICP Program shall not apply to City contracts of less than one hundred thousand dollars ($100,000). The Contractor and Subcontractors may participate in the CICP Program. Participation of Subcontractors shall be through the Contractor, and the Contractor and Subcontractors must agree upon the sharing arrangement; written evidence of such agreement must be submitted with the CICP.

The Contractor shall proceed with the Work as scheduled until the Contractor receives the City's written approval of a CICP. The City shall be the sole judge of the acceptability of a CICP and of the net capital cost reduction from the adoption of all or any part of the CICP

9-3.02 Description

A CICP is a formally written proposal for a Contract Change Order. A CICP must be initiated, developed, and identified as such by the Contractor or Subcontractor through the Contractor as identified in Section 9-3.01. A CICP must result in a net capital cost reduction while causing no increase in the total life cycle cost of the Project and shall comply with the following conditions:

- Required function, reliability, and safety of the Project will be maintained without detracting from the life expectancy or increasing maintenance requirements.

- The proposed change shall not cause undue interruption of the Work, nor shall it extend the Contract Time.

- The proposed change shall comply with all applicable permits, regulations, and code requirements, and any other requirements as set forth in the Contract. The proposed change shall not involve payment of royalties by the City to the Contractor.

9-3.03 Submittal

The Contractor shall submit a brief description of the proposed CICP prior to preparing the detailed submittal as outlined below.

A CICP submittal must contain pertinent information in supporting documents for City evaluation. As a minimum, the following information shall be submitted:

1. Name of individuals associated with the development and preparation of the CICP.

2. A detailed description and duly signed plans and specifications showing work as presently designed and the proposed changes.

3. A clear identification of all advantages and disadvantages for each proposed change.

4. A detailed procedure and schedule for implementing the proposed change. This detailed procedure and schedule shall include all necessary Contract amendments. Also indicated must be the latest date that the CICP can be approved for implementation.

5. A summary of estimated costs, including the following:

    a. Project construction costs before and after the CICP. This shall be a detailed estimate identifying the following items for each trade involved in the CICP:

        - Quantities of material and equipment.

- Unit prices of materials and equipment.
- Labor hours and rates for installation.
- Subcontractor and prime Contractor mark ups.
- Operation and maintenance costs before and after the CICP.
- Cost for implementing the CICP not included elsewhere.

b. Contractor's share of the savings based on the sharing provision in Section 9- 3.05, "Sharing Provisions and Formula," in this Section of these Specifications.

c. Other data as required by local permits and regulations and code requirements as set forth in the Contract.

6. Time required for execution of the proposed change.

To the extent indicated herein, the Contractor may restrict the City's use of any CICP or the supporting data submitted pursuant to the CICP program. Suggested wording for inclusion in CICPs is as follows:

"This data furnished pursuant to the construction incentive clause of the Contract shall not be disclosed or duplicated in whole or in part beyond what is necessary to accomplish the review. This restriction does not limit the City's right to use the information if it is available from any source without limitations. The City has the right to duplicate, use and disclose any information if the CICP is accepted."

The City may modify, accept, or reject the CICP. However, if the CICP is modified or not acted upon within the time allotted in the proposal, or if it is withdrawn or rejected, the City will not be liable for the Contractor's cost of developing the CICP.

9-3.04 Acceptance

The City will use the processing procedure specified for Change Orders in Section 9-14, "Contract Change Order," in these General Provisions, if a CICP is accepted. The City's written approval of the CICP is required. If the CICP is rejected, the Contractor shall not appeal the decision.

9-3.05 Sharing Provisions and Formula

Upon acceptance of the CICP, the Contractor will receive 50 percent (50%) of the Net Capital Savings based upon the following formula:

Net Capital Savings = Contract Cost Prior to CICP - (Revised Contract Cost After CICP + CICP Development Cost + CICP Implementation Cost)

The Contractor's development cost is limited to that directly associated with the preparation of the CICP package. Development costs will be reimbursed after approval. However, the City will reject costs that cannot be satisfactorily substantiated.

The CICP implementation costs include, when appropriate, the City's engineering costs for reviewing and redesigning the changes. However, City costs for processing the CICP are excluded.

9-4 DELETED

9-5 PROSECUTION OF CHANGES TO THE CONTRACT

If directed by the City, within fourteen (14) Calendar Days of issuance of a Request for Proposal, the Contractor shall provide a Proposed Change Order with a cost and/or time proposal prepared in accordance with the requirements of this Section, and Sections 9-8 and 9-12 of these General Provisions. The Contractor's Proposed Change Order shall indicate the amount to be added or deducted from the Total Contract Price, supported by complete details of all Contractor, Subcontractor, vendor or supplier costs per Section 9-6, "Cost and Pricing Data", of these General Provisions.

If the Contractor does not submit a Proposed Change Order within fourteen (14) Calendar Days, and unless the City is otherwise notified within fourteen (14) Calendar Days of a potential cost impact, the Contractor agrees to perform the work described in the change request with no additional compensation.

If the change causes a change in the monetary compensation or contract time the Project Manager will issue a Change Order in accordance with Section 9-14, "Contract Change Order" of these General Provisions. If a Field Directive or other written order is issued on a force account basis, the Contractor must immediately begin keeping records in accordance with Section 9-8.03, "Force Account", of these General Provisions. When the City and Contractor cannot agree on the credit for work deleted by a written order, the City's estimate will be deducted from the Total Contract Price, unless the Contractor presents proof prior to the final payment that the City's estimate is in error.

If agreement for a change in the Work is reached regarding payment, but not a time adjustment, the City shall have the right to direct the Contractor to proceed with the change at the agreed price. The impact of the changed work on the project schedule will be considered by the City in accordance with Section 9-12, "Time Extension for Changes", of these General Provisions.

Failure of the parties to reach agreement regarding the costs and time of the performing the change in the Work and/or any pending protest shall not relieve the Contractor from performing the change in the Work promptly and expeditiously. The Project Manager may unilaterally direct the Contractor in writing to perform changes in or additions to the scope of the Contract. The Contractor shall perform such work and shall be compensated pursuant to the provisions of Section 9-8, "Payment for Changes", of these General Provisions.

9-6 COST AND PRICING DATA

Cost and pricing data submitted by the Contractor shall be true, complete, accurate, and current. The City may require a formal certification to verify Contractor-submitted cost and pricing data. Additional requirements for cost and pricing data may also be included in the Special Provisions. The City shall have access to the records supporting such cost and pricing data in accordance with the Section 9-7, “Access to Records”, of these General Provisions.

9-7 ACCESS TO RECORDS

Upon reasonable notice and during normal business hours, the City shall have access to the Contractor’s and Subcontractors’ records for the purpose of verifying, auditing, and evaluating the accuracy of cost and pricing data submitted by the Contractor. “Records” as used in this Section shall include, but not be limited to: original estimates, subcontract agreements, purchase orders, books, documents, accounting records, papers, project correspondence, project files, and scheduling information necessary to determine the direct and indirect costs, job site, area and home office overhead, delay and impact costs. Records shall include the original Bid and all documents related to the Bid and its preparation, the as-planned construction schedule and all related documents. Such access shall include the right to examine and audit such records and make excerpts, transcriptions, and photocopies at the City’s cost.

9-8 PAYMENT FOR CHANGES

The method of payment agreed upon by the Contractor and the City, or selected by the City at its sole discretion in the absence of any other agreement, shall be set forth in the Request for Proposal or in the written order directing the change.

The three methods of payment are as follows:

9-8.01 Lump Sum Price

The Contractor shall submit a lump sum price proposal. The proposal shall include an estimate of labor, material, equipment, Subcontractor, material supplier costs, and any surcharges and/or markups as allowed in Section 9-9, “Markups for Changed Work” in these General Provisions.

In the event that the parties are unable to agree as to the reasonable costs and time to perform the change in or addition to the Work based upon the Contractor's proposal and the Project Manager and City do not elect to have the change in the Work performed on a time and material basis, the Project Manager and City shall make a unilateral determination of the reasonable cost and time to perform the change in the Work, based upon their own estimates, the Contractor's submission or combination thereof.

9-8.02 Unit Prices

If payment for Contract work is based on unit prices, payment for changed work will be made based on actual quantities of work done at the unit prices contained in the Contract or unit prices otherwise agreed upon by the City and Contractor if none are contained in the

Contract. Payment for changed work based on Contract or agreed upon unit prices includes the full cost of the item of work including profit and overhead; and no additional payment or adjustment will be allowed. If the final quantity of any item of work required under the Contract varies from the Engineer's Estimate by twenty-five percent (25%) or more, compensation will be adjusted in accordance with Section 9-1.06, "Changed Quantity Payment Adjustments", of the State Specifications.

9-8.03 Force Account

In the absence of either an agreed lump sum price or unit prices for the change, the City may direct the Contractor to proceed with the changed work on a force account basis. The Contractor shall keep and present, in a form acceptable to the City, a complete and correct accounting of all costs associated with the change, including all pay records, vouchers, invoices, etc. The Contractor will be paid for labor, materials, and equipment actually used during the performance of the changed work as specified in this Section of these General Provisions in Sections 9-8.03.A, "Labor", 9-8.03.B, "Materials", and 9-8.03.C, "Equipment"; plus the percentages stipulated in Section 9-9, "Markups for Changed Work".

To facilitate agreement on direct craft labor hours, construction equipment hours, and material quantities, the Contractor shall notify the City not less than four (4) hours prior to starting force account work. The Contractor shall submit Daily Work Reports (DWR's) for signature not later than 9:00 a.m. the day following performance of any force account work. DWR's shall list names of all Contractor's staff, the staff person's craft or trade, all craft or trade labor hours, and all material and construction equipment used. The Contractor shall use the DWRs in preparing billings for force account work.

9-8.03.A Labor

The Contractor will be paid the cost of direct labor (foreperson and below) used in the actual and direct performance of the changed work including working foreman when authorized by the City. Except as otherwise provided, the Contractor will receive no additional compensation for overtime work without prior written authorization from the City. The cost of labor will be the sum of the following:

9-8.03.A.(1) Actual Wages

Charges for labor will be the Contractor's actual payroll costs for labor of any classification, including employer payments to or on behalf of the workers for health and welfare, pension, vacation, and similar purposes.

9-8.03.A.(2) Labor Surcharge

A twenty-six percent (26%) surcharge for taxes, insurance, and all other payments made to or on the behalf of the employee shall be added to the actual wages.

9-8.03.A.(3) Subsistence and Travel

The City will pay the Contractor for actual subsistence and travel allowance costs associated with the changed work required by labor agreements or acceptable to the City. Documentation must be provided to the City.

9-8.03.B Materials

Payment will be for the purchaser's actual cost of supplier or vendor furnished materials. If the Contractor does not furnish satisfactory evidence of the cost of such materials, the cost will be the lowest current wholesale price at which such quantities of materials are available and delivered to the job site. The City reserves the right to purchase materials for the changed work; the Contractor shall have no claims for costs or profit on such materials.

9-8.03.C Equipment

The prices paid for equipment directly and solely required for performance of the changed work will be those listed in the current edition of the Caltrans publication, "Labor Surcharge and Equipment Rental Rates". If the equipment is not shown in this publication, the Contractor shall be paid such hourly rental rates as are agreed upon by the Contractor and the City prior to use of the equipment, plus thirty-three and one-third percent (33-1/3%) for the cost of fuel, oil, lubrication, and field repairs and maintenance. In no case shall the hourly rental rates exceed those of established distributors or equipment rental agencies serving the area.

The rate paid for the use of equipment constitutes full compensation to the Contractor for all costs, including fuel, power, oil, lubrication, supplies, small tools, small equipment, necessary attachments, repairs and maintenance of any kind, depreciation, storage, insurance, labor (except for equipment operators) and any and all costs to the Contractor incidental to the use of such equipment for the changed work.

Payment will not be made for the equipment while it is inoperative due to breakdowns or for time in which no changed work was performed. Payment for rentals will include time required to move equipment to the changed work from the nearest available rental source and to return it to the source. However, no moving, loading, or transportation costs will be paid if the equipment is used for any other portion of the Work.

Individual tools and pieces of equipment having replacement value of five hundred dollars ($500) or less shall be considered tools or small equipment and no payment will be made for those pieces of equipment.

9-8.03.D Subcontracts

Subcontract costs shall be the actual cost to the Contractor for work performed by a Subcontractor. The provisions of this Section 9-8.03, "Force Account", apply to the computation of subcontract costs. Subcontractors shall compute markups per the Section 9-9, "Markups for Changed Work", of these General Provisions.

9-9 MARKUPS FOR CHANGED WORK

Only the direct costs directly attributable to the performance of the changed work shall be allowed. All other costs shall be included in the allowed markups, including, but not limited to, profit, home office and field overhead, jobsite indirect costs, extended overhead, jobsite office personnel, general field superintendence, general engineering, supervision of labor, bond and insurance premiums, and general field expense, and shall constitute full

compensation for all costs not included as actual labor, materials, equipment, or Subcontractor costs. Markups for changed work shall not exceed the following:

Labor	25%
Materials	15%
Equipment Rental	15%
Bonds and Insurance	2%

The Contractor or Subcontractor, whomever actually performs the changed work, may add the markups to the total of allowable costs. When a Subcontractor performs work, the Contractor and any higher tiered Subcontractor may add as mark-up to the total of allowable costs an amount not to exceed five percent (5%), subject to the limitations of this Section.

When the City is entitled to credit for deleted work, a ten percent (10%) credit for deleted overhead of the Contractor or Subcontractor, as applicable, will be added to such credit.

9-10 COMPENSABLE EXCUSABLE DELAYS

Payments will be made as follows for compensable excusable delays, as defined in Section 7-12.02, “Excusable Delays”, of these General Provisions. Contractor waives any and all monetary compensation for excusable delays other than the items listed below.

9-10.01 Construction Equipment

Compensation will be paid for construction equipment idle as a result of a compensable excusable delay to the extent costs are incurred. The prices paid for equipment will be those in the current edition of the Caltrans publication, “Labor Surcharge and Equipment Rental Rates”, with the following modifications:

- The right-of-way delay factor for each classification of equipment will be applied to the rental rate.

- Compensation will be provided for the actual time of the delay, but not more than eight (8) hours per day.

Compensation will be provided for each day or portion of a day, excluding Saturdays, Sundays and holidays, for the duration of the delay, unless the approved current schedule identifies critical path work for these days.

9-10.02 Jobsite Indirect Costs

Indirect costs shall be limited to the following:

1. Actual payroll costs for field office staff incurred as a result of the delay, including management, supervision, safety, estimating, engineering, drafting, clerical, secretarial and accounting. A twenty-six percent (26%) surcharge for taxes, insurance, and all other payments made to or on the behalf of the employee may be added to the payroll costs.

2. Actual cost for third-party services provided for the field office, such as

management, supervision, safety, estimating, engineering, drafting, clerical, secretarial, and accounting utilized in lieu of employees.

3. Applicable field office expenses for rent and utilities that are substantiated by invoices. Compensation for on-site plant, incidentals, and facilities for non-field office personnel including branch office and home office personnel will not be provided. Compensation for these items and other incidentals is included in the Section 9-10.03, “Markup for Compensable Excusable Delays”, of these General Provisions.

9-10.03 Markup for Compensable Excusable Delays

Except for compensable excusable delays associated with archeological and cultural resources as described in Section 10-12, “Archeological and Cultural Resources”, of these General Provisions and right-of-way delays, fifteen percent (15%) shall be added to job-site indirect costs for onsite plant, incidentals, overhead, home and branch office costs, bonds and profit. The Contractor shall determine the distribution of the markup among the Contractor, Subcontractors, and suppliers.

9-10.04 Duplicated Overhead Costs

If the Contractor is compensated for delays in accordance with this Chapter, and the delay is attributable to direct cost changes to which markups were added, equitable adjustments shall be made to eliminate the duplication of compensation for indirect and overhead costs and profit.

9-11 LIMITATIONS ON PAYMENTS FOR CHANGED WORK

The City will not pay the Contractor for costs in excess of prevailing market values, unless the Contractor can establish, to the satisfaction of the City, that the Contractor has investigated all possible means of providing the work and that the excess costs could not be avoided. The City will be the sole judge of the necessity of incurring costs in excess of market value and whether the excess costs are directly required for performance of changed work. The City’s determination will be final.

9-12 TIME EXTENSIONS FOR CHANGES

The Contractor is entitled to adjustment in Contract Time only if completion of the entire Work or of any milestone outlined in the Special Provisions is extended due to changes impacting the controlling item of work. Each proposal submitted by the Contractor in accordance with Section 9-5, “Prosecution of Changes to the Contract”, of these General Provisions, shall state the amount of extra time the Contractor believes the change added to the overall project schedule. Failure to request a time extension within the time allowed constitutes a waiver of the Contractor’s right to subsequently claim an adjustment in Contract Time.

9-13 EFFECT ON SURETIES OF CHANGES TO THE WORK

No alterations, time extensions, extra or additional work or other changes authorized by these conditions or any part of the Contract shall affect the sureties’ obligations under the

Contract.

9-14 CONTRACT CHANGE ORDER

The City will issue a Change Order if a change to the Total Contract Price or Contract Time is necessary. The Contractor shall not be entitled to any adjustments in either Total Contract Price or Contract Time for changes performed before receipt of a written directive requiring the changes or Change Order approved by the City. Adjustments in Contract Time or Total Contract Price for changes performed will not be made until a Change Order is approved by the City. A Change Order is generally comprised of one or more Field Directives or other written orders or directives, and contains a summary of each change and changes to the Total Contract Price and Contract Time.

9-15 ACCEPTANCE OF ORDERS FOR CHANGES

A Change Order that is substantially in agreement with the Contractor's Proposed Change Order, and/or the Contractor's written agreement of a Change Order, Field Directive or other written directive, will constitute the Contractor's final and binding agreement to the provisions of the Change Order, Field Directive, or other written directive, and a waiver of all claims in connection therewith, whether direct or consequential in nature, including those of any Subcontractors or suppliers. If the Contractor disagrees with any Change Order, Field Directive, or other written directive, the Contractor may submit a notice of potential claim to the City in accordance with Section 9-17, "Notice of Potential Claim", of these General Provisions. Disagreement with the provisions of a Change Order, Field Directive, or other written order will not relieve the Contractor of the Contractor's obligations under the Contract.

9-16 DISPUTE REGARDING CONTRACT REQUIREMENTS

If the Contractor and City fail to agree whether or not any work or other matter is within the scope of the Contract, the Contractor shall nevertheless immediately perform such work upon receipt of a written Field Directive or other written order. If Contractor disagrees with a decision by the City that any work is within the scope of the Contract, then the Contractor must follow the claims procedures in the Contract, including but not limited to Sections 7-13, 8-11, 9-17 and 9-18 of these General Provisions.

The Contractor shall not stop performing the Work pending resolution of a dispute, unless so ordered in writing by the City.

9-17 NOTICE OF POTENTIAL CLAIM

The Contractor shall not be entitled to payment of any additional compensation (whether money or time) for any cause, including any disagreement, protest, or change, any act or failure to act by the City, or the happening of any event, thing or occurrence, unless the Contractor has given the City due advance written notice of potential claim as hereinafter specified. The written Notice of Potential Claim shall set forth the reasons for which the Contractor believes additional monetary compensation and/or time will or may be due, the nature of the costs and/or time involved, and, insofar as possible, the amount of the potential claim.

The Contractor shall promptly provide a written Notice of Potential Claim to the City upon discovery of concealed or unknown conditions or upon any disagreement, protest, situation, event, or occurrence that may result in a claim, including but not limited to changes in work and delays. The Notice shall be submitted no more than five (5) Working Days after the discovery or occurrence of any event that may be the basis for a claim for additional compensation or additional time.

Failure to timely submit the Notice waives any Claim that Contractor may otherwise have had the right to submit based on the underlying occurrence or event.

9-18 SUBMISSION OF CLAIMS

Claims shall be subject to the requirements of Public Contract Code sections 20104 *et seq.* and 9204. A summary of those provisions is set forth below. A waiver of the rights granted by the referenced statutes is void and contrary to public policy, provided, however, that (1) upon receipt of a Claim, the parties may mutually agree to waive, in writing, mediation and proceed directly to the commencement of a civil action or binding arbitration, as applicable; and (2) the City may prescribe reasonable change order, claim, and dispute resolution procedures and requirements in addition to the statutory requirements, so long as the contractual provisions do not conflict with or otherwise impair the statutory timeframes and procedures. To the extent that the summary below is inconsistent with any requirement of those statutes, the statutes shall control. The terms below are intended to be consistent with the governing statutes, and any modifications shall be understood as lawful modifications or additions to the statutory requirements if at all possible.

9-18.01 Definitions

"Claim" means a separate demand by the Contractor sent by registered mail or certified mail with return receipt requested, for one or more of the following:

(A) a time extension, including, without limitation, for relief from damages or penalties for delay assessed by a public entity under a contract for a public works project.

(B) payment by the public entity of money or damages arising from work done by, or on behalf of, Contractor pursuant to the contract for a public works project and payment for which is not otherwise expressly provided or to which the claimant is not otherwise entitled.

(C) payment of an amount that is disputed by the City.

"Mediation" means any nonbinding process, including, but not limited to, neutral evaluation or a dispute review board, in which an independent third party or board assists the parties in dispute resolution through negotiation or by issuance of an evaluation.

"Public works contract" or "public works project" means the erection, construction, alteration, repair, or improvement of any public structure, building, road, or other public improvement of any kind.

"Subcontractor" means any type of contractor within the meaning of Chapter 9 (commencing with Section 7000) of Division 3 of the Business and Professions Code who either is in direct contract with the Contractor or is a lower tier subcontractor.

9-18.02 Claims Procedure.
All Claims under this Contract shall be resolved using the following procedure.

9-18.02.01 The Claim shall be in writing and include the documents necessary to substantiate the Claim as set forth in Section 9-18.03. Unless a different time is stated in the Contract Documents, Claims must be filed not later than thirty (30) Calendar Days after the proposed final payment request is returned to the Contractor by the City. Any Claim shall be certified under penalty of perjury and in compliance with the California False Claims Act, as set forth in Section 9-18.03 below. Failure to include these required certifications will constitute grounds for immediate rejection of the Claim and shall be deemed a waiver and absolute bar of the Claim, including any right to pursue the Claim further.

9-18.02.02 If a Subcontractor, including a lower tier Subcontractor, lacks legal standing to assert a Claim against the City because privity of contract does not exist, then the Contractor may present a Claim on behalf of such a Subcontractor. A first-tier Subcontractor may request in writing, either on its own behalf or on behalf of a lower tier Subcontractor, that the Contractor present a Claim on behalf of the Subcontractor for work that was performed by the Subcontractor. The Subcontractor requesting that the Claim be presented shall furnish reasonable documentation to support the Claim. Within 45 days of receipt of this written request, the Contractor shall notify the Subcontractor in writing as to whether the Contractor presented the Claim and, if the Contractor did not present the Claim, provide the Subcontractor with a statement of the reasons for not having done so.

9-18.02.03 Upon receipt of a Claim, the City shall conduct a reasonable review of the Claim. Within 30 days of receipt of the Claim, the City may request, in writing, any additional documentation supporting the Claim or relating to defenses to the Claim that the City may have against the claimant. Where additional information is requested by the City, the time in which the City must respond to a Claim shall be tolled until all requested information is provided. If additional information is thereafter required, then it shall be requested and provided upon mutual agreement of the City and the Contractor.

9-18.02.04 Within 45 days of receipt of the Claim, as that time may be tolled as provided in Section 9-18.02.03 above, the City shall provide the Contractor with a written statement identifying what portion of the Claim is disputed and what portion is undisputed. Upon receipt of a Claim, the City and the Contractor may, by mutual agreement, extend the time period for a response. Failure by the City to respond to a Claim within the time periods described herein shall result in the Claim

being deemed rejected in its entirety. A Claim that is denied by failure of the City to respond shall not constitute an adverse finding with regard to the merits of the Claim or the responsibility or qualifications of the claimant.

9-18.02.05 Any payment due on an undisputed portion of the Claim shall be processed and made within 60 days after the City issues its written statement. The City shall not fail to pay money as to any portion of a Claim which is undisputed except as otherwise provided in the Contract Documents.

9-18.02.06 If the claimant disputes the City's written response, or the City fails to respond within the time prescribed, the Contractor may so notify the City, in writing, either within 15 days of receipt of the City's response or within 15 days of the City's failure to respond within the time prescribed, respectively, and demand an informal conference to meet and confer for settlement of the issues in dispute. Upon receipt of a demand, sent by registered mail or certified mail, return receipt requested, the City shall schedule a meet and confer conference within 30 days for settlement of the dispute.

9-18.02.07 Within 10 business days following the conclusion of the meet and confer conference, if the Claim or any portion of the Claim remains in dispute, then the City shall provide the Contractor a written statement identifying the portion of the Claim that remains in dispute and the portion that is undisputed. Failure by the City to provide the written statement within the time periods described herein shall result in the remaining Claim issues being deemed rejected in their entirety. Denial by failure of the City to respond shall not constitute an adverse finding with regard to the merits of the remaining Claim issues or the responsibility or qualifications of the claimant. Any payment due on an undisputed portion of the Claim shall be processed and made within 60 days after the District issues its written statement.

9-18.02.08 Any remaining disputed portion of the Claim following the meet and confer conference shall be submitted to nonbinding mediation, with the City and the Contractor sharing the associated costs equally. The City and the Contractor shall mutually agree to a mediator within 10 business days after the disputed portion of the Claim has been identified in writing. If the parties cannot agree upon a mediator, each party shall select a mediator and those mediators shall select a qualified neutral third party to mediate with regard to the disputed portion of the Claim. Each party shall bear the fees and costs charged by its respective mediator in connection with the selection of the neutral mediator. Unless otherwise agreed to by the City and the Contractor in writing, the mediation conducted pursuant to this Section shall excuse any further obligation under Public Contract Code Section 20104.4 to mediate after litigation has been commenced. This Section does not preclude arbitration if mediation under this Section does not resolve the parties' dispute.

9-18.02.09 If mediation is unsuccessful, then the Contractor may file a claim as provided in Chapter 1 (commencing with Section 900) and Chapter 2 (commencing with Section 910) of Part 3 of Division 3.6 of Title 1 of the Government Code with respect to the parts of the Claim remaining in dispute. For purposes of those provisions, the running of the period of time within which a Claim must be filed shall be tolled from the time the Contractor submits his or her written Claim pursuant to Section 9-18.02.01 until the time that mediation of disputed portions of that Claim is completed. This Section does not apply to tort claims, and nothing in this Section is intended nor shall be construed to change the time periods for filing tort claims or actions specified by Chapter 1 (commencing with Section 900) and Chapter 2 (commencing with Section 910) of Part 3 of Division 3.6 of Title 1 of the Government Code.

9-18.02.10 Amounts not paid in a timely manner as required by this Section shall bear interest at seven percent (7%) per year.

9-18.02.11 Claims of $375,000 or less are subject to the following procedures for civil actions filed to resolve the claims:

(a) The case shall be submitted to judicial arbitration pursuant to Chapter 2.5 (commencing with Section 1141.10) of Title 3 of Part 3 of the Code of Civil Procedure, notwithstanding Section 1141.11 of that code. The Civil Discovery Act (Title 4 (commencing with Section 2016.010) of Part 4 of the Code of Civil Procedure) shall apply to any such proceeding, consistent with the rules pertaining to judicial arbitration.

(b) The parties stipulate that the arbitrator shall be experienced in construction law and shall be paid necessary and reasonable hourly rates of pay not to exceed their customary rate, and such fees and expenses shall be paid equally by the parties, except in the case of arbitration where the arbitrator, for good cause, determines a different division. In no event shall these fees or expenses be paid by state or county funds.

(c) In addition to Chapter 2.5 (commencing with Section 1141.10) of Title 3 of Part 3 of the Code of Civil Procedure, any party who, after receiving an arbitration award, requests a trial *de novo* but does not obtain a more favorable judgment shall, in addition to payment of costs and fees under that chapter, pay the attorneys' fees of the other party arising out of trial *de novo.*

(d) The court may, upon request by any party, order any witnesses to participate in arbitration process.

In any suit filed under Public Contract Code Section 20104.4, the City shall pay interest at the legal rate on any arbitration award or judgment. The interest shall begin to accrue on the date the suit is filed in a court of law.

9-18.03 Documentation of Claims by Contractor

For each Claim, the Contractor shall furnish claim documentation as herein specified.

Contractor shall submit three (3) certified copies of all claim documentation. All claim documentation shall be complete when submitted. The evaluation of the Contractor's claim will be based on City's records and the claim documentation submitted by Contractor. Claim documentation shall conform to generally accepted auditing standards and shall be in the following format:

1. Introduction and background
2. Issues
    a. Index of issues
    b. For each issue:
        - Background
        - Chronology
        - Contractor's position (reason for City's potential liability)
        - Supporting documentation of merit
        - Supporting documentation of damages
3. CPM schedules, as-planned versus as-built, and delay analysis
4. Productivity and damages exhibits
5. Summary of issues and damages

Supporting documentation of merit for each issue shall be cited by reference, photocopies, or explained. Supporting documentation may include, but not be limited to, General Provisions, Technical and other Specifications, Drawings, correspondence, conference notes, shop drawing logs, survey books, inspection reports, delivery schedules, test reports, daily reports, subcontracts, fragmentary CPM schedules, photographs, technical reports, RFIs, Field Directives, and other related records.

Supporting documentation of damages for each issue shall be cited, photocopied, or explained. Supporting documentation may include, but not be limited to, certified detailed labor, materials, equipment, and construction equipment and services costs; purchase orders; invoices; project as-planned and as-built costs; Subcontractor payment releases;

quantity reports; other related records; general ledger and any other accounting materials.

Each submission of Claim documentation shall include the following certification, signed in the same manner as the Contract was signed:

Claim Declaration

I, [name of declarant], declare the following:

[Contractor company name] has contracted with the City of Rocklin for the [name of project] project. I am authorized by my employer ([contractor company name]) to prepare the attached claim for compensation (in other words, for money and/or time extensions) to the City of Rocklin regarding this project (dated _____, 20_, and requesting $_____ and/or ___ additional working days), and I did prepare said attached claim. I am the most knowledgeable person at [contractor company name] regarding this claim.

I am aware of all law that relates to this claim, including but not limited to California Penal Code section 72, Government Code sections 12650 et seq. (False Claims Act), and Business and Professions Code sections 17200 et seq. (Unfair Business Practices Act). I am aware that submission or certification of false claims, or other claims that violate law or the contract, may lead to fines, imprisonment, and/or other severe legal consequences for myself and/or [contractor company name].

The attached claim is prepared and submitted in good faith, does not breach the contract between [contractor company name] and the City of Rocklin for this project, does not violate any law, satisfies all provisions of the contract, only contains truthful and accurate supporting data, and only requests an amount that accurately reflects the adjustments to money and time for which I honestly and in good faith believe that the City of Rocklin is responsible under its contract with [contractor company name].

So that I could declare that the statements in this declaration and the attached claim were true and correct, while preparing this declaration and claim I consulted with others (for example, attorneys, consultants, or others who work for [contractor company name]) when necessary to assure myself that said statements were true and correct.

I declare under the penalty of perjury under the laws of the State of California that the foregoing is true and correct. Executed _____, 20__, at _____, California.

_____
[name of declarant]

If the Contractor is unable to support any part of a claim and it is determined that such inability is attributable to falsity of such certification or misrepresentation of fact or fraud by the Contractor**,** the Contractor shall be liable to the City for three (3) times the amount of damages which the City sustains, plus the cost of civil action, and may be liable to the City for a civil penalty of up to ten thousand dollars ($10,000) for each false claim.

9-19 ENGINEER'S DECISION

The Engineer will review the facts of any disputed Claim and may request additional information, evidence, or testimony in accordance with Section 9-18. The Engineer will render a fair, impartial decision based on the Contract, and the evidence submitted by the City and Contractor representatives.

9-20 ALTERNATIVE DISPUTE RESOLUTION

After all remedies and provisions of the Contract are exhausted, any dispute related to the Work or Contract may be resolved by mediation or arbitration if agreed upon by the parties involved and the City and the Contractor amend the Contract to agree on a form of alternative dispute resolution.

9-21 NO ALTERNATIVE CLAIMS PROCEDURE

Nothing in the Contract constitutes an agreement for an alternative claim procedure under the provisions of Government Code Section 930.2, nor relieves the Contractor of the requirements of Government Code, Part 3, Chapters 1 and 2 and Title 1, Division 3.6, Chapters 1, 2, 3, and 4, or Public Contract Code Section 20104.2(e).

9-22 ASSIGNMENT OF CLAIMS

The Contractor shall not assign any portion of the moneys due the Contractor without written City approval. No person other than the party signing the Contract has any claim under the Contract, except as provided in the Contract.

CHAPTER 10 - ENVIRONMENTAL CONTROLS AT WORK SITE

TABLE OF CONTENTS

Section **Page**

10-1 DUST CONTROL 128
10-1.01 General 128
10-1.02 Dust Palliative 128
10-1.03 Measurement and Payment 128
10-2 AIR POLLUTION CONTROL 128
10-3 BURNING 128
10-4 EROSION, SEDIMENT, AND WATER POLLUTION CONTROL 128
10-4.01 General 128
10-4.02 City Requirements 129
10-4.03 Regulations, Ordinances, Permits, and Specifications 129
10-4.04 Storm Water Pollution Prevention Plan 130
10-4.05 Erosion and Sediment Control Plan 130
10-4.06 Minimum City Requirements – Best Management Practices for Construction Activities. 130
10-4.07 Compliance 131
10-4.08 Payment 131
10-5 CONTROL OF WATER IN THE WORK 132
10-6 NOISE CONTROL 132
10-7 CONTAMINATED AND HAZARDOUS MATERIALS OR ENVIRONMENTS 132
10-7.01 Contaminated or Hazardous Materials 132
10-7.02 Hazardous Environments 132
10-8 USE OF EXPLOSIVES 132
10-9 SANITARY REGULATIONS 133
10-10 CONFINED SPACES 133
10-10.01 Contractor Responsibilities and Qualifications 133
10-10.02 City Responsibilities for Permit Confined Spaces 133
10-10.03 Existing Sewers and Storm Drains 133
10-10.04 Joint City – Contractor Entries 134
10-11 CLEANING UP 134
10-12 ARCHEOLOGICAL AND CULTURAL RESOURCES 134
10-13 PROTECTION OF EXISTING TREES 134

CHAPTER 10 ENVIRONMENTAL CONTROLS AT WORK SITE

10-1 DUST CONTROL

10-1.01 General

Dust control is a year-round requirement. Dust control shall consist of applying water and/or soil binder/dust palliative to alleviate or prevent fugitive and nuisance dust resulting from the Contractor's operations, either within or outside the Work right-of-way. Dust control shall be performed by the Contractor at any time dust, resulting from the Contractor's operations, becomes a fugitive or a nuisance or visual impediment, or as directed by the City. Failure to adequately control dust will be cause for the City to direct the Contractor to suspend operations or for the City to perform such activity with all costs to be borne by the Contractor. The application of water for dust control may be performed by the Contractor for the Contractor's convenience.

10-1.02 Dust Palliative

Dust palliative shall be applied when deemed necessary by the City. Dust palliative may be used for dust control on disturbed soil areas, haul roads and staging areas. Dust palliatives are to be submitted to the City for approval prior to use and applied per manufacturer's recommendation. Costs for dust palliatives will be born solely by Contractor.

10-1.03 Measurement and Payment

Full compensation for applying water and/or dust palliatives for dust control is included in the prices paid for the various items of work involved and no additional compensation will be paid.

10-2 AIR POLLUTION CONTROL

The Contractor shall comply with all Federal, State, City, regional air district (Placer County Air Pollution Control District), and local air pollution control rules, regulations, ordinances, and statutes that apply to the Work. The Contractor shall also comply with the requirements of any permits issued to the City as noted in the Special Provisions.

10-3 BURNING

Unless otherwise provided in the Special Provisions or approved by the City in writing, material shall not be burned on site.

10-4 EROSION, SEDIMENT, AND WATER POLLUTION CONTROL

10-4.01 General

The Federal Clean Water Act requires construction sites to prevent pollutants entering storm drain systems. Storm drain systems include both constructed and natural facilities, including streams, waterways, and other bodies of water. The Contractor shall protect the local storm drain system from pollution, and shall conduct and schedule operations to avoid erosion and sediments. Where erosion may cause water pollution due to the nature of the material or the season, the Contractor's operations shall be scheduled so temporary or permanent erosion

control features are installed concurrently with, or immediately following, grading operations.

The Contractor is responsible for organizing and scheduling the Work to prevent, control, and/or abate water pollution. In order to provide effective and continuous control of water pollution, it may be necessary for the Contractor to perform the Work in small or multiple units, on an out-of-phase schedule, and/or with modified construction procedures. The Contractor shall coordinate water pollution control work with all other Contract work.

10-4.02 City Requirements

Unless specified otherwise in the Contract, all construction projects in the City of Rocklin must have a water pollution control program as follows:

- Construction projects disturbing more than the threshold number of acres as defined in the State General Construction Permit [currently one (1) acre] must have a Storm Water Pollution Prevention Plan (SWPPP). (See Section 10-4.04 below.)
- Construction involving the grading, filling, excavating, storage, or disposal of fifty (50) cubic yards or more of soil, or the clearing or grubbing of one (1) acre or more must have an Erosion and Sediment Control Plan (ESCP). (See Section 10-4.05 below.)
- All other construction must comply with the City of Rocklin Municipal Code. (See Section 10-4.06 below.)

Before starting the Work, the Contractor shall develop a program for the control of water pollution during the Work. The program shall indicate how the Contractor proposes to effectively control water pollution and provide drainage during the Work. The program shall also describe how the Contractor plans to monitor the effectiveness of the program. The program shall show erosion control work and all water pollution control measures the Contractor plans to implement in connection with the Work. The Contractor shall not perform any clearing, grubbing or earthwork on the project, other than that specifically authorized in writing by the City, without a water pollution control program. When requested by the City, the Contractor shall submit the program for review.

The City is not liable to the Contractor for any portion of the water pollution control program or subsequent revisions nor for any delays to the Work due to the Contractor's failure to prepare and implement a program nor for any delays as a result of City review.

10-4.03 Regulations, Ordinances, Permits, and Specifications

The Contractor is responsible for compliance with all Federal, State, City and local permits, rules, regulations, ordinances, statutes, and City directions that apply to erosion, sediment, and water pollution control. The Contractor, at a minimum, shall comply with the most stringent regulation, ordinance, permit, or specification of the following applicable to the Work:

- This Chapter or the Special Provisions
- Chapter 8.30 of Title 15 of the City Municipal Code
- Chapter 15.28 of Title 15 of the City Municipal Code
- State of California Construction Activities Storm Water General Permit
- Specific or general National Pollution Discharge Elimination System (NPDES) or other permits that cover the Work or are specific to the area of the Work
- The City of Rocklin Joint Municipal NPDES Permit

The Contractor's responsibility to provide water pollution control under this Chapter ends at Field Acceptance of the Work. (See Section 7-21 above.)

10-4.04 Storm Water Pollution Prevention Plan

For construction projects disturbing more than one (1) acre, the Contractor must obtain coverage under the State Water Resources Control Board (SWRCB) General Storm Water Permit to Discharge Storm Water Associated with Construction Activity (General Permit). General Permit coverage is obtained by certifying and filing a Notice of Intent (NOI) with the Regional Board. The Contractor will prepare and the City will file the NOI unless specified otherwise in the Special Provisions.

Additionally, unless specified otherwise in the Special Provisions, the Contractor shall prepare a SWPPP in accordance with the General Permit or other permit specified in the Special Provisions. The SWPPP shall be prepared by an individual qualified and certified about storm water pollution prevention methods and requirements, and shall be signed by the preparer of the SWPPP. The SWPPP shall be implemented by the Contractor before Work commences. The Contractor may not be allowed to mobilize until the plan is accepted. The SWPPP shall be kept onsite at all times, updated for the various phases of the project, and made immediately available for City and Regional Board Inspectors upon request. Updates shall be submitted to the City immediately for review. At a minimum, the SWPPP shall include all elements as specified in the State's order.

10-4.05 Erosion and Sediment Control Plan

Construction projects involving the grading, filling, excavating, storage, or disposal of fifty (50) cubic yards or more of soil, or the clearing or grubbing of one (1) acre or more, are required to comply with the provisions of Chapters 15.28 of Title 15 of the City Municipal Code.

The Erosion and Sediment Control Plan (ESCP) shall be prepared by a qualified and certified practitioner. When requested by the City, the ESCP shall be reviewed by the City before work commences. Unless otherwise approved by the City, the Contractor will not be allowed to mobilize until the plan is prepared. If the Contractor's methods fail to prevent erosion or siltation, the Contractor shall revise and adjust the control measures to provide effective control, and shall be responsible for any damage, fine, and/or administrative civil liabilities resulting from erosion or siltation originating on the Work site and any other site the Contractor controls or passes through.

10-4.06 Minimum City Requirements – Best Management Practices for Construction Activities.

All construction contractors performing work in the City shall conform to adopted City standards. In addition to any adopted BMPS or other requirements for construction projects adopted by the City, the following requirements shall apply to all projects undergoing construction in the City. The requirements set forth below shall apply.

1. Sediment, construction waste and other pollutants from construction sites and parking areas, including runoff from equipment at construction sites, shall be retained on the site to the maximum extent practicable.

2. Any sediment or other materials that are not retained on the site shall be removed the same day as the projects are completed. Where determined as necessary by the director, a temporary sediment barrier shall be installed.

3. Plastic covering may be utilized to prevent erosion of an otherwise unprotected area, along with runoff devices to intercept and safely convey the runoff.

4. Excavated soil or stockpiled base materials shall be located on the site in a manner that minimizes the amount of sediments running into the street or adjoining properties. Soil and materials piles shall be covered until the soil is either used or removed. Soil and materials shall not be placed on paved streets or sidewalks without specific permission of the City.

5. No washing of construction or other industrial vehicles shall be allowed on a construction site or property adjacent to a construction site.

6. Drainage controls shall be utilized as needed, depending on the extent of the proposed grading and topography of the site, including but not limited to the following: detention ponds, sediment ponds, infiltration pits, dikes, filter berms, ditches, down drains, chutes, or flumes.

Notification to the Project Manager shall be required within twenty-four (24) hours following the failure of authorized measures to prevent erosion or sediment from leaving the construction site, the deposit of debris or material on adjoining property or public rights-of-ways, or the interference with any existing watercourses or drainage facilities.

10-4.07 Compliance

Compliance with the provisions in this Chapter does not relieve the Contractor of the responsibility for compliance with other Contract provisions.

The Contractor shall perform routine inspection and maintenance of BMP's. Inspections shall be done prior to, during, and after each rain event. The Contractor is solely responsible for preparing and maintaining inspection and monitoring records; and for including those records in the SWPPP or, in the case of Erosion and Sediment Control Plans, the site or project Maintenance Log, copies of which shall be available to the City for review upon request.

The Contractor shall immediately correct or replace any ineffective BMP. If the measures taken by the Contractor are inadequate to effectively control water pollution, the City may direct the Contractor to revise the operations and water pollution control program. The City may restrict work from being performed until the water pollution control measures are adequate and, if required, a revised water pollution control program is in place. Continued noncompliance may result in the City suspending the Work in accordance with Section 5-21, above. The City reserves the right to take corrective action and withhold City costs for corrective action from progress payments or final payment in accordance with Section 8-8, above.

Any fines, including third-party claims, levied against the City as a result of Contractor's non-compliance are the Contractor's sole responsibility and will be withheld from progress payments or final payment in accordance with Section 8-8, of the General Provisions.

10-4.08 Payment

Except as otherwise provided in the Special Provisions, full compensation for compliance with all applicable erosion and sediment control and storm water pollution and prevention requirements will be included in the prices paid for the various Contract items of work and no

additional compensation will be allowed.

10-5 CONTROL OF WATER IN THE WORK

When groundwater or surface run-off water is encountered, the Contractor shall furnish, install, maintain, and operate all necessary machinery, appliances, and equipment to keep excavations and wet areas reasonably free from water. De-watering operations shall remain in effect until the Work has been completed, inspected, and approved, and all danger of flotation and other damage is eliminated. Water pumped from waterways, trenches, excavations, or low spots shall be disposed as specified in the Special Provisions or as directed by the City.

The Contractor is not allowed to dispose of any water that contains sediment or other contaminants. The Contractor is responsible for providing filtration, settlement, or disposal facilities as required to comply with the requirements of Section 10-4, above.

10-6 NOISE CONTROL

The Contractor shall comply with all local noise control and noise level rules, regulations, and ordinances that apply to the Work. The Special Provisions may contain specific or additional requirements. Internal combustion engines used for any purpose on the Work must be equipped with a muffler recommended by the manufacturer.

10-7 CONTAMINATED AND HAZARDOUS MATERIALS OR ENVIRONMENTS

10-7.01 Contaminated or Hazardous Materials

The Contractor shall comply with all Federal, State and local rules, regulations, ordinances, and statutes that apply to the handling, storage, and disposal of contaminated and hazardous materials. All work involving material containing asbestos must be performed in accordance with California Labor Code, Sections 6501.5 through 6510 and California Code of Regulations, Title 8, Section 5208 and any other pertinent regulations.

10-7.02 Hazardous Environments

Existing sewers and appurtenances exposed to sewage and industrial wastes are considered contaminated with disease-causing organisms. The Contractor shall advise all personnel (including Subcontractor personnel) in contact with contaminated facilities, debris, wastewater, or similar items of the necessary precautions to avoid disease. It is the Contractor's responsibility to urge all personnel to observe a strict regimen of proper hygienic precautions, including any inoculations recommended by the local public health officer.

10-8 USE OF EXPLOSIVES

The Contractor shall not use explosives on the Work unless the City grants permission in writing or the use of explosives is specified in the Contract Documents, and then only under such conditions as the City prescribes.

10-9 SANITARY REGULATIONS

The Contractor shall comply with all Federal, State and local rules, regulations, ordinances, and statutes with respect to sanitation. The Contractor shall obey and enforce such sanitary requirements, and shall take precautions against contagious or infectious diseases. Sanitary conveniences for the use of the workers shall be constructed or installed and maintained by the Contractor. The Contractor shall strictly enforce use of such facilities.

10-10 CONFINED SPACES

10-10.01 Contractor Responsibilities and Qualifications

When working in a confined space, the Contractor shall comply with all confined space requirements of Title 8, General Industry Safety Orders (Cal-OSHA), Article 108, Sections 5156 through 5159.

Prior to any confined space entry, the Contractor shall submit for City review a copy of the entry permit and associated documentation. The Contractor's submittal shall be made thirty (30) days prior to any confined space entry in accordance with Section 5-8, above. The Contractor will not be allowed to make a permit-required confined space entry until the City has reviewed the Contractor's qualifications and proposed methods.

The Contractor shall conform to the procedures established by the Contractor's submittal during all confined space operations. Contractor shall provide all monitoring and safety equipment necessary to perform pre-entry checks of confined spaces. The Contractor shall also provide all monitoring, safety, and communications equipment required for confined space operations.

10-10.02 City Responsibilities for Permit Confined Spaces

The Contractor shall be provided with information regarding known hazards and known or potential permit spaces. After the City has reviewed the Contractor's submittal to perform permit-required confined space entry work, the Contractor will be provided with the following:

- Notification of the location, physical characteristics, known hazards, etc. regarding the permit-required confined space the Contractor anticipates entering.
- Information regarding safety items (e.g. nearby emergency equipment), precautions, procedures, safeguards, etc. installed or implemented and that may be available to the Contractor's employees in or near the permit-required confined space.

The City's failure to identify a confined space does not relieve the Contractor of the responsibility for compliance with the requirements of Article 108 (Cal-OSHA) and this Chapter.

10-10.03 Existing Sewers and Storm Drains

Because of the potential danger of solvents, gasoline, and other hazardous material in existing sewers and storm drain pipes, these areas shall be treated as permit-required confined spaces unless it has been proven, through appropriate testing, that no hazards exist or are expected to develop.

10-10.04 Joint City – Contractor Entries

Unless otherwise directed in writing by the City, when City employees work alongside the Contractor in a permit-required confined space, the permit procedures for both the City and the Contractor shall be used. The Entry Supervisor shall coordinate the requirements of both permit procedures prior to entry.

10-11 CLEANING UP

The Contractor shall keep the site in a neat and presentable condition. The Contractor shall dispose of surplus materials, clean out all drainage ditches and structures, and repair any fences or other property damaged during the progress of the Work. When material is disposed of outside of an easement, street, or highway right-of-way, or other City-owned properties, the Contractor shall do so in accordance with the Contract Documents.

10-12 ARCHEOLOGICAL AND CULTURAL RESOURCES

If archeological or cultural resources are discovered during the Work, the Contractor shall cease all construction operations in the vicinity of the discovery until a qualified archeologist can assess the value of these resources and make recommendations to the State Historic Preservation Officer. Archeological and cultural resources include artifacts, large amounts of bone, shell, or flaked stone, and other evidence of human activity. If the State Historic Preservation Officer or the City directs that work be temporarily ceased at the location of an archeological or cultural find, the Contractor shall temporarily suspend work at the location.

If the City or the State Historic Preservation Officer temporarily suspends a portion of the Work for cultural purposes, any associated delays are considered excusable in accordance with Section 7-12.02, “Excusable Delays”, above.

10-13 PROTECTION OF EXISTING TREES

Special attention shall be given to protection of certain native and ornamental trees or shrubs, landmark trees, and all native oak trees. Additional requirements for specific trees may be shown on the Plans, or designated in the Special Provisions or by the City. No native oak trees shall be removed or disturbed unless specifically designated for removal on the Plans or by the City. Every reasonable effort shall be made to avoid creating conditions adverse to the tree’s health. The natural ground three (3) fee outside of the drip line of protected trees shall remain as undisturbed as possible. All protected trees within the Work area that require pruning for construction clearance shall be pruned prior to commencement of construction. Native oak trees that require pruning of branches larger than two inches (2”) in diameter shall be pruned by a Certified Arborist.

CHAPTER 11 – PRECONSTRUCTION PHOTOGRAPHS AND RECORD DRAWINGS

TABLE OF CONTENTS

Section **Page**
11-1 GENERAL 136
11-2 PRECONSTRUCTION PHOTOGRAPHS 136
11-3 RECORD DRAWINGS 136
11-4 MEASUREMENT AND PAYMENT 137

CHAPTER 11 PRECONSTRUCTION PHOTOGRAPHS AND RECORD DRAWINGS

11-1 GENERAL

Preconstruction photographs will only be required when specified in the Special Provisions. Record Drawings are required on all City Work, unless directed otherwise in writing by the City.

11-2 PRECONSTRUCTION PHOTOGRAPHS

Preconstruction digital photographs shall be taken by the Contractor at one-hundred foot (100') intervals along the route of the Work before any construction begins. The view in each photograph shall show the date; and include name of the Project, lateral or street, and applicable station designation in the form of a sign or legend in the record book. The views in preconstruction photographs shall include the entire construction zone and, in particular, show the interface between the right-of-way and construction zone, and abutting property features such as, but not limited to, condition of existing streets, sidewalks, driveways, fences, landscaping, buildings abutting work site, and existing surface utility facilities on and close to the Work. All essential features of the project area shall be shown accurately. The City may order additional photographs showing additional features or orientations, if the City determines that all essential features are not accurately or adequately shown.

11-3 RECORD DRAWINGS

The Contractor shall maintain a neat and accurately marked set of Record Drawings (as-builts), which shall be provided to the City for review and approval prior to final acceptance of the Work. The Record Drawings shall represent the Work as constructed and document changes to the Work shown on the Project Plans, and shall show the actual as-constructed conditions of installed or modified systems, equipment, and material.

Record Drawings shall be produced by marking a full size copy of the Project Plans as follows:
Red - Additions including notes and dimensions.
Green - Deletions (by hash marks or appropriate lines through the deletion.)
Graphite (gray) - General comments and notes used by Contractor or City and not required on the as-built.
Yellow – Work completed as shown and used by the City in field review of the as-built, during the submittal phase.
Blue – City verification and notes required to be added and noted by the City in review of the as-built, during submittal phase.

The Record Drawings shall show, by field measured dimensions, the exact locations of all underground work, including all sprinkler system piping and components, and the final elevations and locations of all improvements constructed, modified or adjusted. Record Drawings shall be available for inspection by the City at all times and shall be updated at least weekly with all changes pertinent to Field Directives, other written directives, RFI responses, and Change Orders shown thereon. Progress payments or portions thereof may be withheld if Record Drawings are not kept up to date.

Unless otherwise specified in the Special Provisions, the Contractor shall submit two (2) sets of Record Drawings to the City at the final inspection for review. Upon approval, the Contractor shall submit one paper set and electronic versions (AutoCAD, PDF, or TIF) on CD or flash drive. These Record Drawings shall include certification by the Contractor that the Record Drawings are a true representation of the Work as actually constructed. The Work will not be formally accepted until the Record Drawings are provided to and approved by the City. Final payment or a portion thereof may be withheld if final Record Drawings are not provided.

11-4 MEASUREMENT AND PAYMENT

When the Contract includes a separate item for preconstruction photographs, preconstruction photographs will be paid for at a lump sum price. The lump sum price paid for preconstruction photographs includes full compensation for furnishing all labor, materials, tools, equipment, and incidentals and for doing all the work involved in taking and submitting preconstruction photographs, or optional video tape, as specified in these Specifications and the Special Provisions, and as directed by the City. When the Contract does not include a payment item for preconstruction photographs, full compensation for preconstruction photographs is included in the prices paid for the various items of work and no separate payment will be made.

Full compensation for Record Drawings is included in the prices paid for the various items of work and no separate payment will be made.

This Product MasterSpec Section is licensed by Deltek, Inc. to Generac Power Systems, Inc. ("Licensee").

This Product MasterSpec Section modifies the original MasterSpec text and does not include the full content of the original MasterSpec Section.

Revisions made to the original MasterSpec text are made solely by the Licensee and are not endorsed by, or representative of the opinions of, Deltek or The American Institute of Architects (AIA). Neither AIA nor Deltek are liable in any way for such revisions or for the use of this Product MasterSpec Section by any end user. A qualified design professional should review and edit the document to suit project requirements.

For more information, contact Generac Power Systems, Inc., 211 Murphy Drive, Eagle, WI 53119; Phone: (888) 436-3722; Website: http://www.generac.com; Email: Jesse.Chipman@generac.com.

For information about MasterSpec, contact Deltek at (800) 424-5080 or visit masterspec.com.

SECTION 263213.13 - DIESEL-ENGINE-DRIVEN GENERATOR SETS

TIPS:

To view non-printing **Editor's Notes** that provide guidance for editing, click on MasterWorks/Single-File Formatting/Toggle/Editor's Notes.

To read **detailed research, technical information about products and materials, and coordination checklists**, click on MasterWorks/Supporting Information.

PART 1 - GENERAL

1.1 SUMMARY

A. Section Includes:

1. Diesel engine.
2. Diesel fuel-oil system.
3. Control and monitoring.
4. Generator overcurrent and fault protection.
5. Generator, exciter, and voltage regulator.
6. Load bank.
7. Outdoor engine generator enclosure.
8. Vibration isolation devices.

B. Related Requirements:

1. Section 262313 "Paralleling Low-Voltage Switchgear" for controls and paralleling equipment for large or multiple parallel engine generators.
2. Section 263343 "Battery Chargers" for remote engine battery chargers.

3. Section 263600 "Transfer Switches" for transfer switches including sensors and relays to initiate automatic-starting and -stopping signals for engine generators.

1.2 DEFINITIONS

A. EPS: Emergency power supply.

B. EPSS: Emergency power supply system.

C. Operational Bandwidth: The total variation from the lowest to highest value of a parameter over the range of conditions indicated, expressed as a percentage of the nominal value of the parameter.

1.3 ACTION SUBMITTALS

A. Product Data: For each type of product.

1. Include rated capacities, operating characteristics, electrical characteristics, and furnished specialties and accessories.
2. Include thermal damage curve for generator.
3. Include time-current characteristic curves for generator protective device.
4. Include fuel consumption in gallons per hour (liters per hour) at 0.8 power factor at 0.5, 0.75, and 1.0 times generator capacity.
5. Include generator efficiency at 0.8 power factor at 0.5, 0.75, and 1.0 times generator capacity.
6. Include airflow requirements for cooling and combustion air in cubic feet per minute (cubic meters per minute) at 0.8 power factor, with air-supply temperature of 95, 80, 70, and 50 deg F (35, 27, 21, and 10 deg C). Provide Drawings indicating requirements and limitations for location of air intake and exhausts.
7. Include generator characteristics, including, but not limited to, kilowatt rating, efficiency, reactances, and short-circuit current capability.

B. Shop Drawings:

1. Include plans and elevations for engine generator and other components specified. Indicate access requirements affected by height of subbase fuel tank.
2. Include details of equipment assemblies. Indicate dimensions, weights, loads, required clearances, method of field assembly, components, and location and size of each field connection.
3. Identify fluid drain ports and clearance requirements for proper fluid drain.
4. Design calculations for selecting vibration isolators and seismic restraints and for designing vibration isolation bases.
5. Vibration Isolation Base Details: Detail fabrication including anchorages and attachments to structure and to supported equipment. Include base weights.
6. Include diagrams for power, signal, and control wiring. Complete schematic, wiring, and interconnection diagrams indicating terminal markings for engine generators and functional relationship between all electrical components.

1.4 INFORMATIONAL SUBMITTALS

A. Qualification Data: For [**Installer**] [**manufacturer**] [**and**] [**testing agency**].

B. Seismic Qualification Data: Certificates, for engine generator, accessories, and components, from manufacturer.

1. Basis for Certification: Indicate whether withstand certification is based on actual test of assembled components or on calculation.
2. Dimensioned Outline Drawings of Equipment Unit: With engine and generator mounted on rails, identify center of gravity and total weight[**, including full fuel tank**], [**supplied enclosure,**] [**external silencer,**] [**subbase-mounted fuel tank,**] and each piece of equipment not integral to the engine generator, and locate and describe mounting and anchorage provisions.
3. Detailed description of equipment anchorage devices on which the certification is based and their installation requirements.

C. Source Quality-Control Reports: Including, but not limited to, the following:

1. Certified summary of prototype-unit test report.
2. Certified Test Reports: For components and accessories that are equivalent, but not identical, to those tested on prototype unit.
3. Report of factory test on units to be shipped for this Project, indicating evidence of compliance with specified requirements.
4. Report of sound generation.
5. Report of exhaust emissions indicating compliance with applicable regulations.
6. Certified Torsional Vibration Compatibility: Comply with NFPA 110.

D. Field quality-control reports.

E. Warranty: For special warranty.

1.5 CLOSEOUT SUBMITTALS

A. Operation and Maintenance Data: For packaged engine generators to include in emergency, operation, and maintenance manuals.

1. In addition to items specified in Section 017823 "Operation and Maintenance Data," include the following:

a. List of tools and replacement items recommended to be stored at Project for ready access. Include part and drawing numbers, current unit prices, and source of supply.
b. Operating instructions laminated and mounted adjacent to generator location.
c. Training plan.

1.6 MAINTENANCE MATERIAL SUBMITTALS

A. Furnish extra materials that match products installed and that are packaged with protective covering for storage and identified with labels describing contents.

1. Fuses: One for every 10 of each type and rating, but no fewer than one of each.
2. Indicator Lamps: Two for every six of each type used, but no fewer than two of each.
3. Filters: One set each of lubricating oil, fuel, and combustion-air filters.
4. Tools: Each tool listed by part number in operations and maintenance manual.

1.7 QUALITY ASSURANCE

A. Manufacturer Qualifications: Current certificate holder for compliance with ISO 9001.

B. Installer Qualifications: An authorized representative who is trained and approved by manufacturer.

C. Testing Agency Qualifications: Accredited by NETA.

1. Testing Agency's Field Supervisor: Certified by NETA to supervise on-site testing.

1.8 WARRANTY

A. Manufacturer's Warranty: Manufacturer agrees to repair or replace components of packaged engine generators and associated auxiliary components that fail in materials or workmanship within specified warranty period.

1. Warranty Period: <**Insert number**> years from date of Substantial Completion.

PART 2 - PRODUCTS

2.1 MANUFACTURERS

A. Basis-of-Design Product: Subject to compliance with requirements, provide Generac Power Systems, Inc.; [**SD**] [**MD**] series or comparable product by one of the following:

1. Caterpillar, Inc.; Electric Power Division.
2. Cummins Power Generation.
3. <**Insert manufacturer's name**>.

B. Source Limitations: Obtain packaged engine generators and auxiliary components from single source from single manufacturer.

2.2 PERFORMANCE REQUIREMENTS

A. Seismic Performance: Engine generator housing, [**subbase fuel tank,**] [**day tank,**] engine generator, batteries, battery racks, silencers, [**load banks,**] sound attenuating equipment,

accessories, and components to withstand the effects of earthquake motions determined in accordance with [**ASCE/SEI 7**] <**Insert requirement**>.

1. The term "withstand" means "the unit will remain in place without separation of any parts when subjected to the seismic forces specified[**and the unit will be fully operational after the seismic event**]."
2. Shake-table testing shall comply with ICC-ES AC156. Testing shall be performed with all fluids at worst-case normal levels.[**Water shall be substituted for diesel fuel in fuel tank during test.**]
3. Component Importance Factor: [**1.5**] [**1.0**].

B. NFPA Compliance:

1. Comply with NFPA 37.
2. Comply with NFPA 70.
3. Comply with NFPA 99.
4. Comply with NFPA 110 requirements for Level [**1**] [**2**] EPSS.

C. UL Compliance: Comply with UL 2200.

D. Engine Exhaust Emissions: Comply with EPA Tier [**2**] [**3**] [**4**] requirements and applicable state and local government requirements.

E. Noise Emission: Comply with [**applicable state and local government requirements**] <**Insert Project criteria**> for maximum noise level at [**adjacent property boundaries**] <**Insert critical locations**> due to sound emitted by engine generator including engine, engine exhaust, engine cooling-air intake and discharge, and other components of installation.

F. Environmental Conditions: Engine generator system shall withstand the following environmental conditions without mechanical or electrical damage or degradation of performance capability:

1. Ambient Temperature: [**41 to 122 deg F (5 to 50 deg C)**] [**5 to 122 deg F (Minus 15 to plus 50 deg C)**].
2. Relative Humidity: Zero to 95 percent.
3. Altitude: Sea level to [**1000 ft. (300 m)**] <**Insert altitude**>.

G. Unusual Service Conditions: Engine generator equipment and installation are required to operate under the following conditions:

1. [**High salt-dust content in the air due to sea-spray evaporation**] <**Insert unusual condition**>.

2.3 ENGINE GENERATOR ASSEMBLY DESCRIPTION

A. Factory-assembled and -tested, water-cooled engine, with brushless generator and accessories.

B. Electrical Components, Devices, and Accessories: Listed and labeled as defined in NFPA 70, by a qualified testing agency, and marked for intended location and use.

C. Power Rating: [**Prime**] [**Standby**].

D. EPSS Class: Engine generator shall be classified as a [**Class 2**] [**Class 6**] [**Class 48**] [**Class 96**] <**Insert classification**> in accordance with NFPA 110.

E. Service Load: <**Insert number**> kVA.

F. Power Factor: [**0.8**] <**Insert number**>, lagging.

G. Frequency: 60 Hz.

H. Voltage: [**208**] [**240**] [**480**] [**600**] [**4160**]-V ac.

I. Phase: Three-phase, [**three**] [**four**] wire, [**wye**] [**delta**].

J. Induction Method: Turbocharged.

K. Governor: Adjustable isochronous, with speed sensing.

L. Mounting Frame: Structural steel framework to maintain alignment of mounted components without depending on concrete foundation. Provide lifting attachments sized and spaced to prevent deflection of base during lifting and moving.

1. Rigging Diagram: Inscribed on metal plate permanently attached to mounting frame to indicate location and lifting capacity of each lifting attachment and engine generator center of gravity.

M. Capacities and Characteristics:

1. Power Output Ratings: Nominal ratings as indicated at 0.8 power factor excluding power required for the continued and repeated operation of the unit and auxiliaries[**, with capacity as required to operate as a unit as evidenced by records of prototype testing**].
2. Nameplates: For each major system component to identify manufacturer's name and address, and model and serial number of component.

N. Engine Generator Performance:

1. Steady-State Voltage Operational Bandwidth: 3 percent of rated output voltage from no load to full load.
2. Transient Voltage Performance: Not more than 20 percent variation for 50 percent step-load increase or decrease. Voltage shall recover and remain within the steady-state operating band within three seconds.
3. Steady-State Frequency Operational Bandwidth: 0.5 percent of rated frequency from no load to full load.
4. Steady-State Frequency Stability: When system is operating at any constant load within the rated load, there shall be no random speed variations outside the steady-state operational band and no hunting or surging of speed.
5. Transient Frequency Performance: Less than 5 percent variation for 50 percent step-load increase or decrease. Frequency shall recover and remain within the steady-state operating band within five seconds.

6. Output Waveform: At no load, harmonic content measured line to line or line to neutral shall not exceed 5 percent total and 3 percent for single harmonics. Telephone influence factor, determined in accordance with NEMA MG 1, shall not exceed 50 percent.
7. Sustained Short-Circuit Current: For a three-phase, bolted short circuit at system output terminals, system shall supply a minimum of 300 percent of rated full-load current for not less than 10 seconds and then clear the fault automatically, without damage to generator system components.
8. Start Time:

    a. Comply with NFPA 110[**, Type 10**] system requirements.
    b. [**10**] <**Insert number**> seconds.

9. Start Time:

    a. Comply with NFPA 110[**, Type 10**] system requirements.
    b. [**10**] <**Insert number**> seconds.

O. Parallel Engine Generators:

1. Automatic reactive output power control and load sharing between engine generators operated in parallel.
2. Automatic regulation, automatic connection to a common bus, and automatic synchronization, with manual controls and instruments to monitor and control paralleling functions.
3. Protective relays required for equipment and personnel safety.
4. Paralleling suppressors to protect excitation systems.
5. Reverse power protection.
6. Loss of field protection.

2.4 DIESEL ENGINE

A. Fuel: ASTM D975, diesel fuel oil, Grade 2-D S15.

1. <**Insert specific fuel grade requirements**>.

B. Rated Engine Speed: 1800 rpm.

C. Lubrication System: Engine or skid-mounted.

1. Filter and Strainer: Rated to remove 90 percent of particles 5 micrometers and smaller while passing full flow.
2. Thermostatic Control Valve: Control flow in system to maintain optimum oil temperature. Unit shall be capable of full flow and is designed to be fail-safe.
3. Crankcase Drain: Arranged for complete gravity drainage to an easily removable container with no disassembly and without use of pumps, siphons, special tools, or appliances.

D. Jacket Coolant Heater: Electric-immersion type, factory installed in coolant jacket system. Comply with UL 499[**and with NFPA 110 requirements for Level 1 equipment for heater capacity**].

E. Integral Cooling System: Closed loop, liquid cooled, with radiator factory mounted on engine generator set mounting frame and integral engine-driven coolant pump.

1. Coolant: Solution of 50 percent ethylene-glycol-based antifreeze and 50 percent water, with anticorrosion additives as recommended by engine manufacturer.
2. Size of Radiator: Adequate to contain expansion of total system coolant from cold start to 110 percent load condition.
3. Expansion Tank: Constructed of welded steel plate and rated to withstand maximum closed-loop coolant system pressure for engine used. Equip with gauge glass and petcock.
4. Temperature Control: Self-contained, thermostatic-control valve modulates coolant flow automatically to maintain optimum constant coolant temperature as recommended by engine manufacturer.
5. Maximum Ambient Operating Temperature: 122 deg F (50 deg C).
6. Coolant Hose: Flexible assembly with inside surface of nonporous rubber and outer covering of aging-, UV-, and abrasion-resistant fabric.

   a. Rating: 50-psig (345-kPa) maximum working pressure with coolant at 180 deg F (82 deg C), and noncollapsible under vacuum.
   b. End Fittings: Flanges or steel pipe nipples with clamps to suit piping and equipment connections.

F. Muffler/Silencer:

1. Critical type, sized as recommended by engine manufacturer and selected with exhaust piping system to not exceed engine manufacturer's engine backpressure requirements.

   a. Sound level measured at a distance of 23 ft. (7 m) from exhaust discharge after installation is complete shall be [**78**] <**Insert number**> dBA or less.

2. Semicritical type, sized as recommended by engine manufacturer and selected with exhaust piping system to not exceed engine manufacturer's engine backpressure requirements.

   a. Sound level measured at a distance of 23 ft. (7 m) from exhaust discharge after installation is complete shall be [**85**] <**Insert number**> dBA or less.

G. Air-Intake Filter: [**Standard**] [**Heavy**]-duty, engine-mounted air cleaner with replaceable dry-filter element and "blocked filter" indicator.

H. Starting System: [**12**] [**24**]-V electric, with negative ground.

1. Components: Sized so they are not damaged during a full engine-cranking cycle with ambient temperature at maximum specified in "Performance Requirements" Article.
2. Cranking Motor: Heavy-duty unit that automatically engages and releases from engine flywheel without binding.
3. Cranking Cycle: As required by NFPA 110 for system level specified.

4. Battery: Lead acid, with capacity within ambient temperature range specified in "Performance Requirements" Article to provide specified cranking cycle at least [**twice**] [**three times**] without recharging.
5. Battery Cable: Size as recommended by engine manufacturer for cable length indicated. Include required interconnecting conductors and connection accessories.
6. Battery-Charging Alternator: Factory mounted on engine with solid-state voltage regulation and 35-A minimum continuous rating.
7. Battery Charger: Current-limiting, automatic-equalizing, and float-charging type designed for lead-acid batteries. Unit shall comply with UL 1236 and include the following features:

    a. Operation: Equalizing-charging rate of 10 A shall be initiated automatically after battery has lost charge until an adjustable equalizing voltage is achieved at battery terminals. Unit shall then be automatically switched to a lower float-charging mode and shall continue to operate in that mode until battery is discharged again.
    b. Automatic Temperature Compensation: Adjust float and equalize voltages for variations in ambient temperature from minus 40 to 140 deg F (minus 40 to plus 60 deg C) to prevent overcharging at high temperatures and undercharging at low temperatures.
    c. Automatic Voltage Regulation: Maintain constant output voltage regardless of input voltage variations up to plus or minus 10 percent.
    d. Ammeter and Voltmeter: Flush mounted in door. Meters shall indicate charging rates.
    e. Safety Functions: Sense abnormally low battery voltage and close contacts providing low battery voltage indication on control and monitoring panel. Sense high battery voltage and loss of ac input or dc output of battery charger. Either condition shall close contacts that provide a battery-charger malfunction indication at system control and monitoring panel.
    f. Enclosure and Mounting: NEMA 250, Type 1, wall-mounted cabinet.

2.5 DIESEL FUEL-OIL SYSTEM

A. Comply with NFPA 37.

B. Piping: Fuel-oil piping shall be Schedule 40 black steel, complying with requirements in Section 231113 "Facility Fuel-Oil Piping." Cast iron, aluminum, copper, and galvanized steel shall not be used in the fuel-oil system.

C. Main Fuel Pump: Mounted on engine to provide primary fuel flow under starting and load conditions.

D. Fuel Filtering: Remove water and contaminants larger than 1 micron.

E. Relief-Bypass Valve: Automatically regulates pressure in fuel line and returns excess fuel to source.

F. Fuel-Oil Storage Tank: Comply with requirements in [**Section 231313 "Facility Underground Fuel-Oil Storage Tanks."**] [**Section 231323 "Facility Aboveground Fuel-Oil Storage Tanks."**]

1. Fuel Tank Capacity: [**Minimum 133 percent of total fuel required for periodic maintenance operations between fuel refills plus fuel for the hours of continuous operation required for the indicated EPSS Class.**] [**As recommended by engine manufacturer for an uninterrupted period of 8 hours' operation at 100 percent of rated power output of engine generator system without being refilled**] <**Insert gallons (liters)**>.
2. Duplex Fuel-Oil Transfer Pump: Comply with requirements in Section 231213 "Facility Fuel-Oil Pumps."

G. Day Tank: Comply with UL 142, freestanding, factory-fabricated fuel tank assembly, with integral, float-controlled transfer pump and the following features:

1. Containment: Integral rupture basin with a capacity of 150 percent of nominal capacity of day tank.

   a. Leak Detector: Locate in rupture basin and connect to provide audible and visual alarm in the event of day-tank leak.

2. Tank Capacity: [**As recommended by engine manufacturer for an uninterrupted period of 4 hours' operation at 100 percent of rated power output of engine generator system without being refilled**] <**Insert gallons (liters)**>.
3. Pump Capacity: Exceeds maximum flow of fuel drawn by engine-mounted fuel supply pump at 110 percent of rated capacity, including fuel returned from engine.
4. Low-Level Alarm Sensor: Liquid-level device operates alarm contacts at 25 percent of normal fuel level.
5. High-Level Alarm Sensor: Liquid-level device operates alarm and redundant fuel shutoff contacts at midpoint between overflow level and 100 percent of normal fuel level.
6. Piping Connections: Factory-installed fuel supply and return lines from tank to engine; local fuel fill, vent line, overflow line; and tank drain line with shutoff valve.
7. Redundant High-Level Fuel Shutoff: Actuated by high-level alarm sensor in day tank to operate a separate motor-control device that disconnects day-tank pump motor. Sensor shall signal solenoid valve, located in fuel suction line between fuel storage tank and day tank, to close. Both actions shall remain in shutoff state until manually reset. Shutoff action shall initiate an alarm signal to control panel but shall not shut down engine generator.

H. Subbase-Mounted, Double-Wall, Fuel-Oil Tank: Factory installed and piped, complying with UL 142 fuel-oil tank. Features include the following:

1. Tank level indicator.
2. Fuel-Tank Capacity: Minimum 133 percent of total fuel required for planned operation plus fuel for periodic maintenance operations between fuel refills.
3. Leak detection in interstitial space.
4. Vandal-resistant fill cap.
5. Containment Provisions: Comply with requirements of authorities having jurisdiction.

2.6 CONTROL AND MONITORING

A. Automatic Starting System Sequence of Operation: When mode-selector switch on the control and monitoring panel is in the automatic position, remote-control contacts in one or more

separate automatic transfer switches initiate starting and stopping of engine generator. When mode-selector switch is switched to the on position, engine generator starts. The off position of same switch initiates engine generator shutdown. When engine generator is running, specified system or equipment failures or derangements automatically shut down engine generator and initiate alarms.

B. Manual Starting System Sequence of Operation: Switching on-off switch on the generator control panel to the on position starts engine generator. The off position of same switch initiates engine generator shutdown. When engine generator is running, specified system or equipment failures or derangements automatically shut down engine generator and initiate alarms.

C. Provide minimum run time control set for [**15**] [**30**] <**Insert number**> minutes with override only by operation of a remote emergency-stop switch.

D. Control panel must comply with UL 6200.

E. Connectivity: Native Ethernet, WiFi, and Bluetooth connectivity.

F. Web Browser Interface: All user interaction accomplished via standard web browser interface. Solutions requiring dedicated software for connectivity are not acceptable.

G. Remote Connectivity: User interface available both internally and externally to the user's network, based on network security preferences. All remote connectivity may be disabled at any time by the user.

H. Automated Notification: Controller capable of sending multiple automated [**e-mail**] [**and**] [**SMS**] alerts without intermediate service provider.

I. Notification Customization: User configurable allowing any operational or fault condition to initiate notification to any personnel including (but not limited to) generator service provider.

J. Environmentally Hardened Design: Open circuit boards, edge cards, and PC ribbon cable connections are unacceptable.

K. Circuit boards with surface-mounted components to provide vibration durability. Circuit boards utilizing large capacitors or heat sinks must utilize encapsulation methods to securely support these components.

L. Configuration:

1. Operating and safety indications, protective devices, basic system controls, and engine gauges shall be grouped in a common control and monitoring panel mounted on the engine generator. Mounting method shall isolate the control panel from engine generator vibration. Panel powered from the engine generator battery.

M. Control and Monitoring Panel:

1. Digital engine generator controller with integrated touch screen, controls, and microprocessor, capable of local and remote control, monitoring, and programming, with battery backup.
2. Instruments: Located on the control and monitoring panel and viewable during operation.

a. Engine lubricating-oil pressure gauge.
b. Engine-coolant temperature gauge.
c. DC voltmeter (alternator battery charging).
d. Running-time meter.
e. AC voltmeter, for each phase.
f. AC ammeter, for each phase.
g. AC frequency meter.
h. Generator-voltage adjusting feature.

3. Controls and Protective Devices: Controls, shutdown devices, and common alarm indication, including the following:

a. Cranking control equipment.
b. Run-Off-Auto switch.
c. Control switch not in automatic position alarm.
d. Overcrank alarm.
e. Overcrank shutdown device.
f. Low-water temperature alarm.
g. High engine temperature pre-alarm.
h. High engine temperature.
i. High engine temperature shutdown device.
j. Overspeed alarm.
k. Overspeed shutdown device.
l. Low fuel main tank.

1) Low-fuel-level alarm shall be initiated when the level falls below that required for operation for duration required [**for the indicated EPSS class**] [**in "Fuel Tank Capacity" Subparagraph in "Diesel Fuel-Oil System" Article**].

m. Coolant low-level alarm.
n. Coolant low-level shutdown device.
o. Coolant high-temperature prealarm.
p. Coolant high-temperature alarm.
q. Coolant low-temperature alarm.
r. Coolant high-temperature shutdown device.
s. EPS load indicator.
t. Battery high-voltage alarm.
u. Low cranking voltage alarm.
v. Battery-charger malfunction alarm.
w. Battery low-voltage alarm.
x. Lamp test.
y. Contacts for local and remote common alarm.
z. Remote manual stop shutdown device.
aa. Generator overcurrent-protective-device not-closed alarm.
bb. Hours of operation.
cc. Engine generator metering, including voltage, current, hertz, kilowatt, kilovolt ampere, and power factor.

N. Engine Generator Metering: Comply with [**Section 260913 "Electrical Power Monitoring and Control."**] [**Section 262713 "Electricity Metering."**] [**Section 260913 "Electrical Power Monitoring and Control" and Section 262713 "Electricity Metering."**]

O. Connection to Datalink:

1. A separate terminal block, factory wired to Form C dry contacts, for each alarm and status indication.
2. Provide connections for datalink transmission of indications to remote data terminals via [**ModBus**] [**Ethernet**] [**SNMP**] <**Insert data protocol**>. Data system connections to terminals are covered in Section 260913 "Electrical Power Monitoring and Control."

P. Common Remote Panel with Common Audible Alarm: Include necessary contacts and terminals in control and monitoring panel. Remote panel shall be powered from the engine generator battery.

Q. Remote Alarm Annunciator: An LED indicator light labeled with proper alarm conditions shall identify each alarm event, and a common audible signal shall sound for each alarm condition. Silencing switch in face of panel shall silence signal without altering visual indication. Connect so that after an alarm is silenced, clearing of initiating condition will reactivate alarm until silencing switch is reset. Cabinet and faceplate are surface- or flush-mounting type to suit mounting conditions indicated.

1. Overcrank alarm.
2. Low water-temperature alarm.
3. High engine temperature pre-alarm.
4. High engine temperature alarm.
5. Low lube oil pressure alarm.
6. Overspeed alarm.
7. Low fuel main tank alarm.
8. Low coolant level alarm.
9. Low cranking voltage alarm.
10. Contacts for local and remote common alarm.
11. Audible-alarm silencing switch.
12. Air shutdown damper when used.
13. Run-Off-Auto switch.
14. Control switch not in automatic position alarm.
15. Fuel tank derangement alarm.
16. Fuel tank high-level shutdown of fuel supply alarm.
17. Lamp test.
18. Low-cranking voltage alarm.
19. Generator overcurrent-protective-device not-closed alarm.

R. Remote Emergency-Stop Switch: Flush; wall mounted unless otherwise indicated; and labeled. Push button shall be protected from accidental operation.

2.7 GENERATOR OVERCURRENT AND FAULT PROTECTION

A. Overcurrent protective devices shall be coordinated to optimize selective tripping when a short circuit occurs.

1. Overcurrent protective devices for the entire EPSS shall be coordinated to optimize selective tripping when a short circuit occurs. Coordination of protective devices shall consider both utility and EPSS as the voltage source.

2. Overcurrent protective devices for the EPSS shall be accessible only to authorized personnel.

B. Generator Overcurrent Protective Device:

1. Molded-case circuit breaker, thermal-magnetic type; 100 percent rated; complying with UL 489:

   a. Tripping Characteristic: Designed specifically for generator protection.
   b. Trip Rating: Matched to generator output rating.
   c. Shunt Trip: Connected to trip breaker when engine generator is shut down by other protective devices.
   d. Mounting: Adjacent to, or integrated with, control and monitoring panel.

2. Molded-case circuit breaker, electronic-trip type; 100 percent rated; complying with UL 489:

   a. Tripping Characteristics: Adjustable long-time and short-time delay and instantaneous.
   b. Trip Settings: Selected to coordinate with generator thermal damage curve.
   c. Shunt Trip: Connected to trip breaker when engine generator is shut down by other protective devices.
   d. Mounting: Adjacent to, or integrated with, control and monitoring panel.

3. Insulated-case circuit breaker, electronic-trip type; 100 percent rated; complying with UL 489:

   a. Tripping Characteristics: Adjustable long-time and short-time delay and instantaneous.
   b. Trip Settings: Selected to coordinate with generator thermal damage curve.
   c. Shunt Trip: Connected to trip breaker when engine generator is shut down by other protective devices.
   d. Mounting: Adjacent to, or integrated with, control and monitoring panel.

4. Molded-case type disconnect switch; 100 percent rated:

   a. Trip Rating: Matched to generator output rating.
   b. Shunt Trip: Connected to trip switch when signaled by generator protector or by other protective devices.

C. Generator Protector: Microprocessor-based unit shall continuously monitor current level in each phase of generator output, integrate generator heating effect over time, and predict when thermal damage of alternator will occur. When signaled by generator protector or other engine generator protective devices, a shunt-trip device in the generator disconnect switch shall open the switch to disconnect the generator from load circuits. Protector performs the following functions:

1. Initiates a generator overload alarm when generator has operated at an overload equivalent to 110 percent of full-rated load for 60 seconds. Indication for this alarm is integrated with other engine generator malfunction alarms. Contacts shall be available for load shed functions.
2. Under single- or three-phase fault conditions, regulates generator to 300 percent of rated full-load current for up to 10 seconds.
3. As overcurrent heating effect on the generator approaches the thermal damage point of the unit, protector switches the excitation system off, opens the generator disconnect device, and shuts down the engine generator.
4. Senses clearing of a fault by other overcurrent devices and controls recovery of rated voltage to avoid overshoot.

D. Ground-Fault Indication: Comply with NFPA 70, "Emergency System" signals for ground fault.

1. Indicate ground fault with other engine generator alarm indications.
2. Trip generator protective device on ground fault.

E. Arc Energy Reduction: Comply with NFPA 70 for arc energy reduction for circuit breakers 1200A and greater.

1. Energy-reducing maintenance switch with local status indicator.
2. Instantaneous override that is less than the available arcing current.

2.8 GENERATOR, EXCITER, AND VOLTAGE REGULATOR

A. Comply with NEMA MG 1.

B. Drive: Generator shaft shall be directly connected to engine shaft. Exciter shall be rotated integrally with generator rotor.

C. Electrical Insulation: Class H.

D. Stator-Winding Leads: Brought out to terminal box to permit future reconnection for other voltages if required. Provide [**six**] [**12**]-lead alternator.

E. Range: Provide [**limited**] [**broad**] [**extended**] range of output voltage by adjusting the excitation level.

F. Construction shall prevent mechanical, electrical, and thermal damage due to vibration, overspeed up to 125 percent of rating, and heat during operation at 110 percent of rated capacity.

G. Enclosure: Dripproof.

H. Instrument Transformers: Mounted within generator enclosure.

I. Voltage Regulator: Solid-state type, separate from exciter, providing performance as specified[**and as required by NFPA 110**].

1. Voltage Adjustment on Control and Monitoring Panel: Provide plus or minus 5 percent adjustment of output-voltage operating band.
2. Maintain voltage within [**15**] [**20**] [**30**] percent on one step, full load.
3. Provide anti-hunt provision to stabilize voltage.
4. Maintain frequency within [**5**] [**10**] [**15**] percent and stabilize at rated frequency within [**2**] [**5**] seconds.

J. Strip Heater: Thermostatically controlled unit arranged to maintain stator windings above dew point.

K. Windings: Two-thirds pitch stator winding and fully linked amortisseur winding.

L. Subtransient Reactance: 15 percent maximum, based on the rating of the engine generator set.

2.9 LOAD BANK

A. Description:

1. Permanent, outdoor, weatherproof, remote-controlled, forced-air-cooled, [**resistive**] [**resistive and reactive**] unit capable of providing a balanced three-phase, delta-connected load to engine generator at [**100**] <**Insert number**> percent rated-system capacity, at [**80**] <**Insert number**> percent power factor, lagging.[**Unit may contain separate resistive and reactive load banks controlled by a common control panel.**] Unit shall be capable of selective control of load in 25 percent steps and with minimum step changes of approximately 5 and 10 percent available.
2. Permanent, radiator-mounted[**, resistive**] unit capable of providing a balanced three-phase, delta-connected load to engine generator at [**50**] [**70**] <**Insert number**> percent rated-system capacity. Unit shall be capable of selective control of load in 25 percent steps of load-bank rating and with minimum step changes of approximately 5 and 10 percent available.

B. Resistive Load Elements: Corrosion-resistant chromium alloy with ceramic and stainless steel supports. Elements shall be double insulated and designed for repetitive on-off cycling. Elements shall be mounted in removable aluminized-steel heater cases. Galvanized steel is prohibited. Element's maximum resistance shall be between 100 and 105 percent of rated resistance.

C. Reactive Load Elements: Epoxy-encapsulated reactor coils.

D. Load-Bank Heat Dissipation: Integral fan with totally enclosed motor shall provide uniform cooling airflow through load elements. Airflow and coil operating current shall be such that, at maximum load, with ambient temperature at the upper end of specified range, load-bank elements operate at not more than 50 percent of maximum continuous temperature rating of resistance elements.

E. Load-Element Switching: Remote-controlled contactors switch groups of load elements. Contactor coils are rated 120 V. Contactors shall be located in a separate NEMA 250, Type 3R enclosure within load-bank enclosure, accessible from exterior through hinged doors with tumbler locks.

F. Contactor Enclosures: Heated by thermostatically controlled strip heaters to prevent condensation.

G. Load-Bank Enclosures: NEMA 250, Type 3R, aluminized steel complying with NEMA ICS 6. Louvers at cooling-air intake and discharge openings shall prevent entry of rain and snow. Openings for airflow shall be screened with 1/2-inch- (13-mm-) square, galvanized-steel mesh. Reactive load bank shall include automatic shutters at air intake and discharge. Components other than resistive elements shall receive exterior epoxy coating with compatible primer. Comply with requirements in Section 099600 "High-Performance Coatings."

H. Protective Devices: Power input circuits to load banks shall be fused, and fuses shall be selected to coordinate with generator circuit breaker. Fuse blocks shall be located in contactor enclosure. Cooling airflow and overtemperature sensors shall automatically shut down and lock out load bank until manually reset. Safety interlocks on access panels and doors shall disconnect load power, control, and heater circuits. Fan motor shall be separately protected by overload and short-circuit devices. Short-circuit devices shall be noninterchangeable fuses with 200,000-A interrupting capacity.

I. Load-Bank Remote-Control Panel: Separate from load bank in NEMA 250, Type 1 enclosure with a control power switch and pilot light, and switches controlling groups of load elements.

J. Control Sequence: Control panel may be preset for adjustable single-step loading of generator during automatic exercising.

2.10 OUTDOOR ENGINE GENERATOR ENCLOSURE

A. Generator packaged within[**weather-protective**] enclosure.

B. Sound Insulation: Enclosure and air discharge hood completely lined with 3 inches (76 mm) of fiberglass and perforated aluminum.

C. Enclosure Construction: Minimum 14 gauge [**Steel**] [**Aluminum**] with hinged, removable doors to allow access to the engine, alternator, and control panel. Adjustable hinges for door alignment. Hinges and all exposed fasteners must be stainless steel. Pop-rivets weaken the paint system and are not allowed on external painted surfaces. Each door equipped with lockable hardware and identical keys.

D. Upward discharging enclosure ventilation exhaust hood.

E. Enclosure Finish: Electrostatic applied powered paint, baked and finished to manufacturer's specifications.

F. Enclosure Color: [**Manufacturer's standard**] [**Color matched to provided sample**].

G. Silencer mounted on top of enclosure.

H. Thermostatically controlled space heater factory installed within enclosure designed to maintain minimum internal temperature at 40 deg F (4 deg C).

I. Engine-Cooling Airflow through Enclosure: Maintain temperature rise of system components within required limits when unit operates at 110 percent of rated load for two hours with ambient temperature at top of range specified in system service conditions.

1. Louvers: Fixed-engine, cooling-air inlet and discharge. Stormproof and drainable louvers prevent entry of rain and snow.
2. Automatic Dampers: At engine cooling-air inlet and discharge. Dampers shall be closed to reduce enclosure heat loss in cold weather when unit is not operating.
3. Ventilation: Provide temperature-controlled exhaust fan interlocked to prevent operation when engine is running.

J. Interior Lights with Switch: Factory-wired, vapor-proof luminaires within housing; arranged to illuminate controls and accessible interior. Arrange for external electrical connection.

1. AC lighting system and connection point for operation when remote source is available.
2. DC lighting system for operation when remote source and generator are both unavailable.

K. Convenience Outlets: Factory-wired, GFCI. Arrange for external electrical connection.

2.11 VIBRATION ISOLATION DEVICES

A. Elastomeric Isolator Pads: Oil- and water-resistant elastomer or natural rubber, arranged in single or multiple layers, molded with a nonslip pattern and galvanized-steel baseplates of sufficient stiffness for uniform loading over pad area, and factory cut to sizes that match requirements of supported equipment.

1. Material: Standard neoprene separated by steel shims.
2. Shore A Scale Durometer Rating: [**70**] <**Insert number**>.
3. Number of Layers: [**One**] <**Insert number**>.

B. Restrained Spring Isolators: Freestanding, steel, open-spring isolators with seismic restraint.

1. Housing: Steel with resilient vertical-limit stops to prevent spring extension due to wind loads or if weight is removed; factory-drilled baseplate bonded to 1/4-inch- (6-mm-) thick, elastomeric isolator pad attached to baseplate underside; and adjustable equipment-mounting and -leveling bolt that acts as blocking during installation.
2. Outside Spring Diameter: Not less than 80 percent of compressed height of the spring at rated load.
3. Minimum Additional Travel: 50 percent of required deflection at rated load.
4. Lateral Stiffness: More than 80 percent of rated vertical stiffness.
5. Overload Capacity: Support 200 percent of rated load, fully compressed, without deformation or failure.
6. Minimum Deflection: [**1 inch (25 mm)**] <**Insert value**>.

C. Comply with requirements in Section 232116 "Hydronic Piping Specialties" for vibration isolation and flexible connector materials for steel piping.

D. Comply with requirements in Section 233113 "Metal Ducts" for vibration isolation and flexible connector materials for exhaust shroud and ductwork.

E. Vibration isolation devices shall not be used to accommodate misalignments or to make bends.

2.12 FINISHES

A. Indoor and Outdoor Enclosures and Components: Manufacturer's standard finish over corrosion-resistant pretreatment and compatible primer.

B. Powder coated paint surfaces:

1. Minimum Paint Thickness: 2.5 mil (0.06 mm) in accordance with ASTM D 1186-87.
2. Material Hardness: ASTM D3363-92a.
3. Resistance to Cracking: ASTM D522-B.
4. Paint Adhesion: ASTM D3359-B.
5. Resistance to Salt Water Corrosion: ASTM B117, ASTM D1654.
6. Resistance to Humidity: ASTM D1735, ASTM D1654.
7. Impact Resistance: ASTM 2784.
8. UV Protection: SAE J1690.

2.13 SOURCE QUALITY CONTROL

A. Prototype Testing: Factory test engine generator using same engine model, constructed of identical or equivalent components and equipped with identical or equivalent accessories.

1. Tests: Comply with IEEE 115[**and with NFPA 110, Level 1 Energy Converters**].

B. Project-Specific Equipment Tests: Before shipment, factory test engine generator and other system components and accessories manufactured specifically for this Project. Perform tests at rated load and power factor. Include the following tests:

1. Test components and accessories furnished with installed unit that are not identical to those on tested prototype to demonstrate compatibility and reliability.
2. Test generator, exciter, and voltage regulator as a unit.
3. Full load run.
4. Maximum power.
5. Voltage regulation.
6. Transient and steady-state governing.
7. Single-step load pickup.
8. Safety shutdown.
9. Provide 14 days' advance notice of tests and opportunity for observation of tests by Owner's representative.
10. Report factory test results within 10 days of completion of test.

PART 3 - EXECUTION

3.1 EXAMINATION

A. Examine areas, equipment bases, and conditions, with Installer present, for compliance with requirements for installation and other conditions affecting packaged engine generator performance.

B. Examine roughing-in for piping systems and electrical connections. Verify actual locations of connections before packaged engine generator installation.

C. Proceed with installation only after unsatisfactory conditions have been corrected.

3.2 PREPARATION

A. Interruption of Existing Electrical Service: Do not interrupt electrical service to facilities occupied by Owner or others unless permitted under the following conditions and then only after arranging to provide temporary electrical service in accordance with requirements indicated:

1. Notify [**Architect**] [**Construction Manager**] [**Owner**] no fewer than [**two**] <**Insert number**> working days in advance of proposed interruption of electrical service.
2. Do not proceed with interruption of electrical service without [**Architect's**] [**Construction Manager's**] [**Owner's**] written permission.

3.3 INSTALLATION

A. Comply with NECA 1 and NECA 404.

B. Comply with packaged engine generator manufacturers' written installation and alignment instructions[**and with NFPA 110**].

C. Equipment Mounting:

1. Install packaged engine generators on cast-in-place concrete equipment bases. Comply with requirements for equipment bases and foundations specified in Section 033000 "Cast-in-Place Concrete."
2. Coordinate size and location of concrete bases for packaged engine generators. Cast anchor-bolt inserts into bases. Concrete, reinforcement, and formwork requirements are specified with concrete.
3. Install [**packaged engine generator**] [**engine generator in a walk-in enclosure**] with [**elastomeric isolator pads**] [**restrained spring isolators**] having a minimum deflection of [**1 inch (25 mm)**] <**Insert static deflection**> on 4-inch- (100-mm-) high concrete base. Secure [**sets**] [**enclosure**] to anchor bolts installed in concrete bases. Concrete base construction is specified in Section 260548.16 "Seismic Controls for Electrical Systems."
4. Remote Radiators:

a. Install remote radiator with [**elastomeric isolator pads**] [**restrained spring isolators**] on [**concrete base on grade**] [**roof equipment supports on roof**].
b. Coordinate size and location of roof curbs, equipment supports, and roof penetrations for remote radiators. These items are specified in Section 077200 "Roof Accessories."

D. Install packaged engine generator to provide access, without removing connections or accessories, for periodic maintenance.

E. Cooling System: Install Schedule 40 black steel piping with welded joints for cooling water piping between engine generator and [**heat exchanger**] [**remote radiator**]. Piping materials and installation requirements are specified in Section 232113 "Hydronic Piping."

1. Install isolating thimbles where exhaust piping penetrates combustible surfaces. Provide a minimum of 9 inches (225 mm) of clearance from combustibles.
2. Insulate cooling-system piping and components in accordance with requirements in Section 230719 "HVAC Piping Insulation."

F. Exhaust System: Install Schedule 40 black steel piping with welded joints and connect to engine muffler. Install thimble at wall. Piping shall be same diameter as muffler outlet.

1. Piping materials and installation requirements are specified in Section 232113 "Hydronic Piping."
2. Install flexible connectors and steel piping materials in accordance with requirements in Section 232116 "Hydronic Piping Specialties."
3. Insulate muffler/silencer and exhaust system components in accordance with requirements in Section 230719 "HVAC Piping Insulation."
4. Install isolating thimbles where exhaust piping penetrates combustible surfaces with a minimum of 9 inches (225 mm) of clearance from combustibles.

G. Drain Piping: Install condensate drain piping to muffler drain outlet full size of drain connection with a shutoff valve, stainless steel flexible connector, and Schedule 40 black steel pipe with welded joints.

1. Piping materials and installation requirements are specified in Section 232113 "Hydronic Piping."
2. Drain piping valves, connectors, and installation requirements are specified in Section 232116 "Hydronic Piping Specialties."

H. Fuel Piping:

1. Diesel storage tanks, tank accessories, piping, valves, and specialties for fuel systems are specified in Section 231113 "Facility Fuel-Oil Piping."
2. Copper and galvanized steel shall not be used in the fuel-oil piping system.

I. Install electrical devices furnished by equipment manufacturers but not specified to be factory mounted.

3.4 CONNECTIONS

A. Piping installation requirements are specified in other Sections. Drawings indicate general arrangement of piping and specialties.

B. Connect fuel, cooling-system, and exhaust-system piping adjacent to packaged engine generator to allow space for service and maintenance.

C. Connect cooling-system water piping to engine generator and [**remote radiator**] [**heat exchanger**] with flexible connectors.

D. Connect engine exhaust pipe to engine with flexible connector.

E. Connect fuel piping to engines with a gate valve and union and flexible connector.

F. Ground equipment in accordance with Section 260526 "Grounding and Bonding for Electrical Systems."

G. Connect wiring in accordance with Section 260519 "Low-Voltage Electrical Power Conductors and Cables." Provide a minimum of one 90-degree bend in flexible conduit routed to the engine generator from a stationary element.

H. Balance single-phase loads to obtain a maximum of 10 percent unbalance between any two phases.

3.5 IDENTIFICATION

A. Identify system components in accordance with Section 230553 "Identification for HVAC Piping and Equipment" and Section 260553 "Identification for Electrical Systems."

B. Install a sign indicating the generator neutral is bonded to the main service neutral at the main service location.

3.6 FIELD QUALITY CONTROL

A. Testing Agency:

1. Owner will engage a qualified testing agency to perform tests and inspections.
2. Engage a qualified testing agency to perform tests and inspections.
3. Engage a factory-authorized service representative to test and inspect components, assemblies, and equipment installations, including connections.
4. Perform tests and inspections[**with the assistance of a factory-authorized service representative**].

B. Tests and Inspections:

1. Perform tests recommended by manufacturer and each visual and mechanical inspection and electrical and mechanical test listed in first two subparagraphs below, as specified in NETA ATS. Certify compliance with test parameters.

a. Visual and Mechanical Inspection:

1) Compare equipment nameplate data with Drawings and the Specifications.
2) Inspect physical and mechanical condition.
3) Inspect anchorage, alignment, and grounding.
4) Verify that the unit is clean.

b. Electrical and Mechanical Tests:

1) Test protective relay devices.
2) Verify phase rotation, phasing, and synchronized operation as required by the application.
3) Functionally test engine shutdown for low oil pressure, overtemperature, overspeed, and other protection features as applicable.
4) Perform vibration test for each main bearing cap.
5) Verify correct functioning of the governor and regulator.

2. NFPA 110 Acceptance Tests: Perform tests required by NFPA 110 that are additional to those specified here, including, but not limited to, single-step full-load pickup test.
3. Battery Tests: Equalize charging of battery cells in accordance with manufacturer's written instructions. Record individual cell voltages.

a. Measure charging voltage and voltages between available battery terminals for full-charging and float-charging conditions. Check electrolyte level and specific gravity under both conditions.
b. Test for contact integrity of all connectors. Perform an integrity load test and a capacity load test for the battery.
c. Verify acceptance of charge for each element of the battery after discharge.
d. Verify that measurements are within manufacturer's specifications.

4. Battery-Charger Tests: Verify specified rates of charge for both equalizing and float-charging conditions.
5. System Integrity Tests: Methodically verify proper installation, connection, and integrity of each element of engine generator system before and during system operation. Check for air, exhaust, and fluid leaks.
6. Exhaust-System Back-Pressure Test (non-enclosed units): Use a manometer with a scale exceeding 40-inch wg (120 kPa). Connect to exhaust line close to engine exhaust manifold. Verify that back pressure at full-rated load is within manufacturer's written allowable limits for the engine.
7. Exhaust Emissions Test: Comply with applicable government test criteria.
8. Voltage and Frequency Transient Stability Tests: Use recording oscilloscope to measure voltage and frequency transients for 50 and 100 percent step-load increases and decreases, and verify that performance is as specified.
9. Harmonic-Content Tests: Measure harmonic content of output voltage at 25 and 100 percent of rated linear load. Verify that harmonic content is within specified limits.
10. Noise Level Tests: Measure A-weighted level of noise emanating from engine generator installation, including engine exhaust and cooling-air intake and discharge, at [**four**] <**Insert number**> locations [**23 ft. (7 m) from edge of the generator enclosure**] [**on the property line**] <**Insert location for measurement**>, and compare measured levels with required values.

C. Coordinate tests with tests for transfer switches and run them concurrently.

D. Test instruments shall have been calibrated within the past 12 months, traceable to NIST Calibration Services, and adequate for making positive observation of test results. Make calibration records available for examination on request.

E. Leak Test: After installation, charge exhaust, coolant, and fuel systems and test for leaks. Repair leaks and retest until no leaks exist.

F. Operational Test: After electrical circuitry has been energized, start units to confirm proper motor rotation and unit operation for generator and associated equipment.

G. Test and adjust controls and safeties. Replace damaged and malfunctioning controls and equipment.

H. Remove and replace malfunctioning units and [**retest**] [**reinspect**] as specified above.

I. Retest: Correct deficiencies identified by tests and observations, and retest until specified requirements are met.

J. Report results of tests and inspections in writing. Record adjustable relay settings and measured insulation resistances, time delays, and other values and observations. Attach a label or tag to each tested component indicating satisfactory completion of tests.

3.7 MAINTENANCE SERVICE

A. Initial Maintenance Service: Beginning at Substantial Completion, maintenance service shall include [**12**] <**Insert number**> months' full maintenance by skilled employees of manufacturer's authorized service representative. Include quarterly preventive maintenance and exercising to check for proper starting, load transfer, and running under load. Include routine preventive maintenance as recommended by manufacturer and adjusting as required for proper operation. Parts shall be manufacturer's authorized replacement parts and supplies.

3.8 DEMONSTRATION

A. Engage a factory-authorized service representative to train Owner's maintenance personnel to adjust, operate, and maintain packaged engine generators.

END OF SECTION 263213.13

SD275 | 10.3L | 275 kW

INDUSTRIAL DIESEL GENERATOR SET

EPA Certified Stationary Emergency

GENERAC® | INDUSTRIAL POWER

Standby Power Rating
275 kW, 344 kVA, 60 Hz

Prime Power Rating*
248 kW, 309 kVA, 60 Hz

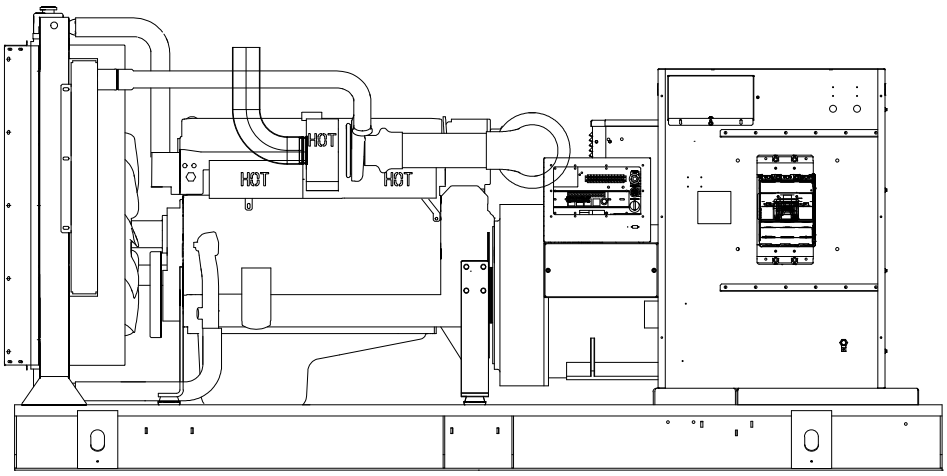

Image used for illustration purposes only

ISO 9001:2008

USA ENGINEERED & BUILT*

*Assembled in the USA using domestic and foreign parts

*EPA Certified Prime ratings are not available in the US or its Territories

Codes and Standards

Not all codes and standards apply to all configurations. Contact factory for details.

UL2200, UL6200, UL1236, UL489, UL142

CSA C22.2, ULC S601

BS5514 and DIN 6271

SAE J1349

NFPA 37, 70, 99, 110

NEC700, 701, 702, 708

ISO 3046, 7637, 8528, 9001

NEMA ICS10, MG1, 250, ICS6, AB1

ANSI C62.41

IBC 2009, CBC 2010, IBC 2012, ASCE 7-05, ASCE 7-10, ICC-ES AC-156 (2012)

Powering Ahead

For over 60 years, Generac has provided innovative design and superior manufacturing.

Generac ensures superior quality by designing and manufacturing most of its generator components, including alternators, enclosures and base tanks, control systems and communications software.

Generac gensets utilize a wide variety of options, configurations and arrangements, allowing us to meet the standby power needs of practically every application.

Generac searched globally to ensure the most reliable engines power our generators. We choose only engines that have already been proven in heavy-duty industrial applications under adverse conditions.

Generac is committed to ensuring our customers' service support continues after their generator purchase.

SD275 | 10.3L | 275 kW

INDUSTRIAL DIESEL GENERATOR SET

EPA Certified Stationary Emergency

GENERAC® | INDUSTRIAL POWER

STANDARD FEATURES

ENGINE SYSTEM

- Oil Drain Extension
- Level 1 Fan and Belt Guards (Open Set Only)
- Stainless Steel Flexible Exhaust Connection
- Factory Filled Oil and Coolant
- Radiator Duct Adapter (Open Set Only)

FUEL SYSTEM

- Fuel Lockoff Solenoid
- Primary Fuel Filter

COOLING SYSTEM

- Closed Coolant Recovery System
- UV/Ozone Resistant Hoses
- Factory-Installed Radiator
- Radiator Drain Extension
- 50/50 Ethylene Glycol Antifreeze
- Engine Coolant Heater

ELECTRICAL SYSTEM

- Battery Charging Alternator
- Battery Cables
- Battery Tray
- Rubber-Booted Engine Electrical Connections
- Solenoid Activated Starter Motor

ALTERNATOR SYSTEM

- UL2200 GENprotect™
- 12 Leads (3-Phase, Non 600V)
- Class H Insulation Material
- Vented Rotor
- 2/3 Pitch
- Skewed Stator
- Auxiliary Voltage Regulator Power Winding
- Permanent Magnet Excitation
- Sealed Bearing
- Automated Manufacturing (Winding, Insertion, Lacing, Varnishing)
- Rotor Dynamically Spin Balanced
- Amortisseur Winding
- Full Load Capacity Alternator
- Protective Thermal Switch

GENERATOR SET

- Internal Genset Vibration Isolation
- Separation of Circuits - High/Low Voltage
- Separation of Circuits - Multiple Breakers
- Wrapped Exhaust Piping
- Standard Factory Testing
- 2 Year Limited Warranty (Standby Rated Units)
- 1 Year Limited Warranty (Prime Rated Units)
- Silencer Mounted in the Discharge Hood (Enclosed Unit Only)

ENCLOSURE (If Selected)

- Rust-Proof Fasteners with Nylon Washers to Protect Finish
- High Performance Sound-Absorbing Material (Sound Attenuated Enclosures)
- Gasketed Doors
- Upward Facing Discharge Hoods (Radiator and Exhaust)
- Stainless Steel Lift Off Door Hinges
- Stainless Steel Lockable Handles
- RhinoCoat™ - Textured Polyester Powder Coat Paint

FUEL TANKS (If Selected)

- UL 142/ULC S601
- Double Wall
- Vents
- Sloped Top
- Sloped Bottom
- Factory Pressure Tested - 2 psi
- Rupture Basin Alarm
- Fuel Level
- Check Valve In Supply and Return Lines
- RhinoCoat™ - Textured Polyester Powder Coat Paint
- Stainless Steel Hardware

CONTROL SYSTEM

Digital H Control Panel- Dual 4x20 Display

Program Functions

- Programmable Crank Limiter
- 7-Day Programmable Exerciser
- Special Applications Programmable Logic Controller
- RS-232/485 Communications
- All Phase Sensing Digital Voltage Regulator
- 2-Wire Start Capability
- Date/Time Fault History (Event Log)
- Isochronous Governor Control
- Waterproof/Sealed Connectors
- Audible Alarms and Shutdowns
- Not in Auto (Flashing Light)
- Auto/Off/Manual Switch
- E-Stop (Red Mushroom-Type)
- NFPA110 Level I and II (Programmable)
- Customizable Alarms, Warnings, and Events
- Modbus® Protocol
- Predictive Maintenance Algorithm
- Sealed Boards
- Password Parameter Adjustment Protection
- Single Point Ground
- 16 Channel Remote Trending
- 0.2 msec High Speed Remote Trending
- Alarm Information Automatically Annunciated on the Display

Full System Status Display

- Power Output (kW)
- Power Factor
- kW Hours, Total, and Last Run
- Real/Reactive/Apparent Power
- All Phase AC Voltage
- All Phase Currents
- Oil Pressure
- Coolant Temperature
- Coolant Level
- Engine Speed
- Battery Voltage
- Frequency

Alarms and Warnings

- Oil Pressure
- Coolant Temperature
- Coolant Level
- Engine Overspeed
- Battery Voltage
- Alarms and Warnings Time and Date Stamped
- Snap Shots of Key Operation Parameters During Alarms and Warnings
- Alarms and Warnings Spelled Out (No Alarm Codes)

CONFIGURABLE OPTIONS

ENGINE SYSTEM

- Block Heater
- Oil Heater
- Level 1 Fan and Belt Guards (Enclosed Units Only)
- Heavy Duty Air Cleaner
- Radiator Stone Guard
- Air Filter Restriction Indicator

FUEL SYSTEM

- NPT Flexible Fuel Line

ELECTRICAL SYSTEM

- 10A UL Listed Battery Charger
- Battery Warmer

ALTERNATOR SYSTEM

- Alternator Upsizing
- Anti-Condensation Heater
- Tropical Coating

CIRCUIT BREAKER OPTIONS

- Main Line Circuit Breaker
- 2nd Main Line Circuit Breaker
- Shunt Trip and Auxiliary Contact
- Electronic Trip Breakers

GENERATOR SET

- Extended Factory Testing
- IBC Seismic Certification
- 12 Position Load Center
- Spring Vibration Isolators

ENCLOSURE

- Weather Protected Enclosure
- Level 1 Sound Attenuated
- Level 2 Sound Attenuated
- Level 2 Sound Attenuated with Motorized Dampers
- Steel Enclosure
- Aluminum Enclosure
- Door Open Alarm Horn
- Up to 200 MPH Wind Load Rating (Contact Factory for Availability)
- AC/DC Enclosure Lighting Kit
- Enclosure Heater (with Motorized Dampers Only)

FUEL TANKS (Size on Last Page)

- 8 in (203.2 mm) Fill Extension
- 13 in (330.2 mm) Fill Extension
- 19 in (482.6 mm) Fill Extension

CONTROL SYSTEM

- NFPA 110 Compliant 21-Light Remote Annunciator
- Remote Relay Assembly (8 or 16)
- Oil Temperature Sender with Indication Alarm
- Remote E-Stop (Break Glass-Type, Surface Mount)
- Remote E-Stop (Red Mushroom-Type, Surface Mount)
- Remote E-Stop (Red Mushroom-Type, Flush Mount)
- 100 dB Alarm Horn
- Ground Fault Annunciator
- 120 V GFCI and 240 Outlet
- Flush Mount Annunciator Kit
- Remote Communication - Modem
- 10A Engine Run Relay
- Damper Alarm Contacts (with Motorized Dampers Only)

WARRANTY

- 2 Year Extended Limited Warranty
- 5 Year Limited Warranty
- 5 Year Extended Limited Warranty
- 7 Year Extended Limited Warranty
- 10 Year Extended Limited Warranty

ENGINEERED OPTIONS

ENGINE SYSTEM

- Coolant Heater Ball Valves
- Fluid Containment Pan

CONTROL SYSTEM

- Spare Inputs (x4) / Outputs (x4)
- Battery Disconnect Switch

ALTERNATOR SYSTEM

- 3rd Breaker System

GENERATOR SET

- Special Testing

FUEL TANKS

- Overfill Protection Valve
- UL2085 Tank
- Special Fuel Tanks
- Vent Extensions

SD275 | 10.3L | 275 kW

INDUSTRIAL DIESEL GENERATOR SET

EPA Certified Stationary Emergency

GENERAC® INDUSTRIAL POWER

APPLICATION AND ENGINEERING DATA

ENGINE SPECIFICATIONS

General

Make	Iveco/FPT
EPA Emissions Compliance	Stationary Emergency
EPA Emissions Reference	See Emission Data Sheet
Cylinder #	6
Type	In-Line
Displacement - in^3 (L)	628.54 (10.3)
Bore - in (mm)	4.92 (125)
Stroke - in (mm)	5.51 (140)
Compression Ratio	16.5:1
Intake Air Method	Turbocharged/Aftercooled
Cylinder Head	4-Valve
Piston Type	Aluminum
Crankshaft Type	Dropped Forged Steel

Engine Governing

Governor	Electronic Isochronous
Frequency Regulation (Steady State)	±0.25%

Lubrication System

Oil Pump Type	Gear
Oil Filter Type	Full Flow
Crankcase Capacity - qt (L)	31.68 (30)

Cooling System

Cooling System Type	Closed Recovery
Water Pump Type	Pre-Lubed, Self Sealing
Fan Type	Pusher
Fan Speed - RPM	2,250
Fan Diameter - in (mm)	30 (762)

Fuel System

Fuel Type	Ultra Low Sulfur Diesel Fuel #2
Fuel Specifications	ASTM
Fuel Filtering (Microns)	5
Fuel Inject Pump	Electronic
Fuel Pump Type	Engine Driven Gear
Injector Type	Common Rail
Engine Type	Direct Injection
Fuel Supply Line - in (mm)	0.5 (12.7) NPT
Fuel Return Line - in (mm)	0.5 (12.7) NPT

Engine Electrical System

System Voltage	24 VDC
Battery Charger Alternator	Standard
Battery Size	See Battery Index 0161970SBY
Battery Voltage	(2)-12 VDC
Ground Polarity	Negative

ALTERNATOR SPECIFICATIONS

Standard Model	K0275124Y21
Poles	4
Field Type	Revolving
Insulation Class - Rotor	H
Insulation Class - Stator	H
Total Harmonic Distortion	<5%
Telephone Interference Factor (TIF)	<50

Standard Excitation	Permanent Magnet
Bearings	Single Sealed Cartridge
Coupling	Direct via Flexible Disc
Prototype Short Circuit Test	Yes
Voltage Regulator Type	Digital
Number of Sensed Phases	All
Regulation Accuracy (Steady State)	±0.25%

SD275 | 10.3L | 275 kW

INDUSTRIAL DIESEL GENERATOR SET

EPA Certified Stationary Emergency

GENERAC® INDUSTRIAL POWER

OPERATING DATA

POWER RATINGS

		Standby
Three-Phase 120/208 VAC @0.8pf	275 kW	Amps: 954
Three-Phase 120/240 VAC @0.8pf	275 kW	Amps: 827
Three-Phase 277/480 VAC @0.8pf	275 kW	Amps: 414
Three-Phase 346/600 VAC @0.8pf	275 kW	Amps: 331

MOTOR STARTING CAPABILITIES (skVA)

SkVA vs. Voltage Dip

277/480 VAC	30%	208/240 VAC	30%
K0275124Y21	790	K0275124Y21	609
K0350124Y21	1,001	K0350124Y21	801
K0400124Y21	953	K0400124Y21	717

FUEL CONSUMPTION RATES*

Fuel Pump Lift - ft (m)
3 (1)

Total Fuel Pump Flow (Combustion + Return) - gph (Lph)
31 (117)

Diesel - gph (Lph)

Percent Load	Standby
25%	6.8 (25.7)
50%	11.7 (44.2)
75%	15.8 (59.8)
100%	19.6 (74.2)

* Fuel supply installation must accommodate fuel consumption rates at 100% load.

COOLING

		Standby
Coolant Flow	gpm (Lpm)	95 (360)
Coolant System Capacity	gal (L)	13.0 (49.2)
Heat Rejection to Coolant	BTU/hr (kW)	722,612 (211.8)
Inlet Air	cfm (m^3/hr)	14,505 (411)
Maximum Operating Radiator Air Temperature	°F (°C)	110 (43.3)
Maximum Ambient Temperature (Before Derate)		See Bulletin No. 0199280SSD
Maximum Additional Radiator Backpressure	in H_2O (kPa)	0.5 (0.12)

COMBUSTION AIR REQUIREMENTS

	Standby
Flow at Rated Power - cfm (m^3/min)	780 (22.1)

ENGINE

		Standby
Rated Engine Speed	RPM	1,800
Horsepower at Rated kW**	hp	449
Piston Speed	ft/min (m/min)	1,654 (504)
BMEP	psi (kPa)	308 (2,124)

EXHAUST

		Standby
Exhaust Flow (Rated Output)	cfm (m^3/min)	2,050 (58.1)
Maximum Allowable Backpressure	inHg (kPa)	1.5 (5.1)
Exhaust Temperature (Rated Output)	°F (°C)	950 (510)

** Refer to "Emissions Data Sheet" for maximum bHP for EPA and SCAQMD permitting purposes.

Deration – Operational characteristics consider maximum ambient conditions. Derate factors may apply under atypical site conditions.
Please contact a Generac Power Systems Industrial Dealer for additional details. All performance ratings in accordance with ISO3046, BS5514, ISO8528, and DIN6271 standards.
Standby - See Bulletin 10000018933
Prime - See Bulletin 10000018926

DIMENSIONS AND WEIGHTS*

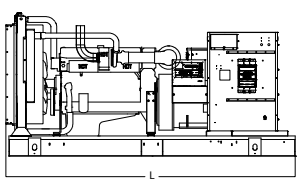

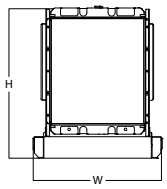

OPEN SET

Run Time - Hours	Usable Capacity - Gal (L)	L x W x H - in (mm)	Weight - lbs (kg)
No Tank	-	137.5 (3,493) x 57.6 (1,463) x 67.8 (1,722)	6,121 - 7,457 (2,776 - 3,382)
9	183 (693)	137.5 (3,493) x 57.6 (1,463) x 80.8 (2,052)	7,069 - 8,405 (3,206 - 3,812)
22	438 (1,659)	137.5 (3,493) x 57.6 (1,463) x 92.8 (2,357)	7,381 - 8,717 (3,348 - 3,954)
35	693 (2,624)	137.5 (3,493) x 57.6 (1,463) x 104.8 (2,662)	7,717 - 9,053 (3,500 - 4,106)
48	946 (3,581)	208.3 (5,220) x 57.6 (1,463) x 122.0 (3,100)	9,146 - 10,482 (4,148 - 4,754)
67	1,325 (5,015)	277.8 (7,055) x 57.6 (1,463) x 120.9 (3,072)	10,161 - 11,497 (4,659 - 5,265)

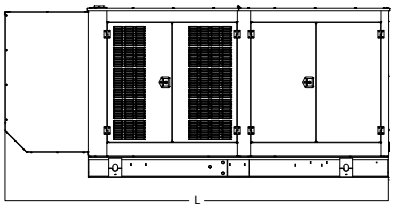

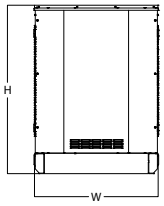

WEATHER PROTECTED ENCLOSURE

Run Time - Hours	Usable Capacity - Gal (L)	L x W x H - in (mm)	Weight - lbs (kg) Enclosure Only	
			Steel	Aluminum
No Tank	-	174.7 (4,437) x 53.0 (1,346) x 77.8 (1,977)	1,521 (690)	727 (330)
9	183 (693)	174.7 (4,437) x 53.0 (1,346) x 90.8 (2,307)		
22	438 (1,659)	174.7 (4,437) x 53.0 (1,346) x 102.8 (2,612)		
35	693 (2,624)	174.7 (4,437) x 53.0 (1,346) x 114.8 (2,917)		
48	946 (3,581)	208.3 (5,220) x 53.0 (1,346) x 132.0 (3,355)		
67	1,325 (5,015)	277.8 (7,055) x 53.0 (1,346) x 130.9 (3,327)		

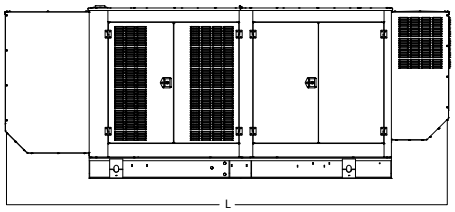

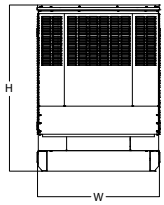

LEVEL 1 SOUND ATTENUATED ENCLOSURE

Run Time - Hours	Usable Capacity - Gal (L)	L x W x H - in (mm)	Weight - lbs (kg) Enclosure Only	
			Steel	Aluminum
No Tank	-	200.2 (5,084) x 57.5 (1,460) x 90.8 (2,306)	1,984 (900)	926 (421)
9	183 (693)	200.2 (5,084) x 57.5 (1,460) x 90.8 (2,306)		
22	438 (1,659)	200.2 (5,084) x 57.5 (1,460) x 102.8 (2,611)		
35	693 (2,624)	200.2 (5,084) x 57.5 (1,460) x 114.8 (2,916)		
48	946 (3,581)	200.2 (5,084) x 57.5 (1,460) x 132.0 (3,354)		
67	1,325 (5,015)	277.8 (7,055) x 57.5 (1,460) x 130.9 (3,326)		

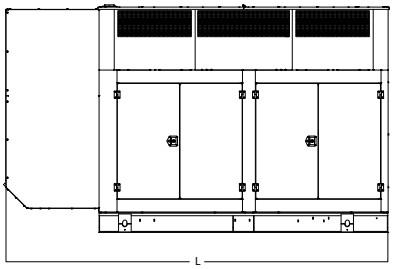

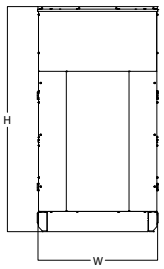

LEVEL 2 SOUND ATTENUATED ENCLOSURE

Run Time - Hours	Usable Capacity - Gal (L)	L x W x H - in (mm)	Weight - lbs (kg) Enclosure Only	
			Steel	Aluminum
No Tank	-	180.7 (4,588) x 57.5 (1,460) x 107.3 (2,725)	2,557 (1,160)	1,173 (531)
9	183 (693)	180.7 (4,588) x 57.5 (1,460) x 120.3 (3,055)		
22	438 (1,659)	180.7 (4,588) x 57.5 (1,460) x 132.3 (3,360)		
35	693 (2,624)	180.7 (4,588) x 57.5 (1,460) x 144.3 (3,665)		
48	946 (3,581)	180.7 (4,588) x 57.5 (1,460) x 161.5 (4,103)		
67	1,325 (5,015)	277.8 (7,055) x 57.5 (1,460) x 160.4 (4,075)		

* All measurements are approximate and for estimation purposes only. Specification characteristics may change without notice. Please contact a Generac Power Systems Industrial Dealer for detailed installation drawings.

P: (262) 544-4811 ©2021 Generac Power Systems, Inc. All rights reserved. All specifications are subject to change without notice.

ENGINE RUN RELAY

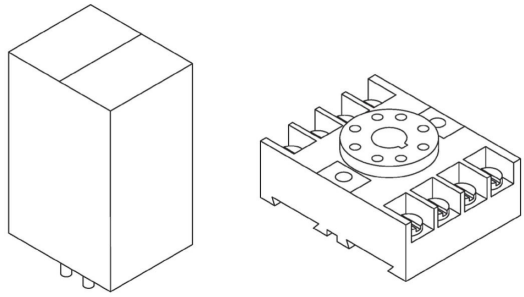

- For use with Generac's Digital Control Platforms
- 10 Amp Contact Rating
- 12 or 24 Volt DC Input
- Contact Open or Closure on Engine Run

Contacts	
Type	DPDT
Material	Silver
Rating	UL 10A @ 240VAC 10A @ 30VDC
Coils	
Input Voltage	24VDC
Resistance	400 Ohms
Nominal Power	1.5W

Wiring Diagram with E panel, H-100 Panel

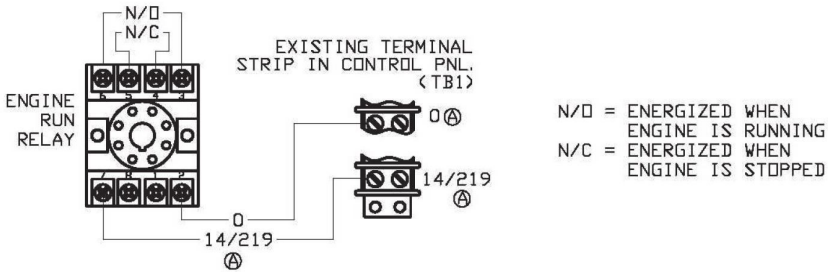

Wiring Diagram with PMDCP

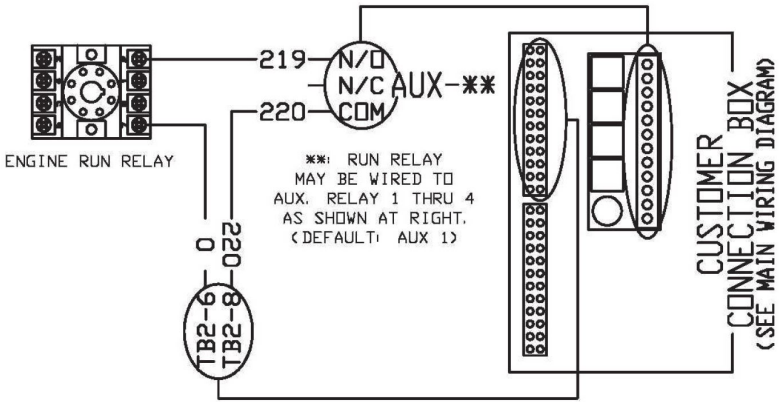

Wiring Diagram with Power Zone Pro Sync

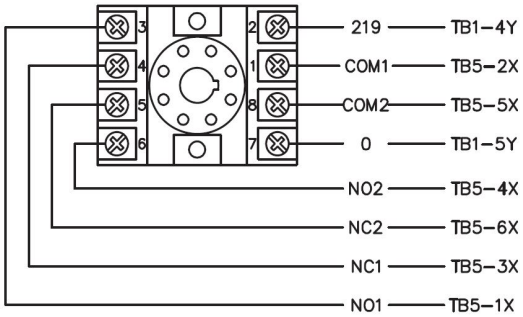

TB5

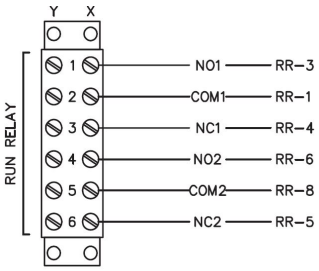

Pin Detail

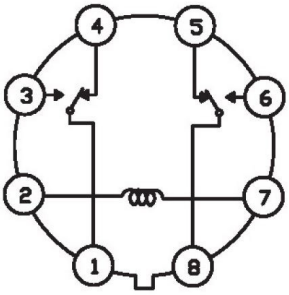

Generac Power Systems, Inc. | P.O. Box 8 | Waukesha, WI 53187
P: (262) 544-4811 © 2019 Generac Power Systems, Inc. All rights reserved. All specifications are subject to change without notice.

H-100 CONTROL PANEL

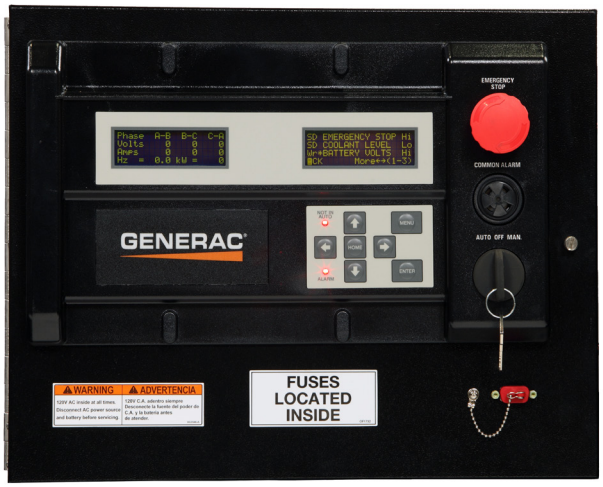

The Quiet-Test™ H-100 Control Panel is a digital microprocessor electronic controller that integrates all engine and transfer switch functions into a single control system.

- Digital Controls for All Saftey Shutdowns
- Isochronous Governor Control
- Digital 3 Phase Sensing Voltage Regulator
- Sealed Digital Circuit Board
- Mates with HTS Transfer Switch and Any 2-wire Start ATS
- Alarm and Event Logging
- Built-in Diagnostics
- Internal PLC

Features

- Two 4-line x 20 Displays
- Full System Status
- 3 Phase Sensing Digital Voltage Regulator
- Remote Ports
  - RS-232
  - RS-485
  - CANbus
- Waterproof Connections
- Built -in PLC
- Full Range Standby Operation
- Full System Status
  - 3 Phase AC Volts
  - 3 Phase Amps
  - kW
  - Power Factor
  - Reactive Power
  - Oil Pressure
  - Water Temperature
  - Water Level
  - Oil Temperature (Optional)
  - Fuel Pressure
  - Engine Speed
  - Battery Voltage
  - Alternator Frequency
  - Time
  - Date
  - Transfer Switch Status
  - Run Hours
  - Service Reminders
  - Trending
  - Fault History (Alarm Log)
  - I^2T Function for Full Generator Protection
- Remote Communications
- Programmable Auto Crank
- Shutdowns
  - Overvoltage
  - Overspeed
  - Low Oil Pressure
  - High Coolant Temperature
  - Low Coolant Level
- Emergency Stop
- On/Off/Manual Switch
- Not in Auto Flashing Light
- Audible Alarm for Fault Condition
- Transfer Switch Logic Communicates with HTS Transfer Switch
- Selectable Low Speed Exercise
- Temperature Range: -40° to +70°C

Codes and Standards
- UL 508
- Configurable to NFPA 110, Level 1 or 2

The generator set parameters can be manipulated and monitored without standing in front of the control panel with GenLink® software. The Generac H-100 control panel also wmonitors and controls transfer switch functions when used with the HTS transfer switch.
- Monitors Utility Voltage
- Monitors Generator Voltage
- Timer for Line Interrupt Delay
- Timer for Engine Warmup
- Timer for Minimum Engine Run Time
- Timer for Return to Utility Position
- Timer for Engine Cooldown
- Built-in Exerciser Timer (7 Day)
- Additional 2-wire Start Controls for Any 2-wire Transfer Switch

H-100 CONTROL PANEL

Typical Control Connection

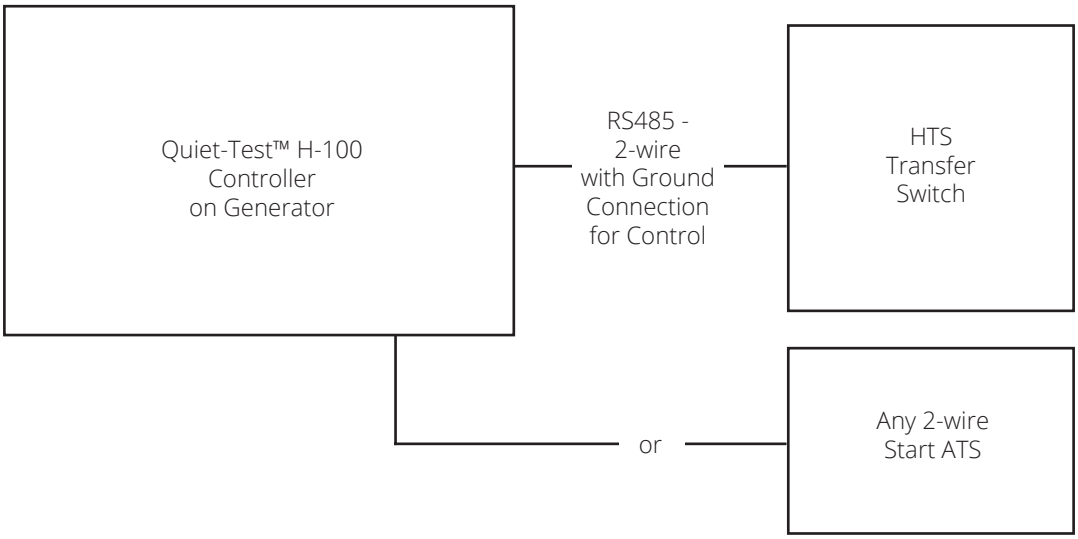

 © 2023 Generac Power Systems, Inc. All rights reserved. All specifications are subject to change without notice.

ALTERNATOR DATA SHEET
K0300124Y21

General Characteristics

Voltages (V)	208/240, 480	Number of Leads	12
Frequency (Hz)	60	Winding Type	Reconnectable
Phases	3	Air Flow (CFM)	Consult Factory
Speed (RPM)	1,800	Total Harmonic Distortion (%)	<5
Excitation System	PMG	Largest Single Harmonic Value (%)	<3.5
Insulation Class	H	Telephone Interference Factor (TIF)	<50
Winding Pitch	2/3	Reference Part Number	0L3719E01R

Ratings at 0.8 pf based on 40°C Ambient

Voltage (V)	80°C Rise		105°C Rise		120°C Rise		150°C Rise	
	kW	kVA	kW	kVA	kW	kVA	kW	kVA
208/240	228	285	273	341	300	375	321	401
480	228	285	273	341	300	375	321	401

Base Data at 480V, 375 kVA, 1,800 RPM, 60 Hz, 3Ø

Description	Value
Stator Resistance, Line to Line, High Wye Connection (Ω)	0.0077
Rotor Resistance (Ω)	1.3600
Exciter Stator Resistance - PMG (Ω)	7.5900
Exciter Rotor Resistance - PMG (Ω)	0.3300
Excitation Winding Resistance - PMG (Ω)	1.0555
Xd, Direct Axis Synchronous Reactance (p.u.)	3.360
X2, Negative Sequence Reactance (p.u.)	0.210
X0, Zero Sequence Reactance (p.u.)	0.080
X'd, Direct Axis Transient Reactance (p.u.)	0.170
X"d, Direct Axis Subtransient Reactance (p.u.)	0.150
Xq, Quadrature Axis Synchronous Reactance (p.u.)	1.610
T'd, Direct Axis Transient Short Circuit Time Constant (s)	0.109

Description	Value
T"d, Direct Axis Subtransient Short Circuit Time Constant (s)	0.016
T'do, Direct Axis Transient Open Circuit Time Constant (s)	2.660
Ta, Short Circuit Time Constant of Armature Winding (s)	0.034
Phase Sequence CCW-NDE	T1, T2, T3
Voltage Balance, L-L or L-N (%)	2.5
Deviation Factor (%)	< 7
High Wye Connection, Sustained 3Ø Short Circuit Current (%) - PMG	300
X/R	13
Short Circuit Ratio	0.53
Heat Rejection (BTU/hr) - 100% Rated Load, 480V, 0.8pf, 120°C Temperature Rise	109,959

Reference: Mil-STD-705B
All Ratings are Nominal

ALTERNATOR DATA SHEET
K0300124Y21

skVA

	10%	15%	20%	25%	30%	35%
480V @ 0.3PF	192	291	413	544	714	884
480V @ 0.6PF	218	337	469	614	790	966
208/240V @ 0.3PF	139	218	308	413	540	661
208/240V @ 0.6PF	161	255	355	466	609	730

Efficiencies

*Rated Power	480V @ 0.8 PF	480V @ 1.0 PF	208/240V @ 0.8PF	208/240V @ 1.0 PF
20%	82.3	83.2	84.9	85.6
40%	87.7	89.1	89.0	90.3
60%	89.9	91.9	90.5	92.2
80%	90.4	92.9	90.4	92.7
100%	90.3	92.3	89.8	92.5

*Rated Power value is rating kW at 120°C Winding Temperature Rise and 0.8pf

LOG LOG Decrement Curve

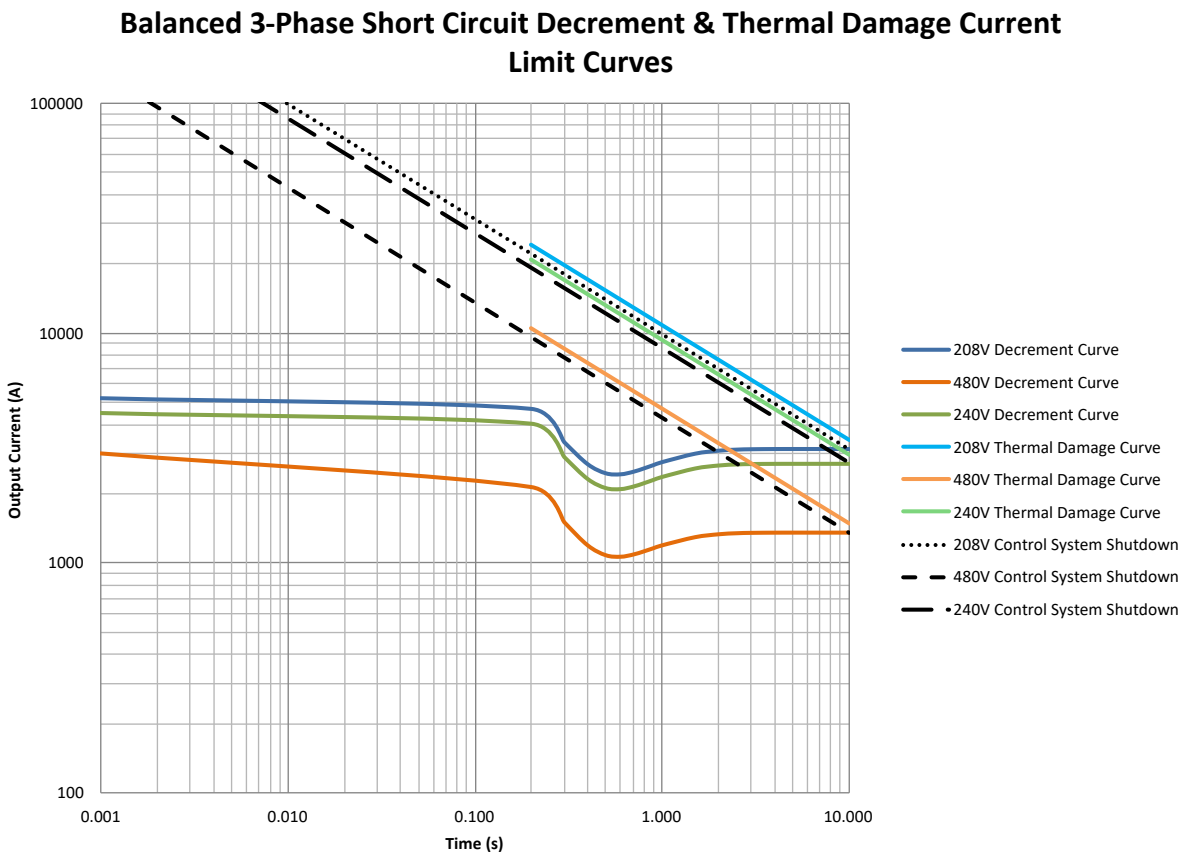

Generac Power Systems, Inc. | P.O. Box 8 | Waukesha, WI 53187
P: (262) 544-4811 © 2021 Generac Power Systems, Inc. All rights reserved. All specifications are subject to change without notice.

GENprotect ™
Seamless Protection for Industrial Power Generators

GENprotect Operation

The design choice of an onsite power system using a Generac Industrial Power Generator assures your emergency power source is protected from unexpected power distribution faults. Typically, a generator will include some type of over-current device, such as a circuit breaker, or be protected by inherent design with the controller protecting the alternator through a protection algorithm. Generac's GENprotect generator protection system monitors the system current output and protects the alternator with extended security against fault scenarios that could occur within the site's downstream distribution system.

It is a common misconception that the alternator's main circuit breaker protects the alternator from a short circuit event. The main output breaker protects the cabling and provides a convenient disconnect. The characteristic trip curve for the industry standard thermal magnetic breaker (MCCB, molded case thermal magnetic or solid state) does not coordinate with the thermal damage limitation for an on-site generator. If circuit breakers are used for generator protection, a solid-state circuit breaker with full adjustments (Long Time, Short Time and Instantaneous, LSI) is required to coordinate the breaker protection curve within the generator thermal damage curve. Historically, this limitation was often accepted in system design since failures of the main generator feeder are extremely rare. Most short circuit events happen at a branch circuit, equipment level, where the fault is easily cleared by the smaller down stream breakers.

Given the mission critical nature of today's back-up power applications, it is more desirable to protect the system against even relatively rare failure modes. As generator controllers have become more powerful it is feasible for manufactures to supply coordinated short circuit protection integral to the generator control system, negating the need for a main-line circuit breaker.

Generac's GENprotect alternator protection algorithm monitors the generator output. If this monitoring senses short circuit current in excess of rated amps, GENprotect steps in to provide a controlled and safe approach to breaker coordination and alternator protection. GENprotect first limits the alternator short circuit current level to 300%. By limiting the available fault current, GENprotect extends the time the alternator can maintain fault current resulting in consistent breaker coordination. Without this functionality a line to neutral fault may be at 800% of rated current and need to be cleared within 1.4 seconds. The second function GENprotect performs is I2T thermal protection for the alternator. Since a short circuit event can heat the alternator so rapidly, it is not possible to protect the alternator by monitoring temperature. Instead GENprotect calculates the heat energy of the fault current. When this energy reaches the limits of NEMA MG1, GENprotect trips the generator off-line. This configuration ensures the alternator is protected and the power system is ensured 10 seconds of 300% fault current for breaker coordination.

DESCRIPTION

- GENprotect is an alternator protection algorithm approved by UL.
- Protects alternator from damage due to shorts and electrical faults.
- Provides breaker coordination and alternator protection.
- Allows for use of multiple circuit breaker choices, including "no" breaker.

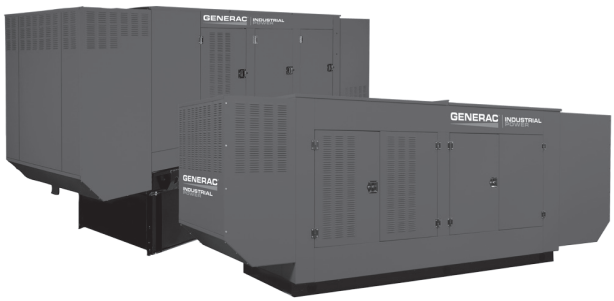

GENprotect ™
Seamless Protection for Industrial Power Generators

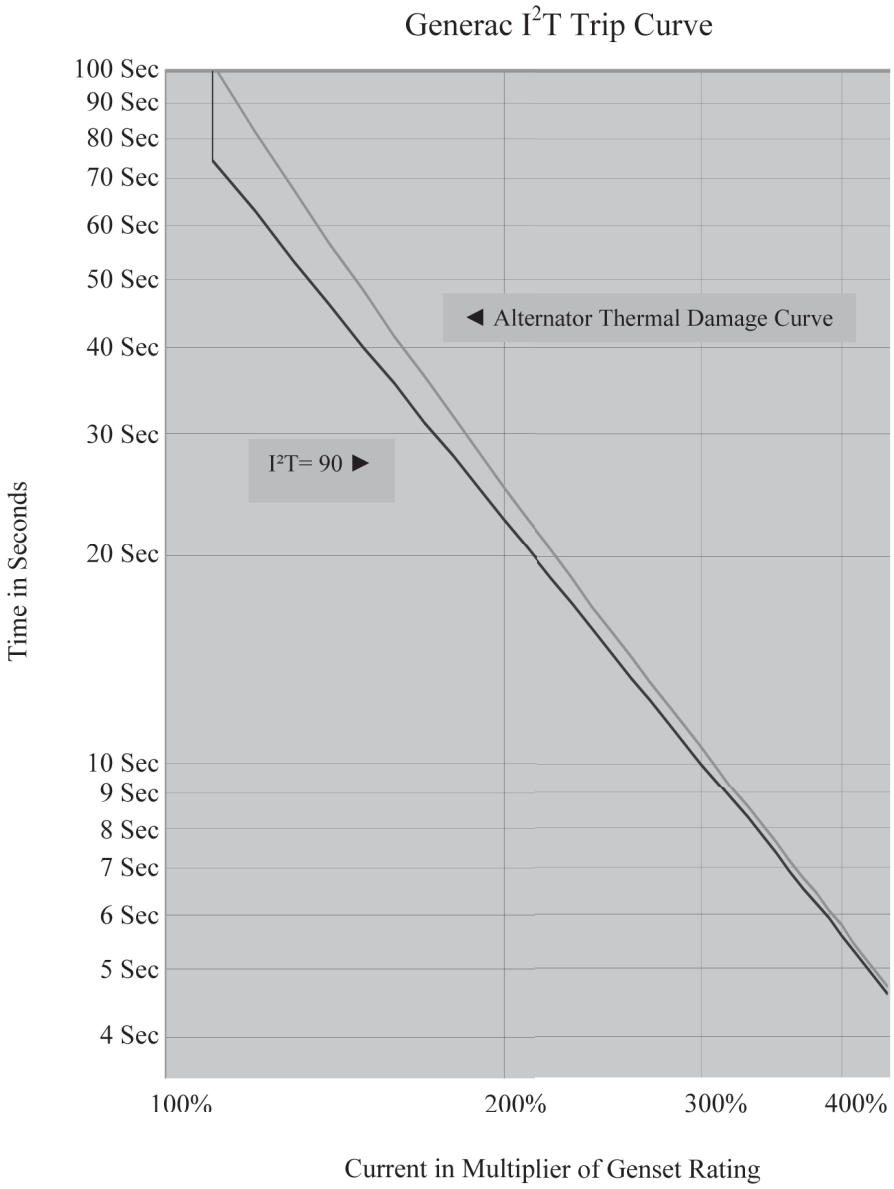

The above Figure shows the Generac GENprotect thermal protection curve for use in protection and coordination studies. The alternator Thermal Damage Curve is shown just to the right of the GENprotect protection curve. If the alternator load is greater than the thermal damage protection curve for the alternator, the generator set will trip off-line. For example, an overload current of 110% for 75 seconds causes an overload alarm and will trip the generator off-line, shutting down the engine. GENprotect will provide generator protection over a full range of time and current, from instantaneous faults to overloads lasting several minutes. An advantage of GENprotect over a MCCB is that GENprotect allows for downstream breakers to clear faults without tripping the generator off-line, providing selective coordination with the first level of downstream breakers.

 © 2019 Generac Power Systems, Inc. All rights reserved. All specifications are subject to change without notice.

INDUSTRIAL GENSET - BATTERY INDEX

• Warranty by Exide Corp. • Exide e-mail: tbgna@exide.com • 800-782-7848 National Hot line

INDUSTRIAL SPARK-IGNITED GENSETS - AVAILABLE BATTERIES

			GENERAC PART #					
Engine	System Voltage	Battery Quantity	058208 (Group 24F)	077483 (Group 26)	058665 (Group 27F)	061119 (Group 31)	061104 (Group 8D)	BT0015A02 (Group 8D)
G2.4	12	1		X				
G4.5	12	1			X	X		
G9.0	12	1			X	X		
G14.2	24	2					X	
G21.9	24	2					X	
G25.8	24	2					X	
G33.9	24	4					X	
G49.0	24	4					X	X

INDUSTRIAL DIESEL GENSETS - AVAILABLE BATTERIES

			GENERAC PART #			
Engine	System Voltage	Battery Quantity	058665 (Group 27F)	061119 (Group 31)	061104/BT0015A00 (Group 8D)	BT0015A02 (Group 8D)
D2.2 Perkins	12	1	X	X		
D3.3 Perkins	12	1		X		
D4.5 FPT	12	1		X		
D6.7 FPT 100, 130kW	12	1 or 2†		X		
D6.7 FPT 150, 175kW	12	2†		X		
D8.7 FPT	24	2		X		
D10.3 FPT	24	2		X	X	
D12.9 FPT	24	2		X	X	
D12.5 Perkins	24	2			X	
D15.2 Perkins	24	2			X	
D16.0 Volvo	24	2		X	X	
D18.1 Perkins	24	2			X	
D30.6 Perkins	24	2			X	X
D33.9 MHI	24	2			X	X
D37.1 MHI	24	4			X	X
D49.0 MHI	24	4			X	X
D65.4 MHI	24	4			X	X

			DIMENSIONS (in) NOMINAL		
Part Number	Group Number*	Nominal CCA @ 0° F	L	W	H
058208	24F	525	6.75	10.63	9.00
077483	26	525	6.75	8.25	7.75
058665	27F	700	6.75	12.50	9.00
061119	31	925	6.75	13.00	9.40
061104/ BT0015A00	8D	1,200	11.00	20.80	10.00
BT0015A02	8D	1,400	11.00	20.80	10.00

All batteries are 12V, 6 cell construction, lead calcium type.
For 24V systems, batteries are wired in series.

X Battery available with electrolyte and installed in genset.
† Single or dual-paralleled battery options are available on 100 and 130kW. Single-battery option not available on 150 and 175kW.
* BCI Group Size reference.

 © 2022 Generac Power Systems, Inc. All rights reserved. All specifications are subject to change without notice.

GENERATOR ENCLOSURES

DESCRIPTION

GENERAC POWER SYSTEMS' generator enclosures provide year-round weather protection for your power equipment. Engineered with functionality and value in mind, the enclosure design benefits are unique in that the enclosures utilize dimensionally matched components for either a weather protective configuration or a sound attenuated/acoustic configuration. With common components used between design, modification and on-site upgrades can be accomplished with ease.

The enclosure design offers several benefits over the "standard enclosures" of other manufacturers. Generac's enclosures have been created with the goal of maximizing the customer's product performance satisfaction while maintaining the functionality of reducing exterior noise levels and discouraging product tampering.

Although others may require a "premium" for a self-enclosed exhaust system, rugged steel panel construction or protective polyethylene washers under all exterior panel fasteners, Generac includes these and several other features on every enclosure configuration. Be sure to compare. Generac Enclosures offer additional design enhancement extras that other "standard enclosures" do not.

GENERATOR ENCLOSURES

Post-Free Twin Doors
Provide Large, Unobstructed Service Access

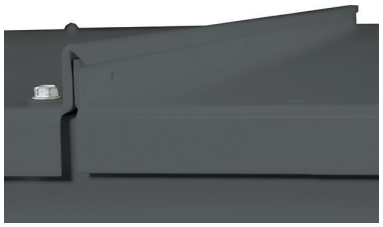

Gasket-Free, Interconnected Roof Panel Joint
Drip-Free, Maintenance-Free

Heavy Gauge, Stainless Steel, Partial Pin Hinges with Nylon Spacers
Durable, Corrosion-Free, Removable Doors

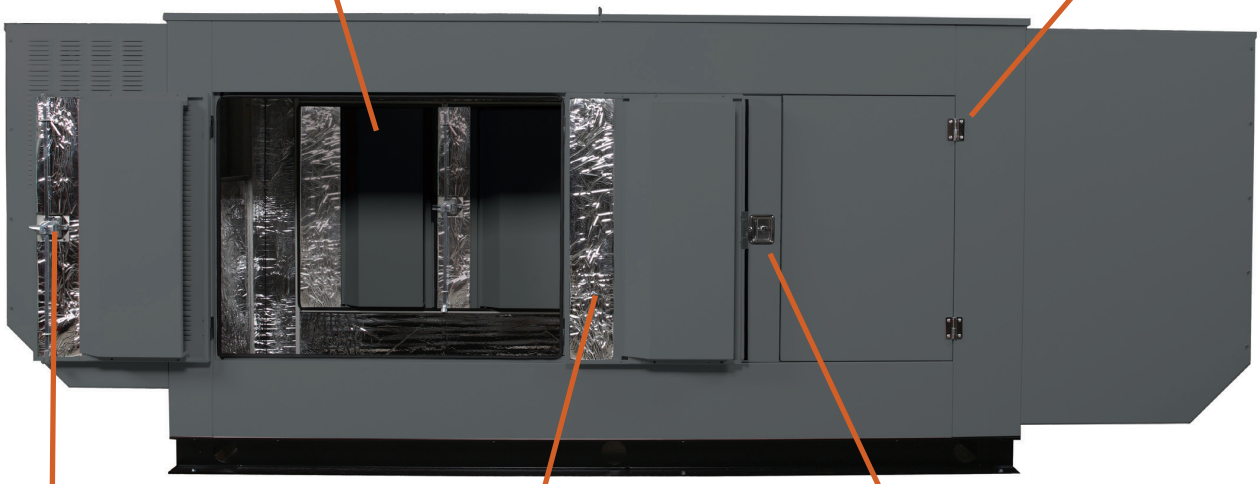

Two-Point Door Latch System
Ensures Proper Seal Preventing Water Ingress and Sound Egress

Dense, Closed-Cell Foam Insulation with Reflective Silver Mylar Layer
Improved Sound Attenuation Without Damaging Effects From Radiant Heat Exposure

Lockable Turn and Tuck Stainless Steel Latch Handle
Corrosion-Free, Non-Protruding and Secure

GENERATOR ENCLOSURES

FEATURES:	BENEFITS:
Dimensional matching of acoustic and non-acoustic enclosure designs	Reduces variation in fuel tank pricing, inventory; removes need to change out fuel tank or retrofit
Standardized enclosure components *	Ease of retrofit or upgrade to acoustic system; reduced parts inventory, costs
Enclosure mounted directly to unit baseframe	Simplified delivery and installation with enclosure and unit in single component design
Electrostatically painted panels	Maximum protection from weather elements
12 or 14 gauge steel based on kW rating	Maximum sound attenuation, protection and product life
Aluminum Enclosure optional	Prevents corrosion in coastal regions
Stainless steel door latch and hinge hardware	Provides extended component life; maximum protection against rusting
Stainless steel door latch strike plate	Maximum protection against enclosure paint damage from door latch pin
Door hinges utilize slip-pin design	Provides quick door removal for full-unit access
Polyethylene gasketing under door hinges	Additional protection for enclosure paint finish
Keyed door latches	Protection for equipment and personnel
Large removable access doors	Ease of maintenance
Relocation of access doors	Provides improved access to MLCB on all units
Redesigned door gasketing	Improved sealing quality from sound and weather elements
Weather resistant aluminum roof design with drip ledge	Provides optimum moisture/rain runoff from unit
Cabled and gasketed radiator access cover	Provides improved radiator access and additional protection from weather elements
Acoustic roof panels manufactured with mechanical retention pins	Increased acoustic foam retention within unit
Polyethylene washers under all panel fasteners	Additional paint finish protection from stainless steel fastener
Internally fastened enclosure panels (where possible)	Provides streamlined unit appearance
Additional roof panel stiffener	Added overall compartment rigidity and acoustic foam panel retention
Self-enclosed exhaust system	Provides safe unit operation; no enclosure hot spots; streamlined unit appearance
Discharge air duct has been designed with minimal fasteners	Ease of removal and access to exhaust system
Stainless steel exhaust band clamps	Provides extended component life; ensures proper exhaust seal
Drain holes within air ducts	Enables maximum water run-off
Rodent-proof, tamper proof enclosure design	Safety and security for personnel and equipment
Redesigned baseframe lifting lugs	Ease of unit relocation; prevents compartment damage from lifting straps
Up to 200 MPH wind kit options (Contact Factory for Availability)	Meets locally enforced wind requirements

* Consult Generac Power Systems, Inc. for installation drawings for specific configurations and dimensions.

 © 2016 Generac Power Systems, Inc. All rights reserved. All specifications are subject to change without notice.

RhinoCoat™

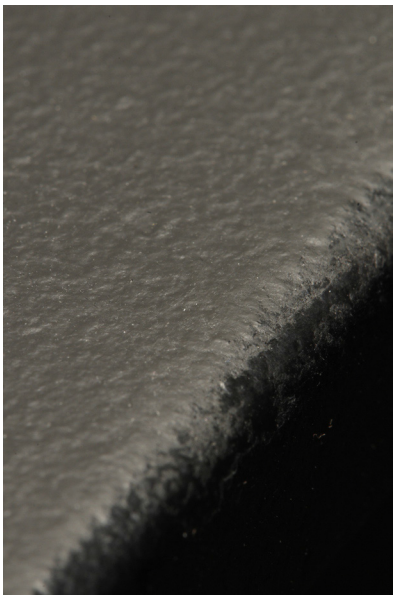

Generac's RhinoCoat™ finish system provides superior durability as a standard for all Generac Industrial enclosures, tanks and frames.*

Testing Standards

Generac's RhinoCoat™ finished surfaces are subjected to numerous tests. These include:

- ASTM D - 1186 - 87.....2.5+ MIL Paint Thickness
- ASTM D - 3363 - 92a.....Adequate Material Hardness
- ASTM D 522 - B.....Resistant to Cracking
- ASTM D 3359 - B.....Exceptional Adhesion
- ASTM B117 D 1654.....Resistant to Salt Water Corrosion
- ASTM D1735 D 1654.....Resistant to Humidity
- ASTM 2794 93 (2004).....Exceptional Impact Resistance
- SAEJ1690 - UV Specifications.....UV Protection

In addition to the testing standards above, Generac adds the following test requirements more specific to generator applications:

- Resistant to Typical Oils
- Resistant to Typical Fuels
- Resistant to Typical Antifreeze
- Resistant to Distilled Water

Primary Codes and Standards

*RhinoCoat™ powder coat paint is durable and corrosion resistant however it is not a rust preventative. Generac pretreats all powder coated parts to assist with resistance to corrosion.

 © 2019 Generac Power Systems, Inc. All rights reserved. All specifications are subject to change without notice.

EATON CIRCUIT BREAKER DATA
Standard (80% Rated) Thermal-Magnetic

AMPS	VOLTS	ACCESSORIES	EATON PART NUMBER	SERIES	FRAME	GENERAC PART NUMBER
15	600	No Accessories	FG3015	C	F-Frame	0H9294TA00
		Shunt Trip and Aux. Contacts	FG3015A12S03			0H9294TAB0
20		No Accessories	FG3020			0H9295TA00
		Shunt Trip and Aux. Contacts	FG3020A12S03			0H9295TAB0
25		No Accessories	FG3025			0J0248TA00
		Shunt Trip and Aux. Contacts	FG3025A12S03			0J0248TAB0
30		No Accessories	FG3030			0H9296TA00
		Shunt Trip and Aux. Contacts	FG3030A12S03			0H9296TAB0
35		No Accessories	FG3035			0H9297TA00
		Shunt Trip and Aux. Contacts	FG3035A12S03			0H9297TAB0
40		No Accessories	FG3040			0H9298TA00
		Shunt Trip and Aux. Contacts	FG3040A12S03			0H9298TAB0
45		No Accessories	FG3045			0H9299TA00
		Shunt Trip and Aux. Contacts	FG3045A12S03			0H9299TAB0
50		No Accessories	FG3050			0H9300TA00
		Shunt Trip and Aux. Contacts	FG3050A12S03			0H9300TAB0
60		No Accessories	FG3060			0H9301TA00
		Shunt Trip and Aux. Contacts	FG3060A12S03			0H9301TAB0
70		No Accessories	FG3070			0H9302TA00
		Shunt Trip and Aux. Contacts	FG3070A12S03			0H9302TAB0
80		No Accessories	FG3080			0J0841TA00
		Shunt Trip and Aux. Contacts	FG3080A12S03			0J0841TAB0
90		No Accessories	FG3090			0J0837TA00
		Shunt Trip and Aux. Contacts	FG3090A12S03			0J0837TAB0
100		No Accessories	FG30100			0H9314TA00
		Shunt Trip and Aux. Contacts	FG3100A12S03			0H9314TAB0
125		No Accessories	FG30125			0J0231TA00
		Shunt Trip and Aux. Contacts	FG3125A12S03			0J0231TAB0
150		No Accessories	FG30150			0H9315TA00
		Shunt Trip and Aux. Contacts	FG3150A12S03			0H9315TAB0
175		No Accessories	FG30175			0H9316TA00
		Shunt Trip and Aux. Contacts	FG3175A12S03			0H9316TAB0
200		No Accessories	FG30200			0J0232TA00
		Shunt Trip and Aux. Contacts	FG3200A12S03			0J0232TAB0
225		No Accessories	FG3225			0H9317TA00
		Shunt Trip and Aux. Contacts	FG3225A12S03			0H9317TAB0
250		No Accessories	JG3250		J-Frame	0H9318TA00
		Shunt Trip and Aux. Contacts	JG3250A12S43			0H9318TAB0
300		No Accessories	KG3300		K-Frame	0H9319TA00
		Shunt Trip and Aux. Contacts	KG3300A12S43			0H9319TAB0

EATON CIRCUIT BREAKER DATA
Standard (80% Rated) Thermal-Magnetic

AMPS	VOLTS	ACCESSORIES	EATON PART NUMBER	SERIES	FRAME	GENERAC PART NUMBER
350	600	No Accessories	KG3350	C	K-Frame	0H9320TA00
		Shunt Trip and Aux. Contacts	KG3350A12S43			0H9320TAB0
400		No Accessories	KG3400			0H9321TA00
		Shunt Trip and Aux. Contacts	KG3400A12S43			0H9321TAB0
450		No Accessories	LG3450		L-Frame	0H9322TA00
		Shunt Trip and Aux. Contacts	LG3450A12S03			0H9322TAB0
500		No Accessories	LG3500			0H9323TA00
		Shunt Trip and Aux. Contacts	LG3500A12S03			0H9323TAB0
600		No Accessories	LG3600			0H9324TA00
		Shunt Trip and Aux. Contacts	LG3600A12S03			0H9324TAB0
700		No Accessories	MDL3700		M-Frame	0H9325TA00
		Shunt Trip and Aux. Contacts	MDL3700A06S02			0H9325TAB0
800		No Accessories	MDL3800			0H9326TA00
		Shunt Trip and Aux. Contacts	MDL3800A06S02			0H9326TAB0
900*		No Accessories	NG3900		N-Frame	0H9327TA00
		Shunt Trip and Aux. Contacts	NG3900A12S03			0H9327TAB0
1,000*		No Accessories	NG31000			0H9328TA00
		Shunt Trip and Aux. Contacts	NG31000A12S03			0H9328TAB0
1,200*		No Accessories	NG31200			0H9329TA00
		Shunt Trip and Aux. Contacts	NG31200A12S03			0H9329TAB0
1,400*		No Accessories	RGH316033MY22	G	RG-Frame	0H9360EAN0
		Shunt Trip and Aux. Contacts	RGH316033MA12S21Y22			0H9360EANB
1,600*		No Accessories	RGH316033MY22			0H9361EAN0
		Shunt Trip and Aux. Contacts	RGH316033MA12S21Y22			0H9361EANB
2,000*		No Accessories	RGH320033M			0H9367EAN0
		Shunt Trip and Aux. Contacts	RGH320033MA12S21			0H9367EANB
2,500*		No Accessories	RGH325033M			0H9368EAN0
		Shunt Trip and Aux. Contacts	RGH325033MA12S21			0H9368EANB

*LS-type electronic trip breaker equipped with RMS 310+ trip unit.

 © 2020 Generac Power Systems, Inc. All rights reserved. All specifications are subject to change without notice.

BATTERY CHARGER
2.5 amp and 10 amp

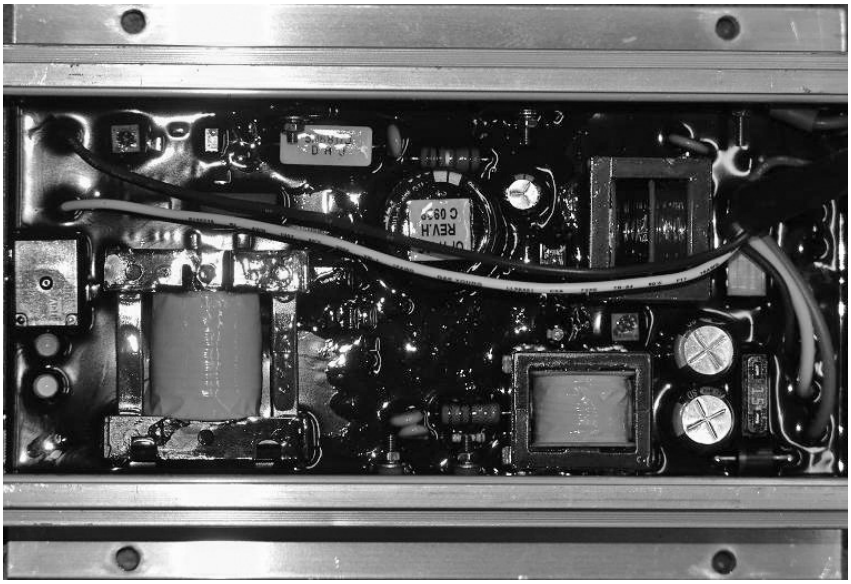

Battery charger shown from inside of control panel enclosure. Connections are made via an attached harness.

The Generac 2.5 amp 12 volt and 10 amp 12/24 volt battery chargers are designed to work with Generac Industrial Controls to provide the ultimate in automatic battery voltage maintenance.

The 2.5 amp charger is self-regulating and produces instantaneous output current adjustments to keep the battery charged to an optimum level. Battery voltage is read on the control panel digital display.

The 10 amp charger has automatic float and equalize control. It precisely monitors the battery's voltage and automatically activates the correct charging mode. The charge rate is limited and controlled to efficiently and safely maintain ideal battery levels under varying conditions.

The equalize system uses a control circuit to limit charging current to 10 amps. When battery voltage drops below a preset level, charging current increases to 5 amps and then to the 10 amp charge rate if needed. When the battery reaches maximum charge, the charger switches to float mode to supply just enough current to maintain the battery at or above 13/26 volts. Battery voltage and charging current are read at the control panel digital display.

Specifications	2.5A	10A
Nominal Input	120 VAC	120 VAC
Operating AC Line Voltage Range	108 to 132 VAC	108 to 132 VAC
Input AC Line Frequency	50/60 Hz	50/60 Hz
Battery Fuse	N/A	15 A
Nominal Charge Rate	2.5 A	10 A
Equalize Voltage	N/A	13.8/27.6 V
Float Voltage	13.4 V	13.0/26.0 V
Current @ Equalize to Float Transition	N/A	5 A
Battery Under-voltage shutdown	N/A	11/22 V
LED Indicators	No	Yes
AC Line Voltage	N/A	Green LED
Battery Connected and Charging	N/A	Yellow LED
Battery Current Drain	30 mA	30 mA
AC Line Connection	Connector Plug	Connector Plug
Battery Connection	Connector Plug	Connector Plug
Control Connection		AC Power Fail Form Relay Form C 2 A Rating
CUL Recognized	Yes	Yes
NFPA 110 Compliant	No	Yes
AGM Compatible	No	Yes
UL1236	No	Yes
CSA 22.2 No. 107	No	Yes

 © 2023 Generac Power Systems, Inc. All rights reserved. All specifications are subject to change without notice.

EATON CIRCUIT BREAKER DATA LUG INFORMATION

Eaton Series C Circuit Breaker Lugs

			Standard Lug	
Amps	Series	Frame	Eaton Part #	Wire (QTY) Size
15-70	C	G	-	(1) #10-1/0
15-100	C	F	3T100FB	(1) #14-1/0
125-200	C	F	3TA225FD	(1) #4-4/0
225	C	F	3TA225FDK	(1) #6-300MCM
250	C	J	TA250KB	(1) #4-350MCM
300	C	K	TA350K	(1) 250-500MCM
350-400	C	K	3TA400K	(2) 3/0-250MCM
450-500	C	L	TA602LD	(2) 3/0-350MCM
600	C	L	3TA603LDK	(2) 400-500MCM
700-800	C	M	TA800MA2	(3) 3/0-400MCM
900-1,000	C	N	T1200NB3	(4) 3/0-400MCM
1,200	C	N	TA1201NB1	(3) 500-750MCM

Eaton Series G Circuit Breaker Lugs

			Standard Lug	
Amps	Series	Frame	Eaton Part #	Wire (Qty) Size
50-250	G	JG	TA250FJ	(1) #8-350MCM
300-600	G	LG	3TA632LK	(2) #2-500MCM
900-1,200	G	NG	TA1201NB1	(3) 500-750MCM
1,400-1,600	G	RG	T1600RD	(4) 1-600MCM
2,000	G	RG	Lugs Not Included	
2,500	G	RG	Lugs Not Included	

 © 2019 Generac Power Systems, Inc. All rights reserved. All specifications are subject to change without notice.

COOLANT HEATER OPTION
2000 WATT, 240VAC

SPECIFICATIONS:

VOLTAGE: 240VAC

HEAT POWER: 2000W

FIXED THERMOSTAT: 80°-100°F

HEATING ELEMENT: INCOLOY 800

MAXIMUM PRESSURE: 90 PSI (620 kPa)

PLUG NEMA STD: 6-15P

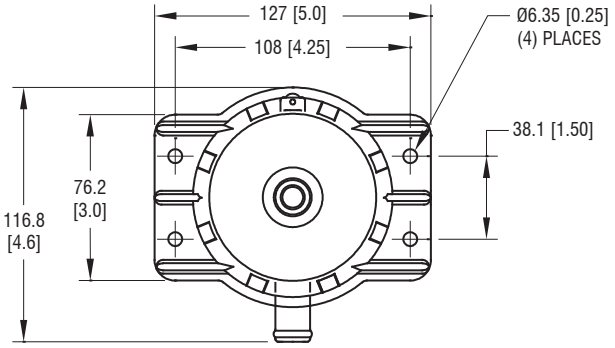

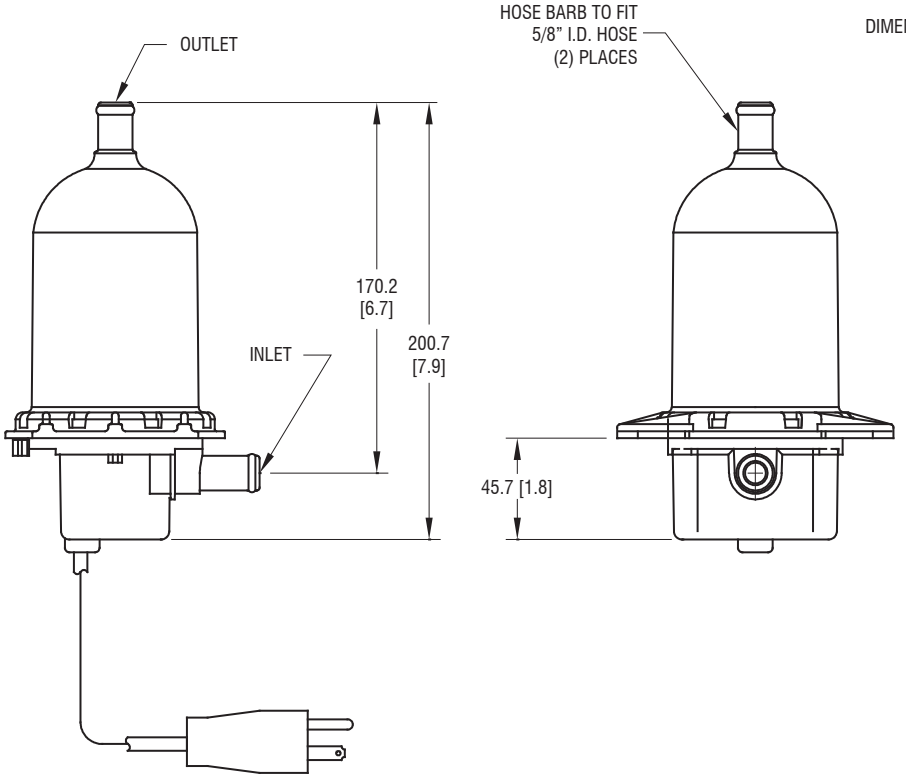

 © 2015 Generac Power Systems, Inc. All rights reserved. All specifications are subject to change without notice.

TX Series Transfer Switch

TXC-100

Automatic Transfer Switch Controller

- Automatic Transfer Switch Controller
- Up to 480 VAC, 50/60 Hz
- Single and Three Phase
- cETLus Recognized Component
- Tested to UL 1008

Image used for illustration purposes only

Codes and Standards

Not all codes and standards apply to all configurations. Contact factory for details.

cETLus Recognized per UL 1008

NFPA 37, 70, 99, 110

NEC 700, 701, 702, 708

Description

Generac's TXC-100 microprocessor based controller provides customers with the flexibility to program a comprehensive group of set points to match the application needs. The controller has 2 programmable inputs and 1 programmable output as standard and is available with an optional expansion board for up to 4 programmable inputs and outputs. The LCD displays real time and historical information with time-stamped events. The integrated plant exerciser can be configured in off, daily, day of week, biweekly, and monthly intervals with user selectable run time. Standard features of the controller include three phase sensing on both sources, phase unbalance, phase reversal, emergency inhibit, and communications.

TX Series Transfer Switch

TXC-100

Automatic Transfer Switch Controller

STANDARD FEATURES

GENERAL

- Graphical LCD-Based Display for Programming, System Diagnostics and Help Menu Display Mimic Diagram with Source Available and Connected LED Indicator
- Time-Stamped Event History Log
- Programmable Exerciser - Daily, Weekly, Bi-Weekly, Monthly
- Methods of Transfer Include: Open with Inphase Transition Only, Time Delay in Neutral Transition, or Inphase with a Default to Time Delay in Neutral Transfer
- Modbus® RTU Communications
- Operating Temperature -4 ° to 158 °F (-20 ° to 70 °C)
- Voltage Agnostic*
- Integrated Anti-condensation Heater Control
- Auxiliary Output Includes: 2WS, SB4T, Fault, and a Programmable Relay Output
- Auxiliary Input Includes: Permissive and Loadshed Inputs (24 VDC)
- Expandable Input/Output Board Module Includes: 4 Relay Outputs and 4 Optically Isolated Inputs
- Front Programmable Control Reduces PPE Needs and Arc Flash Hazard
- Built in Battery Backup - Increases Switch Reliability and Reduces Switch Transition Time to Alternate Source
- Rechargeable Lithium-ion Battery Backup Able to Power the Controller for up to 60 Minutes in the Event of No Source Availability
- Accessible USB Port for Easy Data Downloads, Firmware Updates without Requiring PPE, Reducing the Risk of Arc Flash
- All Amp Nodes Offered with Delayed Transition
- General Alarm Indication
- Heater Programmable through Control for Desired Temperature and Humidity Settings
- Front Accessible Customer Connections and Battery without Arc Flash Exposure
- Auxiliary Generator Battery Backup for Controller

VOLTAGE AND FREQUENCY SENSING

- Three Phase Under and Over Voltage Sensing on Normal and Emergency Sources
- Under and Over Frequency Sensing on Normal and Emergency
- Selectable Settings: Single or Three Phase Voltage
- Sensing on Normal, Emergency and Load 50 or 60 Hz
- Phase Sequence Sensing for Phase Sensitive Loads

PROGRAMMABLE I/O PARAMETERS

Outputs:

- Source 1 – Two Wire Start
- Source 2 – Two Wire Start
- Engine Exercising
- Engine Warmup
- Signal Before Transfer (Elevator Contact)
- General Alarm
- Source 1 Good
- Source 2 Good

Inputs:

- Permissive (Emergency Inhibit)
- Remote Engine Fast Test
- Remote Engine Normal Test
- ATS Timer
- Initiate Demand Response

* 480 V Delta Must be Specified at Time of Ordering for Transformer Kit to be Included

AVAILABLE OPTIONS

- Chicago Code Kit
- 3R Padlockable Cover for Controller (Standard on 3R Enclosure)
- Emergency Inhibit
- Selectable Retransfer
- Manual Generator Retransfer
- Type 1 to 3R Conversion Kit
- Heater Option for Temperature and Humidity Control (Standard on 3R Enclosure)
- Input/Output (I/O) Module
- Current Measurements**
- Power in kW**
- Power Factor**

** When Equipped with Current Transformers

 ©2020 Generac Power Systems, Inc. All rights reserved. All specifications are subject to change without notice.

TX611 Series Transfer Switch

100 – 400 Amps

Contactor Type · Open and Delayed Transition

- Automatic Transfer Switch
- 100 – 400 A, up to 480 VAC, 60 Hz
- Single or Three Phase
- 2, 3, or 4 Poles
- UL Type 1 or Type 3R Enclosure
- Open and Inphase or Open with Delayed Transition
- ETLus and cETLus
- 3 Cycle Rated for Easy Upstream Breaker Coordination

Image used for illustration purposes only

Codes and Standards

ETLus and cETLus Listed to UL 1008

NFPA 70, 99, 110

NEC 700, 701, 702, 708

OSHPD and Seismic Certified CBC 2019, CBC 2016, IBC 2018, IBC 2015, IBC 2012, IBC 2009, ASCE 7-10, ASCE 7-16, ICC-ES AC-156

Description

Generac's patented* contactor is featured in the TX contactor type transfer switch, which is a double-throw robust switch construction with inherent interlocks for safe positive transfer between power sources. Featuring a transition time of less than 20 milliseconds, this high speed transfer is ideal for all applications, including motor load applications. The contacts are silver composite for long life, resisting pitting or burning. The switches are rated for full load transfers in mission critical, emergency, legally required, and optional power systems.

The microprocessor based controller provides the customers with the flexibility to program a comprehensive group of set points to match the application needs. The controller has two programmable inputs and one programmable output as standard and is available with optional expansion boards for up to four programmable inputs and outputs. The LCD displays real time and historical information with time-stamped events. The integrated plant exerciser can be configured in off, daily, day of week, biweekly, and monthly intervals with user selectable run time. Standard features of the controller include three phase sensing on both sources, phase unbalance, phase reversal, load shed, emergency inhibit, and communications.

*Patent Number: US 11,227,728 B2

TX611 Series Transfer Switch

100 – 400 Amps

Contactor Type · Open and Delayed Transition

STANDARD FEATURES

GENERAL

- Small Footprint, Results in Easy Mounting and Installation for Reduced Time and Costs
- Cable Entry is Top or Bottom
- Double-Throw, Stored Energy Transfer Mechanism
- Can be Electrically Isolated while Energized
- Graphical LCD-Based Display for Programming, System Diagnostics and Help Menu Display Mimic
- Diagram with Source Available and Connected LED Indicator
- Method of Transfer: Open with Inphase Transition
- Mechanically Interlocked to Prevent Connection of Both Sources
- Modbus® RTU
- TXC 100 Controller
- Operating Temperature -4 ° to 158 °F (-20 ° to 70 °C)
- Removable Top and Bottom Plates for Ease of Entry
- Voltage Agnostic*
- High Withstand and Closing Ratings
- Heater Kit Standard on All 3R Enclosures
- Auxiliary Output Includes: Two Wire Start, Signal Before Transfer, Fault, and a Programmable Relay Output
- Auxiliary Input Includes: Permissive Inputs (24 VDC)
- General Alarm Indication
- 2 Year Standard Warranty
- IBC 2018, 2015, 2012, 2009

VOLTAGE AND FREQUENCY SENSING

- Three Phase Under and Over Voltage Sensing on Normal and Emergency Sources
- Under and Over Frequency Sensing on Normal and Emergency
- Selectable Settings: Single or Three Phase Voltage
- Sensing on Normal, Emergency and Load 60 Hz
- Phase Sequence Sensing for Phase Sensitive Loads

Start Circuit

- 2-Wire Start
- 3-Wire Start From C Contact for Circuit Monitoring

Digital Outputs

- Signal Before Transfer (Elevator)
- General Alarm

Digital Inputs

- Emergency Inhibit (Permissive & Load Shed)
- Go to Emergency (Demand Response)
- Manual Generator Retransfer

CONTROLS

- Front Programmable Control Reduces PPE Needs and Arc Flash Hazard
- Built in Battery Backup - Increases Switch Reliability and Reduces Switch Transition Time to Alternate Source
- Battery Backup Able to Power the Controller for up to 60 Minutes in the Event of No Source Availability
- Generator Battery Backup for Controller
- Accessible USB Port for Easy Data Downloads, Firmware Updates without Requiring PPE, Reducing the Risk of Arc Flash
- All Amp Nodes Offered with Delayed Transition
- Heater Programmable through Control for Desired Temperature and Humidity Settings
- Front Accessible Customer Connections
- Time-Stamped Event History Log
- Programmable Exerciser - Daily, Weekly, Bi-Weekly, Monthly

* 480 V 3-Wire Systems Must be Specified at Time of Ordering for Transformer Kit to be Included

CONFIGURABLE OPTIONS

- Chicago Code Kit
- 3R Padlockable Cover for Controller (Standard on 3R Enclosure)
- CTs for Integrated Metering
- Heater Option for Temperature and Humidity Control (Standard on 3R)
- Time Delay in Neutral Transition (TDN), or Inphase with a Default to Time Delay in Neutral Transfer
- Expandable Input/Output Board Module Includes: 4 Relay Outputs and 4 Optically Isolated Inputs
- IBC Seismic Certified/Seismic Rated
- 2 Year Extended Limited Warranty
- 5 Year Basic Limited Warranty
- 5 Year Extended Limited Warranty
- 7 Year Extended Limited Warranty
- 10 Year Extended Limited Warranty

Engineered Options

- Transient Voltage Surge Suppressor (TVSS)
- NEMA 4X Stainless Steel (304 or 316) Enclosure
- Manual Generator Retransfer Switch
- Go to Emergency Switch

Conversion Kits

- 480 V Transformer Kit for 3-Wire Systems
- UL Type 1 to Type 3R Kit

TX611 Series Transfer Switch

100 – 400 Amps

Contactor Type · Open and Delayed Transition

UNIT DIMENSIONS*

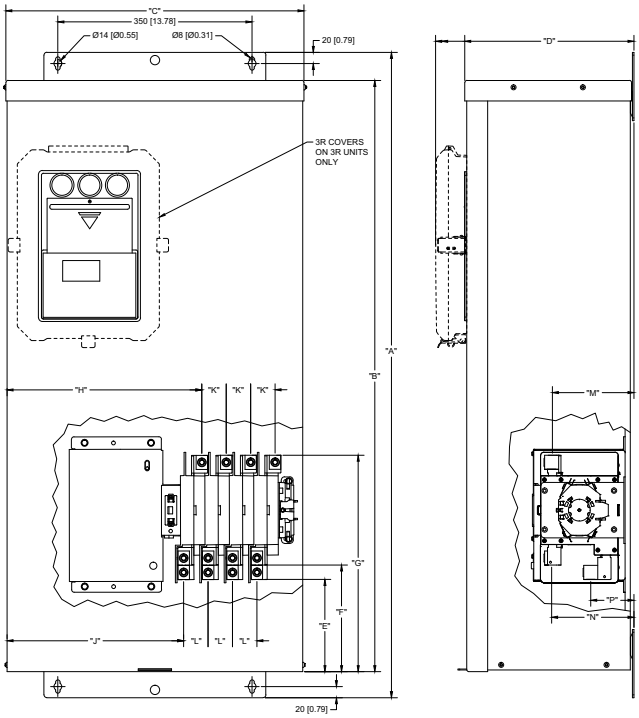

Contactor Type, Open and Delayed Transition, 100 – 400 A

Description	in (mm)														Cu/Al					lbs (kg)
	A (Height)	B (Height)	C (Width)	D (Depth)	E (Dim)	F (Dim)	G (Dim)	H (Dim)	J (Dim)	K (Dim)	L (Dim)	M (Dim)	N (Dim)	P (Dim)	Normal 75 °C Wire	Standby Source 75 °C Wire	Load 75 °C Wire	Neutral Connection	Ground Connection	Weight
100A NON SER TYPE 1	35.6 (903)	31.7 (806)	21.2 (538)	12.0 (305)	8.9 (226)	9.9 (252)	18.5 (471)	13.7 (348)	12.4 (315)	1.7 (44)	1.7 (44)	5.8 (148)	5.8 (148)	3.1 (79)	(1) 2/0 - 14	(1) 2/0 - 14	(1) 2/0 - 14	(5) 2/0 - 14	(2) 1/0 - 14	105.6 (48)
100A NON SER TYPE 3R	35.6 (903)	31.7 (806)	21.2 (538)	13.9 (355)	8.9 (226)	9.9 (252)	18.5 (471)	13.7 (348)	12.4 (315)	1.7 (44)	1.7 (44)	5.8 (148)	5.8 (148)	3.1 (79)	(1) 2/0 - 14	(1) 2/0 - 14	(1) 2/0 - 14	(5) 2/0 - 14	(2) 1/0 - 14	110.0 (50)
150A NON SER TYPE 1	35.6 (903)	31.7 (806)	21.2 (538)	12.0 (305)	9.3 (236)	10.3 (262)	18.1 (460)	13.7 (348)	12.4 (315)	1.7 (44)	1.7 (44)	6.0 (153)	6.0 (153)	3.3 (84)	(1) 250 - 6	(1) 250 - 6	(1) 250 - 6	(4) 350 - 6	(2) 250 - 6	116.6 (53)
150A NON SER TYPE 3R	35.6 (903)	31.7 (806)	21.2 (538)	13.9 (355)	9.3 (236)	10.3 (262)	18.1 (460)	13.7 (348)	12.4 (315)	1.7 (44)	1.7 (44)	6.0 (153)	6.0 (153)	3.3 (84)	(1) 250 - 6	(1) 250 - 6	(1) 250 - 6	(4) 350 - 6	(2) 250 - 6	121.0 (55)
200A NON SER TYPE 1	35.6 (903)	31.7 (806)	21.2 (538)	12.0 (305)	9.3 (236)	10.3 (262)	18.1 (460)	13.7 (348)	12.4 (315)	1.7 (44)	1.7 (44)	6.0 (153)	6.0 (153)	3.3 (84)	(1) 250 - 6	(1) 250 - 6	(1) 250 - 6	(4) 350 - 6	(2) 250 - 6	116.6 (53)
200A NON SER TYPE 3R	35.6 (903)	31.7 (806)	21.2 (538)	13.9 (355)	9.3 (236)	10.3 (262)	18.1 (460)	13.7 (348)	12.4 (315)	1.7 (44)	1.7 (44)	6.0 (153)	6.0 (153)	3.3 (84)	(1) 250 - 6	(1) 250 - 6	(1) 250 - 6	(4) 350 - 6	(2) 250 - 6	121.0 (55)
300A NON SER TYPE 1	51.4 (1,305)	47.5 (1,206)	24.2 (614)	12.0 (305)	9.7 (246)	11.5 (292)	20.3 (516)	14.8 (377)	13.1 (311)	2.3 (59)	2.3 (59)	6.5 (166)	6.5 (166)	3.3 (84)	(1) 600 - 4 or (2) 250 - 1/0	(1) 600 - 4 or (2) 250 - 1/0	(1) 600 - 4 or (2) 250 - 1/0	(5) 600 MCM - 4 or (10) 250 MCM - 1/0	(2) 250 - 6	173.8 (79)
300A NON SER TYPE 3R	51.4 (1,305)	47.5 (1,206)	24.2 (614)	13.9 (355)	9.7 (246)	11.5 (292)	20.3 (516)	14.8 (377)	13.1 (311)	2.3 (59)	2.3 (59)	6.5 (166)	6.5 (166)	3.3 (84)	(1) 600 - 4 or (2) 250 - 1/0	(1) 600 - 4 or (2) 250 - 1/0	(1) 600 - 4 or (2) 250 - 1/0	(5) 600 MCM - 4 or (10) 250 MCM - 1/0	(2) 250 - 6	178.2 (81)
400A NON SER TYPE 1	51.4 (1,305)	47.5 (1,206)	24.2 (614)	12.0 (305)	9.7 (246)	11.5 (292)	20.3 (516)	14.8 (377)	13.1 (311)	2.3 (59)	2.3 (59)	6.5 (166)	6.5 (166)	3.3 (84)	(1) 600 - 4 or (2) 250 - 1/0	(1) 600 - 4 or (2) 250 - 1/0	(1) 600 - 4 or (2) 250 - 1/0	(5) 600 MCM - 4 or (10) 250 MCM - 1/0	(2) 250 - 6	173.8 (79)
400A NON SER TYPE 3R	51.4 (1,305)	47.5 (1,206)	24.2 (614)	13.9 (355)	9.7 (246)	11.5 (292)	20.3 (516)	14.8 (377)	13.1 (311)	2.3 (59)	2.3 (59)	6.5 (166)	6.5 (166)	3.3 (84)	(1) 600 - 4 or (2) 250 - 1/0	(1) 600 - 4 or (2) 250 - 1/0	(1) 600 - 4 or (2) 250 - 1/0	(5) 600 MCM - 4 or (10) 250 MCM - 1/0	(2) 250 - 6	178.2 (81)

UL 1008 Withstand and Closing Ratings

Ampere Rating	Specific Breaker (kA)**	3-Cycle Rating (kA)	Fuse Rating (Class J)	Fuse Size	Voltage
100	35	22	200 kA	200 A	480V
150	42	22	200 kA	200 A	480V
200	42	22	200 kA	200 A	480V
300	65	35	200 kA	400 A	480V
400	65	35	200 kA	400 A	480V

* All measurements are approximate and for estimation purposes only. Specification characteristics may change without notice. Please contact a Generac Power Systems Industrial Dealer for detailed installation drawings.
** See Specific Breaker List available on GENconnect.

Generac Power Systems, Inc. | P.O. Box 8 | Waukesha, WI 53189
P: (262) 544-4811

©2023 Generac Power Systems, Inc. All rights reserved. All specifications are subject to change without notice.

Part No. A0000528440
Rev. E 04/21/2023

SPECIFIC BREAKER LIST
TX611 Series Transfer Switch

TX611 Series Switches Covered:

100A up to 480V

Short-Circuit Withstand and Closing Fuse Ratings

When protected by a fuse of the specific fuse class and maximum ampere rating as marked below, this transfer switch is suitable for use in a circuit capable of delivering the short-circuit current at the maximum voltage marked.

Switch Ampere Rating	Transfer Switch Short-Circuit Current Rating (RMS Symmetrical Amperes x 1,000)	Voltage (Volts AC, Maximum)	Fuse Class	Rating (Amperes)
100	200	480	J	200

Specific Circuit Breaker Manufacturer and Type Listing

When protected by a circuit breaker of the specific manufacturer, type, and ampere rating as marked below, this transfer switch is suitable for use in circuits capable of delivering short-circuit current at the maximum voltage marked.

Switch Ampere Rating	Transfer Switch Short-Circuit Current Rating (RMS Symmetrical Amperes x 1,000)	Voltage (Volts AC, Maximum)	Manufacturer	Type	Circuit Breaker Rating (Amperes Maximum)
100	25	480	Square D	BJ, BG, BD	125
100	35	480	Square D	HD, HG, HJ, HL, HR	150
100	35	480	Square D	JG, JJ, JL, JR	200
100	30	480	Eaton	FD, FDC, FDCE	200
100	30	480	Eaton	FDE, HFD, HFDE	200
100	35	480	Eaton	EGE, EGC	125
100	35	480	Eaton	EGH, EGS	125
100	35	480	Eaton	HJD, JD, JDB	200
100	35	480	Eaton	JDC, JGC, JGH	200
100	35	480	Eaton	JGS, JGU, JGX	200
100	35	480	Eaton	LGC, LGH, LGS	200
100	35	480	Eaton	LGU, LGX	200
100	35	480	GE/ABB	SGL, SGP	125
100	35	480	GE/ABB	SEL, SEP, PE_N	125
100	35	480	GE/ABB	PE_H, PE_L	125
100	35	480	Siemens	3VA52_6	200

Any Breaker (3 Cycle) Withstand and Closing Rating

When protected by a circuit breaker, this transfer switch is suitable for use in a circuit capable of delivering the short-circuit current for the maximum time duration and voltage marked below. The circuit breaker must include an instantaneous trip response unless the available short-circuit current is less than or equal to the short-time rating of the transfer switch and the circuit breaker includes a short-time trip response. The maximum clearing time of the instantaneous trip response must be less than or equal to the time duration shown for the marked short-circuit current. When protected by a circuit breaker with a short-time trip response, the short-time response of the circuit breaker must be coordinated with the short-time current rating of the transfer switch as marked below.

Switch Ampere Rating	Transfer Switch Short-Circuit Current Rating (RMS Symmetrical Amperes x 1,000)	Voltage (Volts AC, Maximum)	Time Duration (Sec, Maximum)
100	22	480	0.050

SPECIFIC BREAKER LIST
TX611 Series Transfer Switch

TX611 Series Switches Covered:

150A up to 480V

Short-Circuit Withstand and Closing Fuse Ratings

When protected by a fuse of the specific fuse class and maximum ampere rating as marked below, this transfer switch is suitable for use in a circuit capable of delivering the short-circuit current at the maximum voltage marked.

Switch Ampere Rating	Transfer Switch Short-Circuit Current Rating (RMS Symmetrical Amperes x 1,000)	Voltage (Volts AC, Maximum)	Fuse Class	Rating (Amperes)
150	200	480	J	200

Specific Circuit Breaker Manufacturer and Type Listing

When protected by a circuit breaker of the specific manufacturer, type, and ampere rating as marked below, this transfer switch is suitable for use in circuits capable of delivering short-circuit current at the maximum voltage marked.

Switch Ampere Rating	Transfer Switch Short-Circuit Current Rating (RMS Symmetrical Amperes x 1,000)	Voltage (Volts AC, Maximum)	Manufacturer	Type	Circuit Breaker Rating (Amperes Maximum)
150	25	480	Square D	BJ, BG, BD	125
150	42	480	Square D	HD, HG, HJ, HL, HR	150
150	42	480	Square D	JG, JJ, JL, JR	200
150	30	480	Eaton	FD, FDC, FDCE	200
150	30	480	Eaton	FDE, HFD, HFDE	200
150	42	480	Eaton	EGE, EGC	125
150	42	480	Eaton	EGH, EGS	125
150	35	480	Eaton	HJD, JD, JDB	200
150	35	480	Eaton	JDC, JGC, JGH	200
150	35	480	Eaton	JGS, JGU, JGX	200
150	35	480	Eaton	LGC, LGH, LGS	200
150	35	480	Eaton	LGU, LGX	200
150	35	480	GE/ABB	SGL, SGP	125
150	42	480	GE/ABB	SEL, SEP, PE_N	150
150	42	480	GE/ABB	PE_H, PE_L	150
150	42	480	GE/ABB	THLC1	150
150	42	480	Siemens	3VA52_6	200

Any Breaker (3 Cycle) Withstand and Closing Rating

When protected by a circuit breaker, this transfer switch is suitable for use in a circuit capable of delivering the short-circuit current for the maximum time duration and voltage marked below. The circuit breaker must include an instantaneous trip response unless the available short-circuit current is less than or equal to the short-time rating of the transfer switch and the circuit breaker includes a short-time trip response. The maximum clearing time of the instantaneous trip response must be less than or equal to the time duration shown for the marked short-circuit current. When protected by a circuit breaker with a short-time trip response, the short-time response of the circuit breaker must be coordinated with the short-time current rating of the transfer switch as marked below.

Switch Ampere Rating	Transfer Switch Short-Circuit Current Rating (RMS Symmetrical Amperes x 1,000)	Voltage (Volts AC, Maximum)	Time Duration (Sec, Maximum)
150	22	480	0.050

SPECIFIC BREAKER LIST
TX611 Series Transfer Switch

TX611 Series Switches Covered:

200A up to 480V

Short-Circuit Withstand and Closing Fuse Ratings

When protected by a fuse of the specific fuse class and maximum ampere rating as marked below, this transfer switch is suitable for use in a circuit capable of delivering the short-circuit current at the maximum voltage marked.

Switch Ampere Rating	Transfer Switch Short-Circuit Current Rating (RMS Symmetrical Amperes x 1,000)	Voltage (Volts AC, Maximum)	Fuse Class	Rating (Amperes)
200	200	480	J	200

Specific Circuit Breaker Manufacturer and Type Listing

When protected by a circuit breaker of the specific manufacturer, type, and ampere rating as marked below, this transfer switch is suitable for use in circuits capable of delivering short-circuit current at the maximum voltage marked.

Switch Ampere Rating	Transfer Switch Short-Circuit Current Rating (RMS Symmetrical Amperes x 1,000)	Voltage (Volts AC, Maximum)	Manufacturer	Type	Circuit Breaker Rating (Amperes Maximum)
200	25	480	Square D	BJ, BG, BD	125
200	42	480	Square D	HD, HG, HJ, HL, HR	150
200	42	480	Square D	JG, JJ, JL, JR	200
200	30	480	Eaton	FD, FDC, FDCE	200
200	30	480	Eaton	FDE, HFD, HFDE	200
200	42	480	Eaton	EGE, EGC	125
200	42	480	Eaton	EGH, EGS	125
200	35	480	Eaton	HJD, JD, JDB	200
200	35	480	Eaton	JDC, JGC, JGH	200
200	35	480	Eaton	JGS, JGU, JGX	200
200	35	480	Eaton	LGC, LGH, LGS	200
200	35	480	Eaton	LGU, LGX	200
200	35	480	GE/ABB	SGL, SGP	125
200	42	480	GE/ABB	SEL, SEP, PE_N	150
200	42	480	GE/ABB	PE_H, PE_L	150
200	42	480	GE/ABB	THLC1	150
200	42	480	Siemens	3VA52_6	200

Any Breaker (3 Cycle) Withstand and Closing Rating

When protected by a circuit breaker, this transfer switch is suitable for use in a circuit capable of delivering the short-circuit current for the maximum time duration and voltage marked below. The circuit breaker must include an instantaneous trip response unless the available short-circuit current is less than or equal to the short-time rating of the transfer switch and the circuit breaker includes a short-time trip response. The maximum clearing time of the instantaneous trip response must be less than or equal to the time duration shown for the marked short-circuit current. When protected by a circuit breaker with a short-time trip response, the short-time response of the circuit breaker must be coordinated with the short-time current rating of the transfer switch as marked below.

Switch Ampere Rating	Transfer Switch Short-Circuit Current Rating (RMS Symmetrical Amperes x 1,000)	Voltage (Volts AC, Maximum)	Time Duration (Sec, Maximum)
200	22	480	0.050

SPECIFIC BREAKER LIST
TX611 Series Transfer Switch

TX611 Series Switches Covered:

300A up to 480V

Short-Circuit Withstand and Closing Fuse Ratings

When protected by a fuse of the specific fuse class and maximum ampere rating as marked below, this transfer switch is suitable for use in a circuit capable of delivering the short-circuit current at the maximum voltage marked.

Switch Ampere Rating	Transfer Switch Short-Circuit Current Rating (RMS Symmetrical Amperes x 1,000)	Voltage (Volts AC, Maximum)	Fuse Class	Rating (Amperes)
300	200	480	J	400

Specific Circuit Breaker Manufacturer and Type Listing

When protected by a circuit breaker of the specific manufacturer, type, and ampere rating as marked below, this transfer switch is suitable for use in circuits capable of delivering short-circuit current at the maximum voltage marked.

Switch Ampere Rating	Transfer Switch Short-Circuit Current Rating (RMS Symmetrical Amperes x 1,000)	Voltage (Volts AC, Maximum)	Manufacturer	Type	Circuit Breaker Rating (Amperes Maximum)
300	42	480	Square D	CJH	600
300	50	480	Square D	HD, HG, HJ, HL, HR	150
300	50	480	Square D	JG, JJ, JL, JR	250
300	50	480	Square D	LG, LA, LH	400
300	50	480	Square D	CJL	600
300	65	480	Square D	LC, LE, LI, LJ, LL	600
300	65	480	Square D	LR, LX, LXI	600
300	50	480	Eaton	LA TRI PACK	400
300	50	480	Eaton	CK400N	400
300	50	480	Eaton	LGS	600
300	65	480	Eaton	JDC, HJD	250
300	65	480	Eaton	CHKD, HKD, KDC	400
300	65	480	Eaton	CK400H, DK	400
300	65	480	Eaton	CHLD, LDC, LGC, CLDC	600
300	65	480	Eaton	LGH, LGU, LGX, HLD	600
300	35	480	GE/ABB	S5N	400
300	42	480	GE/ABB	S5H, TB4, TBC6	400
300	50	480	GE/ABB	TBC4, THLC4, TLB4	400
300	50	480	GE/ABB	TB6	600
300	65	480	GE/ABB	FGH, FGL, FGN	600
300	65	480	GE/ABB	FGP, SGL, SGP	600
300	65	480	GE/ABB	TBC6, TJL1S, TJL4V	600
300	65	480	Siemens	CJD6, HHJD6	400
300	65	480	Siemens	HJXD6, HHJXD6	400
300	65	480	Siemens	HJD6, HLMD6	400
300	65	480	Siemens	SCJD6, SHJD6	400

SPECIFIC BREAKER LIST
TX611 Series Transfer Switch

TX611 Series Switches Covered:

300A up to 480V (Continued)

Specific Circuit Breaker Manufacturer and Type Listing (Continued)					
When protected by a circuit breaker of the specific manufacturer, type, and ampere rating as marked below, this transfer switch is suitable for use in circuits capable of delivering short-circuit current at the maximum voltage marked.					
Switch Ampere Rating	**Transfer Switch Short-Circuit Current Rating (RMS Symmetrical Amperes x 1,000)**	**Voltage (Volts AC, Maximum)**	**Manufacturer**	**Type**	**Circuit Breaker Rating (Amperes Maximum)**
300	65	480	Siemens	3VA64_6	400
300	65	480	Siemens	CLD6, HHLD6	600
300	65	480	Siemens	HLD6, HLXD6	600
300	65	480	Siemens	SHLD6	600

Any Breaker (3 Cycle) Withstand and Closing Rating			
When protected by a circuit breaker, this transfer switch is suitable for use in a circuit capable of delivering the short-circuit current for the maximum time duration and voltage marked below. The circuit breaker must include an instantaneous trip response unless the available short-circuit current is less than or equal to the short-time rating of the transfer switch and the circuit breaker includes a short-time trip response. The maximum clearing time of the instantaneous trip response must be less than or equal to the time duration shown for the marked short-circuit current. When protected by a circuit breaker with a short-time trip response, the short-time response of the circuit breaker must be coordinated with the short-time current rating of the transfer switch as marked below.			
Switch Ampere Rating	**Transfer Switch Short-Circuit Current Rating (RMS Symmetrical Amperes x 1,000)**	**Voltage (Volts AC, Maximum)**	**Time Duration (Sec, Maximum)**
300	35	480	0.050

SPECIFIC BREAKER LIST
TX611 Series Transfer Switch

TX611 Series Switches Covered:

400A up to 480V

Short-Circuit Withstand and Closing Fuse Ratings

When protected by a fuse of the specific fuse class and maximum ampere rating as marked below, this transfer switch is suitable for use in a circuit capable of delivering the short-circuit current at the maximum voltage marked.

Switch Ampere Rating	Transfer Switch Short-Circuit Current Rating (RMS Symmetrical Amperes x 1,000)	Voltage (Volts AC, Maximum)	Fuse Class	Rating (Amperes)
400	200	480	J	400

Specific Circuit Breaker Manufacturer and Type Listing

When protected by a circuit breaker of the specific manufacturer, type, and ampere rating as marked below, this transfer switch is suitable for use in circuits capable of delivering short-circuit current at the maximum voltage marked.

Switch Ampere Rating	Transfer Switch Short-Circuit Current Rating (RMS Symmetrical Amperes x 1,000)	Voltage (Volts AC, Maximum)	Manufacturer	Type	Circuit Breaker Rating (Amperes Maximum)
400	42	480	Square D	CJH	600
400	50	480	Square D	HD, HG, HJ, HL, HR	150
400	50	480	Square D	JG, JJ, JL, JR	250
400	50	480	Square D	LG, LA, LH	400
400	50	480	Square D	CJL	600
400	65	480	Square D	LC, LE, LI, LJ, LL	600
400	65	480	Square D	LR, LX, LXI	600
400	50	480	Eaton	LA TRI PACK	400
400	50	480	Eaton	CK400N	400
400	50	480	Eaton	LGS	600
400	65	480	Eaton	JDC, HJD	250
400	65	480	Eaton	CHKD, HKD, KDC	400
400	65	480	Eaton	CK400H, DK	400
400	65	480	Eaton	CHLD, LDC, LGC, CLDC	600
400	65	480	Eaton	LGH, LGU, LGX, HLD	600
400	35	480	GE/ABB	S5N	400
400	42	480	GE/ABB	S5H, TB4, TBC6	400
400	50	480	GE/ABB	TBC4, THLC4, TLB4	400
400	50	480	GE/ABB	TB6	600
400	65	480	GE/ABB	FGH, FGL, FGN	600
400	65	480	GE/ABB	FGP, SGL, SGP	600
400	65	480	GE/ABB	TBC6, TJL1S, TJL4V	600
400	65	480	Siemens	CJD6, HHJD6	400
400	65	480	Siemens	HJXD6, HHJXD6	400
400	65	480	Siemens	HJD6, HLMD6	400
400	65	480	Siemens	SCJD6, SHJD6	400

SPECIFIC BREAKER LIST
TX611 Series Transfer Switch

TX611 Series Switches Covered:

400A up to 480V (Continued)

Specific Circuit Breaker Manufacturer and Type Listing (Continued)

When protected by a circuit breaker of the specific manufacturer, type, and ampere rating as marked below, this transfer switch is suitable for use in circuits capable of delivering short-circuit current at the maximum voltage marked.

Switch Ampere Rating	Transfer Switch Short-Circuit Current Rating (RMS Symmetrical Amperes x 1,000)	Voltage (Volts AC, Maximum)	Manufacturer	Type	Circuit Breaker Rating (Amperes Maximum)
400	65	480	Siemens	3VA64_6	400
400	65	480	Siemens	CLD6, HHLD6	600
400	65	480	Siemens	HLD6, HLXD6	600
400	65	480	Siemens	SHLD6	600

Any Breaker (3 Cycle) Withstand and Closing Rating

When protected by a circuit breaker, this transfer switch is suitable for use in a circuit capable of delivering the short-circuit current for the maximum time duration and voltage marked below. The circuit breaker must include an instantaneous trip response unless the available short-circuit current is less than or equal to the short-time rating of the transfer switch and the circuit breaker includes a short-time trip response. The maximum clearing time of the instantaneous trip response must be less than or equal to the time duration shown for the marked short-circuit current. When protected by a circuit breaker with a short-time trip response, the short-time response of the circuit breaker must be coordinated with the short-time current rating of the transfer switch as marked below.

Switch Ampere Rating	Transfer Switch Short-Circuit Current Rating (RMS Symmetrical Amperes x 1,000)	Voltage (Volts AC, Maximum)	Time Duration (Sec, Maximum)
400	35	480	0.050

 © 2020 Generac Power Systems, Inc. All rights reserved. All specifications are subject to change without notice.

965

Notes:
1. CONTROL PANEL, (OPTIONAL BATTERY CHARGER INSIDE).
2. 120V, 20A GFCI & 250V, 15A OUTLET (OPTIONAL).
3. CONNECTION POINTS FOR CONTROL WIRES PROVIDED IN THE LOW VOLTAGE CONNECTION BOX (USE LOW VOLTAGE STUB-UP AREA).
4. BATTERY (24 VOLT NEGATIVE GROUND SYSTEM).
5. MAIN LINE CIRCUIT BREAKER (MLCB), AC LOAD LEADS. (DIMENSIONS MAY VARY DUE TO UNIT CONFIGURATION)
6. CENTER OF GRAVITY AND WEIGHT MAY CHANGE DUE TO UNIT OPTIONS.

7. ENGINE SERVICE CONNECTIONS:
   INLET NATURAL GAS = N/A
   INLET DIESEL = 1/2" NPT COUPLING
   RETURN DIESEL = 1/2" NPT COUPLING
   OIL DRAIN = 1/2" NPT COUPLING
   RADIATOR DRAIN = 1/2" NPT COUPLING
   FLEX PIPE OUTLET = N/A
   EXHAUST OUTLET = 4" O.D. PIPE

***** SEE GENERATOR SIZING GUIDE FOR FUEL PIPE SIZING TO SUIT APPLICATION *****

8. AUXILARY AC CONNECTION FOR UNIT OPTIONS ARE LOCATED IN HIGH VOLTAGE CONNECTION BOX, UNLESS AN OPTIONAL LOAD CENTER IS INSTALLED.
9. EXHAUST PIPES MAY BE ROTATED TO ALLOW MUFFLER TO POINT OUT TO THE RIGHT OR LEFT SIDE OF GENERATOR. (MAY NOT APPLY TO ALL UNITS)
10. GENERATOR SET MUST BE INSTALLED SUCH THAT FRESH COOLING AIR IS AVAILABLE AND DISCHARGE AIR FROM THE RADIATOR IS NOT RECIRCULATED.
11. BOTTOM OF GENERATOR SET MUST BE ENCLOSED TO PREVENT PEST INTRUSION AND RECIRCULATION OF DISCHARGE AIR AND/OR IMPROPER COOLING AIR FLOW.
12. INSTALL EXHAUST BLANKETS ALONG THIS LINE.
13. CONNECT THE OPEN SET EXHAUST PER NFPA 37
14. BOLTS OR STUDS USED TO MOUNT UNIT TO PAD, OR BASE TANK, SHALL BE 5/8"-11 GRADE 5. USE STANDARD SAE TORQUE SPECS. (FOR INSTALLATION OF FUEL TANK TO PAD REFER TO INSTALL DRAWING OF THE BASE TANK)

ADDITIONAL NOTES:
FOR WEIGHT AND CENTER OF GRAVITY DATA SEE NOTE 6, AND SHEET 3.

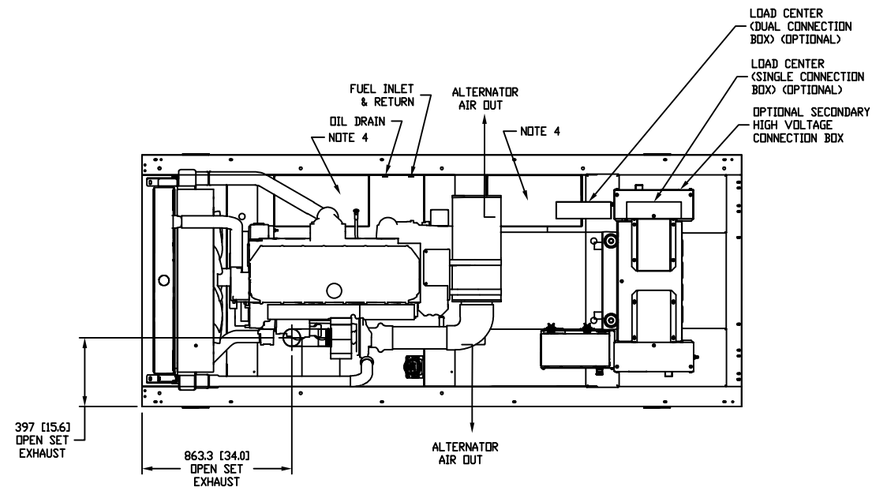

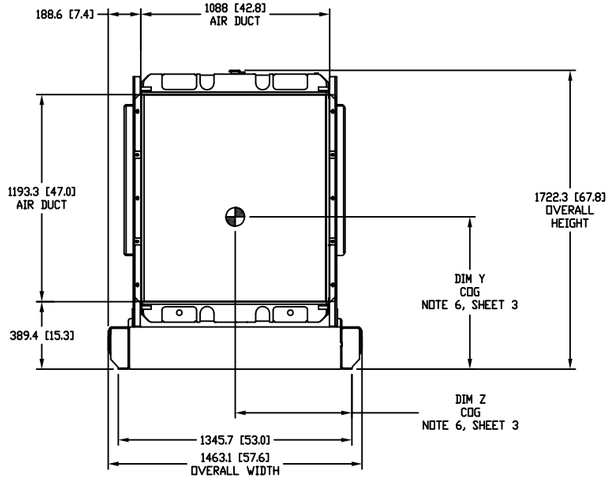

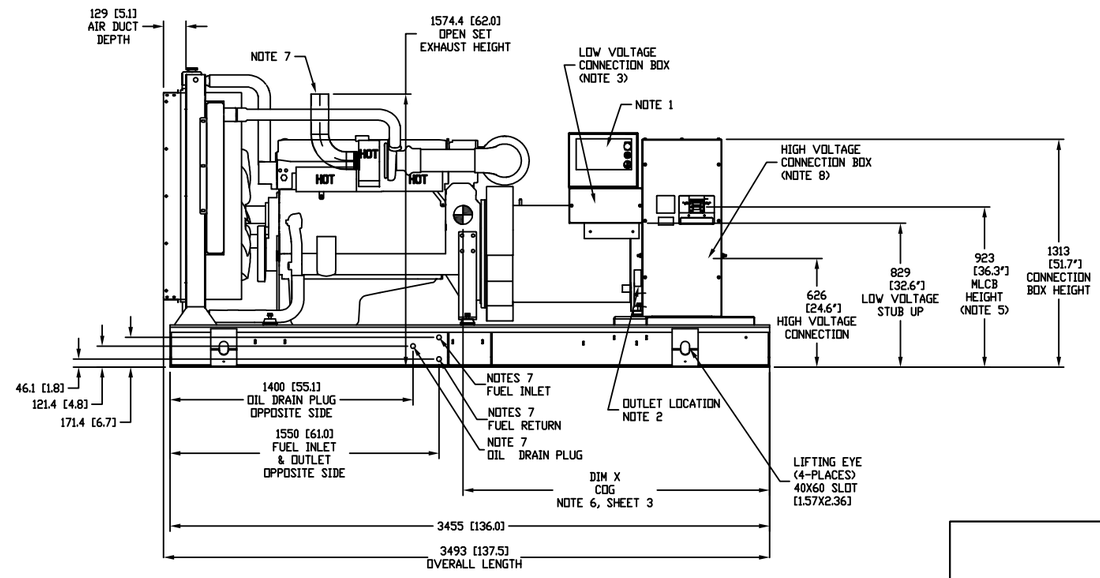

DRAWING CREATED FROM PRO/ENGINEER 3D FILE. ECO MODIFICATION TO BE APPLIED TO SOLID MODEL ONLY.

DIMENSIONS ARE IN MILLIMETERS [INCHES]

INSTALLATION DRAWING

GENERAC POWER SYSTEMS OWNS THE COPYRIGHT OF THIS DRAWING WHICH IS SUPPLIED IN CONFIDENCE AND MUST NOT BE USED FOR ANY PURPOSE OTHER THAN FOR WHICH IT IS SUPPLIED WITHOUT THE EXPRESS WRITTEN CONSENT OF GENERAC POWER SYSTEMS.
© GENERAC POWER SYSTEMS 2012

ELECTRONICALLY APPROVED
INSIDE WINDCHILL

GENERAC

TITLE
OPEN SET
D10.3L 60 HZ: SD300, PD270
SD275, PD248

ISSUE DATE: 6/11/14			
SIZE B	CAGE NO N/A	DWG NO 0J3430	REV F
SCALE 0.035	WT-KG	SHEET 1 of 3	

RECOMMENDED ELECTRICAL STUB-UP	
(HIGH VOLTAGE STUB-UP) AC LOAD LEAD CONDUIT FOR PERMANENT MAGNET EXCITATION CONNECTION BOX	
(LOW VOLTAGE STUB-UP)	

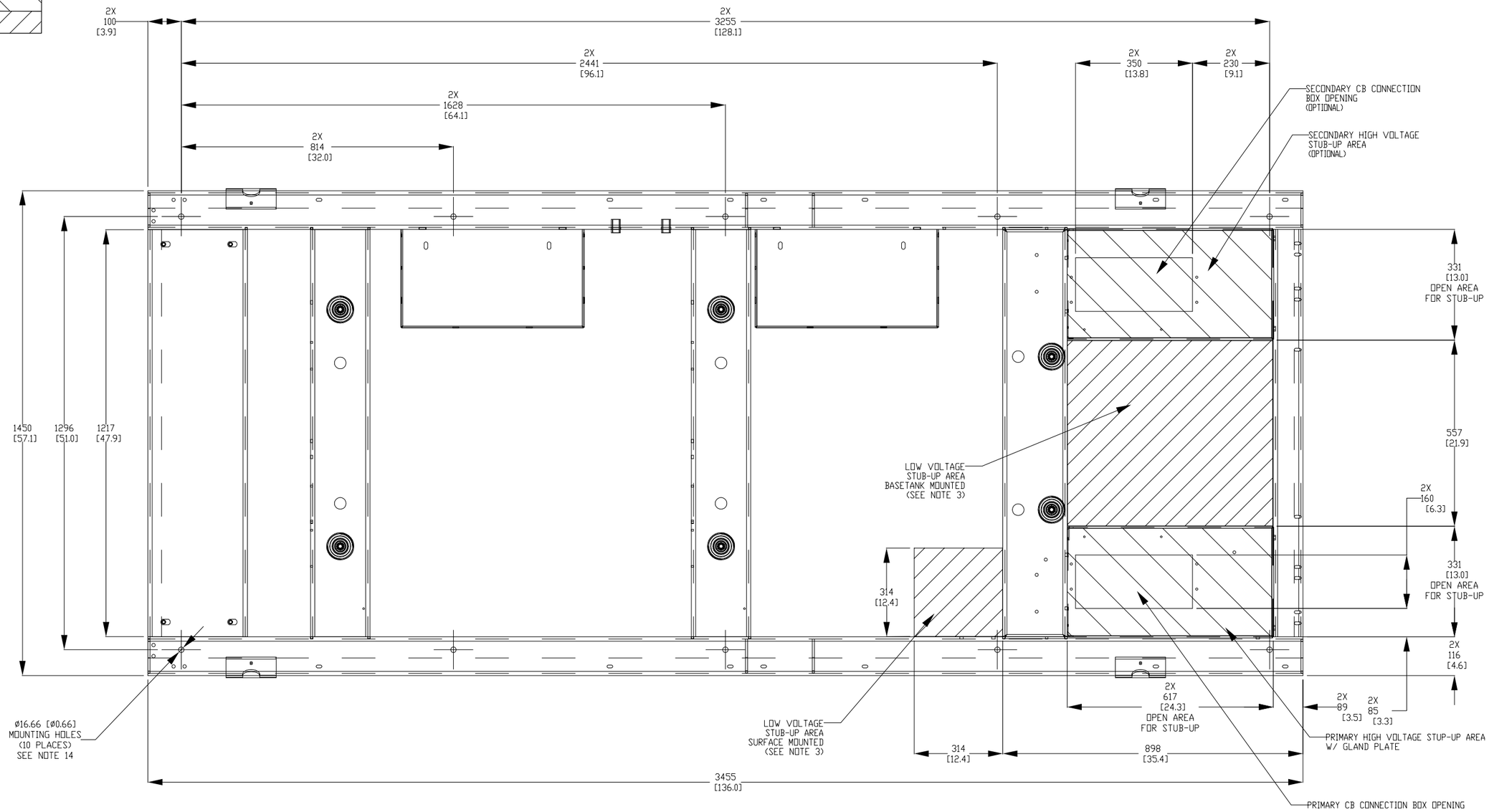

DRAWING CREATED FROM PRO/ENGINEER 3D FILE. ECO MODIFICATION TO BE APPLIED TO SOLID MODEL ONLY.

DIMENSIONS ARE IN MILLIMETERS [INCHES]

INSTALLATION DRAWING

GENERAC POWER SYSTEMS OWNS THE COPYRIGHT OF THIS DRAWING WHICH IS SUPPLIED IN CONFIDENCE AND MUST NOT BE USED FOR ANY PURPOSE OTHER THAN FOR WHICH IT IS SUPPLIED WITHOUT THE EXPRESS WRITTEN CONSENT OF GENERAC POWER SYSTEMS.
© GENERAC POWER SYSTEMS 2012

ELECTRONICALLY APPROVED
INSIDE WINDHILL

GENERAC

TITLE
STUB-UP
D10.3L 60 HZ: SD300, PD270
SD275, PD248

ISSUE DATE: 6/11/14

SIZE	CAGE NO	DWG NO	REV
B	N/A	0J3430	F
SCALE 0.120	WT-KG	SHEET 2 of 3	

967

OPEN SET

MODEL	VOLTAGE	WEIGHT	CENTER OF GRAVITY DIM X	CENTER OF GRAVITY DIM Y	CENTER OF GRAVITY DIM Z
SD275, PD248	208V, 240V, 480V, 600V	2,776 kg [6,121 lbs]	1775 [69.9]	727 [28.6]	675 [26.6]
SD275, PD248, SD/MD300, PD/WD270	208V, 240V, 480V, 600V (350kw UPSIZE)	2,941 kg [6,485 lbs]	1719 [67.7]	721 [28.4]	
SD275, PD248, SD/MD300, PD/WD270	208V, 240V (400kw UPSIZE)	3,197 kg [7,043 lbs]	1691 [66.6]	719 [28.3]	
SD275, PD248, SD/MD300, PD/WD270	480V (400kw UPSIZE)	2,773 kg [6,114 lbs]	1776 [69.9]	726 [28.6]	
SD275, PD248, SD/MD300, PD/WD270	600V (400kw UPSIZE)	2,930 kg [6,461 lbs]	1722 [67.8]	721 [28.4]	
SD/MD300, PD/WD270	208V & 240V (450kw UPSIZE)	3,296 kg [7,267 lbs]	1691 [66.6]	716 [28.2]	
SD/MD300, PD/WD270	480V (500kw UPSIZED)	3,296 kg [7,267 lbs]			
SD/MD300, PD/WD270	600V (500kw UPSIZED)	3,382 kg [7,457 lbs]	1638 [64.5]	714 [28.1]	

NOTE:
CENTER OF GRAVITY AND WEIGHT MAY CHANGE DUE TO UNIT OPTIONS

STD ENCLOSURE, STEEL

MODEL	VOLTAGE	WEIGHT	CENTER OF GRAVITY DIM X	CENTER OF GRAVITY DIM Y	CENTER OF GRAVITY DIM Z
SD275, PD248	208V, 240V, 480V, 600V	3,465 kg [7,642 lbs]	1914 [75.3]	826 [32.5]	629 [24.8]
SD275, PD248, SD/MD300, PD/WD270	208V, 240V, 480V, 600V (350kw UPSIZE)	3,631 kg [8,006 lbs]	1863 [73.3]	816 [32.1]	
SD275, PD248, SD/MD300, PD/WD270	208V, 240V (400kw UPSIZE)	3,887 kg [8,569 lbs]	1835 [72.2]	811 [31.9]	
SD275, PD248, SD/MD300, PD/WD270	480V (400kw UPSIZE)	3,463 kg [7,636 lbs]	1914 [75.4]	826 [32.5]	630 [24.8]
SD275, PD248, SD/MD300, PD/WD270	600V (400kw UPSIZE)	3,620 kg [7,982 lbs]	1865 [73.4]	817 [32.2]	629 [24.8]
SD/MD300, PD/WD270	208V & 240V (450kw UPSIZE)	3,986 kg [8,789 lbs]	1798 [70.8]	806 [31.7]	628 [24.7]
SD/MD300, PD/WD270	480V (500kw UPSIZED)	3,986 kg [8,789 lbs]			
SD/MD300, PD/WD270	600V (500kw UPSIZED)	4,072 kg [8,978 lbs]	1785 [70.3]	803 [31.6]	

STD ENCLOSURE, ALUMINUM

WEIGHT	CENTER OF GRAVITY DIM X	CENTER OF GRAVITY DIM Y	CENTER OF GRAVITY DIM Z
3,106 kg [6,848 lbs]	1869 [73.6]	781 [30.7]	623 [24.5]
3,271 kg [7,212 lbs]	1819 [71.6]	772 [30.4]	
3,527 kg [7,775 lbs]	1785 [70.3]	768 [30.2]	
3,103 kg [6,841 lbs]	1869 [73.6]	780 [30.7]	
3,260 kg [7,188 lbs]	1816 [71.5]	773 [30.4]	
3,626 kg [7,994 lbs]	1745 [68.7]	765 [30.1]	
3,626 kg [7,994 lbs]			
3,712 kg [8,184 lbs]	1732 [68.2]	762 [30.0]	

L1A ENCLOSURE, STEEL

MODEL	VOLTAGE	WEIGHT	CENTER OF GRAVITY DIM X	CENTER OF GRAVITY DIM Y	CENTER OF GRAVITY DIM Z
SD275, PD248	208V, 240V, 480V, 600V	3,676 kg [8,105 lbs]	1826 [71.9]	849 [33.4]	632 [24.9]
SD275, PD248, SD/MD300, PD/WD270	208V, 240V, 480V, 600V (350kw UPSIZE)	3,841 kg [8,469 lbs]	1782 [70.2]	839 [33.0]	
SD275, PD248, SD/MD300, PD/WD270	208V, 240V (400kw UPSIZE)	4,097 kg [9,032 lbs]	1760 [69.3]	833 [32.8]	631 [24.8]
SD275, PD248, SD/MD300, PD/WD270	480V (400kw UPSIZE)	3,673 kg [8,099 lbs]	1826 [71.9]	849 [33.4]	632 [24.9]
SD275, PD248, SD/MD300, PD/WD270	600V (400kw UPSIZE)	3,830 kg [8,445 lbs]	1784 [70.3]	839 [33.0]	
SD/MD300, PD/WD270	208V & 240V (450kw UPSIZE)	4,196 kg [9,252 lbs]	1727 [68.0]	828 [32.6]	631 [24.8]
SD/MD300, PD/WD270	480V (500kw UPSIZED)	4,196 kg [9,252 lbs]			
SD/MD300, PD/WD270	600V (500kw UPSIZED)	4,282 kg [9,441 lbs]	1716 [67.6]	824 [32.4]	

L1A ENCLOSURE, ALUMINUM

WEIGHT	CENTER OF GRAVITY DIM X	CENTER OF GRAVITY DIM Y	CENTER OF GRAVITY DIM Z
3,197 kg [7,047 lbs]	1826 [71.9]	794 [32.5]	625 [24.6]
3,362 kg [7,411 lbs]	1775 [69.9]	785 [30.9]	
3,617 kg [7,974 lbs]	1748 [68.8]	781 [30.7]	
3,194 kg [7,041 lbs]	1826 [71.9]	793 [31.2]	
3,351 kg [7,387 lbs]	1777 [70.0]	786 [30.9]	
3,717 kg [8,194 lbs]	1711 [67.4]	777 [30.6]	
3,717 kg [8,194 lbs]			
3,803 kg [8,383 lbs]	1699 [66.9]	773 [30.4]	

L2A ENCLOSURE, STEEL

MODEL	VOLTAGE	WEIGHT	CENTER OF GRAVITY DIM X	CENTER OF GRAVITY DIM Y	CENTER OF GRAVITY DIM Z
SD275, PD248	208V, 240V, 480V, 600V	3,936 kg [8,678 lbs]	1958 [77.1]	1017 [40.1]	635 [25.0]
SD275, PD248, SD/MD300, PD/WD270	208V, 240V, 480V, 600V (350kw UPSIZE)	4,101 kg [9,042 lbs]	1911 [75.2]	1000 [39.4]	
SD275, PD248, SD/MD300, PD/WD270	208V, 240V (400kw UPSIZE)	4,357 kg [9,605 lbs]	1886 [74.2]	989 [38.9]	634 [25.0]
SD275, PD248, SD/MD300, PD/WD270	480V (400kw UPSIZE)	3,933 kg [8,672 lbs]	1958 [77.1]	1017 [40.0]	635 [25.0]
SD275, PD248, SD/MD300, PD/WD270	600V (400kw UPSIZE)	4,090 kg [9,018 lbs]	1914 [75.3]	1001 [39.4]	
SD/MD300, PD/WD270	208V & 240V (450kw UPSIZE)	4,456 kg [9,825 lbs]	1852 [72.9]	980 [38.6]	634 [24.9]
SD/MD300, PD/WD270	480V (500kw UPSIZED)	4,456 kg [9,825 lbs]			
SD/MD300, PD/WD270	600V (500kw UPSIZED)	4,542 kg [10,014 lbs]	1839 [72.4]	973 [38.3]	633 [24.9]

L2A ENCLOSURE, ALUMINUM

WEIGHT	CENTER OF GRAVITY DIM X	CENTER OF GRAVITY DIM Y	CENTER OF GRAVITY DIM Z
3,303 kg [7,294 lbs]	1895 [74.6]	885 [34.3]	627 [24.7]
3,473 kg [7,657 lbs]	1842 [72.5]	871 [34.3]	
3,729 kg [8,220 lbs]	1814 [71.4]	863 [34.0]	
3,305 kg [7,287 lbs]	1895 [74.6]	884 [34.3]	
3,462 kg [7,633 lbs]	1845 [72.6]	876 [34.3]	
3,828 kg [8,440 lbs]	1776 [69.9]	857 [33.7]	
3,828 kg [8,440 lbs]			
3,914 kg [8,630 lbs]	1763 [69.4]	852 [33.5]	

DRAWING CREATED FROM PRO/ENGINEER 3D FILE. ECO MODIFICATION TO BE APPLIED TO SOLID MODEL ONLY.

INSTALLATION DRAWING

GENERAC POWER SYSTEMS OWNS THE COPYRIGHT OF THIS DRAWING WHICH IS SUPPLIED IN CONFIDENCE AND MUST NOT BE USED FOR ANY PURPOSE OTHER THAN THAT FOR WHICH IT IS SUPPLIED WITHOUT THE EXPRESS WRITTEN CONSENT OF GENERAC POWER SYSTEMS.
© GENERAC POWER SYSTEMS 2014

ELECTRONICALLY APPROVED
INSIDE WINCHILL

GENERAC

TITLE
WEIGHT & CENTER OF GRAVITY
D10.3L 60 HZ: SD300, PD270
SD275, PD248

ISSUE DATE: 6/11/14

SIZE	CAGE NO	DWG NO	REV
B	N/A	0J3430	E

SCALE 0.035 | WT-KG | SHEET 3 of 3

SH	REV
1/1	D

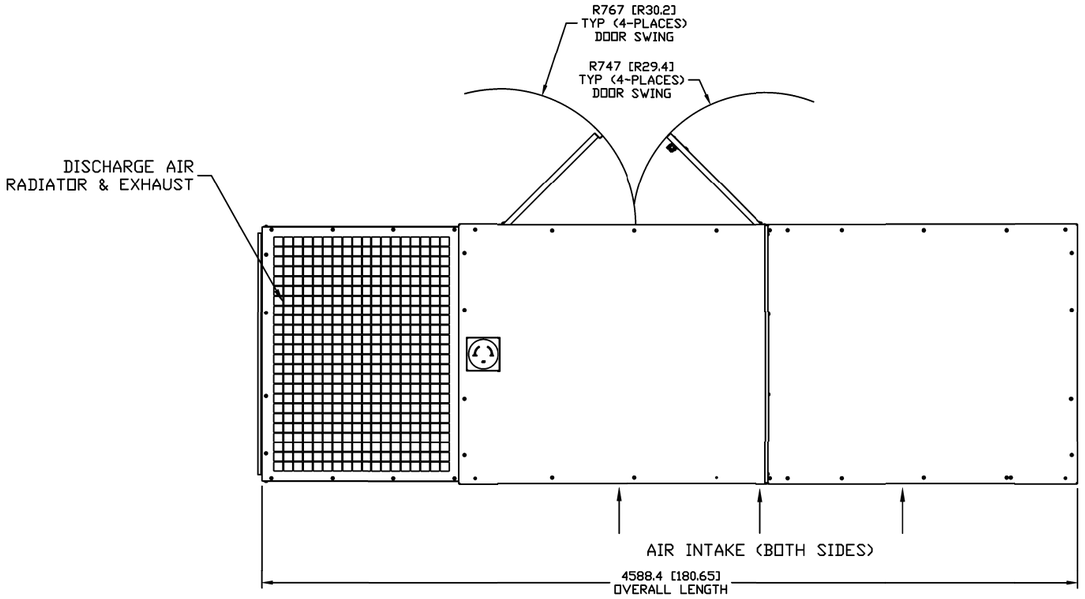

FOR ALL STUB-UP, WEIGHT, AND COG DETAILS, SEE CORRESPONDING OPEN SET DRAWING PER UNIT CONFIGURATION.

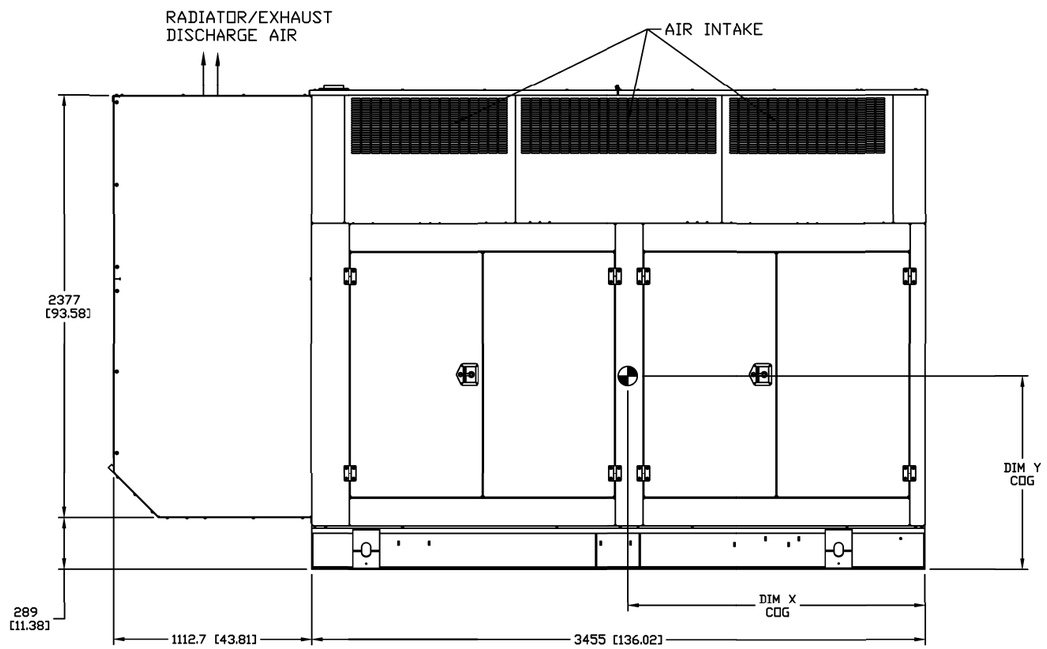

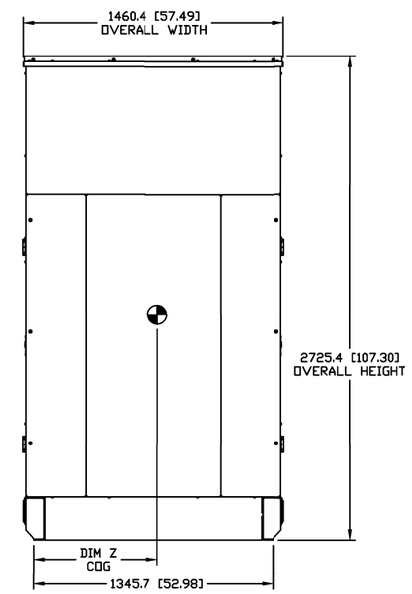

DIMENSIONS ARE IN MILLIMETERS [INCHES]

DRAWING CREATED FROM PRO/ENGINEER 3D FILE. ECO MODIFICATION TO BE APPLIED TO SOLID MODEL ONLY.

INSTALLATION DRAWING

GENERAC POWER SYSTEMS OWNS THE COPYRIGHT OF THIS DRAWING WHICH IS SUPPLIED IN CONFIDENCE AND MUST NOT BE USED FOR ANY PURPOSE OTHER THAN FOR WHICH IT IS SUPPLIED WITHOUT THE EXPRESS WRITTEN CONSENT OF GENERAC POWER SYSTEMS.
© GENERAC POWER SYSTEMS 2012

ELECTRONICALLY APPROVED
INSIDE WINDCHILL

GENERAC

TITLE
L2A ENCLOSURE
D10.3L 60 HZ: SD/MD300, PD/WD270
SD275, PD248

ISSUE DATE: 6/2/14

SIZE	CAGE NO	DWG NO	REV
B	N/A	0J3430C	D

SCALE 0.035 | WT-KG | SHEET 1 of 1

I/N	TANK FITTING	FUNCTION
1	3/8" NPT COUPLING	FUEL RETURN
2	2" NPT WELD FLANGE	FUEL FILL
3		FUEL LEVEL
4	3/8" NPT COUPLING	FUEL SUPPLY
5	4" NPT WELD FLANGE	EMERGENCY VENT (OUTER)
6	2" NPT WELD FLANGE	VENT
7	4" NPT WELD FLANGE	EMERGENCY VENT (INNER)
8	3/4" NPT COUPLING	DRAIN
9	∅ 22 MM HOLE	LEAK DETECTOR

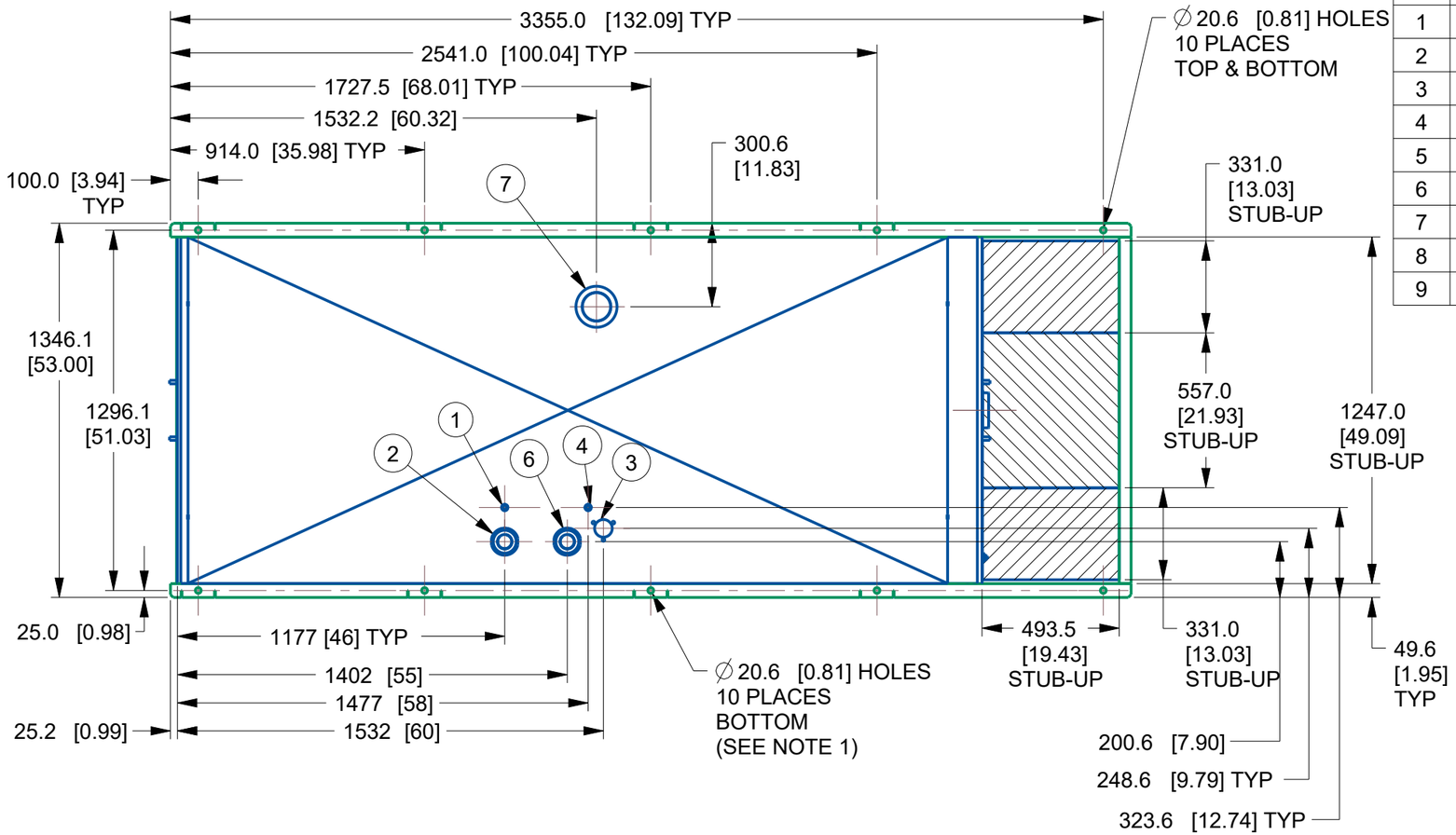

CAPACITY SHOWN: LITER [GALLONS]
WEIGHT SHOWN: KILOGRAMS [POUNDS]
LENGTH SHOWN: MM [INCH]

UL #142 LISTED
ULC-S601 LISTED

NOTES:
1. MOUNTING BOLTS OR STUDS FOR MOUNTING BASETANK TO CONCRETE PAD SHALL BE 3/4-10 GRADE 5. (USE STANDARD SAE TORQUE SPECS.)
2. SEE SHEET 2 FOR TANK DEPTH CHARTS
3. *TANK MEETS MINIMUM OF 130% SECONDARY CONTAINMENT

LOW VOLTAGE STUB-UP

HIGH VOLTAGE STUB-UP

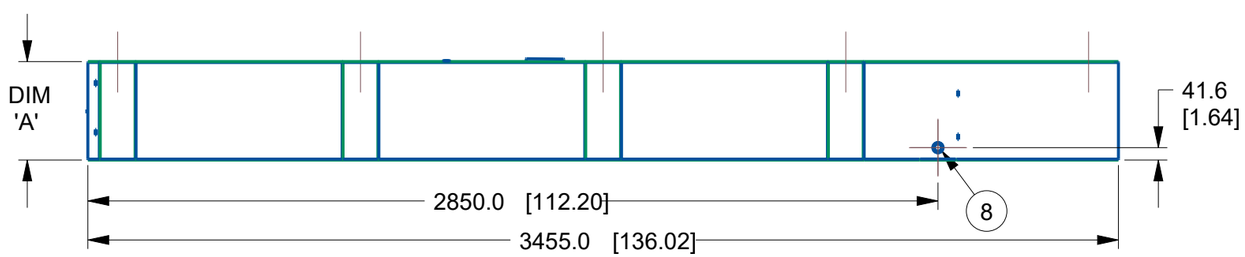

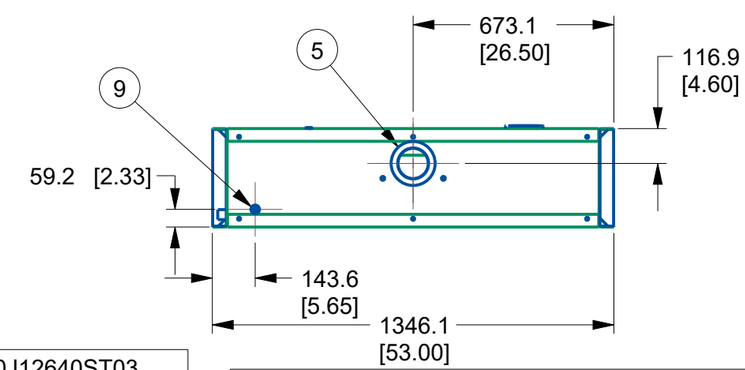

TANK P/N	0J11540ST03 *	0J12210ST03	0J12640ST03
DIM 'A'	330 [13}	635 [25]	940 [37]
TOTAL TANK CAPACITY	741 [196]	1706 [451]	2672 [706]
USABLE TANK CAPACITY	693 [183]	1659 [438]	2624 [693]
DRY WEIGHT [EST]	430 [948]	572 [1260]	724 [1596]

DRAWING CREATED FROM PRO/ENGINEER 3D FILE. ECO MODIFICATION TO BE APPLIED TO SOLID MODEL ONLY.

INSTALLATION DRAWING

GENERAC POWER SYSTEMS OWNS THE COPYRIGHT OF THIS DRAWING WHICH IS SUPPLIED IN CONFIDENCE AND MUST NOT BE USED FOR ANY PURPOSE OTHER THAN FOR WHICH IT IS SUPPLIED WITHOUT THE EXPRESS WRITTEN CONSENT OF GENERAC POWER SYSTEMS. ©GENERAC POWER SYSTEMS 2013

ELECTRONICALLY APPROVED
INSIDE WINDCHILL

GENERAC

TITLE
INSTALL F-GROUP BASETANKS G12

ISSUE DATE: 02/10/11

SIZE	CAGE NO	DWG NO	REV
B	N/A	0J4222	K
SCALE 0.050	WT-KG	SHEET 1 of 2	

NOTE: ROUNDED TO NEAREST GALLON

183G F-GROUP BASETANK (P/N: 0J11540ST03)		
DEPTH: INCHES	U.S GALLONS	NOTES
8.26	196	TOTAL TANK CAPACITY
8	191	
7.34	183	USABLE TANK CAPACITY
7	170	
6	148	
5	127	
4	106	
3	85	
2	63	
1	42	
0	21	

438G F-GROUP BASETANK (P/N: 0J12210ST03)		
DEPTH: INCHES	U.S GALLONS	NOTES
20.23	451	TOTAL TANK CAPACITY
20	446	
19.62	438	USABLE TANK CAPACITY
19	425	
18	404	
17	382	
16	361	
15	340	
14	319	
13	297	
12	276	
11	255	
10	234	
9	212	

693G F-GROUP BASETANK (P/N: 0J12640ST03)		
DEPTH: INCHES	U.S GALLONS	NOTES
32.23	706	TOTAL TANK CAPACITY
32	701	
31.62	693	USABLE TANK CAPACITY
31	680	
30	659	
29	637	
28	616	
27	595	
26	574	
25	552	
24	531	
23	510	
22	489	
21	467	

DRAWING CREATED FROM PRO/ENGINEER 3D FILE. ECO MODIFICATION TO BE APPLIED TO SOLID MODEL ONLY.

INSTALLATION DRAWING

GENERAC POWER SYSTEMS OWNS THE COPYRIGHT OF THIS DRAWING WHICH IS SUPPLIED IN CONFIDENCE AND MUST NOT BE USED FOR ANY PURPOSE OTHER THAN FOR WHICH IT IS SUPPLIED WITHOUT THE EXPRESS WRITTEN CONSENT OF GENERAC POWER SYSTEMS.
©GENERAC POWER SYSTEMS 2013

ELECTRONICALLY APPROVED
INSIDE WINDCHILL

GENERAC

TITLE

INSTALL F-GROUP BASETANKS G12

ISSUE DATE: 02/10/11

SIZE	CAGE NO	DWG NO	REV
B	N/A	0J4222	K

SCALE 0.050 | WT-KG | SHEET 2 of 2

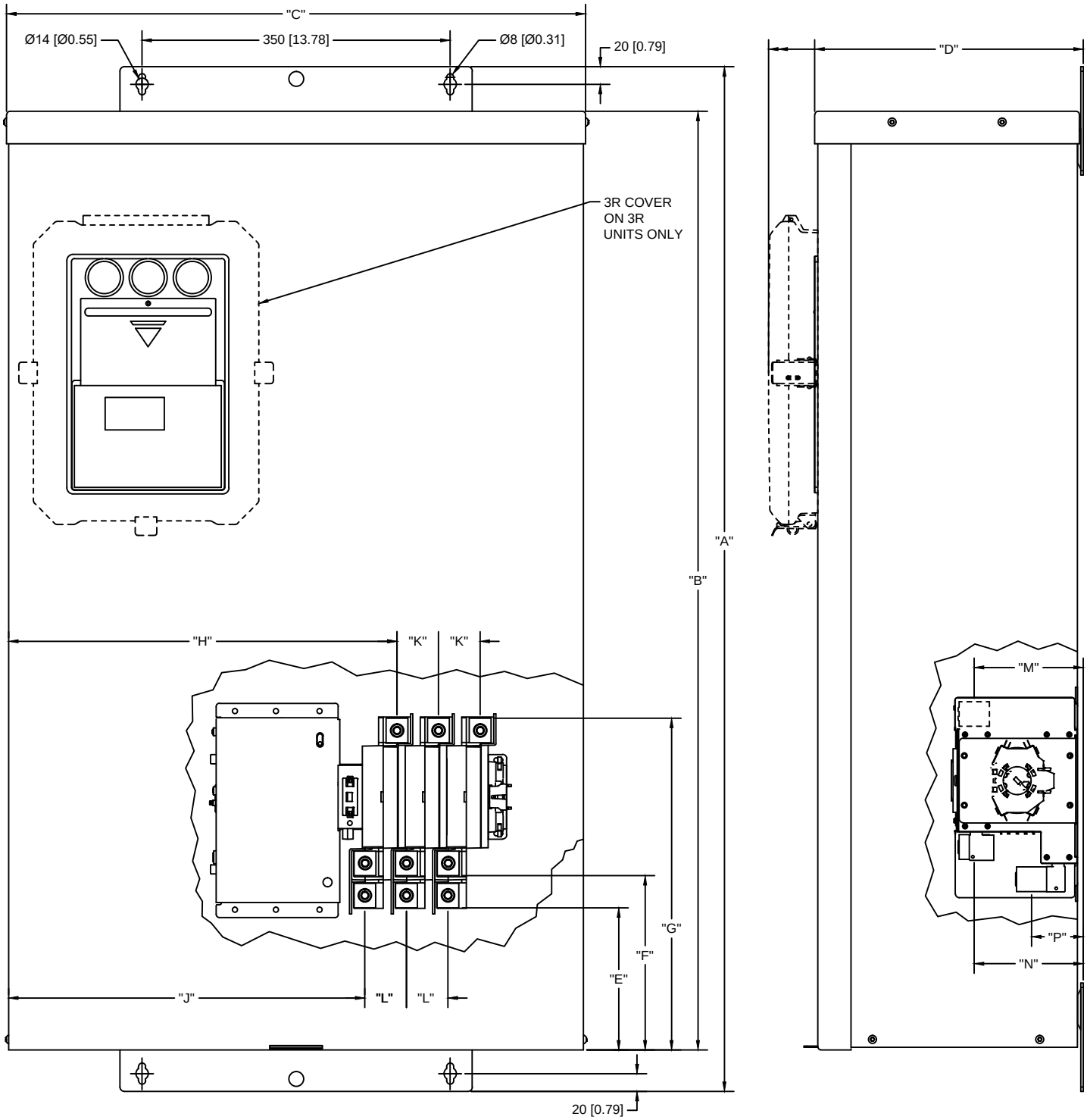

ALL DIMENSION ARE: mm [inches]

DESCRIPTION	HEIGHT "A"	HEIGHT "B"	WIDTH "C"	DEPTH "D"	DIM "E"	DIM "F"	DIM "G"	DIM "H"	DIM "J"	DIM "K"	DIM "L"	DIM "M"	DIM "N"	DIM "P"	WEIGHT
300A NON SER NEMA 1	1305	1205	614	305	246	292	516	377	331	59	59	166	166	84	79kg
	[51.38]	[47.46]	[24.16]	[12.00]	[9.70]	[11.50]	[20.30]	[14.84]	[13.05]	[2.32]	[2.32]	[6.52]	[6.52]	[3.32]	173.8lbs
300A NON SER NEMA 3R	1305	1205	614	355	246	292	516	377	331	59	59	166	166	84	81kg
	[51.38]	[47.46]	[24.16]	[13.99]	[9.70]	[11.50]	[20.30]	[14.84]	[13.05]	[2.32]	[2.32]	[6.52]	[6.52]	[3.32]	178.2lbs
400A NON SER NEMA 1	1305	1205	614	305	246	292	516	377	331	59	59	166	166	84	79kg
	[51.38]	[47.46]	[24.16]	[12.00]	[9.70]	[11.50]	[20.30]	[14.84]	[13.05]	[2.32]	[2.32]	[6.52]	[6.52]	[3.32]	173.8lbs
400A NON SER NEMA 3R	1305	1205	614	355	246	292	516	377	331	59	59	166	166	84	81kg
	[51.38]	[47.46]	[24.16]	[13.99]	[9.70]	[11.50]	[20.30]	[14.84]	[13.05]	[2.32]	[2.32]	[6.52]	[6.52]	[3.32]	178.2lbs

REVISION: D
REVISION DATE: 10/06/2020

ID TX SWITCH NON SERVICE ENTRANCE 3-POLE 300-400A
A0000430688 (DRAWING: A0000561085)
NOT TO SCALE

LEGEND

AH1 – ALARM HORN
ALT – DC CHARGE ALTERNATOR
AVR – AUTO VOLTAGE REGULATOR
BCC – BATTERY CHARGER CONNECTOR
BCH – BATTERY CHARGER
CAND – CAN BUS DIAGNOSTIC CONNECTOR
CB – CIRCUIT BREAKER DPE
CO – CROSS OVER CONNECTOR
COM – COMMUNICATION CONNECTOR
CT_ – CURRENT TRANSFORMER
DB – DIODE BRIDGE
EDC – ENGINE DIGITAL CONTROL
ES1 – EMERGENCY STOP SWITCH
EXC – EXCITER
F_ – FUSE
FLS_ – FUEL LEVEL SENDER
GFCI – GROUND FAULT CIRCUIT INTERRUPT
GND – GROUND BAR CONNECTION
IFT – INTERFACE TRANSFORMER
J_ – ENGINE CONTROL MODULE CONN.
LD – LEAK DETECTOR
MLCB – MAIN LINE CIRCUIT BREAKER
MOD – MODEM CONNECTOR
NB – NEUTRAL BLOCK
R1 – RESISTOR
RB_ – RELAY BOARD
RB_A – RELAY BOARD CONNECTOR
SC – STARTER CONTACTOR
SM – STARTER MOTOR
SW1 – OFF/AUTO/MANUAL SWITCH
SWC – SWITCH CONNECTOR
TB_ – TERMINAL BLOCK
WLS_ – COOLANT LEVEL SENDER

NOTE: ALL WIRES 18 AWG 300V UL LISTED UNLESS SHOWN OTHERWISE
AWG SIZE
12

COMPONENTS LOCATED IN ALTERNATOR CONNECTION BOX

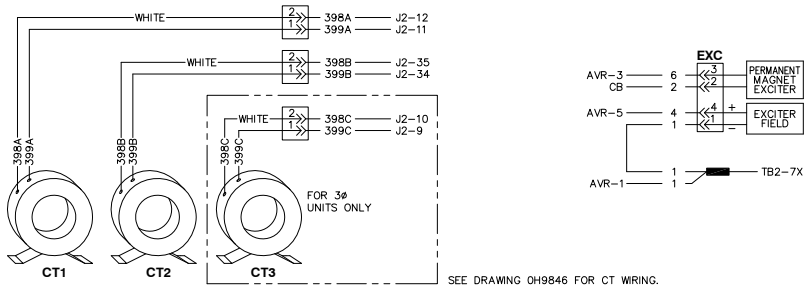

SEE DRAWING 0H9846 FOR CT WIRING.

COMPONENTS LOCATED IN HIGH VOLTAGE CUSTOMER CONNECTION MODULE

CONNECTIONS FOR 1Ø UNIT

NOTE: ALL WIRES IN THIS SECTION ARE 600V RATED

CONNECTIONS FOR 3Ø UNIT

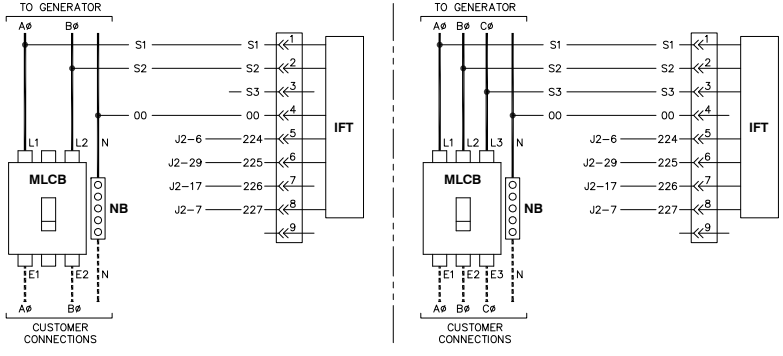

COMPONENTS LOCATED IN HIGH VOLTAGE CUSTOMER CONNECTION MODULE

NOTE: ALL WIRES ON THIS PAGE ARE 600V RATED

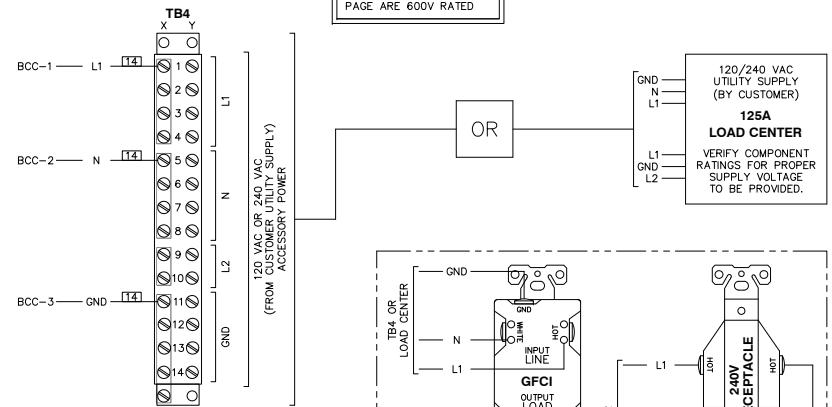

NOTE:
FOR FIELD WIRING TO CUSTOMER CONNECTIONS (TERMINAL STRIP)
MAXIMUM WIRE SIZE: #10 AWG
RECOMMENDED TIGHTENING TORQUE: 14 LB-IN

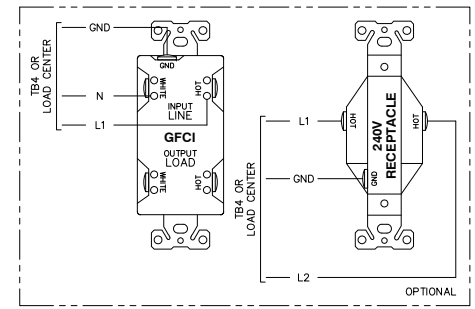

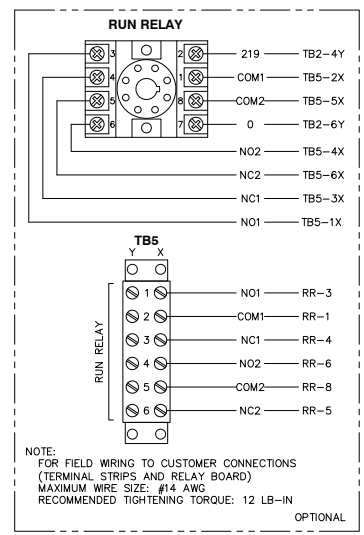

NOTE:
FOR FIELD WIRING TO CUSTOMER CONNECTIONS (TERMINAL STRIPS AND RELAY BOARD)
MAXIMUM WIRE SIZE: #14 AWG
RECOMMENDED TIGHTENING TORQUE: 12 LB-IN

OPTIONAL

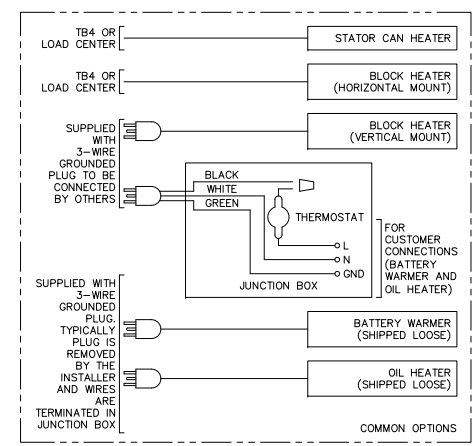

COMPONENTS LOCATED ON LOW VOLTAGE CUSTOMER CONNECTION PANEL

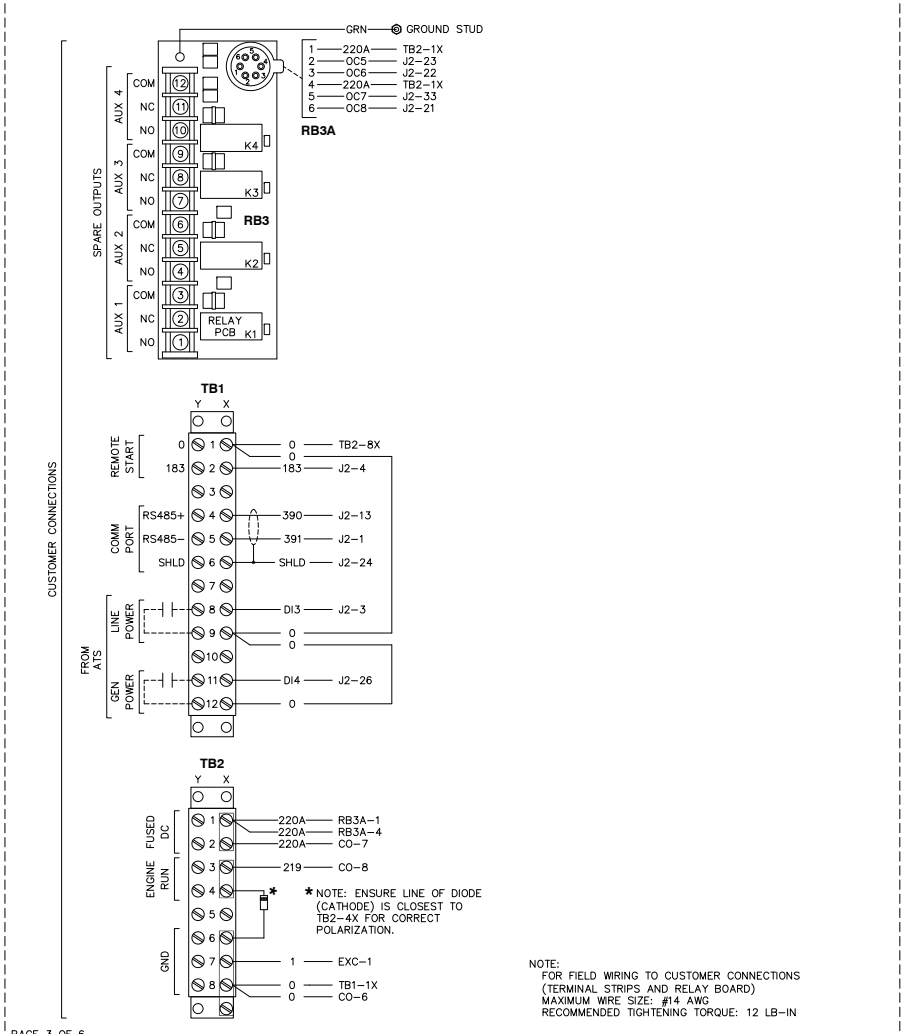

REVISION: H-9136-D
DATE: 6/8/11

WIRING - DIAGRAM
D8.7L/D10.3L/D12.9L G17 24V
DRAWING #: 0H9867

COMPONENTS LOCATED IN CONTROL PANEL

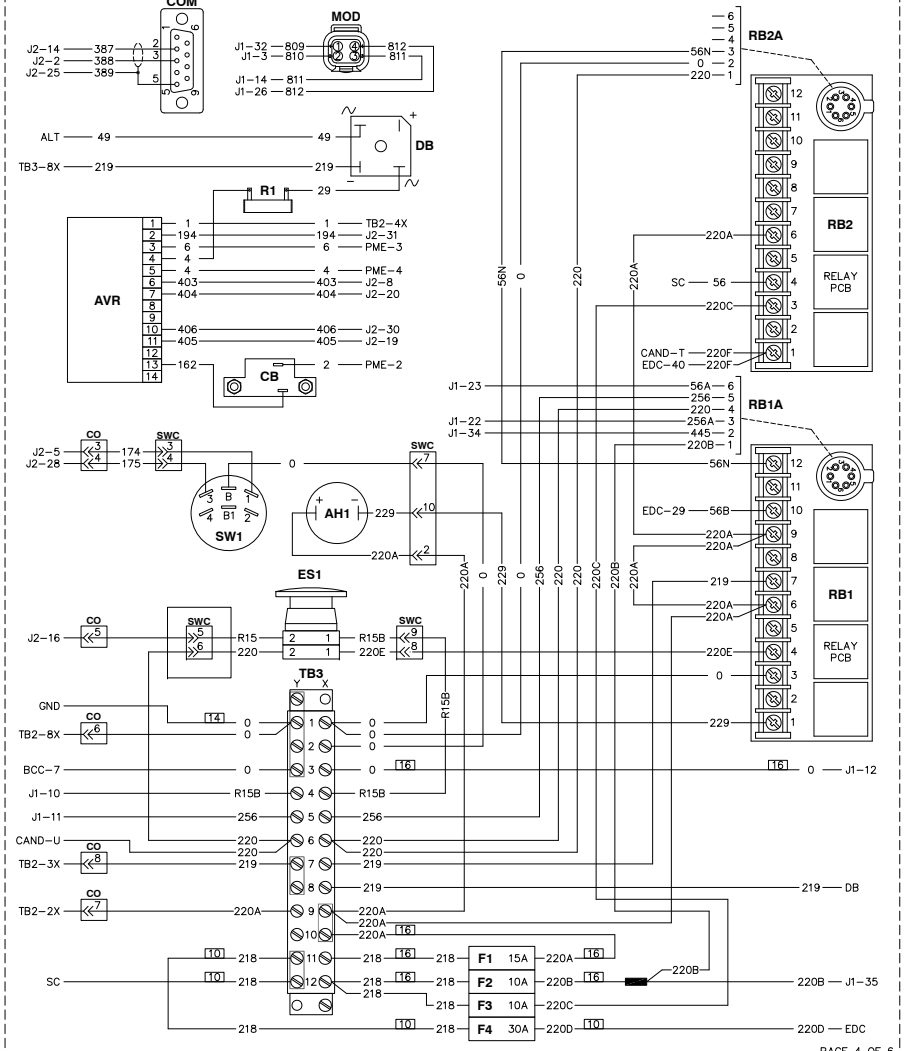

REVISION: H-9136-D
DATE: 6/8/11

WIRING - DIAGRAM
D8.7L/D10.3L/D12.9L G17 24V
DRAWING #: 0H9867

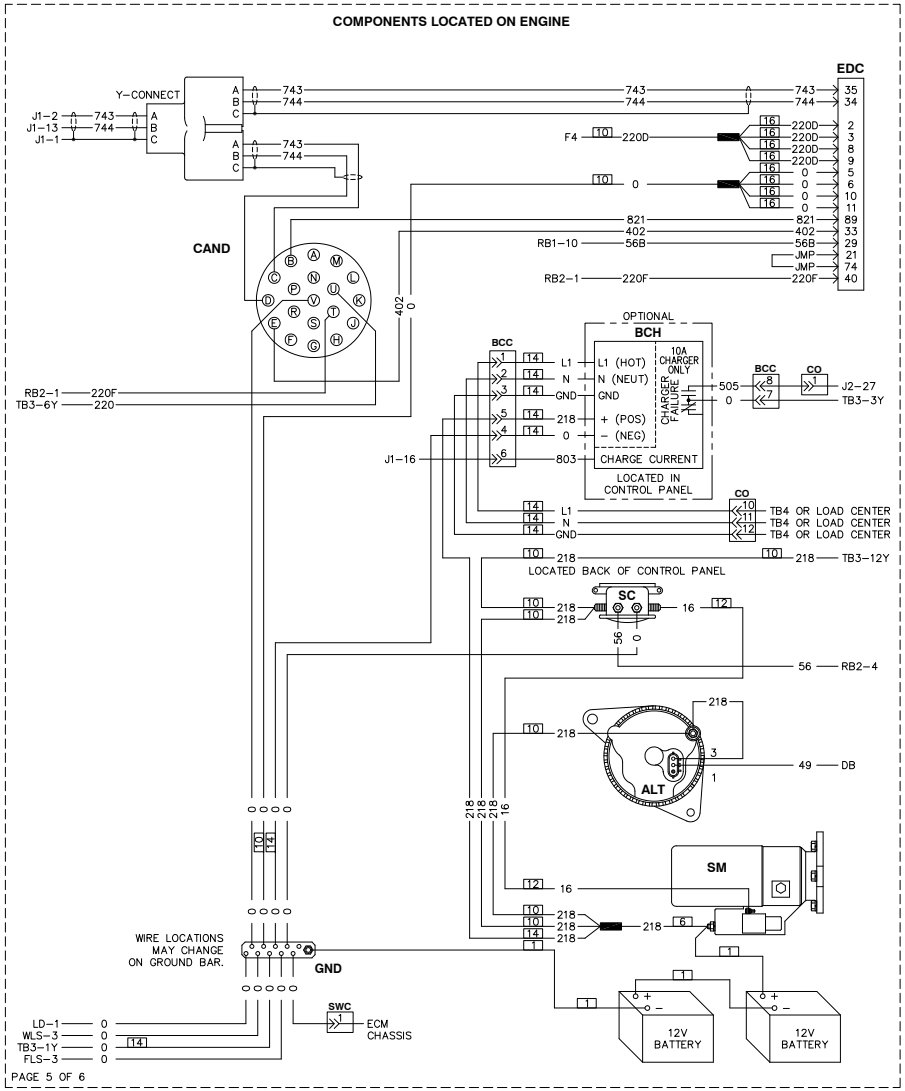

EVISION: H-9136-D
ATE: 6/8/11

WIRING - DIAGRAM
D8.7L/D10.3L/D12.9L G17 24V
DRAWING #: 0H9867

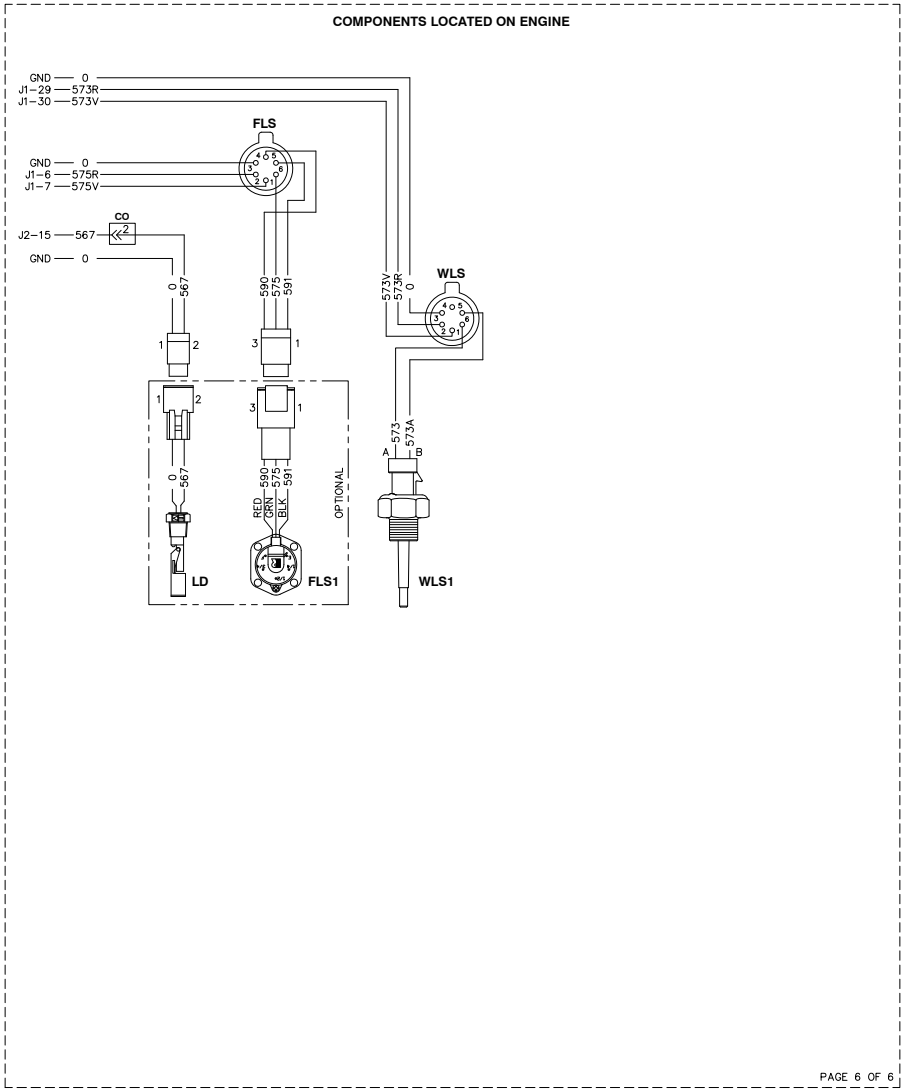

REVISION: H-9136-D
DATE: 6/8/11

WIRING - DIAGRAM
D8.7L/D10.3L/D12.9L G17 24V
DRAWING #: 0H9867

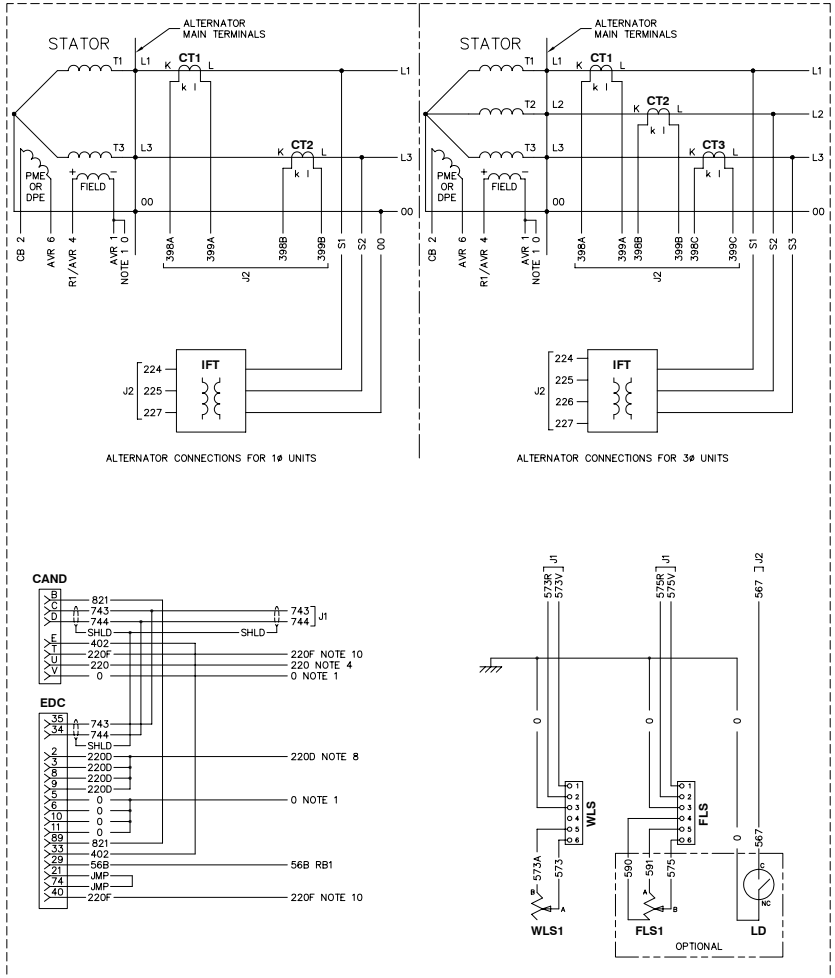

SCHEMATIC - DIAGRAM
D8.7L/D10.3L/D12.9L G17 24V
DRAWING #: 0H9868

REVISION: -A-
DATE: 7/9/10

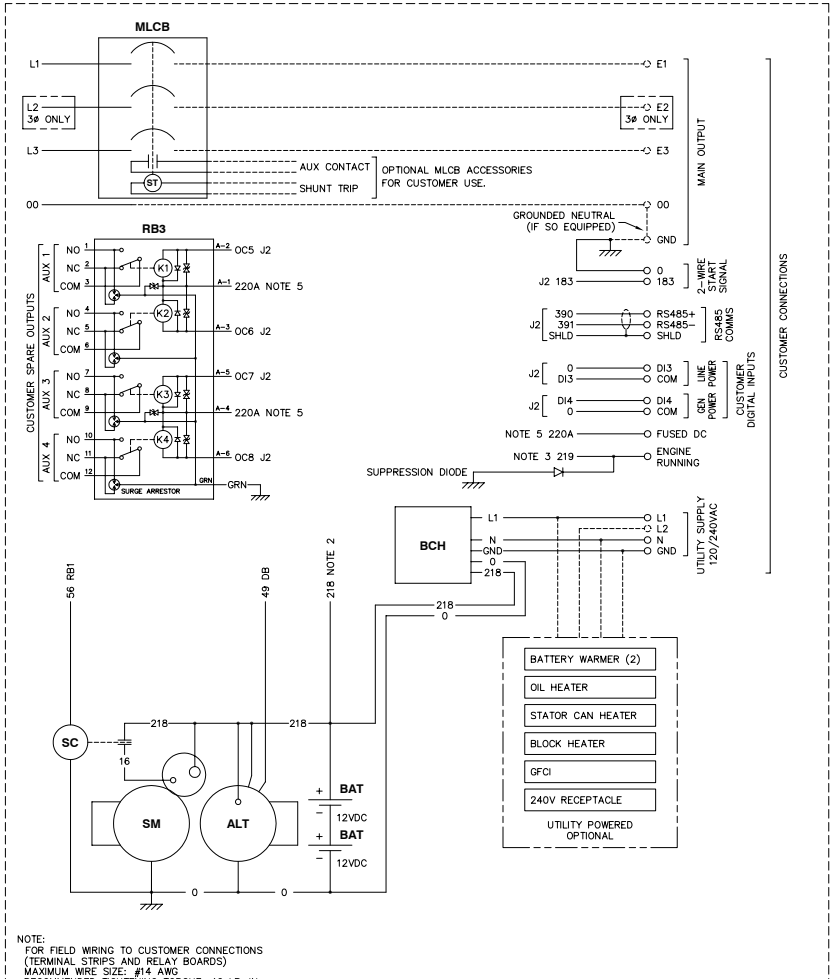

NOTE:
FOR FIELD WIRING TO CUSTOMER CONNECTIONS
(TERMINAL STRIPS AND RELAY BOARDS)
MAXIMUM WIRE SIZE: #14 AWG
RECOMMENDED TIGHTENING TORQUE: 12 LB-IN

SCHEMATIC - DIAGRAM
D8.7L/D10.3L/D12.9L G17 24V
DRAWING #: 0H9868

REVISION: -A-
DATE: 7/9/10

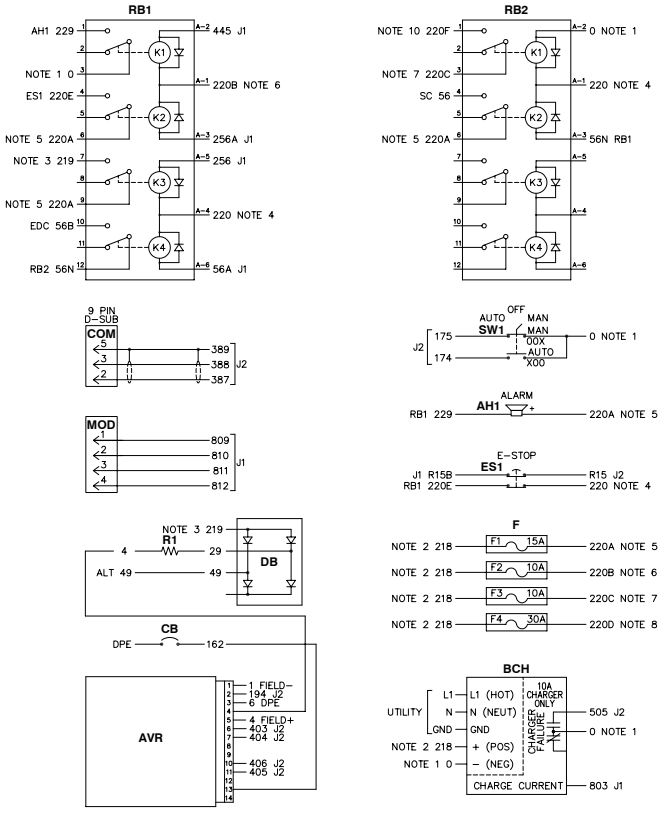

LEGEND

00 – NEUTRAL	COM – COMMUNICATION CONNECTOR	GFCI – GROUND FAULT CIRCUIT INTERRUPT
AH1 – ALARM HORN	CT_ – CURRENT TRANSFORMER	IFT – INTERFACE TRANSFORMER
ALT – DC CHARGE ALTERNATOR	DB – DIODE BRIDGE	J_ – ENGINE CONTROL MODULE CONN.
AVR – AUTO VOLTAGE REGULATOR	DPE – EXCITER	LD – LEAK DETECTOR
BAT – BATTERY	EDC – ENGINE DIGITAL CONTROL	MLCB – MAIN LINE CIRCUIT BREAKER
BCH – BATTERY CHARGER	ES1 – EMERGENCY STOP SWITCH	MOD – MODEM CONNECTOR
CAND – CAN BUS DIAGNOSTIC CONN.	F_ – FUSE	PME – PERMANENT MAGNET EXCITER
CB – CIRCUIT BREAKER	FLS_ – FUEL LEVEL SENDER	R1 – RESISTOR

RB_ – RELAY BOARD
SC – STARTER CONTACTOR
SM – STARTER MOTOR
SW1 – OFF/AUTO/MANUAL SWITCH
WLS_ – COOLANT LEVEL SENDER

SCHEMATIC - DIAGRAM
D8.7L/D10.3L/D12.9L G17 24V
DRAWING #: 0H9868

REVISION: -A-
DATE: 7/9/10

AVR CONNECTOR

PIN	WIRE	TO	FUNCTION
1	1	FIELD	– FIELD
2	194	J2–31	+12VDC
3	6	DPE	DPE OUTPUT
4	4	R1/FIELD	+ FIELD
5	4	R1/FIELD	+ FIELD
6	403	J2–8	GATE TRIGGER B
7	404	J2–20	GATE TRIGGER A
10	406	J2–30	ZERO CROSSING I/P
11	405	J2–19	GROUND (ISO)
13	162	CB	DPE OUTPUT (AFTER CB)

EDC CONNECTOR

PIN	WIRE	TO	FUNCTION
2	220D	F4	NOTE 8
3	220D	F4	NOTE 8
5	0	GND	NOTE 1
6	0	GND	NOTE 1
8	220D	F4	NOTE 8
9	220D	F4	NOTE 8
10	0	GND	NOTE 1
11	0	GND	NOTE 1
21	JMP	EDC–74	EDC JUMPER CONNECTION
29	56B	RB1–10	ENGINE START COMMAND INPUT
33	402	CAND–E	EDC TACHOMETER OUTPUT
34	744	CAND–D/J1–13	CAN BUS LOW
35	743	CAND–C/J1–2	CAN BUS HIGH
40	220F	RB2–1	NOTE 10
74	JMP	EDC–21	EDC JUMPER CONNECTION
89	821	CAND–B	ISO DIAGNOSTIC K–LINE

CAND CONNECTOR

PIN	WIRE	TO	FUNCTION
B	821	EDC–89	ISO DIAGNOSTIC K–LINE
C	743	EDC–35/J1–2	CAN BUS HIGH
D	744	EDC–34/J1–13	CAN BUS LOW
E	402	EDC–33	EDC TACHOMETER OUTPUT
T	220F	RB2–1	NOTE 10
U	220	–	NOTE 4
V	0	GND	NOTE 1

ENGINE CONTROL MODULE CONNECTIONS

J1

PIN	WIRE	TO	FUNCTION
1	SHLD	–	CAN BUS DRAIN
2	743	EDC–35/CAND–C	CAN BUS HIGH
3	810	MOD–2	MODEM SIGNAL RETURN
6	575R	FLS–2	FUEL LEVEL RTN
7	575V	FLS–1	FUEL LEVEL +
10	R15B	ES1	OVERSPEED/WATCHDOG
11	256	RB1A–5	FUEL RELAY
12	0	GND	NOTE 1
13	744	EDC–34/CAND–D	CAN BUS LOW
14	811	MOD–3	MODEM DATA CARRIER DETECT
16	803	BCH	BAT CHARGER CURRENT
22	256A	RB1A–3	ENGINE ECU POWER RELAY
23	56A	RB1A–6	STARTER RELAY
26	812	MOD–4	MODEM ENABLE
29	573R	WLS–2	COOLANT LVL RTN
30	573V	WLS–1	COOLANT LVL +
32	809	MOD–1	MODEM 12V POWER
34	445	RB1A–2	ALARM RELAY
35	220B	F2	NOTE 6

J2

	PIN	WIRE	TO	FUNCTION
	1	391	CUST CON	RS485– (XFER SW)
	2	388	COM–3	RS232 TX (GENLINK)
	3	DI3	CUST CON	SPARE IN 3/LINE PWR
	4	183	CUST CON	REMOTE START
	5	174	SW1	"AUTO" START
	6	224	IFT	V SENSE GEN A PH
	7	227	IFT	V SENSE RTN
	8	403	AVR–6	AVR GATE TRIGGER B
*	9	399C	CT3	GEN C PH CURRENT –
*	10	398C	CT3	GEN C PH CURRENT +
	11	399A	CT1	GEN A PH CURRENT –
	12	398A	CT1	GEN A PH CURRENT +
	13	390	CUST CON	RS485+ (XFER SW)
	14	387	COM–2	RS232 RX (GENLINK)
	15	567	LD	LEAK DETECTOR
	16	R15	ES1	EMERGENCY STOP
*	17	226	IFT	V SENSE GEN C PH
	19	405	AVR–11	AVR GROUND
	20	404	AVR–7	AVR GATE TRIGGER A
	21	OC8	RB3A–6	SPARE OUTPUT 4
	22	OC6	RB3A–3	SPARE OUTPUT 2
	23	OC5	RB3A–2	SPARE OUTPUT 1
	24	SHLD	CUST CON	RS485 DRAIN (XFER SW)
	25	389	COM–5	RS232 COM (GENLINK)
	26	DI4	CUST CON	SPARE IN 4/GEN PWR
	27	505	BCH	BAT CHARGER FAIL
	28	175	SW1	"MANUAL" START
	29	225	IFT	V SENSE GEN B PH
	30	406	AVR–10	AVR ZERO CROSSING I/P
	31	194	AVR–2	AVR +12VDC
	33	OC7	RB3A–5	SPARE OUTPUT 3
	34	399B	CT2	GEN B PH CURRENT–
	35	398B	CT2	GEN B PH CURRENT+

* – CONNECTIONS NOT USED IN 1ø UNITS.

NOTES:

1) WIRE# 0 IS CHASSIS GROUND (BATTERY–) UNLESS NOTED OTHERWISE.
2) WIRE# 218 IS UNFUSED +24VDC (BATTERY+).
3) WIRE# 219 IS FUSED +24VDC WHEN GENERATOR IS CRANKING OR RUNNING.
4) WIRE# 220 IS FUSED +24VDC WHEN E–STOP IS NOT ACTIVATED.
5) WIRE# 220A IS FUSED +24VDC FOR GENERAL USE.
6) WIRE# 220B IS FUSED +24VDC FOR THE GENERATOR CONTROL MODULE.
7) WIRE# 220C IS FUSED +24VDC TO SOURCE SWITCHED POWER FOR ENGINE CONTROL UNIT
8) WIRE# 220D IS FUSED +24VDC FOR ENGINE CONTROL UNIT.
9) WIRE# 220E IS FUSED +24VDC CONTROLLED BY GENERATOR CONTROL MODULE PRIOR TO E–STOP.
10) WIRE# 220F IS FUSED +24VDC CONTROLLED BY GENERATOR CONTROL MODULE TO SWITCH ENGINE CONTROL UNIT.

SCHEMATIC - DIAGRAM
D8.7L/D10.3L/D12.9L G17 24V
DRAWING #: 0H9868

REVISION: -A-
DATE: 7/9/10

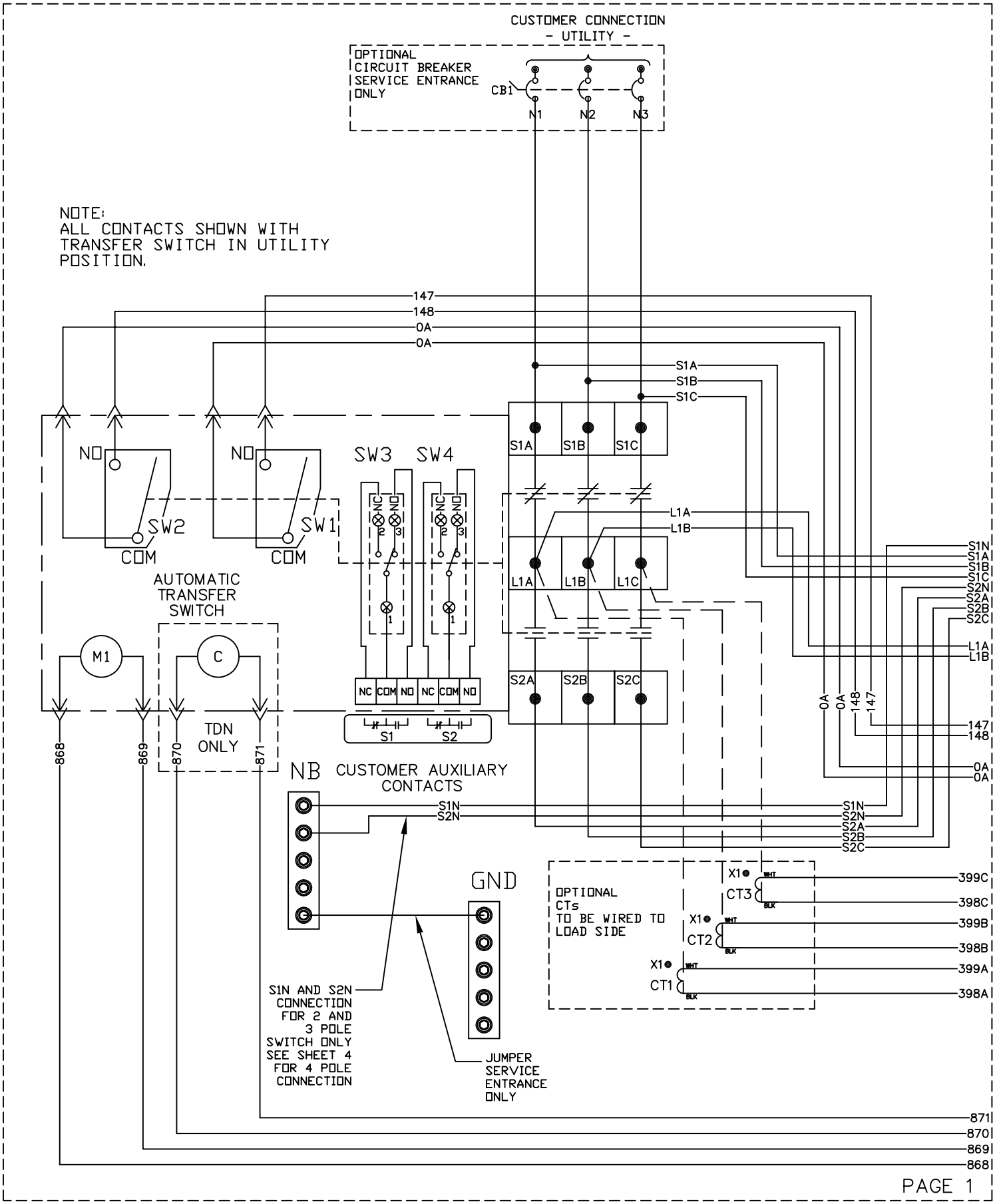

SCHEMATIC - DIAGRAM

TX CONTROL TRANSFER SW

REVISION: CN-0040082D

DATE: 8/17/20

DRAWING #: A00003475

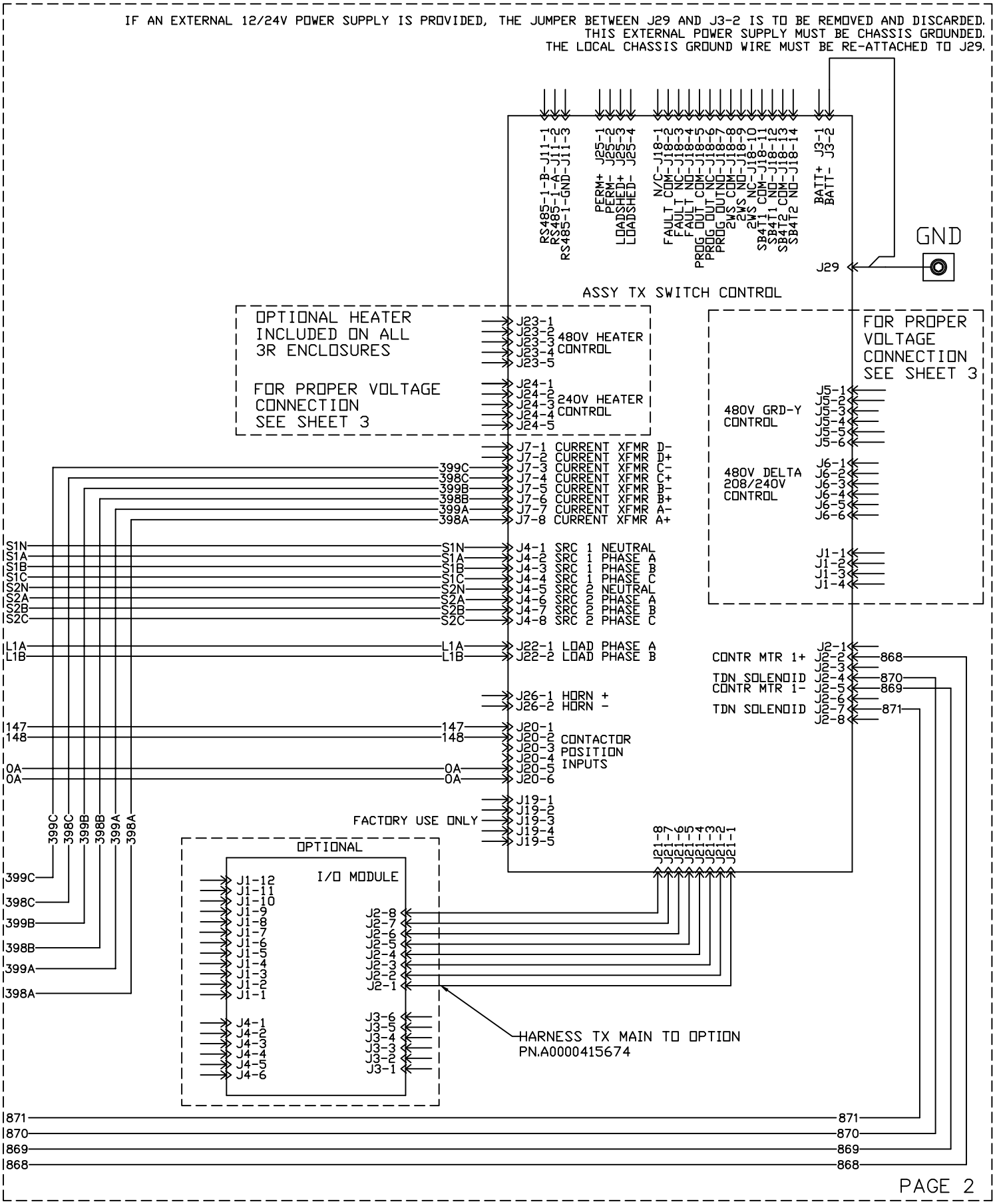

SCHEMATIC - DIAGRAM

TX CONTROL TRANSFER SW

REVISION: CN-0040082D

DATE: 8/17/20

DRAWING #: A00003475

480V GRD-Y CONTROL

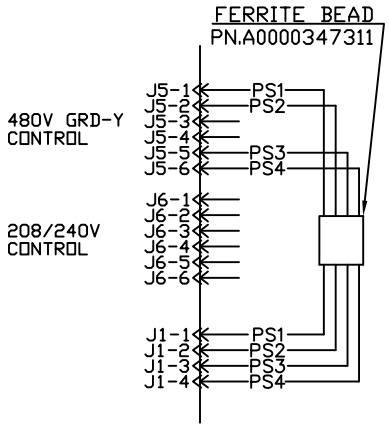

208/240V CONTROL

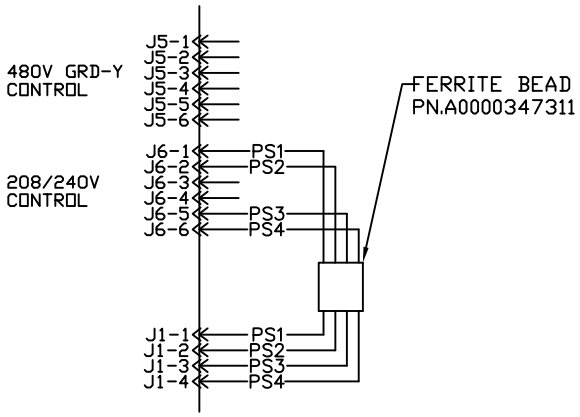

480V 3 WIRE CONNECTION WITH TRANSFORMERS

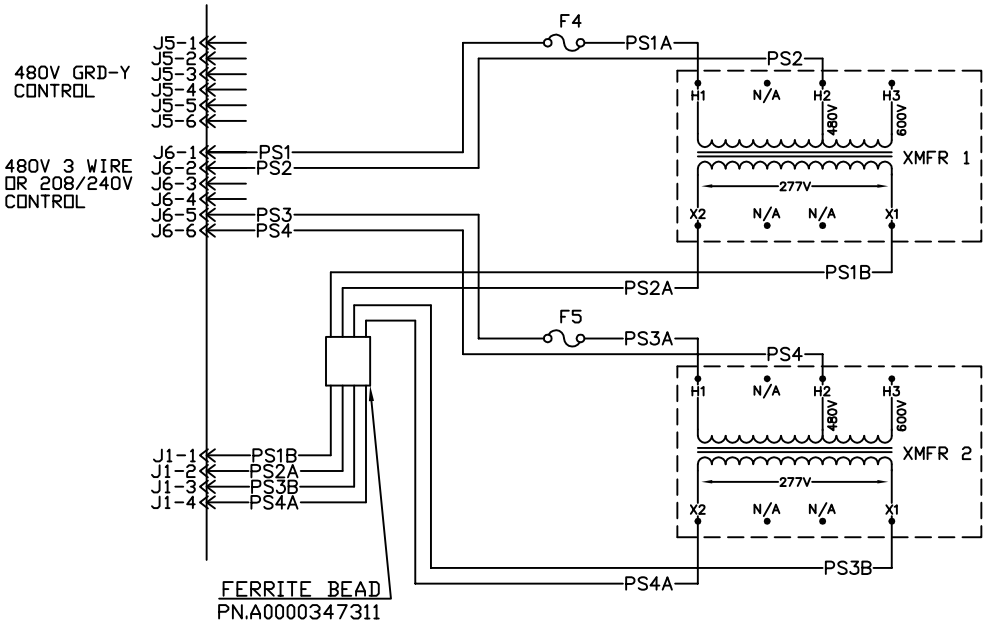

480V HEATER CONTROL

OPTIONAL HEATER
INCLUDED ON ALL 3R ENCLOSURES

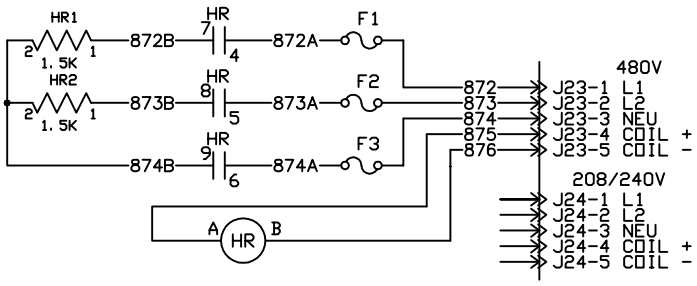

208/240V HEATER CONTROL

OPTIONAL HEATER
INCLUDED ON ALL 3R ENCLOSURES

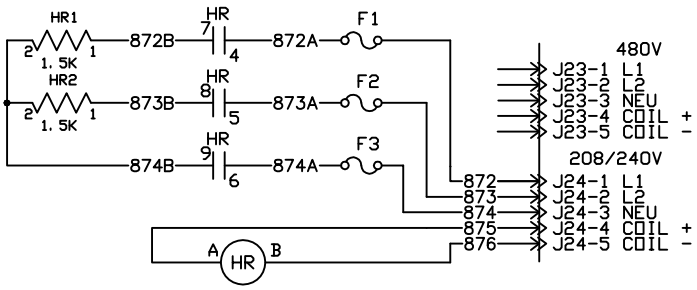

PAGE 3

SCHEMATIC - DIAGRAM

TX CONTROL TRANSFER SW

4 POLE SWITCHED NEUTRAL CONNECTIONS

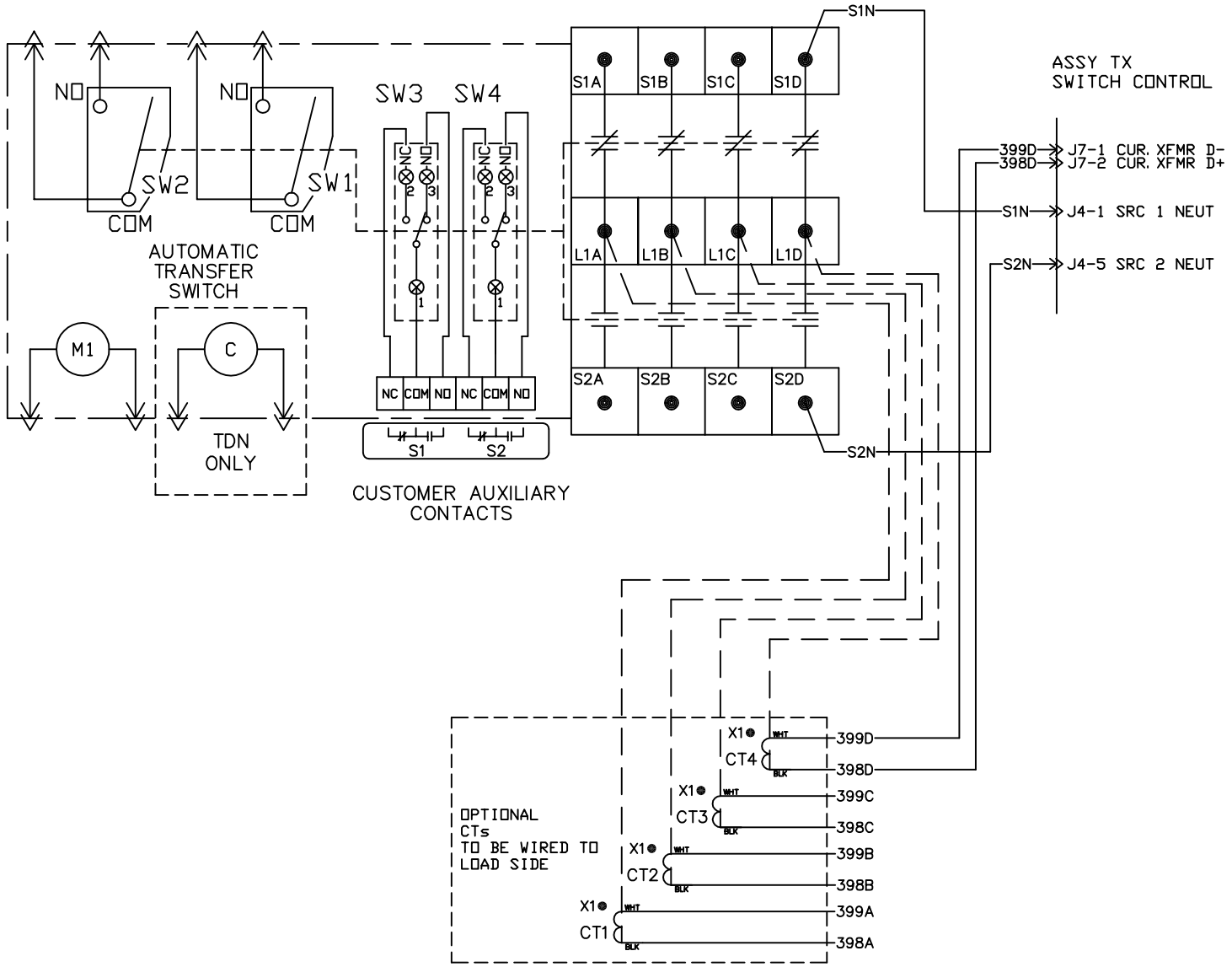

PAGE 4

SCHEMATIC - DIAGRAM

TX CONTROL TRANSFER SW

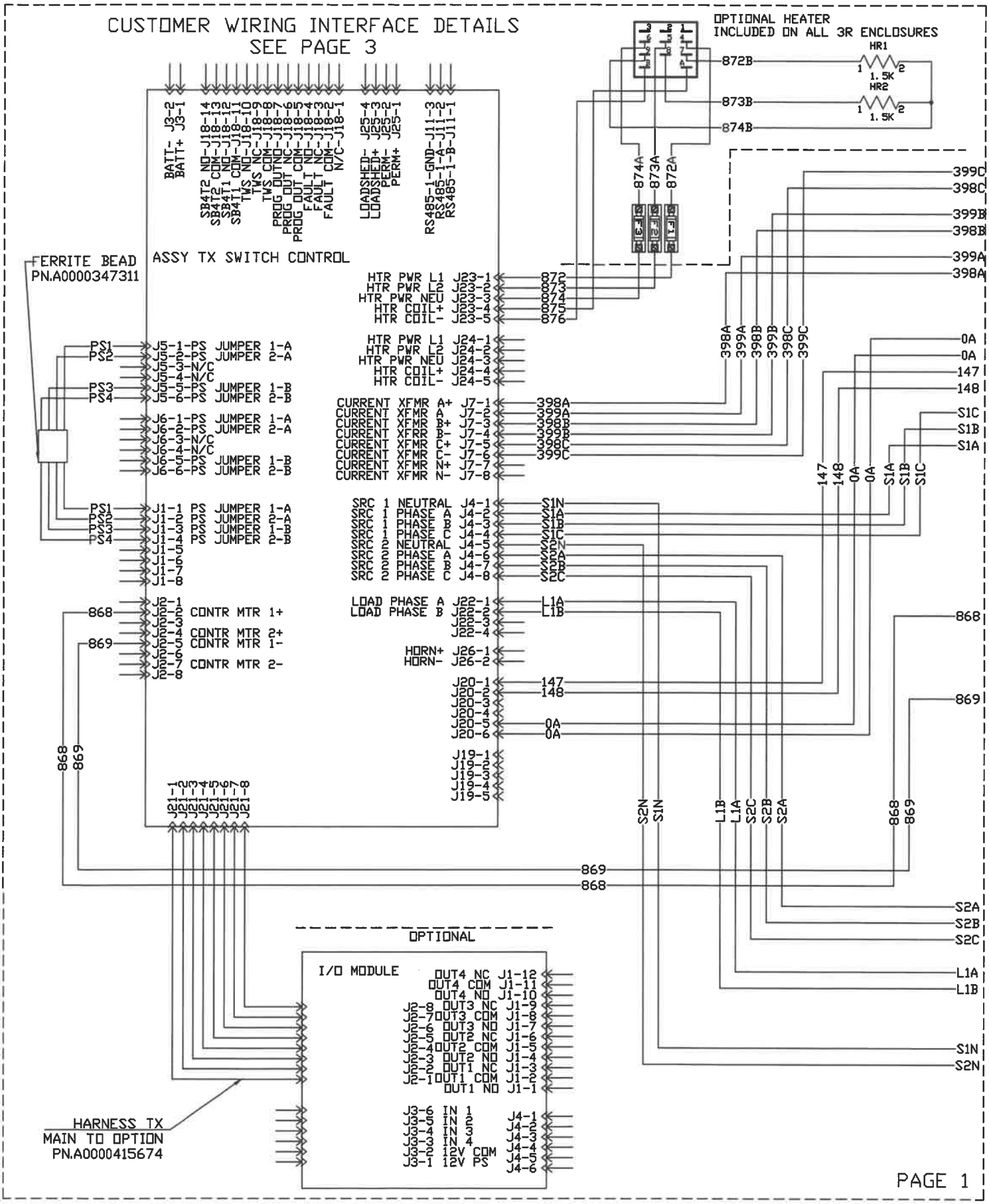

WIRING - DIAGRAM

TX CONTROL TRANSFER SW

DRAWING #: A0000347534

REVISION: A

DATE: 1/29/20

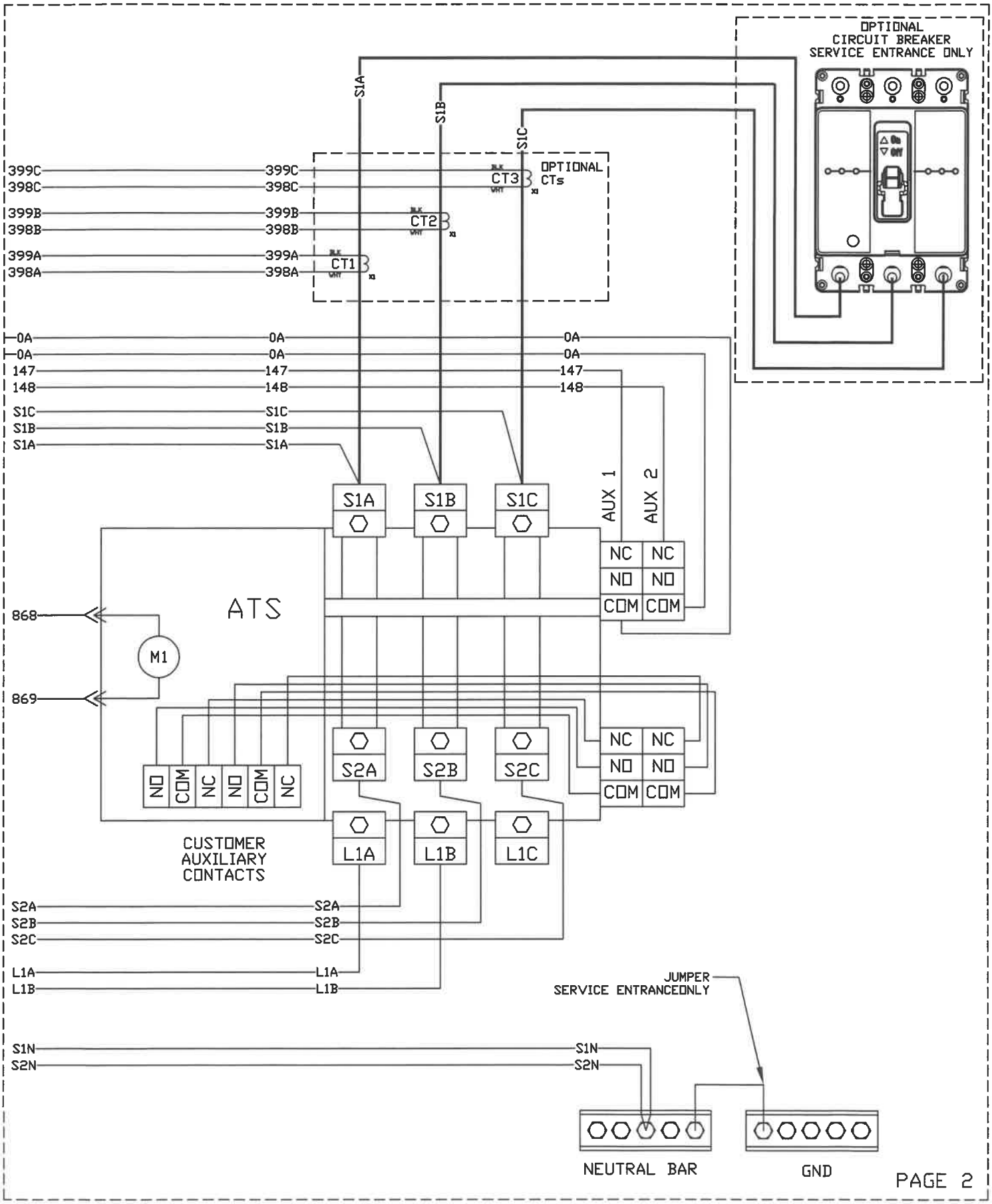

WIRING - DIAGRAM

TX CONTROL TRANSFER SW

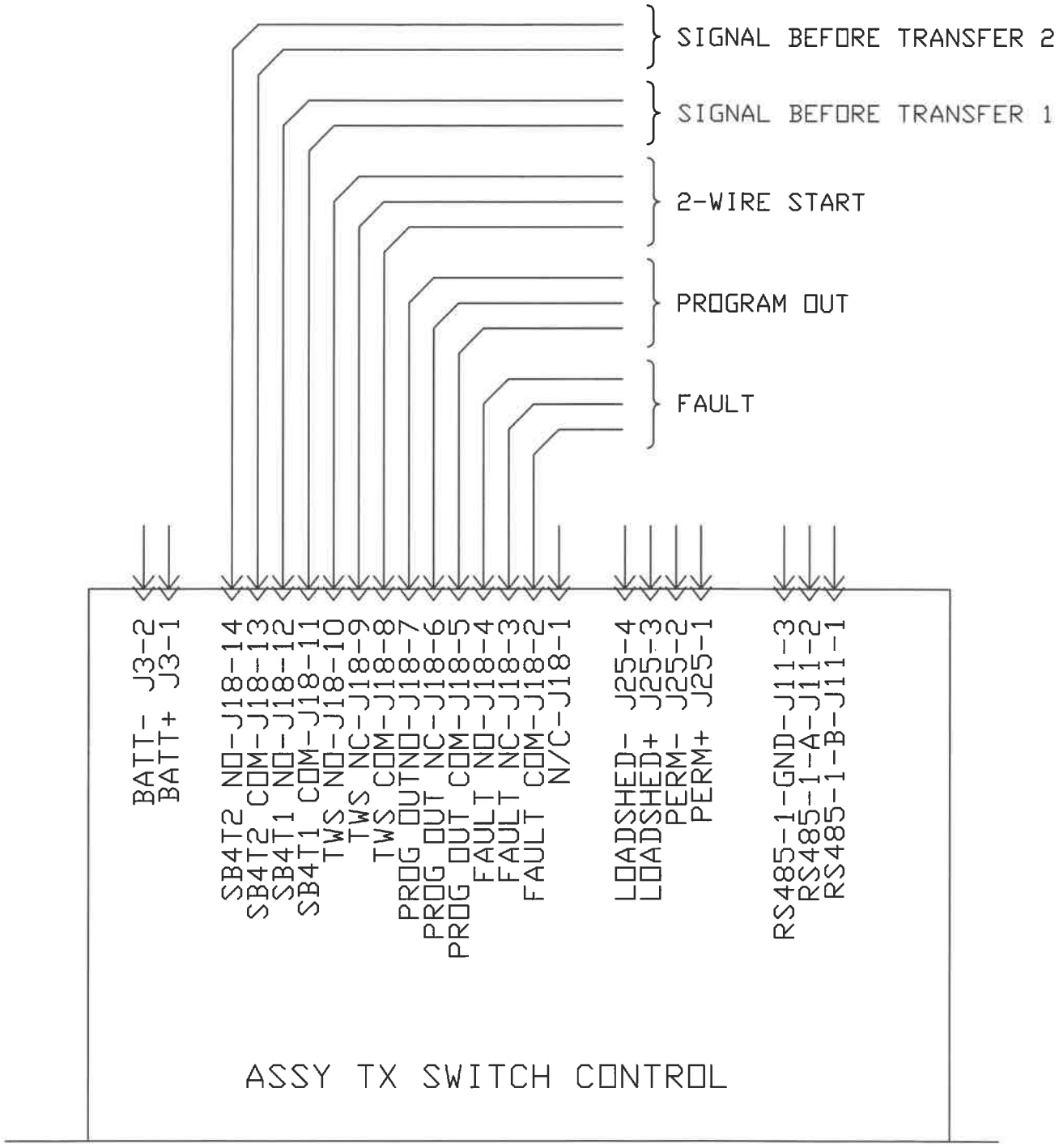
SIGNAL BEFORE TRANSFER 2
SIGNAL BEFORE TRANSFER 1
2-WIRE START
PROGRAM OUT
FAULT
BATT- J3-2
BATT+ J3-1
SB4T2 NO-J18-14
SB4T2 COM-J18-13
SB4T1 NO-J18-12
SB4T1 COM-J18-11
TWS NO-J18-10
TWS NC-J18-9
TWS COM-J18-8
PROG OUT NO-J18-7
PROG OUT NC-J18-6
PROG OUT COM-J18-5
FAULT NO-J18-4
FAULT NC-J18-3
FAULT COM-J18-2
N/C-J18-1
LOADSHED- J25-4
LOADSHED+ J25-3
PERM- J25-2
PERM+ J25-1
RS485-1-GND-J11-3
RS485-1-A-J11-2
RS485-1-B-J11-1
ASSY TX SWITCH CONTROL

PAGE 3

THIS PAGE INTENTIONALLY LEFT BLANK.

PAGE 4

H-PANEL CONTROL INTERCONNECTIONS

Notes:

1. Spare Outputs are Standard on Industrial Product Only. GenLink® Required for Programming. Contacts Rated at 5A at 30VAC/30VDC
2. TB4 Max Wire Size: #10 AWG, Recommended Tightening Torque: 14 LB-IN
3. TB1, TB2, TB9 & RB3 Max Wire Size: #14 AWG, Recommended Tightening Torque: 12 LB-IN
4. Refer to H-Panel Manual for Instructions on Enabling HTS Transfer Switch. Refer to HTS Transfer Switch Manual for Dip Switch Settings for Multiple HTS Application
5. Connect the RS-485 Overall Shield at Genset Connection Terminal Only

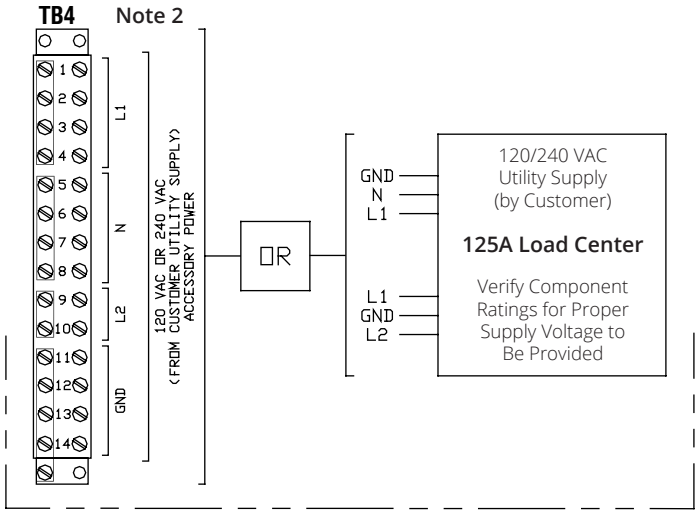

High Voltage Connection Panel

GTS or HTS Transfer Switch

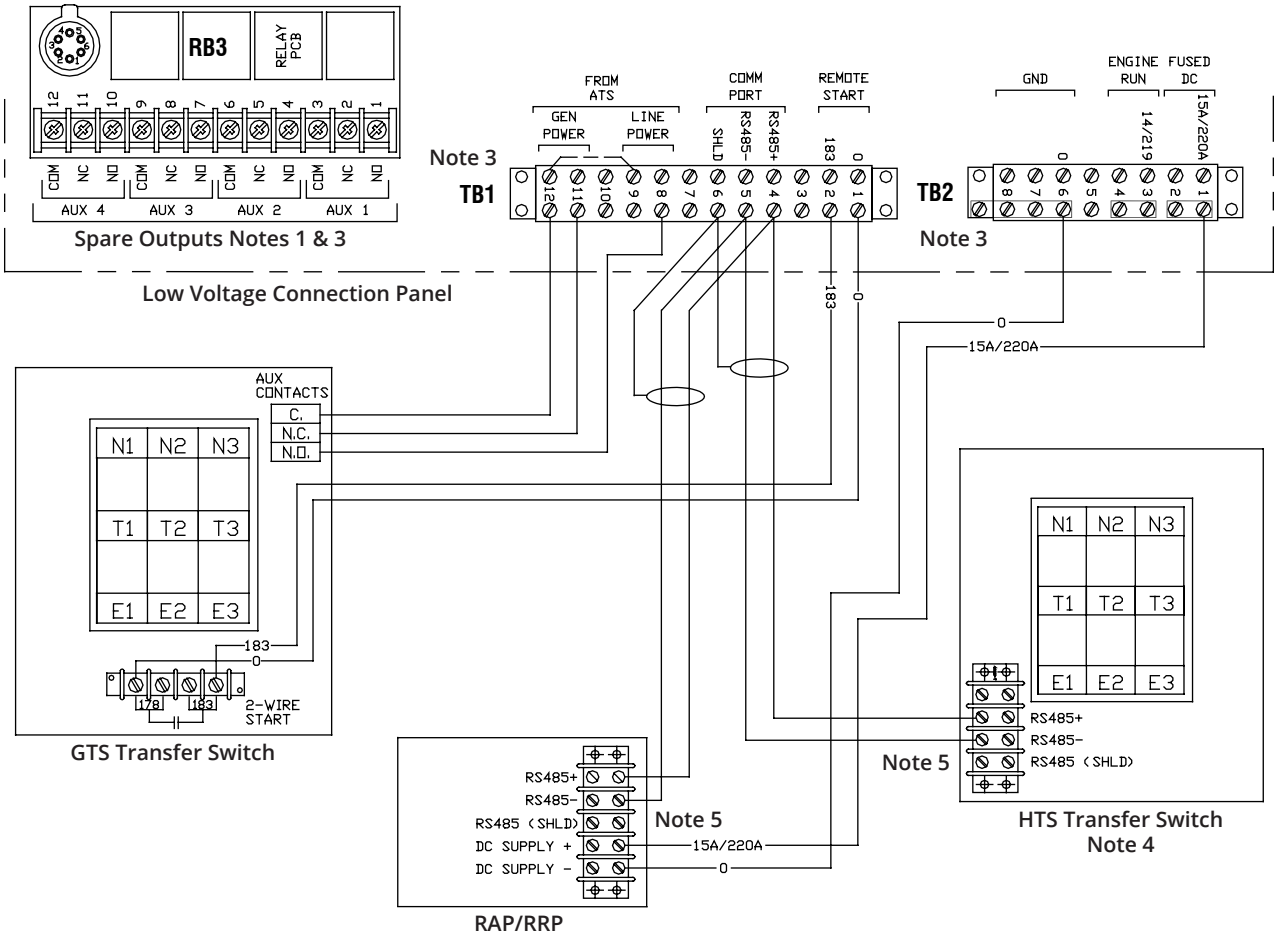

H-PANEL CONTROL INTERCONNECTIONS

TX Transfer Switch

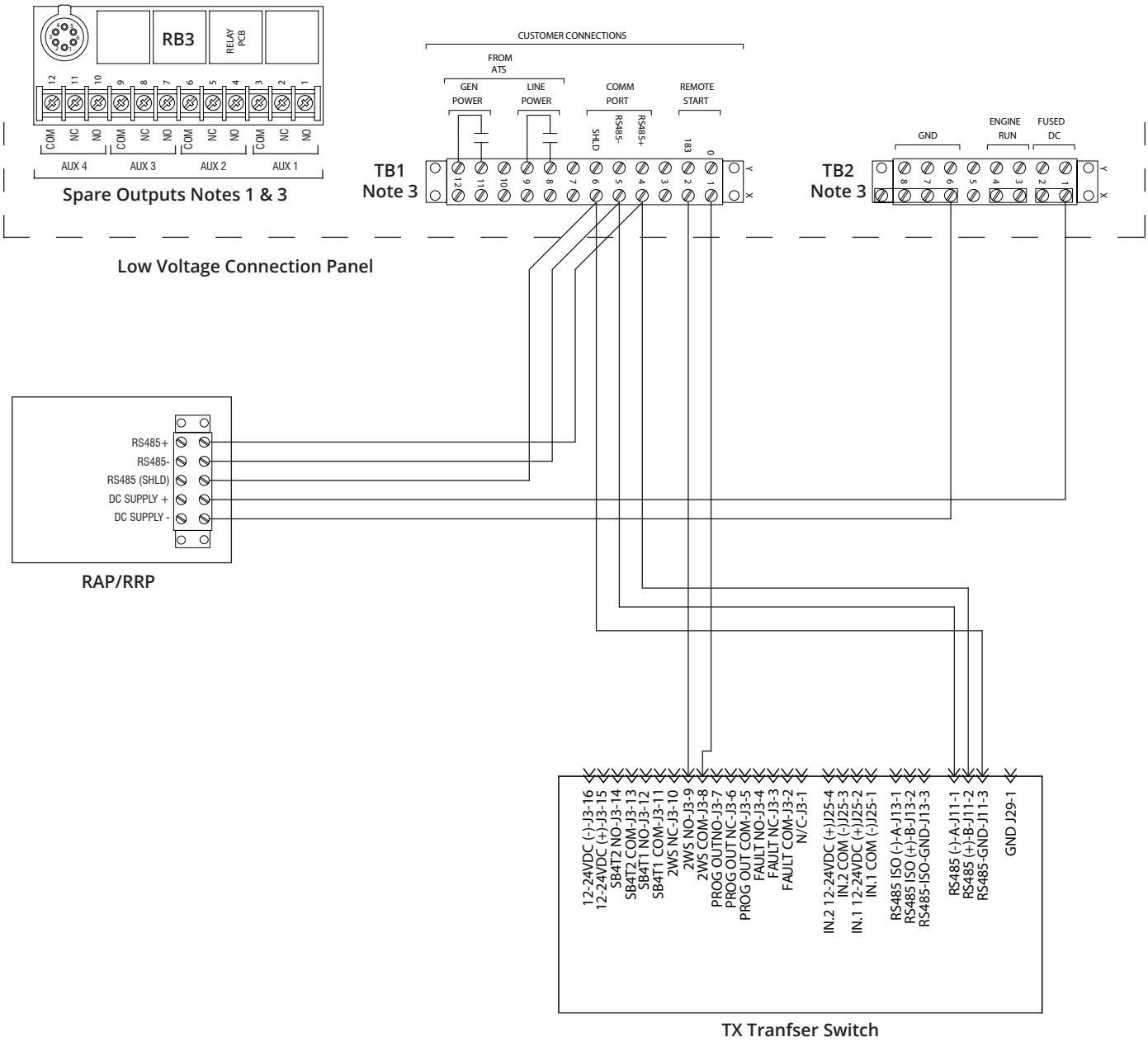

 © 2023 Generac Power Systems, Inc. All rights reserved. All specifications are subject to change without notice.

LEVEL 2 ACOUSTIC ENCLOSURE
SD275 10.3L IVECO

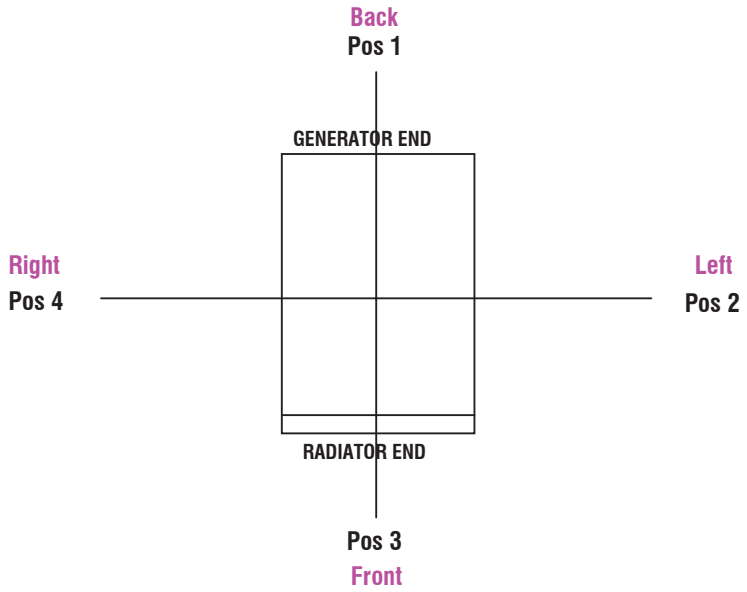

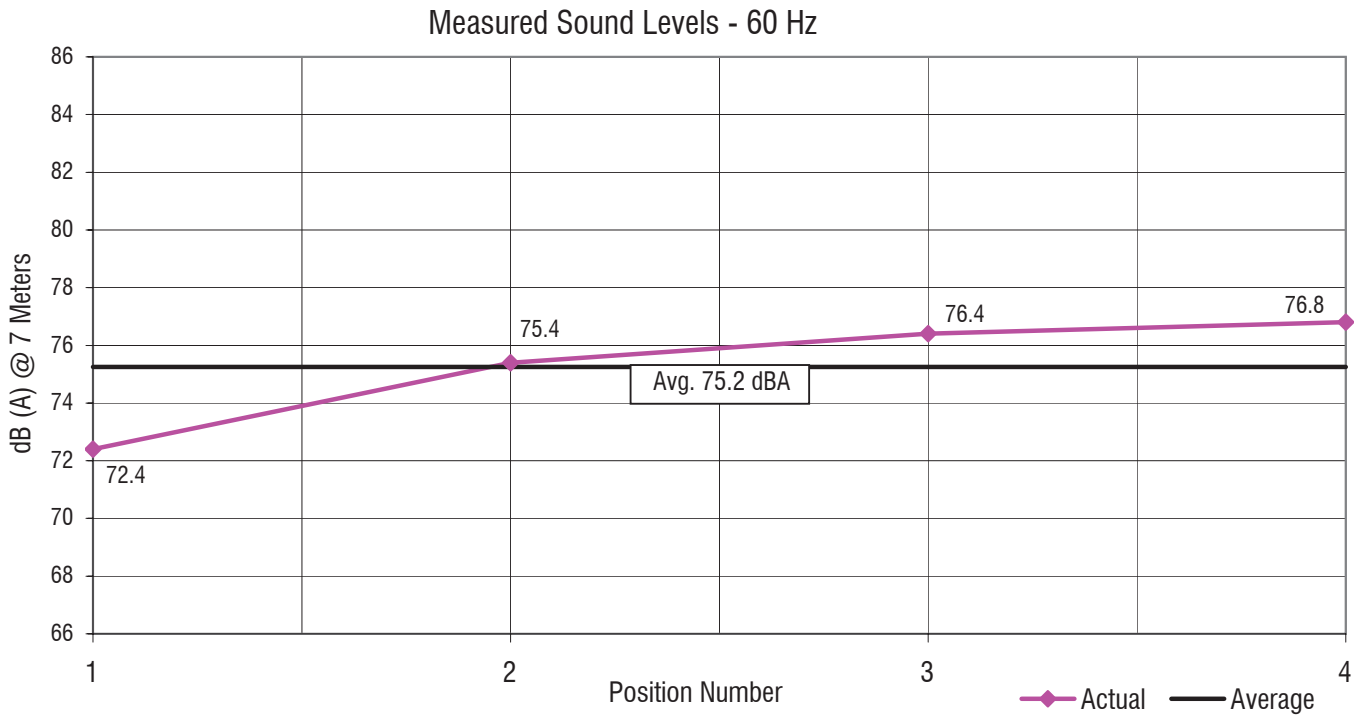

Notes:

1. All positions 23 ft (7M) from side faces of generator set.
2. Generator operating at full load.
3. Test conducted on a 100 foot diameter asphault surface.
4. Non-enclosed sets do not include exhaust sound during testing.

 © 2015 Generac Power Systems, Inc. All rights reserved. All specifications are subject to change without notice.

STATEMENT OF EXHAUST EMISSIONS
2023 FPT Diesel Fueled Generator

The measured emissions values provided here are proprietary to Generac and it's authorized dealers. This information may only be disseminated upon request to regulatory governmental bodies for emissions permitting purposes or to specifying organizations as submittal data when expressly required by project specifications, and shall remain confidential and not open to public viewing. This information is not intended for compilation or sales purposes and may not be used as such, nor may it be reproduced without the expressed written permission of Generac Power Systems, Inc.. The data provided shall not be meant to include information made public by Generac.

Generator Model:	**SD275**	EPA Certificate Number:	**PFPXL10.3TR3-032**
kW_e Rating:	**275**	CARB Certificate Number:	**Not Applicable**
Engine Family:	**PFPXL10.3TR3**	SCAQMD CEP Number:	**511713**
Engine Model:	**F3AE9685A-E**	Emission Standard Category:	**Tier 3**
Rated Engine Power (BHP)*:	**449**	Certification Type:	**Stationary Emergency CI (40 CFR Part 60 Subpart IIII)**
Fuel Consumption (gal/hr)*:	**22.1**		
Aspiration:	**Turbocharged/Aftercooled**		
Rated RPM:	**1,800**		

*Engine power are declared by the engine manufacturer of record and the U.S EPA.

Emissions Based on Engine Power of Specific Engine Model
These Values are Actual Composite Weighted Exhaust Emissions Results Over the EPA 5-Mode Test Cycle

CO	NOx + NMHC	PM	
1.3	**3.80**	**0.11**	Grams/kW-hr
0.97	**2.83**	**0.08**	Grams/bhp-hr

These Values are 100% Load Data Exhaust Emissions Results.

CO	NOx + NMHC	PM	
0.98	**3.3**	**0.02**	Grams/kW-hr
0.73	**2.46**	**0.01**	Grams/bhp-hr

- The stated values are actual exhaust emission test measurements obtained from an engine representative of the type described above.
- Values based on 5-Mode testing are official data of record as submitted to regulatory agencies for certification purposes. Testing was conducted in accordance with prevailing EPA protocol, which is typically accepted by SCAQMD and other regional authorities.
- No emissions values provided above are to be construed as guarantees of emission levels for any given Generac generator unit.
- Generac Power Systems, Inc. reserves the right to revise this information without prior notice.
- Consult state and local regulatory agencies for specific permitting requirements.
- The emission performance data supplied by the equipment manufacturer is only one element required toward completion of the permitting and installation process. State and local regulations may vary on a case-by-case basis and local agencies must be consulted by the permit application/equipment owner prior to equipment purchase or installation. The data supplied herein by Generac Power Systems Inc. cannot be construed as a guarantee of installability of the generating set.

 © 2023 Generac Power Systems, Inc. All rights reserved. All specifications are subject to change without notice.

Certification of Quality

Generac Power Systems certifies that the products we manufacture have been built and tested in accordance with strict internal and external standards for quality. Our quality management system has been registered with the internationally recognized ISO 9001:2008 standard and our products comply with external standards that include, but are not limited to, CSA, NEMA, EGSA, ISO, and UL.

The Generac Quality Management System (GQMS) ensures the highest standards of quality at every level of production, from raw materials to the finished product. This includes receiving inspection, in-process checks, product and process audits, testing, final inspections, and shipping standards.

Tests of our products are performed in accordance with our internal procedures and controlled through the GQMS to ensure accuracy and effectiveness. The testing process and product designs comply with external standards which may include, but are not limited to: ISO 8528-5, ISO 3046, NFPA 99, NFPA 110, BS 5514, SAE J1349, and DIN 6271.

Generac Power Systems has over one million square feet of manufacturing space and over 2000 employees dedicated to designing and manufacturing power generation equipment in our multiple State of Wisconsin, USA factories. All of our installed and mobile generators are built with pride by our skilled American workforce to ensure our customers receive the quality that they expect from Generac.

We are committed to producing quality products for both our internal and external customers. We will continuously improve our processes and diligently measure all aspects of our business.

Daniel Waschow

Vice President of Quality
Generac Power Systems, Inc.
Waukesha, Wisconsin USA

 © 2015 Generac Power Systems, Inc. All rights reserved. All specifications are subject to change without notice.

Generac Power Systems 2 Year (2B) Limited Warranty for Industrial Transfer Switch Systems

For the period of warranty noted below, which begins upon the successful start-up and/or on-line activation/registration of the unit, Generac Power Systems, Inc. "Generac" warrants that its transfer switch will be free from defects in material and workmanship for the items and period set forth below. Generac will, at its discretion, repair or replace any part(s) which, upon evaluation, inspection and testing by Generac or an Independent Authorized Service Dealer, is found to be defective. Any equipment that the purchaser/owner claims to be defective must be evaluated by the nearest Independent Authorized Service Dealer.

Warranty Coverage in Year(s): 1	Warranty Coverage in Year(s): 2
Parts, Labor and Limited Travel	Limited Parts Only

Guidelines:

1. Unit must be registered and proof of purchase available.
2. Any and all warranty repairs and/or concerns must be performed and/or addressed by an Independent Authorized Service Dealer, or branch thereof. Repairs or diagnostics performed by individuals other than Independent Authorized Service Dealers not authorized in writing by Generac will not be covered.
3. Warranty is transferable between ownership of original installation site.
4. Generac may choose to repair, replace or refund a piece of equipment in its sole discretion.
5. Warranty only applies to permanently wired and mounted units.
6. Enclosures are warranted for the first year of ownership only. Damage caused after receipt of generator is the responsibility of the owner and is not covered by this warranty. Nicks, scrapes, dents or scratches to the painted enclosure should be repaired promptly by the owner.
7. Proof of performance of all required maintenance must be available.
8. Travel allowance is limited to 300 miles maximum or seven and a half (7.5) hours maximum (per occurrence, whichever is less) round trip from the nearest Independent Authorized Service Dealer. Any additional travel required will not be covered.

The following will NOT be covered by this warranty:

1. Costs of normal maintenance (i.e. associated part(s), adjustments, installation or start-up).
2. Damage to the transfer switch system caused by accidents, shipping, handling or improper storage.
3. Damage/failures caused by operation with loads or installations other than what's recommended or specified by Generac. Unauthorized modification/misapplication will not be warranted unless authorized by Generac in writing.
4. Rental equipment used while warranty repairs are being performed and/or any extraordinary equipment used for removal and/or reinstallation of transfer switch (i.e. cranes, hoists, lifts, et. al.).
5. Planes, ferries, railroad, buses, helicopters, snowmobiles, snow-cats, off-road vehicles or any other mode of transport deemed not standard by Generac.
6. Failures due to normal wear and tear, accident, misuse, abuse, neglect, improper installation, or improper sizing.
7. Damage to any covered components or consequential damages caused by the use of a non-OEM part will not be covered by this warranty.
8. Damage related to rodent, reptile, and/or insect infestation.
9. Repairs or diagnostics performed by individuals other than Independent Authorized Service Dealers not authorized in writing by Generac.
10. Steel enclosures that rust as a result of improper installation, location in a harsh or salt water environment, or are scratched where the integrity of applied paint is compromised.
11. Fuses, light bulbs and any related labor.
12. Units sold, rated or used for "Prime Power," "Trailer Mounted" or "Rental Unit" applications as defined by Generac. Contact an Independent Authorized Service Dealer for definitions.
13. Failures caused by any act of God or external cause including without limitation, fire, theft, freezing, war, lightning, earthquake, windstorm, hail, water, tornado, hurricane, or any other matters which are reasonably beyond the manufacturer's control.
14. Shipping costs associated with expedited shipping.
15. Any incidental, consequential or indirect damages caused by defects in materials or workmanship, or any delay in repair or replacement of the defective part(s).
16. Any unit built/manufactured prior to 2014 models.
17. Overtime, holiday or emergency labor.
18. Living or travel expenses of person(s) performing service, except as specifically included within the terms of a specific unit warranty period.

THIS WARRANTY SUPERSEDES ALL OTHER WARRANTIES, EXPRESSED OR IMPLIED. SPECIFICALLY, GENERAC MAKES NO OTHER WARRANTIES AS TO MERCHANTABILITY OR FITNESS FOR A PARTICULAR PURPOSE. ANY IMPLIED WARRANTIES WHICH ARE ALLOWED BY LAW, SHALL BE LIMITED IN DURATION TO THE TERMS OF THE EXPRESS LIMITED WARRANTY PROVIDED HEREIN. SOME JURISDICTIONS DO NOT ALLOW LIMITATIONS ON HOW LONG AN IMPLIED WARRANTY LASTS, SO THE ABOVE LIMITATION MAY NOT APPLY TO YOU. GENERAC'S ONLY LIABILITY SHALL BE THE REPAIR OR REPLACEMENT OF PART(S) AS STATED ABOVE. IN NO EVENT SHALL GENERAC BE LIABLE FOR ANY INCIDENTAL OR CONSEQUENTIAL DAMAGES, EVEN IF SUCH DAMAGES ARE A DIRECT RESULT OF GENERAC'S NEGLIGENCE. SOME JURISDICTIONS DO NOT ALLOW THE EXCLUSION OR LIMITATION OF INCIDENTAL OR CONSEQUENTIAL DAMAGES, SO THE ABOVE LIMITATION MAY NOT APPLY TO YOU. THIS WARRANTY GIVES YOU SPECIFIC LEGAL RIGHTS. YOU COULD ALSO HAVE OTHER RIGHTS UNDER APPLICABLE LAW.

FOR AUSTRALIA ONLY: Our goods come with guarantees that cannot be excluded under the Australian Consumer Law. You are entitled to a replacement or refund for a major failure and for compensation for any other reasonably foreseeable loss or damage. You are also entitled to have the goods repaired or replaced if the goods fail to be of acceptable quality and the failure does not amount to a major failure.
FOR NEW ZEALAND ONLY: Nothing in this warranty statement excludes, restricts or modifies any condition, warranty right or remedy which pursuant to the New Zealand Legislation (Commonwealth or State) including the Fair Trading Practices Act of 1986 or the Consumer Guarantees Act 1993 ("CGA") applies to this limited warranty and may not be so excluded, restricted or modified. Nothing in this statement is intended to have the effect of contracting out of the provisions of the CGA, except to the extent permitted by that Act, and these terms are to be modified to the extent necessary to give effect to that intention. If you acquire goods from Generac Power Systems or any of its authorized resellers and distributors for the purposes of a business, then pursuant to section 43(2) of the CGA, it is agreed that the provisions of the CGA do not apply.

GENERAC POWER SYSTEMS, INC. • P.O. BOX 8 • Waukesha, WI, USA 53187
Ph: (888) GENERAC (436-3722) • Fax: (262) 544-4851
To locate the nearest Independent Authorized Service Dealer and to download schematics, exploded views and parts lists
visit our website: www.generac.com

Part No. 0J4302 Revision H (4/21)

Garantía limitada de 2 años (2B) de Generac Power Systems para interruptores de transferencia industriales

Para el periodo de garantía que se indica a continuación y que comienza a partir de la fecha en la que la unidad se ponga en marcha de manera correcta y/o se active/registre online, Generac Power Systems, Inc. “Generac” garantiza que este interruptor de transferencia está libre de todo defecto en material y mano de obra para los elementos y periodo de tiempo que se indican a continuación. Generac, según su propio criterio, reparará o sustituirá cualquier componente o componentes que, una vez evaluados, inspeccionados y probados por Generac, o por un servicio técnico autorizado independiente, se consideren defectuosos. Cualquier equipo que el comprador/propietario reclame como defectuoso deberá ser evaluado por el servicio técnico autorizado independiente más cercano.

Cobertura de la garantía en año(s): 1	Cobertura de la garantía en año(s): 2
Piezas, mano de obra y desplazamiento limitado	Piezas limitadas solamente

Directrices:

1. La unidad debe estar registrada y tener prueba de compra disponible.
2. Sean cuales sean los tipos de problemas y reparaciones de la garantía, deben ser efectuados y/o dirigidos por un concesionario de servicio autorizado independiente, o una sucursal de este. Las reparaciones o los diagnósticos efectuados por personas diferentes de los concesionarios de servicio autorizados independientes, y que no estén autorizados por escrito por Generac, no serán cubiertos.
3. La garantía es transferible entre el propietario del sitio de la instalación original.
4. Generac puede elegir reparar, sustituir una pieza del equipo o reembolsar el dinero correspondiente a su exclusivo criterio.
5. La garantía solamente se aplica a las unidades montadas y conectadas de manera permanente.
6. Los gabinetes tienen garantía durante el primer año de propiedad solamente. El daño causado después de la recepción del generador es responsabilidad del comprador y no está cubierto por esta garantía. Las muescas, raspaduras, abolladuras o ralladuras del gabinete pintado deben ser reparadas inmediatamente por el propietario.
7. Debe tener disponible una prueba de ejecución de todas las tareas de mantenimiento requeridas.
8. Los gastos de desplazamiento están limitados a un máximo de 482.8 Km (300 millas) o a un tiempo máximo de siete horas y media (7.5) (por ocurrencia, lo que sea menos costoso) por viaje de ida y vuelta desde el servicio técnico independiente autorizado más cercano. Cualquier otro gasto de desplazamiento no está cubierto por la garantía.

Esta garantía NO cubrirá los siguientes aspectos:

1. Los costos del mantenimiento normal (es decir, pieza(s) relacionada(s), ajustes, instalación o puesta en marcha).
2. Los daños en el interruptor de transferencia ocasionados por accidentes, durante el envío, la manipulación o el almacenamiento incorrecto del mismo.
3. Los daños/fallas causados por la operación con cargas o instalaciones diferentes a las recomendadas o especificadas por Generac. Las modificaciones o aplicaciones inadecuadas no autorizadas no estarán cubiertas por la garantía a menos que Generac lo autorice por escrito.
4. El equipo alquilado utilizado mientras se lleven a cabo reparaciones cubiertas por la garantía y/o cualquier equipo extraordinario utilizado para realizar los traslados y/o reinstalaciones del interruptor de transferencia (es decir, grúas, montacargas, elevadores y otros).
5. Los daños en aviones, barcos, carreteras, autobuses, helicópteros, vehículos para la nieve, tractores para la nieve, vehículos todoterreno o cualquier otro medio de transporte considerado no estándar por Generac.
6. Las fallas debidas a desgaste y deterioro normal, accidente, uso indebido, abuso, negligencia, instalación incorrecta o dimensionamiento incorrecto.
7. Los daños causados en cualquiera de los componentes cubiertos por esta garantía o los daños derivados del uso de piezas que no sean originales no están cubiertos por esta garantía.
8. Los daños causados por plagas de roedores, reptiles y/o insectos.
9. Las reparaciones o los diagnósticos efectuados por personas diferentes de los concesionarios de servicio autorizados independientes, y que no estén autorizados por escrito por Generac.
10. Los gabinetes de acero que se oxidan debido a una instalación incorrecta, ubicación en entornos con condiciones difíciles o de agua salada, o que están rayados en algún lugar en el que la integridad de la pintura aplicada se pueda ver afectada.
11. Los fusibles, bombillas y cualquier trabajo relacionado con los mismos.
12. Las unidades vendidas, usadas o clasificadas para aplicaciones de “Alimentación eléctrica principal”, “Montada en remolque” o “Unidad en alquiler” tal y como las define Generac. Contacte con un servicio técnico independiente autorizado para obtener las definiciones.
13. Las averías provocadas por cualquier acto de fuerza mayor, o causa externa, incluyendo entre otros, incendios, robos, congelación, guerras, relámpagos, terremotos, vendavales, granizo, agua, tornados, huracanes, o cualquier otro motivo que se escape del control del fabricante.
14. Los gastos de envío asociados a envíos rápidos.
15. Cualquier daño accidental, consecuente o indirecto provocado por defectos en el material o la mano de obra, o cualquier daño en la reparación o sustitución del o de los componentes defectuosos.
16. Cualquier unidad diseñada/fabricada antes de los modelos del 2014.
17. La mano de obra en situaciones de emergencia, festivos y horas extraordinarias.
18. Los gastos de viaje y estadía de la/las persona(s) que realizan el servicio, salvo que estén incluidos específicamente en los términos de un determinado periodo de la garantía de la unidad.

ESTA GARANTÍA SUSTITUYE CUALQUIER OTRA GARANTÍA, EXPRESA O IMPLÍCITA. ESPECÍFICAMENTE, GENERAC NO OFRECE NINGUNA OTRA GARANTÍA EN CUANTO A LA COMERCIALIZACIÓN O IDONEIDAD PARA UN PROPÓSITO PARTICULAR. CUALQUIER GARANTÍA IMPLÍCITA PERMITIDA POR LA LEY TENDRÁ UNA VIGENCIA LIMITADA A LOS TÉRMINOS DE LA GARANTÍA EXPRESA AQUÍ INCLUIDOS. ALGUNAS JURISDICCIONES NO PERMITEN LIMITACIONES DE LA DURACIÓN DE UNA GARANTÍA IMPLÍCITA; POR LO TANTO, LA LIMITACIÓN PRECEDENTE PUEDE NO APLICARSE A USTED. LA ÚNICA RESPONSABILIDAD DE GENERAC SERÁ LA REPARACIÓN O SUSTITUCIÓN DEL COMPONENTE O COMPONENTES ARRIBA INDICADOS. EN NINGÚN CASO GENERAC SERÁ RESPONSABLE DE NINGÚN DAÑO INCIDENTAL O CONSECUENTE, INCLUSO SI TALES DAÑOS SON RESULTADO DIRECTO DE UNA NEGLIGENCIA DE GENERAC. ALGUNAS JURISDICCIONES NO PERMITEN LA EXCLUSIÓN O LIMITACIÓN DE DAÑOS ACCESORIOS O EMERGENTES, DE MANERA QUE LA LIMITACIÓN PRECEDENTE PUEDE NO APLICARSE A USTED. ESTA GARANTÍA LE CONCEDE DERECHOS LEGALES ESPECÍFICOS. USTED PUEDE CONTAR CON OTROS DERECHOS QUE LE OTORGAN LAS LEYES VIGENTES.

SÓLO PARA AUSTRALIA: Nuestros productos se presentan con garantías que no se pueden excluir en virtud de la Ley del Consumidor de Australia. Usted tiene derecho a un reemplazo o sustitución por una avería grave y a una compensación por cualquier otro daño o pérdida razonablemente previsible. Asimismo, también tiene derecho a la reparación o sustitución de los productos si estos no cumplen con la calidad aceptable y si la avería no constituye una avería importante.
SÓLO PARA NUEVA ZELANDA: Nada en esta declaración de garantía excluye, restringe o modifica ninguna condición, derecho de garantía o remedio que de conformidad con la legislación de Nueva Zelanda (Commonwealth o Estado), incluyendo la Ley sobre Prácticas de Comercio Justo de 1986 o la Ley de Garantías del Consumidor de 1993 ("CGA" por sus siglas en inglés), se aplique a esta garantía limitada y no puede ser así excluida, restringida o modificada. Nada en esta declaración se prevé que tenga el efecto de renuncia de las cláusulas de la CGA, excepto en la medida que así lo permita dicha Ley, y estos términos se modificarán en la medida que sea necesario para dar efecto a tal intención. Si adquiere productos de Generac Power Systems, o de cualquiera de sus revendedores o distribuidores autorizados con fines empresariales, entonces, de conformidad con el artículo 43(2) de la CGA, se acuerda que no se apliquen las cláusulas de la CGA.

GENERAC POWER SYSTEMS, INC. • P.O. BOX 8 • Waukesha, WI, EE.UU. 53187
Tel.: (888) GENERAC (436-3722) • Fax: (262) 544-4851
Para localizar el distribuidor autorizado independiente más cercano y para descargar los esquemas, vistas ampliadas y listas de componentes, visite nuestro sitio web: www.generac.com

N.º de pieza 0J4302SP Revisión H (4/21)

Garantie limitée de 2 ans (2B) de Generac Power Systems des systèmes de commutateur de transfert

Pour la période de garantie mentionnée ci-dessous, qui débute lors du démarrage et/ou de l'activation/enregistrement en ligne de l'appareil, Generac Power Systems, Inc. « Generac » garantit que son commutateur de transfert sera exempt de défauts de matériaux et de fabrication pour les articles et la période indiqués ci-dessous. Generac, à son entière discrétion, réparera ou remplacera toute pièce dont le défaut a été établi, après évaluation, inspection et contrôle par Generac ou par un concessionnaire de service agréé indépendant. Tout équipement jugé défectueux par l'acheteur/le propriétaire devra être vérifié par le concessionnaire réparateur indépendant agréé le plus proche.

Couverture de garantie en année(s) : 1	Couverture de garantie en année(s) : 2
Pièces, main-d'œuvre et déplacement limité	Limitée sur les pièces uniquement

Directives :

1. Le groupe électrogène doit être enregistré et une preuve d'achat doit être fournie.
2. Les réparations ou les questions touchant à la garantie doivent être confiées ou communiquées à un concessionnaire réparateur indépendant agréé. Les réparations ou les diagnostics effectués par d'autres personnes qu'un concessionnaire réparateur indépendant agréé, non autorisés par écrit par Generac, ne seront pas couverts.
3. Cette garantie est transférable entre propriétaires du lieu d'installation d'origine.
4. Generac décidera, à son entière discrétion, de réparer, de remplacer ou de rembourser toute pièce dont le défaut a été établi.
5. Cette garantie s'applique uniquement aux groupes électrogènes fixes et câblés en permanence.
6. Les enceintes sont garanties pendant la première année de possession seulement. Les dommages subis après la réception du générateur relèvent de la responsabilité du propriétaire et ne sont pas couverts par cette garantie. Les éraflures, les marques superficielles, les rayures ou les bosses sur l'enveloppe peinte doivent être réparées sans délai par le propriétaire.
7. Une preuve de l'entretien obligatoire ayant été effectué doit être fournie.
8. L'allocation de déplacement est limitée à un aller-retour de 480 km et de sept heures et demie (7,5) maximum (par cas, le moindre des deux prévalant) à partir du concessionnaire réparateur indépendant agréé le plus proche. Les déplacements supplémentaires requis ne seront pas couverts.

Les éléments suivants NE seront PAS couverts par cette garantie :

1. Les coûts d'entretien normal (c.-à-d., pièce(s) connexe(s), réglages, installation ou mise en route).
2. Les dommages au commutateur de transfert causés par : un accident, l'expédition, la manutention, ou un mauvais entreposage.
3. Les dommages/les défaillances causés par : l'utilisation de charges ou des installations non recommandées ou non indiqués par Generac. Les modifications/mauvaises utilisations non autorisées ne seront pas couvertes par cette garantie, sauf autorisation écrite de Generac.
4. Le matériel de location utilisé pendant les réparations de garantie ou tout équipement spécial utilisé pour le retrait ou la réinstallation du commutateur de transfert (c.-à-d., grues, treuils, appareils de levage, etc.).
5. Les avions, les traversiers, les trains, les autobus, les hélicoptères, les motoneiges, les autoneiges, les véhicules hors route et tout autre moyen de transport jugés comme étant non standard par Generac.
6. Les défectuosités causés par : l'usure normale, un accident, une mauvaise utilisation, une utilisation abusive, une négligence, une mauvaise installation, un mauvais dimensionnement.
7. Cette garantie ne couvre pas les dommages causés par l'utilisation de pièces non d'origine, y compris les dommages consécutifs subis par une pièce sous garantie.
8. Les dommages causés par une infestation d'insectes ou de rongeurs.
9. Les réparations ou les diagnostics effectués par d'autres personnes qu'un concessionnaire réparateur indépendant, non autorisés par écrit par Generac.
10. Les enveloppes de protection en acier attaquées par la rouille en raison d'une mauvaise installation; installées dans un milieu agressif ou salin; qui ont subies des rayures compromettant l'intégrité de la couche de peinture.
11. Les fusibles, les ampoules et la main-d'œuvre connexe.
12. Les appareils vendus, classés ou utilisés pour des utilisations « source principale d'alimentation », « monté sur remorque » ou « unité de location », tel que défini par Generac. Informez-vous auprès d'un concessionnaire réparateur indépendant agréé au sujet des définitions.
13. Les défaillances causées par une catastrophe naturelle ou une cause externe, y compris sans s'y limiter, un incendie, un vol, un gel, une guerre, la foudre, un tremblement de terre, une tempête de vent, la grêle, l'eau, une tornade, un ouragan ou autres circonstances étant à juste titre indépendantes de la volonté du fabricant.
14. Les frais d'expédition associés à l'expédition accélérée.
15. Tout dommage consécutif ou indirect causé par des défauts de matériaux ou de fabrication, ou tout retard de réparation ou de remplacement de la (des) pièce(s) défectueuse(s).
16. Tout groupe électrogène fabriqué avant les modèles 2014.
17. Les heures supplémentaires, les congés et la main-d'œuvre d'urgence.
18. Les frais de subsistance ou de déplacement des personnes qui effectuent la réparation, sauf s'ils sont expressément prévus dans les conditions de période de garantie d'un groupe électrogène particulier.

CETTE GARANTIE REMPLACE TOUTES LES AUTRES GARANTIES, EXPRESSES OU IMPLICITES. SPÉCIFIQUEMENT, GENERAC N'EFFECTUE AUCUNE AUTRE GARANTIE QUANT À LA VALEUR MARCHANDE OU L'ADAPTATION À UN USAGE PARTICULIER. TOUTES LES GARANTIES IMPLICITES QUI SONT PERMISES PAR LA LOI SERONT LIMITÉES DANS LE TEMPS À LA DURÉE DE LA GARANTIE LIMITÉE EXPRESSE FOURNIE AUX PRÉSENTES. LES LOIS APPLICABLES INTERDISANT PARFOIS LES LIMITATIONS SUR LA DURÉE DES GARANTIES IMPLICITES, LA LIMITATION CI-DESSUS PEUT NE PAS S'APPLIQUER À VOTRE CAS. LA SEULE RESPONSABILITÉ DE GENERAC SERA DE RÉPARER OU DE REMPLACER LA (LES) PIÈCE(S) COMME IL EST INDIQUÉ CI-DESSUS. GENERAC NE SERA EN AUCUN CAS RESPONSABLE DES DOMMAGES INDIRECTS OU CONSÉCUTIFS, MÊME SI CES DOMMAGES SONT UNE CONSÉQUENCE DIRECTE DE LA NÉGLIGENCE DE LA PART DE GENERAC. LES LOIS APPLICABLES INTERDISANT PARFOIS L'EXCLUSION OU LA LIMITATION DES DOMMAGES INDIRECTS OU CONSÉCUTIFS, LA LIMITATION CI-DESSUS PEUT NE PAS S'APPLIQUER À VOTRE CAS. CETTE GARANTIE VOUS CONFÈRE DES DROITS PRÉCIS, RECONNUS PAR LA LOI. VOUS POURRIEZ AUSSI AVOIR D'AUTRES DROITS EN VERTU DE LA LOI EN VIGUEUR.

POUR L'AUSTRALIE SEULEMENT : Nos produits sont offerts avec des garanties qui ne peuvent pas être exclues en vertu de la loi sur la protection des consommateurs de l'Australie. Vous avez droit à un remplacement ou un remboursement pour toute défaillance majeure et à une compensation pour les autres pertes et dommages raisonnablement prévisibles. Vous avez aussi droit à ce que les produits soient réparés ou remplacés s'ils ne répondent pas à des critères de qualité acceptables et si la défaillance n'est pas un défaillance majeure.
POUR LA NOUVELLE-ZÉLANDE SEULEMENT : Rien dans cette déclaration de garantie n'exclut, ne restreint ni modifie toute condition, droit de garantie ou recours qui, en vertu de la législation de la Nouvelle-Zélande (Commonwealth ou d'État), y compris la loi sur les pratiques commerciales équitables de 1986 ou la loi sur la protection du consommateur de 1993 (« LPC »), s'appliquent à cette garantie limitée et ne peuvent pas être exclus, restreints ou modifiés. Rien dans cette déclaration n'est conçu pour avoir comme effet d'externaliser les dispositions de la LPC, à l'exception de ce qui est permis par cette loi, et ces conditions doivent être modifiées dans la mesure nécessaire pour donner effet à cette intention. Si vous achetez des produits Generac Power Systems ou d'un de ses revendeurs ou distributeurs autorisés pour des besoins commerciaux, en vertu de la section 43(2) de la LPC, il est entendu que les dispositions de la LPC ne s'appliquent pas.

GENERAC POWER SYSTEMS, INC. • P.O. BOX 8 • Waukesha, WI, USA 53187
Tél. : (888) GENERAC (436-3722) • Fax : (262) 544-4851
Pour trouver le concessionnaire réparateur indépendant le plus proche et pour télécharger les schémas, les vues éclatées et les listes de pièces, visitez notre site Web : www.generac.com

Pièce n° 0J4302FR Révision H (4/21)

Generac Power Systems 2 Year (2B) Limited Warranty for Industrial Standby Generators

For the period of warranty noted below, which begins upon the successful start-up and/or on-line activation of the unit, Generac Power Systems, Inc. “Generac” warrants that its Generator will be free from defects in material and workmanship for the items and period set forth below. Generac will, at its discretion, repair or replace any part(s) which, upon evaluation, inspection and testing by Generac or an Independent Authorized Service Dealer, is found to be defective. Any equipment that the purchaser/owner claims to be defective must be evaluated by the nearest Independent Authorized Service Dealer. Emissions components are excluded from coverage under this extended warranty. Emissions warranty coverage is detailed in a separate emissions warranty.

Warranty Coverage: Warranty coverage period is for Two (2) years or two-thousand (2,000) hours, whichever occurs first.

Warranty Coverage in Year(s): 1	Warranty Coverage in Year(s): 2
Parts, Labor and Limited Travel	Limited Parts Only

Limited Gearbox Coverage:

Year(s): 1-5 Coverage	Year(s): 6-10 Coverage
Limited Parts and Labor	Limited Parts Only

Guidelines:

1. Unit must be registered and proof of purchase available.
2. Any and all warranty repairs and/or concerns must be performed and/or addressed by an Independent Authorized Service Dealer, or branch thereof. Repairs or diagnostics performed by individuals other than Independent Authorized Service Dealers not authorized in writing by Generac will not be covered.
3. This Warranty is transferable between ownership of original install site.
4. Generac supplied engine coolant heaters (block-heaters), heater controls and circulating pumps are only covered during the first year of the warranty provision.
5. Generac may choose to repair, replace or refund a piece of equipment in its sole discretion.
6. Enclosures are warranted against rust for the first year of ownership only. Damage caused after receipt of generator is the responsibility of the owner and is not covered by this warranty. Nicks, scrapes, dents or scratches to the painted enclosure should be repaired promptly by the owner.
7. Warranty only applies to permanently wired and mounted units.
8. Damage to any covered components or consequential damages caused by the use of a non-OEM part will not be covered by the warranty.
9. Proof of performance of all required maintenance must be available.
10. Travel allowance is limited to 300 miles maximum and seven and one half (7.5) hours maximum (per occurrence, whichever is less) round trip from the nearest Independent Authorized Service Dealer. Any additional travel required will not be covered.
11. Engines, driven components and fuel tanks used in Generac’s standby power products system can carry a separate manufacturer’s (OEM) warranty (the “OEM Warranties”), unless otherwise expressly stated. OEM Warranties are in addition to this Warranty. All warranty claims for defects in material and/or workmanship on Generac product OEM components, may be directed through the OEM distributor/dealer network. OEM Warranties may vary and are subject to change. Generac shall have no liability under OEM warranties.

The following will NOT be covered by this warranty:

1. Costs of normal maintenance (i.e. tune-ups, associated part(s), adjustments, loose/leaking clamps, installation and start-up).
2. Damage/failures to the generator and/or transfer switch system caused by accidents, shipping, handling, or improper storage.
3. Damage/failures caused by operation with improper fuels, speeds, loads or installations other than what’s recommended or specified by Generac Power Systems.
4. Damage to the generator and/or transfer switch due to the use of non-Generac parts and/or equipment, contaminated fuels, oils, coolants/antifreeze or lack of proper fuels, oil or coolants/antifreeze.
5. Failures due to normal wear and tear, accident, misuse, abuse, neglect, improper installation, improper sizing, or rodent, reptile, and/or insect infestation.
6. Rental equipment used while warranty repairs are being performed and/or any extraordinary equipment used for removal and/or reinstallation of generator (i.e. cranes, hoists, lifts, et. al.).
7. Planes, ferries, railroad, buses, helicopters, snowmobiles, snow-cats, off-road vehicles or any other mode of transport deemed not standard by Generac.
8. Products that are modified or altered in a manner not authorized by Generac in writing.
9. Starting batteries, fuses, light bulbs, engine fluids and any related labor.
10. Steel enclosures that rust as a result of improper installation, location in a harsh or salt water environment, or are scratched where the integrity of applied paint is compromised.
11. Units sold, rated or used for "Prime Power", "Trailer Mounted" or "Rental Unit" applications as defined by Generac. Contact an Independent Authorized Service Dealer for definitions.
12. Shipping costs associated with expedited shipping.
13. Additional costs for overtime, holiday or emergency labor costs for repairs outside of normal business hours.
14. Any incidental, consequential or indirect damages caused by defects in materials or workmanship, or any delay in repair or replacement of the defective part(s).
15. Failures caused by any act of God or external cause including without limitation, fire, theft, freezing, war, lightning, earthquake, windstorm, hail, water, tornado, hurricane, or any other matters which are reasonably beyond the manufacturer’s control.

THIS WARRANTY SUPERSEDES ALL OTHER WARRANTIES, EXPRESSED OR IMPLIED. SPECIFICALLY, GENERAC MAKES NO OTHER WARRANTIES AS TO THE MERCHANTABILITY OR FITNESS FOR A PARTICULAR PURPOSE. ANY IMPLIED WARRANTIES WHICH ARE ALLOWED BY LAW, SHALL BE LIMITED IN DURATION TO THE TERMS OF THE EXPRESS WARRANTY PROVIDED HEREIN. SOME JURISDICTIONS DO NOT ALLOW LIMITATIONS ON HOW LONG AN IMPLIED WARRANTY LASTS, SO THE ABOVE LIMITATION MAY NOT APPLY TO YOU. GENERAC'S ONLY LIABILITY SHALL BE THE REPAIR OR REPLACEMENT OF PART(S) AS STATED ABOVE. IN NO EVENT SHALL GENERAC BE LIABLE FOR ANY INCIDENTAL OR CONSEQUENTIAL DAMAGES, EVEN IF SUCH DAMAGES ARE A DIRECT RESULT OF GENERAC’S NEGLIGENCE. SOME JURISDICTIONS DO NOT ALLOW THE EXCLUSION OR LIMITATION OF INCIDENTAL OR CONSEQUENTIAL DAMAGES, SO THE ABOVE LIMITATION MAY NOT APPLY TO YOU. THIS WARRANTY GIVES YOU SPECIFIC LEGAL RIGHTS. YOU ALSO HAVE OTHER RIGHTS UNDER APPLICABLE LAW.

FOR AUSTRALIA ONLY: Our goods come with guarantees that cannot be excluded under the Australian Consumer Law. You are entitled to a replacement or refund for a major failure and for compensation for any other reasonably foreseeable loss or damage. You are also entitled to have the goods repaired or replaced if the goods fail to be of acceptable quality and the failure does not amount to a major failure.
FOR NEW ZEALAND ONLY: Nothing in this warranty statement excludes, restricts or modifies any condition, warranty right or remedy which pursuant to the New Zealand Legislation (Commonwealth or State) including the Fair Trading Practices Act of 1986 or the Consumer Guarantees Act 1993 (“CGA”) applies to this limited warranty and may not be so excluded, restricted or modified. Nothing in this statement is intended to have the effect of contracting out of the provisions of the CGA, except to the extent permitted by that Act, and these terms are to be modified to the extent necessary to give effect to that intention. If you acquire goods from Generac Power Systems or any of its authorized resellers and distributors for the purposes of a business, then pursuant to section 43(2) of the CGA, it is agreed that the provisions of the CGA do not apply.

GENERAC POWER SYSTEMS, INC. • P.O. BOX 8 • Waukesha, WI, USA 53187
Ph: (888) GENERAC (436-3722) • Fax: (262) 544-4851

To locate the nearest Independent Authorized Service Dealer and to download schematics, exploded views and parts lists
visit our website: www.generac.com

Part No. 0K3486 Revision E (2/16)

Garantía limitada de 2 años (2B) de Generac Power Systems para los generadores de respaldo industriales

Durante el período de garantía indicado abajo, que comienza desde la puesta en marcha y/o activación exitosa en línea de la unidad, Generac Power Systems, Inc. "Generac" garantiza que generador estará libre de defectos de material y/o mano de obra para los ítems y el período indicados a continuación. Generac, a su discreción, reparará o sustituirá cualquier pieza o piezas que, por medio de la evaluación, inspección y prueba efectuada por Generac o un Concesionario de servicio autorizado independiente de Generac, se determine que es o son defectuosa(s). Todo equipo que el comprador o propietario reclame como defectuoso debe ser evaluado por el Concesionario de servicio autorizado independiente de Generac más cercano. Los componentes relacionados con emisiones están excluidos de la cobertura bajo esta garantía extendida. La cobertura de la garantía de emisiones se detalla por separado en una garantía de emisiones.

Cobertura de la garantía: El período de cobertura de la garantía es de dos (2) años o dos mil (2000) horas, lo que ocurra primero.

Cobertura de la garantía en el o los año(s): 1	Cobertura de la garantía en el o los año(s): 2
Sobre piezas, mano de obra y gastos de viaje limitados	Limitada solo sobre piezas

Cobertura limitada sobre la caja de engranajes:

Año(s) de cobertura: 1-5 Cobertura	Año(s) de cobertura: 6-10 Cobertura
Limitada sobre piezas y mano de obra	Limitada solo sobre piezas

Directrices:

1. La unidad debe estar registrada y tener prueba de compra disponible.
2. Cualquiera y todas las reparaciones y/o preocupaciones por garantía deben ser efectuadas y/o dirigidas por un Concesionario de servicio autorizado independiente de Generac, o una sucursal de este. No serán cubiertas las reparaciones o los diagnósticos efectuados por personas diferentes de los Concesionarios de servicio autorizados independientes de Generac no autorizados por escrito por Generac.
3. Esta garantía es transferible entre propietarios del sitio de instalación original.
4. Los calentadores de refrigerante de motor (calentadores de bloque), los controles del calentador y las bombas de circulación suministrados por Generac solo están cubiertos durante el primer año de prestación de la garantía.
5. Generac puede elegir reparar, sustituir o reembolsar una pieza del equipo a su exclusiva discreción.
6. Los gabinetes están garantizados contra corrosión solamente durante el primer año de propiedad. El daño causado después de la recepción del generador es responsabilidad del comprador y no está cubierto por esta garantía. Las muescas, raspaduras, abolladuras o rayaduras de gabinete pintado deben ser reparadas sin demora por el propietario.
7. La garantía corresponde solamente a las unidades conectadas y montadas en forma permanente.
8. Los daños a cualquier componente o los daños emergentes causados por el uso de una pieza que no sea OEM no estarán cubiertos por la garantía.
9. Debe haber disponible prueba de la ejecución de todo el mantenimiento requerido.
10. Las asignaciones para viaje están limitadas a 300 millas como máximo y siete horas y media (7.5) horas como máximo (por ocurrencia, lo que sea menor), viaje de ida y vuelta, desde el Concesionario de servicio autorizado independiente de Generac más cercano. Todo gasto de viaje adicional requerido no será cubierto.
11. Los motores, los componentes accionados y los tanques de combustible usados en los productos de respaldo de Generac pueden llevar una garantía de fabricante (OEM) separada (las "Garantías de OEM"), a menos que se estipule expresamente lo contrario. Las garantías de OEM son un agregado a esta garantía. Todos los reclamos de garantía por defectos de material y/o mano de obra en los componentes OEM del producto Generac, pueden ser dirigidos a través de la red de distribuidores/concesionarios OEM. Las garantías de OEM pueden variar y están sujetas a cambios. Generac no tendrá responsabilidad bajo las garantías de OEM.

Lo siguiente NO será cubierto por esta garantía:

1. Costes del mantenimiento normal (es decir: afinaciones, pieza[s] relacionada[s], ajustes, abrazaderas sueltas o con fugas, instalación y puesta en marcha).
2. Daños/fallos del sistema de generador y/o interruptor de transferencia causados por accidentes, envío, manipulación, o almacenamiento incorrecto.
3. Los daños/fallos causados por la operación con combustibles, velocidades, cargas, o instalaciones incorrectas diferentes de las recomendadas o especificadas por Generac Power Systems.
4. Los daños al generador y/o el interruptor de transferencia debidos al uso de piezas y/o equipos que no sean de Generac; combustibles, aceites, refrigerantes/anticongelantes contaminados; o falta de combustibles, aceites, refrigerantes/anticongelantes apropiados.
5. Fallos debidos a: desgaste y daño normal, accidente, uso indebido, abuso, negligencia, instalación incorrecta, dimensionamiento incorrecto, o plagas de roedores y/o insectos.
6. Equipos arrendados usados mientras se llevan a cabo reparaciones de garantía y/o todos los equipos extraordinarios usados para retirar y/o reinstalar el generador, (esto es: grúas, malacates, elevadores, etc.).
7. Aeronaves, transbordadores, ferrocarril, autobuses, helicópteros, motocicletas para nieve, camiones para nieve, vehículos fuera de ruta o cualquier otro modo de transporte no considerado estándar por Generac.
8. Productos que se modifiquen o alteren en forma no autorizada por Generac por escrito.
9. Baterías de arranque, fusibles, bombillas de luz, fluidos para el motor y mano de obra relacionada.
10. Los gabinetes de acero que se corroen debido a instalación incorrecta, ubicación en un entorno agresivo o con agua salada, o se rayen donde esté comprometida la integridad de la pintura aplicada.
11. Las unidades vendidas, calificadas para, o usadas en aplicaciones de "Alimentación eléctrica principal", "Montada en remolque" o "Unidad en alquiler" como las define Generac. Comuníquese con un Concesionario de servicio autorizado independiente para las definiciones.
12. Costes de envío asociados con envío urgente.
13. Costes adicionales por horas extra y feriados o los costes de mano de obra de emergencia por reparaciones fuera del horario de trabajo normal.
14. Todos los daños accesorios, emergentes o indirectos causados por defectos en los materiales o mano de obra o toda demora en la reparación o sustitución de la(s) pieza(s) defectuosa(s).
15. Los fallos causados por cualquier acto de fuerza mayor o causa externa, que incluyen, sin limitaciones, incendio, robo, congelamiento, guerra, rayos, terremoto, tormenta de viento, granizo, agua, tornado, huracán, o cualesquiera otros asuntos que estén fuera del control razonable del fabricante.

ESTA GARANTÍA SUSTITUYE CUALQUIER OTRA GARANTÍA, EXPRESA O IMPLÍCITA. ESPECÍFICAMENTE, GENERAC NO EXTIENDE NINGUNA OTRA GARANTÍA ACERCA DE LA COMERCIALIZACIÓN O APTITUD PARA UN PROPÓSITO EN PARTICULAR. LA DURACIÓN DE TODAS LAS GARANTÍAS IMPLÍCITAS PERMITIDAS POR LA LEY ESTARÁ LIMITADA A LAS CONDICIONES DE LA GARANTÍA EXPRESA ESTIPULADA EN LA PRESENTE. ALGUNAS JURISDICCIONES NO PERMITEN LIMITACIONES DE LA DURACIÓN DE UNA GARANTÍA IMPLÍCITA; POR LO TANTO, LA LIMITACIÓN PRECEDENTE PUEDE NO APLICARSE A USTED. LA ÚNICA RESPONSABILIDAD DE GENERAC SERÁ REPARAR O SUSTITUIR LA(S) PIEZA(S) COMO SE ESTIPULÓ PRECEDENTEMENTE. GENERAC NO SERÁ RESPONSABLE EN NINGÚN CASO POR NINGÚN DAÑO ACCESORIO O EMERGENTE, AUN CUANDO TAL DAÑO SEA RESULTADO DIRECTO DE LA NEGLIGENCIA DE GENERAC. ALGUNAS JURISDICCIONES NO PERMITEN LA EXCLUSIÓN O LIMITACIÓN DE DAÑOS ACCESORIOS O EMERGENTES, DE MANERA QUE LA LIMITACIÓN PRECEDENTE PUEDE NO APLICARSE A USTED. ESTA GARANTÍA LE OTORGA DERECHOS LEGALES ESPECÍFICOS. TAMBIÉN TIENE OTROS DERECHOS BAJO LA LEY CORRESPONDIENTE.

SOLO PARA AUSTRALIA: Nuestros productos se entregan con garantías que no pueden ser excluidas según la Australian Consumer Law (Ley australiana de consumidores). Usted tiene derecho a sustitución o reembolso por un fallo mayor y a compensación por cualquier otra pérdida o daño razonable previsible. Usted también tiene derecho a que los bienes sean reparados o sustituidos si los bienes no son de calidad aceptable y la falla no llega a ser un fallo mayor.
SOLO PARA NUEVA ZELANDA: Nada de esta declaración de garantía excluye, restringe o modifica ninguna condición, derecho de garantía o solución que, conforme a la legislación de Nueva Zelanda (Comunidad o Estado), incluso la Fair Trading Practices Act (Ley de transacciones comerciales justas) de 1986 o la Consumer Guarantees Act (Ley de garantías de los consumidores, "CGA") de 1993, se aplique a esta garantía limitada y por lo tanto no puede ser sometida a exclusiones, restricciones o modificaciones. Nada de esta declaración tiene el propósito de tener efecto de contratar fuera de las previsiones de la CGA, excepto con el alcance permitido por la ley y estos términos se deben modificar con el alcance necesario para hacer efectiva esta intención. Si adquiere bienes de Generac Power Systems o alguno de sus revendedores y distribuidores autorizados con propósitos comerciales, entonces, conforme a la sección 43(2) de la CGA, se acuerda que no se aplican las previsiones de la CGA.

GENERAC POWER SYSTEMS, INC. • P.O. BOX 8 • Waukesha, WI 53187, EE. UU.
Tel.: (888) GENERAC (436-3722) • Fax: (262) 544-4851
Para ubicar el Concesionario de servicio autorizado independiente más cercano y descargar diagramas esquemáticos, despieces y listas de piezas
visite nuestro sitio Web: www.generac.com

Núm. de pieza 0K3486 Revisión E (02/16)

Garantie limitée de 2 ans (2B) de Generac Power Systems sur les générateurs de secours industriels

Pendant la période de garantie mentionnée ci-bas, qui débute dès le démarrage réussi de l'appareil ou l'activation en ligne de l'appareil, Generac Power Systems, Inc. (Generac) garantit que son générateur sera exempt de vices de matériaux et fabrication en ce qui concerne les éléments et la période indiqués ci-dessous. À sa seule discrétion, Generac réparera ou remplacera toute pièce qui est jugée défectueuse après l'évaluation, l'inspection et la mise à l'essai par Generac ou un fournisseur de services d'entretien agréé indépendant. Tout équipement que l'acheteur/propriétaire prétend être défectueux doit être évalué par le fournisseur de services d'entretien agréé indépendant le plus près. Les composantes relatives aux émissions ne sont pas couvertes en vertu de la présente garantie. La couverture des composantes relatives aux émissions est détaillée dans une garantie distincte.

Couverture de la garantie : La période de garantie est de deux (2) ans ou de deux mille (2000) heures, selon la première éventualité.

Période de garantie : 1	Période de garantie : 2
Pièces, main-d'œuvre et couverture limitée des déplacements	Couverture limitée – pièces seulement

Couverture limitée de la boîte à engrenages :

Période : couverture de 1 à 5 ans	Période : couverture de 6 à 10 ans
Couverture limitée – pièces et main-d'œuvre	Couverture limitée – pièces seulement

Lignes directrices :

1. L'appareil doit être enregistré et la preuve d'achat doit être présentée sur demande.
2. Toute réparation sous garantie doit être effectuée par un fournisseur de services d'entretien agréé indépendant ou l'une de ses succursales, et toute préoccupation doit être également traitée par un fournisseur de services d'entretien agréé indépendant de Generac ou l'une de ses succursales. Toute réparation ou évaluation effectuée par des personnes autres que des fournisseurs de services d'entretien agréés indépendants qui n'a pas été autorisée par écrit par Generac ne sera pas couverte.
3. La présente garantie est transférable conjointement à la propriété du site d'installation d'origine.
4. Les chaufferettes à liquide de refroidissement du moteur (chauffe-moteur), les commandes de chauffage et les pompes de circulation fournies par Generac ne sont couvertes que pendant la première année de la période de garantie.
5. Generac peut choisir, à sa seule discrétion, de réparer, de remplacer ou de rembourser une pièce d'équipement.
6. Les boîtiers sont garantis contre la rouille pendant la première année de possession seulement. Les dommages causés après la réception du générateur sont la responsabilité du propriétaire et ne sont pas couverts par la présente garantie. Les entailles, éraflures, bosses ou égratignures au boîtier peint doivent être réparées sans délai par le propriétaire.
7. La garantie s'applique uniquement aux appareils montés et câblés en permanence.
8. Aucun dommage ou dommage indirect à toute pièce couverte découlant de l'utilisation de pièces non fabriquées par un fabricant d'équipement d'origine ne sera couvert par la garantie.
9. Une preuve d'exécution de tous les travaux d'entretien requis doit être présentée sur demande.
10. La présente garantie couvre les déplacements aller-retour d'un maximum de 480 km (300 miles) et de sept heures et demie (7,5) (par déplacement, selon le moindre des deux) à partir du fournisseur de services d'entretien agréé indépendant le plus près. Tout déplacement supplémentaire requis ne sera pas couvert.
11. Les moteurs, les pièces d'entraînement et les réservoirs de carburant utilisés dans les systèmes d'alimentation de secours de Generac peuvent être protégés au titre de la garantie d'un fabricant d'équipement distinct (les « garanties des fabricants d'équipement d'origine »), sauf indication expresse à l'effet contraire. Les garanties des fabricants d'équipement d'origine s'ajoutent à la présente garantie. Toute réclamation au titre de la garantie pour vices de matériaux ou de fabrication de pièces d'un fabricant d'équipement d'origine sur un produit Generac peut être faite auprès du distributeur ou du réseau de fournisseurs de ce fabricant d'équipement d'origine. Les garanties des fabricants d'équipement d'origine peuvent varier et faire l'objet de modifications. Generac n'a aucune responsabilité découlant des garanties offertes par les fabricants d'équipement d'origine.

Les éléments suivants ne seront PAS couverts par la présente garantie :

1. Les coûts d'entretien normal (c'est-à-dire mises au point, réglages de pièces associées, ajustements, resserrage de fixations, installation et démarrage).
2. Les dommages ou défaillances du générateur et/ou du commutateur de transfert causés par un accident, le transport, la manutention ou un entreposage inadéquat.
3. Les dommages/défaillances causés par l'utilisation de carburants inappropriés ou l'utilisation à des vitesses, avec des charges ou selon une installation autres que ce qui est recommandé ou spécifié par Generac Power Systems.
4. Les dommages au générateur et/ou au commutateur de transfert causés par l'utilisation de pièces ou d'équipement non fabriqués par Generac, de carburant, d'huile, de liquide de refroidissement et d'antigel contaminé ou encore du manque de carburant, d'huile, de liquide de refroidissement et d'antigel.
5. Les défaillances causées par l'usure normale, un accident, une utilisation inappropriée, une utilisation abusive, une négligence, une installation inadéquate, un dimensionnement inadéquat ou une infestation de rongeurs, de reptiles ou d'insectes.
6. L'équipement de location utilisé pendant que des réparations sous garantie sont effectuées et/ou tout équipement extraordinaire utilisé pour retirer ou réinstaller le générateur (c'est-à-dire grues, appareils de levage, élévateurs, etc.).
7. Les avions, les traversiers, les trains, les autobus, les hélicoptères, les motoneiges, les dameuses, les véhicules hors route ou tout autre moyen de transport jugé non standard par Generac.
8. Les produits modifiés ou altérés d'une manière qui n'a pas été autorisée par écrit par Generac.
9. Les batteries de démarrage, les fusibles, les ampoules électriques, les fluides de moteur et toute main-d'œuvre connexe.
10. Les boîtiers en acier qui rouillent en raison d'une installation inadéquate, d'une installation dans un environnement difficile ou salin ou d'égratignures qui compromettent l'intégrité de la peinture appliquée sur le boîtier.
11. Les appareils vendus, cotés ou utilisés selon les applications suivantes, telles qu'elles sont définies par Generac : « puissance électrique de base », « monté sur remorque » ou « unité de location ». Veuillez communiquer avec un fournisseur de services d'entretien agréé indépendant pour obtenir les définitions.
12. Les coûts d'expédition liés à l'expédition accélérée.
13. Les coûts supplémentaires liés aux heures supplémentaires, aux jours fériés ou aux services d'urgence pour toute réparation effectuée en dehors des heures normales de bureau.
14. Tout dommage accessoire, subséquent ou indirect causé par un défaut de matériau et de fabrication ou par tout retard dans la réparation ou le remplacement de pièces défectueuses.
15. Les défaillances causées par un cas de force majeure ou une cause externe y compris, sans toutefois s'y limiter, le feu, le vol, le gel, la guerre, la foudre, un tremblement de terre, une tempête, la grêle, la pluie, une tornade, un ouragan ou toute autre situation raisonnablement hors du contrôle du fabricant.

LA PRÉSENTE GARANTIE REMPLACE TOUTES LES AUTRES GARANTIES, EXPLICITES OU IMPLICITES. EN PARTICULIER, GENERAC N'OFFRE AUCUNE AUTRE GARANTIE QUANT À LA QUALITÉ MARCHANDE OU À LA CONVENANCE À UN USAGE PARTICULIER. TOUTE GARANTIE IMPLICITE AUTORISÉE PAR LA LOI SERA LIMITÉE À LA DURÉE DE LA PÉRIODE DE LA PRÉSENTE GARANTIE EXPLICITE. CERTAINS ÉTATS OU PROVINCES NE PERMETTENT PAS LES LIMITATIONS SUR LA DURÉE D'UNE GARANTIE IMPLICITE ET, PAR CONSÉQUENT, LA PRÉSENTE LIMITATION PEUT NE PAS S'APPLIQUER. LA RESPONSABILITÉ DE GENERAC SE LIMITERA À LA RÉPARATION OU AU REMPLACEMENT DES PIÈCES, COMME INDIQUÉ PRÉCÉDEMMENT. EN AUCUN CAS GENERAC NE POURRA ÊTRE TENUE RESPONSABLE DE DOMMAGES ACCESSOIRES OU SUBSÉQUENTS, MÊME SI LES DOMMAGES RÉSULTENT DIRECTEMENT DE LA NÉGLIGENCE DE GENERAC. CERTAINS ÉTATS OU PROVINCES N'AUTORISENT PAS L'EXCLUSION NI LA LIMITATION DES DOMMAGES ACCESSOIRES OU INDIRECTS ET, PAR CONSÉQUENT, LA LIMITATION ÉNONCÉE CI-DESSUS PEUT NE PAS S'APPLIQUER. CETTE GARANTIE VOUS CONFÈRE DES DROITS LÉGAUX PRÉCIS. VOUS POUVEZ ÉGALEMENT JOUIR D'AUTRES DROITS EN VERTU DES LOIS APPLICABLES.

POUR L'AUSTRALIE UNIQUEMENT : Nos produits sont fournis avec des garanties qui ne peuvent être exclues en vertu de la loi australienne sur la consommation (Australian Consumer Law). Vous avez droit à un remplacement ou à un remboursement pour une défaillance majeure et à une indemnisation pour toute autre perte ou tout dommage raisonnablement prévisible. Vous disposez également d'un droit à la réparation ou au remplacement si les produits ne sont pas d'une qualité acceptable et si cette défaillance n'est pas considérée comme majeure.
POUR LA NOUVELLE-ZÉLANDE UNIQUEMENT : Cette garantie n'exclut, ne restreint ni ne modifie aucune condition, aucun droit de garantie ou recours qui, conformément à la législation de Nouvelle-Zélande (Commonwealth ou État), y compris la loi sur la pratique commerciale loyale de 1986 (Fair Trading Practices Act) ou la loi sur la protection du consommateur de 1993 (CGA ou Consumer Guarantees Act), s'applique à cette garantie limitée et ne peut pas être exclue, restreinte ou modifiée. Cette garantie ne vise en aucun cas à contourner les dispositions de la CGA, sauf dans la mesure permise par cette loi, et ces termes doivent être modifiés dans la mesure nécessaire pour donner effet à cette intention. Si vous faites l'acquisition d'un produit de Generac Power Systems ou d'un de ses distributeurs et revendeurs autorisés à des fins commerciales, alors, conformément à l'article 43(2) de la CGA, il est convenu que les dispositions de la CGA ne s'appliquent pas.

GENERAC POWER SYSTEMS, INC. • C.P. 8 • Waukesha, WI (É.-U.) 53187
Téléphone : (888) GENERAC (436-3722) • Télécopieur : (262) 544-4851

Pour trouver le fournisseur de services d'entretien agréé indépendant le plus près et pour télécharger les schémas, les vues éclatées et les listes de pièces
visitez notre site Web : www.generac.com

Pièce no 0K3486 Révision E (2/16)

CERTIFICATE

This is to certify that

Generac Power Systems, Inc.

S45 W29290 Hwy. 59
Waukesha, WI 53189
United States of America

with the organizational units/sites as listed in the annex

has implemented and maintains a **Quality Management System**.

Scope:
Design, Manufacture, and Distribution of Power Products and Solutions.

Through an audit, documented in a report, it was verified that the management system fulfills the requirements of the following standard:

ISO 9001 : 2015

Certificate registration no.	10012920 QM15
Date of original certification	2013-12-09
Date of revision	2021-06-25
Date of certification	2021-07-16
Valid until	2024-07-15

DQS Inc.

Brad McGuire
Managing Director

Annex to certificate
Registration No. 10012920 QM15

Generac Power Systems, Inc.

S45 W29290 Hwy. 59
Waukesha, WI 53189
United States of America

Location	Scope
10012920 **Generac Power Systems, Inc.** **S45 W29290 Hwy. 59** **Waukesha, WI 53189** **United States of America**	Design and Support of Power Products and Solutions.
10012922 **Generac Power Systems, Inc.** **211 Murphy Dr.** **Eagle, WI 53119** **United States of America**	Manufacture and Distribution of Power Products and Solutions.
10012923 **Generac Power Systems, Inc.** **757 N. Newcomb St.** **Whitewater, WI 53190** **United States of America**	Manufacture and Distribution of Power Products and Solutions.
10012924 **Generac Power Systems, Inc.** **900 N. Parkway** **Jefferson, WI 53549** **United States of America**	Manufacture of Power Products and Solutions.
10013528 **Generac Power Systems** **3815 Oregon St.** **Oshkosh, WI 54902** **United States of America**	Manufacture and Distribution of Power Products.
10017103 **Generac Mobile** **215 Power Drive** **Berlin, WI 54923** **United States of America**	Manufacture and Distribution of Power Products.

This annex (edition: 2021-06-25) is only valid in connection with the above-mentioned certificate.

Annex to certificate
Registration No. 10012920 QM15

Generac Power Systems, Inc.

S45 W29290 Hwy. 59
Waukesha, WI 53189
United States of America

Remote Location	Scope
10014175 **Generac Power Systems, Inc.** **351 Collins Road** **Jefferson, WI 53549** **United States of America**	The remote location at Jefferson, WI performs the following primary functions: Parts and Components Receiving, Inventory, Return and Reconditioning of Product, and Distribution to Generac Locations.
10017439 **Generac Mobile** **745 E. Knopf St.** **Berlin, WI 54923** **United States of America**	The remote location at Berlin, WI performs the following primary functions: Warehousing and Shipping.
10018422 **Generac Power Systems, Inc.** **303 Venture Court** **Janesville, WI 53546** **United States of America**	The remote location at Janesville, WI performs the following primary functions: Parts and Components Receiving, Kitting, Warehousing, Inventory, and Distribution to Generac locations.

This annex (edition: 2021-06-25) is only valid in connection with the above-mentioned certificate.

GENERAC DIESEL & BI-FUEL GENERATORS
GENERAC / OLYMPIAN GAS GENERATORS
SPECIAL SEISMIC CERTIFICATION

Buehler Project No. 2017-0460.00
April 20, 2020

Generac and Olympian Gas Generators and Generac Diesel and Bi-Fuel Generators (listed in Table 1) are seismically certified in accordance with the 2018 International Building Code (IBC), 2019 California Building Code (CBC), and American Society of Civil Engineers (ASCE) Minimum Design Loads for Buildings and Other Structures, ASCE 7-16. This product line is also preapproved in accordance with PIN 55: Office of Statewide Health Planning and Development (OSHPD) Special Seismic Certification Preapproval (OSP-0282-10), dated 04/08/2020.

The basis of this seismic certification is through successful tri-axial shake table testing at the US Army Construction Engineering Research Laboratory (Report 2012-0211.00), Curtiss-Wright QualTech NP testing lab (Report Q1218.0 – Rev 2 and amendment dated 09/12/2019), and University of Buffalo testing lab, SEESL (Report No: UB CSEE/SEESL-2019-05 Rev2), and the analytic evaluation by Buehler Engineering, Inc. The shake table testing and operability tests were conducted in accordance with ICC-ES AC 156 (2018).

Units are qualified for seismic applications when properly installed utilizing a **rigid base mounted** configuration, used as intended and located in the United States where the "design 5 percent damped spectral response acceleration at short periods adjusted for site class effects", S_{DS}, is less than or equal to values in **Table 1**. Below grade, at grade, or above grade installations are permitted and included in this certification. This certification may be valid for additional S_{DS} levels where the height factor, z/h, is less than listed in **Table 1**. This certification is valid for a component importance factor, I_P, of 1.0 or 1.5.

For anchorage requirements, refer to the manufacturer supplied installation instructions for seismic applications. Anchorage requirement details such as brand, type, embedment, edge spacing, anchor spacing, support structure strength, special inspection, and attachment to building and non-building structures must be outlined and approved by the Structural Engineer of Record (SEOR) for the project or building. Structural floors and housekeeping pads must also be designed to resist seismic forces and approved by SEOR. The installing contractor is responsible for the proper installation of units, observing and complying with the mounting requirements, and any additional requirements outlined by the SEOR.

This certification applies only to the manufacture model numbers noted herein, and further limited to the internal components certified by qualified shake table testing. For additional information, refer to the supplemental analysis report.

Submitted:

Scott R. Hooker
President
For Buehler Engineering, Inc.

REGISTERED PROFESSIONAL ENGINEER
SCOTT R. HOOKER
No. 3937
STRUCTURAL
STATE OF CALIFORNIA

GENERAC®

BUEHLER

Table 1A. Diesel and Bi-Fuel Generator Certified Product Matrix

S_{DS} = 1.50g @ z/h = 1.0 F_P / W_p = 3.38
S_{DS} = 1.60g @ z/h = 0.68 F_P / W_p = 2.83
S_{DS} = 1.60g @ z/h = 0.0 F_P / W_p = 1.20

Model Number[2]	Kw Rating	OPEN SET			
		Unit Dimensions (mm)			Operating Weight (lbs)
		H	W	L	
SD35	35	1147	950	1930	1,850
SD40	40	1147	950	1930	1,850
SD50	50	1147	950	1930	1,850
SD60	60	1250	1016	2360	2,425
SD80	80	1250	1016	2360	2,425
SD100	100	1313	1016	2795	3,545
SD125/130	130	1313	1016	2795	3,545
SD150	150	1453	1262	2960	3,980
SD175	175	1453	1262	2960	3,980
SD200	200	1467	1357	3250	4,465
SD230	230	1467	1357	3250	4,465
SD250	250	1467	1357	3250	4,465
SD275[1]	275	1723	1463	3455	5,816
SD300[1]	300	1723	1463	3455	5,816
SD350[1]	350	1723	1463	3455	6,400

1. Available in Prime Modular (MPS) configuration (MD vs SD). See Nomenclature.
2. Available in Bi-Fuel configuration (SB vs SD). See Nomenclature.

Model Number[2]	Kw Rating	STD Enclosure				Level 1A Enclosure				Level 2A Enclosure			
		Unit Dimensions			Operating Weight (lbs)	Unit Dimensions			Operating Weight (lbs)	Unit Dimensions			Operating Weight (lbs)
		H	W	L		H	W	L		H	W	L	
SD35	35	1258	965	2409	2,312	1258	965	2857	2,413	1574	965	2409	2,498
SD40	40	1258	965	2409	2,312	1258	965	2857	2,413	1574	965	2409	2,498
SD50	50	1258	965	2409	2,312	1258	965	2857	2,413	1574	965	2409	2,498
SD60	60	1427	1028	2840	2,850	1427	1028	3287	2,875	1742	1028	2840	3,050
SD80	80	1427	1028	2840	2,850	1427	1028	3287	2,875	1742	1028	2840	3,050
SD100	100	1627	1028	3371	4,054	1627	1028	3915	4,295	2054	1028	3671	4,545
SD125/130	130	1627	1028	3371	4,054	1627	1028	3915	4,295	2054	1028	3671	4,545
SD150	150	1732	1280	3633	4,845	1732	1280	4279	5,230	2330	1280	3633	5,430
SD175	175	1732	1280	3633	4,845	1732	1280	4279	5,230	2330	1280	3633	5,430
SD200	200	1770	1371	3923	5,416	1770	1371	4569	5,720	2372	1371	3923	7,200
SD230	230	1770	1371	3923	5,416	1770	1371	4569	5,720	2372	1371	3923	7,200
SD250	250	1770	1371	3923	5,416	1770	1371	4569	5,720	2372	1371	3923	7,200
SD275[1]	275	1977	1463	4439	6,430	1977	1463	5084	7,405	2726	1463	4588	8,380
SD300[1]	300	1977	1463	4439	6,430	1977	1463	5084	7,405	2726	1463	4588	8,380
SD350[1]	350	1977	1463	4439	7,109	1977	1463	5084	8,084	2726	1463	4588	9,050

1. Available in Prime Modular (MPS) configuration (MD vs SD). See Nomenclature.
2. Available in Bi-Fuel configuration (SB vs SD). See Nomenclature.

Operating weight does not include weight of tank and tank contents.

GENERAC®

BUEHLER

S_{DS} = 0.80g @ z/h = 1.0 F_P / W_p = 1.80

S_{DS} = 2.44g @ z/h = 0.0 F_P / W_p = 1.83

Table 1B. Gas Generator Certified Product Matrix

Model Number	Kw Rating	OPEN SET				STD Enclosure					Level 1A Enclosure				
		Unit Dimensions (mm)			Operating Weight (lbs)	Unit Dimensions (mm)			Operating Weight (lbs)		Unit Dimensions (mm)			Operating Weight (lbs)	
		H	W	L		H	W	L	Steel	Alum	H	W	L	Steel	Alum
SG0035*G54[1]	**35**	1176	950	1930	1,575	1258	965	2409	2,100	1,864	1258	965	2857	-	1,877
SG0035*G54[1]	35	1176	950	1930	1,575	1258	965	2409	2,100	1,864	1258	965	2857	2,179	1,877
SG0035*G45[1]	35	1128	946	1983	1,675	1461	965	2409	2,172	1,904	1461	965	2409	2,268	1,999
SG0040*G54[1]	40	1176	950	1930	1,575	1258	965	2409	2,100	1,864	1258	965	2857	2,179	1,877
SG0040*G45[1]	40	1128	946	1983	1,675	1461	965	2409	2,172	1,904	1461	965	2409	2,268	1,999
SG0045*G54[1]	45	1176	950	1930	1,575	1258	965	2409	2,100	1,864	1258	965	2857	2,179	1,877
SG0045*G45[1]	45	1128	946	1983	1,675	1461	965	2409	2,172	1,904	1461	965	2409	2,268	1,999
SG0050*G54[1]	50	1176	950	1930	1,575	1258	965	2409	2,100	1,864	1258	965	2857	2,179	1,877
SG0050*G45[1]	50	1128	946	1983	1,675	1461	965	2409	2,172	1,904	1461	965	2409	2,268	1,999
SG0050*G68[1]	50	1191	1016	2360	1,929	1406	1016	2840	2,370	2,199	1406	1016	3287	2,590	2,377
SG0060*G45[1]	60	1170	1016	2365	1,874	1779	1028	2839	2,315	2,144	1779	1028	2839	2,535	2,276
SG0060*G68[1]	60	1191	1016	2360	1,929	1406	1016	2840	2,370	2,133	1406	1016	3287	2,590	2,331
SG0070*G45[1]	70	1170	1016	2365	1,874	1779	1028	2839	2,315	2,144	1779	1028	2839	2,535	2,276
SG0070*G68[1]	70	1191	1016	2360	1,929	1406	1016	2840	2,370	2,133	1406	1016	3287	2,590	2,331
SG0080*G45[1]	80	1170	1016	2365	1,874	1779	1028	2839	2,315	2,144	1779	1028	2839	2,535	2,276
SG0080*G68[2]	80	1330	1013	2795	2,600	1627	1028	3371	3,100	2,790	1627	1028	3915	3,350	3,015
SG0080*G90[2]	80	1250	1016	2360	2,218	1427	1028	2840	2,659	2,515	1427	1028	3287	2,879	2,630
SG0100*G68[2]	100	1330	1013	2795	2,600	1627	1028	3371	3,100	2,790	1627	1028	3915	3,350	3,015
SG0100*G90[2]	100	1250	1016	2360	2,218	1427	1028	2840	2,659	2,630	1427	1028	3287	2,879	2,701
SG0130*G68[2]	130	1330	1013	2795	2,600	1627	1028	3371	3,100	2,790	1627	1028	3915	3,350	3,015
SG0130*G90[2]	130	1192	1013	2795	2,400	1627	1028	3371	2,900	2,802	1627	1028	3915	3,150	2,873
SG0150*G68[2]	150	1356	1249	2960	2,940	1732	1280	3633	3,790	3,411	1732	1280	4279	3,990	3,591
SG0150*G90[2]	150	1192	1249	2960	2,800	1732	1280	3633	3,650	2,802	1732	1280	4279	3,850	2,873
SG0150*G129[2]	150	1583	1357	3250	5,756	1770	1371	3909	6,577	n/a	1770	1371	4575	6,990	n/a
SG0150*G133[2]	150	1619	1463	3455	5,200	1946	1463	4437	6,575	n/a	1946	1463	5084	7,491	n/a
SG0150*G142[2]	150	1583	1357	3250	5,460	1772	1371	3923	6,440	5,890	1772	1371	3250	6,650	6,021
SG0175*G129[2]	175	1583	1357	3250	5,756	1770	1371	3909	6,577	n/a	1770	1371	4575	6,990	n/a
SG0175*G133[2]	175	1619	1463	3455	5,200	1946	1463	4437	6,575	n/a	1946	1463	5084	7,491	n/a
SG0175*G142[2]	175	1583	1357	3250	5,460	1772	1371	3923	6,440	5,890	1772	1371	3250	6,650	6,021
SG0200*G129[2]	200	1583	1357	3250	5,756	1770	1371	3909	6,577	n/a	1770	1371	4575	6,990	n/a
SG0200*G133[2]	200	1619	1463	3455	5,200	1946	1463	4437	6,575	n/a	1946	1463	5084	7,491	n/a
SG0200*G142[2]	200	1583	1357	3250	5,460	1772	1371	3923	6,440	5,974	1772	1371	3250	6,650	6,104
SG0200*G142[2]	200	1724	1450	3455	5,985	n/a	n/a	n/a	n/a	n/a	n/a	n/a	n/a	n/a	n/a
SG0230*G129[2]	230	1728	1463	3455	6,360	1946	1463	4437	7,538	n/a	1946	1463	5084	8,224	n/a
SG0230*G133[2]	230	1747	1463	3455	6,390	1946	1463	4437	7,249	n/a	1946	1463	5084	8,224	n/a
SG0230*G142[2]	230	1724	1450	3455	5,460	1976	1463	4437	7,448	6,671	1976	1463	4569	7,911	6,870
SG0250*G129[2]	250	1728	1463	3455	6,360	1946	1463	4437	7,538	n/a	1946	1463	5084	8,224	n/a
SG0250*G133[2]	250	1747	1463	3455	6,390	1946	1463	4437	7,249	n/a	1946	1463	5084	8,224	n/a
SG0250*G142[2]	250	1724	1450	3455	5,985	1976	1463	4437	6,600	6,801	1976	1463	4569	7,911	7,000
SG0250*G142[2]	250	1724	1450	3455	5,985	1976	1450	4437	7,465	6,717	1976	1450	4569	7,947	7,152
SG0275*G129[2]	275	1728	1463	3455	6,612	1946	1463	4437	7,790	n/a	1946	1463	5084	8,476	n/a
SG0275*G133[2]	275	1747	1463	3455	6,390	1946	1463	4437	7,249	n/a	1946	1463	5084	8,224	n/a
SG0275*G142[2]	275	1724	1450	3455	5,985	1976	1463	4437	7,550	6,756	1976	1463	4569	7,836	6,957
SG0300*G129[2]	300	1728	1463	3455	6,612	1976	1463	4437	7,790	n/a	1976	1463	5084	8,476	n/a
SG0300*G133[2]	300	1747	1463	3455	6,390	1976	1463	4437	7,249	1,864	1976	1463	5084	8,224	1,877
SG0300*G142[2]	300	1724	1450	3455	5,985	1976	1463	4437	7,550	7,042	1976	1463	4569	7,836	7,242
SG0350*G219[2]	350	1782	1803	3923	7,574	2032	1803	5268	9,990	8,820	2032	1803	5084	10,690	9,170
SG0350*G219[2]	350	1782	1803	3923	8,274	2032	1803	5268	10,690	9,520	2032	1803	5084	11,470	9,870
SG0400*G219[2]	400	1782	1803	3923	7,574	2032	1803	5268	9,990	8,820	2032	1803	5084	10,690	9,170
SG0400*G219[2]	400	1782	1803	3923	8,274	2032	1803	5268	10,690	9,520	2032	1803	5084	11,470	9,870
SG0450*G219[2]	450	1782	1803	3923	9,690	2032	1803	5268	10,690	9,520	2032	1803	5084	11,470	9,870
SG0500*G258[2]	500	1903	1803	3923	9,739	2032	1803	5268	11,929	10,841	2032	1803	6287	12,936	11,274

1. Available in Prime Modular (MPS) configuration (MG vs SG). See Nomenclature.
2. Available in MPS configuration (MG vs SG) AND in Olympian Brand (LG). See Nomenclature.

GENERAC®

BUEHLER

S_{DS} = 0.80g @ z/h = 1.0 F_P / W_p = 1.80
S_{DS} = 2.44g @ z/h = 0.0 F_P / W_p = 1.83

Table 1B. Gas Generator Certified Product Matrix Cont.

Model Number	Kw Rating	Level 2A Enclosure					Level 3 Enclosure				
		Unit Dimensions (mm)			Operating Weight (lbs)		Unit Dimensions (mm)			Operating Weight (lbs)	
		H	W	L	Steel	Alum	H	W	L	Steel	Alum
SG0035*G54[1]	35	1574	965	2409	2,328	1,974	n/a	n/a	n/a	n/a	n/a
SG0035*G54[1]	35	1574	965	2409	2,328	1,974	n/a	n/a	n/a	n/a	n/a
SG0035*G45[1]	35	1461	965	2409	2,353	2,083	n/a	n/a	n/a	n/a	n/a
SG0040*G54[1]	40	1574	965	2409	2,328	1,974	n/a	n/a	n/a	n/a	n/a
SG0040*G45[1]	40	1461	965	2409	2,353	2,083	n/a	n/a	n/a	n/a	n/a
SG0045*G54[1]	45	1574	965	2409	2,328	1,974	n/a	n/a	n/a	n/a	n/a
SG0045*G45[1]	45	1461	965	2409	2,353	2,083	n/a	n/a	n/a	n/a	n/a
SG0050*G54[1]	50	1574	965	2409	2,328	2,070	n/a	n/a	n/a	n/a	n/a
SG0050*G45[1]	50	1461	965	2409	2,353	2,083	n/a	n/a	n/a	n/a	n/a
SG0050*G68[1]	50	1722	1016	2840	2,811	2,499	n/a	n/a	n/a	n/a	n/a
SG0060*G45[1]	60	1779	1028	2839	2,756	2,475	n/a	n/a	n/a	n/a	n/a
SG0060*G68[1]	60	1722	1016	2840	2,811	2,530	n/a	n/a	n/a	n/a	n/a
SG0070*G45[1]	70	1779	1028	2839	2,756	2,475	n/a	n/a	n/a	n/a	n/a
SG0070*G68[1]	70	1722	1016	2840	2,811	2,530	n/a	n/a	n/a	n/a	n/a
SG0080*G45[1]	80	1779	1028	2839	2,756	2,475	n/a	n/a	n/a	n/a	n/a
SG0080*G68[2]	80	2054	1028	3671	3,600	3,240	n/a	n/a	n/a	n/a	n/a
SG0080*G90[2]	80	1743	1028	2840	3,100	2,802	n/a	n/a	n/a	n/a	n/a
SG0100*G68[2]	100	2054	1028	3671	3,600	3,240	n/a	n/a	n/a	n/a	n/a
SG0100*G90[2]	100	1743	1028	2840	3,100	2,756	n/a	n/a	n/a	n/a	n/a
SG0130*G68[2]	130	2054	1028	3671	3,600	3,240	n/a	n/a	n/a	n/a	n/a
SG0130*G90[2]	130	2054	1028	3671	3,400	2,928	n/a	n/a	n/a	n/a	n/a
SG0150*G68[2]	150	2330	1280	3633	4,190	3,771	n/a	n/a	n/a	n/a	n/a
SG0150*G90[2]	150	2330	1280	3633	4,050	2,928	n/a	n/a	n/a	n/a	n/a
SG0150*G129[2]	150	2372	1371	3923	7,236	n/a	n/a	n/a	n/a	n/a	n/a
SG0150*G133[2]	150	2726	1463	4588	8,000	n/a	n/a	n/a	n/a	n/a	n/a
SG0150*G142[2]	150	2370	1371	3923	6,980	6,122	3274	1617	5269	10,602	8,386
SG0175*G129[2]	175	2372	1371	3923	7,236	n/a	n/a	n/a	n/a	n/a	n/a
SG0175*G133[2]	175	2726	1463	4588	8,000	n/a	n/a	n/a	n/a	n/a	n/a
SG0175*G142[2]	175	2370	1371	3923	6,980	6,122	3274	1617	5269	10,602	8,386
SG0200*G129[2]	200	2372	1371	3923	7,236	n/a	n/a	n/a	n/a	n/a	n/a
SG0200*G133[2]	200	2726	1463	4588	8,000	n/a	n/a	n/a	n/a	n/a	n/a
SG0200*G142[2]	200	2370	1371	3923	6,980	6,206	3274	1617	5269	10,602	8,386
SG0200*G142[2]	200	2726	1463	4588	8,395	6,731	3274	1617	5269	10,905	9,096
SG0230*G129[2]	230	2726	1463	4588	9,169	n/a	n/a	n/a	n/a	n/a	n/a
SG0230*G133[2]	230	2726	1463	4588	9,200	n/a	n/a	n/a	n/a	n/a	n/a
SG0230*G142[2]	230	2726	1463	4588	8,251	7,117	3274	1617	5269	10,602	9,618
SG0250*G129[2]	250	2726	1463	4588	9,169	n/a	n/a	n/a	n/a	n/a	n/a
SG0250*G133[2]	250	2726	1463	4588	9,200	n/a	n/a	n/a	n/a	n/a	n/a
SG0250*G142[2]	250	2726	1463	4588	8,251	7,247	3274	1617	5269	10,905	9,793
SG0250*G142[2]	250	2726	1450	4588	8,502	7,652	3274	1617	5269	11,080	10,340
SG0275*G129[2]	275	2726	1463	4588	9,421	n/a	n/a	n/a	n/a	n/a	n/a
SG0275*G133[2]	275	2726	1463	4588	9,200	n/a	n/a	n/a	n/a	n/a	n/a
SG0275*G142[2]	275	2726	1463	4588	8,502	7,201	3274	1617	5269	11,080	10,340
SG0300*G129[2]	300	2726	1463	4588	9,421	n/a	n/a	n/a	n/a	n/a	n/a
SG0300*G133[2]	300	2726	1463	4588	9,200	1,974	n/a	n/a	n/a	n/a	n/a
SG0300*G142[2]	300	2726	1463	4588	8,502	7,487	3274	1617	5269	11,080	10,340
SG0350*G219[2]	350	2899	1803	5268	11,100	9,510	3281	1954	5890	13,577	11,888
SG0350*G219[2]	350	2899	1803	5268	11,808	10,210	3281	1954	5890	14,285	12,763
SG0400*G219[2]	400	2899	1803	5268	11,100	9,510	3281	1954	5890	13,577	11,888
SG0400*G219[2]	400	2899	1803	5268	11,808	10,210	3281	1954	5890	14,285	12,763
SG0450*G219[2]	450	2899	1803	5268	11,808	10,210	3281	1954	5890	14,285	12,763
SG0500*G258[2]	500	2899	1803	5268	13,274	11,419	3281	1954	5890	15,635	14,274

1. Available in Prime Modular (MPS) configuration (MG vs SG). See Nomenclature.
2. Available in MPS configuration (MG vs SG) AND in Olympian Brand (LG). See Nomenclature.

	UNITED STATES ENVIRONMENTAL PROTECTION AGENCY **2023 MODEL YEAR** **CERTIFICATE OF CONFORMITY** **WITH THE CLEAN AIR ACT**	**OFFICE OF TRANSPORTATION** **AND AIR QUALITY** **ANN ARBOR, MICHIGAN 48105**

Certificate Issued To: FPT Industrial S.p.A. (U.S. Manufacturer or Importer) **Certificate Number: PFPXL10.3TR3-032**	**Effective Date:** **11/15/2022** **Expiration Date:** **12/31/2023**	**Byron J. Bunker, Division Director** **Compliance Division**	**Issue Date:** **11/15/2022** **Revision Date:** **N/A**

Model Year: 2023 **Manufacturer Type:** Original Engine Manufacturer **Engine Family:** PFPXL10.3TR3	**Mobile/Stationary Indicator:** Stationary **Emissions Power Category:** 225<=kW<450 **Fuel Type:** Diesel **After Treatment Devices:** No After Treatment Devices Installed **Non-after Treatment Devices:** No Non-After Treatment Devices Installed

Pursuant to Section 111 and Section 213 of the Clean Air Act (42 U.S.C. sections 7411 and 7547) and 40 CFR Part 60, and subject to the terms and conditions prescribed in those provisions, this certificate of conformity is hereby issued with respect to the test engines which have been found to conform to applicable requirements and which represent the following engines, by engine family, more fully described in the documentation required by 40 CFR Part 60 and produced in the stated model year.

This certificate of conformity covers only those new compression-ignition engines which conform in all material respects to the design specifications that applied to those engines described in the documentation required by 40 CFR Part 60 and which are produced during the model year stated on this certificate of the said manufacturer, as defined in 40 CFR Part 60.

It is a term of this certificate that the manufacturer shall consent to all inspections described in 40 CFR 1068 and authorized in a warrant or court order. Failure to comply with the requirements of such a warrant or court order may lead to revocation or suspension of this certificate for reasons specified in 40 CFR Part 60. It is also a term of this certificate that this certificate may be revoked or suspended or rendered void *ab initio* for other reasons specified in 40 CFR Part 60.

This certificate does not cover engines sold, offered for sale, or introduced, or delivered for introduction, into commerce in the U.S. prior to the effective date of the certificate.

The actual engine power may lie outside the limits of the Emissions Power Category shown above. See the certificate application for details.

United States Environmental Protection Agency Warranty Statement
(Stationary Emergency Compression-Ignition Generators)

Warranty Rights, Obligations and Coverage

Your emission-related warranty covers only components whose failure would increase an engine's emissions of any regulated pollutant where they are designed, built, and equipped to be free from defects in materials and workmanship under applicable regulations of section 213 of the clean air act. To receive information about how to make an emission-related warranty claim, and how to make arrangements for authorized repairs call **1-800-333-1322** or **www.generac.com**. Emission- related warranty claims may be denied without proof of proper maintenance or use, accidents beyond the control of the manufacturer, or act of God. Proper maintenance is specified in the Owner's Manual. Usage is limited to stationary emergency operations and 100 hours per year for maintenance and readiness testing. The warranty period begins when the engine is placed into service. Warranty periods for compression ignition engines greater than 25 horsepower is five years. This warranty is applicable to compression-ignition generator models; equal to and larger than an SD80 starting 1/1/2011, equal to and larger than an SD35 starting 1/1/2012, and all compression-ignition generator models starting 1/1/2013.

Important Note

This warranty statement explains your rights and obligations under the Emission Control System Warranty, which is provided to you by Generac pursuant to federal law. Note that this warranty shall not apply to any incidental, consequential or indirect damages caused by defects in materials or workmanship or any delay in repair or replacement of the defective part(s). This warranty is in place of all other warranties, expressed or implied. Specifically, Generac makes no other warranties as to the merchantability or fitness for a particular purpose. Any implied warranties which are allowed by law, shall be limited in duration to the terms of the express warranty provided herein. Some states do not allow limitations on how long an implied warranty lasts, so the above limitation may not apply to you.

2 Vicinity Map
1 1/2" = 1'-0"

NEW GENERATOR for CITY OF ROCKLIN

4081 Alvis Court
Rocklin, CA 95677

CONTACT LIST

BUILDING DESIGNER

SACRAMENTO DESIGN SYSTEMS
1751 CEBRIAN STREET
WEST SACRAMENTO, CA 95691
C.916.718.2612
F.916.375.0773

ELECTRICAL DESIGNER

CAPITOL CITY DESIGN
1751 CEBRIAN STREET
WEST SACRAMENTO, CA 95691
O. 916.375.0315
F.916.375.0773

SCOPE OF WORK

SUMMARY:
Install New Outside Diesel Generator on New Exterior Concrete Pad. 3

EXTERIOR:
1. Prepare Site for New Generator Pad and Conduits.
2. Remove Landscaping as required.
3. Remove Hardscape if required.
4. Install New Generator Pad.
5. Install New Fence per Electrical Layout.

PLUMBING:
1. No Work Required.

MECHANICAL:
1. No Work Required.

ELECTRICAL: 3
1. Install New Diesel Generator.
2. Modify Existing Electrical System as required for System Tie-In.

PROPERTY DATA

APN: 045-012-001-000
Property Address: 4081 Alvis Ct, Rocklin 95677 (Assessor's Info)
Acerage: 10.00

SHEET INDEX

ARCHITECTURAL

T1 Title Sheet

ELECTRICAL

E0.1 Symbols List, General Notes
E1.0 Site Plan - Electrical
E2.0 Generator Details

ACCESSIBILITY NOTES

GENERAL NOTE:
This Project is for Electrical Work only, to upgrade the Existing Electrical System and Componentry.

No Accessibility Work if Required.

FIRE SPRINKLER NOTES

No Fire Sprinkler Work is required. There is no Interior Work Proposed with this Remodel.

CODE SUMMARY

CODES USED:

2022 CALIFORNIA BUILDING CODE
2022 CALIFORNIA ELECTRICAL CODE
2019 CALIFORNIA EMERGENCY AND STANDBY POWER CODE
2022 CALIFORNIA ENERGY CODE
2022 CALIFORNIA FIRE CODE
2022 CALIFORNIA GREEN BUILDING CODE
2022 CALIFORNIA MECHANICAL CODE 2
2022 CALIFORNIA PLUMBING CODE
2015 NFPA 37 "Installation and Use of Stationary and Gas Turbines"
2019 NFPA 110 "Emergency and Stanby Power Systems"

DEFERRED PERMITS

The Following are Deferred Permits and are not a part of this Permit Set of Drawings:
1. NONE

Sacramento Design Systems
1751 Cebrian Street
West Sacramento, CA 95691
P - 916.718.2612
SacramentoDesignSystems.com

Professional Member of the CAIBD-California Institute of Building Design
CAIBD California Institute of Building Design

REVISIONS

No.	Description	Date
2	Fire Department Plan Review	04/29/2024
3	Fire Department Plan Review	06-12-2024

ANNOTATIONS

Room name
101
150 SF
ROOM TAG
(Room Name, Number, Square Footage)

SIM
1
A101
DETAIL CALLOUT
Detail Number / Sheet Number

View Name
1 Ref
A101
INTERIOR ELEVATION CALLOUT
View Name / Detail Number / Sheet Number

Ref
1
A101
EXTERIOR ELEVATION CALLOUT
View Name / Detail Number / Sheet Number

SIM
1
A101
SECTION CALLOUT
Detail Number / Sheet Number

1 View Name
1/8" = 1'-0"
VIEW TITLE CALLOUT
Detail Number / Scale

SECTION TAIL
Vertical Direction / Horizontal Direction

?
Keynote Tag Number

Elevation Target Callout

1i
Plumbing Equipment Number

1
Revision Number

101
Door Identifier Number

1i
Signage Identifier Number

1t
Speciality Equipment Number

1i
Wall Identifier Number

1t
Window Identifier Number

Detail Break Line

CEILING

RETURN AIR GRILLE

SUPPLY DIFFUSER

CEILING FAN

RECESSED CAN LIGHT FIXTURE

2 X 2 LAY-IN GRID LIGHT FIXTURE

General Drawing Legend
1/4" = 1'-0"

1 Site Plan Reference
1" = 100'-0"

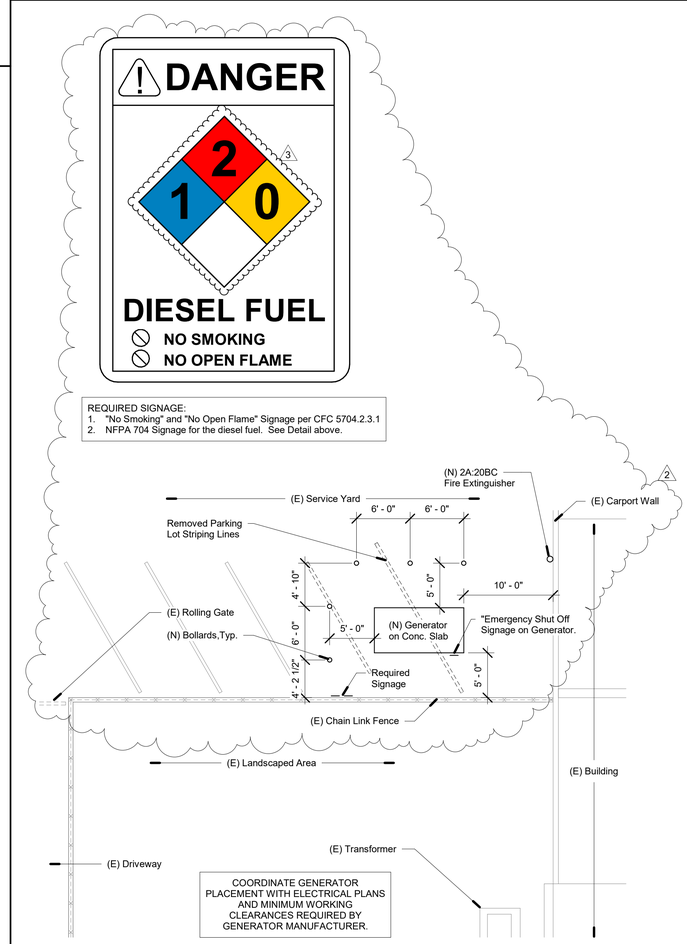

3 Generator Layout Plan
1/8" = 1'-0"

LICENSED ARCHITECT
TIMOTHY CREIGHTON SHIE
NO. C20420
REN. 01-31-25
STATE OF CALIFORNIA

PROJECT NAME:

City of Rocklin

PROJECT ADDRESS:

4081 Alvis Ct
Rocklin, CA

SHEET TITLE:

Title Sheet

Project Number	23-0606
Date	06-06-2023
Drawn by	MKEG
Checked by	MKEG

T1

Scale	As indicated

6/12/2024 1:55:55 PM

C:\sesa\Projects\2023\2023-022 City of Rocklin Generator\23022-E0.1.dwg Time:Jan29,2024-04:44pm Login:KyleD Dimscale:1 LTScale:0.5 Images:
Xrefs: "Xrefs"xbd 24 ccd.dwg
These plans and specifications shall not be reproduced or modified in whole or in part without written consent from Capitol City Design Inc. Furthermore, Capitol City Design Inc disclaims responsibility for these plans and specifications if they are used in whole or in part at any site other than the one for which they were specifically prepared.

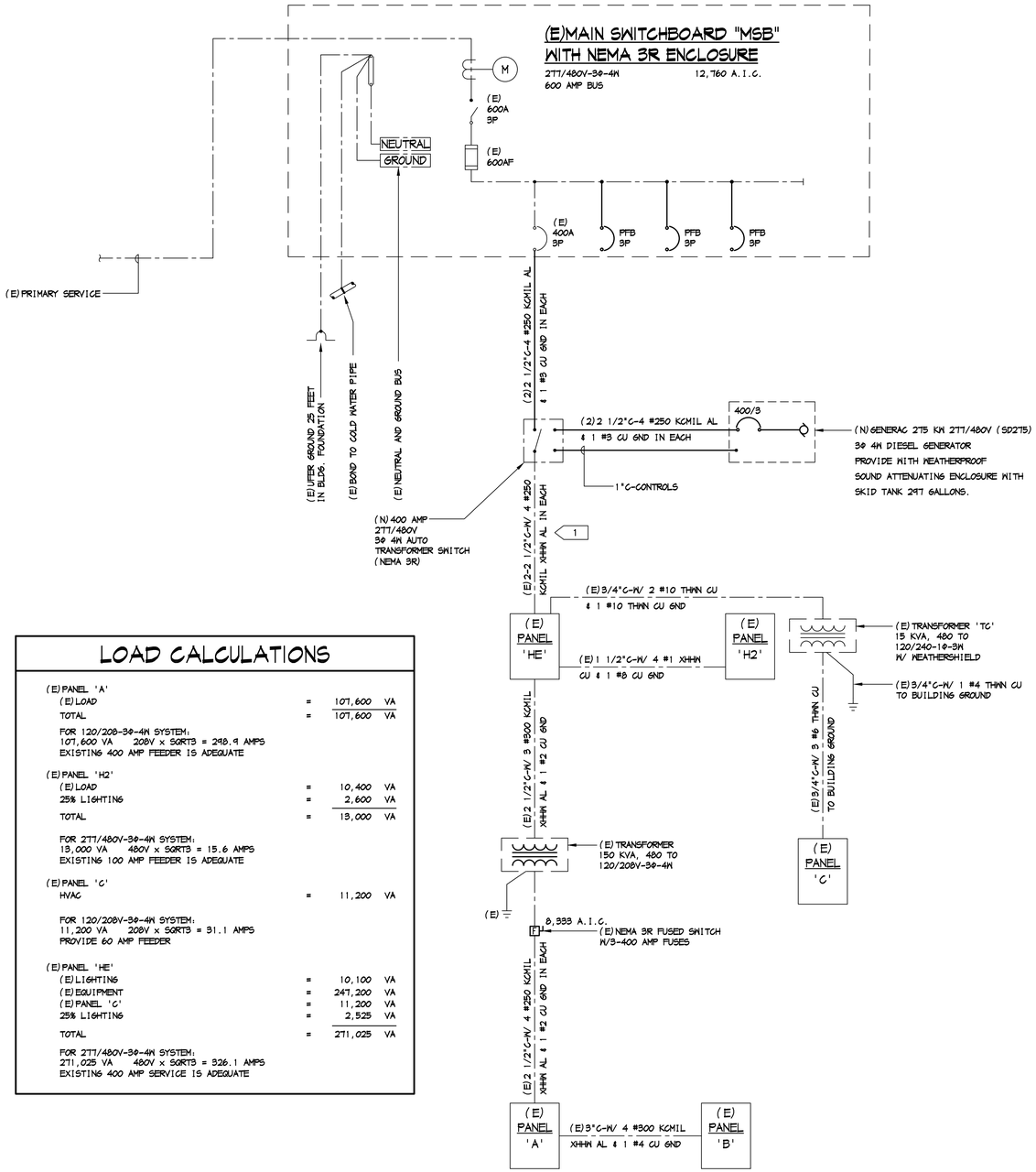

LOAD CALCULATIONS

(E)PANEL 'A'			
(E)LOAD	=	107,600	VA
TOTAL	=	107,600	VA
FOR 120/208-3Ø-4W SYSTEM: 107,600 VA 208V x SQRT3 = 298.9 AMPS EXISTING 400 AMP FEEDER IS ADEQUATE			
(E)PANEL 'H2'			
(E)LOAD	=	10,400	VA
25% LIGHTING	=	2,600	VA
TOTAL	=	13,000	VA
FOR 277/480V-3Ø-4W SYSTEM: 13,000 VA 480V x SQRT3 = 15.6 AMPS EXISTING 100 AMP FEEDER IS ADEQUATE			
(E)PANEL 'C'			
HVAC	=	11,200	VA
FOR 120/208V-3Ø-4W SYSTEM: 11,200 VA 208V x SQRT3 = 31.1 AMPS PROVIDE 60 AMP FEEDER			
(E)PANEL 'HE'			
(E)LIGHTING	=	10,100	VA
(E)EQUIPMENT	=	247,200	VA
(E)PANEL 'C'	=	11,200	VA
25% LIGHTING	=	2,525	VA
TOTAL	=	271,025	VA
FOR 277/480V-3Ø-4W SYSTEM: 271,025 VA 480V x SQRT3 = 326.1 AMPS EXISTING 400 AMP SERVICE IS ADEQUATE			

(E)ONE LINE DIAGRAM

NOT TO SCALE

1 EXISTING FEEDER TO BE INTERCEPTED AND ROUTED TO NEW TRANSFER SWITCH AS REQUIRED. TO BE VERIFIED IN FIELD.

GENERAL NOTES

1. THESE GENERAL NOTES ARE INTENDED TO ASSIST THE CONTRACTOR IN THE EXECUTION OF THE ELECTRICAL WORK AND TO BE INCLUDED IN CONJUNCTION WITH THE CONTRACT DOCUMENT DRAWINGS AND SPECIFICATION REQUIREMENTS.
2. PROCURE REQUIRED PERMITS AND LICENSES. PAY ALL NECESSARY FEES AND ARRANGE FOR INSPECTIONS REQUIRED BY LOCAL CODES, ORDINANCES AND UTILITY COMPANIES.
3. WORKMANSHIP SHALL BE OF THE HIGHEST GRADE. DEFECTIVE EQUIPMENT OR EQUIPMENT DAMAGED IN THE COURSE OF INSTALLATION OR TEST SHALL BE REPLACED OR REPAIRED IN A MANNER MEETING WITH THE ACCEPTANCE OF THE ARCHITECT.
4. INSTALL ALL EQUIPMENT, CONDUITS, OUTLETS, AND FIXTURES IN STRICT ACCORDANCE WITH ALL APPLICABLE CODES (CEC, STATE, COUNTY AND CITY).
5. DO NOT SCALE PLANS FOR FIXTURES, DEVICES, OR APPLIANCE LOCATIONS. USE FIGURED DIMENSIONS IF GIVEN OR CHECK MECHANICAL AND ARCHITECTURAL PLANS. ALSO REFER TO ACTUAL ON-SITE CONDITIONS.
6. ALL MATERIAL AND EQUIPMENT IS TO BE LISTED AND INSTALLED PER MANUFACTURER'S SPECIFICATIONS AND CEC 110.3.
7. ALL ELECTRICAL DEVICES AND EQUIPMENT, FIXTURES, CONDUITS AND WIRING SHOWN ON THESE PLANS ARE NEW, UNLESS OTHERWISE NOTED.
8. ALL SWITCHES SHALL BE SPECIFICATION GRADE 20 AMPS A.C., MOUNT ALL TOGGLE SWITCHES AT +48" MAX (TOP OF BOX) AFF UNLESS OTHERWISE NOTED. COORDINATE WITH ARCHITECTURAL DRAWINGS.
9. ALL DUPLEX RECEPTACLES SHALL BE SPECIFICATION GRADE, 20 AMP A.C., MOUNT ALL RECEPTACLE, TELEPHONE AND DATA OUTLETS AT +15" MIN (BOTTOM OF BOX) AFF UNLESS OTHERWISE NOTED. COORDINATE WITH ARCHITECTURAL DRAWINGS.
10. OUTLET BOXES INSTALLED IN FIRE WALLS SHALL BE ONE-PIECE STEEL AND INSTALLED IN SEPARATE (STAGGERED) STUD PENETRATIONS, MINIMUM 24 INCHES HORIZONTAL SEPARATION. FIRE WALLS SHALL BE MADE IN ACCORDANCE WITH CBC AND ELECTRICAL CODES.
11. THE FINAL LOCATION OF ALL OUTLETS SHALL BE VERIFIED WITH THE ARCHITECT AND/OR OWNER AT TIME OF CONSTRUCTION.
12. ALL OUTDOOR ELECTRICAL EQUIPMENT SHALL BE WEATHER-PROTECTED.
13. CONTRACTOR SHALL VERIFY THAT ALL LIGHTING FIXTURES, CEILING TRIMS, AND FRAMES ARE COMPATIBLE WITH CEILING SYSTEM INSTALLED.
14. CONTRACTOR SHALL COORDINATE LIGHT FIXTURE LOCATIONS AND INSTALLATIONS WITH THE MECHANICAL CONTRACTOR. MAINTAIN REQUIRED CLEARANCES (MINIMUM 3 INCHES) BETWEEN LIGHT FIXTURES AND MECHANICAL DUCTS OR EQUIPMENT FOR PROPER OPERATION, INSTALLATION AND/OR REMOVAL OF FIXTURES.
15. BEFORE SUBMITTING FOR ARCHITECT'S REVIEW AND PLACING ORDER FOR THE LIGHT FIXTURES, THE CONTRACTOR SHALL VERIFY THE VOLTAGE OF ALL THE LIGHTING FIXTURES TO MATCH THE VOLTAGE OF THE SERVICE PANEL, WHETHER THE VOLTAGE FOR THE LIGHT FIXTURES ARE SHOWN ON THE PLAN OR NOT.
16. PLACEMENT AND CIRCUITING OF EXIT SIGNS AND EGRESS LIGHTING SHALL COMPLY WITH CBC REQUIREMENTS.
17. ALL CONDUIT SHALL BE ROUTED CONCEALED UNLESS NOTED ON PLAN OR ACCEPTED BY THE ARCHITECT.
18. ALL WIRING SHALL BE INSTALLED IN METALLIC CONDUIT, UNLESS OTHERWISE NOTED. CONDUITS INSTALLED IN WALL AND CEILING MAY BE EMT WITH STEEL COMPRESSION TYPE FITTINGS. PVC WHERE INSTALLED UNDERGROUND AND/OR SLAB. INSTALL ALL CONDUITS IN ACCORDANCE WITH NECA STANDARDS OF INSTALLATION. MC CABLE IS ALLOWED ON THIS PROJECT.
19. CONDUCTORS, #12 AND LARGER, SHALL BE STRANDED COPPER WITH THHN/THWN INSULATION, UNLESS OTHERWISE NOTED.
20. PROVIDE WORKING CLEARANCE PER CEC 110.26. SERVICE PANEL, SUBPANELS, MOTOR AND HVAC DISCONNECT SWITCHES, CONTROL SECTIONS, HVAC EQUIPMENT, APPLIANCES, ETC.
21. PROVIDE A WARNING SIGN CLEARLY VISIBLE TO QUALIFIED PERSONS TO COMPLY WITH NEC AND CEC 110.16 OF POTENTIAL ELECTRIC ARC FLASH HAZARDS AT SWITCHBOARDS, PANELBOARDS, INDUSTRIAL CONTROL PANELS AND MOTOR CONTROL CENTERS THAT ARE LIKELY TO REQUIRE EXAMINATION, ADJUSTMENT, SERVICING, OR MAINTENANCE WHILE ENERGIZED.
22. CONTRACTOR SHALL SIZE ALL INTERIOR AND EXTERIOR BUILDING PULL BOXES AND UNDERGROUND PULL BOXES PER CEC 314.16 AND COMPLY WITH CEC 314.28 FOR INSTALLATION OF RACEWAYS AND WIRING AS REQUIRED BY CODE, UNLESS OTHERWISE NOTED.
23. WHERE ACCESSIBILITY IS NOT AVAILABLE TO ELECTRICAL OUTLETS, DEVICES AND/OR EQUIPMENT, COORDINATE WITH THE ARCHITECT FOR PROVISIONS TO PROVIDE ACCESSIBILITY TO THEM.
24. ALL TERMINATION PROVISIONS OF EQUIPMENT FOR CIRCUITS RATED 100 AMPERES OR LESS SHALL BE RATED AT 60°C. ALL TERMINATION PROVISIONS OF EQUIPMENT FOR CIRCUITS RATED OVER 100 AMPERES SHALL BE RATED AT 75°C PER CEC 110.14(C).
25. BUILDING SERVICE AND SUBPANELS TO COMPLY WITH CEC 110.9 AND 110.10 INTERRUPTING RATING AND BRACING. PROVIDE A.I.C. CALCULATIONS FOR SUBPANELS IF INTERRUPTING RATING TO BE USED IS LOWER THAN MAIN SERVICE RATING.
26. CONTRACTOR SHALL PROVIDE MEANS TO SIMULTANEOUSLY DISCONNECT ALL UNGROUNDED CONDUCTORS IN MULTIWIRE BRANCH CIRCUITS PER CEC 210.4(B).
27. COORDINATE ALL ELECTRICAL SERVICES WITH THE RESPECTIVE UTILITY COMPANIES AND PROVIDE ALL TRENCHING, CONDUITS, WIRING, METER FACILITIES AND OUTLETS REQUIRED BY THEM. VERIFY EXACT AIC RATING WITH PG&E PRIOR TO BID FOR ALL EQUIPMENT.
28. TRENCHING AND BACKFILLING SHALL BE IN ACCORDANCE WITH THE SPECIFICATIONS. PRIOR TO THE TRENCHING, ETC. AND THE INSTALLATION OF THE ELECTRICAL SYSTEM, ALL WORK SHALL BE STAKED OUT.
29. MINIMUM COVERAGE FOR UNDERGROUND CONDUIT TO BE 24", UNLESS NOTED OTHERWISE. PROVIDE MINIMUM OF 12" SEPARATION BETWEEN THE POWER AND ALL LOW VOLTAGE CONDUITS.
30. PROVIDE METAL DETECTION STRIP ABOVE THE NONMETAL UNDERGROUND CONDUITS.
31. ALL UNDERGROUND SERVICE CONDUITS SHALL BE SEALED PER CEC 230.8.
32. SEPARATION OF THE ELECTRICAL CIRCUITS FOR ELECTRICAL ENERGY MONITORING IS REQUIRED. ELECTRICAL POWER DISTRIBUTION SYSTEM SHALL INCLUDE MEASUREMENT DEVICES CAPABLE OF MONITORING THE ELECTRICAL ENERGY USAGE OF LOAD TYPES PER CEC 130.5.

SYMBOLS LIST

SYMBOL	DESCRIPTION
	LIGHTING FIXTURE, SURFACE OR PENDANT MOUNTED IN CEILING
	LIGHTING FIXTURE, RECESSED MOUNTED IN CEILING
	LIGHTING FIXTURE, SURFACE MOUNTED ON WALL
	LIGHTING FIXTURE, RECESSED, T-BAR LAY-IN OR FLANGED IN CEILING
	LIGHTING FIXTURE, SURFACE MOUNTED ON CEILING
	STRIP LIGHTING FIXTURE, SURFACE OR CHAIN HUNG ON CEILING
	EXIT LIGHT FIXTURE, WALL MOUNTED WITH ARROWS AS SHOWN
	EMERGENCY LIGHT
	LIGHTING FIXTURE, MOUNTED ON POLE WITH SINGLE/DOUBLE HEADS
	LIGHTING FIXTURE, MOUNTED ON POLE (POST-TOP HEAD)
A	FIXTURE TAG - 'A' DENOTES FIXTURE TYPE, SEE LIGHTING FIXTURE SCHEDULE
	SINGLE POLE TOGGLE SWITCH, 20A, 120-277V AT +48" MAX (TOP OF BOX)
3	THREE WAY TOGGLE SWITCH 20A, 120-277V AT +48" MAX (TOP OF BOX)
a,b,c	SUBSCRIPT DENOTES OUTLET OR FIXTURE CONTROLLED AT +48" MAX (TOP OF BOX)
LV D	LOW VOLTAGE TOGGLE SWITCH, 20A, 120-277V AT +48" MAX (TOP OF BOX), 'D' DENOTES DIMMER
D	DIMMING SWITCH 20A, 120-277V AT +48" MAX (TOP OF BOX)
VS	VACANCY SENSOR "VS" DESIGNATION 20A, 120-277V AT +48" MAX (TOP OF BOX)
T	THERMAL OVERLOAD SWITCH
D	SINGLE OCCUPANCY SENSOR SWITCH WALL MOUNTED AT +48" MAX (TOP OF BOX), NLIGHT #NSX2PNH 120/277V. 'D' DENOTES DIMMER
	FOURPLEX RECEPTACLE OUTLET 20A, 125V, +15" MIN (BOTTOM OF BOX)
	DUPLEX RECEPTACLE OUTLET 20A, 125V, +15" MIN (BOTTOM OF BOX)
	MOUNT OUTLET ABOVE COUNTER OR BACKSPLASH
	DUPLEX RECEPTACLE OUTLET 20A, 125V, CEILING MOUNTED
	208V 3 PH RECEPTACLE OUTLET
	208V 1 PH RECEPTACLE OUTLET
	DUPLEX RECEPTACLE FLOOR OUTLET 20A, 125V FLUSH IN FINISH FLOOR WITH BRASS TRIM
	DUPLEX RECEPTACLE OUTLET 20A, 125V, +15" MIN (BOTTOM OF BOX), ISOLATED GROUND
	TELEPHONE/COMPUTER OUTLET WALL/FLOOR MOUNTED/STUB 3/4"C-MT TO ABOVE ACCESSIBLE CLG
	MAIN SWITCHBOARD
	LIGHTING OR DISTRIBUTION PANEL
	TERMINAL CABINET
J	JUNCTION BOX
PB	PULL BOX
	MOTOR STARTER, SEE MP&S. CONNECT AS REQUIRED
F	HEAVY DUTY SAFETY TYPE DISCONNECT SWITCH, SIZE & NEMA TYPE AS REQUIRED, F=FUSED
	MOTOR - MP&S
	EXHAUST FAN - MP&S
EF 1	MECHANICAL EQUIPMENT I.D. TAG - MP&S
1	FLAG NOTE SHOWN ON SAME SHEET
	CIRCUIT CONCEALED IN CEILING OR WALL
	CIRCUIT CONCEALED IN FLOOR OR UNDERGROUND
	EXISTING CIRCUIT
	LOW VOLTAGE CABLE
	HOMERUN TO PANELBOARD OR TERMINAL CABINET
	DENOTES # OF #12 WIRES, NO MARKS = 2 #12, 1/2"C, CURVED HATCH DENOTES EQUIPMENT GROUND, DOT DENOTES ISOLATED GROUND, OTHERS AS NOTED
	TELEPHONE TERMINAL BOARD 'TTB': 4'x8'x3/4" PLYWOOD BACKBOARD WITH FOURPLEX RECEPTACLE & (1)#6 GND, UON

NOTE:
SYMBOLS INDICATED ABOVE MAY NOT NECESSARILY APPEAR AS PART OF THESE DRAWINGS IF NOT REQUIRED.

ABBREVIATIONS

AFF	ABOVE FINISHED FLOOR
C	CONDUIT
CLG	CEILING
(E)	EXISTING
EM	DENOTES EMERGENCY FIXTURE. PROVIDE WITH 90-MINUTE BATTERY BACK-UP BALLAST, SEE LIGHTING PLANS FOR LOCATIONS AND QUANTITIES.
GFCI	GROUND FAULT CIRCUIT INTERRUPT
IG	ISOLATED GROUND
MP&S	SEE MECHANICAL PLANS & SPECIFICATIONS
MT	EMPTY CONDUIT WITH NYLON PULL ROPE
(N)	NEW
NIES	NOT IN ELECTRICAL SECTION OF THESE PLANS & SPECIFICATIONS
NL	NIGHT LIGHT - FIXTURE TO BE UNSWITCHED
PFB	PROVISION FOR FUTURE BREAKER
PNL	PANELBOARD
(R)	RELOCATED
TTB	TELEPHONE TERMINAL BOARD
(TYP)	TYPICAL
UG	UNDERGROUND
UON	UNLESS OTHERWISE NOTED
WP	WEATHERPROOF, RECEPTACLE COVERS SHALL BE "WEATHERPROOF WHILE IN USE". (CEC 406.9)

CAPITOL CITY DESIGN, INC.
Electrical Engineering Consultants
1751 Cebrian Street
West Sacramento CA 95691
916.375.0135
916.375.0773 fax
www.capcitydesign.com

electrical engineer

Jan 29 2024

PROFESSIONAL ENGINEER ROBERT B. CLINE No. E23168 Exp. 06-30-24 ELECTRICAL STATE OF CALIFORNIA

electrical contractor

project title
CITY OF ROCKLIN GENERATOR

4081 ALVIS COURT
ROCKLIN CA, 95677

revisions

sheet title
SYMBOLS LIST
GENERAL NOTES
PANEL SCHEDULE

job no	2023-022
date	03/16/2023
designer	TB
drafter	KB

E0.1

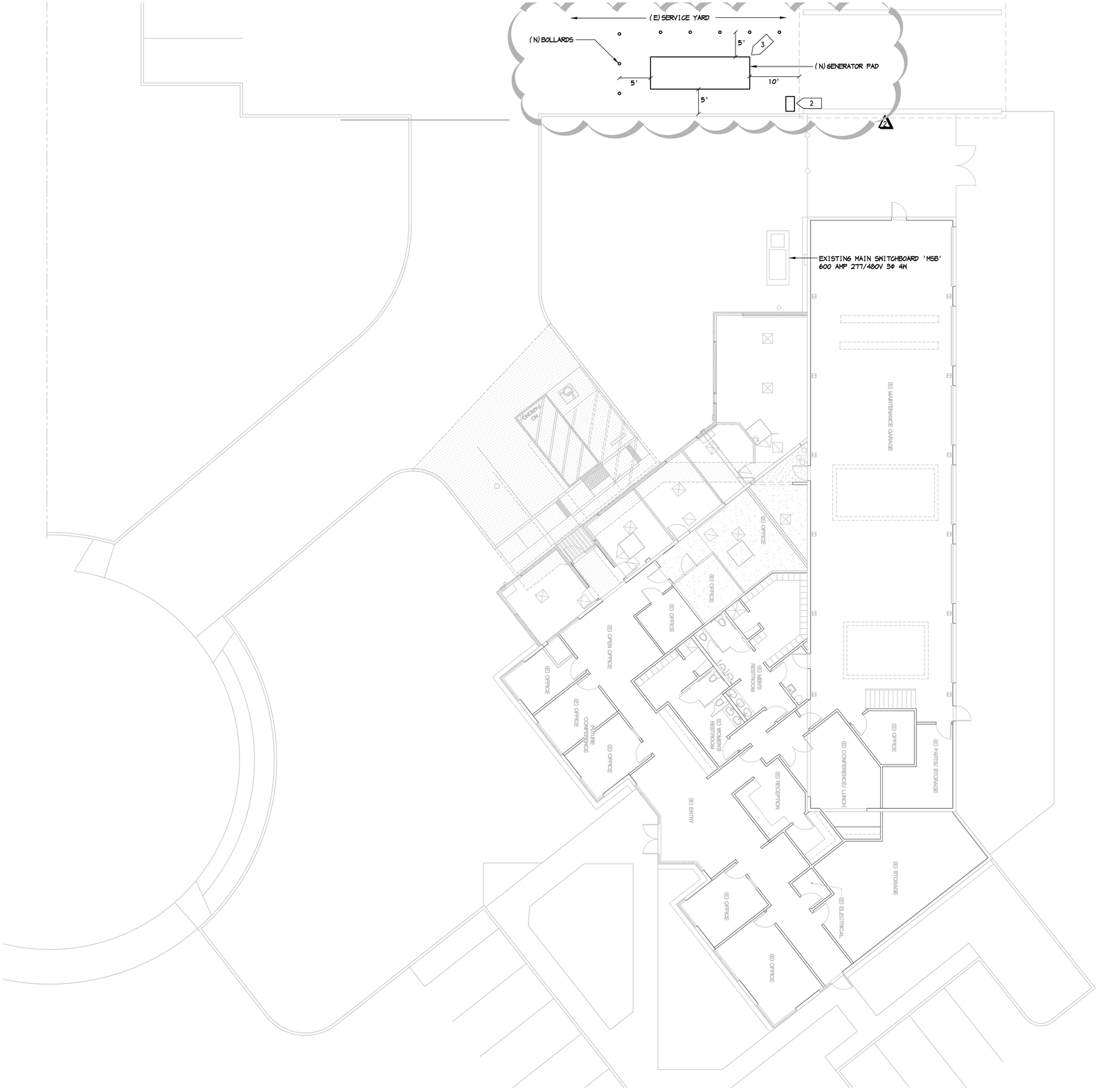

SITE PLAN - ELECTRICAL

SCALE: 1" = 10'-0"

SHEET NOTES

1. NOT USED
2. NEW AUTO TRANSFER SWITCH 400 AMP 277/480V 3 4W NEMA 3R
3. VERIFY SIZE OF GENERATOR PAD WITH GENERATOR PROVIDED. MINIMUM 20'x 6'6" CONCRETE REINFORCED PAD.

CAPITOL CITY DESIGN, INC.
Electrical Engineering Consultants

1751 Cebrian Street
West Sacramento CA 95691
916.375.0135
916.375.0773 fax
www.capcitydesign.com

electrical engineer

Jun 12 2024

REGISTERED PROFESSIONAL ENGINEER
ROBERT B. CLAYE
No. E23168
Exp. 06-30-24
ELECTRICAL
STATE OF CALIFORNIA

electrical contractor

project title

CITY OF ROCKLIN GENERATOR

4081 ALVIS COURT
ROCKLIN CA, 95677

revisions

1	PCC	03-1-24
2	FIRE COMMENTS	04-29-24
3	FIRE COMMENTS	06-12-24

sheet title

SITE PLAN - ELECTRICAL

job no	2023-022
date	03/16/2023
designer	TB
drafter	KB

E1.0

C:\sdak\Projects\2023\2023-022 City of Rocklin Generator\23022-E1.0.dwg Time:Jun12,2024-01:29pm Login:Kyleb Dimscale:120 LTScale:0.5 Images: Xrefs: "\Xrefs\vbd 24 cad.dwg" "\Xrefs\23\site.dwg" "\Xrefs\FLOORPLAN 10-3-14.dwg
These plans and specifications shall not be reproduced or modified in whole or in part without written consent from Capitol City Design Inc. Furthermore, Capitol City Design Inc disclaims responsibility for these plans and specifications if they are used in whole or in part at any site other than the one for which they were specifically prepared.

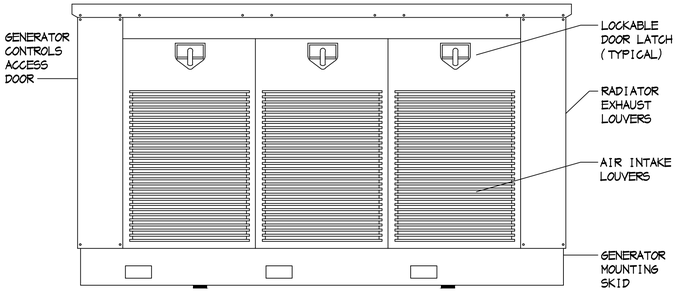

GENERATOR EXTERIOR ELEVATION VIEW

NOT TO SCALE

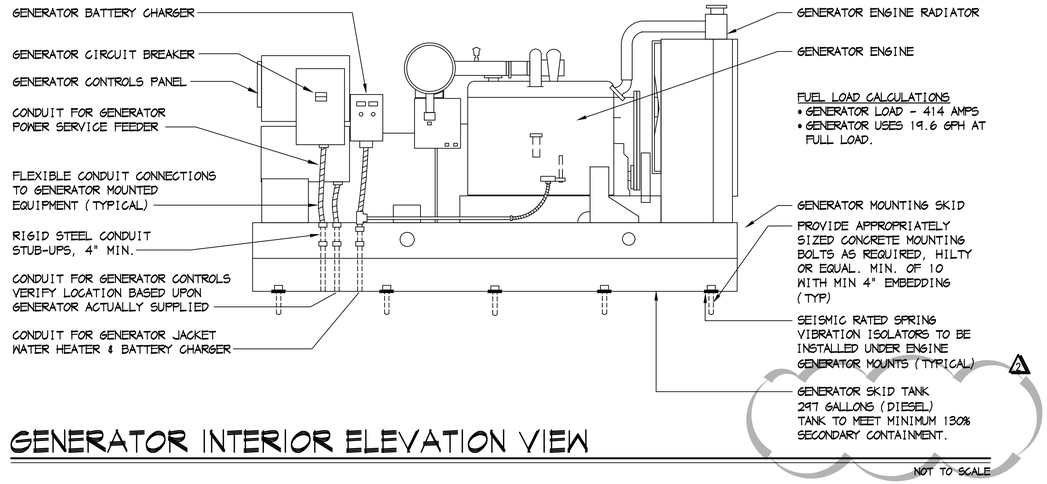

GENERATOR INTERIOR ELEVATION VIEW

NOT TO SCALE

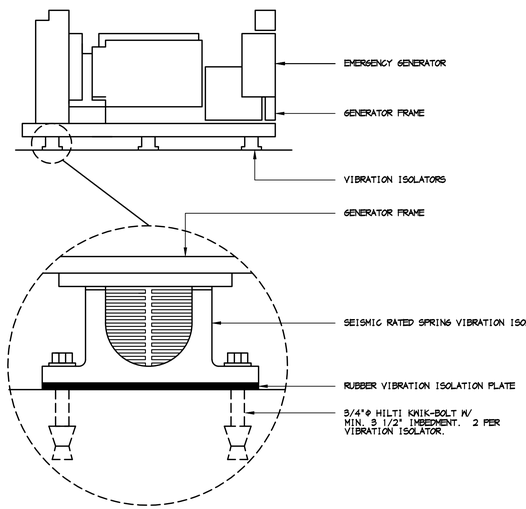

GENERATOR VIBRATION ISOLATORS

NOT TO SCALE

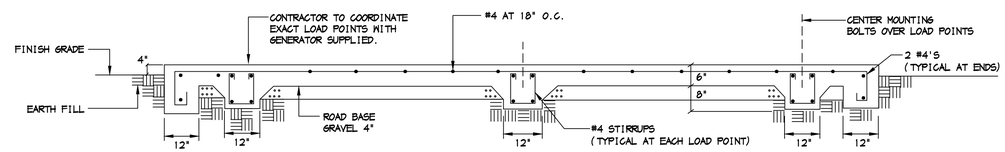

1/2.0 ENGINE GENERATOR BASE DETAIL SECTION

SCALE 1/2"=1'-0"

NOTE: CONTRACTOR TO COORDINATE EXACT SIZE OF PAD WITH GENERATOR SUPPLIED. ADJUST SIZE ACCORDINGLY.

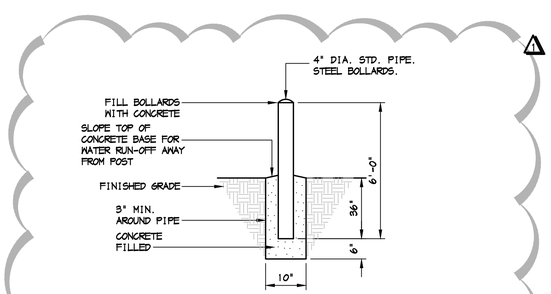

PROTECTIVE GUARD POST DETAIL

NOT TO SCALE

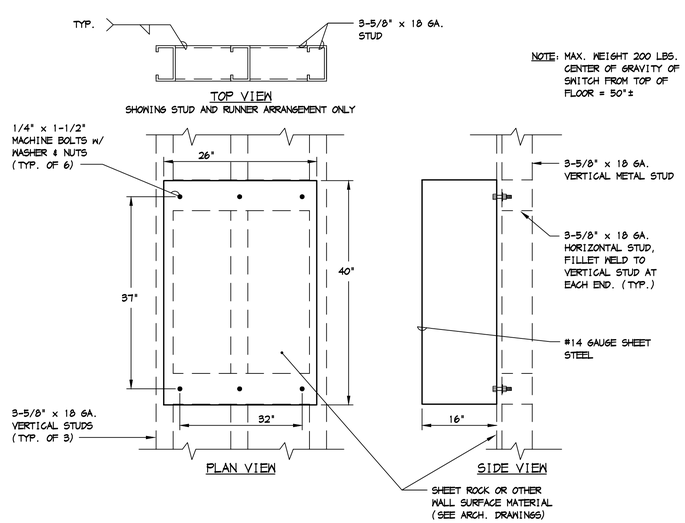

TRANSFER & BYPASS SWITCH WALL MTD. DETAIL

NOT TO SCALE

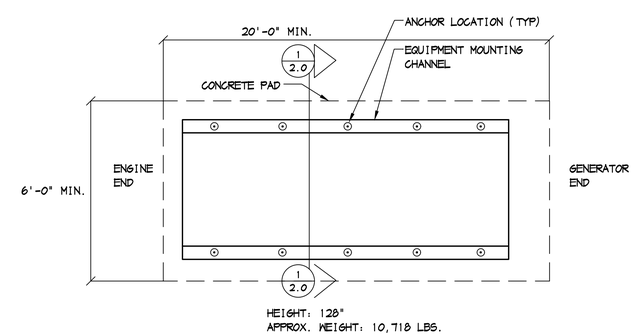

EMERGENCY ENGINE GENERATOR BASE DETAIL

NOT TO SCALE

CAPITOL CITY DESIGN, INC.
Electrical Engineering Consultants
1751 Cebrian Street
West Sacramento CA 95691
916.375.0135
916.375.0773 fax
www.capcitydesign.com

electrical engineer

Apr 29 2024

REGISTERED PROFESSIONAL ENGINEER ROBERT B. CRANE No. E23168 Exp. 06-30-24 ELECTRICAL STATE OF CALIFORNIA

electrical contractor

project title

CITY OF ROCKLIN GENERATOR

4081 ALVIS COURT
ROCKLIN CA, 95677

revisions

1	PCC	03-1-24
2	FIRE COMMENTS	04-29-24

sheet title

job no	2023-022
date	03/16/2023
designer	TB
drafter	KB

E2.0

C:\acad\Projects\2023\2023-022 City of Rocklin Generator\23022-E2.0.dwg Time:Apr29,2024-02:38pm Login:KyleB Dimscale:1 LTScale:0.5 Images: Xrefs: ~\Xrefs\xbd 24 ccd.dwg
These plans and specifications shall not be reproduced or modified in whole or in part without written consent from Capitol City Design Inc. Furthermore, Capitol City Design Inc disclaims responsibility for these plans and specifications if they are used in whole or in part at any site other than the one for which they were specifically prepared.

Exhibit A

Rocklin Corporation Yard
045-012-001-000
045-012-002-000
045-390-005-000
045-390-022-000
045-390-008-000
ALVIS CT
CITRUS AVE
045-350-009-000
045-350-008-000
045-012-003-000
045-012-004-000
PACIFIC ST
045-013-024-000
045-013-023-000
045-013-002-000
045-013-003-000
045-013-004-000
045-013-005-000
045-013-022-000
045-013-007-000
TAYLOR RD
045-041-044-000
045-041-045-000
045-041-025-000
Legend
City Boundary
Project Area

ROCKLIN
CALIFORNIA

CITY OF ROCKLIN BID SUMMARY

PROJECT: Corporation Yard Emergency Generator	
DATE: October 16, 2024	TIME: 1:00pm

Name/Address/Phone of Bidder	Bid Amount	Alt. Bid Amt	Addendum(S) Acknowledged	Bid Bond / Cashier Check
1. James Day Construction Inc.	$212,602.00	$	3	✓
2. Unwired BB LLC.	$205,000.00	$	3	✓
3. Vanden Bos Electric Inc.	$280,900.00	$	3	✓
4. Sauren Construction Inc.	$214,703.00	$	3	✓
5. Proterra Builders Inc.	$245,800.00	$	3	✓
6.	$	$		
7.	$	$		
8.	$	$		
9.	$	$		
10.	$	$		

Diane Ahn
Diane Ahn, Finance

10/16/2024
Date

Avinta Singh, City Clerk

10/16/2024
Date

ROCKLIN
CALIFORNIA

City Council Staff Report

Subject: Landfill Monitoring Services Amendment No. 2

Date: February 25, 2025

Submitted By: Rick Lawrence, Public Works Manager
Justin Nartker, Public Works Director

Department: Public Works

Recommendation:
Adopt a Resolution of the City Council of the City of Rocklin Approving Amendment No. 2 to the Contract for Services with Tetra Tech, Inc. and Authorizing the City Manager to Execute Amendment No. 2.

Background:
In compliance with the requirements of the Placer County Department of Health and Human Services Notice and Order 98-02, and the associated Updated Work Plan for Installation of Gas Extraction System, Former City of Rocklin Landfill, 4420 Rocklin Road, Rocklin, California, the City of Rocklin is required to perform operations, maintenance, and reporting for the Landfill gas extraction system at the former City landfill located at 4420 Rocklin Road.

On December 14, 2021, the City Council adopted Resolution No. 2021-219, approving a contract with Tetra Tech, Inc. for operations, maintenance, monitoring, and reporting services for the soil vapor extraction system at 4420 Rocklin Road. The initial contract term was twelve (12) months, with the option for two one-year extensions, for a not-to-exceed amount of $23,480.27 per year.

The City exercised its first one-year extension in December 2022, extending the contract through December 14, 2023. Amendment No. 1 was subsequently executed to confirm the final contract extension from December 14, 2023, to December 14, 2024.

Between December 14, 2022, and December 14, 2023, additional on-call testing and services were required, bringing the total contract amount to $26,254.80. Similarly, from December 14, 2023, to December 14, 2024, additional services increased the total to $26,881.80.

Upon reviewing the contract, staff identified that the Schedule of Fees for both the 2022-2023 and 2023-2024 terms was inadvertently omitted from the amended contract. The total cost for services rendered from December 14, 2022, through December 14, 2024, is $76,616.87.

To correct this oversight, Amendment No. 2 is being presented for approval, formally updating the contract amount to reflect the actual costs incurred, including the additional on-call services provided during both contract extension periods.

Fiscal Impact:
There is no direct impact on the General Fund. Sufficient funds are available in the Fiscal Year 2024/25 Operating Budget within the Boroski Landfill Monitoring Fund (727).

ATTACHMENTS:
1. Resolution and Amendment No. 2
2. Original Contract, Letter, and Amendment No. 1

RESOLUTION NO. 2025-
RESOLUTION OF THE CITY COUNCIL OF THE CITY OF ROCKLIN
APPROVING AMENDMENT NO. 2 TO THE CONTRACT FOR
RETROACTIVE SERVICES WITH TETRA TECH, INC. AND
AUTHORIZING THE CITY MANAGER TO EXECUTE
AMENDMENT NO. 2

WHEREAS, the City of Rocklin is required to perform operations, maintenance, and reporting for the Landfill gas extraction system at the former City landfill located at 4420 Rocklin Road, Rocklin, California to comply with the requirements of the Placer County Department of Health and Human Services Notice and Order 98-02 (the Order), and the associated Updated Work Plan for Installation of Gas Extraction System, Former City of Rocklin Landfill; and

WHEREAS, on December 14, 2021, the City Council of the City of Rocklin approved Resolution 2021-219 with Tetra Tech, Inc. to provide operations, maintenance, monitoring and reporting services of the soil vapor extraction system located at 4420 Rocklin Road, Rocklin, California; and

WHEREAS, the Agreement was for an initial 12-month period, starting on December 14, 2021, at a cost of $23,480.27 and renewable for two additional one-year terms at the City's option; and

WHEREAS, the City exercised its option in December 2022 to extend the contract one (1) year, in writing, from December 14, 2022, to December 14, 2023, and Amendment No. 1 was subsequently executed to confirm the Contract's final year of the term from December 14, 2023, to December 14, 2024; and

WHEREAS, additional on-call testing and other services were required between December 14, 2022 and December 14, 2023 in the amount of $26,254.80, as well as between December 14, 2023, and December 14, 2024 in the amount of $26,881.80, for a total contract cost of $76,616.87; and

WHEREAS, there is no fiscal impact as sufficient funds are available in the fiscal year 2024/25 Operating Budget within the Boroski Landfill Monitoring Fund (727).

NOW, THEREFORE, the City Council of the City of Rocklin does resolve as follows:

Section 1. Amendment No. 2 to the Contract for Services with Tetra Tech, Inc., is approved and the City Manager is authorized to execute Amendment No. 2 in substantially the form attached hereto as Exhibit "A."

PASSED AND ADOPTED this 25th day of February, 2025, by the following vote:

AYES: Councilmembers:
NOES: Councilmembers:
ABSENT: Councilmembers:
ABSTAIN: Councilmembers:

_____
Jill Gayaldo, Mayor

ATTEST:

_____
Avinta Singh, City Clerk

AMENDMENT NO. 2
TO CONTRACT FOR SERVICES BETWEEN
THE CITY OF ROCKLIN AND TETRA TECH, INC.

This Second Amendment is entered into on February 25, 2025, by and between the City of Rocklin, a municipal corporation ("City"), and Tetra Tech, Inc., ("Contractor") who agree as follows:

RECITALS

WHEREAS, the City and Contractor entered into a Contract for Services dated December 14, 2021, to provide monitoring, site visits, reports, as well as on-call and repair services for the landfill gas extraction system at the former City of Rocklin landfill located at 4420 Rocklin Road, Rocklin, CA (hereafter "Agreement"); and

WHEREAS, the contract was for an initial 12-month period, starting on December 14, 2021, plus two additional one-year terms, ending December 14, 2024;

WHEREAS, the cost for services for the period of December 14, 2022 through December 14, 2023, was $26,254.80;

WHEREAS, the Amendment No. 1 extended the Contract for Services from December 14, 2023, to December 14, 2024;

WHEREAS, additional testing and monitoring services were necessary for the period of December 14, 2022, through December 14, 2023, in the amount of $26,254.80;

WHEREAS, additional testing and monitoring services were necessary for the period of December 14, 2023, through December 14, 2024, in the amount of $26,881.80;

WHEREAS, upon review of the contract as amended, staff discovered that the Schedule of Fees for the terms of December 14, 2022 through December 14, 2023 and December 14, 2023, through December 14, 2024 were inadvertently excluded from the contract as amended;

WHEREAS, the total cost for services rendered for the duration between December 14, 2021 and December 14, 2024 is $76,616.87; and

WHEREAS, funding is available in the Boroski Landfill Monitoring Fund (727) for the costs associated with the Second Amendment to the Agreement.

AGREEMENT

NOW, therefore, the City and Contractor hereby agree to amend the Contract for Services as follows:

1. Section "2," "Compensation," is amended to increase the not to exceed amount of the Contract to $76,616.87.

2. Exhibit C is amended to authorize the respective annual fees, including those fees for additional services, as set forth in Exhibit C, attached hereto, and incorporated herein.

3. The parties agree that this Amendment may be executed and delivered by digital electronic signatures (DocuSign), and that such signatures appearing on this Amendment are the same as handwritten signatures for the purposes of validity, enforceability, and admissibility.

Except as set forth in this Second Amendment, the Contract for Services is unaffected and shall continue in full force and effect in accordance with its terms. If there is a conflict between this Second Amendment and the Contract for Services, the terms of this Second Amendment will prevail.

Due to the need to affirm the Schedule of Fees with the corresponding period during services were retroactively rendered, this Second Amendment shall be deemed effective December 14, 2022.

"CITY"

By: _____
Aly Zimmermann, City Manager

"CONTRACTOR"

By: _____
Keith Hoofard, Project Manager

By: _____
Betty Li, Operations Manager

APPROVED AS TO FORM:

By: _____
Matthew McOmber, City Attorney

ATTEST:
By: _____
Avinta Singh, City Clerk

EXHIBIT C

Schedule of Fees

The total compensation for the Scope of Services identified in Exhibit A shall not exceed $76,616.87. The cost breakdown has been included below.

December 14, 2021 – December 14, 2022

Project Cost Summary

26-Oct-21

City of Rocklin - 2022 SVE O&M

City of Rocklin — **Attention:** Mr. Richard Lawrence

Phases / Tasks		Project Total		Task 1 Monitoring, Site Visits, and Reporting		Task 2 On-Call and Repair Services	
		178 hrs	$ 23,480.27				
Tetra Tech Labor	Hrly Rate	Tot Est. Hrs	Total Est. Cost	Hours	Cost	Hours	Cost
Project Manager	$172.00	36.0	$ 6,192.00	32.0	$ 5,504.00	4.0	$ 688.00
Staff Scientist/Engineer	$98.00	140.0	$ 13,720.00	120.0	$ 11,760.00	20.0	$ 1,960.00
Project Control	$87.00	2.0	$ 174.00	2.0	$ 174.00	-	$ -
Subtotal Tetra Tech Labor		178.0 hrs	$ 20,086.00	154.0	$ 17,438.00	24.0	$ 2,648.00
		Markup	$903.87	4.50%	$784.71		$119.16
--Total Tetra Tech Labor			$ 20,989.87		$ 18,222.71		$ 2,767.16
Travel			Total Est. Cost		Cost		Cost
Mileage			$ 84.00		$ 56.00		$ 28.00
Phone			$ 90.00		$ 60.00		$ 30.00
Subtotal Travel			$ 174.00		$ 116.00		$ 58.00
		Markup	$ 17.40	10.00%	$ 11.60		$ 5.80
--Total Travel			$ 191.40		$ 127.60		$ 63.80
Materials & Equipment			Total Est. Cost		Cost		Cost
Drive Belts			$ 120.00		$ 120.00		$ -
Lube			$ 180.00		$ 180.00		$ -
Synthetic Oil			$ 240.00		$ 240.00		$ -
Simple Green/Rags			$ 60.00		$ 60.00		$ -
Calibration Gas			$ 150.00		$ 150.00		$ -
Subtotal Materials & Equipment			$ 750.00		$ 750.00		$ -
		Markup	$75.00	10.00%	$75.00		
--Total Materials & Equipment			$ 825.00		$ 825.00		$ -
Other Direct Costs			Total Est. Cost		Cost		Cost
LFL Sensor			$ 600.00		$ 600.00		$ -
GEM 2000 Rent			$ 740.00		$ 740.00		$ -
Subtotal Other Direct Costs			$ 1,340.00		$ 1,340.00		$ -
		Markup	$134.00	10.00%	$134.00		
--Total Other Direct Costs			$ 1,474.00		$ 1,474.00		$ -
Project/Task --Total			$ 23,480.27		$ 20,649.31		$ 2,830.96
PROJECT Total			$ 23,480.27				

December 14, 2022 – December 14, 2023

Project Cost Summary

15-Dec-22

City of Rocklin - 2023 SVE O&M

City of Rocklin

Attention: Mr. Richard Lawrence

Phases / Tasks		Project Total		Task 1 Monitoring, Site Visits, and Reporting		Task 2 On-Call and Repair Services	
		178 hrs	$ 26,254.80				
Tetra Tech Labor	Hrly Rate	Tot Est. Hrs	Total Est. Cost	Hours	Cost	Hours	Cost
Project Manager - Keith D Hoofard	$180.00	36.0	$ 6,480.00	32.0	$ 5,760.00	4.0	$ 720.00
Staff Scientist/Engineer - ZackLaforet	$115.00	70.0	$ 8,050.00	60.0	$ 6,900.00	10.0	$ 1,150.00
Project Control - Breanne M Reitler	$90.00	2.0	$ 180.00	2.0	$ 180.00	-	$ -
Staff Scientist/Engineer - Kettwich, Alex	$115.00	70.0	$ 8,050.00	60.0	$ 6,900.00	10.0	$ 1,150.00
Subtotal Tetra Tech Labor		178.0 hrs	$ 22,760.00	154.0	$ 19,740.00	24.0	$ 3,020.00
		Markup	$1,024.20	4.50%	$888.30		$135.90
--Total Tetra Tech Labor			$ 23,784.20		$ 20,628.30		$ 3,155.90
Travel			Total Est. Cost		Cost		Cost
Mileage			$ 96.00		$ 64.00		$ 32.00
Subtotal Travel			$ 96.00		$ 64.00		$ 32.00
		Markup	$ 9.60	10.00%	$ 6.40		$ 3.20
--Total Travel			$ 105.60		$ 70.40		$ 35.20
Materials & Equipment			Total Est. Cost		Cost		Cost
Drive Belts			$ 120.00		$ 120.00		$ -
Lube			$ 180.00		$ 180.00		$ -
Synthetic Oil			$ 240.00		$ 240.00		$ -
Simple Green/Rags			$ 60.00		$ 60.00		$ -
Calibration Gas			$ 150.00		$ 150.00		$ -
Subtotal Materials & Equipment			$ 750.00		$ 750.00		$ -
		Markup	$75.00	10.00%	$75.00		

Project Cost Summary

15-Dec-22

City of Rocklin - 2023 SVE O&M

City of Rocklin

Attention: Mr. Richard Lawrence

Phases / Tasks		Project Total		Task 1 Monitoring, Site Visits, and Reporting		Task 2 On-Call and Repair Services	
		178 hrs	$ 26,254.80				
--Total Materials & Equipment			$ 825.00		$ 825.00		$ -
Other Direct Costs			Total Est. Cost		Cost		Cost
LEL Sensor			$ 600.00		$ 600.00		$ -
GEM 2000 Rent			$ 800.00		$ 800.00		$ -
Subtotal Other Direct Costs			$ 1,400.00		$ 1,400.00		$ -
		Markup	$140.00	10.00%	$140.00		
--Total Other Direct Costs			$ 1,540.00		$ 1,540.00		$ -
Project/Task --Total			$ 26,254.80		$ 23,063.70		$ 3,191.10
PROJECT Total			$ 26,254.80				

December 14, 2023 – December 14, 2024

Project Cost Summary

7-Dec-23

City of Rocklin - 2024 SVE O&M

City of Rocklin

Attention: Mr. Richard Lawrence

Phases / Tasks		Project Total		Task 1 Monitoring, Site Visits, and Reporting		Task 2 On-Call and Repair Services	
		178 hrs	$ 26,881.80				
Tetra Tech Labor	Hrly Rate	Tot Est. Hrs	Total Est. Cost	Hours	Cost	Hours	Cost
Project Manager - Keith D Hoofard	$185.00	36.0	$ 6,660.00	32.0	$ 5,920.00	4.0	$ 740.00
Staff Scientist/Engineer - M Chiang/H Santsche	$118.00	140.0	$ 16,520.00	120.0	$ 14,160.00	20.0	$ 2,360.00
Project Control - Breanne M Reitler	$90.00	2.0	$ 180.00	2.0	$ 180.00	-	$ -
Subtotal Tetra Tech Labor		178.0 hrs	$ 23,360.00	154.0	$ 20,260.00	24.0	$ 3,100.00
		Markup	$1,051.20	4.50%	$911.70		$139.50
--Total Tetra Tech Labor			$ 24,411.20		$ 21,171.70		$ 3,239.50
Travel			Total Est. Cost		Cost		Cost
Mileage			$ 96.00		$ 64.00		$ 32.00
Subtotal Travel			$ 96.00		$ 64.00		$ 32.00
		Markup	$ 9.60	10.00%	$ 6.40		$ 3.20
--Total Travel			$ 105.60		$ 70.40		$ 35.20
Materials & Equipment			Total Est. Cost		Cost		Cost
Drive Belts			$ 120.00		$ 120.00		$ -
Lube			$ 180.00		$ 180.00		$ -
Synthetic Oil			$ 240.00		$ 240.00		$ -
Simple Green/Rags			$ 60.00		$ 60.00		$ -
Calibration Gas			$ 150.00		$ 150.00		$ -
Subtotal Materials & Equipment			$ 750.00		$ 750.00		$ -
		Markup	$75.00	10.00%	$75.00		
--Total Materials & Equipment			$ 825.00		$ 825.00		$ -
Other Direct Costs			Total Est. Cost		Cost		Cost
LEL Sensor			$ 600.00		$ 600.00		$ -
GEM 2000 Rent			$ 800.00		$ 800.00		$ -
Subtotal Other Direct Costs			$ 1,400.00		$ 1,400.00		$ -
		Markup	$140.00	10.00%	$140.00		
--Total Other Direct Costs			$ 1,540.00		$ 1,540.00		$ -
Project/Task --Total			$ 26,881.80		$ 23,607.10		$ 3,274.70
PROJECT Total			$ 26,881.80				

CONTRACT FOR SERVICES

THIS CONTRACT is made on Dec. 14, 2021, by and between the CITY OF ROCKLIN a municipal corporation ("City"), and

Tetra Tech, Inc.
3101 Zinfandel Drive, Ste. 200
Rancho Cordova, CA 95670
(916) 853-1800/tetratech.com

"Contractor" who mutually agree as follows:

1. SCOPE OF SERVICES

Subject to the terms and conditions set forth in this agreement, Contractor shall provide to the City the services described in the Scope of Work, Exhibit A. Contractor shall provide the services at the time, place and in the manner specified in Exhibits A and/or B. Contractor shall not be compensated for services outside the scope of Exhibit A unless prior to the commencement of the services: (a) Contractor notifies the City and City agrees the services are outside the scope of Exhibit A; (b) Contractor estimates the additional compensation required for these additional services; and (c) City after notice, approves in writing a supplemental agreement specifying the additional services and the amount of compensation therefore. City shall have no obligation whatsoever under this agreement or any supplemental agreement, unless and until the agreement or supplemental agreement is approved by the City Manager, the City Manager's authorized designee, or by the Rocklin City Council, as required by the Rocklin Municipal Code or other local law or policy.

2. COMPENSATION

A. The City shall pay Contractor for the services rendered pursuant to this agreement at the times and in the manner set forth in the Scope of Services, Exhibit A, the Schedule for Performance, Exhibit B, and in accordance with the Schedule of Fees in Exhibit C, but in no event shall the total compensation exceed the **total sum of Twenty-Three Thousand, Four Hundred and Eighty Dollars and Twenty-Seven Cents ($23,480.27).** The payments specified in Exhibits A and/or B shall be the only payments to be made to Contractor for the services rendered pursuant to this Agreement unless pursuant to Section 1, above, City approves additional compensation for additional services.

B. Contractor shall furnish City with invoices for all expenses as well as for all materials authorized by this Contract. The invoices shall be submitted with the monthly billings. Reimbursable expenses shall be limited to actual expenditures of Contractor for expenses that are necessary for the proper completion of the services and shall only be payable if specifically authorized in advance by City.

C. Contractor shall submit all billings/invoices for services to City in the manner specified in Exhibit B. Contractor's fees shall be as specified in the Scope of Work, Exhibit A or the Schedule of Fees as set forth in Exhibit C. All invoices submitted by Contractor shall contain the following information:

(1) Job/project name or description;

(1) Job/project name or description;
(2) City's current purchase order and/or work order number (if applicable);
(3) Contractor's invoice number;
(4) Date of invoice issuance;
(5) Description of services billed under invoice, including the description of tasks performed and the corresponding rate charged for the completion of that task;
(6) Amount of invoice, itemizing all authorized reimbursable expenses; and
(7) Total billed to date under agreement.

D. City shall make payment to Contractor net 30 days from receipt of an acceptable invoice. If Contractor's performance is not in conformity with the Scope of Work, Exhibit A, or the Schedule of Performance, Exhibit B, or the provisions set forth above, payments may be delayed or denied, unless the Contractor's failure to perform is a documented result of the City's failure to conform with the Schedule of Performance, or if the Schedule of Performance is extended pursuant to Section 4. City shall not be responsible for delays in payment to Contractor resulting from Contractor's failure to comply with the invoice format described above, or as set forth in the Schedule of Performance.

E. During performance of the agreement and for a period of three (3) years after completing all services, Contractor shall maintain all accounting and financial records related to this Agreement, including but not limited to records of Contractor's costs for all services performed under this agreement and records of Contractor's reimbursable expenses, in accordance with generally accepted accounting practices, and shall keep and make the records available for inspection and audit by representatives of the City upon reasonable written notice.

F. Contractor shall pay when and as due, any and all taxes incurred as a result of Contractor's compensation hereunder, including estimated taxes, and shall provide City with proof of payment upon request. Contractor hereby agrees to indemnify City for any claims, losses, costs, fees, liabilities, damages or injuries suffered by City arising out of Contractor's breach of this section.

3. FACILITIES AND EQUIPMENT

Contractor shall at its sole cost and expense, furnish all facilities and equipment that may be required for Contractor to perform services pursuant to this agreement. City shall furnish to Contractor, only the facilities and equipment listed in Exhibit A (if any) according to any terms and conditions set forth in Exhibit A.

4. TERM OF CONTRACT

A. This agreement shall become effective on the date that it is approved by both parties, set forth on the first page of the agreement and shall continue in effect until both parties have fully performed their respective obligations under this agreement unless sooner terminated as provided herein.

B. The services of Contractor are to commence upon receipt of written notice to proceed from the City, and shall be undertaken and completed in accordance with the Schedule of Performance attached hereto and incorporated herein by this reference as **Exhibit B.**

C. The City Manager or his or her designee may, by written instrument signed by the Parties, extend the duration of this Contract for a period equal to the original term of this Contract in the manner provided in Section 7.

5. SUSPENSION/TERMINATION:

A. City shall have the right at any time to temporarily suspend Contractor's performance hereunder, in whole or in part, by giving written notice of suspension to Contractor. If City gives such notice, Contractor shall immediately suspend its activities under this agreement.

B. This Contract may be terminated by either party, provided that the other party is given not less than **60** calendar days' written notice (delivered by certified mail, return receipt requested) of intent to terminate. If the agreement is terminated by the City:

i. Contractor shall immediately cease rendering services pursuant to this agreement;
ii. Contractor shall, not later than five days after such notice of termination, deliver to City copies of all information prepared pursuant to this agreement;
iii. City shall pay Contractor the reasonable value of services rendered by Contractor prior to termination; provided however, City shall not in any manner be liable for lost profits that might have been made by Contractor had the agreement not been terminated or had Contractor completed the services required by this agreement. Contractor shall furnish to City such financial information as in the judgment of the City is necessary for City to determine the reasonable value of the services rendered by Contractor. The foregoing is cumulative and does not affect any right or remedy that city may have in law or equity.

C. Notwithstanding any provisions of this Contract, Contractor shall not be relieved of liability to the City for damages sustained by the City by virtue of any breach of this Contract by Contractor, and the City may withhold any payments due to Contractor until such time as the exact amount of damages, if any, due the City from Contractor is determined.

6. INDEPENDENT CONTRACTOR

Contractor enters into this Contract as an independent contractor and not as an employee or agent of the City. Contractor shall have no power or authority by this Contract to act on behalf of City in any capacity whatsoever as an agent, or to bind the City in any respect or to any obligations whatsoever. Nothing in this Contract shall be construed to be inconsistent with this relationship or status. All employees, agents, contractors or subcontractors hired or retained by the Contractor are employees, agents, contractors or subcontractors of the Contractor and not of the City. The City shall not be obligated in any way to pay any wage claims or other claims made against Contractor by any such employees, agents, contractors or subcontractors, or any other person resulting from performance of this agreement.

7. AMENDMENTS, CHANGES OR MODIFICATIONS

Amendments, changes or modifications in the terms of this Contract may be made at any time by mutual written agreement between the parties hereto and shall be signed by the persons authorized to bind the parties hereto.

8. EXTENSIONS OF TIME

Contractor may, for good cause, request extensions of time to perform the services required hereunder. Such extensions shall be authorized in advance by the City in writing and shall be incorporated in written amendments to this Contract or the attached Work Program in the manner provided in Section 7.

9. PROPERTY OF CITY

It is mutually agreed that all materials prepared by the Contractor under this Contract shall become the property of the City, and the Contractor shall have no property right therein whatsoever. Immediately upon termination, the City shall be entitled to, and the Contractor shall deliver to the City, all data, drawings, specifications, reports, estimates, summaries and other such materials as may have been prepared or accumulated to date by the Contractor in performing this Contract which is not Contractor's privileged information, as defined by law, or Contractor's personnel information, along with all other property belonging exclusively to the City which is in the Contractor's possession.

10. COMPLIANCE WITH ALL LAWS:

Contractor shall keep itself fully informed of, shall observe and comply with, and shall cause any and all persons, firms or corporations employed by it or under its control to observe and comply with, all applicable laws, ordinances, and codes of federal, State and local governments, which in any manner affect those engaged or employed on the work described by this Contract or the materials used or which in any way affect the conduct of the work, and shall commit no trespass on any public or private property in performing any of the work authorized by this Contract.

For all leases and purchases of materials, equipment, supplies or other tangible personal property used to perform the agreement and shipped from outside California, the Contractor and any subcontractors leasing or purchasing such materials, equipment, supplies or other tangible personal property shall obtain a Use Tax Direct Payment Permit or Seller's Permit from the California State Board of Equalization, in accordance with the applicable SBE criteria and requirements. This provision applies in all instances unless prohibited by the funding source for the agreement.

FOR WORK SUBJECT TO PREVAILING WAGES [C. The work contemplated under this Contract is a public work for the purposes of Labor Code section 1720, and is subject to the payment of prevailing wages. Accordingly, Contractor shall comply with the provisions of Exhibit **"E"**.

11. WARRANTIES AND RESPONSIBILITIES - CONTRACTOR

A. Contractor agrees and represents that it is qualified to properly provide the services set forth in **Exhibit "A"** in a manner which is consistent with the generally accepted standards of Contractor's profession.

B. Contractor is duly licensed, qualified and experienced to perform the services set forth in the Scope of Services, Exhibit A. Contractor represents and warrants that Contractor has all licenses, permits, qualifications and approvals of whatsoever nature that are legally required for Contractor to practice its profession or provide any services under this agreement. Contractor

represents and warrants that Contractor shall, at its sole cost and expense, keep in effect or obtain at all times during the term of this agreement, any licenses, permits and approvals that are legally required for Contractor to practice its profession or provide such services. If Contractor is an out of state corporation, Contractor further warrants and represents that it possesses a valid certification of qualification to transact business in the State of California issued by the California Secretary of State.

C. Contractor shall perform all services required pursuant to this agreement in the manner and according to the standards currently observed by a competent practitioner of Contractor's profession in California. Contractor shall devote such time and effort to the performance of services pursuant to this agreement as is necessary for the satisfactory and timely performance of Contractor's obligations under this agreement. Neither party shall be considered in default of this agreement to the extent that party's performance is prevented or delayed by any cause that is beyond the reasonable control of that party.

D. All products of whatsoever nature that Contractor delivers to City pursuant to this Agreement shall be prepared in a professional manner and conform to the standards of quality normally observed by a person currently practicing in Contractor's profession, and shall be provided in accordance with any scope of services or schedule of performance specified in Exhibits A or B.

E. Contractor shall assign only competent personnel to perform services pursuant to this agreement. Contractor shall designate a project manager who at all times shall represent the Contractor before the City on all matters relating to this Contract. The project manager shall continue in such capacity unless and until he or she is removed at the request of the City, is no longer employed by Contractor, or is replaced with the written approval of the City, which approval shall not be unreasonably withheld. Contractor shall notify City in writing, of any other changes in Contractor's staff assigned to perform the services required under this agreement, prior to any such performance. In the event the City desires the removal of any person assigned by Contractor to perform services pursuant to this agreement, because the City in its sole discretion, determines that such person is not performing in accordance with the standards required herein, Contractor shall remove such person immediately upon receiving notice from the City of the desire for the removal of such person.

F. Contractor agrees and represents that the work performed under this Contract shall be in accordance with applicable federal, State and local law.

G. Contractor shall provide corrective services without charge to the City for services which fail to meet the above professional and legal standards and which are reported to Contractor in writing within sixty (60) days of discovery. Should Contractor fail or refuse to perform promptly its obligations, the City may render or undertake performance thereof and the Contractor agrees it has satisfied itself by its own investigation and research regarding the conditions affecting the work to be done and labor and materials needed, and that its decision to execute this agreement is based on such independent investigation and research. Contractor shall be liable for any expenses thereby incurred.

12. SUBCONTRACTING

None of the services covered by this Contract shall be subcontracted without the prior written consent of the City, which will not be unreasonably withheld. Contractor shall be as fully responsible to the City for the negligent acts and omissions of its contractors and subcontractors,

and of persons either directly or indirectly employed by them, as it is for the negligent acts and omissions of persons directly employed by Contractor.

13. ASSIGNABILITY

Contractor shall not assign or transfer any interest in this Contract whether by assignment or novation, without the prior written consent of the City. The City has a strong interest in the qualifications and capability of the persons and entities that will fulfill the obligations imposed on Contractor under this agreement. However, claims for money due or to become due Contractor from the City under this Contract may be assigned to a financial institution, or to a trustee in bankruptcy, without such approval. Notice of any assignment or transfer whether voluntary or involuntary shall be furnished promptly to the City.

14. INTEREST IN CONTRACT

Contractor covenants that neither it, nor any of its employees, agents, contractors, or subcontractors has any interest, nor shall they acquire any interest, direct or indirect, in the subject of the Contract, nor any other interest which would conflict in any manner or degree with the performance of its services hereunder. Contractor shall make all disclosures required by the City's conflict of interest code in accordance with the category designated by the City, unless the City Manager determines in writing that Contractor's duties are more limited in scope than is warranted by the category designated by the City code and that a narrower disclosure category should apply. Contractor also agrees to make disclosure in compliance with the City conflict of interest code if, at any time after the execution of this Contract, City determines and notifies Contractor in writing that Contractor's duties under this Contract warrant greater disclosure by Contractor than was originally contemplated. Contractor shall make disclosures in the time, place and manner set forth in the conflict of interest code and as directed by the City.

15. MATERIALS CONFIDENTIAL

To the extent permitted by law, all of the materials prepared or assembled by Contractor pursuant to performance of this Contract are confidential and Contractor agrees that they shall not be made available to any individual or organization without the prior written approval of the City, except by court order.

16. LIABILITY OF CONTRACTOR-NEGLIGENCE

Contractor shall be responsible for performing the work under this Contract in a manner which is consistent with the generally-accepted standards of the Contractor's profession and shall be liable for its own negligence and the negligent acts of its employees, agents, contractors and subcontractors. The City shall have no right of control over the manner in which the work is to be done but only as to its outcome, and shall not be charged with the responsibility of preventing risk to Contractor or its employees, agents, contractors or subcontractors.

17. INDEMNITY AND LITIGATION COSTS

Contractor shall indemnify, defend, and hold harmless the City, its officers, officials, agents, and employees against all claims, damages, demands, liability, costs, losses and expenses, including without limitation court costs and reasonable attorneys' fees, arising from Contractor's negligent acts or negligent failure to act, errors, omissions or willful misconduct incident to the performance of this Contract except such loss or damage caused by the active

negligence, sole negligence, or willful misconduct of the City. The provisions of this paragraph shall survive termination or suspension of this Contract.

Contractor shall protect, hold free and harmless, defend and indemnify the Agency, its Contractors, and each of their officers, employees and agents, from any and all liability, penalties, costs, losses, damages, expenses, causes of action, claims or judgments, including attorney's fees and expenses of litigation arising out of, pertaining to, or relating to the negligence, recklessness, or willful misconduct of the Contractor, its employees or anyone else employed by the Contractor in the performance of professional design services under this agreement, to the extent of the Contractor's proportionate percentage of fault.

To the extent permitted by Civil Code section 2782.8, for all other claims unrelated to the provision of professional design services, the Contractor shall protect, hold free and harmless, defend and indemnify the Agency, its Contractors, and each of their officers, employees and agents, from any and all liability, penalties, costs, losses, damages, expenses, causes of action, claims or judgments, including attorney's fees and expenses of litigation, which arise out of or are in any way connected with the Contractor's, or its subcontractors' or suppliers', performance under this agreement or failure to comply with any of the obligations contained in the agreement. This indemnity shall imply no reciprocal right of the Contractor in any action on the agreement pursuant to California Civil Code section 1717 or section 1717.5. To the fullest extent legally permissible, this indemnity, defense and hold harmless agreement by the Contractor shall apply to any and all acts or omissions unrelated to the provision of professional design services, whether active or passive, on the part of the Contractor or its agents, employees, representatives, or subcontractor's agents, employees and representatives, resulting in claim or liability, irrespective of whether or not any acts or omissions of the parties to be indemnified hereunder may also have been a contributing factor to the liability, except such loss or damage which was caused by the active negligence, the sole negligence, or the willful misconduct of the Agency.

18. CONTRACTOR TO PROVIDE INSURANCE

Contractor shall procure and maintain for the duration of the contract insurance against claims for injuries to persons or damages to property which may arise from or in connection with the performance of the work hereunder by the Contractor, its agents, representatives, or employees.

A. MINIMUM SCOPE AND LIMIT OF INSURANCE

1. **Commercial General Liability (CGL):** Insurance Services Office Form CG 00 01 covering CGL on an "occurrence" basis, including products and completed operations, property damage, bodily injury and personal & advertising injury with limits no less than **$2,000,000** per occurrence. If a general aggregate limit applies, either the general aggregate limit shall apply separately to this project/location (ISO CG 25 03 or 25 04) or the general aggregate limit shall be twice the required occurrence limit.

2. ***Automobile Liability:*** Insurance Services Office Form Number CA 0001 covering, Code 1 (any auto), or if Contractor has no owned autos, Code 8 (hired) and 9 (non-owned), with limit no less than **$1,000,000** per accident for bodily injury and property damage.

3. ***Workers' Compensation*** insurance as required by the State of California, with Statutory Limits, and Employer's Liability Insurance with limit of no less than **$1,000,000** per accident for bodily injury or disease.

4. ***Professional Liability*** (Errors and Omissions) Insurance appropriate to the Contractor's profession, with limit no less than **$2,000,000** per occurrence or claim, $2,000,000 aggregate.

B. Other Insurance Provisions

The insurance policies are to contain, or be endorsed to contain, the following provisions:

1. ***Additional Insured Status.*** The City, its officers, officials, employees, and volunteers are to be covered as additional insureds on the CGL policy with respect to liability arising out of work or operations performed by or on behalf of the Contractor including materials, parts, or equipment furnished in connection with such work or operations. General liability coverage can be provided in the form of an endorsement to the Contractor's insurance (at least as broad as ISO Form CG 20 10 11 85 or both CG 20 10, CG 20 26, CG 20 33, or CG 20 38; and CG 20 37 forms if later revisions used).

2. ***Primary Coverage.*** For any claims related to this contract, the Contractor's insurance coverage shall be primary with coverage at least as broad as ISO CG 20 01 04 13 as respects the City, its officers, officials, employees, or volunteers, and shall be in excess of the Contractor's insurance and shall not contribute to it.

3. ***Notice of Cancellation.*** Each insurance policy required above shall state that coverage shall not be canceled, except with notice to the City.

4. ***Waiver of Subrogation.*** Contractor hereby grants to City a waiver of any right to subrogation which any insurer of said Contractor may acquire against the City by virtue of the payment of any loss under such insurance. Contractor agrees to obtain any endorsement that may be necessary to affect this waiver of subrogation, but this provision applies regardless of whether or not the City has received a waiver of subrogation endorsement from the insurer.

5. ***Self-Insured Retentions.*** Self-insured retentions must be declared to and approved by the City. The City may require the Contractor to provide proof of ability to pay losses and related investigations, claim administration, and defense expenses within the retention. The policy language shall provide, or be endorsed to provide, that the self-insured retention may be satisfied by either the named insured or City.

6. ***Acceptability of Insurers.*** Insurance is to be placed with insurers authorized to conduct business in the state with a current A.M. Best's rating of no less than A:VII, unless otherwise acceptable to the City.

7. ***Claims Made Policies.*** If any of the required policies provide coverage on a claims made basis:

   i. The Retroactive Date must be shown and must be before the date of the contract or the beginning of contract work.

   ii. Insurance must be maintained and evidence of insurance must be provided for at least five (5) years after completion of the contract of work.

iii. If coverage is canceled or non-renewed, and not replaced with another claims-made policy form with a Retroactive Date prior to the contract effective date, the Contractor must purchase "extended reporting" coverage for a minimum of five (5) years after completion of contract work.

8. ***Verification of Coverage.*** Contractor shall furnish the City with original Certificate of Insurance including all required amendatory endorsements (or copies of the applicable policy language effecting coverage required by this clause) and a copy of the Declarations and Endorsement Page of the CGL policy listing all policy endorsements to the City before work begins. However, failure to obtain the required documents prior to the work beginning shall not waive the Contractor's obligation to provide them. The City reserves the right to require complete, certified copies of all required insurance policies, including endorsements required by these specifications, at any time.

9. ***Subcontractors.*** Contractor shall require and verify that all subcontractors maintain insurance meeting all the requirements stated herein, and Contractor shall ensure that City is an additional insured on insurance required from subcontractors.

10. ***Special Risks or Circumstances.*** City reserves the right to modify these requirements, including limits, based on the nature of the risk, prior experience, insurer, coverage, or other special circumstances.

19. LIMITATION OF LIABILITY

Regardless of any other terms herein to the contrary, the total liability in the aggregate, of Contractor and Contractor's officers, directors, employees, agents, and independent professional associates, and any of them, to City and any one claiming by, through or under City, for any and all injuries, claims, losses, expenses, or damages whatsoever arising out of or in any way related to Contractor's services, the project or this Agreement, from any cause or causes whatsoever, including but not limited to, the negligence, errors, omissions, strict liability, breach of contract, misrepresentation, or breach of warranty of Contractor's officers, directors, employees, agents or independent professional associates, or any of them, shall not exceed the total compensation received by Contractor under this Agreement, or three hundred thousand dollars ($300,000.00), whichever is greater.

20. GENERAL/MISCELLANEOUS PROVISIONS:

A. **Contract Documents.** This agreement and its exhibits shall be known as the "Contract Documents." Terms set forth in any Contract Document shall be deemed to be incorporated in all Contract Documents as if set forth in full therein. In the event of conflict between terms contained in these Contract Documents, the more specific term shall control. If any portion of the Contract Documents shall be in conflict with any other portion, provisions contained in the Contract shall govern over conflicting provisions contained in the exhibits to the Contract. In the event of any conflict between the terms or conditions of this written agreement and any terms or conditions of any document prepared or provided by Contractor and made a part of this agreement, including without limitation any document relating to the scope of services

or payment therefor, the written terms of this document shall control over those terms or conditions.

B. **Non-Discrimination in Employment and Equal Employment Opportunity**. Contractor shall not engage in unlawful employment discrimination. Such unlawful employment discrimination includes, but is not limited to, employment discrimination based upon a person's race, color, ancestry, national origin, religious creed, sex (including pregnancy, childbirth breastfeeding or related medical condition), sexual orientation, gender, gender identity, gender expression, age (over 40), disability (mental and physical), medical condition, marital status, citizenship, and military and veteran status.

C. **Inspection of Records**. Contractor shall maintain and make available for inspection by the City and its auditors accurate records of all of its costs, disbursements and receipts with respect to any work under this Contract. Such inspections may be made during regular office hours at any time until six (6) months after the final payments under this Contract are made to the Contractor.

D. **Entire Agreement**. This Contract constitutes the entire agreement between the parties relative to the services specified herein and supersedes whatever oral or written understanding they may have had prior to the execution of this agreement. No alteration or modification of this agreement shall be valid or effective unless and until such modification is evidenced by a writing signed by both parties to this Contract, by persons authorized to act on behalf of the parties. There are no understandings, agreements, conditions, representations, warranties or promises, with respect to this Contract, except those contained in or referred to in the writing.

E. **Severability**. If any portion of this agreement or the application thereof to any person or circumstance shall be held invalid or unenforceable, the remainder of this agreement shall not be affected thereby and shall be enforced to the greatest extent permitted by law.

F. **Waiver**. Neither City's acceptance of, or payment for, any service performed by Contractor, nor any waiver by either party of any default, breach, or condition precedent, shall be construed as a waiver of any provision of this agreement, nor as a waiver of any other default, breach or condition precedent or any other right hereunder.

G. **Notice**. All notices that are required to be given by one party to the other under this Contract shall be in writing and shall be deemed to have been given if delivered personally or enclosed in a properly addressed envelope and deposited in a United States Post Office for delivery by registered or certified mail addressed to the parties at the following addresses:

City: City of Rocklin
4081 Alvis Court
Rocklin, CA 95677

Copy to: City Attorney
City of Rocklin
3970 Rocklin Road
Rocklin, CA 95677
Email: LegalNotices@rocklin.ca.us

Contractor: Tetra Tech, Inc.
3101 Zinfandel Drive, Ste. 200
Rancho Cordova, CA 95670

H. **Enforcement of Agreement.** This Contract shall be interpreted, governed and enforced in accordance with the laws of the State of California. Venue of any action arising out of this Contract shall be brought and maintained in Placer County California, regardless of where else venue may lie. The parties consent to jurisdiction over their persons and over the subject matter of any such litigation in such court, and consent to service of process issued by such courts.

I. **Attorney's Fees**. In any action brought by either party to enforce the terms of this Contract, each party shall bear responsibility for its attorney's fees and all costs regardless of whether one party is determined to be the prevailing party.

J. **Power and Authority to Enter into Agreement**. All parties to this Agreement warrant and represent that they have the power and authority to enter into this Agreement in the names, titles, and capacities herein stated and on behalf of any entities, persons, or firms represented or purported to be represented by such entity(ies), person(s), or firm(s) and that all formal requirements necessary or required by any state and/or federal law in order to enter into this Agreement have been fully complied with. Furthermore, by entering into this Agreement, Contractor hereby warrants that it shall not have breached the terms or conditions of any other contract or Agreement to which Contractor is obligated, which breach would have a material effect hereon.

K. **Exhibits**. All exhibits referred to herein and attached hereto, are by this reference incorporated as if set forth fully herein.

CITY OF ROCKLIN

By: _____
Aly Zimmermann, City Manager

ATTEST:

By: _____
Hope Ithurburn, City Clerk

APPROVED AS TO FORM:

By: _____
Sheri Chapman, City Attorney

TETRA TECH, INC, CONTRACTOR

By: _____

Print Name: JASON THACKER

Title: FINANCE CONTROLLER

By: [signature]

Print Name: Roy Marroquin

Title: West Coast Regional Manager

EXHIBIT A

Contractor Proposal/Scope of Work

The Scope of Work is as follows:

SCOPE OF WORK

In accordance with the requirements in the Placer County Department of Health & Human Services Notice and Order 98-02 (the Order), and the associated Updated Workplan for Installation of Gas Extraction System, Former City of Rocklin Landfill, 4420 Rocklin Road, Rocklin, California (Workplan), City of Rocklin is required to perform operations, maintenance, and reporting for the Landfill gas extraction system at the former City of landfill located at 4420 Rocklin Road, Rocklin, California (the Site).

Currently, the Order and Workplan require quarterly soil gas monitoring and reporting as follows:

- The soil gas monitoring locations required include the following (Figure 1):
- The seven (7) soil gas monitoring probes on the site (GMW1-S/GMW1-D, GMW2-S/GMW2-D, GMW3-S/GMW3-D and LEW-1). GMW1 and LEW-1 also function as extraction wells;
- The port adjacent to the swimming pool (SPS);
- The three ports in the hotel lobby floor (HLL, HLD, HL T);
- Ambient air in the storage shed (SHED);
- Ambient air in the hotel lobby (HLA), north wing (HNW) and south wing (HSW);
- The Hotel Continuous Monitor (HCM); and
- Continuous monitoring at soil gas monitoring well GMW4-S (compliance point installed on April 24, 2008).

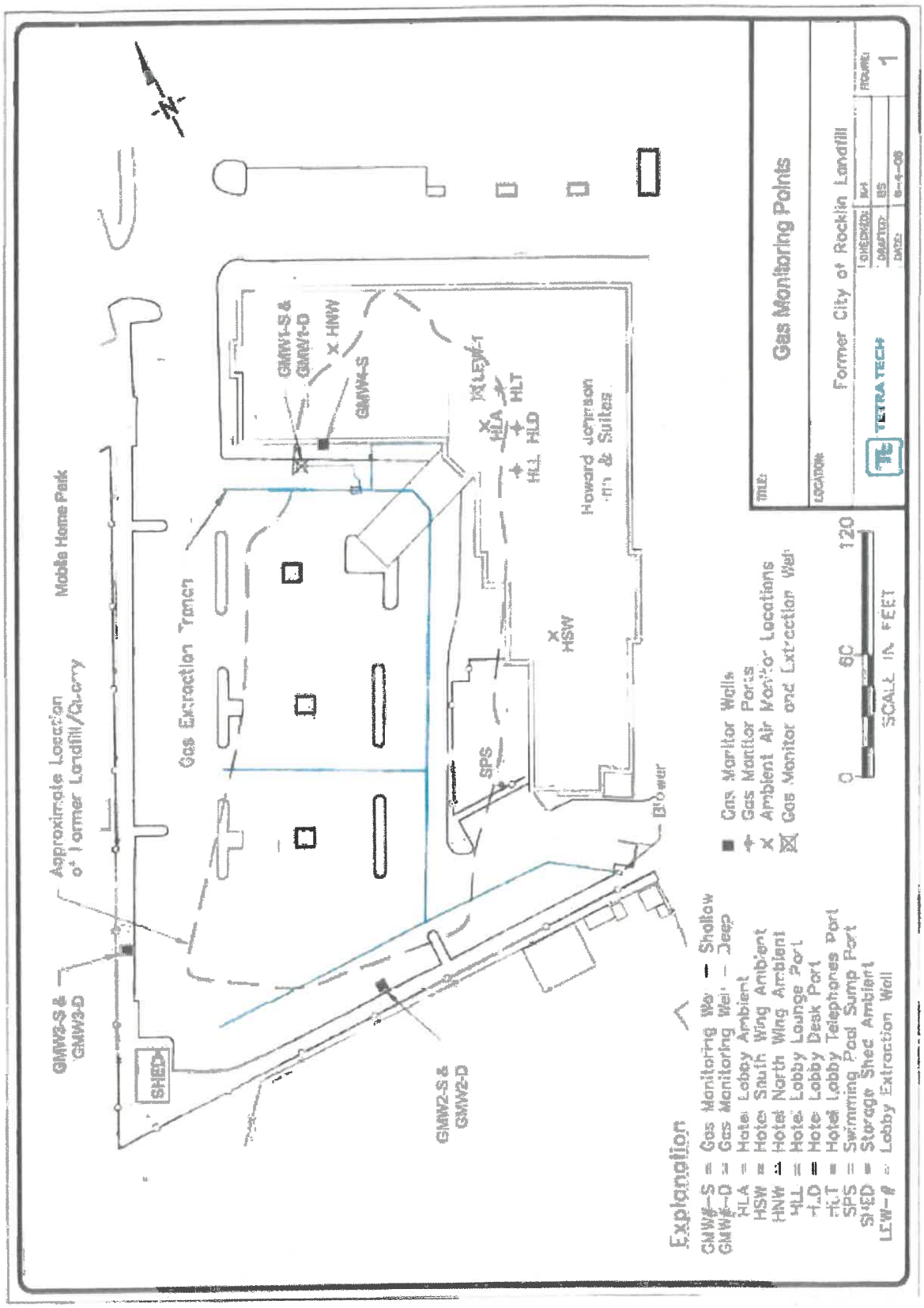
Gas Monitoring Points
Former City of Rocklin Landfill
TETRA TECH
Approximate Location of Former Landfill/Quarry
Mobile Home Park
Gas Extraction Trench
GMW3-S & GMW3-D
SHED
GMW2-S & GMW2-D
GMW1-S & GMW1-D
HNW
GMW4-S
LEW-1
HLA
HLT
HLL
HLD
Howard Johnson Inn & Suites
HSW
SPS
Blower
Explanation
GMW#-S = Gas Monitoring Well - Shallow
GMW#-D = Gas Monitoring Well - Deep
HLA = Hotel Lobby Ambient
HSW = Hotel South Wing Ambient
HNW = Hotel North Wing Ambient
HLL = Hotel Lobby Lounge Port
HLD = Hotel Lobby Desk Port
HLT = Hotel Lobby Telephones Port
SPS = Swimming Pool Sump Port
SHED = Storage Shed Ambient
LEW-# = Lobby Extraction Well
Gas Monitor Wells
Gas Monitor Ports
Ambient Air Monitor Locations
Gas Monitor and Extraction Well
0
60
120
SCALE IN FEET

The monitoring at the above locations follows established protocols and the monitoring results are reported to the Placer County Environmental Health Services quarterly.

To support smooth operations of the methane gas extraction system Tetra Tech proposes the following services for system maintenance:

- Monthly Site visit for maintenance of the blower and water knockout system, including but not limited to lubrication, oil changes, and drive belt tensioning. As part of normal operational wear, the motor and blower require rebuilding or replacement roughly every 5 years (handled under a separate authorization when needed). Minimal water was generated in recent years, after the blower flow rate was reduced from 425 cubic foot per minute (CFM) to approximately 225 CFM in April 2009.
- On-call services for responding to emergency and unforeseen situations such as false alarms, power surges, and emergency conditions. On-call services typically involve minor system work such as restarting the system, follow-up visits to resample monitoring points with high readings, or minor repair work. If significant repairs or other responses are needed, Tetra Tech will provide a change order proposal to the City of Rocklin for consideration. Related work will only be performed after city's approval.

The scope of work described will be performed under two tasks:

- Task 1: Monitoring, Site Visits, and Reporting. This task includes performing the required quarterly monitoring and reporting, as well as routine (monthly) site visits for system maintenance for the blower and water knockout system, including but not limited to lubrication, oil changes, and drive belt tensioning. Significant maintenance requirements, if any, will be provided under Task 2 On-Call Services. This task also includes calibration and routine replacement of methane monitoring sensors. For cost estimate purpose, the fee proposal includes calibrating and replacing 4 HCM sensors in calendar year 2022.

- Task 2: On-Call and Repair Services. Tetra Tech staff will visit the Site to respond to unplanned/unforeseen system conditions, such as false alarms, power surges, and emergency conditions. On-call services typically involve minor system work such as restarting the system, follow-up visits to resample monitoring points with high readings, or minor repair work. If significant repairs or other responses are needed, Tetra Tech will provide a change order proposal to the City of Rocklin for consideration. Related work will only be performed after city's approval. For cost estimate purpose, the fee proposal includes up to 24 hours of services related to on-call work in calendar year 2022, as per the RFP requirement.

EXHIBIT B

Schedule of Performance

The services of the Contractor are to commence upon receipt of written notice to proceed from the City . This is an annual contract awarded for an initial one year period and will be renewable on a year-to-year basis for two additional one-year terms at the City's option pursuant to the Contract Documents.

EXHIBIT C

Schedule of Fees

The fees for services listed in Exhibit A shall not exceed Twenty-Three Thousand, Four Hundred and Eighty Dollars and Twenty-Seven Cents ($23,480.27) .

Page 1 of 1

Project Cost Summary 26-Oct-21

City of Rocklin - 2022 SVE O&M
City of Rocklin
Attention: Mr. Richard Lawrence

Phases / Tasks		Project Total		Task 1 Monitoring, Site Visits, and Reporting		Task 2 On-Call and Repair Services	
		178 hrs	$ 23,480.27				
Tetra Tech Labor	Hrly Rate	Tot Est. Hrs	Total Est. Cost	Hours	Cost	Hours	Cost
Project Manager	$172.00	36.0	$ 6,192.00	32.0	$ 5,504.00	4.0	$ 688.00
Staff Scientist/Engineer	$98.00	140.0	$ 13,720.00	120.0	$ 11,760.00	20.0	$ 1,960.00
Project Control	$87.00	2.0	$ 174.00	2.0	$ 174.00	-	$ -
Subtotal Tetra Tech Labor		178.0 hrs	$ 20,086.00	154.0	$ 17,438.00	24.0	$ 2,648.00
		Markup	$903.87	4.50%	$784.71		$119.16
--Total Tetra Tech Labor			$ 20,989.87		$ 18,222.71		$ 2,767.16
Travel			Total Est. Cost		Cost		Cost
Mileage			$ 84.00		$ 56.00		$ 28.00
Phone			$ 90.00		$ 60.00		$ 30.00
Subtotal Travel			$ 174.00		$ 116.00		$ 58.00
		Markup	$ 17.40	10.00%	$ 11.60		$ 5.80
--Total Travel			$ 191.40		$ 127.60		$ 63.80
Materials & Equipment			Total Est. Cost		Cost		Cost
Drive Belts			$ 120.00		$ 120.00		$ -
Lube			$ 180.00		$ 180.00		$ -
Synthetic Oil			$ 240.00		$ 240.00		$ -
Simple Green/Rags			$ 60.00		$ 60.00		$ -
Calibration Gas			$ 150.00		$ 150.00		$ -
Subtotal Materials & Equipment			$ 750.00		$ 750.00		$ -
		Markup	$75.00	10.00%	$75.00		
--Total Materials & Equipment			$ 825.00		$ 825.00		$ -
Other Direct Costs			Total Est. Cost		Cost		Cost
LEL Sensor			$ 600.00		$ 600.00		$ -
GEM 2000 Rent			$ 740.00		$ 740.00		$ -
Subtotal Other Direct Costs			$ 1,340.00		$ 1,340.00		$ -
		Markup	$134.00	10.00%	$134.00		
--Total Other Direct Costs			$ 1,474.00		$ 1,474.00		$ -
Project/Task --Total			$ 23,480.27		$ 20,649.31		$ 2,830.96
PROJECT Total			$ 23,480.27				

EXHIBIT D

CERTIFICATE OF COMPLIANCE WITH LABOR CODE § 3700
[Labor Code § 1861]

I am aware of the provisions of Section 3700 of the Labor Code which require every employer to be insured against liability for workers' compensation or to undertake self-insurance in accordance with the provisions of that code, and I will comply with such provisions before commencing the performance of the work of this contract.

CONTRACTORS

By: _____
[Title]

West Coast Regional Manager

1733390.1 9959-001

EXHIBIT E
LABOR COMPLIANCE

1. PREVAILING WAGE

A. The Work contemplated herein constitutes a public work within the meaning of Labor Code sections 1720 and 1771. It shall be mandatory upon the Contractor and upon any Subcontractor, to pay not less than the said specified prevailing rates of wages to all workers employed by them under the Contract in accordance with Labor Code section 1774. The Director of the Department of Industrial Relations ("DIR") of the State of California has determined the general prevailing rate of wages of per diem wages in the locality in which the work is to be performed for each craft or type of worker needed to execute the Contract. The Contractor acknowledges that it has examined the prevailing rate of per diem wages as established by the DIR. Copies of the current schedules for prevailing wages are on file at City Hall, and the contents of those schedules are incorporated herein as if set forth in full. The Contractor shall post a copy of the applicable prevailing wage determinations at each job site, along with any other work place posters required by law.

B. The City will not recognize any claims for additional compensation because of the payment of prevailing wages. The possibility of wage increases is one of the elements to be considered by the Contractor in determining its proposal, and will not under any circumstances be considered as the basis of a claim against the City.

C. By executing this Contract Contractor warrants that it has registered with the Department of Industrial Relations in accordance with Labor Code section 1725.5.

2. PREVAILING WAGE RECORDS

A. The Contractor and each subcontractor shall keep an accurate payroll record which shows the name, address, social security number, correct work classification (in accordance with the wage decision), both straight and overtime worked each day and week, and hourly rate of pay, gross wages earned, deductions made and net wages paid to each journeyman, apprentice, worker or other employee paid by the Contractor /subcontractor in connection with the Work. These payroll records shall be certified and shall be made available at Contractor's principal office. These records shall be maintained during the course of the Work. The Contractor and all subcontractors shall make the certified payroll records available for inspection by City representatives upon request and shall permit such representatives to interview employees during the work hours on the job site.

B. The City shall notify the Contractor in writing of any discrepancies or violations that are discovered during such inspections. Written notification pursuant to this Section shall include the actions that will be necessary to resolve the discrepancies and/or violations. The Contractor shall be held entirely responsible for the prompt resolution of all non-compliances with the prevailing wage laws, including those pertaining to all subcontractors and any lower-tier subcontractors. The Contractor shall forfeit as penalty to the City the amount specified by law for each calendar day or portion thereof for each worker (whether employed by the Contractor or any subcontractor) paid less than the stipulated prevailing rates for any work done under the Contract in violation of the provisions of the Labor Code and in particular, Section 1775.

C. To the extent applicable, Contractor and subcontractors shall maintain and furnish to the Department of Industrial Relations ("DIR"), a certified copy of each weekly payroll (but no less often than monthly), with a statement of compliance signed under penalty of perjury. Such certified payroll reports shall be transmitted electronically to the DIR.

D. The City will not recognize any claims for additional compensation because of the payment of the prevailing wages. The possibility of wage increases is one of the elements to be considered by the Contractor in entering into the Contract, and will not under any circumstances, other than delays caused by the City, or the City's agents, be considered as the basis of a claim against the City.

3. Labor Discrimination

Attention is directed to Section 1735 of the Labor Code, which reads as follows:

> "No discrimination shall be made in the employment of persons upon public works because of their race, color, national origin or ancestry, physical handicap, mental condition, marital status, or sex of such person, except as provided in Section 12940 of the Government Code, and every General Contractor for public works violating this section is subject to all the penalties imposed for a violation of this chapter."

4 Eight-Hour Day Limitation

(a) In accordance with the provisions of the Labor Code, and in particular, Sections 1810 to 1815 thereof, inclusive, incorporated herein by reference, eight hours labor shall constitute a day's work, and no worker in the employ of Contractor, or any Subcontractor, doing or contracting to do any part of the work contemplated by the Contract, shall be required or permitted to work more than eight (8) hours in any one calendar day and forty (40) hours in any one calendar week in violation of those provisions; provided that subject to Labor Code Section 1815, a worker may perform work in excess of either eight (8) hours per day or forty (40) hours during any one week upon compensation for all hours worked in excess of eight (8) hours per day or forty (40) hours during any one week at not less than one and one-half times the basic rate of pay.

(b) The Contractor and each Subcontractor shall also keep an accurate record showing the names and actual hours worked of all workers employed by them in connection with the Contract. This record shall be open at all reasonable hours to the inspection of the City. It is hereby further agreed that, except as provided in (a) above, the Contractor shall forfeit as a penalty to the City the sum of twenty-five dollars ($25) for each worker employed in the performance of the Contract by the Contractor or by any of its Subcontractors for each calendar day during which such worker is required or permitted to labor more than eight (8) hours in and one calendar day and forty (40) hours in any one calendar week in violation of Sections 1810 through 1815.

5. Compliance with State Requirements for Employment of Apprentices

(a) The Contractor's attention is directed to Section 1777.5 of the Labor Code. Provisions of said Section pertaining to employment of registered apprentices are hereby incorporated by reference into this Contract. As applicable, the Contractor or any Subcontractor employed by the Contractor in the performance of this Contract shall take such actions as necessary to comply with the provisions of Section 1777.5.

ROCKLIN
CALIFORNIA

December 12, 2022

Tetra Tech, Inc.
3101 Zinfandel Dr. Ste. 200
Rancho Cordova, CA 95670

Re: Rocklin Landfill Methane Extraction System Operations,
Maintenance and Monitoring Services

Dear Mr. Hoofard,

On December 14, 2021, the City of Rocklin entered into an Agreement for the Rocklin Landfill Methane Extraction System Operations, Maintenance and Monitoring Services with Tetra Tech, Inc. to provide services within the City of Rocklin. This is an annual contract awarded for an initial one-year period and will be renewable on a year-to-year basis for two additional one-year terms at the City's option pursuant to the Contract Documents.

Please let this letter serve as a notice that the City of Rocklin is renewing the Agreement for the Rocklin Landfill Methane Extraction System Operations, Maintenance and Monitoring Services, starting December 14, 2022

.

If you have any questions, please contact me at (916) 625-5500.

Thank you,

Justin Nartker
Director of Public Services

CITY OF ROCKLIN Public Services Department
4081 Alvis Ct. Rocklin, CA 95677 | **rocklin.ca.us**
P. 916.625.5500 | **F.** 916.625.5501 | **TTY.** 916.632.4013

AMENDMENT NO. 1
TO CONTRACT FOR SERVICES BETWEEN
THE CITY OF ROCKLIN AND TETRA TECH, INC.

THIS AMENDMENT is entered into as of December 14, 2023, by and between the City of Rocklin, a municipal corporation ("City"), and Tetra Tech, Inc., ("Contractor"), who agree as follows:

RECITALS

WHEREAS, the City and Contractor entered into a Contract for Services on December 14, 2021, to provide monitoring, site visits, reports, as well as on-call and repair services for the landfill gas extraction system at the former City of Rocklin landfill located at 4420 Rocklin Road, Rocklin, California (hereafter "Agreement"); and

WHEREAS, the Agreement was for an initial 12-month period, starting on December 14, 2021, and is renewable on a year-to-year basis for two additional one-year terms at the City's option; and

WHEREAS, the Agreement was renewed for one (1) additional year, in writing, extending the term from December 14, 2022 to December 14, 2023; and

WHEREAS, the City and Contractor agree to amend the Agreement to renew the term for one (1) additional year from December 14, 2023 to December 14, 2024.

AGREEMENT

NOW, therefore, the City and Contractor hereby agree to amend the Agreement as follows:

1. Exhibit B of the Agreement entitled "Schedule of Performance" is amended to renew the Agreement to December 14, 2024.

2. The parties agree that this Amendment may be executed and delivered by digital electronic signatures (DocuSign), and that such signatures appearing on this Amendment are the same as handwritten signatures for the purposes of validity, enforceability, and admissibility.

Except as set forth in this Amendment, the Agreement is unaffected and shall continue in full force and effect in accordance with its terms. If there is a conflict between this Amendment and the Agreement, the terms of this Amendment will prevail.

Executed as of the date first written above.

CITY OF ROCKLIN

Docusigned by:

By: Aly Zimmermann

F29E9749AAD8403...

Aly Zimmermann, City Manager

CONTRACTOR

By: Keith Hoofard
Keith Hoofard, Project Manager

By: _____
Betty Li, Operations Manager

APPROVED AS TO FORM:

DocuSigned by:
By: Daniel Cucchi
5553D9734517413...
DanielCucchi, Acting Assistant City Attorney

ATTEST:

DocuSigned by:
By: Avinta Madhukaush-Singh
88A95AD69CB047E...

Avinta Singh, City Clerk

ROCKLIN
CALIFORNIA

City Council Staff Report

Subject: 2025 Striping and Marking Services Bid Award

Date: February 25, 2025

Submitted By: Rick Lawrence, Public Works Manager
Justin Nartker, Public Works Director

Department: Public Works

Recommendation:
Adopt a Resolution of the City Council of the City of Rocklin Awarding the Contract for the 2025 Striping and Marking Maintenance Services to Sierra Traffic Markings, Inc., and Authorizing the City Manager to Execute an Agreement.

Background:
The 2025 Striping and Marking Maintenance Services project was included in the Fiscal Year (FY) 2024/25 Operating Budget approved by the City Council on June 25, 2024. This project consists of providing striping and marking maintenance services within the City rights-of-way, easements, and infrastructure.

The bid for the 2025 Striping and Marking Maintenance Services was advertised on January 17, 2025, and January 24, 2025, with the bid opening on Wednesday, February 5, 2025. One (1) bid was received from Sierra Traffic Markings, Inc. in the amount of $915,051 (see Attachment 3 - Bid Summary).

Staff has reviewed the bid for sufficiency, determined it to be responsive, and determined that Sierra Traffic Markings, Inc. submitted the lowest responsible bid. Staff recommends that the City Council award the contract to Sierra Traffic Markings, Inc. Pursuant to Rocklin Municipal Code, section 3.04.050, the City Manager will have change order authority up to fifteen (15) percent of the contract amount ($137,258, rounded). The total amount for this project, including the fifteen (15) percent change order authority, is $1,052,309 (rounded).

Environmental Analysis:
The City of Rocklin's Environmental Coordinator has reviewed the 2025 Striping and Marking Maintenance Services contract and determined that it falls under the previously approved Notice of Exemption for Striping and Marking Services, Resolution No. 2018-189, and is exempt from review under the California Environmental Quality Act (CEQA) pursuant to California Code of Regulations Section 15301 & 15302.

Fiscal Impact:
There is no direct fiscal impact on the General Fund from staff recommendation. Sufficient funds are available in the Pavement Management Program (Project No. 50007) in the SB1 Road Maintenance and Rehabilitation Fund (205) and the SB 325 Sales Tax Fund (210).

ATTACHMENTS:
1. Resolution and Agreement
2. Bid Documents
3. Bid Summary Sheet

RESOLUTION NO. 2025-

RESOLUTION OF THE CITY COUNCIL OF THE CITY OF ROCKLIN AWARDING THE CONTRACT FOR THE 2025 STRIPING AND MARKING MAINTENANCE SERVICES TO SIERRA TRAFFIC MARKINGS, INC., AND AUTHORIZING THE CITY MANAGER TO EXECUTE AN AGREEMENT

WHEREAS, the 2025 Striping and Marking Maintenance Services consists of providing striping and marking maintenance services within City rights-of-way, easements, and infrastructure; and

WHEREAS, the invitation for bids was advertised on January 17, 2025, and January 24, 2025, with the bid opening on Wednesday, February 5, 2025, and bids were thereafter examined and found to be in compliance with all applicable specifications; and

WHEREAS, the lowest responsible bid was determined to be $915,051, submitted by Sierra Traffic Markings, Inc., and staff recommends that the contract for the project be awarded to Sierra Traffic Markings, Inc.; and

WHEREAS, pursuant to the Rocklin Municipal Code, Section 3.04.050, a contingency amount of fifteen (15) percent of the contract, $137,258 (rounded), is automatically authorized for all public works project contracts awarded by the City Council or the City Manager, as long as adequate funds have been appropriated, bringing the total authorized project amount to $1,052,309 (rounded); and

WHEREAS, this project is funded using Sales Tax (SB325) Funds (210); and

NOW, THEREFORE, the City Council of the City of Rocklin does resolve as follows:

Section 1. The contract for the 2025 Striping and Marking Maintenance Services is awarded to Sierra Traffic Markings, Inc. and the City Manager is authorized to execute the Agreement with Sierra Traffic Markings, Inc. in substantially the form attached hereto as Exhibit “A.”

PASSED AND ADOPTED this 25th day of February, 2025, by the following vote:

AYES: Councilmembers:
NOES: Councilmembers:
ABSENT: Councilmembers:
ABSTAIN: Councilmembers:

_____
Jill Gayaldo, Mayor

ATTEST:

_____
Avinta Singh, City Clerk

CONSTRUCTION AGREEMENT

THIS AGREEMENT, dated for identification as of February 25, 2025, is between the **CITY OF ROCKLIN**, a municipal corporation, (hereinafter called "City"), and **Sierra Traffic Markings, Inc.,** a Corporation (hereinafter called "Contractor").

The parties hereto mutually agree to the terms and condition set forth herein.

I. CONTRACT DOCUMENTS

A. The Contract Documents referred to herein are incorporated herein by reference as if set forth in full in this Agreement.

B. Work called for in any one Contract Document and not mentioned in another is to be performed and executed as if mentioned in all Contract Documents. The table of contents, titles and headings contained herein and in said documents are solely to facilitate reference to various provisions of the Contract Documents and in no way affect or limit the interpretations of the provisions to which they refer.

C. The Contract Documents shall include the Notice to Contractors, Addenda, Bid Form, Agreement, Plans, General Provisions, Special Provisions, General Requirements (Division 1), Technical Specifications (Divisions 2 through 16), Permits from other agencies as may be required by law, City of Rocklin Construction Specifications, Improvement Standards and Standard Drawings, Caltrans Standard Plans and Specifications as applicable, Standard Forms, Supplemental Drawings, all required bonds, Exhibits, the Contract Schedule, Storm Water Pollution Prevention Plan (whether prepared by the City or the Contractor) and any and all supplemental agreements amending or extending the Work contemplated and which may be required to complete the Work in an acceptable manner. Supplemental agreements are written agreements covering alterations, amendments or extensions to the Contract Documents and include Change Orders, Construction Change Directives, Field Directives, Field Orders and Supplemental Drawings.

D. The General Provisions shall mean and refer to the current General Provisions of the City of Rocklin, which are incorporated herein by this reference as if set forth herein.

II. DEFINITIONS

Unless otherwise specifically provided herein, all works and phrases defined in the General Provisions shall have the same meaning and intent in this Agreement.

III. AGREEMENT CONTROLS

In the event of a conflict between the terms and conditions as set forth in this Agreement and the terms and conditions set forth in other Contract Documents, the terms and conditions set forth in this Agreement shall prevail.

IV. SCOPE OF CONTRACT

Contractor agrees to furnish all tools, equipment, apparatus, facilities, labor and material and transportation necessary to perform and complete in a good and workman like manner to the satisfaction of City, all the work required for the Contract for the Project entitled: 2025 Striping and Marking Maintenance Services.

V. CONTRACT AMOUNT AND PAYMENTS

City agrees to pay and Contractor agrees to accept, in full payment for the above work, **Nine Hundred Fifteen Thousand Fifty-One Dollars ($915,051.00)** as the stipulated sum price which Contractor bid in its Bid Form, subject to additions and deductions by Change Order(s) as provided in the General Conditions.

VI. PROGRESS AND FINAL PAYMENTS

Progress and final payments shall be in accordance with the General Provisions.

IIIII. RETENTION OF SUMS CHARGED AGAINST CONTRACTOR

When, under the provisions of this contract, City shall charge any sum of money against Contractor, City shall deduct and retain the amount of such charge from the amount of the next succeeding progress estimate, or from any other moneys due or that may become due to the Contractor from City. If, on completion or termination of the Contract, sums due contractor are insufficient to pay City's charges against him, City shall have the right to recover the balance from Contractor or his sureties.

IVIII. TIME OF COMPLETION

A. The initial contract will be for a term of Three (3) years from the date of award. The City may renew the contract for up to two (2) additional years, one year at a time, at its sole discretion. Sixty days prior to the expiration date of the current contract, the City may re-negotiate out-year pricing (increases and/or decreases) based on market fluctuations.

B. If the term of the contract is extended beyond the initial three-year term, any requests made by the Contractor for a price increase must be fully documented utilizing an appropriate Consumer or Producer Price Index or other relevant market data to justify a price change, not to exceed 4%. In its request for price increases Contractor shall cite sources, specific conditions, and document how those conditions affect the cost.

C. Failure to complete the Work by the completion date and in the manner provided for by the Contract Documents shall subject Contractor to liquidated damages as hereinafter provided in this Agreement. Time is of the essence in these Contract Documents.

IX. INSURANCE

Contractor shall maintain in full force and effect at all times during the term of the Agreement, at its sole expense, policies of insurance in accordance with the General Provisions.

X. NO WAIVER OF REMEDIES

A. Neither the inspection by City or its agents, nor any order or certificate for the payment of money, nor any payment for, nor acceptance of the whole or any part of the Work by City, nor any extensions of time, nor any position taken by City or its agents shall operate as a waiver of any provision of this Agreement or of any power herein reserved to City or any right to damages herein provided, nor shall any waiver of any breach of the Agreement be held to be a waiver of any other or subsequent breach.

B. All remedies provided in this Agreement shall be taken and construed as cumulative; that is, in addition to each and every other remedy herein provided, and City shall have any and all equitable and legal remedies which it would in any case have.

XI. DETERMINATION OF DAMAGES

A. The actual fact of the occurrences of damages and the actual amount of the damages which City would suffer if the Work were not completed within the specified times set forth are dependent upon many circumstances and conditions which could prevail in various combinations, and, from the nature of the case, it is impracticable and extremely difficult to fix the actual damages.

B. Damages which City would suffer in the event of delay include loss of the use of the Project, and, in addition, expenses of prolonged employment of an architectural and engineering staff; costs of administration, inspection, and supervision; and the loss suffered by the public within the City of Rocklin by reasons of the delay in the completion of the Project to serve the public at the earliest possible time.

C. Accordingly, the parties hereto agree, and by execution of this Agreement, Contractor acknowledges that it understands, has ascertained and agrees, that the amounts set forth herein as liquidated damages shall be presumed to be that amount of damages sustained by the failure of Contractor to complete the entire work within the times specified.

XII. LIQUIDATED DAMAGES

A. The amount of the liquidated damages to be paid by Contractor to City for failure to complete the entire work in the specified number of Working or Calendar Days (as extended, if applicable) will be Five Hundred **($500.00)** for each **Calendar day**, continuing to the time at which the Work is completed.

B. Such amount is the actual cash value agreed upon as the loss to City resulting from Contractor's delay.

VII. TERMINATION AFTER ALLOTTED WORKING OR CALENDAR DAYS

A. In addition to any rights it may have, City may terminate this Contract or the Contractor's right to proceed at any time after the allotted number of Working or Calendar Days as adjusted by any extensions of time for excusable delays that may have been granted.

B. Upon such termination Contractor any compensation shall be in accordance with Section 5.23 of the General Provisions, and it shall be liable to City for liquidated damages for all periods of time beyond such termination date until the Work is completed.

XIV. CONTRACTOR BANKRUPT

A. If Contractor should commence any proceeding under the Bankruptcy Act, or if contractor be adjudged a bankrupt, or if Contractor should make any assignment for the benefit of creditors, or if a receiver should be appointed on account of Contractor's insolvency, then the City Council may, without prejudice to any other right or remedy, terminate the Contract and complete the work by giving notice to Contractor and his surety according to the provisions of Article 5 of the General Provisions.

B. City shall have the right to complete, or cause completion of the work, all as specified in the General Provisions of the General Provisions.

XV.PERFORMANCE AND PAYMENT BONDS

A. The Contractor shall, before beginning said work, file two bonds with the City, each made payable to the City. These bonds shall be issued by a Surety Company authorized to do business in the State of California, and shall be maintained during the entire life of the Contract at the expense of the Contractor.

   1. One bond shall be in the amount of one hundred percent (100%) of the Contract and shall guarantee the Faithful Performance of the Contract.
   2. The second bond shall be the Payment Bond required by Part 4, Title 15, Chapter 7, Division Three of the Civil Code of the State of California and shall be in the amount of one hundred percent (100%) of the Contract.

B. Any alteration or alterations made in any provision of this Contract shall not operate to release any surety from liability on any bond required hereunder and the consent to make such alterations is hereby given, and any surety on said bonds hereby waives the provisions of Section 2819 of the Civil Code.

C. Bonds shall only be accepted from an *"Admitted surety insurer"*, which means an insurer to which the Insurance Commissioner has issued a certificate of authority to transact surety insurance in this state. ***Contractor must submit all of the following with the bonds***:

- The original, or a certified copy, of the unrevoked appointment, power of attorney, bylaws or other instrument entitling or authorizing the person who executed the bond to do so.

XVI. SUBSTITUTION OF SECURITIES OF MONEY WITHHELD

A. At any time prior to final payment, Contractor may request substitution of securities for any money withheld by the City to ensure performance of the Contract.

B. At the expense of the Contractor, securities equivalent to the money withheld may be deposited with the City or with an approved financial institution as escrow agent according to a separate Security Agreement.

C. Securities eligible for substitution shall include those listed in Section 16430 of the Government Code or bank or savings and loan certificates of deposit. A fee set by the City Council shall be charged for such substitution.

XVII. LABOR CODE COMPLIANCE

A. City affirmatively identifies this project as a "public work" as that term is defined by Labor Code section 1720, and the project is, therefore, subject to prevailing wages under Labor Code section 1771.

B. Contractor and its subcontractors shall fully comply with all the provisions of the California Labor Code governing the performance of public works contracts including, but not limited to, payment of prevailing wages, limitations on time worked, compliance with apprentice requirements, maintenance of payroll records, posting of wages at job site and prohibitions against discrimination.

XVIII. UNFAIR COMPETITION

A. The following provision is included in this agreement pursuant to California Public Contract Code §7103.5.

> "In entering into a public works contract or a subcontract to supply goods, services, or materials pursuant to a public works contract, the contractor or subcontractor offers and agrees to assigning to the awarding body all rights, title, and interest in and to all causes of action it may have under Section 4 of the Clayton Act (15 U.S.C. Sec. 15) or under the Cartwright Act (Chapter 2 (commencing with Section 16700) of Part 2 of Division 7 of the Business and Professions Code), arising from purchases of goods, services, or materials pursuant to the public works contract or the subcontract. This assignment shall be made and become effective at the time the awarding body tenders final payment to the contractor, without further acknowledgment by the parties."

XIX. ASSIGNMENT

Neither this Agreement nor any rights herein of Contractor shall be assigned without the written consent of City first obtained.

XX. NO THIRD PARTY BENEFICIARIES

This Agreement is entered into solely between the City and Contractor. There are no third party beneficiaries, intended, unintended, or otherwise to this Agreement.

/////SIGNATURE PAGE FOLLOWS/////

IN WITNESS WHEREOF, the parties hereto have signed the Agreement on the date set forth opposite their names.

CONTRACTOR:

(California Corporations: must be signed by company's CEO, President, or Vice President *as well as* the Secretary or CFO.)

Date	Tax I.D. Number
Signature	Signature
Print Name	Print Name
Title	Title

CITY OF ROCKLIN, A Municipal Corporation:

Aly Zimmermann, City Manager

APPROVED AS TO FORM:

Matthew McOmber, City Attorney

ATTEST:

Avinta Singh, City Clerk

CERTIFICATE OF ACKNOWLEDGMENT pursuant to Civil Code, Section 1189, must be provided for Contractor's signature.

A notary public or other officer completing this certificate verifies only the identity of the individual who signed the document to which this certificate is attached, and not the truthfulness, accuracy, or validity of that document.

NOTARY TO ATTACH CURRENT ACKNOWLEDGMENT

CITY OF ROCKLIN
SEALED BID

(MUST BE SIGNED BY BIDDER)

Sealed Bids will be received not later than Time 1:00 p.m. on Wednesday, February 5, 2025, at the office of the City Clerk, 3970 Rocklin Road, Rocklin, California and opened at 1:00 p.m., or as soon thereafter as business allows.

TO THE HONORABLE CITY COUNCIL:
The undersigned hereby proposes and agrees to furnish any and all required labor, material, equipment transportation, and services for

2025 STRIPING AND MARKING MAINTENANCE SERVICES

in the City of Rocklin, County of Placer, California.

The work is to be done in strict conformity with the Contract Documents, at the following Lump Sum and/or Unit Prices:

PAINT

Item No.	Item Description	Detail	Estimated Quantity	Unit	Unit Price	July 1, 2025 - June 30, 2026	July 1, 2026 - June 30, 2027	July 1, 2027 - June 30, 2028	Total Amount
1	4' WHITE DASHED LANE LINE W/ REFELECTORS	9	40,000	LF	0.45	18,000.00	18,000.00	18,000.00	54,000.00
2	CERAMIC DOT DASHED LANE LINE W/ REFLECTORS	10	4,000	LF	1.16	4,640.00	4,640.00	4,640.00	13,920.00
3	DBL YELLOW CENTER LINE	21	4,000	LF	0.72	2,880.00	2,880.00	2,880.00	8,640.00
4	DBL YELLOW CENTER LINE W/ REFLECTORS	22	10,000	LF	0.99	9,900.00	9,900.00	9,900.00	29,700.00
5	4' YELLOW LEFT EDGE LINE W/ REFELCTORS @ 24' O.C	25	10,000	LF	0.53	5,300.00	5,300.00	5,300.00	15,900.00
6	4" RIGHT EDGE LINE	27b	10,000	LF	0.35	3,500.00	3,500.00	3,500.00	10,500.00
8	8" WHITE CHANNELIZING LINE W/ REFLECTORS	38	600	LF	0.99	594.00	594.00	594.00	1,782.00
9	6" WHITE BIKE LANE LINE	39	8,000	LF	0.45	3,600.00	3,600.00	3,600.00	10,800.00
10	6" WHITE DASHED BIKE LANE LINE	39A	400	LF	0.45	180.00	180.00	180.00	540.00
11	LANE LINE THROUGH INTERSECTIONS	40	400	LF	27.50	11,000.00	11,000.00	11,000.00	33,000.00
12	12" LIMIT LINE (WHITE OR YELLOW)		500	LF	6.60	3,300.00	3,300.00	3,300.00	9,900.00
13	INSTALLATION OF STANDARD MARKINGS AND LEGENDS		2,500	SF	6.05	15,125.00	15,125.00	15,125.00	45,375.00
14	MARKINGS REMOVAL		2,500	SF	8.25	20,625.00	20,625.00	20,625.00	61,875.00

15	STRIPING REMOVAL		5,000	LF	2.20	11,000.00	11,000.00	11,000.00	33,000.00
16	TYPE A MARKER 2 - WAY YELLOW		50	EA	8.69	434.50	434.50	434.50	1,303.50
17	TYPE 2 MARKER 1 - WAY WHITE		50	EA	8.69	434.50	434.50	434.50	1,303.50
18	BLUE MARKERS		50	EA	22.55	1,127.50	1,127.50	1,127.50	3,382.50
19	TYPE B MARKER 1- WAY YELLOW		50	EA	8.69	434.50	434.50	434.50	1,302.50
20	YELLOW BUTTONS CERAMIC		50	EA	8.69	434.50	434.50	434.50	1,302.50
21	WHITE BUTTONS CERAMIC		50	EA	8.69	434.50	434.50	434.50	1,302.50
22	K- MARKERS MEDIAN NOSES		20	EA	165.00	3,300.00	3,300.00	3,300.00	9,900.00
				TOTAL	$287.88	$116,244.00	$116,244.00	$116,244.00	$348,732.00

THERMO-PLASTIC

Item No.	Item Description	Detail	Estimated Quantity	Unit	Unit Price	July 1, 2025 - June 30, 2026	July 1, 2026 - June 30, 2027	July 1, 2027 - June 30, 2028	Total Amount
1	4' WHITE DASHED LANE LINE W/ REFELECTORS	9	40,000	LF	0.99	39,600.00	39,600.00	39,600.00	118,800.00
2	CERAMIC DOT DASHED LANE LINE W/ REFLECTORS	10	4,000	LF	1.16	4,640.00	4,640.00	4,640.00	13,920.00
3	DBL YELLOW CENTER LINE	21	4,000	LF	1.76	7,040.00	7,040.00	7,040.00	21,120.00
4	DBL YELLOW CENTER LINE W/ REFLECTORS	22	10,000	LF	2.42	24,200.00	24,200.00	24,200.00	72,600.00
5	4' YELLOW LEFT EDGE LINE W/ REFELCTORS @ 24' O.C	25	10,000	LF	1.16	11,600.00	11,600.00	11,600.00	34,800.00
6	4" RIGHT EDGE LINE	27b	10,000	LF	0.99	9,900.00	9,900.00	9,900.00	29,700.00
8	8" WHITE CHANNELIZING LINE W/ REFLECTORS	38	600	LF	2.42	24,200.00	24,200.00	24,200.00	72,600.00
9	6" WHITE BIKE LANE LINE	39	8,000	LF	1.49	11,920.00	11,920.00	11,920.00	35,760.00
10	6" WHITE DASHED BIKE LANE LINE	39A	400	LF	1.49	596.00	596.00	596.00	1,788.00
11	LANE LINE THROUGH INTERSECTIONS	40	400	LF	27.50	11,000.00	11,000.00	11,000.00	33,000.00
12	12" LIMIT LINE (WHITE OR YELLOW)		500	LF	7.70	3,850.00	3,850.00	3,850.00	11,550.00
13	INSTALLATION OF STANDARD MARKINGS AND LEGENDS		2,500	SF	9.90	24,750.00	24,750.00	24,750.00	74,250.00
14	MARKINGS REMOVAL		2,500	SF	8.25	20,625.00	20,625.00	20,625.00	61,875.00

15	STRIPING REMOVAL		5,000	LF	2.20	11,000.00	11,000.00	11,000.00	33,000.00
16	TYPE A MARKER 2 - WAY YELLOW		50	EA	8.69	434.50	434.50	434.50	1,303.50
17	TYPE 2 MARKER 1 - WAY WHITE		50	EA	8.69	434.50	434.50	434.50	1,303.50
18	BLUE MARKERS		50	EA	22.55	1,127.50	1,127.50	1,127.50	3,382.50
19	TYPE B MARKER 1- WAY YELLOW		50	EA	8.69	434.50	434.50	434.50	1,303.50
20	YELLOW BUTTONS CERAMIC		50	EA	8.69	434.50	434.50	434.50	1,303.50
21	WHITE BUTTONS CERAMIC		50	EA	8.69	434.50	434.50	434.50	1,303.50
22	K- MARKERS MEDIAN NOSES		20	EA	165.00	3,300.00	3,300.00	3,300.00	9,900.00
				TOTAL	$300.43	$188,773.00	$188,773.00	$188,773.00	$566,319.00

Total Project Bid including Paint and Thermoplastic total amounts, shall be (spell out) nine hundred fifteen thousand fifty-one Dollars ($ 915,051.00).

The initial contract will be for a term of three (3) years from the date of award. The City may renew the contract for up to two (2) additional years, one year at a time. Sixty days prior to the expiration date of the current contract, the City may re-negotiate out-year pricing (increases and/or decreases) based on market fluctuations.

If the term of the contract is extended beyond the initial three-year term, any requests made by the Contractor for a price increase must be fully documented utilizing an appropriate Consumer or Producer Price Index or other relevant market data to justify a price change, not to exceed 4%. In its request for price increases Contractor shall cite sources, specific conditions, and document how those conditions affect the cost.

If awarded the Contract, the undersigned shall execute said Contract and furnish the necessary Performance and Payment Bonds and insurance within ten (10) calendar days after the Notice of Award of said Contract and begin work as set forth in the written Notice to Proceed from the City of Rocklin (hereinafter referred to as the "City") to Contractor.

In determining the amount bid by each bidder, the City shall disregard mathematical errors in addition, subtraction, multiplication, and division that appear obvious on the face of the Bid. When such a mathematical error appears on the Bid, the City shall have the right to correct such error and to compute the total amount bid by said bidder on the basis of the corrected figure or figures.

When an item price is required to be set forth in the Bid, and the total for the item set forth separately does not agree with a figure which is derived by multiplying the item price times the Engineer's estimate of the quantity of work to be performed for said item, the item price shall prevail over the sum set forth as the total for the item unless, in the sole discretion of the City, such a procedure would be inconsistent with the policy of the bidding procedure. The total paid for each such item of work shall be based upon the item price and not the total price. Should the Bid contain only a total price for the item and the item price is omitted, the City shall

determine the item price by dividing the total price for the item by Engineer's estimate of the estimated quantities of work to be performed as items of work.

If the Bid contains neither the item price nor the total price for the item, then it shall be deemed incomplete and the Bid shall be disregarded.

It is understood that this Bid is based upon completion of the work to within a period of calendar days commencing on the day the Notice to Proceed is issued.

The undersigned represents and warrants that the undersigned has examined the location of the proposed work and is familiar with the local conditions at the place where the work is to be done, and the undersigned has reviewed and understands the plans, specifications and other Contract Documents, and the undersigned is satisfied with all conditions for the performance of the work.

The undersigned has checked carefully all of the above figures and understands that the City of Rocklin will not be responsible for any errors or omissions on the part of the undersigned in making up this Bid.

The Contractor shall initial below that it has received the appropriate addenda and has incorporated the addenda into its Bid.

Addenda Received and Acknowledged
No. 1 N/A
No. 2 _____
No. 3 _____

BID DEPOSIT ENCLOSED IN THE FOLLOWING FORM:

$ 91,505.10 not less than ten percent (10%) of amount Bid, plus additive alternates.

- ☐ CERTIFIED CHECK
- ☐ MONEY ORDER
- ☐ CASHIER'S CHECK
- ☒ BID BOND

AGREEMENT

It is understood and agreed that if written notice of the City's acceptance of this Bid is mailed, emailed, or delivered to the undersigned Bidder after the opening of the bid, and within the time set in the Notice to Contractors or at any time thereafter before this Bid is withdrawn, the undersigned Bidder will execute and deliver to the City the Agreement for Construction in accordance with the Bid as accepted, within ten (10) days after receipt of notification of award, and that the Work under the Contract shall be commenced by the undersigned Bidder, if awarded the Contract, on the date to be stated in a Notice to Proceed and shall be completed in the time specified in the Contract Documents. In the event the Bidder to whom an award is made fails or refuses to execute the Agreement for Construction within ten (10) days from the

date of receiving notification that it is the Bidder to whom the Contract is awarded, the City may declare the Bidder's bid deposit or bond forfeited as damages caused by the failure of the Bidder to enter into the Agreement for Construction.

The undersigned Bidder agrees that the information and representations provided herein are made under penalty of perjury.

NOTE: If Bidder is a corporation, the legal name of the corporation shall be set forth below, together with the signatures of authorized officers or agents and the document shall bear the corporate seal; if Bidder is a partnership, the true name of the firm shall be set forth below together with the signature of the partner or partners authorized to sign contracts on behalf of the partnership; and if Bidder is an individual, his/her signature shall be placed below.

SIGNATURE IS ON SEPARATE PAGE TO PERMIT BLIND SELECTION/RANKING OF BIDDERS, IF APPLICABLE

NAME OF BIDDER:

Sierra Traffic Markings, Inc.

Affix Corporate Seal Here

BY: _____
Signature

Ron Johnson
Type/Print Name

President / CEO
Title

DATE: 1/31/2025

Valid Contractor's License No.: 755317

Expiration date: 3/31/2026

Public Works Registration No. 1000002783

ATTACHMENT A

BID BOND
City of Rocklin

We, Sierra Traffic Markings, Inc., as principal, and Western Surety Company, as Surety are held and firmly bound unto the City of Rocklin, hereafter referred to as "Obligee", in the penal sum of ten percent (10%) of the total amount of the Bid of the Principal submitted to the Obligee for the Work described below, for the payment of which sum we hold and firmly bind ourselves, our heirs, executors, administrators, successors and assigns, jointly and severally,

THE CONDITION OF THIS OBLIGATION IS SUCH, THAT:
WHEREAS, the Principal is submitting a Bid to the Obligee, for
2025 Striping and Marking Maintenance Services
in the City of Rocklin, County of Placer, California
(Copy here the exact description of work, including location, as it appears on the Bid)

for which Bids are to be opened at Rocklin, CA on February 5, 2025
(Insert date of Bid opening)

NOW, THEREFORE, if the Principal is awarded the Contract and after the prescribed forms are presented to him for signature, enters into a written contract, in the prescribed form, in accordance with the Bid, and files two bonds with the Obligee, one to guarantee faithful performance of the contract and the other to guarantee payment for labor and materials as provided by law, then this obligation shall be null and void; otherwise, it shall remain in full force.

The Surety, for value received, hereby stipulates and agrees that no change, extension of time for award of a contract after opening of Bids, alteration, addition, modification, or supplement to the terms of the Notice to Contractors/Invitation for Bids, the Work to be performed thereunder, or the Contract Documents, shall in any way affect the Surety's obligations under this Bond, and the Surety does hereby waive notice of any such change, extension of time, alteration, addition, modification or supplement to the terms of said Notice to Contractors/Invitation for Bids, the Work to be performed thereunder, or the Contract Documents.

In the event suit is brought upon this bond by the Obligee and judgment is recovered, the Surety shall pay all costs incurred by the Obligee in such suit, including reasonable attorneys' fees to be fixed by the court.

Dated: January 30, 2025

Principal: Sierra Traffic Markings, Inc.

By: Ron Johnson, President/CEO

Surety: Western Surety Company

Address: 151 N. Franklin St., 17th Floor, Chicago, IL 60606

Telephone: 800-331-6053

Attorney in Fact: Cassandra Medina
Cassandra Medina, Attorney-In-Fact

(Attach Attorney-In-Fact Certificate, Corporate Seal and Surety Seal)

NOTICE:

A CERTIFICATE OF ACKNOWLEDGMENT IN ACCORDANCE WITH THE PROVISIONS OF CIVIL CODE SECTION 1189 MUST BE ATTACHED FOR EACH PERSON EXECUTING THIS AGREEMENT ON BEHALF OF BIDDER AND SURETY.

NEVADA NOTARY ACKNOWLEDGMENT

THE STATE OF NEVADA

COUNTY OF Washoe

This instrument was acknowledged before me on January 30th, 2025

(date) by Cassandra Medina, (name of person).

Julie Heimdal

Notary Public Signature

JULIE HEIMDAL
Notary Public
State of Nevada
Appt. No. 23-5258-02
My Appt. Expires Aug. 11, 2027

Print Julie Heimdal

Title Notary Public

(Seal)

Western Surety Company

POWER OF ATTORNEY APPOINTING INDIVIDUAL ATTORNEY-IN-FACT

Know All Men By These Presents, That WESTERN SURETY COMPANY, a South Dakota corporation, is a duly organized and existing corporation having its principal office in the City of Sioux Falls, and State of South Dakota, and that it does by virtue of the signature and seal herein affixed hereby make, constitute and appoint

John Hopkins, Steve Williams, Joseph H Weber, Renee Ramsey, Elizabeth Collodi, Mindy Whitehouse, John Weber, Sara Walliser, Jennifer Lakmann, Jessica Monlux, Samantha Watkins, Deanna Quintero, Bill Rapp, Jason March, Matthew Foster, Tony Clark, Brad Espinosa, Paula Senna, Pam Sey, Breanna Boatright, Kathleen Le, Phil Watkins, Sharon Smith, Cassandra Medina, Individually

of Chico, CA, its true and lawful Attorney(s)-in-Fact with full power and authority hereby conferred to sign, seal and execute for and on its behalf bonds, undertakings and other obligatory instruments of similar nature

- In Unlimited Amounts -

and to bind it thereby as fully and to the same extent as if such instruments were signed by a duly authorized officer of the corporation and all the acts of said Attorney, pursuant to the authority hereby given, are hereby ratified and confirmed.

This Power of Attorney is made and executed pursuant to and by authority of the Authorizing By-Laws and Resolutions printed at the bottom of this page, duly adopted, as indicated, by the shareholders of the corporation.

In Witness Whereof, WESTERN SURETY COMPANY has caused these presents to be signed by its Vice President and its corporate seal to be hereto affixed on this 30th day of March, 2024.

WESTERN SURETY COMPANY

Larry Kasten, Vice President

State of South Dakota
County of Minnehaha } ss

On this 30th day of March, 2024, before me personally came Larry Kasten, to me known, who, being by me duly sworn, did depose and say: that he resides in the City of Sioux Falls, State of South Dakota; that he is a Vice President of WESTERN SURETY COMPANY described in and which executed the above instrument; that he knows the seal of said corporation; that the seal affixed to the said instrument is such corporate seal; that it was so affixed pursuant to authority given by the Board of Directors of said corporation and that he signed his name thereto pursuant to like authority, and acknowledges same to be the act and deed of said corporation.

My commission expires
March 2, 2026

M. BENT
NOTARY PUBLIC
SOUTH DAKOTA

M. Bent, Notary Public

CERTIFICATE

I, Paula Kolsrud, Assistant Secretary of WESTERN SURETY COMPANY do hereby certify that the Power of Attorney hereinabove set forth is still in force, and further certify that the By-Law and Resolutions of the corporation printed below this certificate are still in force. In testimony whereof I have hereunto subscribed my name and affixed the seal of the said corporation this 30th day of January, 2025

WESTERN SURETY COMPANY

Paula Kolsrud, Assistant Secretary

Authorizing By-Laws and Resolutions

ADOPTED BY THE SHAREHOLDERS OF WESTERN SURETY COMPANY

This Power of Attorney is made and executed pursuant to and by authority of the following By-Law duly adopted by the shareholders of the Company.

Section 7. All bonds, policies, undertakings, Powers of Attorney, or other obligations of the corporation shall be executed in the corporate name of the Company by the President, Secretary, and Assistant Secretary, Treasurer, or any Vice President, or by such other officers as the Board of Directors may authorize. The President, any Vice President, Secretary, any Assistant Secretary, or the Treasurer may appoint Attorneys in Fact or agents who shall have authority to issue bonds, policies, or undertakings in the name of the Company. The corporate seal is not necessary for the validity of any bonds, policies, undertakings, Powers of Attorney or other obligations of the corporation. The signature of any such officer and the corporate seal may be printed by facsimile.

This Power of Attorney is signed by Larry Kasten, Vice President, who has been authorized pursuant to the above Bylaw to execute power of attorneys on behalf of Western Surety Company.

This Power of Attorney may be signed by digital signature and sealed by a digital or otherwise electronic-formatted corporate seal under and by the authority of the following Resolution adopted by the Board of Directors of the Company by unanimous written consent dated the 27th day of April, 2022:

"RESOLVED: That it is in the best interest of the Company to periodically ratify and confirm any corporate documents signed by digital signatures and to ratify and confirm the use of a digital or otherwise electronic-formatted corporate seal, each to be considered the act and deed of the Company."

Go to www.cnasurety.com > Owner / Obligee Services > Validate Bond Coverage, if you want to verify bond authenticity.

Form F4280-6-2023

CALIFORNIA CERTIFICATE OF ACKNOWLEDGMENT

A notary public or other officer completing this certificate verifies only the identity of the individual who signed the document to which this certificate is attached, and not the truthfulness, accuracy, or validity of that document.

State of California)

County of Placer)

On January 31, 2025 before me, Kelli A. Cornelison, Notary Republic ,
(here insert name and title of the officer)

personally appeared Ron Johnson

,

who proved to me on the basis of satisfactory evidence to be the person(s) whose name(s) is/are subscribed to the within instrument and acknowledged to me that he/she/they executed the same in his/her/their authorized capacity(ies), and that by his/her/their signature(s) on the instrument the person(s), or the entity upon behalf of which the person(s) acted, executed the instrument.

I certify under PENALTY OF PERJURY under the laws of the State of California that the foregoing paragraph is true and correct.

WITNESS my hand and official seal.

KELLI A. CORNELISON
Notary Public - California
Placer County
Commission # 2357081
My Comm. Expires May 11, 2025

Signature Kelli A Cornelison

(Seal)

Optional Information

Although the information in this section is not required by law, it could prevent fraudulent removal and reattachment of this acknowledgment to an unauthorized document and may prove useful to persons relying on the attached document.

Description of Attached Document

The preceding Certificate of Acknowledgment is attached to a document titled/for the purpose of Bid Bonds for City of Rocklin 2025 Striping and Marking ,

containing _____ pages, and dated _____ .

The signer(s) capacity or authority is/are as:

- ☐ Individual(s)
- ☐ Attorney-in-Fact
- ☐ Corporate Officer(s) _____
  Title(s)
- ☐ Guardian/Conservator
- ☐ Partner - Limited/General
- ☐ Trustee(s)
- ☐ Other: _____

representing: _____
Name(s) of Person(s) or Entity(ies) Signer is Representing

Additional Information

Method of Signer Identification

Proved to me on the basis of satisfactory evidence:
○ form(s) of identification ○ credible witness(es)

Notarial event is detailed in notary journal on:
Page # 99 Entry # 4

Notary contact: _____

Other

☐ Additional Signer(s) ☐ Signer(s) Thumbprint(s)

☐ _____

© Copyright 2007-2016 Notary Rotary, Inc. PO Box 41400, Des Moines, IA 50311-0507. All Rights Reserved. Item Number 101772. Please contact your Authorized Reseller to purchase copies of this form.

ATTACHMENT B

SUBCONTRACTOR LISTING FORM

LIST OF SUBCONTRACTORS FOR Sierra Traffic Markings, Inc.
(BIDDER)

PROJECT: 2025 Striping and Marking Maintenance Services

Pursuant to the provisions of Sections 4100 to 4114 inclusive, of the California Public Contract Code, and as set forth in Instructions to Bidders, and the General Conditions, the above named Contractor hereby designates below the names, contractor license numbers, and locations of the place of business of each Subcontractor. Please check one of the boxes and sign below:

X We are not using any Subcontractors.

____ All of our Subcontractors are performing at least 1/2 of 1% of the Work listed below, including for additive Alternates, if any.

WORK TO BE PERFORMED	NAME & BUSINESS ADDRESS OF SUBCONTRACTOR	LICENSE NUMBER	DIR #
N/A	N/A	N/A	N/A

Signed Ron Johnson - President / CEO

Bidders shall provide the registration numbers for all listed Subcontractors within 24 hours of bid opening and registration numbers of all Subcontractors who are not required to be listed not later than 24 hours before they are to start work on the Project.

ATTACHMENT C

NONCOLLUSION AFFIDAVIT

STATE OF CALIFORNIA
COUNTY OF Placer

Ron Johnson, being first duly sworn, deposes and says that he or she is President / CEO [Title] of Sierra Traffic Markings, Inc., the party making the foregoing Bid, that the Bid is not made in the interest of, or on behalf of, any undisclosed person, partnership, company, association, organization, or corporation; that the Bid is genuine and not collusive or sham; that Bidder has not directly or indirectly induced or solicited any other Bidder to put in a false or sham Bid, and has not directly or indirectly colluded, conspired, connived, or agreed with any Bidder or anyone else to put in a sham bid or to refrain from bidding; that Bidder has not in any manner, directly or indirectly, sought by agreement, communication, or conference with anyone to fix the price Bid of Bidder or any other Bidder, or to fix any overhead, profit, or cost element of the price Bid, or of that of any other Bidder. All statements contained in the Bid are true. Bidder has not, directly or indirectly, submitted its price Bid or any breakdown thereof, or the contents thereof, or divulged information or data relative thereto, to any corporation, partnership, company association, organization, bid depository, or to any member or agent thereof to effectuate a collusive or sham Bid, and has not paid, and will not pay, any person or entity for such purpose.

Any person executing this declaration on behalf of a Bidder that is a corporation, partnership, joint venture, limited liability company, limited liability partnership, or any other entity, hereby represents that he or she has full power to execute, and does execute, this declaration on behalf of the Bidder.

Signed: Ron Johnson

Title: President / CEO

A notary public or other officer completing this certificate verifies only the identity of the individual who signed the document to which this certificate is attached, and not the truthfulness, accuracy, or validity of that document.

KELLI A. CORNELISON
Notary Public - California
Placer County
Commission # 2357081
My Comm. Expires May 11, 2025

(seal)

Subscribed and sworn to before me this

31st day of January, 20 25,
by Ron Johnson
proved to me on the basis of satisfactory evidence to be the person(s) who appeared before me.

Signature

ATTACHMENT D

CERTIFICATION REGARDING DEBARMENT, SUSPENSION, PROPOSED DEBARMENT OR SUSPENSION

Bidder hereby certifies, to the best of its knowledge and belief, except as expressly disclosed on this Certificate, that:

The Bidder and/or any of its Principals:

1. Are not presently debarred, suspended, proposed for debarment or suspension, or declared ineligible for award of the contract by any Federal, State, or local agency.

2. Have not, within a three-year period preceding this Bid, been convicted of or had a civil judgment rendered against them for: commission of fraud or a criminal offense in connection with obtaining, attempting to obtain, or performing a public (Federal, State or local) contract or subcontract; violation of Federal or State antitrust statutes relating to the submission of offers; or commission of embezzlement, theft, forgery, bribery, falsification or destruction of records, making false statements, tax evasion, or receiving stolen property.

3. Are not presently indicted for, or otherwise criminally or civilly charged by a government entity with, commission of any of the offenses enumerated in Item 2. above.

4. The Bidder has not, within a three-year period preceding this offer, had one or more contracts terminated for default by any Federal, State, or local agency.

"Principals," for the purposes of this certification, means: officers; directors; owners; partners; and, persons having primary management or supervisory responsibilities within a business entity (e.g., general manager; plant manager; head of a subsidiary, division, or business segment, and similar positions).

Bidder shall provide immediate written notice to the City if, at any time prior to contract award, Bidder learns that its certification was erroneous when submitted or has become erroneous by reason of changed circumstances.

This Certification is a material representation of fact upon which reliance will be placed when making the award, if and when made. If it is later determined that Bidder knowingly rendered an erroneous certification, in addition to other remedies available to the City, the City may terminate the Contract resulting from this solicitation for default.

BIDDER: Sierra Traffic Markings, Inc Date 1/31/2025

BY: _____
Signature

Ron Johnson
Type/Print Name

President / CEO
Title

EXCEPTIONS TO CERTIFICATION

If Bidder has any exceptions to the Certification set forth above, state the exception and an explanation of the circumstances:

N/A

BIDDER: Sierra Traffic Markings, Inc Date 1/31/2025

BY: _____
Signature

Ron Johnson
Type/Print Name

President / CEO
Title

ATTACHMENT E

RESOLUTION OF DISPUTES REGARDING THE BIDDING PROCESS

The lack of a prompt procedure to resolve disputes regarding the bidding process would impair the City's ability to carry out its purpose of constructing this project in a timely manner. Therefore, to the maximum extent authorized by law and notwithstanding any other procedures specified in documents referenced herein, all disputes and/or protests regarding the bidding process shall be subject to the following procedure. In submitting a Bid to the City for this project, the Bidder agrees to comply with and to be bound by this procedure.

1. If the Bidder believes that any provision in the solicitation for Bids is vague, ambiguous, conflicting or contrary to law, then the Bidder shall promptly bring its concern to the City by written notice specifying the provision(s) in question and the factual and legal bases for concern. Failure of the Bidder to raise any concern relating to a solicitation requirement within at least two (2) working days prior to the Bid due date will be deemed a waiver of the Bidder's right to protest based on alleged vague, ambiguous, conflicting or unlawful requirements in the solicitation.

2. Within five (5) calendar days after the opening of Bids, Bidder shall provide a written notice to the City of any and all mistakes regarding the Bid for which a Bidder requests relief. The City shall not consider any requests for relief due to mistake if notice is not received within the time requirements of Public Contract Code section 5100, *et seq.*, Relief of Bidders.

3. No later than five (5) calendar days after Bids are opened, the Bidder must submit in writing to the City an explanation of all legal and factual grounds for any protest. These requirements are to be strictly construed. Untimely protests and/or grounds not set forth in the protest will not be considered. Failure to timely protest or otherwise comply with the protest requirements will constitute a waiver of the right to challenge and forever bar the Bidder from challenging, whether before the City or any administrative or judicial tribunal, any particular Bid(s), the bidding process, or the Contract award on any ground not set forth in the protest. Upon receipt of a protest, the City will provide a copy to any Bidder whose Bid is challenged in the protest.

4. If a timely written protest is provided to the City at least two (2) business days before any City Council meeting at which the award of the Contract will be considered, then the City shall make reasonable efforts to provide the protesting Bidder with a written response to the protest prior to the City Council meeting. A copy of any City response will be provided to any other Bidder responding to the protest.

5. Notice of the date and time of the City Council meeting at which the award of the Contract for the Project shall be considered will be posted on the City's website.

6. Any Bidder complying with the above procedure may bring an action within sixty (60) days from the action of the City Council, in accordance with Sections 860 and 863 of the California Code of Civil Procedure, to determine the validity of the City Council's action on the award of the contract. The City shall be a defendant and shall be served with the summons and complaint in the action in the manner

provided by law for the service of a summons in a civil action. In any such action the summons shall be in the form prescribed in Section 861.1 of the California Code of Civil Procedure except that in addition to being directed to "all persons interested in the matter of [specifying the matter]," it shall also be directed to the City. If the bidder bringing such action fails to complete the publication and such other notice as may be prescribed by the court in accordance with Section 863 of the California Code of Civil Procedure and to file proof thereof in the action within 60 days from the filing of his complaint, the action shall be dismissed on the motion of the City unless good cause for such failure is shown by the bidder.

Sierra Traffic Markings, Inc
Contractor

1/31/2025
Date

Signature Ron Johnson - President/CEO

ATTACHMENT F

CERTIFICATE OF AUTHORIZATION
(If Bidder is a Corporation or a Limited Liability Corporation)

STATE OF CALIFORNIA
COUNTY OF Placer

I HEREBY CERTIFY that at a meeting of the Board of Directors of the Sierra Traffic Markings, Inc, a corporation existing under the laws of the State of California, held on JANUARY 15, 2025, the following resolution was duly passed and adopted:

> "RESOLVED, that Ron Johnson, as President / CEO of the Corporation, be and is hereby authorized to execute the Bid dated February 5th, 2025, to the City of Rocklin and this Corporation and that his/her execution thereof, attested by the Secretary of the Corporation, and with the Corporate seal fixed, shall be the official act and deed of this Corporation."

I further Certify that said resolution is now in full force and effect.
IN WITNESS WHEREOF, I have hereunto set my hand and affixed the official seal of the Corporation this 31ST day of JANUARY, 2025.

Secretary Ron Johnson

Corporate Officer Ron Johnson

(seal)

9725 Del Road, Ste B Roseville, CA 95747
Corporate Address

ATTACHMENT G

[Projects of One Million Dollars ($1,000,000.00) or More

IRAN CONTRACTING ACT CERTIFICATION

Pursuant to California Public Contract Code (PCC) section 2204, an Iran Contracting Act certification is required for solicitations of goods or services of $1,000,000 or more.

To submit a bid to the City of Rocklin, you must complete **ONLY ONE** of the following two paragraphs. To complete paragraph 1, check the corresponding box **and** complete the certification for paragraph 1. To complete paragraph 2, simply check the corresponding box.

☒ 1. We are not on the current list of persons engaged in investment activities in Iran created by the California Department of General Services ("DGS") pursuant to PCC 2203(b), and we are not a financial institution extending twenty million dollars ($20,000,000) or more in credit to another person, for 45 days or more, if that other person will use the credit to provide goods or services in the energy sector in Iran and is identified on the current list of persons engaged in investment activities in Iran created by DGS.

OR

☐ 2. We have received written permission from the SLDMWA to submit a proposal pursuant to PCC 2203(c) or (d). *A copy of the written permission from the SLDMWA is included with our proposal.*

CERTIFICATION FOR PARAGRAPH 1:

I, the official named below, CERTIFY UNDER PENALTY OF PERJURY, that I am duly authorized to legally bind the Proposer to the clause in paragraph 1. This certification is made under the laws of the State of California.

BIDDER: Sierra Traffic Markings, Inc Date 1/31/2025

BY: _____
Signature

Ron Johnson
Type/Print Name

President / CEO
Title

Executed in the County of Placer, State of California.

ROCKLIN
CALIFORNIA

CITY OF ROCKLIN BID SUMMARY

PROJECT: 2025 Striping and Marking Maintenance Services	
DATE: February 5, 2025	TIME: 1:00pm

Name/Address/Phone of Bidder	Bid Amount	Alt. Bid Amt	Addendum(S) Acknowledged	Bid Bond / Cashier Check
1. Sierra Traffic Markings Inc.	$915,051.00	$		✓
2.	$	$		
3.	$	$		
4.	$	$		
5.	$	$		
6.	$	$		
7.	$	$		
8.	$	$		
9.	$	$		
10.	$	$		

Diane Ahn
Diane Ahn, Finance

2/5/25
Date

Avinta Singh, City Clerk

2/5/2025
Date

ROCKLIN
CALIFORNIA

City Council Staff Report

Subject: PFA1: Rocklin Public Financing Authority's Audited Basic Financial Statements for the Fiscal Year Ended June 30, 2024

Date: February 25, 2025

Submitted By: Angela Doyle, Senior Accountant
Daniel Choe, Administrative Services Deputy Director

Department: Administrative Services - Finance

Recommendation:
Adopt a Resolution of the Public Financing Authority of the City of Rocklin Accepting the Audited Basic Financial Statements for the Fiscal Year Ended June 30, 2024.

Background:
The Joint Exercise of Powers Act of the California Government Code Title 1, Division 7, Chapter 5, requires an annual audit of joint powers authorities and preparation of a report. The Rocklin Public Financing Authority (Authority) is a joint powers authority established by an agreement between the City of Rocklin and the former Rocklin Redevelopment Agency.

The Authority is governed by a Board consisting of members of the City Council. Oversight responsibility, the ability to conduct independent financial affairs, issue debt instruments, approve budgets, and otherwise influence operations and account for fiscal matters is exercised by the Authority's governing board. The Authority is a blended component unit of the City for financial reporting purposes, and this Basic Financial Statements report reflects the assets, liabilities, fund balances/net position, revenues, and expenditures of the Authority only.

An independent financial audit of the Rocklin Public Financing Authority, performed by the auditing firm of Chavan & Associates, LLP for the year ended June 30, 2024, has been completed. The Basic Financial Statements of the Rocklin Public Financing Authority, for the year ended June 30, 2024, have been prepared. Chavan & Associates, LLP has issued an unqualified ("clean") auditor's opinion.

The Audited Basic Financial Statements for the Year Ended June 30, 2024 is now presented to the Rocklin Public Financing Authority Board, for acceptance by resolution.

ATTACHMENTS:
1. Resolution
2. Resolution Exhibit A - 2023/24 RPFA Audited Financial Statements

RESOLUTION NO. 2025- PFA

RESOLUTION OF THE ROCKLIN PUBLIC FINANCING AUTHORITY
ACCEPTING THE AUDITED BASIC FINANCIAL STATEMENTS
FOR THE FISCAL YEAR ENDED JUNE 30, 2024

WHEREAS, the Joint Exercise of Powers Act, California Government Code Title 1, Division 7, Chapter 5, requires an annual audit of joint powers authorities and preparation of a report; and

WHEREAS, Chavan & Associates LLP performed an independent audit of the Rocklin Public Financing Authority for the year ended June 30, 2024, and prepared Basic Financial Statements of the Rocklin Public Financing Authority; and

WHEREAS, Chavan & Associates LLP has issued an unqualified ("clean") auditor's opionion.

NOW, THEREFORE, BE IT RESOLVED by the Rocklin Public Financing Authority as follows:

Section 1. The audited Basic Financial Statements for the Rocklin Public Financing Authority for fiscal year ended June 30, 2024, attached hereto as Exhibit "A," are accepted.

PASSED AND ADOPTED this 25th day of February, 2025, by the following vote:

AYES: Councilmembers:
NOES: Councilmembers:
ABSENT: Councilmembers:
ABSTAIN: Councilmembers:

_____
Jill Gayaldo, Mayor

ATTEST:

_____
Avinta Singh, City Clerk

ROCKLIN PUBLIC FINANCING AUTHORITY

AUDITED FINANCIAL STATEMENTS

FOR THE YEARS ENDED
JUNE 30, 2024 AND 2023

Chavan & Associates, LLP
Certified Public Accountants
16450 Monterey Road #5
Morgan Hill, CA 95037

Page Intentionally Left Blank

TABLE OF CONTENTS

FINANCIAL SECTION
Independent Auditor's Report 1

Management's Discussion and Analysis (Required Supplementary Information) 5

Basic Financial Statements:
Government-Wide Financial Statements:
Statement of Net Position 12
Statement of Activities 13
Fund Financial Statements
Governmental Funds:
Balance Sheet 14
Reconciliation of the Government Funds Balance Sheet to the Government-Wide Financial Statement of Net Position 15
Statement of Revenues, Expenditures and Changes in Fund Balances 16
Reconciliation of the Governmental Funds Statement of Revenues, Expenditures and Changes in Fund Balances to the Government-Wide Statement of Activities 17

Notes to the Basic Financial Statements 19

OTHER INDEPENDENT AUDITOR'S REPORT
Independent Auditor's Report on Internal Control over Financial Reporting and on Compliance and Other Matters Based on an Audit of Financial Statement Performed in Accordance with *Government Auditing Standards* 32

This page is intentionally blank

FINANCIAL SECTION

Chavan and Associates, llp
Certified Public Accountants

INDEPENDENT AUDITOR'S REPORT

To the Board of Directors of the
Rocklin Public Financing Authority
Rocklin, California

Report on the Financial Statements

Opinion

We have audited the accompanying financial statements of the governmental activities and each major fund of the Rocklin Public Financing Authority (the "Authority"), as of and for the year ended June 30, 2024 and 2023, and the related notes to the financial statements, which collectively comprise the Authority's basic financial statements as listed in the table of contents.

In our opinion, the financial statements referred to above present fairly, in all material respects, the respective financial position of the governmental activities and each major fund of the Authority, as of June 30, 2024 and 2023 and the respective changes in financial position and, where applicable, cash flows thereof for the year then ended in accordance with accounting principles generally accepted in the United States of America.

Basis for Opinions

We conducted our audit in accordance with auditing standards generally accepted in the United States of America (GAAS) and the standards applicable to financial audits contained in *Government Auditing Standards*, issued by the Comptroller General of the United States. Our responsibilities under those standards are further described in the Auditor's Responsibilities for the Audit of the Financial Statements section of our report. We are required to be independent of the Authority and to meet our other ethical responsibilities, in accordance with the relevant ethical requirements relating to our audit. We believe that the audit evidence we have obtained is sufficient and appropriate to provide a basis for our audit opinions.

Emphasis of a Matter

Deficit Net Position

As of June 30, 2024 and 2023, the Authority's net position in its Government-wide financial statements was reported at a deficit mostly because of long-term liabilities as reported in Note 3 and deferred gains from the defeasance of long-term debt. Our opinion is not modified with respect to this matter.

Responsibilities of Management for the Financial Statements

Authority's management is responsible for the preparation and fair presentation of the financial statements in accordance with accounting principles generally accepted in the United States of America, and for the design, implementation, and maintenance of internal control relevant to the preparation and fair presentation of financial statements that are free from material misstatement, whether due to fraud or error.

16450 Monterey Road #5, Morgan Hill, CA 95037
Tel: 408-217-8749 • E-Fax: 408-872-4159
info@cnallp.com • www.cnallp.com

In preparing the financial statements, management is required to evaluate whether there are conditions or events, considered in the aggregate, that raise substantial doubt about the Authority's ability to continue as a going concern for twelve months beyond the financial statement date, including any currently known information that may raise substantial doubt shortly thereafter.

Auditor's Responsibilities for the Audit of the Financial Statements

Our objectives are to obtain reasonable assurance about whether the financial statements as a whole are free from material misstatement, whether due to fraud or error, and to issue an auditor's report that includes our opinions. Reasonable assurance is a high level of assurance but is not absolute assurance and therefore is not a guarantee that an audit conducted in accordance with GAAS will always detect a material misstatement when it exists. The risk of not detecting a material misstatement resulting from fraud is higher than for one resulting from error, as fraud may involve collusion, forgery, intentional omissions, misrepresentations, or the override of internal control. Misstatements are considered material if there is a substantial likelihood that, individually or in the aggregate, they would influence the judgment made by a reasonable user based on the financial statements.

In performing an audit in accordance with GAAS and GAGAS, we:

- Exercise professional judgment and maintain professional skepticism throughout the audit.
- Identify and assess the risks of material misstatement of the financial statements, whether due to fraud or error, and design and perform audit procedures responsive to those risks. Such procedures include examining, on a test basis, evidence regarding the amounts and disclosures in the financial statements.
- Obtain an understanding of internal control relevant to the audit in order to design audit procedures that are appropriate in the circumstances, but not for the purpose of expressing an opinion on the effectiveness of the Authority's internal control. Accordingly, no such opinion is expressed.
- Evaluate the appropriateness of accounting policies used and the reasonableness of significant accounting estimates made by management, as well as evaluate the overall presentation of the financial statements.
- Conclude whether, in our judgment, there are conditions or events, considered in the aggregate, that raise substantial doubt about the Authority's ability to continue as a going concern for a reasonable period of time.

We are required to communicate with those charged with governance regarding, among other matters, the planned scope and timing of the audit, significant audit findings, and certain internal control–related matters that we identified during the audit.

Required Supplementary Information

Accounting principles generally accepted in the United States of America require that the management's discussion and analysis be presented to supplement the basic financial statements. Such information, although not a part of the basic financial statements, is required by the Governmental Accounting Standards Board who considers it to be an essential part of financial reporting for placing the basic financial statements in an appropriate operational, economic, or historical context. We have applied certain limited procedures to the required supplementary information in accordance with auditing standards generally accepted in the United States of America, which consisted of inquiries of

16450 Monterey Road #5, Morgan Hill, CA 95037
Tel: 408-217-8749 • E-Fax: 408-872-4159
info@cnallp.com • www.cnallp.com

management about the methods of preparing the information and comparing the information for consistency with management's responses to our inquiries, the basic financial statements, and other knowledge we obtained during our audit of the basic financial statements. We do not express an opinion or provide any assurance on the information because the limited procedures do not provide us with sufficient evidence to express an opinion or provide any assurance.

Other Reporting Required by *Government Auditing Standards*

In accordance with *Government Auditing Standards*, we have also issued our report dated November 18, 2024, on our consideration of the Authority's internal control over financial reporting and on our tests of its compliance with certain provisions of laws, regulations, contracts, and grant agreements and other matters. The purpose of that report is to describe the scope of our testing of internal control over financial reporting and compliance and the results of that testing, and not to provide an opinion on internal control over financial reporting or on compliance. That report is an integral part of an audit performed in accordance with *Government Auditing Standards* in considering the Authority's internal control over financial reporting and compliance.

C & A LLP

November 18, 2024
Morgan Hill, California

16450 Monterey Road #5, Morgan Hill, CA 95037
Tel: 408-217-8749 • E-Fax: 408-872-4159
info@cnallp.com • www.cnallp.com

MANAGEMENT'S DISCUSSION AND ANALYSIS

INTRODUCTION

The Management's Discussion and Analysis (MD&A) is an integral component of the Authority's Annual Financial Report, as shown in the overview below. The purpose of the MD&A is to present a discussion and analysis of the Authority's financial performance for the fiscal year ended on June 30, 2024. This information, presented in conjunction with the Basic Financial Statements, is intended to provide a comprehensive understanding of the Authority's operations and financial standing.

Required Components of the Annual Financial Report

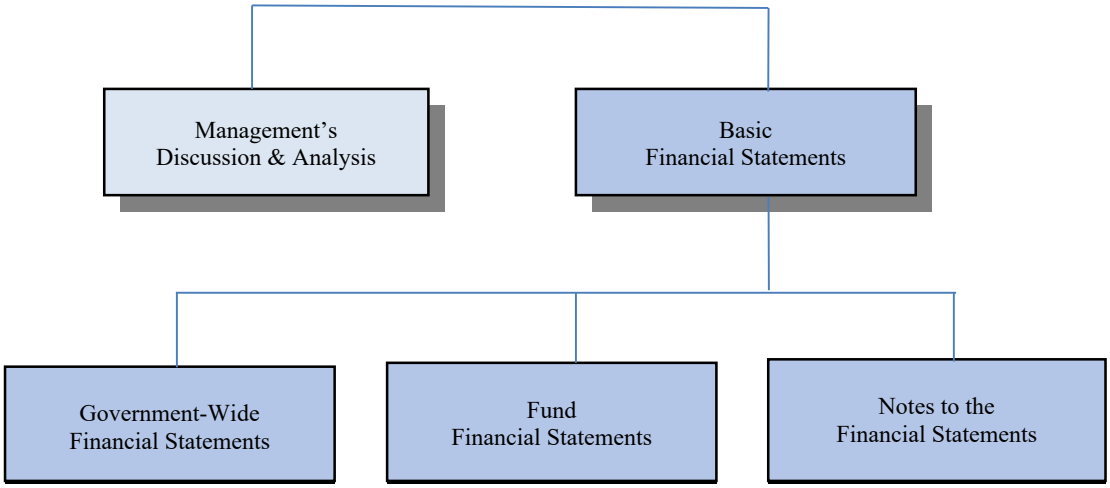

THE BASIC FINANCIAL STATEMENTS

The Basic Financial Statements are comprised of 1) Government-wide (Authority-wide) Financial Statements, and; 2) Fund Financial Statements. These two sets of financial statements provide the reader two different perspectives of the Authority's financial activities and financial position.

Government-wide Financial Statements provide a longer-term view of the Authority's activities as a whole, and comprise the *Statement of Net Position* and the *Statement of Activities*. The *Statement of Net Position* provides information about the financial position of the Authority as a whole, including all its capital assets and long-term liabilities on a full accrual basis, similar to that used by corporations. The *Statement of Activities* provides information about all the Authority's revenues and its expenses, also on a full accrual basis, with the emphasis on measuring net revenues and/or expenses for each of the Authority's programs. The *Statement of Activities* explains in detail the change in Net Position for the fiscal year.

All of the Authority's activities are required to be grouped into government activities and business-type activities. The entire amount in the *Statement of Net Position* and the *Statement of Activities* are also required to be separated into governmental activities or business-type activities in order to distinguish between these two types of activities of the Authority.

Fund Financial Statements report the Authority's operations in more detail than the government-wide statements and focus primarily on the short-term activities of the Authority's general fund and other major funds. The Fund Financial Statements measure only current revenues and expenditures and fund balances; they exclude capital assets, long-term debt, and other long-term amounts.

NOTES TO THE FINANCIAL STATEMENTS

Notes to the Financial Statements provide additional information that is essential to a full understanding of the data provided in the government-wide and fund financial statements. The notes can be found immediately following the fund financial statements.

GOVERNMENT-WIDE FINANCIAL ANALYSIS

The following table summarized the Authority's ending net position:

Table 1 - Net Position

	2024	2023	Dollar Change	Percent Change	2022
Assets					
Current	$ 1,105,003	$ 1,602,199	$ (497,196)	-31.0%	$ 2,088,247
Total Assets	$ 1,105,003	$ 1,602,199	$ (497,196)	-31.0%	$ 2,088,247
Liabilities					
Current	$ 516,181	$ 508,623	$ 7,558	1.5%	$ 501,348
Noncurrent liabilities	521,002	1,029,183	(508,181)	-49.4%	1,526,806
Total Liabilities	$ 1,037,183	$ 1,537,806	$ (500,623)	-32.6%	$ 2,028,154
Deferred Inflows of Resources	$ 663,305	$ 884,408	$ (221,103)	-25.0%	$ 1,105,511
Net Position					
Restricted	$ 68,364	$ 68,193	$ 171	0.3%	$ 68,025
Unrestricted	(663,849)	(888,208)	224,359	25.3%	(1,113,443)
Total Net Position	$ (595,485)	$ (820,015)	$ 224,530	27.4%	$ (1,045,418)

The changes in current assets, total liabilities and deferred inflow of resources were the results of scheduled debt service payments and the amortization of deferred gains from defeasance.

GOVERNMENTAL ACTIVITIES

An analysis of the changes in revenues, special items, and expenses by type of significant events follows:

Table 2 - Statement of Changes in Net Position

Functions/Programs	2024	2023	Dollar Change	Percent Change	2022
General Revenues and Special Items					
Investment earnings	$ 249,644	$ 260,341	$ (10,697)	-4.1%	$ 271,630
Total General Revenues and Special Items	249,644	260,341	(10,697)	-4.1%	271,630
Expenses					
Interest and fiscal charges	25,114	34,938	(9,824)	-28.1%	46,357
Total Expenses	25,114	34,938	(9,824)	-28.1%	46,357
Increase / (Decrease) in Net Position	224,530	225,403	(873)	0.4%	225,273
Net Position, Beginning of Year	(820,015)	(1,045,418)	225,403	-21.6%	(1,270,691)
Net Position, End of Year	$ (595,485)	$ (820,015)	$ 224,530	-27.4%	$ (1,045,418)

Significant changes in governmental revenues consisted of the following:

Investment earnings accounted for 100% of all revenue. Interest rates on Authority investments are predetermined and, therefore, subject to limited interest rate risk, providing a stable revenue source for the Authority.

DEBT ADMINISTRATION

The following table summarizes the Authority's debt at the end of the year:

Table 3 - Long-Term Debt

	2024	2023	Dollar Change	% Change	2022
Bank Loan - RPFA Refunding	$ 1,029,183	$ 1,526,806	$ (497,623)	-32.6%	$ 2,013,154

Additional detail and information on long-term debt activity is described in the notes to the financial statements (Note 3).

BUDGETARY HIGHLIGHTS

Changes from the Authority's original budget to the final budget are detailed in the Required Supplementary Information Section along with a comparison to actual activity for the year ended. Changes to the Authority's budget that increase appropriations in a fund must be approved by a resolution of the Board. Appropriations did not change during the year. The adopted and final expenditure budget was $525,900.

REQUEST FOR FINANCIAL INFORMATION

This financial report is designed to provide our customers and creditors a general overview of the Rocklin Public Financing Authority's finances and seeks to demonstrate the Authority's accountability for the money it receives. Questions concerning any of the information provided in this report or requests for additional information should be addressed to the Deputy Director of Administrative Services, 3970 Rocklin Road, Rocklin, California, 95677.

This page intentionally left blank

BASIC FINANCIAL STATEMENTS

This page intentionally left blank

Rocklin Public Financing Authority
Statement of Net Position
June 30, 2024 and 2023

	Governmental Activities	
	2024	2023
ASSETS		
Current Assets:		
Cash and investments	$ 7,456	$ 7,200
Restricted cash and investments	1,097,547	1,594,999
Total Assets	$ 1,105,003	$ 1,602,199
LIABILITIES		
Current Liabilities:		
Interest payable	$ 8,000	$ 11,000
Long-term debt - due within one year	508,181	497,623
Total Current Liabilities	516,181	508,623
Noncurrent Liabilities:		
Long-term debt - due after one year	521,002	1,029,183
Total Liabilities	$ 1,037,183	$ 1,537,806
DEFERRED INFLOWS OF RESOURCES		
Deferred Gain on Early Defeasance of Long-Term Debt	$ 663,305	$ 884,408
NET POSITION		
Restricted	$ 68,364	$ 68,193
Unrestricted	(663,849)	(888,208)
Total Net Position	$ (595,485)	$ (820,015)

The accompanying notes are an integral part of these financial statements.

Rocklin Public Financing Authority
Statement of Activities
For the year ended June 30, 2024 and 2023

	Net (Expense) Revenue and Change in Net Position	
Functions/Programs	2024	2023
Governmental Activities		
Expenses:		
Interest and fiscal charges	$ (25,114)	$ (34,938)
General Revenues:		
Investment earnings	249,644	260,341
Change in Net Position	224,530	225,403
Net Position - Beginning of Year	(820,015)	(1,045,418)
Net Position - End of Year	$ (595,485)	$ (820,015)

The accompanying notes are an integral part of these financial statements.

Rocklin Public Financing Authority
Balance Sheet
Governmental Funds
June 30, 2024 and 2023

	2024	2023
ASSETS		
Cash and investments	$ 7,456	$ 7,200
Restricted cash and investments	1,097,547	1,594,999
Total assets	$ 1,105,003	$ 1,602,199
FUND BALANCE		
Restricted for debt service	$ 1,105,003	$ 1,602,199
Total fund balance	$ 1,105,003	$ 1,602,199

The accompanying notes are an integral part of these financial statements.

Rocklin Public Financing Authority
Reconciliation of the Governmental Funds Balance Sheet to the Government-Wide Statement of Net Position
June 30, 2024 and 2023

	2024	2023
Total Fund Balances - Total Governmental Funds	$ 1,105,003	$ 1,602,199
Amounts reported for governmental activities in the statement of net position were different because:		
Interest payable on long-term debt did not require current financial resources. Therefore, interest payable was not reported as a liability in Governmental Funds Balance Sheet.	(8,000)	(11,000)
Long-term debt defeasances are reported in the funds as other financing uses based on cash payments related to the repayment of debt. However, the difference between the refunded debt and the refunding debt is reported as a deferred gain or loss in the government-wide statement of net position.	(663,305)	(884,408)
Long-term obligations were not due and payable in the current period. Therefore, they were not reported in the Governmental Funds Balance Sheet. The long-term liabilities were adjusted as follows:		
Pacific Premier bank loan	(1,029,183)	(1,526,806)
Net Position of Governmental Activities	$ (595,485)	$ (820,015)

The accompanying notes are an integral part of these financial statements.

Rocklin Public Financing Authority
Statement of Revenues, Expenditures, and Changes in Fund Balances
For the year ended June 30, 2024 and 2023

	2024	2023
REVENUES		
Use of money and property	$ 28,541	$ 39,238
Total Revenues	28,541	39,238
EXPENDITURES		
Debt service:		
Principal	497,623	486,348
Interest and fiscal charges	28,114	38,938
Total Expenditures	525,737	525,286
Excess (Deficiency) of Revenues over Expenditures	(497,196)	(486,048)
Net Change in Fund Balances	(497,196)	(486,048)
Fund Balances Beginning	1,602,199	2,088,247
Fund Balances Ending	$ 1,105,003	$ 1,602,199

The accompanying notes are an integral part of these financial statements.

Rocklin Public Financing Authority

Reconciliation of the Governmental Funds Statement of Revenues, Expenditures and Changes in Fund Balances to the Government-Wide Statement of Activities

For the year ended June 30, 2024 and 2023

	2024	2023
Net Change in Fund Balances - Total Governmental Funds	$ (497,196)	$ (486,048)
Amounts reported for governmental activities in the Statement of Activities and Changes in net position were different because:		
Repayment of long-term debt was an expenditure in governmental funds, but the repayment reduced long-term liabilities in the Government-Wide Statement of net position.	497,623	486,348
In governmental funds, deferred gain on early retirement of long-term debt is recognized as other finances uses. In the government-wide statements, the deferred gain on early retirement of long-term debt is amortized over the life of the debt. The difference between other financing uses and amortization is:	221,103	221,103
Interest expense on long-term debt was reported in the Government-Wide Statement of Activities and Changes in net position, but it did not require the use of current financial resources. Therefore, interest expense was not reported as expenditures in governmental funds. The following amount represented the net change in accrued interest from from prior year.	3,000	4,000
Change in Net Position of Governmental Activities	$ 224,530	$ 225,403

The accompanying notes are an integral part of these financial statements.

NOTES TO FINANCIAL STATEMENTS

NOTE 1 - ORGANIZATION AND SUMMARY OF SIGNIFICANT ACCOUNTING POLICIES

On December 13, 1994, pursuant to Article 1 of Chapter 5 of Division 7 of Title 1 of the Government Code of the State of California, the City of Rocklin (City) authorized the formation of a joint powers authority with the former Rocklin Redevelopment Agency to be known as the Rocklin Public Financing Authority (Authority).

The Authority is governed by a Board consisting of members of the City Council. Oversight responsibility, the ability to conduct independent financial affairs, issue debt instruments, approve budgets, and otherwise influence operations and account for fiscal matters is exercised by the Authority's governing board. The Authority is a blended component unit of the City for financial reporting purposes and the accompanying basic financial statements reflect the assets, liabilities, fund balances/net position, revenues, and expenditures/expenses of the Authority only.

The basic financial statements of the Authority have been prepared in conformity with generally accepted accounting principles (GAAP) as applied to governmental agencies. The Governmental Accounting Standards Boards (GASB) is the accepted standard setting body for establishing governmental accounting and financial reporting principles. The more significant of the Authority's accounting policies are described below.

A. Financial Reporting Entity

As defined by GASB Statement No. 39, *The Financial Reporting Entity*, the Authority is not financially accountable for any other entity other than itself, nor are there any other entities for which the nature and significance of their relationship with the Authority are such that exclusion would cause the Authority's financial statements to be misleading or incomplete.

B. Basis of Presentation, Accounting and Measurement Focus

The accounts of the Authority are organized and accounted for in a governmental type debt service fund, which is considered a separate accounting entity. This debt service fund was established to account for the debt service activity of the Public Financing authority. The operations of a fund are accounted for with a separate set of self-balancing accounts that comprise its assets, liabilities, fund equity, revenues, and expenditures or expenses, as appropriate. Governmental resources are allocated to and accounted for in a fund based upon the purposes for which they are to be spent and the means by which spending activities are controlled.

Government-Wide Financial Statements

The Authority's government-wide financial statements include a *Statement of Net Position* and a *Statement of Activities*. These statements present summaries of governmental activities for the Authority.

These statements are presented on an "economic resources" measurement focus and the accrual basis of accounting. Accordingly, all of the Authority's assets, deferred outflows of resources, liabilities, deferred inflows of resources (including capital assets, as well as infrastructure assets, and long-term liabilities), are included in the accompanying *Statement of Net Position*, as applicable. The *Statement of Activities* presents changes in net position. Under the accrual basis of accounting, revenues are recognized in the period in which they are earned while expenses are recognized in the period in which the liability is incurred. The Statement of Activities demonstrates the degree to which the direct expenses of a given function or segment is offset by program revenues. *Direct expenses* are those clearly identifiable with a specific function or segment.

Governmental Fund Financial Statements

Governmental fund financial statements include a *Balance Sheet* and a *Statement of Revenues, Expenditures and Changes in Fund Balances* for the Authority's one major governmental fund. An accompanying schedule is presented to reconcile and explain the differences in fund balance as presented in these statements to the net position presented in the government-wide financial statements.

All governmental funds are accounted for on a spending or "current financial resources" measurement focus and the modified accrual basis of accounting. Accordingly, only current assets, deferred outflows of resources, current liabilities, and deferred inflows of resources are included on the balance sheets, as applicable. The *Statement of Revenues, Expenditures and Changes in Fund Balances* present increases (revenues and other financing sources) and decreases (expenditures and other financing uses) in net current assets.

Under the modified accrual basis of accounting, revenues are recognized in the accounting period in which they become both measurable and available to finance expenditures of the current period. Accordingly, revenues are recorded when received in cash, except that revenues subject to accrual (up to 60 days after year-end) are recognized when due. Expenditures are recorded in the accounting period in which the related fund liability is incurred.

Unearned revenues arise when potential revenues do not meet both the "measurable" and "available" criteria for recognition in the current period. Unearned revenues also arise when the government receives resources before it has a legal claim to them, as when grant monies are received prior to incurring qualifying expenditures. In subsequent periods when both revenue recognition criteria are met or when the government has a legal claim to the resources, the unearned revenue is removed from the combined balance sheet and revenue is recognized.

C. Cash Deposits and Investments

For the purposes of the Statement of Net Position, "cash and investments" includes all demand, savings accounts, and certificates of deposits, or short-term investments with an original maturity of three months or less.

The City has oversight responsibility for all Authority cash and investments.

The California Government Code requires California banks and savings and loan associations to secure government cash deposits by pledging securities as collateral. This Code states that collateral pledged in this manner shall have the effect of perfecting a security interest in such collateral superior to those of a general creditor. Thus, collateral is considered to be held in the government's name.

Investments are recorded at fair value in accordance with GASB Statement No. 72, *Fair Value Measurement and Application*. Accordingly, the change in fair value of investments is recognized as an increase or decrease to investment assets and investment income.

Fair value is defined as the price that would be received to sell an asset or paid to transfer a liability in an orderly transaction. In determining this amount, three valuation techniques are available:

- Market approach - This approach uses prices generated for identical or similar assets or liabilities. The most common example is an investment in a public security traded in an active exchange such as the NYSE.
- Cost approach - This technique determines the amount required to replace the current asset. This approach may be ideal for valuing donations of capital assets or historical treasures.
- Income approach - This approach converts future amounts (such as cash flows) into a current discounted amount.

Each of these valuation techniques requires inputs to calculate a fair value. Observable inputs have been maximized in fair value measures, and unobservable inputs have been minimized.

D. Deferred Outflows/Deferred Inflows

Deferred outflows of resources is a consumption of net position by the Authority that is applicable to a future reporting period; for example, prepaid items and deferred charges. Deferred inflows of resources is an acquisition of net position by the Authority that is applicable to a future reporting period; for example, advance collections or deferred gains from the early defeasance of long-term debt.

E. Interest Payable

In the government-wide financial statements, interest payable for long-term debt is recognized as an incurred liability. In the fund financial statements, governmental fund types do not recognize the interest payable when the liability is incurred. Interest on long-term debt is recorded in the fund statements when the payment is made.

F. Long-Term Debt

All long-term debt to be repaid from governmental resources is reported as liabilities in the government-wide statements. The Long-term debt consists of a bank loan from Pacific Premier Bank.

Long-term debt for governmental funds is not reported as liabilities in the fund financial statements. The debt proceeds are reported as revenue and payment of principal and interest reported as expenditures.

G. Fund Balances

In accordance with GASB Statement No. 54*, Fund Balance Reporting and Governmental Fund Type Definitions*, the Authority classifies governmental fund balances as follows:

Nonspendable
Nonspendable fund balance includes fund balance amounts that cannot be spent either because it is not in spendable form or because of legal or contractual constraints.

Restricted
Restricted fund balance includes fund balance amounts that are constrained for specific purposes which are externally imposed by providers, such as creditors or amounts constrained due to constitutional provisions or enabling legislation.

Committed
Committed fund balance includes fund balance amounts that are constrained for specific purposes that are internally imposed by the government through formal action of the highest level of decision making authority and does not lapse at year-end. Committed fund balances are imposed by the Authority's governing board.

Assigned
Assigned fund balance includes fund balance amounts that are intended to be used for specific purposes that are neither considered restricted or committed. Fund balance may be assigned by the Authority Manager.

Unassigned
The Unassigned fund balance category represents fund balance which may be held for specific types of uses or stabilization purposes, but is not yet directed to be used for a specific purpose. The detail of amounts reported for each of the above defined fund balance categories is reported in the governmental funds balance.

Flow Assumption / Spending Order Policy
When expenditures are incurred for purposes for which both restricted and unrestricted fund balances are available, the Authority considers restricted funds to be spent first. When expenditures are incurred for which committed, assigned, or unassigned fund balances are available, the Authority considers amounts to be spent first out of committed funds, then assigned funds, and finally unassigned funds, as needed, unless the Authority's governing board has directed otherwise.

H. Net Position

In the government-wide financial statements, net position is classified in the following categories:

Net Investment in Capital Assets
This amount consists of capital assets net of accumulated depreciation and reduced by outstanding debt that attributed to the acquisition, construction, or improvement of the assets. In addition, deferred outflows of resources and deferred inflows of resources that are attributable to the acquisition, construction, or improvement of those assets or related debt also are included in the net investment in capital assets component of net position. The Authority did not report any capital assets at the end of the year.

Restricted Net Position
This amount is restricted by external creditors, grantors, contributors, or laws or regulations of other governments. Certain proceeds from debt are reported as restricted net position because their use is limited by applicable debt or other covenants.

Unrestricted Net Position
This amount is all net position that does not meet the definition of "net investment in capital assets" or "restricted net position."

The detail of amounts reported for each of the above defined net position categories is reported in the government-wide Statement of Net Position.

Use of Restricted/Unrestricted Net Position

When an expense is incurred for purposes for which both restricted and unrestricted net position are available, the Authority's policy is to apply restricted net position first.

I. Budgets

Budgets are prepared on the modified accrual basis of accounting, in which debt principal and interest, and capital assets acquired are recorded as expenditures and depreciation is not recorded.

The Authority follows these procedures in establishing the budgetary data reflected in the financial statements:

1. By May 15, management recommends to the Board a proposed operating budget for the year commencing July 1. The operating budget includes proposed expenditures and the means of financing them.
2. The budget is legally enacted through passage of a motion during a Board meeting prior to the commencement of the new fiscal year.
3. The Board approves all budget transfers and revisions.
4. Formal budgeting is employed as a management control device during the year.
5. Budgets for the Debt Service Fund are adopted on a basis consistent with accounting principles generally accepted in the United States (GAAP).

Budgeted amounts are as originally adopted or as amended by the Board. There were no amendments recorded for the fiscal year.

J. Use of Estimates

The preparation of basic financial statements in conformity with generally accepted accounting principles requires management to make estimates and assumptions that affect certain reported amounts and disclosures. Accordingly, actual results could differ from those estimates.

K. Comparative Data

Comparative data for the prior year has been presented in the accompanying financial statements in order to provide an understanding of changes in the government's financial position and operations.

L. Implemented Accounting Pronouncements

GASB Statement No. 100, Accounting Changes and Error Corrections—an amendment of GASB Statement No. 62

This Statement defines accounting changes as changes in accounting principles, changes in accounting estimates, and changes to or within the financial reporting entity and describes the transactions or other events that constitute those changes. This Statement also prescribes the accounting and financial reporting for (1) each type of accounting change and (2) error corrections in previously issued financial statements. The requirements of this Statement are effective for accounting changes and error corrections made in fiscal years beginning after June 15, 2023, and all reporting periods thereafter. This statement did not have a material impact on the financial statements.

M. Upcoming Accounting and Reporting Changes

The Authority is currently analyzing its accounting practices to determine the potential impact on the financial statements of the following recent GASB Statements:

GASB Statement No. 101, Compensated Absences

This Statement requires that liabilities for compensated absences be recognized for (1) leave that has not been used and (2) leave that has been used but not yet paid in cash or settled through noncash means. A liability should be recognized for leave that has not been used if (a) the leave is attributable to services already rendered, (b) the leave accumulates, and (c) the leave is more likely than not to be used for time off or otherwise paid in cash or settled through noncash means. Leave is attributable to services already rendered when an employee has performed the services required to earn the leave. Leave that accumulates is carried forward from the reporting period in which it is earned to a future reporting period during which it may be used for time off or otherwise paid or settled. In estimating the leave that is more likely than not to be used or otherwise paid or settled, a government should consider relevant factors such as employment policies related to compensated absences and historical information about the use or payment of compensated absences. However, leave that is more likely than not to be settled through conversion to defined benefit postemployment benefits should not be included in a liability for compensated absences.

This Statement requires that a liability for certain types of compensated absences—including parental leave, military leave, and jury duty leave—not be recognized until the leave commences. This Statement also requires that a liability for specific types of compensated absences not be recognized until the leave is used. A liability for leave that has been used but not yet paid or settled should be measured at the amount of the cash payment or noncash settlement to be made. Certain salary-related payments that are directly and incrementally associated with payments for leave also should be included in the measurement of the liabilities.

The requirements of this Statement are effective for fiscal years beginning after December 15, 2023, and all reporting periods thereafter.

GASB Statement No. 102, Certain Risk Disclosures

This Statement requires a government to assess whether a concentration or constraint makes the primary government reporting unit or other reporting units that report a liability for revenue debt vulnerable to the risk of a substantial impact. Additionally, this Statement requires a government to assess whether an event or events associated with a concentration or constraint that could cause the substantial impact have occurred, have begun to occur, or are more likely than not to begin to occur within 12 months of the date the financial statements are issued.

If a government determines that those criteria for disclosure have been met for a concentration or constraint, it should disclose information in notes to financial statements in sufficient detail to enable users of financial statements to understand the nature of the circumstances disclosed and the government's vulnerability to the risk of a substantial impact. The disclosure should include descriptions for (1) the concentration or constraint (2) each event associated with the concentration or constraint that could cause a substantial impact if the event had occurred or had begun to occur prior to the issuance of the financial statements (3) actions taken by the government prior to the issuance of the financial

statements to mitigate the risk. The requirements of this Statement are effective for fiscal years beginning after June 15, 2024, and all reporting periods thereafter.

GASB Statement No. 103, Financial Reporting Model Improvements

This Statement is to improve key components of the financial reporting model to enhance its effectiveness in providing information that is essential for decision making and assessing a government's accountability.

This Statement establishes new accounting and financial reporting requirements or modifies existing requirements related to (a) Management's discussion and analysis (MD&A) (b) Unusual or infrequent items (c) Presentation of the proprietary fund statement of revenues, expenses, and changes in fund net position (d) Information about major component units in basic financial statements (5) Budgetary comparison information (6) Financial trend information in the statistical section

The requirements of this Statement are effective for fiscal years beginning after June 15, 2025, and all reporting periods thereafter.

NOTE 2 - CASH AND INVESTMENTS

As of June 30, 2024, cash and investments were reported in the financial statements as follows:

	Fair Value		Total Cash and Investments
	Unrestricted	Restricted	
Cash held with City of Rocklin	$ 7,456	$ -	$ 7,456
Bank money market accounts	-	68,364	68,364
Special assessment loan investments	-	1,029,183	1,029,183
Total cash and investments	$ 7,456	$ 1,097,547	$ 1,105,003

As of June 30, 2023, cash and investments were reported in the financial statements as follows:

	Fair Value		Total Cash and Investments
	Unrestricted	Restricted	
Cash held with City of Rocklin	$ 7,200	$ -	$ 7,200
Bank money market accounts	-	68,193	68,193
Special assessment loan investments	-	1,526,806	1,526,806
Total cash and investments	$ 7,200	$ 1,594,999	$ 1,602,199

A. Cash Deposits

The California Government Code requires California banks and savings and loan associations to secure the Authority's cash deposits by pledging securities as collateral. This Code states that collateral pledged in this manner shall have the effect of perfecting a security interest, and places the Authority ahead of general creditors of the institution.

The market value of pledged securities must equal at least 110 percent of the Authority's cash deposits. California law also allows institutions to secure Authority deposits by pledging first trust deed mortgage notes that have a value of 150 percent of the Authority's total cash deposits. The Authority has waived the collateral requirements for cash deposits which are fully insured to $250,000 by the Federal Deposit Insurance Corporation (FDIC).

B. Safekeeping

Securities purchased from broker-dealers are held in third party safekeeping by the trust department of the broker-dealer or other designated third party trust in the Authority/City's name and control, whenever possible.

C. Investment

Loans to CFD's No. 6, No. 8 and No. 9 (special assessments) are investments of the Authority. The balance as of June 30, 2024 and 2023 was $1,029,183 and 1,526,806, respectively.

D. Investment Policies

Under the provisions of the Authority's investment policy, and in accordance with California Government Code, the following investments are authorized:

Category	Standard
U.S. Treasuries	No portfolio limit; 5 years max maturity
Federal Agencies	No portfolio limit; 20% max callable federal agency securities; 30% max per institution/issuer; 5 years max maturity
Supranational Obligations	"AA" rated or better by a NRSRO; 30% portfolio max; 10% max per institution/issuer; 5 years max maturity; USD denominated senior unsecured unsubordinated obligations issued or unconditionally guaranteed by IBRD, IFC, or IADB; Eligible for purchase and sale within the U.S.
Municipal Securities (CA, Other States)	"A" rating category or better by a NRSRO; 30% portfolio max; 5% max per institution; 5 years max maturity
Corporate Medium Term Notes	"A" rating category or better by a NRSRO; 30% portfolio max; 5% max per institution/issuer; 5 years max maturity; Issued by corporations organized and operating within the U.S. or by depository institutions licensed by the U.S. or any state and operating within the U.S.
Mortgage-Backed Securities	"AA" rating category or better by a NRSRO; 20% portfolio max; 5% max per institution/issuer; 5 years max maturity; Mortgage Pass-Through Securities, Collateralized Mortgage Obligations, Asset-Backed, or Mortgage-Backed bonds
Negotiable Certificates of Deposit (NCD)	The amount invested in NCDs subject to limitations of California Government Code; Any amount above the FDIC insured limit must be issued by institutions which have short-term debt obligations rated "A-1" or better by a NRSRO; or long-term obligations rated "A" or its equivalent or better by a NRSRO; 30% portfolio max (combined with CDARS); 5% max per institution/ issuer; 5 years max maturity

Category	Standard
Time Deposits (Non-negotiable CD/TD)	20% portfolio max; Max per institution/issuer limited to maximum covered under federal insurance; 5 years max maturity; Non-negotiable time deposits FDIC or collateralized in accordance with California Government Code and the Financial Institutions Reform, Recovery, and Enforcement Act of 1989 (FIRREA)
Collateralized Bank Deposits	No portfolio limit; deposits with financial institutions will be collateralized with pledged securities per California Government Code, Section 53651
Banker's Acceptances	Short-term debt obligations "A-1" rating category or better by a NRSRO or long-term debt obligations "A" rating category or better by a NRSRO; 40% portfolio max; 5% max per institution/issuer; 180 days max maturity
Commercial Paper	Issued by domestic corporation with assets >$500 million and having an "A-1" long-term rating or better by a NRSRO or if the issuer has other debt obligations, having an "A" long-term rating or better by a NRSRO; or Issuer organized in the U.S. as a special purpose corporation, trust, or limitied liability company with program-wide credit enhancements and an "A-1" rating or better by a NRSRO; 25% portfolio max; 5% max per institution/issuer; 10% max of the outstanding paper of the issuing corporation; 270 days maturity
Money Market Mutual Funds	20% portfolio max; 20% max per shares of any one Money Market Mutual Fund; Shares of beneficial interest issued by Mutual Funds and Money Market Funds registered with SEC under the Investment Company Act of 1940; Companies shall either: (i) Attain highest rating by two NRSROs; or (ii) Have an investment adviser registered with SEC with > 5 years experience investing in securities as authorized by by California Government Code, Section 53601, inclusive and with AUM >$500 million; The purchase price of shares of Mutual Funds or Money Market Funds shall not include any commission that the companies may charge
Mutual Funds	20% portfolio max; 10% max per shares of any one mutual fund; Shares of beneficial interest issued by Mutual Funds and Money Market Funds registered with SEC under the Investment Company Act of 1940; Companies shall either: (i) Attain highest rating by two NRSROs; or (ii) Have an investment adviser registered with SEC with > 5 years experience investing in securities as authorized by California Government Code, Section 53601 and with AUM >$500 million; Mutual Funds that invest in securities and obligations as authorized under California Government Code, Section 53601 (a) to (k) and (m) to (q). The purchase price of shares of Mutual Funds or Money Market Funds shall not include any commission that the companies may charge
Local Agency Investment Fund (LAIF)	Maximum amount permitted by State law and LAIF
Local Government Investment Pools	25% portfolio max in the Placer County Treasurer's Investment Pool
Repurchase Agreements	No portfolio limit; 1 year max maturity; 102% collateralized; Securities used as collateral for Repurchase Agreements will be delivered to an acceptable third-party custodian; Repurchase agreements are subject to a Master Repurchase Agreement (in the form developed by SIFMA) between the City and the provider of the repurchase agreement

E. Risk Disclosures

Interest Rate Risk

Interest rate risk is the risk that changes in market interest rates will adversely affect the fair value of an investment. Generally, the longer the term of an investment's maturity, the greater the sensitivity to changes in market interest rates.

Credit Risk
Generally, credit risk is the risk that an issuer of an investment will not fulfill its obligation to the holder of an investment. This is measured by the assignment of a rating by a nationally recognized statistical rating organization. As of June 30, 2024 and 2023, the Authority's investments were in compliance with the ratings required by the Authority's investment policy, indenture agreements and Government Code.

Concentrations of Credit Risk
The investment policy of the Authority contains no limitations on the amount that can be invested in any one issuer beyond that stipulated by the California Government Code. As of June 30, 2024 and 2023, the Authority invested 1% of its cash in money market accounts with Pacific Premier Bank and 99% in special assessment debt.

Custodial Credit Risk
For an investment, custodial credit risk is the risk that, in the event of the failure of the counterparty, the Authority will not be able to recover the value of its investments or collateral securities that are in the possession of an outside party. The California Government Code and the Authority's investment policy do not contain legal or policy requirements that would limit the exposure to custodial credit risk for investments. With respect to investments, custodial credit risk generally applies only to direct investments in marketable securities. Custodial credit risk does not apply to a local government's indirect investment in securities through the use of mutual funds or government investment pools.

F. Fair Value Measurements

GASB 72 established a hierarchy of inputs to the valuation techniques above. This hierarchy has three levels:

- Level 1 inputs are quoted prices in active markets for identical assets or liabilities.
- Level 2 inputs are quoted market prices for similar assets or liabilities, quoted prices for identical or similar assets or liabilities in markets that are not active, or other than quoted prices that are not observable.
- Level 3 inputs are unobservable inputs, such as a property valuation or an appraisal.

Money market accounts were valued using Level 2 inputs and special assessment bonds were valued using Level 1 inputs.

NOTE 3 - NONCURRENT LIABILTIIES

The Authority's changes in noncurrent liabilities were as follows for the year ended June 30, 2024:

Description	Beginning Balance	Additions	Deletions	Ending Balance	Due Within One Year
Direct Borrowing:					
Pacific Premier Bank Loan - RPFA Refunding	$ 1,526,806	$ -	$ 497,623	$ 1,029,183	$ 508,181

The Authority's changes in noncurrent liabilities were as follows for the year ended June 30, 2023:

Description	Beginning Balance	Additions	Deletions	Ending Balance	Due Within One Year
Direct Borrowing:					
Pacific Premier Bank Loan - RPFA Refunding	$ 2,013,154	$ -	$ 486,348	$ 1,526,806	$ 497,623

Rocklin Public Finance Authority Bank Loan
On July 1, 2017, the City, on behalf of Community Facilities Districts (CFD) 6, 8 and 9, agreed to borrow from the Rocklin Public Financing Authority (Authority) an amount necessary to refund 1999 CFD special tax bonds and pledged the special tax revenues levied in each CFD to the Authority. In the 2017 Special Tax Revenue Refunding Loan Agreement, the Authority agrees to borrow from Bank, the funds necessary to refund the 1999 CFD special tax bonds and in turn, refund the Authority's 2003 refunding revenue bonds. The Bank loan is secured by a pledge of the revenues received by the Authority from the 2017 CFD loan payments. Bank has no remedy against the City if special taxpayers in the CFD's fail to make their payments. The loan was $5,000,077 at a fixed interest rate of 2.2% and matures on September 1, 2025. This loan was reported as City debt as required by GASB 62 and NCGA Statement 5. The refunding resulted in an economic gain of $1,989,923, which will be amortized over the life of the loan.

The annual debt service requirements for long-term debt was as follows:

Year Ending June 30,	Principal	Interest	Total
2025	$ 508,181	$ 17,052	$ 525,233
2026	521,002	5,731	526,733
Total	$ 1,029,183	$ 22,783	$ 1,051,966

NOTE 4 - COMMITMENTS AND CONTINGENCIES

Lawsuits
The Authority could be exposed to certain matters of litigation that arise in the normal course of conducting Authority business. Management believes, based upon consultation with the Authority Attorney, that any cases, in the aggregate, would not be expected to result in a material adverse financial impact on the Authority.

OTHER INDEPENDENT AUDITOR'S REPORTS

This page intentionally left blank

Chavan and Associates, llp
Certified Public Accountants

INDEPENDENT AUDITOR'S REPORT ON INTERNAL CONTROL OVER FINANCIAL REPORTING AND ON COMPLIANCE AND OTHER MATTERS BASED ON AN AUDIT OF FINANCIAL STATEMENTS PERFORMED IN ACCORDANCE WITH *GOVERNMENT AUDITING STANDARDS*

To the Board of Directors of the
Rocklin Public Financing Authority
Rocklin, California

We have audited, in accordance with auditing standards generally accepted in the United States of America and the standards applicable to financial audits contained in *Government Auditing Standards* issued by the Comptroller General of the United States, the financial statements of the Rocklin Public Financing Authority (the "Authority") as of and for the year ended June 30, 2024 and 2023, and the related notes to the financial statements, which collectively comprise the Authority's basic financial statements, and have issued our report thereon dated November 18, 2024.

Internal Control over Financial Reporting

Management is responsible for establishing and maintaining effective internal control over financial reporting. In planning and performing our audit of the financial statements, we considered the Authority's internal control over financial reporting (internal control) to determine the audit procedures that are appropriate in the circumstances for the purpose of expressing our opinions on the financial statements, but not for the purpose of expressing an opinion on the effectiveness of the Authority's internal control. Accordingly, we do not express an opinion on the effectiveness of the Authority's internal control.

A *deficiency in internal control* exists when the design or operation of a control does not allow management or employees in the normal course of performing their assigned functions, to prevent, or detect and correct misstatements on a timely basis. A *material weakness* is a deficiency, or a combination of deficiencies, in internal control, such that there is a reasonable possibility that a material misstatement of the entity's financial statements will not be prevented or detected and corrected on a timely basis. A *significant deficiency* is a deficiency, or a combination of deficiencies, in internal control that is less severe than a material weakness, yet important enough to merit attention by those charged with governance.

Our consideration of internal control over financial reporting was for the limited purpose described in the first paragraph of this section and was not designed to identify all deficiencies in internal control over financial reporting that might be material weaknesses or significant deficiencies. Given these limitations, during our audit we did not identify any deficiencies in internal control over financial reporting that we consider to be material weaknesses. However, material weaknesses and significant deficiencies may exist that were not identified.

Compliance and Other Matters

As part of obtaining reasonable assurance about whether the Authority's financial statements are free of material misstatement, we performed tests of its compliance with certain provisions of laws, regulations, contracts, and grant agreements, noncompliance with which could have a direct and material effect on the determination of financial statement amounts. However, providing an opinion

16450 Monterey Road #5, Morgan Hill, CA 95037
Tel: 408-217-8749 • E-Fax: 408-872-4159
info@cnallp.com • www.cnallp.com

on compliance with those provisions was not an objective of our audit, and accordingly, we do not express such an opinion. The results of our tests disclosed no instances of noncompliance or other matters that are required to be reported under *Government Auditing Standards*.

Purpose of this Report

The purpose of this report is solely to describe the scope of our testing of internal control and compliance and the results of that testing, and not to provide an opinion on the effectiveness of the entity's internal control or on compliance. This report is an integral part of an audit performed in accordance with *Government Auditing Standards* in considering the entity's internal control and compliance. Accordingly, this communication is not suitable for any other purpose.

C & A LLP

November 18, 2024
Morgan Hill, California

16450 Monterey Road #5, Morgan Hill, CA 95037
Tel: 408-217-8749 • E-Fax: 408-872-4159
info@cnallp.com • www.cnallp.com

ROCKLIN
CALIFORNIA

City Council Staff Report

Subject: Community Development Block Grant (CDBG) 2025-2029 Consolidated Plan - Discussion of Priority Needs and Goals

Date: February 25, 2025

Submitted By: Gabrielle de Farcy, Associate Management Analyst
Elizabeth Sorg, Management Analyst
Andrew Keys, Assistant City Manager

Department: City Manager's Office

Recommendation:
Receive a Presentation on the Community Development Block Grant (CDBG) 2025-2029 Consolidated Plan Proposed Priority Needs and Goals, and Provide Feedback to Staff.

Background:
The Community Development Block Grant (CDBG) program is administered by the federal Department of Housing and Urban Development (HUD) and provides funding to states, cities and counties to develop viable urban communities by providing decent housing and a suitable living environment, and by expanding economic opportunities, principally for low- and moderate-income persons. CDBG funded activities must demonstrate that they meet one or more of the following CDBG National Objectives:

- Low- and Moderate-Income Benefit: provides a benefit to low- and moderate- income persons;
- Slum and/or Blight Benefit: Aids in the prevention or elimination of slums or blight; and
- Urgent Need: Addresses an unexpected need having a particular urgency (such as flood, fire, or earthquake).

Under the CDBG program, the City of Rocklin is an entitlement community and annually receives CDBG funding on a formula basis. To be eligible to receive CDBG funds, the City must complete a Consolidated Plan every five years and an Action Plan on an annual basis. The Consolidated Plan is a comprehensive planning document that serves as a guide for the use of CDBG funding during the five-year plan period. Each year, the Annual Action Plan establishes annual CDBG funding allocations and goals.

The CDBG program operates under income limits established annually by HUD. CDBG funded activities must primarily benefit low- and moderate-income households defined as persons from households at or below 80% of Area Median Income (AMI), adjusted for family size. The City is a part of the Sacramento-Roseville-Arden-Arcade, CA Metropolitan Statistical

Area (MSA) and the CDBG program uses the following income limits to determine project eligibility.

Sacramento/Roseville/Arden Arcade CA MSA
2024 HUD Low- and Moderate-Income Limits

Household Size	Extremely Low-Income (30% of AMI)	Very Low-Income (50% of AMI)	Low- and Moderate-Income (80% of AMI)
1 Persons	$24,750	$41,300	$66,050
2 Persons	$28,300	$47,150	$75,450
3 Persons	$31,850	$53,050	$84,900
4 Persons	$35,350	$58,950	$94,300
5 Persons	$38,200	$63,650	$101,850
6 Persons	$41,050	$68,400	$109,400
7 Persons	$43,850	$73,100	$116,950
8 Persons	$46,700	$77,850	$124,500

Effective May 1, 2024

The five-year Consolidated Plan analyzes community needs, market conditions, and existing funding sources to develop strategies for the use of CDBG funds. Based on prior years' awards, it is estimated that the City will receive approximately $280,000 per year, or a total of $1,400,000 in CDBG funds over the Consolidated Plan period. The City is limited by CDBG regulation to spending no more than 15% of annual funding for public services and no more than 20% for administration of the CDBG program.

The Consolidated Planning process included the distribution of an online community needs survey, public meetings held on November 5, November 13, and December 5, 2024, as well as consultations with local service providers. The survey and the meetings were noticed on the City's website, in the Placer Herald, through social media, and by email to interested parties and stakeholders. Stakeholders included nonprofit organizations, affordable housing providers, service providers, government agencies, and advocacy organizations, all of whom work with low- and moderate-income members of the community. Service providers were also asked to complete questionnaires regarding the specific needs of their clients. The Roseville and Placer County Housing Authorities provided information regarding the families they serve, and the Roseville/Rocklin/Placer Continuum of Care provided information regarding persons at risk of, or experiencing, homelessness in the City. The Consolidated Plan includes an analysis of data from the U.S. Census American Community Survey (ACS) and other relevant information regarding the needs of low- and moderate-income residents. Information from the City's 2021-2029 Housing Element is also reflected in the Plan.

Once the draft five-year Consolidated Plan and Annual Action Plan are completed, they will be made available for public comment for a minimum of 30 days prior to the City Council public hearing.

Draft Consolidated Plan Priority Needs

The Consolidated Plan must identify "High Priority Needs" and "Low Priority Needs" for the next five years. The City receives a limited amount of CDBG funding each year and the

recommended Priority Needs take into consideration available funding and other resources that may be available to address needs, as well as the public comment and information received from the outreach efforts described. The following Priority Needs are recommended for inclusion in the Consolidated Plan:

High Priority Needs

- Services for low- and moderate-income youth, seniors and those providing food and nutrition services. These services were identified as priority concerns during Public Community Meetings, by respondents to the Community Needs Survey and through consultation with local service providers. The census ACS indicates that Rocklin is home to 1,903 low- and moderate-income households with children and 7,950 low- and moderate-income households with a member age 62 or older.
- Addressing housing instability. Housing instability was identified as a high priority need during Public Community Meetings, by respondents to the Community Needs Survey and through consultation with local service providers. The census ACS estimates that there are 2,190 low- and moderate-income households paying in excess of 50% of household income towards housing costs, which indicates they are at imminent risk of homelessness. The 2024 Placer County Point-in-Time Homeless Count found 39 homeless individuals living in the City.
- Services for survivors of domestic violence, sexual assault or trafficking . Services for these individuals were identified as a high priority need through consultation with local service providers. Many noted that these experiences can lead to mental health issues, substance use issues, loss of income and housing instability.

Low Priority Needs

- Homeowner housing rehabilitation. Rehabilitation assistance for lower-income homeowners was noted as a need by respondents of the Community Needs Survey, especially for improving accessibility for seniors and persons with disabilities. The first goal in the 2021-2029 Rocklin Housing Element is to maintain and improve the quality of existing housing and residential neighborhoods. The census ACS identifies 1,135 low- and moderate-income homeowner households in Rocklin.
- Public infrastructure accessibility/safety. Infrastructure Improvements for Lower--Income Neighborhoods was noted as a high need by respondents of the Community Needs Survey. The Public Works Department has identified barriers to pedestrian safety and accessibility located in census tracts and census block groups that are eligible for CDBG funding based on the percentage of low- and moderate-income residents.
- Support economic opportunity. Assistance to low- and moderate-income microenterprise business owners was noted as a priority need during Public Community meetings and employment assistance was identified as a high need in the Community Needs Survey.

Draft Consolidated Plan Goals

The Consolidated Plan must identify goals that address the Priority Needs over the five-year planning period. Recommended goals are:

Goal	Estimated Five-Year Funding	Outcome Indicator
Provide services to meet the needs of low- and moderate-income seniors	$30,000	300 seniors assisted
Provide services and shelter to survivors of domestic violence, sexual assault and trafficking situations.	$30,000	50 persons assisted
Provide services to meet the needs of low- and moderate-income youth and families with children.	$40,000	30 youth assisted
Provide meal delivery for seniors and persons with disabilities, and provide access to food and nutrition services for low- and moderate-income households.	$50,000	300 low- and moderate-income persons assisted
Provide services to vulnerable households to reduce housing instability and the risk of homelessness. Provide assistance to persons experiencing homelessness to move toward housing stability.	$60,000	200 persons at risk or experiencing homelessness assisted
Provide financial and technical assistance to low- and moderate-income homeowners to complete accessibility improvements and/or rehabilitation. Support aging in place for elderly households and accessibility for persons with mobility impairment.	$300,000	6 homeowner housing units adapted for accessibility or rehabilitated
Improve streets and sidewalks in low- and moderate-income neighborhoods to enhance pedestrian safety and reduce architectural barriers for persons with mobility impairments.	$530,000	1,000 residents of low- and moderate-income neighborhoods assisted

Provide financial and/or technical assistance support to low- and moderate-income microenterprise business owners to improve their earning capacity. Provide financial support to businesses that create and/or retain jobs for low- and moderate-income persons. Support programs that provide job readiness skills for low- and moderate-income youth and underemployed adults.	$100,000	5 businesses assisted 30 persons provided job readiness skills

Funding and outcome indicators are based on prior years' allocations as well as the fact that CDBG funding is limited to spending no more than 15% of annual funding for public services.

All CDBG funded activities for years 2025 through 2029 must be consistent with the Priority Needs and Goals established in the 2025-2029 Consolidated Plan and comply with all HUD regulations governing the program. The 2025-2026 Annual Action Plan will identify the specific activities the City will undertake during the Program Year and subsequent Action Plans will be adopted for each respective year of the Consolidated Plan. As of the date of this report, HUD has not announced allocations for 2025, but recent allocations have been approximately $280,000 per year.

Eligible subrecipients that have requested funding for the 2025-2026 Program Year would need to meet one or more of the recommended Priority Needs and Goals in the 2025-2029 Consolidated Plan. The City received applications for 2025-2026 CDBG funding from December 13, 2024 through January 24, 2025. Eight applications were received requesting a total of $181,500. Staff are currently reviewing applications to determine eligibility and amount of funding to be recommended.

Next Steps
Staff will incorporate the feedback and funding recommendations received during the February 25, 2025 City Council discussion into the Annual Action Plan that will be made available for public comment for a minimum of 30 days prior to the City Council public hearing and adoption in time for submission to HUD by the May 15, 2025 deadline. Agreements with all subrecipients will specify that Rocklin funds must be utilized to assist Rocklin residents.

Fiscal Impact:
There is no impact to the General Fund to approve staff's recommendations. Approving the 2025-2029 Consolidated Plan is necessary in order for the City to receive CDBG Entitlement Funds from HUD and CDBG funding will be included in the City's proposed FY 2025-2027 Budget.

ROCKLIN
CALIFORNIA

City Council Staff Report

Subject: Fiscal Year 2024/25 Second Quarter: Financial Report and Strategic Plan Update

Date: February 25, 2025

Submitted By: Zonousia Lee, Budget Officer
Daniel Choe, Administrative Services Deputy Director

Department: Administrative Services - Finance

Recommendation:

A. Adopt a Resolution of the City Council of the City of Rocklin Accepting the Quarterly Financial Reports for the Quarter Ended December 31, 2024, and Amending the Fiscal Year 2024/25 Operating Budget.
B. Receive an Update on the 2023-2025 Strategic Plan Regarding Progress Made on the Work Plan for the Quarter Ended December 31, 2024.

Background:

Fiscal Year (FY) 2024/25 Second Quarter Financial Report

The quarterly financial report (Attachment 2) provides an overview of the City of Rocklin's current financial position. The City's departments and the Finance Division evaluate budget-to-actual performance to ensure fiscal stability, identify potential concerns, recommend necessary adjustments, and implement operational changes as required. This process ensures that the City remains financially sound while proactively addressing any emerging issues.

Other FY 2024/25 Second Quarter Adjustments

During the quarterly financial review, staff identified necessary adjustments to the FY 2024/25 Operating Budget to ensure alignment with staffing needs and budgetary requirements. The budget amendments are detailed in Exhibit B to the Resolution (Attachment 3).

FY 2023/24 General Fund Excess Resources

Following the completion of the annual financial audit, staff identified a one-time General Fund surplus of approximately $7.89 million for Fiscal Year (FY) 2023/24, primarily due to higher-than-budgeted revenues, such as sales tax and interest earnings, coupled with operational savings resulting primarily from vacant positions.

Each year, as part of the budget adoption process, the City Council reaffirms the Key Management Practices (KMP), which outlines the reserve policy and provide guidance on how surplus fund should be allocated. In accordance with the reserve policy, 5% of the current fiscal year's General Fund revenue budget is automatically allocated to City reserves without further City Council approval. The remaining surplus may be used for one-time expenditures and startup costs for new programs or projects, subject to City Council approval.

General Fund Reserve: $3.34 million

Consistent with the KMP and to ensure the City maintains adequate financial reserves, $3.34 million or 5% of the General Fund revenue budget will be allocated to various reserve funds as follows:

- Building Reserve: $750,000
- Park Infrastructure Reserve: $750,000
- Economic Reserve: $500,000
- Fleet Capital Reserve: $1.34 million

These allocations will strengthen the City's financial position by reinforcing critical reserves that support infrastructure, economic stability, and capital needs.

Recommended Use of General Fund Surplus: $4.55 million

After careful consideration, staff recommends using the remaining $4.55 million to support City Council priorities and enhance core City services. The proposed allocations, detailed in Attachment 4, are identified as follows:

- Amphitheater Upgrades: $250,000
- CAD to CAD: $150,000
- Clover Valley: $2.0 million
- Corporation Yard Generator: $200,000
- Facilities Assessment: $250,000
- Fleet Parking Lot: $200,000
- In Lieu/Inclusionary Housing Fee Study: $150,000
- Northwest Community Parks Master Plan: $300,000
- Professional Development: $150,000
- Public Safety Communications Upgrade: $500,000
- Public Works Organizational Assessment: $75,000
- Shade Sails: $145,568
- User Fee Study: $75,000
- Website Refresh: $100,000

In addition to the General Fund allocations, staff recommends that the City Council authorize the redirection of $1 million originally allocated to fund IRS Section 115 trust retirees health to the pension trust. In 2014, the City established an irrevocable trust under IRS Section 115 to prefund retiree health costs and ensure the long-term stability of these obligations. With the retiree health trust projected to be fully funded by the end of the current fiscal year, reallocating these funds to the pension trust, established in 2023, provides an opportunity to address pension liabilities in a financially prudent manner. This redirection aligns with the City's ongoing efforts to manage long-term obligations and maintain fiscal responsibility.

The proposed allocations and commitments align with the City's strategic priorities, ensuring financial stability, public safety enhancements, infrastructure improvements, and high-quality community services. Staff recommends that the City Council approve the proposed allocations as outlined in this report and budget amendments reflected in Attachment 3.

2023-2025 Strategic Plan Update

On May 9, 2023, the City Council endorsed the results of the 2023-2025 Strategic Plan along with the accompanying Two-Year Work Plan. These documents were created through a collaborative effort between the City Council and City staff, following a Strategic Planning workshop held on March 22, 2023. The plan revolves around five strategic outcomes, or "Pillars," each supported by guiding directional statements that inform the development of the Two-Year Work Plan.

Spanning from July 1, 2023, to June 30, 2025, the Two-Year Work Plan outlines specific projects and programs that align with these strategic priorities. Identified as key focus areas, these initiatives are supported by allocated resources to ensure progress over the during the plan's current lifespan.

The attached Strategic Plan Program Update (Attachment 5) offers a detailed summary of the progress made on the Work Plan from October – December 2024. This update tracks staff-recommended and City Council-approved initiatives, showcasing advancements across the five strategic pillars. This update serves as a snapshot of ongoing efforts under the 2023-2025 Strategic Plan. Staff remain dedicated to advancing the strategic goals and working towards realizing the City's vision for the future.

Fiscal Impact:

Sufficient funds are available in their respective funds in FY 2024/25 Operating Budget to support the staff recommendations.

ATTACHMENTS:

1. Resolution
2. Resolution Exhibit A - FY25 Second Quarter Financial Report
3. Resolution Exhibit B - Budget Amendments
4. FY 2023/24 Year End Excess Resources - Funding Recommendations
5. 2023-2025 Strategic Plan Update (October - December 2024)

RESOLUTION NO. 2025-

RESOLUTION OF THE CITY COUNCIL OF THE CITY OF ROCKLIN
ACCEPTING THE QUARTERLY FINANCIAL REPORT
FOR THE QUARTER ENDED DECEMBER 31, 2024, AND
AMENDING THE FISCAL YEAR 2024/25 OPERATING BUDGET

WHEREAS, the quarterly financial report provides an overview of the City of Rocklin's current financial position, and in connection therewith, City departments with the Finance division evaluate budget-to-actual performance for fiscal soundness or potential issues requiring immediate actions, recommend any necessary mitigating plan, if needed, and to make operational changes as required. The Quarterly Financial Report for the quarter ended December 31, 2024 is attached hereto as Exhibit A; and

WHEREAS, with the completion of the annual financial audit, excess General Fund resources from fiscal year 2023/24 have been identified, and committing these resources necessitates a budget amendment; and

WHEREAS, as part of this review, staff has identified areas requiring operational changes, along with necessary budget amendments based on appropriations previously approved by the City Council for the fiscal year 2024/25 budget to date.

NOW, THEREFORE, the City Council of the City of Rocklin does resolve as follows:

Section 1. The City Council of the City of Rocklin accepts the Quarterly Financial Report for the quarter ended December 31, 2024 as reflected in Exhibit "A," attached hereto and incorporated herewith by reference.

Section 2. The FY 2024/25 Operating Budget is amended as outlined in Exhibit "B," attached hereto and incorporated herewith by reference.

PASSED AND ADOPTED this 25th day of February 2025, by the following vote:

AYES: Councilmembers:
NOES: Councilmembers:
ABSENT: Councilmembers:
ABSTAIN: Councilmembers:

_____
Jill Gayaldo, Mayor

ATTEST:

_____
Avinta Singh, City Clerk

Fiscal Year 2024/25 Quarterly Financial Report
For the Quarter Ended December 31, 2024

The quarterly financial report provides an overview of the City of Rocklin's (City) current financial position. The City departments and the Administrative Services - Finance Division evaluate budget-to-actual performance for fiscal soundness or potential issues requiring immediate action, any necessary mitigating plans, or operational changes required.

On June 25, 2024, the City Council adopted Resolution No. 2024-174 approving the FY 2024/25 Budget, totaling $115 million for operations and capital improvements for all funds, and $66.9 million in the General Fund. Year-to-date expenditure budget through December 31, 2024 is $75.8 million, as amended. This reflects the City Council approved budget amendments and carryforward funds from fiscal year (FY) 2023/24 to support projects, grants, and equipment purchases continued from the prior year.

Economic Development Update

Labor Market Data

The City of Rocklin's unemployment rate was at 3.7% in December of 2024, with a labor force of 35,600 and employment at 34,200. The unemployment rate in the Sacramento--Roseville--Arden-Arcade MSA was 4.6% in December 2024, which remain unchanged from the prior year. This compares with an unadjusted unemployment rate of 5.2% for California and 3.8% for the nation during the same period. The unemployment rate was 4.3% in El Dorado County, 4.0% in Placer County, 4.7% in Sacramento County, and 5.3% in Yolo County.

Between December 2023 and December 2024, total jobs in the region increased by 11,500 or 1.0%.

- Private education and health services sector continue to lead in job growth, adding 13,400 jobs. Specifically, healthcare and social assistance contributed 13,100 jobs, while private educational services accounted for an additional 300 jobs.
- Government jobs increased by 3,700 jobs year over year, with gains distributed across local government (up 3,200 jobs) and state government (up 700 jobs), while the federal government saw a decrease of 200 jobs.
- In the same period, professional and business services added 500 jobs, the administrative and support and waste services added 600 jobs, while management of companies and enterprises lost 100 jobs.
- While some industries added jobs, others reported declines. Construction lost 3,400 jobs, manufacturing lost 1,100 jobs, and financial services lost 1,100 jobs.

Between November 2024 and December 2024, combined employment in the counties of El Dorado, Placer, Sacramento, and Yolo increased by 1,100 to total 1,115,900 jobs.

- The leisure and hospitality industry added 600 jobs and the arts, entertainment, and recreation added 800 jobs.
- Trade, transportation, and utilities experienced a seasonal gain in December adding 1,600 jobs.
- After experiencing job losses for three consecutive months, the other services sector recovered adding 400 jobs in December.
- In contrast, the industries the government sector lost 1,300 jobs from November to December. This includes a decrease of 700 jobs in State government and a decrease 600 jobs in local government, while federal government employment remained unchanged.

Residential Real Estate

Between December 2023 and December 2024, the median home price for detached single-family residential properties in Rocklin increased by 6.5%, increasing from $635,000 to $676,000. This also reflected a 4.2% increase in comparison to the previous quarter, indicating an ongoing upward trend. In addition, homes were selling faster, as the average days properties spent on the market decreased. In December 2024, the average days on the market were 39, representing a 13.3% reduction compared to 45 days in December of 2023. These indicators confirm that December 2024 remained a seller's market.

General Fund Revenues

The following chart reflects the current fiscal year's budget-to-actual revenue received through December 31, 2024, and the comparative budget-to-actual revenues from the prior year for the same period.

General Fund Revenue Summary
For the Quarter Ended December 31, 2024

Revenue Category	Revised Budget FY 2023/24	Revenues through 12/31/2023	% Received FY 2023/24	Revised Budget FY 2024/25	Revenges through 12/31/2024	% Received FY 2024/25
Property Tax	24,006,800	323,050	1.3%	25,213,600	342,988	1.4%
Sales and Use Tax	20,737,300	7,179,782	34.6%	20,024,200	7,390,585	36.9%
Transient Occupancy Tax	1,338,000	376,733	28.2%	1,018,000	460,908	45.3%
Building Permits	3,515,300	1,341,365	38.2%	3,881,900	1,732,602	44.6%
Franchise	2,465,100	476,657	19.3%	2,802,900	466,418	16.6%
Other Revenues	13,639,200	6,778,644	49.7%	13,811,199	6,736,127	48.8%
Total	**$ 65,701,700**	**$ 16,476,232**	**25.1%**	**$ 66,751,799**	**$ 17,129,628**	**25.7%**

General Fund operating revenues are within budgetary expectations as of December 31, 2024. Year-to-date through December 31, the City's General Fund revenue is $17 million, which is 25.5% of General Fund total resources. Revenues collected through the second quarter is consistent with prior years, as the first property tax revenue will be received in January 2025.

Property Tax. Property taxes are the largest General Fund revenue source, accounting for approximately 38% of all General Fund revenues. Property taxes fluctuate based on real estate market conditions, new construction activity, and adjustments to the tax roll. The majority of property tax revenues are received in January and May and update will be included in the third quarter financial report.

Sales and Use Tax. Sales and use taxes make up approximately 30% of General Fund revenues. Sales tax is imposed on the total retail price of any tangible personal property and the use or storage of such property. Year-to-date through December 31, sales tax revenues are $7.4 million (36.9% of budget), compared to $7.2 million (34.6% of budget) from the prior year. This increase reflects moderate growth in sectors such as restaurants and hotels, although challenges remain due to rising labor and food costs. However, the fuel and consumer goods sector experienced a decline, driven by decreased consumption, increased inflation, and changing consumer behavior. The overall outlook remains uncertain, as economic trends suggest a slower recovery. Interest rates remain high, labor markets are showing signs of strain, a continued shift toward online shopping impacts direct tax allocations across segments, and budget-conscious spending has led to fewer visits to fine dining establishments and leisure-entertainment activities. Given the volatility of sales tax revenue, staff will closely monitor sales tax revenues for signs of above or below budget performance.

Transient Occupancy Tax. Transient occupancy taxes (TOT) make up only 1.5% of General Fund revenues. This tax is imposed on guest as part of their room rates and is collected by the lodging provided on behalf of the City. TOT authorized by the City of Rocklin Municipal Code 5.24 and under State Revenue and Taxation Code Section 7280, as an additional source of non-property tax revenue to local government. The tax is applied once a guest is charged rent by an operator for lodging purposes at a rate of ten percent (10%) as of January 1, 2023. Year-to-date through December 31, TOT revenues are $460,908 (45.3% of budget), compared to $376,733 (28.2% of budget) from the prior year. At this time, TOT revenue appears to be on track to meet budget.

Building Permits. Year-to-date building permit revenue through December 31, is $1.7 million (44.6% of budget), compared to $1.3 million (38.2% of budget) one year ago, reflecting an increase of approximately 30.7% from the prior year. Over the past two years, building permit activity has experienced a slight decline. Although building activities typically slow during the winter months due to weather conditions, there has been a moderate increase in activity, leading to higher permit revenues compared to the previous year. The increase seen in November and December is largely attributed to the commercial permit issued for the Nugget Market on Whitney Ranch and new single-family homes. While the City is nearing build-out in single-family residential areas, building activity related to alterations of existing single-family homes remains optimistic. Staff will continue to closely monitor performance and make adjustments as needed to stay on track with budget expectations.

Franchise Tax. Franchise tax includes fees from gas, electric, garbage, and telecommunication services. Year-to-date revenue through December 31, is $466,418 (16.6% of budget), compared to $476,657 (19.3% of budget). At this time, franchise tax appears to be on track to meet budget.

Other Revenues. Other General Fund Revenues through December 31, 2024, total $6.7 million (48.8% of budget) compared to $6.8 million (49.7% of budget) one year ago.

Staff will continue to monitor all revenue sources and provide updates in these quarterly reports.

Department Revenues and Expenditures

The following charts reflect comparative budget to actual information for the General Fund departments.

General Fund Department Revenue Summary
For the Quarter Ended December 31, 2024

Revenue Category	Revised Budget FY 2023/24	Revenues through 12/31/2023	% Received FY 2023/24	Revised Budget FY 2024/25	Revenges through 12/31/2024	% Received FY 2024/25
City Manager	125,000	-	0.0%	166,500	-	0.0%
Community Development	4,741,300	1,942,814	41.0%	5,179,000	2,738,622	52.9%
Fire	2,819,500	313,126	11.1%	3,028,000	415,846	13.7%
Parks & Recreation	2,479,000	1,030,312	41.6%	2,564,500	952,745	37.2%
Police	1,564,800	429,163	27.4%	1,660,499	392,561	23.6%
Public Works	245,200	132,903	54.2%	200,500	118,429	59.1%
Total	**$ 11,974,800**	**$ 3,848,317**	**32.1%**	**$ 12,798,999**	**$ 4,618,203**	**36.1%**

Year-to-date General Fund department revenues through December 31, 2024 is $4.6 million (36.1% of budget) compared to $3.8 million (32.1 % of budget) one year ago. At this time, department revenues appear to be in line with the budget.

General Fund Department Expenditure Summary
For the Quarter Ended December 31, 2024

Department	Revised Budget FY 2023/24	Expended through 12/31/2023	% Expended FY 2023/24	Revised Budget FY 2024/25	Expended through 12/31/2024	% Expended FY 2024/25
City Council	99,400	30,573	30.8%	120,500	44,664	37.1%
City Manager	2,810,058	552,270	19.7%	3,175,198	1,095,769	34.5%
City Attorney	1,429,617	377,577	26.4%	1,160,050	669,563	57.7%
City Clerk	329,000	96,532	29.3%	425,127	146,294	34.4%
Administrative Services	6,150,891	2,407,843	39.1%	6,765,537	2,618,408	38.7%
Community Development	6,446,715	1,944,232	30.2%	6,931,341	2,156,442	31.1%
Fire	16,047,149	6,987,537	43.5%	14,425,680	5,797,747	40.2%
Parks & Recreation	9,639,908	2,695,925	28.0%	9,598,496	2,943,311	30.7%
Police	24,864,197	10,335,315	41.6%	25,528,403	9,287,153	36.4%
Public Works	5,661,658	5,661,658	100.0%	4,707,410	1,532,652	32.6%
Non Departmental	4,523,350	253,200	5.6%	2,921,200	3,327	0.1%
Total	**$ 78,001,943**	**$ 31,342,662**	**40.2%**	**$ 75,758,942**	**$ 26,295,330**	**34.7%**

Departments have expended approximately 34.7% of their total budget in the General Fund for FY 2024/25. Expenditures are generally incurred as needs arise and not equally throughout the year. As of December 31, 2024, both revenues and expenditures are within budgetary expectations.

Staff will continue to monitor and return to the City Council with the FY 2024/25 Third Quarter Financial Report in June 2025.

Changes in Fund Balance			
Fund Name (No.)		**Net Change**	**Description**
General Fund (100)	$	1,670,568	Adjust fund balance to reflect fund balance commitments and net budget appropriations previously approved by the City Council. Commitments include: + Amphitheater Upgrade: $250,000 + CAD to CAD: $150,000 + Fleet Parking Lot: $200,000 + Facilities Assessment: $250,000 + Public Safety Communications Upgrade: $500,000 + Public Works Organizational Assessment: $75,000 + Shade Sails: $145,568 + Website Refresh: $100,000
Building Reserve (180)	$	750,000	Adjust fund balance to reflect fund balance commitments.
Economic Development Reserve (122)	$	500,000	Adjust fund balance to reflect fund balance commitments.
Low Mod Income Housing Asset (270)	$	(12,500)	Reduce fund balance in support of homeless prevention and rapid rehousing.
Parks Infrastructure Reserve (170)	$	750,000	Adjust fund balance to reflect fund balance commitments.
Retirees' Health (151)	$	(1,000,000)	Reduce fund balance in support of pension trust.
Vehicle Fleet Management (500)	$	1,340,000	Adjust fund balance to reflect fund balance commitments.

Budget Adjustments						
Department	**Fund Name (No.)**	**FTE**		**Revenue/ Reimbursement Adjustments**		**Expenditure Adjustments**	**Description**
General Fund							
Administrative Services	General Fund (100)	-	$	-	$	150,000	Funding for the professional development for City employees with the FY 2023/24 GF surplus.
Administrative Services	General Fund (100)	-	$	-	$	75,000	Funding for the user fee study with the FY 2023/24 GF surplus.
City Manager	General Fund (100)	-	$	-	$	150,000	Funding for the In-lieu/inclusionary housing fee study with the FY 2023/24 GF surplus.
Non-Departmental	General Fund (100)	-	$	7,885,568	$	-	Fiscal Year (FY) 2023/24 General Fund (GF) surplus.
Non-Departmental	General Fund (100)	-	$	-	$	750,000	Building Reserve allocation with the FY 2023/24 GF surplus.
Non-Departmental	General Fund (100)	-	$	-	$	750,000	Park Infrastructure Reserve allocation with the FY 2023/24 GF surplus.
Non-Departmental	General Fund (100)	-	$	-	$	500,000	Economic Reserve allocation with the FY 2023/24 GF surplus.
Non-Departmental	General Fund (100)	-	$	-	$	1,340,000	Fleet Capital Reserve allocation with the FY 2023/24 GF Surplus.
Non-Departmental	General Fund (100)	-	$	-	$	2,000,000	Contribution toward the acquisition of property within Clover Valley (valley slopes and floors).
Parks and Recreation	General Fund (100)	-	$	-	$	300,000	Funding for the Northwest Community Parks Master Plan with the FY 2023/24 GF surplus.
Police	General Fund (100)	-	$	8,250	$	8,250	Reimbursements received by the Police Department for hosting a two-day training session from other agencies.
Police	General Fund (100)	-	$	5,000	$	5,000	Reimbursements received by the Police Dispatch unit for participating in a voluntary, one-time next generation 911 call testing.
Public Works	General Fund (100)	-	$	-	$	200,000	Funding for the emergency generator at the Corporation Yard.
	Total General Fund	**-**	**$**	**7,898,818**	**$**	**6,228,250**	
Other Funds							
City Manager	Low Mod Income Housing Asset (270)	-	$	-	$	12,500	Provide community funding for homeless prevention and rapid rehousing.
Non-Departmental	Building Reserve (180)	-	$	750,000	$	-	Building Reserve allocation with the FY 2023/24 GF surplus.
Non-Departmental	Economic Reserve (122)	-	$	500,000	$	-	Economic Reserve allocation with the FY 2023/24 GF surplus.
Non-Departmental	Park Infrastructure Reserve (170)	-	$	750,000	$	-	Park Infrastructure Reserve allocation with the FY 2023/24 GF surplus.
Non-Departmental	Retirees' Health Fund (151)	-	$	-	$	1,000,000	Reallocation of funding to the pension trust.

Budget Adjustments					
Department	**Fund Name (No.)**	**FTE**	**Revenue/ Reimbursement Adjustments**	**Expenditure Adjustments**	**Description**
Non-Departmental	Vehicle Fleet Management (500)	-	$ 1,340,000	$ -	Fleet Capital Reserve allocation with the FY 2023/24 GF Surplus.
	Total Other Funds	**-**	**$ 3,340,000**	**$ 1,012,500**	

FY 2023/24 Year End Excess Resources
FUNDING RECOMMENDATIONS

Amphitheater Upgrades ($250,000)
Staff recommends upgrades to the Quarry Park Amphitheater to enhance the stage and ancillary facilities, improving the overall event experience and expanding the venue's capabilities. Planned upgrades include replacing the soundboard concrete pad, expanding backstage areas, enhancing lighting for safety and automated control, and installing structural improvements like a truss and hoist system for rigging. Additionally, a shade screen will be added to provide comfort for performers. These upgrades will ensure the venue can accommodate a wider range of performances and community events, supporting Rocklin's "Livable" strategic pillar by fostering a quality, inclusive space that promotes health, happiness, and prosperity.

CAD to CAD ($150,000)
Staff recommends investing in a CAD to CAD system for the Fire Department. This project aims to improve emergency response times across Rocklin and Placer County by enhancing communication between public safety agencies. In emergencies that span jurisdictions, nearly every fire agency relies on mutual aid, and quick, accurate communication is critical. However, incompatible Computer-Aided Dispatch (CAD) systems create inefficiencies in emergency communication. This project reduces voice calls between dispatchers, providing instant and reliable incident information between agencies, and dramatically cutting dispatch to response times. By improving emergency response coordination, the project directly supports Rocklin's strategic pillar of "Safe", which strives to ensure residents feel secure walking, biking, and enjoying public spaces, while prioritizing rapid, efficient emergency response to keep the community safe.

Clover Valley ($2,000,000)
The City Council directed staff to prepare an agreement with the Placer Land Trust to contribute $2 million toward the acquisition of property within Clover Valley, often referred to as the "slopes and valley floor." This funding will support the purchase and permanent preservation of the land for public use and conservation.

Corporation Yard Emergency Generator ($200,000)
As part of the City's emergency preparedness efforts, staff recommends purchasing an emergency generator for the corporation yard to ensure continuous operations during power outages. The corporation yard serves as a secondary Emergency Operations Center, and as a critical hub for the Public Works and Parks and Recreation departments' emergency response operations. Funding for the generator was originally approved by the City Council in FY 2021/22; however, the funds were not carried forward in the budget process. This appropriation is necessary to re-assign resources to this critical need, ensuring the corporation yard is able to remain operational during power disruptions. This project aligns with the strategic pillar of "Resilience," supporting the City's ability to withstand and quickly recover from disasters and disruptions.

Facilities Assessment ($250,000)
Staff recommends conducting a comprehensive facilities assessment to evaluate the condition of all of its City buildings and develop a long-term maintenance plan aimed at extending the life of these structures. This assessment will involve an evaluation of each building's exterior, interior, systems, and components, identifying necessary repairs, replacements, and modernization projects. The assessment will prioritize repairs, provide cost-effective solutions, and create a Preventative Maintenance Plan, helping the City effectively manage its assets and plan for future needs. This project directly supports the City's "Sustainable" strategic pillar by ensuring long-term financial planning and extending the life of City buildings. By proactively managing its facilities, the City is reinforcing its fiscal responsibility and providing a strong foundation for the community's continued success.

Fleet Parking Lot ($200,000)
Staff recommends the Civic Center Fleet Parking Lot Improvement Project to enhance the functionality and safety of the City's fleet storage and maintenance facilities. This project will upgrade parking lot infrastructure, ensuring that the City's fleet is securely housed and easily accessible for daily operations. The project includes creating a secure parking area adjacent to Quarry Park Amphitheater that will include paving, lighting, fencing, and electric charging infrastructure. This project directly supports the City of Rocklin's Strategic Plan Pillar of "Safe", by improving the parking and storage conditions for city fleet vehicles to ensure that critical resources are maintained in a secure environment.

In Lieu/Inclusionary Housing Fee Study ($150,000)
Based on the feedback provided at the 2024 joint City Council-Planning Commission workshop, staff recommends a project to evaluate an inclusionary housing ordinance and implementation of an in-lieu fee for affordable housing projects. The study will assess policy options to ensure the City effectively addresses community needs and complies with state housing laws. This initiative directly aligns with the City's "Livable" strategic pillar, ensuring affordable housing opportunities that promote health, happiness, and prosperity for all Rocklin residents.

Northwest Community Parks Master Plan ($300,000)
Staff recommends funding the development of a Master Plan for three Northwest Community Parks—Whitney Park Phase 2, Margaret Azevedo Park, and Kathy Lund Park— which aims to maximize the potential of these spaces by incorporating innovative ideas and engaging the community throughout the planning process. The final Master Plan will propose a variety of recreational uses that not only meet the needs of Rocklin residents but also provide additional recreation opportunities and benefits that could attract outside visitors. This project aligns with the City's "Livable" strategic pillar by creating inviting gathering spaces and offering diverse parks and recreational opportunities that support the health, happiness, and prosperity of all residents.

Professional Development ($150,000)
To strengthen workforce development and succession planning, staff recommends investing in the professional development of employees by establishing a comprehensive professional development program that offers targeted training opportunities aimed at enhancing skills, fostering growth, and advancing careers. This investment supports Rocklin's "Sustainable" strategic pillar by ensuring the workforce is equipped to adapt to the evolving needs of the community. A well-trained and engaged workforce strengthens the City's ability to effectively serve the public, contributes to long-term financial stability, and supports the City's efforts in diversifying funding sources, planning for the future, and maintaining a strong fiscal foundation that sustains the community's quality of life.

Public Safety Communications Upgrade ($500,000)
Staff recommends a public safety communications upgrade to enhance the City of Rocklin's emergency response capabilities and improve overall public safety through state-of-the-art technology. The existing radio infrastructure has reached its "end of life" and will require an upgrade to continue being supported under our current service contract. A comprehensive assessment is underway to identify the most efficient and optimal solution that ensures compatibility and enhances emergency response operations. By investing in advanced communication systems for local law enforcement, fire departments, and emergency services, this upgrade will ensure rapid and reliable information sharing across all city services. This project aligns with Rocklin's strategic planning pillar of "Safe", reinforcing the city's ongoing commitment to reducing crime, improving health, and maintaining the well-being of its residents.

Public Works Organizational Assessment ($75,000)
Staff recommends conducting a comprehensive analysis of the Public Works Department's policies, procedures, management, and operations. This organizational assessment will evaluate the current systems in place, identify opportunities for improvement, and provide actionable recommendations to enhance the efficiency and effectiveness of the department. This project is directly aligned with the City of Rocklin's Strategic Plan Pillar of "Sustainability", which emphasizes the importance of diversifying funding sources and maintaining a strong fiscal foundation. By ensuring that the Public Works Department operates efficiently and sustainably, the city can better align its resources, reduce unnecessary expenditures, and enhance service delivery, which ultimately supports the long-term fiscal health of Rocklin.

Shade Sails ($145,568)
Staff recommends the installation of shade sails at various neighborhood parks to enhance the comfort and usability of these public spaces. Priority will be given to parks with the least shade and highest exposure to the elements. The installation of shade sails will help Rocklin continue to offer diverse parks and unique amenities that foster inviting gathering spaces. This initiative aligns directly with the City of Rocklin's Strategic Plan Pillar of "Livable", which emphasizes quality of life that promotes health, happiness, and prosperity. By enhancing park amenities, this project supports health

and well-being by encouraging outdoor activity and social engagement in shaded, comfortable spaces.

User Fee Study ($75,000)
To ensure that service fees reflect the cost of providing City services, staff recommends conducting a user fee study. The study will evaluate the City's current fee structure to ensure that cost recovery aligns with City policies, includes a fee comparison with similar jurisdictions, and incorporates best practices. Additionally, it will ensure compliance with all relevant regulations while accurately accounting for direct, indirect, and overhead costs associated with service provision. The study will help the City maintain financial sustainability while ensuring that fees remain fair, competitive, and reflective of the cost of services provided to the community. This project directly supports Rocklin's "Sustainable" strategic pillar by ensuring a strong fiscal foundation that supports long-term community success and a high quality of life for residents.

Website Refresh ($100,000)
Staff recommends a comprehensive refresh to the City website, to modernize its design, functionality, and enhance overall user experience. Additionally, the refresh will bring the website into full compliance with ADA requirements, ensuring accessibility for all users. The refreshed website will serve as a one-stop shop for all resident resources, providing easy access to city services, information, and updates in a centralized and user-friendly platform. The project supports Rocklin's "Vibrant" strategic pillar by leveraging technology to engage the community and create a more business-friendly environment, while ensuring flexibility and resilience in meeting the needs of a diverse and growing city.

2023-2025 Strategic Planning Framework

RESILIENT

Rocklin is resilient and seeks ways to assist the community, businesses and citizens to be adaptable in the face of a changing world. The community is connected through a network of roadways, trails, and sidewalks that allow people and goods to move safely and efficiently throughout the City. Rocklin's infrastructure is designed, built, and maintained to withstand and quickly recover from disasters and disruptions.

	Pillar Objective	Progress Update October – December 2024
1.	Work towards constructing and staffing a 4th Rocklin Fire Station south/east of Interstate 80	Design development documents were completed, which includes preliminary design and conceptual design documents; design development documents completed the pre-review phase from internal and external stakeholders; an amendment to the land transfer agreement was executed granting the City more room for the station.
2.	Update the City's drainage infrastructure master plan and prioritize critical improvements	Consultant has inspected City bridges and major pipe crossings and completed this portion of the review. Consultant is investigating pipes larger than 42" in diameter as part of the next phase which is expected to continue over the spring and fall of 2025.
3.	Update the City's ADA Transition Plan	ADA Community survey was published through Survey Monkey and added to the City website in December. The survey will remain open until June 2025 to allow for resident feedback. A refresh to the information on the City ADA webpage was also completed.
4.	Establish a 3-year Pavement Management Program	Consultant (NCE) has completed pavement inspections and importing data into StreetSaver. Consultant is reviewing City projects to update budgeting tool and decision tree.
5.	Create and Implement a Strategic Plan for Information Technology services	The IT Strategic Plan contract was awarded in October 2024, and the project is now underway.
6.	Strengthen Interagency Relationships (FEMA, Caltrans, CalOES, Army Corps, CDFW, etc.)	Regular coordination meetings are on-going.

7.	Identify innovative solutions to infrastructure maintenance and enhancements	On-going. IT Strategic Plan will identify work order management needs with Public Works and Parks
8.	Implement programs to reduce fire loss and increase community preparedness	Completed. Rocklin Fire completed the Insurance Services Office review and maintained a Public Protection Classification of 2. The department continues to provide ongoing public safety education to reduce fire loss.

VIBRANT	*Rocklin stimulates a vibrant and diverse community through technology and efficient planning that is flexible and responsive. Rocklin's business friendly environment promotes economic vitality, welcoming new and supporting existing businesses through excellent customer service.*	
	Pillar Objective	Progress Update October – December 2024
1.	Continue implementation of the adopted Economic Development Strategy and support efforts to recruit, retain and expand local businesses	Staff had a booth at the Placer Valley 2024 event. Attended Growth Factory GFX event at The Grounds. Held a joint Stakeholders Summit event with GSEC at SMA, America to discuss strategic industries with local brokers and stakeholders. Presented Econ Dev Strategy update at the December 10 City Council meeting.
2.	Invest in technology that supports economic development efforts	The following progress has been made towards the City's IT economic development efforts for this reporting period: - Electronic Plan Review (Bluebeam) solution implementation completed. - SolarApp solution implementation completed. - Continued use of Comcate for Code Enforcement management. - Increased the number of permit types available for online applications and payment processing. - New Trakit workflows under development to streamline engineering permit processes. - Ongoing work on GIS Dashboard to display permit data for field inspectors.
3.	Nurture efforts to establish the Quarry District as a regional destination	Executed the second amendment for the Purchase and Sale Agreement with G3 Concepts for development of the Big Gun site.

4.	Establish a small business outreach program with CDD to assist business owners with planning, permitting, and inspections of new and tenant improvement projects	Created a development permit guide to provide to clarity on the process.
5.	Create and promote events and activities that will attract outside visitors and overnight stays	Participated in the Placer Valley Tourism (PVT) Master Planning event to discuss the city's needs and collaborated with stakeholders to develop and promote events and activities that will attract outside visitors and encourage overnight stays.
6.	Support the newly created Arts Commission's efforts: ○ To review, update, and implement elements of the 2016 Rocklin Public Art Master Plan ○ To advise the city council on all matters affecting arts and culture of the city ○ To encourage programs in the arts and to promote the cultural enrichment of the community; ○ To establish an effective liaison between the city, county, and local cultural and artistic groups	Staff presented the Commission with a "Student Art in City Hall" program to promote the arts with Rocklin students. A draft "Visioning Document" was presented to the Arts Commission that outlines initiatives that align with the City Council's charge to encourage and promote the arts, which include a student art in City Hall program, engaging in existing City events to promote the arts, serve as liaisons for local arts groups, and more.

LIVABLE	*Rocklin responsive to the unique and emerging needs of the community and offers a quality of life that supports health, happiness and prosperity to all. This results in a community where residents have access to diverse parks, unique amenities, inviting gathering spaces, quality events, and exceptional educational opportunities.*

	Pillar Objective	Progress Update October – December 2024
1.	Update the City's Zoning Code	An initial Recommendations Memo was prepared by the consultant identifying key areas of focus for the Zone Rocklin project.
2.	Use master planning processes to guide future development of parks that provide the community with amenities that currently are not offered within Rocklin's park system	RFP was released and a firm was selected to complete a master plan for the Northwest Rocklin community parks. Pickleball, shop building and restrooms at SWRA are in the planning process.
3.	Increase recreation programing to ensure programs are offered to all ages and abilities within the community	The Parks and Recreation Department continues to expand its offerings to ensure recreational programming is available for all ages and abilities within the community. A new American Sign Language (ASL) Sports program ran from October 3-October 24, 2024 and will be offered again next Fall. Enrollment for the Shining Starts Soccer program designed for school age children with a variety for special needs was. The first session will be held from January 11 - February 22, 2025 and is already at capacity. The second session will be held on May 2 – May 20, 2025. Enrollment for a new 5 vs. 5 adult basketball program was also added. The first session will begin February 16.
4.	Identify critical gaps in City Trails within the public Right Of Way	Purchase order for the consultant working on the connector bridge between SWRA and JSP has been issued.

5.	Complete the Oak & Pine affordable housing project and support efforts to increase the availability of affordable housing	City executed extension letter for Affordable Housing Agreement. City released an RFP and selected a firm to complete the analysis for an inclusionary housing ordinance and in-lieu fee.
6.	Continue to work with regional partners to address homelessness in the City	Local Government Advisory Committee (LoGAC) completed first year and presented a Year One summary to the Continuum of Care (CoC). A potential site has been identified for a navigation center in South Placer and is being vetted.

SUSTAINABLE

Rocklin seeks opportunities to diversify its funding sources to ensure a strong fiscal foundation. Intentional long-term financial planning ensures community success and supports the City's quality of life.

	Pillar Objective	Progress Update October – December 2024
1.	Evaluate opportunities to create new sources of revenue to support critical City services	Research is ongoing.
2.	Implement a new Records Management enterprise system that is user friendly for both City staff and the public	Entered into consultant agreement with DRB Consulting Services, and began developing project timeline. Phase I of project will be updating Citywide Records Retention Schedule.
3.	Implement a Section 115 Trust to better address CalPERS obligations	Item was completed in 2023.
4.	Implement a two-year operating budget	Kicked off internal budget development process for the two-year budget cycle (Fiscal Years 2025-27).
5.	Update the City's Purchasing Code	Draft update to the Code prepared for Council consideration in January 2025.
6.	Update Infrastructure Reserve Studies	Project is ongoing.
7.	Implement comprehensive workforce development and succession planning programs	Continue working toward implementing the revised performance management process, which will help with the development of a succession planning program.
8.	Establish plans for reaching 100% funded for the City's facility and fleet replacement reserves	Began evaluating comprehensive fleet replacement needs and the associated replacement cost required to reach the reserve target.

SAFE

Rocklin residents feel comfortable walking and biking throughout the community, enjoying parks and public spaces, and know that the City is prioritizing the safety, health, and wellbeing of its community. Rocklin invests in public safety by providing resources and technology to consistently reduce crime and ensure the City remains safe. The City partners with nonprofits, social service agencies, and the community to address the Root causes of crime and social instability.

	Pillar Objective	Progress Update October – December 2024
1.	Maintain, improve, and expand City partnerships that aid in crime prevention and creating a safe community	Worked with many of Rocklin's larger retail entities to conduct Retail Theft Blitz Operations throughout the city. A total of five operations were conducted this quarter resulting in five arrests.
2.	Continue public education efforts regarding prevention of crimes of opportunity	RPD participated in over 15 community events including Coffee with a Cop, Fentanyl Awareness Panel and a Drug Take Back operation. RPD continues planning work with RUSD and Sierra College to teach an AJ50 (Intro to Criminal Justice) dual enrollment class at Rocklin HS and Whitney HS in the upcoming school year.
3.	Evaluate the creation of a Real Time Crime Center	The Rocklin Intelligence Center (RIC) added six more Automatic License Plate Readers (ALPRs) this quarter near the Sierra College Blvd. and I-80 interchange
4.	Improve Interoperability between law enforcement, fire, and EMS agencies	The Fire Department received all portable dual band radios in December 2024. RPD began planning an update to eight towers to maintain quality radio communications and bring better coverage for both RPD and RFD.
5.	Update antiquated Fire station alerting systems	Completed.
6.	Improve Cardiac Arrest Survivability by deploying citizen CPR public education and increasing AED distribution	The department continued to provide hands only CPR training at community events.

ROCKLIN
CALIFORNIA

City Council Staff Report

Subject: Establishing Campaign Contribution Regulations Regarding Redesignation of Committees and Accounts

Date: February 25, 2025

Submitted By: Matthew McOmber, City Attorney

Department: City Attorney's Office

Recommendation:
Introduce, Waive the Full Reading and Read by Title Only, an Ordinance of the City Council of the City of Rocklin Adding Chapter 2.68 to the Rocklin Municipal Code Establishing Campaign Contribution Regulations.

Background:
State laws enacted pursuant to AB 571 govern an elective candidate's ability to establish, fund, and use campaign contributions, committees, and associated bank accounts. Absent a local ordinance that provides alternative rules and regulations, cities are subject to the default State laws on these topics. The City of Rocklin does not currently have a campaign contribution limits ordinance and as such, is subject to AB 571. For City Council candidates, this means that unless the City adopts an ordinance that allows for different rules, a candidate who is qualified as a committee must establish a separate controlled committee and campaign bank account for each specific office each election cycle – candidates may not redesignate a committee from one election for another election. In light of the above, the City Council may consider adopting an ordinance to allow candidates to redesignate funds from office to office, with certain limitations, but without the mandate to establish a separate controlled committee. The ordinance before the City Council with this item is provided for that purpose.

As drafted, the ordinance would not alter default State laws governing campaign contribution limits, which as of the date of this staff report are $5,900 per person, small contributor committee, and political party, respectively.

Additional information on these topics is available on the Fair Political Practices Commission's (FPPC) website (see "AB 571 Fact Sheet" and "Local City and Contribution Rules (AB 571)" available online at https://www.fppc.ca.gov/).

Fiscal Impact:
There is no direct fiscal impact associated with the staff recommendation.

ATTACHMENTS:

1. Ordinance

ORDINANCE NO. XXXX

AN ORDINANCE OF THE CITY COUNCIL OF THE CITY OF ROCKLIN
ADDING CHAPTER 2.68 TO THE ROCKLIN MUNICIPAL CODE
ESTABLISHING CAMPAIGN CONTRIBUTION REGULATIONS
CHAPTER 2.68 - CAMPAIGN CONTRIBUTION REGULATIONS

The City Council of the City of Rocklin does ordain as follows:

Section 1. **Purpose and Intent.**

A. It is the purpose and intent of this Ordinance to adopt rules and regulations consistent with the State Legislature's adoption in 2019 of Assembly Bill 571 ("AB 571") to allow campaign contribution transfers and carryovers, and for redesignations of controlled committees and campaign bank accounts, subject to the rules set forth herein.

B. The terms used in this Ordinance shall have the same definitions as specified in the Political Reform Act of 1974 (the "Act"), as amended from time to time, and Regulations of the Fair Political Practices Commission (the "FPPC Regulations"), as amended from time to time.

Section 2. **Default State Campaign Contribution Limits Apply.** Consistent with Government Code section 85301(d), and the City's authority under Government Code section 85702.5(a), the City's local campaign contribution limits shall be the default limits under the Act and FPPC Regulations, as amended from time to time.

Section 3. **Transfers of Non-Surplus Campaign Funds.** A candidate for elective city office may transfer non-surplus campaign funds, within the meaning of Government Code section 89519, from one controlled committee to another committee controlled by the same candidate for the same or a different state, county, or city elective office. Contributions transferred shall be attributed to specific contributors using a "last in, first out" or "first in, first out" accounting method, and these attributed contributions when aggregated with all other contributions from the same contributor shall be subject to the same default limitations on contributions of any contributor to any candidate or controlled committee as established in the Act and FPPC Regulations, as amended from time to time.

Section 4. **Carryover of Non-Surplus Campaign Contributions.** A candidate for elective city office may carry over non-surplus campaign contributions, within the meaning of Government Code section 89519, raised in connection with one election for elective city office to pay for campaign expenditures incurred in connection with a subsequent election for the same elective city office if the carry over contribution complies with Title 2, California Code of Regulations, Section 18537.1.

Section 5. **Redesignation of Controlled Committees and Campaign Bank Accounts.** A controlled committee and campaign bank account established for a local elective office may be redesignated as a campaign bank account for a future election if:

1) The future election is for the same elective office;
2) The funds in the campaign bank account/committee are not considered "surplus campaign funds" as defined in Government Code section 89519;
3) The candidate amends the Statement of Organization for the committee to reflect the redesignation for the future election;
4) The candidate files a new statement, signed under penalty of perjury, of intention to be a candidate for the specific future election; and
5) Redesignation of committees/bank accounts is not otherwise prohibited by law.

Section 6. **Consistency with State Regulations.** It is the intent of this Chapter that transfers and carryovers of a candidate's campaign funds, and redesignations of controlled committees and the establishment of campaign bank accounts be consistent with the provisions of law set forth in Government Code sections 85301, 85306, and 85317, and Title 2, Sections 18521, 18536 and 18537.1 of the California Code of Regulations.

Section 7. **Applicability of Other Laws.** Nothing in this article shall exempt any person from, or excuse such person's noncompliance with, applicable provisions of any other laws of the state or any other jurisdiction. The default campaign contribution limits adopted herein shall not be construed to render any provision of law inapplicable or inoperable, including but not limited to Government Code sections 85305, 85307, 85315, 85316, and 85318, which shall expressly remain operative to the extent applicable to candidates for elective city office.

Section 8. **Severability.** If any sections, subsections, subdivisions, paragraph, sentence, clause or phrase of this Ordinance or any part hereof or exhibit hereto is for any reason held to be invalid, such invalidity shall not affect the validity of the remaining portions of this Ordinance or any part thereof or exhibit thereto. The City Council hereby declares that it would have passed each section, subsection, subdivision, paragraph, sentence, clause, or phrase hereof, irrespective of the fact that anyone or more sections, subsections, subdivisions, paragraph, sentences, clauses, or phrases be declared invalid.

Section 9. **Publication.** Within fifteen (15) days of the passage of this ordinance, the City Clerk shall cause the full text of the ordinance, with the names of those City Council members voting for and against the ordinance, to be published in the Placer Herald. In lieu of publishing the full text of the ordinance, the City Clerk, if so directed by the City Attorney and within fifteen (15) days, shall cause a summary of the ordinance, prepared by the City Attorney and with the names of the City Council members voting for and against the ordinance, to be published in the Placer Herald, and shall post in the office of the City Clerk a certified copy of the full text of the ordinance, along with the names of those City Council members voting for and against the ordinance. The publication of a summary of the ordinance in lieu of the full text of the ordinance is authorized only where the requirements of Government Code section 36933(c)(1) are met.

Section 10. **Effective Date.** This Ordinance shall take effect thirty days after its adoption.

INTRODUCED at a regular meeting of the City Council of the City of Rocklin held on February 25, 2025, by the following vote:

AYES: Councilmembers:
NOES: Councilmembers:
ABSENT: Councilmembers
ABSTAIN: Councilmembers

PASSED AND ADOPTED at a regular meeting of the City Council of the City of Rocklin held on _____, 2025, by the following vote:

AYES: Councilmembers:
NOES: Councilmembers:
ABSENT: Councilmembers:
ABSTAIN: Councilmembers:

_____
Jill Gayaldo, Mayor

ATTEST:

_____
Avinta Singh, City Clerk

First Reading: 02.25.2025
Second Reading:
Effective Date: