City of Rolling Hills INCORPORATED JANUARY 24, 1957

2 PORTUGUESE BEND ROAD
ROLLING HILLS, CA 90274
(310) 377-1521

AGENDA | **CITY COUNCIL** | **CITY OF ROLLING HILLS**
Regular City Council Meeting | **Monday, January 09, 2023** | **7:00 PM**

The meeting agenda is available on the City's website. The City Council meeting will be live-streamed on the City's website. Both the agenda and the live-streamed video can be found here:
https://www.rolling-hills.org/government/agenda/index.php

Members of the public may submit written comments in real-time by emailing the City Clerk's office at cityclerk@cityofrh.net. Your comments will become part of the official meeting record. You must provide your full name, but please do not provide any other personal information that you do not want to be published.

Recordings to City Council meetings can be found here: https://www.rolling-hills.org/government/agenda/index.php

Next Resolution No. 1323 *Next Ordinance No. 383*

1. CALL TO ORDER

2. ROLL CALL

3. PLEDGE OF ALLEGIANCE

4. PRESENTATIONS/PROCLAMATIONS/ANNOUNCEMENTS

5. BLUE FOLDER ITEMS (SUPPLEMENTAL)

Blue folder (supplemental) items are additional back up materials to administrative reports, changes to the posted agenda packet, and/or public comments received after the printing and distribution of the agenda packet for receive and file.

6. PUBLIC COMMENT ON NON-AGENDA ITEMS

*This is the appropriate time for members of the public to make comments regarding items**not** listed on this agenda. Pursuant to the Brown Act, no action will take place on any items not on the agenda.*

7. CONSENT CALENDAR

Business items, except those formally noticed for public hearing, or those pulled for discussion are assigned to the Consent Calendar. The Mayor or any Councilmember may request that any Consent Calendar item(s) be removed, discussed, and acted upon separately. Items removed from the Consent Calendar will be taken up under the "Excluded Consent Calendar" section below. Those items remaining on the Consent Calendar will be approved in one motion. The Mayor will call on anyone wishing to address the City Council on any Consent Calendar item on the agenda, which has not been pulled by Councilmembers for discussion.

7.A. APPROVE AFFIDAVIT OF POSTING FOR THE CITY COUNCIL REGULAR MEETING OF JANUARY 9, 2023

RECOMMENDATION: Approve.

CL_AGN_230109_CC_AffidavitofPosting.pdf

7.B. APPROVE MOTION TO READ BY TITLE ONLY AND WAIVE FURTHER READING OF ALL ORDINANCES AND RESOLUTIONS LISTED ON THE AGENDA
RECOMMENDATION: Approve.

7.C. APPROVE THE FOLLOWING CITY COUNCIL MINUTES: DECEMBER 13, 2022
RECOMMENDATION: Approve as presented.
CL_MIN_221213_CC_F.pdf

7.D. PAYMENT OF BILLS.
RECOMMENDATION: Approve as presented.
CL_AGN_230109_CC_PaymentOfBills.pdf

7.E. APPROVE CITY COUNCIL MEETING DATES FOR CALENDAR YEAR 2023
RECOMMENDATION: Approve as presented.
CL_AGN_230109_CC_2023_MeetingDates.pdf

7.F. APPROVE ANNUAL VENDOR LIST FOR CALENDAR YEAR 2023
RECOMMENDATION: Approve as presented.
VC_230109_PreferredVendorList.pdf

7.G. APPROVE REPUBLIC SERVICES' 2023 CLEAN-UP AND COMMUNAL BIN SCHEDULE
RECOMMENDATION: Approve as presented.

7.H. FOR SECOND READING AND ADOPTION: ADOPT BY TITLE ONLY ORDINANCE NO. 381 AMENDING CHAPTER 17.28 OF THE ROLLING HILLS MUNICIPAL CODE REGARDING ACCESSORY DWELLING UNITS AND JUNIOR ACCESSORY DWELLING UNITS AND DETERMINING THE ORDINANCES TO BE EXEMPT FROM CEQA
RECOMMENDATION: Adopt by title only Ordinance No. 381, entitled, "AN ORDINANCE OF THE CITY COUNCIL OF THE CITY OF ROLLING HILLS AMENDING CHAPTER 17.28 OF THE ROLLING HILLS MUNICIPAL CODE REGARDING ACCESSORY DWELLING UNITS AND JUNIOR ACCESSORY DWELLING UNITS AND DETERMINING THE ORDINANCE TO BE EXEMPT FROM CEQA."
Attachment 1 - CL_ORD_381_ADU Ordinance_D3.pdf

7.I. FOR SECOND READING AND ADOPTION:Â ADOPT BY TITLE ONLY ORDINANCE NO. 382 AMENDING TITLE 15 (BUILDINGS AND CONSTRUCTION) OF THE ROLLING HILLS MUNICIPAL CODE AND DETERMINING THE ORDINANCE EXEMPT FROM CEQA
RECOMMENDATION: It is recommended that the City Council waive full reading and adopt Ordinance No. 382 amending Title 15 regarding Building and Construction.
ATTACHMENT 1 - CL_ORD_382_BuildingCodeOrdinance_D2.pdf

7.J. ADOPT RESOLUTION NO. 1321 OF THE CITY COUNCIL OF THE CITY OF ROLLING HILLS AUTHORIZING SUBMITTAL OF APPLICATIONS FOR THE CALIFORNIA DEPARTMENT OF RESOURCES RECYCLING AND RECOVERY

(CALRECYCLE) PAYMENT PROGRAMS AND RELATED AUTHORIZATIONS
RECOMMENDATION: Approve as presented.
ResolutionNo1321_CalRecycleGrant.pdf

8. EXCLUDED CONSENT CALENDAR ITEMS

9. COMMISSION ITEMS

10. PUBLIC HEARINGS

11. OLD BUSINESS

11.A. APPROVE PLANS AND SPECIFICATIONS AND AUTHORIZE SOLICITATION FOR CONSTRUCTION BIDS FOR THE CITY HALL HEATING, VENTILATION AND AIR CONDITIONING (HVAC) PROJECT AND FINDING THE SAME EXEMPT FROM THE CALIFORNIA ENVIRONMENTAL QUALITY ACT.
RECOMMENDATION: Approve as presented.
CL_AGN_230109_CC_HVAC_UpgradeCostEstimate.pdf
CL_AGN_230109_CC_HVAC_RepairSpecs.pdf
CL_AGN_230109_CC_HVAC_RepairDrawings.pdf

11.B. RECEIVE AND FILE AN UPDATE TO THE OUTDOOR SIREN PROJECT
RECOMMENDATION:

Receive and file

CL-AGN_230109_CC_22-12-21_SpecialNewsletter.pdf
CL-AGN_230109_CC_SBN Comments.pdf

12. NEW BUSINESS

12.A. PROPOSED FISCAL YEAR 2023/24 BUDGET CALENDAR
RECOMMENDATION: Review and approve the proposed budget calendar for the development of the fiscal year 2023/24 budget.
FN_BUD_230109_Calendar_FY23-24.pdf

12.B. CONSIDER ENGAGING 4LEAF, INC. TO PROVIDE CODE ENFORCEMENT SERVICES, AND DIRECT STAFF TO EXECUTE A PROFESSIONAL SERVICES AGREEMENT FOR AN AMOUNT NOT-TO-EXCEED $87,880 FOR ONE CALENDAR YEAR INCLUDING $68,380 FOR THE REMAINDER OF THE 2022-2023 FISCAL YEAR
RECOMMENDATION: Direct the City Manager to execute a Professional Services Agreement with 4LEAF, Inc. for code enforcement services.
CA_AGR_4Leaf_On_Call_CE PSA-c1_DRAFT-c1.pdf
PL_CON_20221128_CE_4LEAF_SOQ_without_appendix.pdf
PL_CON_4LEAF_FeeSchedule22_23.pdf

13. MATTERS FROM THE CITY COUNCIL

14. MATTERS FROM STAFF

14.A. FIRE FUEL ABATEMENT AND CODE ENFORCEMENT QUARTERLY REPORT FOR THE FOURTH QUARTER OF 2022 (OCTOBER 1 THROUGH DECEMBER 31)

RECOMMENDATION: Receive and file.

CE_QRP_2022_Q4_Opened_Cases.pdf
CE_QRP_2022_Q4_Closed_Cases.pdf
CE_QRP_2022_Q4_Cumulative_Open_Cases.pdf

15. CLOSED SESSION

16. RECONVENE TO OPEN SESSION

17. ADJOURNMENT

Next regular meeting: Monday, January 23, 2023 at 7:00 p.m. in the City Council Chamber, Rolling Hills City Hall, 2 Portuguese Bend Road, Rolling Hills, California, 90274.

Notice:

Public Comment is welcome on any item prior to City Council action on the item.

Documents pertaining to an agenda item received after the posting of the agenda are available for review in the City Clerk's office or at the meeting at which the item will be considered.

In compliance with the Americans with Disabilities Act (ADA), if you need special assistance to participate in this meeting due to your disability, please contact the City Clerk at (310) 377-1521 at least 48 hours prior to the meeting to enable the City to make reasonable arrangements to ensure accessibility and accommodation for your review of this agenda and attendance at this meeting.

City of Rolling Hills INCORPORATED JANUARY 24, 1957

Agenda Item No.: 7.A
Mtg. Date: 01/09/2023

TO: HONORABLE MAYOR AND MEMBERS OF THE CITY COUNCIL

FROM: CHRISTIAN HORVATH, CITY CLERK / EXECUTIVE ASSISTANT TO CITY MANAGER

THRU: ELAINE JENG P.E., CITY MANAGER

SUBJECT: APPROVE AFFIDAVIT OF POSTING FOR THE CITY COUNCIL REGULAR MEETING OF JANUARY 9, 2023

DATE: January 09, 2023

BACKGROUND:
None.

DISCUSSION:
None.

FISCAL IMPACT:
None.

RECOMMENDATION:
Approve.

ATTACHMENTS:
CL_AGN_230109_CC_AffidavitofPosting.pdf

Administrative Report

7.A., **File #** 1585 **Meeting Date**: 01/09/2023

To: MAYOR & CITY COUNCIL

From: Christian Horvath, City Clerk

TITLE

APPROVE AFFIDAVIT OF POSTING FOR THE CITY COUNCIL REGULAR MEETING OF JANUARY 9, 2023

EXECUTIVE SUMMARY

STATE OF CALIFORNIA)
COUNTY OF LOS ANGELES) SS
CITY OF ROLLING HILLS)

AFFIDAVIT OF POSTING

In compliance with the Brown Act, the following materials have been posted at the locations below.

Legislative Body	City Council
Posting Type	Regular Meeting Agenda
Posting Location	2 Portuguese Bend Road, Rolling Hills, CA 90274 City Hall Window City Website: https://www.rolling-hills.org/government/agenda/index.php https://www.rolling-hills.org/government/city_council/city_council_archive_agendas/index.php
Meeting Date & Time	January 9, 2023 7:00pm Open Session

As City Clerk of the City of Rolling Hills, I declare under penalty of perjury, the document noted above was posted at the date displayed below.

Christian Horvath, City Clerk

Date: January 6, 2022

Agenda Item No.: 7.B
Mtg. Date: 01/09/2023

TO: **HONORABLE MAYOR AND MEMBERS OF THE CITY COUNCIL**

FROM: **CHRISTIAN HORVATH, CITY CLERK / EXECUTIVE ASSISTANT TO CITY MANAGER**

THRU: **ELAINE JENG P.E., CITY MANAGER**

SUBJECT: **APPROVE MOTION TO READ BY TITLE ONLY AND WAIVE FURTHER READING OF ALL ORDINANCES AND RESOLUTIONS LISTED ON THE AGENDA**

DATE: **January 09, 2023**

BACKGROUND:
None.

DISCUSSION:
None.

FISCAL IMPACT:
None.

RECOMMENDATION:
Approve.

ATTACHMENTS:

Agenda Item No.: 7.C
Mtg. Date: 01/09/2023

TO: **HONORABLE MAYOR AND MEMBERS OF THE CITY COUNCIL**

FROM: **CHRISTIAN HORVATH, CITY CLERK / EXECUTIVE ASSISTANT TO CITY MANAGER**

THRU: **ELAINE JENG P.E., CITY MANAGER**

SUBJECT: **APPROVE THE FOLLOWING CITY COUNCIL MINUTES: DECEMBER 13, 2022**

DATE: **January 09, 2023**

BACKGROUND:
None.

DISCUSSION:
None.

FISCAL IMPACT:
None.

RECOMMENDATION:
Approve as presented.

ATTACHMENTS:
CL_MIN_221213_CC_F.pdf

Minutes
Rolling Hills City Council
Monday, December 13, 2022
Regular Meeting 7:00 p.m.

1. CALL TO ORDER

The City Council of the City of Rolling Hills met in person on the above date at 7:00 p.m. Mayor Black presiding.

2. ROLL CALL

Councilmembers Present:	Dieringer, Pieper, Mirsch, Mayor Pro Tem Wilson, Mayor Black
Councilmembers Absent:	None
Staff Present:	Elaine Jeng, City Manager
	Michael Jenkins, City Attorney
	John Signo, Planning & Community Services Director
	Vanessa Hevener, Senior Management Analyst

3. PLEDGE OF ALLEGIANCE – Councilmember Dieringer

4. CERTIFICATION OF ELECTION / CITY COUNCIL REORGANIZATION / PRESENTATIONS / PROCLAMATIONS

4.A. MAYOR'S PRESENTATION OF KEY TO THE CITY RECOGNIZING CITY ATTORNEY MICHAEL JENKINS FOR HIS 40 YEARS OF SERVICE TO THE CITY OF ROLLING HILLS

Mayor Black presented the Key to the City and Recognition plaque to City Attorney Jenkins.

City Attorney Jenkins addressed the Council with personal remarks.

Public Comment: Gordana Swanson, Tony Dahlerbruch, City Manager Jeng

4.B. ADOPT BY TITLE ONLY RESOLUTION NO. 1317 RECITING THE FACT OF THE GENERAL MUNICIPAL ELECTION HELD ON TUESDAY, NOVEMBER 8, 2022, DECLARING THE RESULTS AND SUCH MATTERS AS PROVIDED BY LAW

Presentation by Planning & Community Services Director Signo

Motion by Councilmember Dieringer, seconded by Councilmember Pieper Adopt Resolution 1317 declaring the results of the General Municipal Election held on November 8, 2022 and taking such further actions as provided by law to complete the election process. Motion carried unanimously with the following vote:

AYES:	Dieringer, Pieper, Mirsch, Wilson, Mayor Black
NOES:	None
ABSENT:	None

4.C. ADMINISTRATION OF OATH OF OFFICE BY CITY CLERK TO RE-ELECTED MAYOR JAMES BLACK, M.D.

4.D. ADMINISTRATION OF OATH OF OFFICE BY CITY CLERK TO RE-ELECTED MAYOR PRO TEM PATRICK WILSON

4.E. ADMINISTRATION OF OATH OF OFFICE BY CITY CLERK TO RE-ELECTED COUNCILMEMBER LEAH MIRSCH

City Manager Jeng administered the Oath of Office to all three re-elected officials at the same time.

4.F. CITY COUNCIL REORGANIZATION

Motion by Mayor Black, seconded by Councilmember Mirsch to nominate Mayor Pro Tem Wilson to serve as Mayor. Motion carried unanimously with the following vote:

AYES: Dieringer, Pieper, Mirsch, Wilson, Mayor Black
NOES: None
ABSENT: None

Mayor Wilson presented a Plaque of Recognition to former Mayor Black in appreciation for his service, as well as Certificates of Recognition from Assemblymember Muratsuchi, Supervisor Hahn, the City of Rolling Hills Estates, the City of Palos Verdes and the City of Rancho Palos Verdes.

Motion by Mayor Wilson, seconded by Councilmember Dieringer to nominate Councilmember Mirsch to serve as Mayor Pro Tem. Motion carried unanimously with the following vote:

AYES: Black, Dieringer, Pieper, Mirsch, Mayor Wilson
NOES: None
ABSENT: None

Mayor Wilson called for a brief recess at 7:46 p.m.

Mayor Wilson called the meeting back to order at 8:01 p.m.

5. BLUE FOLDER ITEMS (SUPPLEMENTAL) – NONE

6. PUBLIC COMMENT ON NON-AGENDA ITEMS – NONE

7. CONSENT CALENDAR

7.A. APPROVE AFFIDAVIT OF POSTING FOR THE CITY COUNCIL REGULAR MEETING OF DECEMBER 13, 2022

7.B. APPROVE MOTION TO READ BY TITLE ONLY AND WAIVE FURTHER READING OF ALL ORDINANCES AND RESOLUTIONS LISTED ON THE AGENDA

7.C. APPROVE THE FOLLOWING CITY COUNCIL MINUTES: NOVEMBER 14, 2022

7.D. PAYMENT OF BILLS

7.E. REPUBLIC SERVICES RECYCLING TONNAGE REPORT FOR NOVEMBER 2022

7.F. PULLED BY MAYOR WILSON

7.G. PULLED BY COUNCILMEMBER DIERINGER

7.H. APPROVE A PROFESSIONAL SERVICES AGREEMENT WITH BENNETT LANDSCAPE TO PROVIDE LANDSCAPING SERVICES FOR THE CITY HALL CAMPUS

7.I. APPROVE THE FIRST AMENDMENT TO PROFESSIONAL SERVICES AGREEMENT WITH WILLDAN FOR PHASE 2 OF THE SANITARY SEWER FEASIBILITY STUDY FOR A NOT-TO-EXCEED FEE OF $9,010; ADOPT BY RESOLUTION NO. 1318 AUTHORIZING A BUDGET MODIFICATION OF $9,010.

7.J. PULLED BY COUNCILMEMBER DIERINGER

Motion by Councilmember Pieper, seconded by Councilmember Mirsch to approve Consent Calendar. Motion carried unanimously with the following vote:

AYES: Black, Dieringer, Pieper, Mirsch, Mayor Wilson
NOES: None
ABSENT: None

8. EXCLUDED CONSENT CALENDAR ITEMS

7.F. RECEIVE AND FILE A LETTER FROM HCD INDICATING THE CITY'S 6TH CYCLE HOUSING ELEMENT, ALONG WITH TECHNICAL MODIFICATIONS, IS IN FULL COMPLIANCE WITH STATE LAW AND ACCEPT THE TECHNICAL MODIFICATIONS

Motion by Councilmember Mirsch, seconded by Councilmember Black to receive and file. Motion carried unanimously with the following vote:

AYES: Black, Dieringer, Pieper, Mirsch, Mayor Wilson
NOES: None
ABSENT: None

7.G. APPROVE A PROFESSIONAL SERVICES AGREEMENT WITH ONWARD ENGINEERING TO PROVIDE ON-CALL CONSTRUCTION OR GENERAL INSPECTION SERVICES DURING FY22/23 FOR A NOT-TO-EXCEED FEE OF $24,470; ADOPT BY RESOLUTION NO. 1319 AUTHORIZING A BUDGET MODIFICATION OF $24,470

Motion by Councilmember Pieper, seconded by Councilmember Black to Adopt by Resolution No. 1319 authorizing a budget modification of $24,470 and approve the professional service agreement as amended with the addition of the $135.00 hourly rate. Motion carried unanimously with the following vote:

AYES: Black, Dieringer, Pieper, Mirsch, Mayor Wilson
NOES: None
ABSENT: None

7.J. ACCEPT EMERGENCY STORM DRAIN REPAIR AT 3 MIDDLERIDGE LANE NORTH AS COMPLETE, FILE NOTICE OF COMPLETION, AND RELEASE RETENTION AFTER 30 DAY LIEN PERIOD TO EC CONSTRUCTION

Motion by Councilmember Dieringer to have a letter from Onward Engineering regarding whatever they observed and their opinion as to the work done so the City Council has some information on which to base an acceptance of the project.

Motion failed for lack of a second.

Motion by Councilmember Mirsch to accept this item with the addition of the photographs to staff records, seconded by Councilmember Pieper. Motion carried with the following vote:

AYES: Black, Pieper, Mirsch, Mayor Wilson
NOES: Dieringer
ABSENT: None

9. COMMISSION ITEMS – NONE

10. PUBLIC HEARINGS

10.A. PUBLIC HEARING FOR INTRODUCTION AND FIRST READING OF ORDINANCE NO. 381 AND ADOPTION OF URGENCY ORDINANCE NO. 381-U AMENDING CHAPTER 17.28 OF THE ROLLING HILLS MUNICIPAL CODE REGARDING ACCESSORY DWELLING UNITS AND JUNIOR ACCESSORY DWELLING UNITS AND DETERMINING THE ORDINANCES TO BE EXEMPT FROM CEQA

Presentation by Planning & Community Services Director Signo

Motion by Councilmember Black, seconded by Councilmember Dieringer to find that the adoption of the ordinances is statutorily exempt from review under CEQA pursuant to Public Resources Code Section 21080.17; Introduce for first reading by title only Ordinance No. 381 regarding ADUs and JADUs; and Adopt Ordinance No. 381-U regarding ADUs and JADUs. Motion carried unanimously with the following vote:

AYES: Black, Dieringer, Pieper, Mirsch, Mayor Wilson
NOES: None
ABSENT: None

11. NEW BUSINESS

11.A. ADOPT RESOLUTION NO. 1320, A RESOLUTION OF THE CITY COUNCIL OF THE CITY OF ROLLING HILLS APPOINTING PATRICK DONEGAN AS CITY ATTORNEY; AND AUTHORIZE THE CITY MANAGER TO EXECUTE ANY DOCUMENTS NECESSARY TO IMPLEMENT THE APPOINTMENT

Presentation by City Attorney Michael Jenkins

Motion by Councilmember Pieper, seconded by Councilmember Mirsch to approve as presented. Motion carried with the following vote:

AYES: Black, Dieringer, Pieper, Mirsch, Mayor Wilson
NOES: None
ABSENT: None

11.B. INTRODUCTION AND FIRST READING OF ORDINANCE NO. 382 AND ADOPTION OF URGENCY ORDINANCE NO. 382-U AMENDING TITLE 15 (BUILDINGS AND CONSTRUCTION) OF THE ROLLING HILLS MUNICIPAL CODE AND DETERMINING THE ORDINANCE EXEMPT FROM CEQA

Presentation by Planning & Community Services Director Signo

Motion by Councilmember Black, seconded by Councilmember Mirsch to find that the adoption of the ordinances is not a project subject to CEQA review because it has no potential for resulting in physical change to the environment; Introduce for first reading by title only Ordinance No. 382 regarding building and construction; and Adopt Ordinance No. 382-U regarding building and construction. Motion carried unanimously with the following vote:

AYES: Black, Dieringer, Pieper, Mirsch, Mayor Wilson
NOES: None
ABSENT: None

12. OLD BUSINESS

12.A. RECEIVE FEEDBACK FROM CALWATER, COUNTY OF LOS ANGELES FIRE DEPARTMENT, AND PALOS VERDES PENINSULA UNIFIED SCHOOL DISTRICT ON THE OUTDOOR SIREN PROJECT, AND APPROVE THE THIRD AMENDMENT TO PROFESSIONAL SERVICES AGREEMENT WITH HQE SYSTEMS IN THE AMOUNT OF $4,195

Presentation by Vanessa Hevener, Senior Management Analyst

Public Comment: Jim Aichele

Motion by Councilmember Pieper, seconded by Councilmember Dieringer to send out a blue newsletter with one side being the simplified eight proposed locations map; on the other side display the pictures depicting what the siren look like; communicate that the City Council is soliciting feedback, and will continue to have this conversation in January. Motion carried unanimously with the following vote:

AYES: Black, Dieringer, Pieper, Mirsch, Mayor Wilson
NOES: None
ABSENT: None

13. MATTERS FROM THE CITY COUNCIL

The City Council discussed General Fund Reserves quarterly report. No action was taken.

14. MATTERS FROM STAFF – NONE

15. RECESS TO CLOSED SESSION – NONE

16. RECONVENE TO OPEN SESSION – NONE

17. ADJOURNMENT: 8:58 P.M.

The meeting was adjourned in memory of Carla Routt who passed away on December 2, 2022 at 8:58 p.m on December 13, 2022. The next regular adjourned meeting of the City Council is scheduled to be held on Monday, January 9, 2023 beginning at 7:00 p.m. in the City Council Chamber at City Hall, 2 Portuguese Bend Road, Rolling Hills, California. It will also be available via City's website link at: https://www.rolling-hills.org/government/agenda/index.php

All written comments submitted are included in the record and available for public review on the City website.

Respectfully submitted,

Christian Horvath, City Clerk

Approved,

Patrick Wilson, Mayor

City of Rolling Hills INCORPORATED JANUARY 24, 1957

Agenda Item No.: 7.D
Mtg. Date: 01/09/2023

TO: **HONORABLE MAYOR AND MEMBERS OF THE CITY COUNCIL**

FROM: **CHRISTIAN HORVATH, CITY CLERK / EXECUTIVE ASSISTANT TO CITY MANAGER**

THRU: **ELAINE JENG P.E., CITY MANAGER**

SUBJECT: **PAYMENT OF BILLS.**

DATE: **January 09, 2023**

BACKGROUND:
None.

DISCUSSION:
None.

FISCAL IMPACT:
None.

RECOMMENDATION:
Approve as presented.

ATTACHMENTS:
CL_AGN_230109_CC_PaymentOfBills.pdf

CITY OF ROLLING HILLS
AP23-017 & AP23-018, & ACH23-027
Check Run 12-20-2022 & 1-9-2023

Check No.	Check Date	Payee	Description		Amount
027936	12/20/2022	Abila	11-18-2022 - 12-17-2022 Additional User		98.38
027936	12/20/2022	Abila	12-18-2022 - 01-17-2023 Accounting Software		202.59
027936	12/20/2022	Abila	MIP Cloud Bundle & Additional User INV Date 12-5-22		326.80
CHECK TOTAL			**$**	**627.77**	
027937	12/20/2022	Bennett Landscape	Irrigation Repair 12-2-2022		93.95
027938	12/20/2022	Best Best & Krieger LLP	CPUC Compliant Re: Frontier November 2022		525.00
027938	12/20/2022	Best Best & Krieger LLP	General Services & Code Enforcement- Nov. 2022		7,024.00
027938	12/20/2022	Best Best & Krieger LLP	Land Use-Professional Services November 2022		2,774.00
CHECK TOTAL			**$**	**10,323.00**	
027939	12/20/2022	Southern California News Group	November 2022 Advertising Legal CLS		642.06
027940	12/20/2022	File Keepers LLC	Storage November 2022		4.70
027941	12/20/2022	Institute for Local Government	TIERS Workshop Aug 3-4-2022		625.00
027942	12/20/2022	County of Los Angeles	Sept. 2022 V-Coyote		124.22
027943	12/20/2022	Lance, Soll & Lunghard, LLP	2022 Gov Audit Fieldwork Progress Bill		13,950.00
027944	12/20/2022	Lauren Sharng	C&D Refund Permit #823 L.Sharng		750.00
027945	12/20/2022	MARK TOWLE	2022 Annual Holiday Celebration		475.76
027946	12/20/2022	Palos Verdes Florist LLC	Holiday Flower arrangements		713.67
027947	12/20/2022	S & K Consulting services	Consulting Engineer & Design		17,195.00
027948	12/20/2022	State Water Resources Control Board	Annual Permit Fees 07-01-2022 - 06-30-2023		7,067.00
027949	12/20/2022	Willdan Inc.	Professional Services Nov 22 Project 105238.00		1,240.00
027949	12/20/2022	Willdan Inc.	Professional Services Nov. 2022 Project 101749.00		1,250.00
CHECK TOTAL			**$**	**2,490.00**	
027950	12/20/2022	Petty Cash	Replenish Petty Cash 12-20-2022		745.60
027951	1/3/2023	Abila	02-18-2022 - 03-17-2022 Accounting Software Cloud bundle		326.80
027952	1/3/2023	Alan Palermo Consulting	Nov 27 to Dec 31 Svcs - ADA, Sewer, Block Captain		5,445.00
027953	1/3/2023	Armstrong Corporate	Annual Christmas trees		992.10
027954	1/3/2023	Bolton Engineering Corporation	Tennis ct plans to County plan check		1,560.00
027955	1/3/2023	Caballeros Del Rancho Palos Verdes	Reimbursement for city events		4,948.51
027956	1/3/2023	Chambers Group	Professional Services June 2022 Project 21330		14,050.30
027957	1/3/2023	Cox Communications	Phone Service Dec 26- Jan 25 2023		154.25
027958	1/3/2023	Ellis Environmental Management Inc.	Proj. Bulk Sampling Asbestos & Lead		2,485.40
027959	1/3/2023	John L. Hunter & Assoc., Inc.	Prepare Reports for trash monitoring Oct 2022		230.00
027959	1/3/2023	John L. Hunter & Assoc., Inc.	Prepare Trash Monitoring reports Sept 2022		268.75
CHECK TOTAL			**$**	**498.75**	
027960	1/3/2023	Konica Minolta Business Solutions USA Inc.	Monthly Maintenance 11-11-22 to 12-10-22		396.46
027961	1/3/2023	County of Los Angeles	November 2022 Animal care Housing Costs		108.06
027962	1/3/2023	Los Angeles County Clerk	Nov 8 2022 General Election 4 candidates		590.00
027963	1/3/2023	LA County Sheriff's Department	November 2022 Law Enforcement Services		31,092.99
027963	1/3/2023	LA County Sheriff's Department	November 2022 LMT Traffic Enforcement Special Event		1,366.80
CHECK TOTAL			**$**	**32,459.79**	
027964	1/3/2023	McGowan Consulting	Municipal Stormwater Consulting Services Nov. 22		4,586.00
027965	1/3/2023	Leah Mirsch	Reimbursement CalPers Meeting		35.00
027966	1/3/2023	MV CHENG AND ASSOCIATES	Monthly Accounting Services November 2022		16,797.50

Check No.	Check Date	Payee	Description	Amount
027967	1/3/2023	NV5, INC.	November 2022 Services- CORH-209641 MS4 Monitoring	2,762.50
027968	1/3/2023	Orkin	Monthly Pest Control November 2022	158.00
027968	1/3/2023	Orkin	Monthly Pest Control October 2022	158.00
CHECK TOTAL			**$ 316.00**	
027969	1/3/2023	Race Communications	01/01/23 to 02/01/2023 Internet Services	1,020.00
027970	1/3/2023	Rolling Hills Tennis Club	Reimbursement for Holiday event	5,136.00
027971	1/3/2023	City of Rancho Palos Verdes	7% Monthly ALPR Camera Cnctvty - Sept-Oct. 2022 (FY21-22)	135.34
027972	1/3/2023	SANDRA DANKO	Holiday Open House 2023	628.00
027973	1/3/2023	Vanessa Hevener	Reimbursement for V. H.	133.02
027974	1/3/2023	Wildland Res Mgt.	Canyon Management Ordinance	7,500.00
027975	1/3/2023	Willdan Inc.	Professional Services NOV 22 Project 111270.00	2,600.00
ACH-149	12/16/2022	California Water Service Co.	Water Usage 10-27-22 to 11-28-2022_RANCHO	508.22
ACH-150	12/14/2022	California Water Service Co.	Water Usage 10-27-22 to 11-28-22_ROLLING	428.77
ACH-151	12/22/2022	Delta Dental	Dental Coverage January 2023	1,125.74
ACH-152	12/17/2022	The Gas Company	Gas usage from 11-07-2022 to 12-08-2022	343.84
ACH-153	11/4/2022	Nextiva	Business Phone Service November Invoice	305.64
ACH-154	12/23/2022	Southern California Edison	Electricity Usage 11 17 22 to 12 16 22	413.34
ACH-155	12/22/2022	Vision Service Plan - (CA)	Vision Coverage January 2023	192.78
ACH-156	12/25/2022	PITNEY BOWES GLOBAL FINANCIAL SERVICES	Postage Lease 09/27/2021 to 12/26/2022	712.56
				$ 165,523.40

I, Elaine Jeng, City Manager of Rolling Hills, California certify that the above demands are accurate and there is available in the General Fund a balance of

165,523.40 for the payment of above items.

Elaine Jeng, P.E., City Manager 01/04/2023

Agenda Item No.: 7.E
Mtg. Date: 01/09/2023

TO: **HONORABLE MAYOR AND MEMBERS OF THE CITY COUNCIL**

FROM: **CHRISTIAN HORVATH, CITY CLERK / EXECUTIVE ASSISTANT TO CITY MANAGER**

THRU: **ELAINE JENG P.E., CITY MANAGER**

SUBJECT: **APPROVE CITY COUNCIL MEETING DATES FOR CALENDAR YEAR 2023**

DATE: **January 09, 2023**

BACKGROUND:
Annually in January, the City Council establishes the meeting dates for the calendar year.

DISCUSSION:
There are no conflicts between regularly scheduled City Council meetings and holidays for calendar year 2023.

FISCAL IMPACT:
None.

RECOMMENDATION:
Approve as presented.

ATTACHMENTS:
CL_AGN_230109_CC_2023_MeetingDates.pdf

2023 City Council Meeting Dates and City Holidays

Unless otherwise noted, meetings in conflict with a holiday will be cancelled.

Scheduled Date	Holiday Conflict	Holiday Date	Re-scheduled Date/Time
January 9, 2023			
January 23, 2023			
February 13, 2023			
February 27, 2023			
March 13, 2023			
March 27, 2023			
April 10, 2023			
April 24, 2023			
May 8, 2023			
May 22, 2023			
June 12, 2023			
June 26, 2023			
July 10, 2023			
July 24, 2023			
August 14, 2023			
August 28, 2023			
September 11, 2023			
September 25, 2023			
October 9, 2023			
October 23, 2023			
November 13, 2023			
November 27, 2023			
December 11, 2023	Holiday Open House	N/A	N/A
12/XX/2023			

2023 Holidays Observed (City Hall Closed)

January 1, 2023	New Year's Day (observed)
January 16, 2023	Martin Luther King Jr. Day
February 20, 2023	President's Day
May 29, 2023	Memorial Day
July 4, 2023	Independence Day
September 4, 2023	Labor Day
November 11, 2023	Veterans Day
November 23-24, 2023	Thanksgiving Holiday
December 24, 2023	Christmas Eve (Observed)
December 25, 2023	Christmas Day

Other Holidays:

March 27 - March 31, 2023	PVPUSD Spring Break
April 5 - April 13, 2023	Passover
September 15 - 17, 2023	Rosh Hashanah
September 24 - 25, 2023	Yom Kippur

Unless otherwise noted, meetings in conflict with a holiday will be cancelled.

DRAFT 11/02/22

Agenda Item No.: 7.F
Mtg. Date: 01/09/2023

TO: **HONORABLE MAYOR AND MEMBERS OF THE CITY COUNCIL**

FROM: **CHRISTIAN HORVATH, CITY CLERK / EXECUTIVE ASSISTANT TO CITY MANAGER**

THRU: **ELAINE JENG P.E., CITY MANAGER**

SUBJECT: **APPROVE ANNUAL VENDOR LIST FOR CALENDAR YEAR 2023**

DATE: **January 09, 2023**

BACKGROUND:
Section 3.04.060 of the City's Municipal Code regarding purchasing provides that the City purchases may be made from vendors without bidding when any of the following conditions exist:

1. The amount of the purchase has a total estimated value of less than two thousand five hundred dollars ($2,500)
2. Sole source purchases such as legal advertising, utility, conferences, and Sheriff's Department services.
3. An essential or critical need requires that an order be placed with the best available source of supply due to time constraints.
4. Purchases from vendors on the City Council Approved Vendor's List.
5. If, at the discretion of the City Manager, and upon a finding supported with written documentation, it is in the City's best interest in regard to product uniformity, total cost acquisition, and/or similar considerations. These purchases must be approved by the City Manager or his/her designee.
6. Purchases made through a Cooperative Purchasing Program utilizing purchasing agreements maintained by the State, County, or other public agencies.

DISCUSSION:
Annually the City Council approves a Vendor List for the calendar year to facilitate purchases of material and services. The updated Vendor List for calendar year 2023 is comprised of vendors who have consistently provided excellent service to the City. In a competitive setting, these vendors have been historically the lowest bidders and they have proven to deliver goods and or services timely.

FISCAL IMPACT:
None.

RECOMMENDATION:
Approve as presented.

ATTACHMENTS:
VC_230109_PreferredVendorList.pdf

Vendor Name	Address	Contact	Phone	Web	Service Provided
4 Over Inc.	1225 Los Angeles Street, Glendale, CA 91204		877-782-2737	4over.com	*Printing Services*
A-1 All American Roofing Co.	22029 S. Figueroa St., Carson, CA 90745	Craig Ekberg	310-320-0224	800roofusa.com	*Roofing company*
Abila	9620 Executive Center Dr. North #200, St. Petersburg, FL 33702		800-811-0961	www.mip.com	*Accounting Software*
Amazon.com				amazon.com	*Office Supplies*
Armstrong Nursery	25225 Crenshaw Blvd., Torrance, CA 90505		(310) 326-1892		*Christmas tree*
Black Box Audio Visual Services	4757 Norelle St., Los Angeles, CA 90032	Miguel Diaz Camacho	323-899-1435	blackboxaudiovideoservices.com	*Electrician / A/V Services*
CBE Office Solutions	4 Mason, Irvine, CA 92618	Joe Graziano / Chris Hoffie	310.323.3310	www.cbesolutions.com	*Copier and office equipment supplier*
Chambers Group	5 Hutton Centre Dr., Ste. 750, Santa Ana, CA 92707			chambersgroupinc.com	*Environmental Consultant*
Civic Plus	P.O. Box 2235 Tallahassee, FL 32316	Sylvana Satterfield	800-262-2633	civicplus.com	*Online Muni Code System*
Complete Fire Services Inc.	PO Box 3804 Tustin, CA 92781		(949) 468-0363		*Fire Extinguishers*
Costco Wholesale	2640 Lomita Blvd., Torrance, CA 90505		(310) 891-1020	costco.com	*Office Supplies*
Cox Com, LLC	29947 Avenida De Las Banderas, Rancho Santa Margarita, CA 92688		(310) 891-1020 or 949-546-2406	cox.com	*Telephone / cable internet services*
Daily Breeze / Southern California News Group	PO Box 8012, Willoughby, OH 44096-8012	Pauline Fernandez	310.543.6635	publicnotices.scng.com	*Newspaper / Public Notices*
David Fairchild Studio	P.O. Box 2424 Palos Verdes Peninsula CA 90274	David Fairchild	(310) 316-5547	davidfairchildstudio.com	*Photography Services*
Dell, Inc.	One Dell Way, Round Rock, TX 78682		(800) 677-9725	Dell.com	*Computer equipment*
DFM Associates	10 Chrysler, Suite A | Irvine, CA 92618	Deborah Ferrante	949.859.8700	www.dfmassociates.com	*Election Code Updates*
Diane Gladwell	1028 Tirol Lane, Lake Arrowhead, CA 92352		(909) 337-3516		*Election consultant, records management*
Endee - Two Hands Woodworks, Inc.	2109 N Rosewood Ave. Santa Ana, CA. 92706	Noel Bonn	657-559-906	endee.art	*Specialty Items (Plaques)*
Environmental Design Associates (EDA)	14121 Sawston Circle, Westminster, CA 92683		(714) 350-6910		*Landscape Plan Review*

Executive-Suite Services	19025 Parthenia St. Suite 200, Northridge, CA 91324		818-993-6300		*Janitorial services*
Exsel Inc.	1854 West 169th Street, Unit G, Gardena, CA 90247		310.933.3012	exselusa.com	*Printing / promotional services*
File Keepers LLC	6277 East Slauson Avenue, Los Angeles, CA 90040	Lance Hom	213.250.3000	www.filekeepers.com	*Laserfiche File Retention / Storage*
Finley Tree & Land Care Service	23033 Crenshaw Blvd, Torrance, CA 90505		(310) 326-9818		*Tree trimming services, landscaping*
First Call Staffing	3511 Pacific Coast Hwy # E, Torrance, CA 90505		(310) 539-2884		*Employment agency*
iWorQ	PO Box 3784, Logan UT 84323		435-755-5126	www.iworq.net	*Planning / Code Enforcement Database*
JTL Consultant	952 Buena Vista Street, Duarte, CA 91010		(626) 358-5690		*Arborist*
Konica Minolta Business Solution, USA Inc.	Dept. LA 22988, Pasadena, CA 91185-2988		(800) 456-5664		*Copier and office equipment supplier*
Kosmont Transaction Services	1601 N. Sepulveda Blvd. #382, Manhattan Beach, CA 90266	Larry Kosmont	424-297-1070		*Financial Consultants*
Lisa's Bon Appetit	3535 Lomita Blvd Suite C, Torrance, CA 90505		(310) 784-1070		*Catering service*
Mahaffey Companies (Atlas Cesspool Service)	1800 S. Alameda St., Rancho Dominguez, Ca. 90221		(310) 605-1700		*Septic tank services*
Mark Towle	2919 W. 154th St., Gardena, CA 90249				*Bartending Services*
MCA Direct LLC	1961 E Wright Circle Anaheim, CA 92806	Erin Martin Picon	714-939-9866	mcadirect.org	*Election Materials*
Michael Baker International	3760 Kilroy Airport Way, Ste. 270, Long Beach, CA 90806		(562) 200-7165		*Plancheck, Peer Review*
Nextiva	9451 East Via de Ventura, Scottsdale, AZ 85256		800-285-7995	www.nextiva.com	*Phone Systems*
Nothing Bundt Cakes	5205 Pacific Coast HWY, Unit B/C, Torrance, CA 90505		(310) 373-2443		*Desserts*
OfficeDepot.com					*Office Supplies*
On Time Delivery	20550 Earl St. #50, Torrance, CA 90503	Howard Simon	(310) 874-7267		*Messenger Services*
Orkin	12710 Magnolia Ave., Riverside, CA 92503-4620	Jesse Jolly	(323) 244-7990		*Pest Control*

Palos Verdes Florist	910 Silver Spur Rd, Rolling Hills Estates, CA 90274		(310) 541-9994	palosverdesflorist.com	*Florist*
Palos Verdes Security Systems Inc. / Valley Alarm	804 Pico Street, San Fernando, CA 91340		800-550-2537	www.valleyalarm.com	*Security System*
Peninsula Septic	1840 S. Gaffey Street #53, San Pedro, CA 90731	Nick Dragich	(310) 832-4800		*Septic tank services*
Pitney Bowes Postage	PO Box 981026, Boston , MA 02298-1026			www.pitneybowes.com	*Postage*
Providence Health & Services	PO Box 4017, Portland, OR 97208-4017				*Pre-Employment Health Services*
PVPUSD Printing Services	375 Via Almar, Palos Verdes Estates CA 90274		310-896-3426		*Copy & stationary printing services*
Quadiaent, Inc.	Dept. 3689, PO Box 123689, Dallas, TX 75312-3689			www.quadient.com	*Finance / Account Payable*
RACE Communication	1170 Unit C, E Tehachapi Blvd., Tehachapi, CA 93561		(877) 722-3833		*Internet Communications*
Robert Half	970 West 190th St., Suite 400, Torrance, CA 90502		(800) 804-8367		*Employment agency*
Sir Speedy	900 W. 223rd St., Torrance, Ca 90502		310-212-6162	www.sirspeedysouthbay.net	*Copy / Printing Services*
Smart Source LLC.	21818 S. Wilmington Ave., Ste 406, Long Beach, CA 90810		(310) 513-2000		*Stationery*
South Bay Workforce Investment Board	11539 Hawthorne Blvd #500, Hawthorne, CA 90250	Robert Chavez	(310) 970-7700	www.sbwib.org	*Employment Resources*
Stephens Plumbing & Heating Company	616 W 6th Street, San Pedro, CA 90731		(310) 832-9009		*Plumbing and Heating*
Total Compensation System Inc.	5655 Lindero Canyon Rd #223, Westlake Village, CA 91362				*Financial Services GASB 75*
TR Trading Co.	15604 S. Broadway, Gardena, CA 90248		(310) 329-9242		*Furniture store*
Traver's Trees	P. O. Box 7000-416, Palos Verdes Peninsula, CA 90274		(310) 545-5816 or (310) 530-3920		*Tree trimming services, landscaping*
Trio Event Rental	7900 Balboa Blvd B3, Van Nuys, CA 91406		(818) 651-0602	trioeventrentals.com	*Event rentals*
Warriner Associates	47-568 Hakulhale Street, Kaneohe, HI 96744		310-378-1764		*Arborist*
Western Audio Visual	1592 N. Batavia, Ste. 2, Orange, CA, 92867	Kevin Mahkorn	(714) 637-4461	www.wav1.com	*A/V Tech and Design Services*

Worldwise Productions	20945 Devonshire St, Chatsworth, CA 91311		(877) 997-8433	wwpvideo.com	*Video Production Services*
Xerox	101 Continental Blvd. El Segundo, CA 90245	Lori Murphy	(877) 395-6318	Xerox.com	*Printers, copiers*
Yosemite Water	226 South Avenue 54, Los Angeles, CA 90025		(323) 256-2265	yosemitewaters.com	*Water delivery*

Agenda Item No.: 7.G
Mtg. Date: 01/09/2023

TO: **HONORABLE MAYOR AND MEMBERS OF THE CITY COUNCIL**

FROM: **VANESSA HEVENER, SENIOR MANAGEMENT ANALYST**

THRU: **ELAINE JENG P.E., CITY MANAGER**

SUBJECT: **APPROVE REPUBLIC SERVICES' 2023 CLEAN-UP AND COMMUNAL BIN SCHEDULE**

DATE: **January 09, 2023**

BACKGROUND:
Republic Services' annual clean-up and communal bin events were coordinated with the Rolling Hills Community Association.

DISCUSSION:
The 2023 events are scheduled as follows:

Communal Bin Events
- January 20-27
- August 4-12

Spring
- Green Waste – Wednesday, March 8th
- Bulky Items – Wednesday, March 15th
- Document Shredding & Electronic Waste Recycling – Saturday, March 25th

Fall
- Green Waste – Wednesday, October 4th
- Bulk Items – Wednesday, October 11th
- Document Shredding & Electronic Waste Recycling – Saturday, October 21st

FISCAL IMPACT:
The twice a year clean up and communal bin events are included in the franchise agreement between the City and Republic Services.

RECOMMENDATION:
Approve as presented.

ATTACHMENTS:

Agenda Item No.: 7.H
Mtg. Date: 01/09/2023

TO: **HONORABLE MAYOR AND MEMBERS OF THE CITY COUNCIL**

FROM: **JOHN SIGNO, DIRECTOR OF PLANNING & COMMUNITY SERVICES**

THRU: **ELAINE JENG P.E., CITY MANAGER**

SUBJECT: **FOR SECOND READING AND ADOPTION: ADOPT BY TITLE ONLY ORDINANCE NO. 381 AMENDING CHAPTER 17.28 OF THE ROLLING HILLS MUNICIPAL CODE REGARDING ACCESSORY DWELLING UNITS AND JUNIOR ACCESSORY DWELLING UNITS AND DETERMINING THE ORDINANCES TO BE EXEMPT FROM CEQA**

DATE: **January 09, 2023**

BACKGROUND:
On November 15, 2022, this item was recommended for approval by the Planning Commission on a 5-0 vote. On December 13, 2022, the City Council held a duly noticed public hearing, took public testimony, and closed the public hearing. At the conclusion of the hearing, the City Council adopted Ordinance No. 381-U and introduced Ordinance No. 381 for first reading amending Chapter 17.28 of the Rolling Hills Municipal Code regarding accessory dwelling units (ADUs) and junior accessory dwelling units (JADUs) and finding the action to be exempt from the California Environmental Quality Act (CEQA). Ordinance No. 381-U is an urgency ordinance that became effective immediately and became operative on January 1, 2023.

Recent ADU Laws:
In recent years, the California Legislature has approved, and the Governor has signed into law, a number of bills that impose limits on local authority to regulate accessory dwelling units ("ADUs") and junior accessory dwelling units ("JADUs"). These bills include Assembly Bills 68 and 881 and Senate Bill 13—which went into effect on January 1, 2020. The City Council previously adopted Ordinance Nos. 364U and 364, which updated the City's ADU and JADU regulations (contained in Chapter 17.28 of the Rolling Hills Municipal Code) to comply with this legislation.

Following the bills noted above, in 2020 and 2021 the California Legislature approved, and the Governor signed into law, Assembly Bill 3182 ("AB 3182") and Assembly Bill 345 ("AB 345"), respectively. Among other things, AB 3182 expanded the scenarios under which the City must allow certain ADUs and JADUs with only a building permit. AB 345 required cities to allow the separate sale or conveyance of certain ADUs that satisfy the conditions set forth in

Government Code section 65852.26. Such conditions include, among other things, that the ADU or the primary dwelling was constructed by a qualified nonprofit and the ADU is sold to a qualified low-income buyer. In August 2022, the City Council adopted Ordinance No. 376, which further amended the City's ADU and JADU regulations to comply with this legislation.

DISCUSSION:
In September 2022, the California Legislature approved, and the Governor signed into law, a new bill ("SB 897") that further amends state ADU law (i.e., Government Code sections 65852.2 and 65852.22).

Among other things, SB 897: [1]

- Requires the City to allow certain ADUs to be higher—up to 18 or 25 feet, depending the situation;
- Requires the City's front setback requirement to yield for certain ADUs;
- Requires the City to justify a denial with a full set of detailed comments describing the deficiencies in the application and explaining how to remedy them;
- Removes the automatic repeal in 2025 (now the ADU statute is permanent);
- Prohibits the City from denying an application to create an ADU solely because corrections are needed to address nonconforming zoning conditions, building code violations, or unpermitted structures elsewhere on the lot that do not present a threat to public health and safety and are not affected by the construction of the ADU; and
- In instances where a JADU will share a bathroom with the primary dwelling, the City must require the JADU to have an interior entry to the primary dwelling's "main living area," independent of the exterior entrances of the JADU and primary dwelling.

As noted above, the City's ADU and JADU regulations are codified in RHMC Chapter 17.28. Included in Attachment 1 is an ordinance ("ADU Ordinance") that amends Chapter 17.28 to comply with SB 897.

The code amendments provided in the ADU Ordinance are mandated by recent changes in state law. Consequently, staffs' recommendation is for the City Council to adopt the ADU Ordinance.

ENVIRONMENTAL IMPACT
Under California Public Resources Code section 21080.17, the California Environmental Quality Act ("CEQA") does not apply to the adoption of an ordinance by a city or county implementing the provisions of section 65852.2 of the Government Code, which is California's ADU law and which also regulates JADUs, as defined by section 65852.22. Therefore, the ADU Ordinance is statutorily exempt from CEQA in that the proposed ordinance implements state's ADU law.

[1] Both AB 2221 and SB 897 were signed into law, but AB 2221 has no effect because it would have amended the same statute that SB 897 amended, and SB 897 was signed into law (chaptered) later. AB 2221 was therefore "chaptered out." But section 2.5 of SB 897 expressly includes, among others, changes to the ADU law that would have been made by AB 2221. Ultimately, only SB 897 is effective and relevant.

FISCAL IMPACT:
The ordinance amendment brings the Municipal Code into compliance with State law which protects the City from legal challenges.

RECOMMENDATION:
Adopt by title only Ordinance No. 381, entitled, "AN ORDINANCE OF THE CITY COUNCIL OF THE CITY OF ROLLING HILLS AMENDING CHAPTER 17.28 OF THE ROLLING HILLS MUNICIPAL CODE REGARDING ACCESSORY DWELLING UNITS AND JUNIOR ACCESSORY DWELLING UNITS AND DETERMINING THE ORDINANCE TO BE EXEMPT FROM CEQA."

ATTACHMENTS:
Attachment 1 - CL_ORD_381_ADU Ordinance_D3.pdf

ORDINANCE NO. 381

AN ORDINANCE OF THE CITY COUNCIL OF THE CITY OF ROLLING HILLS AMENDING CHAPTER 17.28 OF THE ROLLING HILLS MUNICIPAL CODE REGARDING ACCESSORY DWELLING UNITS AND JUNIOR ACCESSORY DWELLING UNITS AND DETERMINING THE ORDINANCE TO BE EXEMPT FROM CEQA

WHEREAS, the City of Rolling Hills, California ("City") is a municipal corporation, duly organized under the constitution and laws of the State of California; and

WHEREAS, state law authorizes cities to act by ordinance to provide for the creation and regulation of accessory dwelling units ("ADUs") and junior accessory dwelling units ("JADUs"); and

WHEREAS, in 2019, the California Legislature approved, and the Governor signed into law a number of bills ("2019 ADU Laws") that, among other things, amended Government Code section 65852.2 and 65852.22 to impose new limits on local authority to regulate ADUs and JADUs; and

WHEREAS, in February 2020, the City Council adopted Ordinance Nos. 364U and 364, which updated the City's ADU and JADU regulations (contained in Chapter 17.28 of the Rolling Hills Municipal Code) to comply with the 2019 ADU Laws; and

WHEREAS, in August 2022, the City Council adopted Ordinance No. 376, which further amended the City's ADU and JADU regulations to comply with state law, including Assembly Bills 345 and 3182; and

WHEREAS, in September 2022, the Legislature approved, and the Governor signed into law, Senate Bill 897 ("SB 897"); and

WHEREAS, SB 897 imposed further restrictions on local authority to regulate ADUs and JADUs, including with respect to height limits, setbacks, application review and denial procedures, unpermitted structures, and JADU configurations; and

WHEREAS, this ordinance ("Ordinance") amends the City's ADU and JADU regulations to comply with SB 897; and

WHEREAS, on November 15, 2022, the Planning Commission conducted a duly noticed public hearing to consider the Ordinance, wherein it considered the staff report, supporting documents, public testimony, and all appropriate information submitted with the Ordinance. Following the public hearing, the Planning Commission recommended that the Council adopt the Ordinance; and

WHEREAS, on December 13, 2022, the City Council conducted a duly noticed public hearing to Consider the Ordinance, wherein it considered the staff report and

supporting documents, Planning Commission's recommendation, public testimony, and all appropriate information submitted with the Ordinance; and

WHEREAS, all legal prerequisites to the adoption of the Ordinance have occurred.

NOW, THEREFORE, the City Council of the City of Rolling Hills does ordain as follows:

SECTION 1. Incorporation of Recitals. The recitals above are each incorporated by reference and adopted as findings by the City Council.

SECTION 2. CEQA. Under California Public Resources Code section 21080.17, the California Environmental Quality Act ("CEQA") does not apply to the adoption of an ordinance by a city or county implementing the provisions of section 65852.2 of the Government Code, which is California's ADU law and which also regulates JADUs, as defined by section 65852.22. Therefore, the Ordinance is statutorily exempt from CEQA in that the proposed ordinance implements the State's ADU law.

SECTION 3. General Plan. This Ordinance is, as a matter of law, consistent with the City's General Plan pursuant to Government Code Section 65852.2(a)(1)(C).

SECTION 4. Code Amendments. Chapter 17.28 of the Rolling Hills Municipal Code is hereby amended and restated to read in its entirety as provided in Exhibit "A," attached hereto and incorporated herein by reference.

SECTION 5. Submittal to HCD. The City Clerk shall submit a copy of this Ordinance to the Department of Housing and Community Development within 60 days after adoption.

SECTION 6. Severability. If any provision of this Ordinance or its application to any person or circumstance is held to be invalid, such invalidity has no effect on the other provisions or applications of the Ordinance that can be given effect without the invalid provision or application, and to this extent, the provisions of this Ordinance are severable. The City Council declares that it would have adopted this Ordinance irrespective of the invalidity of any portion thereof.

SECTION 7. Effective Date**.** This Ordinance takes effect 30 days following its adoption.

SECTION 8. Certification. The City Clerk is hereby directed to certify to the passage and adoption of this Ordinance; cause the same, or a summary thereof, to be published or posted in the manner required by law.

PASSED, APPROVED and **ADOPTED** this 9th day of January, 2023.

_____
James Black, Mayor

ATTEST:

_____
Christian Horvath, City Clerk

APPROVED AS TO FORM:

_____
Patrick Donegan, City Attorney

STATE OF CALIFORNIA)
COUNTY OF LOS ANGELES) §§
CITY OF ROLLING HILLS)

I, Christian Horvath, City Clerk of the City of Rolling Hills, California, do hereby certify that the foregoing Ordinance No. 381 was adopted at a regular meeting of the City Council of the City of Rolling Hills held on the 9th day of January, 2023, by the following vote:

AYES:

NOES:

ABSENT:

ABSTAIN:

_____
Christian Horvath
City Clerk

EXHIBIT A

Amended ADU Regulations

(Follows this page)

Chapter 17.28 ACCESSORY DWELLING UNITS AND JUNIOR ACCESSORY DWELLING UNITS

17.28.010 Purpose.

The purpose of this section is to allow and regulate accessory dwelling units (ADUs) and junior accessory dwelling units (JADUs) in compliance with California Government Code Sections 65852.2 and 65852.22.

17.28.020 Effect of conforming.

An ADU or JADU that conforms to the standards in this section will not be:

A. Deemed to be inconsistent with the City's General Plan and Zoning designation for the lot on which the ADU or JADU is located.

B. Deemed to exceed the allowable density for the lot on which the ADU or JADU is located.

C. Considered in the application of any local ordinance, policy, or program to limit residential growth.

D. Required to correct a nonconforming zoning condition, as defined in Section 17.28.030(G) below. This does not prevent the City from enforcing compliance with applicable building standards in accordance with Health and Safety Code Section 17980.12.

17.28.030 Definitions.

As used in this section, terms are defined as follows:

A. "Accessory dwelling unit" or "ADU" means an attached or a detached residential dwelling unit that provides complete independent living facilities for one or more persons and is located on a lot with a proposed or existing primary residence. An accessory dwelling unit also includes the following:

   1. An efficiency unit, as defined by Section 17958.1 of the California Health and Safety Code; and

   2. A manufactured home, as defined by Section 18007 of the California Health and Safety Code.

B. "Accessory structure" means a structure that is accessory and incidental to a dwelling located on the same lot.

C. "Complete independent living facilities" means permanent provisions for living, sleeping, eating, cooking, and sanitation on the same parcel as the single-family or multifamily dwelling is or will be situated.

D. "Efficiency kitchen" means a kitchen that includes all of the following:

   1. A cooking facility with appliances.

2. A food preparation counter and storage cabinets that are of a reasonable size in relation to the size of the JADU.

E. "Junior accessory dwelling unit" or "JADU" means a residential unit that satisfies all of the following:

1. It is no more than five hundred square feet in size.

2. It is contained entirely within an existing or proposed single-family dwelling. An enclosed use within the residence, such as an attached garage, is considered to be a part of and contained within the single-family dwelling.

3. It includes its own separate sanitation facilities or shares sanitation facilities with the existing or proposed single-family dwelling.

4. If the unit does not include its own separate bathroom, then it contains an interior entrance to the main living area of the existing or proposed single-family dwelling in addition to an exterior entrance that is separate from the main entrance to the primary dwelling.

5. It includes an efficiency kitchen, as defined in subsection (D) above.

F. "Living area" means the interior habitable area of a dwelling unit, including basements and attics, but does not include a garage or any accessory structure.

G. "Nonconforming zoning condition" means a physical improvement on a property that does not conform with current zoning standards.

H. "Passageway" means a pathway that is unobstructed clear to the sky and extends from a street to one entrance of the ADU or JADU.

I. "Proposed dwelling" means a dwelling that is the subject of a permit application and that meets the requirements for permitting.

J. "Public transit" means a location, including, but not limited to, a bus stop or train station, where the public may access buses, trains, subways, and other forms of transportation that charge set fares, run on fixed routes, and are available to the public.

K. "Tandem parking" means that two or more automobiles are parked on a driveway or in any other location on a lot, lined up behind one another.

17.28.040 Approvals.

The following approvals apply to ADUs and JADUs under this section:

A. Building-permit Only. If an ADU or JADU complies with each of the general requirements in Section 17.28.050 below, it is allowed with only a building permit in the following scenarios:

1. Converted on Single-family Lot: One ADU as described in this subsection (A)(1) and one JADU on a lot with a proposed or existing single-family dwelling on it, where the ADU or JADU:

(a) Is either: within the space of a proposed single-family dwelling; within the existing space of an existing single-family dwelling; or (in the case of an ADU only) within the existing space of an accessory structure, plus up to one hundred fifty additional square feet if the expansion is limited to accommodating ingress and egress; and

(b) Has exterior access that is independent of that for the single-family dwelling; and

(c) Has side and rear setbacks sufficient for fire and safety, as dictated by applicable building and fire codes.

2. Limited Detached on Single-family Lot: One detached, new construction ADU on a lot with a proposed or existing single-family dwelling (in addition to any JADU that might otherwise be established on the lot under subsection (A)(1) above), if the detached ADU satisfies each of the following limitations:

(a) The side- and rear-yard setbacks are at least four feet.

(b) The total floor area is eight hundred square feet or smaller.

(c) The peak height above grade does not exceed the applicable height limit provided in section 17.28.050(B).

3. Converted on Multifamily Lot: One or more ADUs within portions of existing multifamily dwelling structures that are not used as livable space, including but not limited to storage rooms, boiler rooms, passageways, attics, basements, or garages, if each converted ADU complies with state building standards for dwellings. Under this subsection (A)(3), at least one converted ADU is allowed within an existing multifamily dwelling, up to a quantity equal to twenty-five percent of the existing multifamily dwelling units.

4. Limited Detached on Multifamily Lot: No more than two detached ADUs on a lot that has an existing or proposed multifamily dwelling if each detached ADU satisfies both of the following limitations:

(a) The side- and rear-yard setbacks are at least four feet. If the existing multifamily dwelling has a rear or side yard setback of less than four feet, the City will not require any modification to the multifamily dwelling as a condition of approving the ADU.

(b) The peak height above grade does not exceed the applicable height limit provided in section 17.28.050(B).

B. ADU Permit.

1. Except as allowed under subsection (A) above, no ADU may be created without a building permit and an ADU permit in compliance with the standards set forth in Section 17.28.050 and Section 17.28.060.

2. The City may charge an application fee, adopted by resolution of the City Council, to reimburse it for costs incurred in processing ADU permits.

C. Process and Timing.

1. An ADU permit is considered and approved ministerially, without discretionary review or a hearing.

2. The City must approve or deny an application to create an ADU or JADU within sixty days from the date that the City receives a completed application. If the City has not approved or denied the completed application within sixty days, the application is deemed approved unless either:

   (a) The applicant requests a delay, in which case the sixty-day time period is tolled for the period of the requested delay, or

   (b) When an application to create an ADU or JADU is submitted with a permit application to create a new single-family or multifamily dwelling on the lot, the City may delay acting on the permit application for the ADU or JADU until the City acts on the permit application to create the new single-family or multifamily dwelling, but the application to create the ADU or JADU will still be considered ministerially without discretionary review or a hearing.

3. If the City denies an application to create an ADU or JADU, the City must provide the applicant with comments that include, among other things, a list of all the defective or deficient items and a description of how the application may be remedied by the applicant. Notice of the denial and corresponding comments must be provided to the applicant within the sixty day time period established by subsection (C.2) above.

4. A demolition permit for a detached garage that is to be replaced with an ADU is reviewed with the application for the ADU and issued at the same time.

17.28.050 General ADU and JADU requirements.

The following requirements apply to all ADUs and JADUs that are approved under Section 17.28.040(A) or (B):

A. Zoning.

1. An ADU or JADU subject only to a building permit under Section 17.28.040(A) may be created on a lot in a residential or mixed-use zone.

2. An ADU or JADU subject to an ADU permit under Section 17.28.040(B) may be created on a lot that is zoned to allow single-family dwelling residential use or multifamily dwelling residential use.

B. Height.

1. Except as otherwise provided by subsections (B.2) and (B.3) below, a detached ADU created on a lot with an existing or proposed single family or multifamily dwelling unit may not exceed sixteen feet in height.

2. A detached ADU may be up to eighteen feet in height if it is created on a lot with an existing or proposed single family or multifamily dwelling unit that is

located within one-half mile walking distance of a major transit stop or a high quality transit corridor, as those terms are defined in Section 21155 of the Public Resources Code, and the ADU may be up to two additional feet in height (for a maximum of twenty feet) if necessary to accommodate a roof pitch on the ADU that is aligned with the roof pitch of the primary dwelling unit.

3. A detached ADU created on a lot with an existing or proposed multifamily dwelling that has more than one story above grade may not exceed eighteen feet in height.

4. An ADU that is attached to the primary dwelling may not exceed twenty five feet in height or the height limitation imposed by the underlying zone that applies to the primary dwelling, whichever is lower.

5. For purposes of this subsection (B), height is measured above existing legal grade to the peak of the structure.

C. Fire Sprinklers.

1. Fire sprinklers are required in an ADU if sprinklers are required in the primary residence.

2. The construction of an ADU does not trigger a requirement for fire sprinklers to be installed in the existing primary dwelling.

D. Rental Term. No ADU or JADU may be rented for a term that is shorter than thirty days. This prohibition applies regardless of when the ADU or JADU was created.

E. No Separate Conveyance. An ADU or JADU may be rented, but, except as otherwise provided in Government Code Section 65852.26, no ADU or JADU may be sold or otherwise conveyed separately from the lot and the primary dwelling (in the case of a single-family lot) or from the lot and all of the dwellings (in the case of a multifamily lot).

F. Owner Occupancy.

1. An ADU that is permitted after January 1, 2020, but before January 1, 2025, is not subject to any owner-occupancy requirement.

2. Unless applicable law requires otherwise, all ADUs that are permitted on or after January 1, 2025, are subject to an owner-occupancy requirement. A natural person with legal or equitable title to the property must reside on the property as the person's legal domicile and permanent residence.

3. As required by state law, all JADUs are subject to an owner-occupancy requirement. A natural person with legal or equitable title to the property must reside on the property, in either the primary dwelling or JADU, as the person's legal domicile and permanent residence. However, the owner-occupancy requirement of this paragraph does not apply if the property is entirely owned by another governmental agency, land trust, or housing organization.

G. Deed Restriction. Prior to issuance of a building permit for an ADU or JADU, a deed restriction must be recorded against the title of the property in the County Recorder's office and a copy filed with the Director. The deed restriction must run with the land and bind all future owners. The form of the deed restriction will be provided by the City and must provide that:

1. Except as otherwise provided in Government Code Section 65852.26, the ADU or JADU may not be sold separately from the primary dwelling.

2. The ADU or JADU is restricted to the approved size and to other attributes allowed by this chapter.

3. The deed restriction runs with the land and may be enforced against future property owners.

4. The deed restriction may be removed if the owner eliminates the ADU or JADU, as evidenced by, for example, removal of the kitchen facilities. To remove the deed restriction, an owner may make a written request of the Director, providing evidence that the ADU or JADU has in fact been eliminated. The Director may then determine whether the evidence supports the claim that the ADU or JADU has been eliminated. Appeal may be taken from the Director's determination consistent with other provisions of this Code. If the ADU or JADU is not entirely physically removed, but is only eliminated by virtue of having a necessary component of an ADU or JADU removed, the remaining structure and improvements must otherwise comply with applicable provisions of this Code.

5. The deed restriction is enforceable by the Director or his or her designee for the benefit of the City. Failure of the property owner to comply with the deed restriction may result in legal action against the property owner, and the City is authorized to obtain any remedy available to it at law or equity, including, but not limited to, obtaining an injunction enjoining the use of the ADU or JADU in violation of the recorded restrictions or abatement of the illegal unit.

H. Building and Safety.

1. **Must comply with building code**. Subject to subsection (H)(2) below, all ADUs and JADUs must comply with all local building code requirements.

2. **No change in occupancy**. Construction of an ADU does not constitute a Group R occupancy change under the local building code, as described in Section 310 of the California Building Code, unless the building official or Code Enforcement Division officer makes a written finding based on substantial evidence in the record that the construction of the ADU could have a specific, adverse impact on public health and safety. Nothing in this subsection (H)(2) prevents the City from changing the occupancy code of a space that was uninhabitable space or that was only permitted for nonresidential use and was subsequently converted for residential use in accordance with this section.

17.28.060 Specific ADU requirements.

The following requirements apply only to ADUs that require an ADU permit under Section 17.28.040(B).

A. Maximum Size.

1. The maximum size of a detached or attached ADU subject to this Section 17.28.060 is eight hundred fifty square feet for a studio or one-bedroom unit and one thousand square feet for a unit with two or more bedrooms.

2. An attached ADU that is created on a lot with an existing primary dwelling is further limited to fifty percent of the floor area of the existing primary dwelling, subject to subsection (A)(3) below.

3. Application of other development standards in this Section 17.28.060, such as FAR or lot coverage, might further limit the size of the ADU, but no application of the percentage-based size limit in subsection (A)(2) above, or of an FAR, lot coverage limit or open-space requirement may require the ADU to be smaller than eight hundred square feet.

B. Floor Area Ratio (FAR). No ADU subject to this Section 17.28.060 may cause the total FAR of the lot to exceed forty-five percent, subject to Section 17.28.060(A)(3) above.

C. Setbacks.

1. Front Yard.

(a) Subject to subsection (C)(1)(b) below, no part of any ADU subject to this Section 17.28.060 may be located within thirty feet of the front property line.

(b) If the front yard setback is the only location on the lot where an ADU may be lawfully constructed, then the ADU may encroach into the required front yard setback as necessary to enable the construction of an eight hundred square foot unit.

2. No part of any ADU subject to this Section 17.28.060 may be located within four feet of a side or rear property line.

D. Lot Coverage. No ADU subject to this Section 17.28.060 may cause the total lot coverage of the lot to exceed fifty percent, subject to Section 17.28.060(A)(3) above.

E. Minimum Open Space. No ADU subject to this Section 17.28.060 may cause the total percentage of open space of the lot to fall below fifty percent, subject to subsection Section 17.28.060(A)(3) above.

F. Passageway. No passageway, as defined by Section 17.28.030(H) above, is required for an ADU.

G. Parking.

1. Generally. One off-street parking space is required for each ADU. The parking space may be provided in setback areas or as tandem parking, as defined by Section 17.28.030(K) above.

2. Exceptions. No parking under Section 17.28.060(G.1) is required in the following situations:

   (a) The ADU is located within one-half mile walking distance of public transit, as defined in subsection Section 17.28.030(J) above.

   (b) The ADU is located within an architecturally and historically significant historic district.

   (c) The ADU is part of the proposed or existing primary residence or an accessory structure under Section 17.28.040(A)(1) above.

   (d) When on-street parking permits are required but not offered to the occupant of the ADU.

   (e) When there is an established car share vehicle stop located within one block of the ADU.

   (f) When the permit application to create an ADU is submitted with an application to create a new single-family or new multifamily dwelling on the same lot, provided that the ADU or the lot satisfies any other criteria in subsections (G.2(a) through (G.2(e) above.

3. No Replacement. When a garage, carport, or covered parking structure is demolished in conjunction with the construction of an ADU or converted to an ADU, those off-street parking spaces are not required to be replaced.

H. Architectural Requirements.

1. The materials and colors of the exterior walls, roof, and windows and doors must match the appearance and architectural design of those of the primary dwelling.

2. The roof slope must match that of the dominant roof slope of the primary dwelling. The dominant roof slope is the slope shared by the largest portion of the roof.

3. The exterior lighting must be limited to down-lights or as otherwise required by the building or fire code.

4. The ADU must have an independent exterior entrance, apart from that of the primary dwelling.

5. The interior horizontal dimensions of an ADU must be at least ten feet wide in every direction, with a minimum interior wall height of seven feet.

6. Fencing, landscaping or privacy glass may be used to provide screening and prevent a direct line of sight to contiguous residential property.

7. The architectural treatment of an ADU to be constructed on a lot that has an identified historical resource listed on the California Register of Historic

Resources must comply with all applicable ministerial requirements imposed by the Secretary of Interior.

I. Landscape Requirements.

1. Evergreen landscape screening must be planted and maintained between the ADU and adjacent parcels as follows:

(a) At least one, fifteen-gallon size plant shall be provided for every five linear feet of exterior wall. Alternatively, at least one, twenty-four-inch box size plant shall be provided for every ten linear feet of exterior wall.

(b) Plant specimens for screening must be at least eight feet tall when installed. As an alternative, a solid fence of at least eight feet in height may be installed.

2. All landscaping must be drought-tolerant.

3. All landscaping must be from the City's approved plant list.

J. Historical Protections. An ADU that is subject to this Section 17.28.060 and that is on or within six hundred feet of real property that is listed in the California Register of Historic Resources must be located so as to not be visible from any public right-of-way.

17.28.070 Fees.

The following requirements apply to all ADUs and JADUs that are approved under Section 17.28.040(A) or Section 17.28.040(B).

A. Impact Fees.

1. No impact fee is required for an ADU that is less than seven hundred fifty square feet in size. For purposes of this Section 17.28.070, "impact fee" means a "fee" under the Mitigation Fee Act (Gov. Code § 66000(b)) and a fee under the Quimby Act (Gov. Code § 66477). "Impact fee" here does not include any connection fee or capacity charge for water or sewer service.

2. Any impact fee that is required for an ADU that is seven hundred fifty square feet or larger in size must be charged proportionately in relation to the square footage of the primary dwelling unit. (E.g., the floor area of the ADU divided by the floor area of the primary dwelling, times the typical fee amount charged for a new dwelling.)

B. Utility Fees.

1. If an ADU is constructed with a new single-family home, a separate utility connection directly between the ADU and the utility and payment of the normal connection fee and capacity charge for a new dwelling are required.

2. Except as described in subsection 17.28.070(B)(1), converted ADUs on a single-family lot that are created under Section 17.28.040(A)(1) above are

not required to have a new or separate utility connection directly between the ADU and the utility. Nor is a connection fee or capacity charge required.

3. Except as described in Section 17.28.070(B)(1), all ADUs not covered by Section 17.28.070(B)(2) above require a new, separate utility connection directly between the ADU and the utility.

   (a) The connection is subject to a connection fee or capacity charge that is proportionate to the burden created by the ADU based on either the floor area or the number of drainage-fixture units (DFU) values, as defined by the Uniform Plumbing Code, upon the water or sewer system.

   (b) The portion of the fee or charge that is charged by the City may not exceed the reasonable cost of providing this service.

17.28.080 Nonconforming Zoning Code Conditions, Building Code Violations, and Unpermitted Structures.

A. **Generally**. The City will not deny an ADU or JADU application due to a nonconforming zoning condition, building code violation, or unpermitted structure on the lot that does not present a threat to the public health and safety and that is not affected by the construction of the ADU or JADU.

B. **Unpermitted ADUs constructed before 2018**.

1. **Permit to Legalize**. As required by state law, the City may not deny a permit to legalize an existing but unpermitted ADU that was constructed before January 1, 2018, if denial is based on either of the following grounds:

   (a) The ADU violates applicable building standards; or

   (b) The ADU does not comply with state ADU law (Government Code Section 65852.2) or this ADU ordinance (Chapter 17.28).

2. **Exceptions**.

   (a) Notwithstanding subsection (B.1) above, the City may deny a permit to legalize an existing but unpermitted ADU that was constructed before January 1, 2018, if the City makes a finding that correcting a violation is necessary to protect the health and safety of the public or of occupants of the structure.

   (b) Subsection (B.1) above does not apply to a building that is deemed to be substandard in accordance with California Health and Safety Code section 17920.3.

17.28.090 Nonconforming ADUs and discretionary approval.

Any proposed ADU or JADU that does not conform to the objective standards set forth in Section 17.28.010 through Section 17.28.080 of this chapter may be allowed by the City with a conditional use permit, in accordance with the other provisions of this title.

Agenda Item No.: 7.I
Mtg. Date: 01/09/2023

TO: **HONORABLE MAYOR AND MEMBERS OF THE CITY COUNCIL**

FROM: **JOHN SIGNO, DIRECTOR OF PLANNING & COMMUNITY SERVICES**

THRU: **ELAINE JENG P.E., CITY MANAGER**

SUBJECT: **FOR SECOND READING AND ADOPTION: ADOPT BY TITLE ONLY ORDINANCE NO. 382 AMENDING TITLE 15 (BUILDINGS AND CONSTRUCTION) OF THE ROLLING HILLS MUNICIPAL CODE AND DETERMINING THE ORDINANCE EXEMPT FROM CEQA**

DATE: **January 09, 2023**

BACKGROUND:
On December 13, 2022, the City Council held a public hearing, took public testimony, and closed the public hearing. At the conclusion of the hearing, the City Council, on a 5-0 vote, adopted Ordinance No. 382-U and introduced Ordinance No. 382 adopting by reference Titles 26, 27, 28, 29, 30,31, and 33 of the Los Angeles County Code and making amendments to said codes, and finding the action exempt from the California Environmental Quality Act (CEQA). Ordinance No. 382-U is an urgency ordinance that took effect on January 1, 2023.

California Building Standards Commission

Every three years, the California Building Standards Commission, together with other state agencies (e.g., the Department of Housing and Community Development), updates the State's building standards by adopting a new edition of the California Building Standards Code ("CBSC"). The CBSC consists of multiple building codes codified in Title 24 of the California Code of Regulations (these include the state building code, residential code, electrical code, plumbing code, mechanical code, fire code, energy code, and green building code). Effective January 1, 2023, these building standards apply to all building occupancies throughout the state, whether or not they are adopted by a local jurisdiction. Cities and counties, however, will typically pass ordinances adopting the CBSC by reference for the purpose of amending the state standards in accordance with local conditions and to adopt administrative provisions (e.g., fees, remedies for code violations, etc.).

Local amendments must be specific to each edition of the CBSC. State law also provides that cities and counties may adopt amendments to the state building standards only if the local governing body (i.e., the City Council) finds that such modifications or changes are reasonably necessary because of local climatic, geological or topographical conditions, and if the local

amendments are at least as restrictive as the state standards. (Administrative provisions that do not establish building standards may be enacted without necessity findings.)

Traditionally, the City of Rolling Hills has adopted the CBSC as adopted and amended by Los Angeles County. On November 15, 2022, the County Board of Supervisors adopted the new codes with local amendments, effective January 1, 2023.

DISCUSSION:

Ordinance No. 382 largely functions to adopt the current editions of the codes, readopt previously adopted City amendments that continue to apply to local building conditions, and delete or otherwise clean up those provisions of Rolling Hills Municipal Code (RHMC) Title 15 that are obsolete or duplicative of the State and County codes.

Environmental Review

This ordinance is not a project within the meaning of Section 15378 of the California Environmental Quality Act ("CEQA") Guidelines because it has no potential for resulting in physical change to the environment. Most of the terms of the building standards in the proposed Ordinance are dictated by the California Buildings Standards Code and county amendments to the state standards only make those modifications necessary for local regional conditions which are at least as protective of the environment as the state codes. City-specific amendments are limited to creating administrative processes for local enforcement of the state building standards. Alternatively, even if the ordinance is a project within the meaning of CEQA, its adoption is exempt from CEQA under the general rule that CEQA only applies to projects that may cause significant adverse effects on the environment. Pursuant to CEQA Guideline section 15061(b)(3), as this ordinance is largely administrative in nature, there is no possibility that the City's action would adversely affect the environment in any manner that could be significant.

FISCAL IMPACT:

Building plan check and permit fees are paid to compensate the City for expenditures associated with these activities. As the changes in the Codes are minor, the fees collected will continue to match the expenditures, and there will be no net fiscal impact to the City.

RECOMMENDATION:

It is recommended that the City Council waive full reading and adopt Ordinance No. 382 amending Title 15 regarding Building and Construction.

ATTACHMENTS:

ATTACHMENT 1 - CL_ORD_382_BuildingCodeOrdinance_D2.pdf

ORDINANCE NO. 382

AN ORDINANCE OF THE CITY COUNCIL OF THE CITY OF ROLLING HILLS ADOPTING BY REFERENCE TITLE 26 OF THE LOS ANGELES COUNTY CODE INCORPORATING THE CALIFORNIA BUILDING CODE, 2022 EDITION; TITLE 27 OF THE LOS ANGELES COUNTY CODE INCORPORATING THE CALIFORNIA ELECTRICAL CODE, 2022 EDITION; TITLE 28 OF THE LOS ANGELES COUNTY CODE INCORPORATING THE CALIFORNIA PLUMBING CODE, 2022 EDITION; TITLE 29 OF THE LOS ANGELES COUNTY CODE INCORPORATING THE CALIFORNIA MECHANICAL CODE, 2022 EDITION; TITLE 30 OF THE LOS ANGELES COUNTY CODE INCORPORATING THE CALIFORNIA RESIDENTIAL CODE, 2022 EDITION; TITLE 31 OF THE LOS ANGELES COUNTY CODE INCORPORATING THE CALIFORNIA GREEN BUILDING STANDARDS CODE, 2022 EDITION; TITLE 33 OF THE LOS ANGELES COUNTY CODE INCORPORATING THE CALIFORNIA EXISTING BUILDING CODE, 2022 EDITION; MAKING AMENDMENTS TO SAID CODES; AND FINDING THE ACTION EXEMPT FROM THE CALIFORNIA ENVIRONMENTAL QUALITY ACT

THE CITY COUNCIL OF THE CITY OF ROLLING HILLS DOES ORDAIN AS FOLLOWS:

Section 1. Title 15 (Buildings and Construction) of the City of Rolling Hills Municipal Code is amended to read as follows:

"Title 15 – BUILDINGS AND CONSTRUCTION

Chapter 15.04 BUILDING CODE

Sections

15.04.010 Adoption of Building Code.

Except as hereinafter provided, Title 26, Building Code, of the Los Angeles County Code, as amended and in effect on January 1, 2023, adopting the California Building Code, 2022 Edition (Part 2 of Title 24 of the California Code of Regulations) is hereby adopted and incorporated by reference, as if fully set forth below, and shall be known and may be cited as the Building Code of the City of Rolling Hills.

In the event of any conflict between provisions of the California Building Code, 2022 Edition, Title 26 of the Los Angeles County Code, or any amendment to the Building Code contained in the Rolling Hills Municipal Code, the provision contained in the later listed document shall control.

A copy of Title 26 of the Los Angeles County Code and the California Building Code, 2022 Edition, have been deposited in the office of the City Clerk of the City of

Rolling Hills and shall be at all times maintained by the City Clerk for use and examination by the public.

15.04.020 Short title.

This chapter shall be known as the "Building Code of the City of Rolling Hills" and will be referred to herein as "this code."

15.04.030 Section 105 amended.

Section 105 of the Building Code is amended to add a new subsection 105.7 to read:

> 105.7 Review Hearing. The City Council of the City of Rolling Hills may conduct a public hearing to review any decision or order of the Board of Appeals, the Code Enforcement Appeals Board, or the Building Rehabilitation Appeals Board upon an affirmative vote of three members of the City Council within thirty (30) calendar days of the decision or order. The City Council may, upon conclusion of the public hearing, sustain or reverse in whole or in part any said action or order. Notice of the City Council public hearing shall be given by the City Clerk not less than ten (10) days prior to the hearing by first class mail to all property owners within 1,000 feet of the exterior boundaries of the subject property and all owners of record of the subject property at the time of mailing said notice.

15.04.040 Definitions.

Whenever any of the following names or terms are used in the California Building Code or the County of Los Angeles Building Code, each such name or term shall be deemed and construed to have the meaning ascribed to it in this section, as follows:

"Board of Appeals" means the Board of Appeals established by Section 105 of said Los Angeles County Building Code.

"Building department" means the entities charged by resolution of the City Council with the responsibility of administering the building code for the City.

"Building official" means the persons charged by resolution of the City Council with the responsibility of administering the building code for the City.

"City" means the City of Rolling Hills.

"City Engineer" means the persons charged by resolution of the City Council with the responsibility of performing the functions of city engineer for the City.

"County," "County of Los Angeles" or "unincorporated territory of the County of Los Angeles" means the City of Rolling Hills.

"Electrical Code" means Chapter 15.16 of this code.

"Existing Building Code" means Chapter 15.24 of this code.

"Fire Code" means Chapter 15.20 of this code.

"Fire zone" means the fire zone adopted by an ordinance creating and establishing fire zones or where no such fire zones have been adopted by the City of Rolling Hills, shall mean very high fire hazard severity zone (VHFHSZ).

"General fund" means the City Treasury of the City of Rolling Hills.

"Green Building Standards Code" means Chapter 15.22 of this code.

"Health Code" or "Los Angeles County Health Code" means Chapter 8.04 of this code.

"Health Officer" means the Health Officer of the City of Rolling Hills.

"Mechanical Code" means Chapter 15.12 of this code.

"Plumbing Code" means Chapter 15.08 of this code.

"Residential Code" means Chapter 15.18 of this code.

15.04.050 Fees.

Notwithstanding the provisions of Section 15.04.010, the Building Code is amended by increasing the amount of each and every fee set forth in the Building Code, to a sum set by resolution of the City Council, including a park and recreation fee.

15.04.060 Section 202 amended.

Section 202 of the Building Code, regarding the definition of a basement, is amended to read as follows:

> BASEMENT is any floor level below the first story of the primary residence, including an attached garage. Except for walls within light wells, basement walls across any elevation may not exceed a height of five (5) feet above finished grade at any point immediately adjacent to the basement exterior, and shall have no greater than an average of two and one-half (2½) feet exterior height. Basement well(s) shall be incorporated into the overall design of the building so that it does not give an appearance of a separate story.

15.04.070 Section 202 amended.

Section 202 of the Building Code, regarding the definition of a story, is amended to read as follows:

STORY is that portion of a building included between the upper surface of any floor and the ceiling or roof above it. There shall be no story on top of another, except as permitted in Section 17.16.080 of the Zoning Ordinance.

15.04.080 Amending Appendix J Grading, Section J103 PERMITS REQUIRED.

Section J103.2, Exemption 8, is amended to read as follows:

8. An excavation that does not exceed 50 cubic yards and complies with one of the following conditions and as shown in Figure J103.2:

(a) Is less than 2 feet (0.6 m) in depth.

(b) Does not create a cut slope greater than 5 feet (1.5 m) measured vertically upward from the cut surface to the surface of the natural grade and is not steeper than 2 units horizontal to 1 unit vertical (50 percent slope).

Section J103.2, Exemption 9, is amended to read as follows:

9. A fill not intended to support a structure that does not obstruct a drainage course and complies with one of the following conditions and as shown in Figure J103.2:

(a) Is less than 1 foot (0.3 m) in depth and is placed on natural terrain with a slope flatter than 5 units horizontal to 1 unit vertical (20 percent slope).

(b) Is less than 3 feet (0.9 m) in depth at its deepest point measured vertically upward from natural grade to the surface of the fill, does not exceed 50 cubic yards, and creates a fill slope no steeper than 2 units horizontal to 1 unit vertical (50 percent slope).

(c) Is less than 5 feet (1.5 m) in depth at its deepest point measured vertically upward from natural grade to the surface of the fill, does not exceed 20 cubic yards, and creates a fill slope no steeper than 2 units horizontal to 1 unit vertical (50 percent slope).

Section J103.6 Compliance with Zoning Code is amended to read as follows:

The Building Official may refuse to issue a grading permit for work on a site if either the proposed grading or the proposed land use for the site shown on the grading plan application does not comply with the provisions of Title 17 of the Rolling Hills Municipal Code (Zoning).

15.04.090 Amending Section J106.1 Maximum cut slopes.

The slope of cut surfaces shall be no steeper than is safe for the intended use and shall be no more than one unit vertical to two units horizontal (50 percent slope), unless the owner, or the owner's authorized agent, receives a variance for a steeper slope from the Planning Commission of the City of Rolling Hills and furnishes a geotechnical or an engineering geology report, or both, justifying a steeper slope. The reports must contain a statement by the Geotechnical Engineer or Engineering Geologist that the site was investigated and an opinion that a steeper slope will be stable and will not create a hazard to public or private property, in conformance with the requirements of Section 111. Notwithstanding the provisions of this section, the Building Official may require the slope of cut surfaces to be less than 50 percent, if the Building Official finds it necessary for the stability and safety of the slope.

Exceptions:

The slope of a cut surface may be permitted to be as steep as 1.5 units horizontal to one unit vertical (67 percent) only if all of the following conditions are met:

1. It is not intended to support structures or surcharges.

2. It is approved by the Planning Commission of the City of Rolling Hills.

3. It is adequately protected against erosion.

4. It is no more than 8 feet (2438 mm) in height.

5. It is approved by the Building Official.

6. Ground water is not encountered.

15.04.100 Section J106.2 added.

Section J106 is amended to add subsection J106.2 to read as follows:

Section J106.2 DRIVEWAYS. Driveways which provide access from any lot or parcel of land to any of the private roads in the City of Rolling Hills which are maintained by the Rolling Hills Community Association shall be so constructed that the first twenty (20) feet of said driveway, measured from the edge of the paved portion of said private road, shall not be steeper in grade than seven percent (7%). All new and relocated driveways require approval of the City of Rolling Hills Traffic Commission prior to construction.

15.04.110 Section J106.3 added.

Section J106 is amended to add subsection J106.3 to read as follows:

J106.3 BALANCED CUT AND FILL RATIO

Adherence to balanced cut and fill ratio is an important policy of the City and furthers the goals and objectives of its General Plan, except that export of soil generated from construction of basements and other excavation activities, promotes the preservation of natural terrain of the property. A project, which does not include excavation, may deviate from balanced cut and fill only under unusual circumstances related to the size, shape, topography or other physical conditions of the property that qualify it for a variance pursuant to Municipal Code Section 17.38.050.

1. No import of soil shall be permitted to any lot in the City, except where a variance pursuant to Chapter 17.38 has been approved.

2. No export of soil shall be permitted from any lot in the City, except where the soil is generated from an excavation activity, as defined in Municipal Code Section 17.12.050 or where a variance pursuant to Chapter 17.38 has been approved. Export of soil must comply with City refuse diversion requirements.

3. No grading plan for which a permit is required shall be approved unless the amount of soil to be cut from the site equals the amount of soil to be filled on the site, except where the soil is generated from an excavation activity or where a variance pursuant to Chapter 17.38 has been approved.

4. The City Manager, or his or her designee, may grant an exception to the requirements of parts 1 and 2 of this subsection to allow for the import or export of soil not to exceed 500 cubic yards if he or she finds, based upon written reports and other information submitted, that all of the following conditions are present:

(a) The project does not require discretionary review (a cut that is three feet or less, or a fill that is three feet or less and where the activity covers 2,000 square feet or less of surface area), and

(b) That the need to import or export the soil could not have been foreseen prior to commencement of construction.

5. The City Manager or his or her designee may grant an exception to the requirements of parts 1 and 2 of this subsection to allow for the import or export of soil not to exceed 500 cubic yards for remedial repair of the lot that has eroded, and of hillside or trail if he or she finds, based upon written reports and other information submitted, that all of the following conditions are present:

(a) The project does not require discretionary review (a cut that is three feet or less, or a fill that is three feet or less and where the activity covers 2,000 square feet or less of surface area);

(b) The import or export of soil is no greater than necessary to avoid a threat of land subsidence or other imminent danger; and

(c) A professionally prepared drainage plan for permanent repair shall be required if the erosion is re-occurring and if/when the amount of dirt requested, when added to the amount of dirt used in previous years, exceeds a total of 500 cubic yards.

15.04.120 Amending Section J107.6 Maximum Slope.

The slope of fill surfaces shall be no steeper than is safe for the intended use. Fill slopes steeper than 1 unit vertical to 2 units horizontal (50 percent slope) shall not be permitted unless the owner receives a variance for a steeper fill slope from the Planning Commission of the City of Rolling Hills, pursuant to the provisions of Title 17 of the Municipal Code. Such slopes shall be justified by geotechnical reports conforming with the requirements of Section 111, containing a statement by the Geotechnical Engineer that the site has been investigated and an opinion that a steeper fill slope will be stable and will not create a hazard to public or private property. Substantiating calculations and supporting data may be required where the Building Official determines that such information is necessary to verify the stability and safety of the proposed slope. The Building Official may require the fill slope to be constructed with a face flatter in slope than 2 units horizontal to 1 unit vertical (50 percent slope) if the Building Official finds it necessary for stability and safety of the slope.

15.04.130 Section J107.10 added.

Section J107, FILLS, is amended by adding subsection J107.10 to read as follows:

J107.10 BALANCED CUT AND FILL RATIO

Adherence to balanced cut and fill ratio is an important policy of the City and furthers the goals and objectives of its General Plan, except that export of soil generated from construction of basements and other excavation activities, promotes the preservation of natural terrain of the property. A project, which does not include excavation, may deviate from balanced cut and fill only under unusual circumstances related to the size, shape, topography or other physical conditions of the property that qualify it for a variance pursuant to Municipal Code Section 17.38.050.

1. No import of soil shall be permitted to any lot in the City, except where a variance pursuant to Chapter 17.38 has been approved.

2. No export of soil shall be permitted from any lot in the City, except where the soil is generated from an excavation activity, as defined in Municipal Code Section 17.12.050 or where a variance pursuant to Chapter 17.38 has been approved. Export of soil must comply with City refuse diversion requirements.

3. No grading plan for which a permit is required shall be approved unless the amount of soil to be cut from the site equals the amount of soil to be filled on

the site, except where the soil is generated from an excavation activity or where a variance pursuant to Chapter 17.38 has been approved.

4. The City Manager, or his or her designee, may grant an exception to the requirements of parts 1 and 2 of this subsection to allow for the import or export (other than from excavation activities), of soil not to exceed 500 cubic yards if he or she finds, based upon written reports and other information submitted, that all of the following conditions are present:

(a) Construction of a structure on the lot or parcel has commenced,

(b) That the need to import or export the soil could not have been foreseen prior to commencement of construction, and

(c) That either the structure, as approved, cannot be completed without the requested import or export of soil or that an emergency condition exists due to the threat of land subsidence or other imminent danger.

5. The City Manager or his or her designee may grant an exception to the requirements of parts 1 and 2 of this subsection to allow for the import or export of soil not to exceed 500 cubic yards for remedial repair of an area of the lot that has eroded, is on a hillside or a trail if he or she finds, based upon written reports and other information submitted, that all of the following conditions are present:

(a) The project does not require discretionary review (a cut that is three feet or less, or a fill that is three feet or less and where the activity covers 2,000 square feet or less of surface area).

(b) The import or export of soil is no greater than necessary to avoid a threat of land subsidence or other imminent danger.

(c) A professionally prepared drainage plan for permanent repair shall be required if the erosion is re-occurring and if/when the amount of dirt requested, when added to the amount of dirt used in previous years, exceeds a total of 500 cubic yards.

15.04.140 Amending Section J101.2 Flood Hazard areas.

Notwithstanding the provisions of Section 15.04.010 of this chapter, the Building Code is amended by requiring that in addition to Section J101.2, all new construction and substantial improvements proposed to be built in a flood-prone area, as determined in accordance with Section 8.36.050 of the Rolling Hills Municipal Code (RHMC), is subject to the floodplain management regulations set forth in Chapter 8.36 of the RHMC.

15.04.150 Violations and penalties.

A. It is unlawful for any person to erect, construct, enlarge, alter, repair, move, improve, remove, convert, demolish, equip, use, occupy or maintain any building or structure or portion thereof or perform any grading in the City of Rolling Hills, or cause the same to be done, contrary to or in violation of any of the provisions of this code.

B. Penalty. Any person, firm or corporation violating any of the provisions of this code shall be guilty of a misdemeanor, and each such person shall be guilty of a separate offense for each and every day or portion thereof during which any violation is committed, continued or permitted. Upon conviction, such person may be punished by a fine not to exceed one thousand dollars or by imprisonment in the County Jail for a period of not more than six months, or by both such fine and imprisonment. The provisions of this Section are in addition to and independent of any other sanctions, penalties or costs which are or may be imposed for a violation of any of the provisions of this code.

Chapter 15.08 PLUMBING CODE

Sections:

15.08.010 Adoption of Plumbing Code.

Except as hereinafter provided, Title 28, Plumbing Code, of the Los Angeles County Code, as amended and in effect on January 1, 2023, adopting the California Plumbing Code, 2022 Edition (Part 5 of Title 24 of the California Code of Regulations), is hereby adopted and incorporated by reference, as if fully set forth below, and shall be known and may be cited as the Plumbing Code of the City of Rolling Hills.

In the event of any conflict between provisions of the California Plumbing Code, 2022 Edition, Title 28 of the Los Angeles County Code, or any amendment to the Plumbing Code contained in the Rolling Hills Municipal Code, the provision contained in the later listed document shall control.

A copy of Title 28 of the Los Angeles County Code and the California Plumbing Code, 2022 Edition, has been deposited in the office of the City Clerk of the City of Rolling Hills and shall be at all times maintained by the City Clerk for use and examination by the public.

15.08.020 Definitions.

Whenever any of the following names of terms are used in the California Plumbing Code and the Los Angeles County Plumbing Code, each such name or term shall be deemed and construed to have the meaning ascribed to it in this section, as follows:

"City" means the City of Rolling Hills.

"County," "County of Los Angeles" or "unincorporated territory of the County of Los Angeles" means the City of Rolling Hills.

15.08.030 Fees.

Notwithstanding the provisions of Section 15.08.010, the Plumbing Code is amended by increasing the amount of each and every fee set forth in the Plumbing Code to a sum set by resolution of the City Council.

15.08.040 Violations and penalties.

Every person, firm, or corporation violating any of the provisions of the Plumbing Code of the City of Rolling Hills shall be guilty of a misdemeanor, and each such person shall be guilty of a separate offense for each and every day or portion thereof during which any violation is committed, continued, or permitted. Upon conviction, such person may be punished by a fine not to exceed one thousand dollars or by imprisonment in the County Jail for a period of not more than six months, or by both such fine and imprisonment.

The provisions of this section are in addition to and independent of any sanctions, penalties or costs which are or may otherwise be imposed for a violation of the Rolling Hills Municipal Code.

Chapter 15.12 MECHANICAL CODE

Sections:

15.12.010 Adoption of Mechanical Code.

Except as hereinafter provided, Title 29, Mechanical Code, of the Los Angeles County Code, as amended and in effect on January 1, 2023, adopting the California Mechanical Code, 2022 Edition (Part 4 of Title 24 of the California Code of Regulations) is hereby adopted and incorporated by reference, as if fully set forth below, and shall be known and may be cited as the Mechanical Code of the City of Rolling Hills.

In the event of any conflict between provisions of the California Mechanical Code, 2022 Edition, Title 29 of the Los Angeles County Code, or any amendment to the Mechanical Code contained in the Rolling Hills Municipal Code, the provision contained in the later listed document shall control.

A copy of Title 29 of the Los Angeles County Code and the California Mechanical Code, 2022 Edition, have been deposited in the office of the City Clerk of the City of Rolling Hills and shall be at all times maintained by the City Clerk for use and examination by the public.

15.12.020 Definitions.

Whenever any of the following names or terms are used in the California Mechanical Code or the County of Los Angeles Mechanical Code, each such name or term shall be deemed and construed to have the meaning ascribed to it in this section, as follows:

"City" means the City of Rolling Hills.

"County," "County of Los Angeles" or "unincorporated territory of the County of Los Angeles" means the City of Rolling Hills.

15.12.030 Fees.

Notwithstanding the provisions of Section 15.12.010, the Mechanical Code is amended by increasing the amount of each and every fee set forth in the Mechanical Code to a sum set by resolution of the City Council.

15.12.040 Violations and penalties.

A. It shall be unlawful for any person, firm, or corporation to erect, install, alter, repair, relocate, add to, replace, use or maintain heating, ventilating, cooling, or refrigeration equipment in the jurisdiction, or cause the same to be done, contrary to or in violation of any of the provisions of Mechanical Code of the City of Rolling Hills. Maintenance of equipment which was unlawful at the time it was installed, and which would be unlawful under this Code if installed after the effective date of this Code, shall constitute a continuing violation of this Code.

B. Any person, firm or corporation violating any of the provisions of the Mechanical Code of the City of Rolling Hills shall be guilty of a misdemeanor, and each such person shall be guilty of a separate offense for each and every day or portion thereof during which any violation is committed, continued, or permitted. Upon conviction, such person may be punished by a fine not to exceed one thousand dollars or by imprisonment in the County Jail for a period of not more than six months, or by both such fine and imprisonment. The provisions of this section are in addition to and independent of any sanctions, penalties or costs which are or may otherwise be imposed for a violation of the Rolling Hills Municipal Code.

Chapter 15.16 ELECTRICAL CODE

Sections:

15.16.010 Adoption of Electrical Code.

Except as hereinafter provided, Title 27, Electrical Code, of the Los Angeles County Code, as amended and in effect on January 1, 2023, adopting the California

Electrical Code, 2022 Edition (Part 3 of Title 24 of the California Code of Regulations) is hereby adopted and incorporated by reference, as if fully set forth below, and shall be known and may be cited as the Electrical Code of the City of Rolling Hills.

In the event of any conflict between provisions of the California Electrical Code, 2022 Edition, Title 27 of the Los Angeles County Code, or any amendment to the Electrical Code contained in the Rolling Hills Municipal Code, the provision contained in the later listed document shall control.

A copy of Title 27 of the Los Angeles County Code and the California Electrical Code, 2022 Edition, have been deposited in the office of the City Clerk of the City of Rolling Hills and shall be at all times maintained by the City Clerk for use and examination by the public.

15.16.020 Definitions.

Notwithstanding the provisions of Section 15.16.010 of this chapter, whenever any of the following names or terms are used in the Electrical Code, each such name or term shall be deemed and construed to have the meaning ascribed to it in this section as follows:

"City" means the City of Rolling Hills.

"County," "County of Los Angeles" or "unincorporated area of the County of Los Angeles" means the City of Rolling Hills.

15.16.030 Electrical Code fees.

Notwithstanding the provisions of Section 15.16.010, fees for plan check, inspection, and all other miscellaneous services shall be based on the fee schedule set forth by Title 27 of the Los Angeles County Code, Fees, as approved by resolution of the City Council.

15.16.040 Violations and penalties.

Every person, firm, or corporation violating any of the provisions of the Plumbing Code of the City of Rolling Hills shall be guilty of a misdemeanor, and each such person shall be guilty of a separate offense for each and every day or portion thereof during which any violation is committed, continued, or permitted. Upon conviction, such person may be punished by a fine not to exceed one thousand dollars or by imprisonment in the County Jail for a period of not more than six months, or by both such fine and imprisonment.

The provisions of this section are in addition to and independent of any sanctions, penalties or costs which are or may otherwise be imposed for a violation of the Rolling Hills Municipal Code.

Chapter 15.18 RESIDENTIAL CODE

Sections:

15.18.010 Adoption of Residential Code.

Except as herein provided, Title 30, Residential Code, of the Los Angeles County Code, as amended and in effect on January 1, 2023, adopting the California Residential Code, 2022 Edition (Part 2.5 of Title 24 of the California Code of Regulations) is hereby adopted and incorporated by reference, as if fully set forth below, and shall be known and may be cited as the Residential Code of the City of Rolling Hills.

In the event of any conflict between provisions of the California Residential Code, 2022 Edition, Title 30 of the Los Angeles County Code, or any amendment to the Residential Code contained in the Rolling Hills Municipal Code, the provision contained in the later listed document shall control.

A copy of Title 30 of the Los Angeles County Code and the California Residential Code, 2022 Edition, have been deposited in the office of the City Clerk of the City of Rolling Hills and shall be at all times maintained by the City Clerk for use and examination by the public.

15.18.020 Definitions.

Notwithstanding the provisions of Section 15.18.010, names or terms that are used in this code shall be deemed and construed to have the meaning ascribed to it in Section 15.04.040 of Title 15 of the Rolling Hills Municipal Code.

15.18.040 Fees.

Notwithstanding the provisions of Section 15.18.010, the fees set forth for this code shall be the same as the fees prescribed for the Building Code in Section 15.04.050 of Title 15 of the Rolling Hills Municipal Code.

15.18.050 Violations and penalties.

A. It is unlawful for any person to erect, construct, enlarge, alter, repair, move, improve, remove, convert, demolish, equip, use, occupy or maintain any building or structure or perform any grading in the City, or cause the same to be done, contrary to or in violation of any of the provisions of the Residential Code of the City of Rolling Hills.

B. Penalty. Any person, firm or corporation violating any of the provisions of this code shall be guilty of a misdemeanor, and each such person shall be guilty of a separate offense for each and every day or portion thereof during which any violation is committed, continued or permitted. Upon conviction, such person may

be punished by a fine not to exceed one thousand dollars or by imprisonment in the County Jail for a period of not more than six months, or by both such fine and imprisonment. The provisions of this Section are in addition to and independent of any other sanctions, penalties or costs which are or may be imposed for a violation of any of the provisions of this code.

Chapter 15.20 FIRE CODE*

Sections:

15.20.010 Adoption of Fire Code.

Except as hereinafter provided in this chapter, California Fire Code, 2022 Edition (Part 9 of Title 24 of the California Code of Regulations), based on the International Fire Code, 2021 Edition, is hereby adopted by reference and shall constitute and may be cited as the Fire Code of the City of Rolling Hills.

In the event of any conflict between provisions of the California Fire Code, 2022 Edition, Title 32 of the Los Angeles County Code, or any amendment to the Fire Code contained in the Rolling Hills Municipal Code, the provision contained in the later listed document shall control.

A copy of the California Fire Code, 2022 Edition, has been deposited in the office of the City Clerk and shall be at all times maintained by the Clerk for use and examination by the public.

15.20.020 Short title.

This chapter shall be known as the "Fire Code of the City of Rolling Hills" and may be cited as such.

15.20.025 Very high fire hazard severity zone (VHFHSZ).

The entire City of Rolling Hills is designated as a very high fire hazard severity zone, as prescribed by the Director of California Department of Forestry and Fire Protection and as designated on a map titled City of Rolling Hills VHFHSZ dated July 1, 2008, and which shall be retained on file in the City Clerk's office at the Rolling Hills City Hall.

15.20.030 Permits.

Any permit heretofore issued by the County of Los Angeles pursuant to the Fire Code of said County, for work within the territorial boundaries of the City of Rolling Hills, shall remain in full force and effect according to its terms.

15.20.035 Reserved.

15.20.040 Local amendments—Reserved.

15.20.050 Violations.

Every person violating any provision of the Fire Code or of any permit or license granted hereunder, or any rule, regulation or policy promulgated pursuant hereto, is guilty of a misdemeanor unless such violation is declared to be an infraction by the Fire Code. Each such violation is a separate offense for each and every day during any portion of which such violation is committed, continued or permitted, and conviction of any such violation shall be punishable by a fine not to exceed one thousand dollars or by imprisonment in the County Jail for a period not to exceed six months, or by both such fine and imprisonment.

15.20.060 Responsibility.

Any person who personally or through another willfully, negligently, or in violation of law sets a fire, allows a fire to be set, or allows a fire kindled or attended by such person to escape from his or her control, allows any hazardous material to be handled, stored or transported in a manner not in accordance with nationally recognized standards, allows any hazardous material to escape from his or her control, neglects to properly comply with any written notice of the Chief, or willfully or negligently allows the continuation of a violation of the Fire Code and amendments thereto is liable for the expense of fighting the fire or for the expenses incurred during a hazardous materials incident, and such expense shall be a charge against that person. Such charge shall constitute a debt of such person and is collectible by the public agency incurring such expense in the same manner as in the case of an obligation under a contract, expressed or implied.

Chapter 15.22 GREEN BUILDING STANDARDS CODE

Sections:

15.22.010 Adoption of Green Building Standards Code.

Except as hereinafter provided, Title 31, Green Building Standards Code, of the Los Angeles County Code, as amended and in effect on January 1, 2023, adopting the California Green Building Standards Code, 2022 Edition (Part 11 of Title 24 of the California Code of Regulations), is hereby adopted and incorporated by reference, as if fully set forth below, and shall be known and may be cited as the Green Building Standards Code of the City of Rolling Hills.

In the event of any conflict between provisions of the California Green Building Standards Code, 2022 Edition, Title 31 of the Los Angeles County Code, or any amendment to the Green Building Standards Code contained in the Rolling Hills Municipal Code, the provision contained in the later listed document shall control.

A copy of Title 31 of the Los Angeles County Code and the California Green Building Standards Code, 2022 Edition, have been deposited in the office of the City Clerk of the City of Rolling Hills and shall be at all times maintained by the City Clerk for use and examination by the public.

15.22.020 Definitions.

Notwithstanding the provisions of Section 15.22.010, names or terms that are used in this code shall be construed to have the meaning ascribed to them in the Los Angeles County Green Building Standards Code or in Section 15.04.040 of Title 15 of the Rolling Hills Municipal Code, as appropriate.

15.22.030 Water budget.

Notwithstanding the provisions of Section 15.22.010, section 4.304 of the Green Building Standards Codes is amended to add section 4.304.2 to read as follows:

> 4.304.2. Water Budget. A water budget shall be developed for landscape irrigation use installed in conjunction with new construction and new or redeveloped landscaping that conforms to the local water efficient landscape ordinance in Chapter 13.18 of Title 13 of the Rolling Hills Municipal Code.

15.22.040 Low-impact development.

Notwithstanding the provisions of Section 15.22.010, section 4.106.5 of the Green Building Standards Codes is amended to read as follows:

> 4.106.5. Low-impact development. New development or additions or alteration to existing developed sites shall comply with the Storm Water Management and Pollution Control Ordinance, Chapter 8.32 of Title 8 of the Rolling Hills Municipal Code.

15.22.050 Fees.

Notwithstanding the provisions of Section 15.22.010, the fees set forth for this code shall be the same as the fees prescribed by resolution of the City Council for the Building, Electrical, Plumbing, Mechanical, Residential, and Fire Codes of Title 15 of the Rolling Hills Municipal Code.

15.22.060 Violation and penalties.

A. It is unlawful for any person to erect, construct, enlarge, alter, repair, move, improve, remove, convert, demolish, equip, use, occupy or maintain any building or structure or perform any grading in the City, or cause the same to be done, contrary to or in violation of any of the provisions of the Green Building Standards Code of the City of Rolling Hills.

B. Penalty. Any person, firm or corporation violating any of the provisions of this code shall be guilty of a misdemeanor, and each such person shall be guilty of a separate offense for each and every day or portion thereof during which any violation is committed, continued or permitted. Upon conviction, such person may be punished by a fine not to exceed one thousand dollars or by imprisonment in the County Jail for a period of not more than six months, or by both such fine and imprisonment. The provisions of this Section are in addition to and independent of any other sanctions, penalties or costs which are or may be imposed for a violation of any of the provisions of this code.

Chapter 15.24 EXISTING BUILDING CODE

Sections:

15.24.010 Adoption of Existing Building Code.

Except as herein provided, Title 33, Existing Building Code of the Los Angeles County Code, in effect on January 1, 2023, adopting the California Green Building Standards Code, 2022 Edition (Part 10 of Title 24 of the California Code of Regulations), is hereby adopted and incorporated by reference, as if fully set forth below, and shall be known as the Existing Building Code of the City of Rolling Hills.

In the event of any conflict between provisions of Title 33, Existing Building Code of the Los Angeles County Code, 2022 Edition, or any amendment to the Existing Building Code contained in the Rolling Hills Municipal Code, the provision contained in the later listed document shall control.

A copy of Title 33 of the Existing Building Code and the 2022 Edition of the California Existing Building Code have been deposited in the office of the City Clerk of the City of Rolling Hills and shall be at all times maintained by the City Clerk for use and examination by the public.

15.24.020 Definitions.

Notwithstanding the provisions of Section 15.24.010, names or terms that are used in this code shall be construed to have the meaning ascribed to them in Section 15.04.040 of Title 15 of the Rolling Hills Municipal Code.

15.24.030 Fees.

Notwithstanding the provisions of Section 15.24.010, the fees set forth for this code shall be the same as the fees prescribed for the Building Code in Section 15.04.050 of Title 15 of the Rolling Hills Municipal Code.

15.24.040 Violations and penalties.

A. It is unlawful for any person to erect, construct, enlarge, alter, repair, move, improve, remove, convert, demolish, equip, use, occupy or maintain any building or structure or perform any grading in the City of Rolling Hills, or cause the same to be done, contrary to or in violation of any of the provisions of this code.

B. Penalty. Any person, firm or corporation violating any of the provisions of this code shall be guilty of a misdemeanor, and each such person shall be guilty of a separate offense for each and every day or portion thereof during which any violation is committed, continued or permitted. Upon conviction, such person may be punished by a fine not to exceed one thousand dollars or by imprisonment in the County Jail for a period of not more than six months, or by both such fine and imprisonment. The provisions of this Section are in addition to and independent of any other sanctions, penalties or costs which are or may be imposed for a violation of any of the provisions of this code.

Chapter 15.32 UNDERGROUND UTILITY DISTRICTS

Sections:

15.32.010 Definitions.

Whenever in this chapter the words or phrases defined in this section are used, they shall have the respective meanings assigned to them in the following definitions:

A. "Commission" means the Public Utilities Commission of the State of California.

B. "Person" means and includes individuals, firms, corporations, partnerships, and their agents and employees.

C. "Poles, overhead wires and associated overhead structures" means poles, towers, supports, wires, conductors, guys, stubs, platforms, crossarms, braces, transformers, insulators, cutouts, switches, communication circuits, appliances, attachments and appurtenances located above-ground within a district and used or useful in supplying electric, communication or similar or associated service.

D. "Underground utility district" or "district" means that area in the City within which poles, overhead wires, and associated overhead structures are prohibited as such area is described in a resolution adopted pursuant to the provisions of Section 15.32.040.

E. "Utility" includes all persons or entities supplying electric, communication or similar or associated service by means of electrical materials or devices.

15.32.020 Public hearing—Authorized when—Notice.

The Council may from time to time call public hearings to ascertain whether the public necessity, health, safety or welfare requires the removal of poles, overhead wires and associated overhead structures within designated areas of the City and the underground installation of wires and facilities for supplying electric, communication or similar or associated service. The City Clerk shall notify all affected property owners as shown on the last equalized assessment roll and utilities concerned by mail of the time and place of such hearings at least ten days prior to the date thereof. Each such hearing shall be open to the public and may be continued from time to time. At each such hearing all persons interested shall be given an opportunity to be heard. The decision of the Council shall be final and conclusive.

15.32.030 Public hearing—Consultation.

Prior to holding such public hearing, the City Engineer shall consult with all affected utilities and shall prepare a report for submission at such hearing containing, among other information, the extent of such utilities' participation and estimates of the total costs to the city and affected property owners. Such report shall also contain an estimate of the time required to complete such underground installation and removal of overhead facilities.

15.32.040 Council resolution-Procedure.

If, after any such public hearing, the Council finds that the public necessity, health, safety or welfare requires such removal and such underground installation within a designated area, the Council shall, by resolution, declare such designated area an underground utility district and order such removal and underground installation. Such resolution shall include a description of the area comprising such district and shall fix the time within which such removal and underground installation shall be accomplished and within which affected property owners must be ready to receive underground services. A reasonable time shall be allowed for such removal and underground installation, having due regard for the availability of labor, materials and equipment necessary for such removal and for the installation of such underground facilities as may be occasioned thereby.

15.32.050 Maintaining overhead structures prohibited when.

Whenever the Council creates an underground utility district and orders the removal of poles, overhead wires and associated overhead structures therein as provided in Section 15.32.040, it is unlawful for any person or utility to erect, construct, place, keep, maintain, continue, employ or operate poles, overhead wires and associated overhead structures in the district after the date when said overhead facilities are required to be removed by such resolution, except as said overhead facilities may be required to furnish service to an owner or occupant of property prior to the performance by such owner or occupant to continue to receive utility service as provided in Section 15.32.100, and for

such reasonable time required to remove said facilities after said work has been performed, and except as otherwise provided in this chapter.

15.32.060 Emergency overhead structures.

Notwithstanding the provisions of this chapter, overhead facilities may be installed and maintained for a period not to exceed ten days without authority of the City Manager in order to provide emergency service. The City Manager may grant special permission on such terms as the City Manager may deem appropriate, in cases of unusual circumstances, without discrimination as to any person or utility, to erect, construct, install, maintain, use or operate poles, overhead wires and associated overhead structures.

15.32.070 Council resolution—Exceptions authorized.

In any resolution adopted pursuant to Section 15.32.040, the City may authorize any or all of the following exceptions:

A. Any municipal facilities or equipment installed under the supervision and to the satisfaction of the City Engineer;

B. Poles or electroliers used exclusively for street lighting;

C. Overhead wires (exclusive of supporting structures) crossing any portion of a district within which overhead wires have been prohibited, or connecting to buildings on the perimeter of a district, which such wires originate in an area from which poles, overhead wires and associated overhead structures are not prohibited;

D. Poles, overhead wires and associated overhead structures used for the transmission of electric energy at nominal voltages in excess of 34,500 volts;

E. Overhead wires attached to the exterior surface of a building by means of a bracket or other fixture and extending from one location of the building to another location on the same building or to an adjacent building without crossing any public street;

F. Antennae, associated equipment and supporting structures used by a utility for furnishing communication services;

G. Equipment appurtenant to underground facilities, such as surface-mounted transformers, pedestal-mounted terminal boxes and meter cabinets, and concealed ducts.

H. Temporary poles, overhead wires and associated overhead structures used or to be used in conjunction with construction projects.

15.32.080 Notice to property owners and utility companies.

A. Within ten days after the effective date of a resolution adopted pursuant to Section 15.32.040, the City Clerk shall notify all affected utilities and all persons owning real property within the district created by said resolution of the adoption thereof. The City Clerk shall further notify such affected property owners of the necessity that if they or any person occupying such property desire to continue to receive electric, communication, or similar or associated service, they or such occupant shall provide all necessary facility changes on their premises so as to receive such service from the lines of the supplying utility or utilities at a new location.

B. Notification by the City Clerk shall be made by mailing a copy of the resolution adopted pursuant to Section 15.32.040, together with a copy of this chapter, to affected property owners as such are shown on the last equalized assessment roll and to the affected utilities.

15.32.090 Responsibility of utility companies.

If underground construction is necessary to provide utility service within a district created by any resolution adopted pursuant to Section 15.32.040, the supplying utility shall furnish that portion of the conduits, conductors and associated equipment required to be furnished by it under its applicable rules, regulations and tariffs on file with the Commission.

15.32.100 Responsibility of property owners—Notice.

Every person owning, operating, leasing, occupying or renting a building or structure within a District shall construct and provide that portion of the service connection on his property between the facilities referred to in Section 15.32.090 and the termination facility on or within said building or structure being served. If the above is not accomplished by any person within the time provided for in the resolution enacted pursuant to Section 15.32.040, the City Engineer shall give, notice in writing to the person in possession of such premises, and a notice in writing to the owner thereof as shown on the last equalized assessment roll, to provide the required underground facilities within ten days after receipt of such notice.

15.32.110 Notice—Service.

The notice to provide the required underground facilities may be given either by personal service or by mail. In case of service by mail on either of such persons, the notice must be deposited in the United States mail in a sealed envelope with postage prepaid, addressed to the person in possession of such premises at such premises, and the notice must be addressed to the owner thereof as such owner's name appears, and must be addressed to such owner's last known address as the same appears on the last equalized assessment roll, and when no address appears, to General Delivery, City of

Rolling Hills, California. If notice is given by mail, such notice shall be deemed to have been received by the person to whom it has been sent within forty-eight hours after the mailing thereof. If notice is given by mail to either the owner or occupant of such premises, the City Engineer shall, within forty-eight hours after the mailing thereof, cause a copy thereof, printed on a card not less than eight inches by ten inches in size to be posted in a conspicuous place on said premises.

15.32.120 Notice—Form.

The notice given by the City Engineer to provide the required underground facilities shall particularly specify what work is required to be done, and shall state that if said work is not completed within thirty days after receipt of such notice, the City Engineer will provide such required underground facilities, in which case the cost and expense thereof will be assessed against the property benefited and become a lien upon such property.

15.32.130 Work by City Engineer—Assessment of costs.

If upon the expiration of the thirty-day period the required underground facilities have not been provided, the City Engineer shall forthwith proceed to do the work; provided, however, if such premises are unoccupied and no electric or communications services are being furnished thereto, the City Engineer may authorize the disconnection and removal of any and all overhead service wires and associated facilities supplying utility service to said property. Upon completion of the work by the City Engineer, he shall file a written report with the City Council setting forth the fact that the required underground facilities have been provided and the cost thereof, together with a legal description of the property against which such cost is to be assessed. The Council shall thereupon fix a time and place for hearing protests against the assessment of the cost of such work upon such premises, which said time shall not be less than ten days thereafter.

15.32.140 Assessment—Hearing—Notice.

The City Engineer shall forthwith, upon the time for hearing such protests having been fixed, give a notice in writing to the person in possession of such premises, and a notice in writing thereof to the owner thereof, in the manner provided in this chapter for the giving of the notice to provide the required underground facilities, of the time and place that the Council will pass upon such report and will hear protests against such assessment. Such notice shall also set forth the amount of the proposed assessment.

15.32.150 Assessment—Hearing—Decision.

Upon the date and hour set for the hearing of protests, the Council shall hear and consider the report and all protests if there be any, and then proceed to affirm, modify or reject the assessment.

15.32.160 Assessment—Lien.

If any assessment is not paid within the five days after its confirmation by the Council, the amount of the assessment shall become a lien upon the property against which the assessment is made by the City Engineer, and the City Engineer is directed to turn over to the Assessor and Tax Collector a notice of lien of each of said properties on which the assessment has not been paid, and the Assessor and Tax Collector shall add the amount of said assessment to the next regular bill for taxes levied against the premises upon which said assessment was not paid. Said assessment shall be due and payable, and if not paid when due and payable, shall bear interest at the rate of six percent per annum.

15.32.170 Responsibility of City.

The City shall remove at its own expense all City-owned equipment from all poles required to be removed under this chapter in ample time to enable the owner or user of such poles to remove the same within the time specified in the resolution enacted pursuant to Section 15.32.040.

15.32.180 Extension of time.

In the event that any act required by this chapter or by a resolution adopted pursuant to Section 15.32.040 cannot be performed within the time provided on account of shortage of materials, war, restraint by public authorities, strikes, labor disturbances, civil disobedience, or any other circumstances beyond the control of the contractor, then the time within which such act will be accomplished shall be extended for a period equivalent to the time of such limitation.

15.32.190 Violation—Penalty.

It is unlawful for any person to violate any provision or to fail to comply with any requirement of this chapter. Any person violating any provision of this chapter or failing to comply with any of its requirements shall be deemed guilty of a misdemeanor and upon conviction thereof shall be punishable by a fine or not more than one thousand dollars or by imprisonment in County Jail for a period not exceeding six months, or by both such fine and imprisonment. Each such person shall be guilty of a separate offense for each and every day during any portion of which any violation of any provision of this chapter is committed, continued or permitted by such person and shall be punishable accordingly.

Chapter 15.36 HOURS OF CONSTRUCTION

Sections:

15.36.010 Work of improvement defined.

For the purpose of this chapter, "work of improvement" includes but is not restricted to the construction, alteration, addition, or the repair, in whole or in part, of any building, structure, bridge, ditch, pipeline, tunnel, fence, or road; the cutting or removal of weeds, trees and grass; the seeding, sodding or planting of any lot or tract of land for landscaping purposes; the filling, levelling, grading of any lot or tract of land; or the crushing of rock or the hauling of any material to be used or removed in connection with any of the foregoing; the demolition of buildings; or the removal of buildings.

15.36.020 Hours restricted.

There shall be no work of improvement or the operation of mechanical equipment used in connection with work of improvement within the territorial limits of the City except on Monday through Saturday of each week, commencing at the hour of seven a.m. and ending at the hour of six p.m. on each day.

15.36.030 Exceptions.

The provisions of this chapter shall not apply to residents of the City who are the record owners of land in the City or who are the lessees of the record owners of land in the City.

Chapter 15.40 GEOLOGICAL INVESTIGATIONS AND REPORTS REQUIRED

Sections:

15.40.010 Requirements.

The requirements provided for in this chapter are in addition to any and all other requirements relating to expansive soils and geological inspections and reports required by the building code of the City or any other ordinance of the City.

15.40.020 Authority—Procedure.

A. No building (as defined in the Los Angeles County Building Laws) for which a building or grading permit is required by the building code of the City, shall be issued by the City Engineer if he, and/or the City Council, is of the opinion that a potentially serious geological condition may exist on the land on which the proposed building is to be constructed, or the proposed grading is to be performed, until a geological report prepared by a geologist registered by the State is delivered

to the City Engineer by the applicant for the building or grading permit. The report shall include, among other things, test borings or excavations.

B. If said geological report, in the opinion of the City Engineer, indicates a potential serious geological condition, the City Engineer shall have the authority to employ an independent geologist registered by the State, to prepare and provide him with an independent geological report of the land on which the proposed building is to be constructed or the grading is proposed to be performed, and if necessary, to require additional test borings or excavations to be made by an independent testing service, the depth and accuracy of which shall be approved by said registered geologist.

C. The City Engineer shall also have authority to submit samples of any and all test borings or excavations to an independent qualified geological laboratory for analysis and report.

D. The geological report prepared by the independent registered geologist shall recommend corrective action which is designed to prevent the displacement or slippage of the land.

15.40.030 Corrective action required when.

As a condition to the issuance of a permit by the City Engineer of the City, the corrective action or procedures recommended in the geological report shall be incorporated in the proposed construction or grading for which the permit has been applied.

15.40.040 Assessment of costs.

All expenses incurred by the applicant in complying with the provisions of this chapter shall be paid for by the applicant and shall be in addition to all other charges or fees levied, assessed or charged by the City in connection with the issuance of a building or grading permit."

Section 2. All inconsistencies between the Building Code, Electrical Code, Mechanical Code, Plumbing Code, Residential Code, Green Building Code, and Existing Building Code, as adopted by this ordinance and Parts 2, 2.5, 3, 4, 5, 10, and 11 of the California Code of Regulations, are changes, modifications, amendments, additions, or deletions thereto authorized by California Health and Safety Code Sections 17958 and 17958.7.

Section 3. Justifications for Local Amendments. The City Council hereby finds that the changes and modifications to the California Building Code, Plumbing Code, Mechanical Code, Electrical Code, Residential Code, Green Building Code, and Existing Building Code enacted by this ordinance are reasonably necessary because of the City's local climate, characterized by hot, dry summers, often resulting in drought conditions, followed by strong Santa Ana winds, often resulting in hazardous fire conditions, and

heavy winter rains, often resulting in expansive soil conditions; the City's geological characteristics in that the area is characterized by geological instability; location in Southern California; and the relatively flat topography of the City.

The City Council hereby finds that the modifications to the State Building Code in Title 26 of the Los Angeles County Code are reasonably necessary because of the local climatic, geological, and topographical conditions within the City of Rolling Hills. Further, the modifications to the Building, Electrical, Mechanical, Plumbing, Green Building Standards, Residential, and Existing Building Codes in Titles 26, 27, 28, 29, 30, 31 and 33 of the Los Angeles County Code are administrative in nature and are necessary to allow the uniform application of the codes by procedures suited to the size and nature of the City's staff and administrative agencies by means suited to the City's experience with local climatic, geological, and topographical conditions and to provide sufficient staff support for the time-consuming inspections and analysis required by the City's fire and geological hazards.

Section 4. To the extent the provisions of this ordinance are substantially the same as previous provisions of the Rolling Hills Municipal Code, these sections shall be construed as continuations of those provisions and not as new enactments.

Section 5. Severability. If any section, subsection, subdivision, paragraph, sentence, clause, or phrase of this ordinance or any part hereof is for any reason held to be invalid by a court of competent jurisdiction, such invalidity shall not affect the validity of the remaining portions of this ordinance or any part thereof. The City Council of the City of Rolling Hills hereby declares that it would have passed each section, subsection, subdivision, paragraph, sentence, clause, or phrase hereof, irrespective of the fact that any one or more sections, subsections, subdivisions, paragraphs, sentences, clauses, or phrases be declared invalid.

Section 6. California Environmental Quality Act. The City Council finds that this ordinance is not a project within the meaning of Section 15378 of the California Environmental Quality Act (“CEQA”) Guidelines because it has no potential for resulting in physical change to the environment. Most of the terms of the building standards adopted herein are dictated by the California Buildings Standards Code and county amendments to the state standards only make those modifications necessary for local regional conditions which are at least as protective of the environment as the state codes. City-specific amendments are limited to creating administrative processes for local enforcement of the state building standards. Alternatively, even if the ordinance is a project within the meaning of CEQA, its adoption is exempt from CEQA under the general rule that CEQA only applies to projects that may cause significant adverse effects on the environment. CEQA Guideline section 15061(b)(3). As this ordinance is largely administrative in nature, there is no possibility that the City’s action would adversely affect the environment in any manner that could be significant.

Section 7. Effective Date. This Ordinance shall take effect 30 days after its passage and adoption pursuant to California Government Code section 36937 and shall apply to all projects submitted to the City for plan check and/or permit application on or after that date.

PASSED, APPROVED, AND ADOPTED this 9th day of January, 2023.

_____
MAYOR

ATTEST

_____
City Clerk

City of Rolling Hills INCORPORATED JANUARY 24, 1957

Agenda Item No.: 7.J
Mtg. Date: 01/09/2023

TO: **HONORABLE MAYOR AND MEMBERS OF THE CITY COUNCIL**

FROM: **VANESSA HEVENER, SENIOR MANAGEMENT ANALYST**

THRU: **ELAINE JENG P.E., CITY MANAGER**

SUBJECT: **ADOPT RESOLUTION NO. 1321 OF THE CITY COUNCIL OF THE CITY OF ROLLING HILLS AUTHORIZING SUBMITTAL OF APPLICATIONS FOR THE CALIFORNIA DEPARTMENT OF RESOURCES RECYCLING A N D RECOVERY (CALRECYCLE) PAYMENT PROGRAMS AND RELATED AUTHORIZATIONS**

DATE: **January 09, 2023**

BACKGROUND:
On January 24, 2022 the City Council approved Resolution No. 1286 which was intended to be a multi-year resolution to allow the City to apply for a variety of grants and programs administered by the Department of Resources Recycling and Recovery (CalRecycle) including the annual Beverage Container Recycling City/County Payment Program.

On December 5, 2022, Staff submitted the application for the annual Beverage Container Recycling City/County Payment Program. Shortly thereafter, Staff was notified that Resolution No. 1286 did not include a 'valid until rescinded' clause which if that clause was not included, the resolution would be only valid for one year from the date of adoption. In order to approve the City's application, CalRecycle requires an adoption of a new Resolution before the grant deadline of January 17, 2023.

The City of Rolling Hills is eligible for a $5,000 grant award upon completion of the funding application. The Beverage Container Recycling City/County Payment Program has an Expenditure Period of two years after awarding with term date of March 1, 2025. The Program has a variety of eligible activities and options to allow jurisdictions to utilize the funds most appropriately.

DISCUSSION:
Resolution No. 1321 includes language that will allow the City to apply for CalRecycle grants for multiple years.

FISCAL IMPACT:
The grant has no fiscal impact to the General Fund.

RECOMMENDATION:
Approve as presented.

ATTACHMENTS:
ResolutionNo1321_CalRecycleGrant.pdf

RESOLUTION NO. 1321

A RESOLUTION OF THE CITY COUNCIL OF THE CITY OF ROLLING HILLS AUTHORIZING SUBMITTAL OF APPLICATIONS FOR THE CALIFORNIA DEPARTMENT OF RESOURCES RECYCLING AND RECOVERY (CALRECYCLE) PAYMENT PROGRAMS AND RELATED AUTHORIZATIONS

THE CITY COUNCIL OF THE CITY OF ROLLING HILLS, CALIFORNIA DOES HEREBY RESOLVE, DECLARE, DETERMINE, AND ORDER AS FOLLOWS:

Section 1. Recitals.

A. Public Resources Code Sections 48000 *et seq.,* 14581, and 42023.1(g) authorize the Department of Resources Recycling and Recovery ("CalRecycle") to administer various payment programs to make payments to qualifying jurisdictions; and

B. In furtherance of this authority, CalRecycle is required to establish procedures governing the administration of the payment programs; and

C. CalRecycle's procedures for administering payment programs require, among other things, an applicant's governing body to declare by resolution certain authorizations related to the administration of the payment program; and

D. The City Council of the City of Rolling Hills ("City") desires to authorize the City Manager or her designee to submit applications to CalRecycle for any payment program for which it is eligible and execute all documents necessary to implement and secure payments thereunder.

Section 2. The City of Rolling Hills is authorized to submit applications to CalRecycle for payment programs for which it is eligible.

Section 3. The City Manager or her designee is authorized to execute in the name of the City of Rolling Hills all documents necessary to implement and secure payments under the payment programs for which it is eligible.

Section 4. This Resolution shall take effect immediately upon its adoption by the City Council and is in effect until rescinded by the City Council. The City Clerk shall certify to the passage and adoption of this Resolution and enter it into the book of original resolutions.

PASSED, APPROVED, AND ADOPTED this 9th day of January 2023.

_____
PAT WILSON
MAYOR

ATTEST:

_____
CHRISTIAN HORVATH
CITY CLERK

STATE OF CALIFORNIA)
COUNTY OF LOS ANGELES) §§
CITY OF ROLLING HILLS)

The foregoing Resolution No. 1321 entitled:

A RESOLUTION OF THE CITY COUNCIL OF THE CITY OF ROLLING HILLS AUTHORIZING SUBMITTAL OF APPLICATIONS FOR THE CALIFORNIA DEPARTMENT OF RESOURCES RECYCLING AND RECOVERY (CALRECYCLE) PAYMENT PROGRAMS AND RELATED AUTHORIZATIONS

was approved and adopted at a regular meeting of the City Council on the 9th day of January 2023, by the following roll call vote:

AYES:

NOES:

ABSENT:

ABSTAIN:

_____
CHRISTIAN HORVATH
CITY CLERK

Agenda Item No.: 11.A
Mtg. Date: 01/09/2023

TO: **HONORABLE MAYOR AND MEMBERS OF THE CITY COUNCIL**

FROM: **ELAINE JENG, CITY MANAGER**

THRU: **ELAINE JENG P.E., CITY MANAGER**

SUBJECT: **APPROVE PLANS AND SPECIFICATIONS AND AUTHORIZE SOLICITATION FOR CONSTRUCTION BIDS FOR THE CITY HALL HEATING, VENTILATION AND AIR CONDITIONING (HVAC) PROJECT AND FINDING THE SAME EXEMPT FROM THE CALIFORNIA ENVIRONMENTAL QUALITY ACT.**

DATE: **January 09, 2023**

BACKGROUND:
Since late July 2022, City Hall operated without proper ventilation. At the October 10, 2022 City Council meeting, S&K Consulting Services was hired to assess the condition of the City Hall Heating, Ventilation and Air Conditioning (HVAC) system and provide an engineering design for a functioning system.

DISCUSSION:
In late November 2022, S&K Consulting Services completed the engineering design and submitted plans for permitting with the Los Angeles County Building and Safety. Per the current Los Angeles County Building Code, S&K Consulting was able to determine that the scope of work is an HVAC replacement/repair project.

S&K Consulting Services reported that the existing equipment includes a pair of furnaces that are twinned (interlocked to supply the same duct) with two cooling coils connected to a single commercial outdoor package unit. The size of the furnaces are no longer manufactured and twinning is no longer common practice with ultra-low nox systems. Most of the ductwork has been damaged beyond repair and sections are in shambles above the ceiling.

City Hall is split into two zones in this context. Zone 1 is comprised of the individual offices, and the lobby. Zone 2 is comprised of the Council Chambers. The new design will addressing existing imbalance of airflow and improve temperature control by splitting Zone 1 into two zones where the lobby, reception area and hallway will be on a separate thermostat.

S&K Consulting Services also specified new HVAC equipment with higher efficiencies and the lowest emissions. Several pieces of equipment will need to be placed outside of City Hall, at

the existing recycling center.

Alan Palermo Consulting, the City's Project Manager coordinated information exchange between S&K Consulting Services, and the City Hall ADA Improvement Project design team to ensure that the HVAC project makes provisions for the future condition to be improved by the ADA project.

Plans were submitted to Los Angeles County in November 2022 and approved in December. The plans have been revised to (Revision No. 1) to include information/address existing hazardous materials. S&K consulting is confirming if this plan revision requires Los Angeles County plan review. The plans and specifications attached include Revision No. 1.

The engineer's estimate to the HVAC project is $250,185.

If the City Council authorizes staff to solicit construction bids, staff anticipates the bid opening in mid February 2022 and construction to commence in mid March 2022. Depending on the lead time for the equipment, construction duration can vary between two to five months.

ENVIRONMENTAL REVIEW

The solicitation for bids does not constitute a Project as defined under the California Environmental Quality Act (“CEQA”).
Further, the solicitation for bids for HVAC at City Hall is exempt from CEQA pursuant to section 15301 of the CEQA Guidelines (Existing facilities) in that it will replace already existing equipment at City Hall with upgraded and more energy efficient versions.

FISCAL IMPACT:
The failure of the City Hall HVAC system was unanticipated; the project was not budgeted in the Fiscal Year 2022-2023 adopted budget. If the City Council approves the project to move forward, the General Fund Reserves would be need to fund the project, in the amount of $250,185. This amount could change depending on construction bids received.

RECOMMENDATION:
Approve as presented.

ATTACHMENTS:
CL_AGN_230109_CC_HVAC_UpgradeCostEstimate.pdf
CL_AGN_230109_CC_HVAC_RepairSpecs.pdf
CL_AGN_230109_CC_HVAC_RepairDrawings.pdf

S&K CONSULTING SERVICES

COST ESTIMATE SUMMARY

Rolling Hills City Hall HVAC Repair Project

Status of Design: Final

DATE PREPARED	12/22/2022
PROJECT NO.	0092226
CLIENT	City of Rolling Hills
ESTIMATED BY	Samuel Simon

ITEM DESCRIPTION		ENGINEERING ESTIMATE	
		%	TOTAL
SUMMARY			
DIVISION 01	GENERAL CONDITIONS		11,168.75
DIVISION 02	EXISTING CONDITIONS		19,500.00
DIVISION 03	CONCRETE		10,500.00
DIVISION 23	HEATING, VENTILATING, AND AIR CONDITIONING		121,560.67
DIVISION 26	ELECTRICAL		16,800.00
SUBTOTAL			179,529.42
OVERHEAD AND PROFIT		8.0%	14,363.00
SUBTOTAL			193,892.42
CONTINGENCY		10.0%	19,390.00
SUBTOTAL			213,282.00
BONDS AND INSURANCE		2.0%	4,266.00
SUBTOTAL			217,548.00
1 YEAR ESCALATION		15.0%	32,633.00
SUBTOTAL			250,181.00
TOTAL			250,181.00

S&K CONSULTING SERVICES

COST ESTIMATE

Rolling Hills City Hall HVAC Repair Project

Status of Design: Final

DATE PREPARED	12/22/2022
PROJECT NO.	0092226
CLIENT	City of Rolling Hills
ESTIMATED BY	Samuel Simon

ITEM DESCRIPTION		QUANTITY		MATERIAL COST		LABOR COST		ENGINEERING ESTIMATE	
		NUMBER	UNIT	UNIT COST	TOTAL	UNIT COST	TOTAL	UNIT COST	TOTAL
01	GENERAL CONDITIONS								11,168.75
	Mobilization	1.00	LS					3,200.00	3,200.00
	Superintendent	1.50	MO					2,012.50	3,018.75
	Temporary Barriers and Fences	1.00	LS					1,250.00	1,250.00
	Scissor Lift Rental	1.00	MO					1,000.00	1,000.00
	General Conditions Allowances	1.00	LS					2,700.00	2,700.00
02	EXISTING CONDITIONS								19,500.00
	General Demolition	1.00	LS					12,500.00	12,500.00
	Abatement	1.00	LS					7,000.00	7,000.00
03	CONCRETE								10,500.00
	Concrete Equipment Pads	3.00	EA					3,500.00	10,500.00
23	HEATING, VENTILATING, AND AIR CONDITIONING								121,560.67
	High Efficiency, Ultra-Low Nox, Furnace Units	3.00	EA	7,929.00	23,787.00	640.00	1,920.00	8,569.00	25,707.00
	High Efficiency Air Conditioner	3.00	EA	4,446.00	13,338.00	640.00	1,920.00	5,086.00	15,258.00
	Refrigerant Cooling Coils	3.00	EA	1,719.00	5,157.00	640.00	1,920.00	2,359.00	7,077.00
	High Performance Economizer	3.00	EA	2,904.00	8,712.00	640.00	1,920.00	3,544.00	10,632.00
	Refrigerant Piping	3.00	EA	1,100.00	3,300.00	1,600.00	4,800.00	2,700.00	8,100.00
	Natural Gas Piping	3.00	EA	750.00	2,250.00	640.00	1,920.00	1,390.00	4,170.00
	Controls	3.00	LS					7,500.00	22,500.00
	Duct, Insulation, Hanging, and Bracing	1.00	LS					16,200.00	16,200.00
	Registers & Dampers	10.00	EA	375.00	3,750.00	106.67	1,066.67	481.67	4,816.67
	Testing, Adjusting, & Balancing	1.00	LS					4,300.00	4,300.00

S&K CONSULTING SERVICES

COST ESTIMATE

Rolling Hills City Hall HVAC Repair Project

Status of Design: Final

DATE PREPARED	12/22/2022
PROJECT NO.	0092226
CLIENT	City of Rolling Hills
ESTIMATED BY	Samuel Simon

ITEM DESCRIPTION		QUANTITY		MATERIAL COST		LABOR COST		ENGINEERING ESTIMATE	
		NUMBER	UNIT	UNIT COST	TOTAL	UNIT COST	TOTAL	UNIT COST	TOTAL
	Air Duct Cleaning	1.00	LS					2,800.00	2,800.00
26	ELECTRICAL								16,800.00
	Electrical Power for HVAC	3.00	LS					5,600.00	16,800.00
100									

December 28, 2022

S&K No. 092226

SPECIFICATIONS

ROLLING HILLS CITY HALL HVAC REPAIR

ROLLING HILLS, CA

Prepared for:

City of Rolling Hills

No. 2 Portuguese Bend Rd
Rolling Hills, CA 90274
t. (310) 377-1521
f. (310) 377-7288

Prepared by:

S&K CONSULTING SERVICES

385 Van Ness Ave, Ste 270
Torrance, CA 90501
t. (310) 494-6910
e. info@skcsi.com

THIS PAGE IS INTENTIONALLY LEFT BLANK

TABLE OF CONTENTS

DIVISION 00 - PROCUREMENT AND CONTRACTING REQUIREMENTS

(NOTE: TO BE FURNISHED BY OWNER)

000105	Certifications Page
003126	Existing Hazardous Material Information

DIVISION 01 - GENERAL REQUIREMENTS

(NOTE: SOME SECTIONS TO BE FURNISHED BY OWNER)

012500	Substitution Procedures
013300	Submittal Procedures
013516	Alteration Project Procedures
014000	Quality Requirements
017300	Execution
017419	Construction Waste Management and Disposal
017700	Closeout Procedures
017823	Operation and Maintenance Data
017839	Project Record Documents
017900	Demonstration and Training

DIVISION 02 - EXISTING CONDITIONS

024119	Selective Demolition

DIVISION 03 - CONCRETE

033000	Cast-In-Place Concrete

DIVISION 23 - HEATING, VENTILATING, AND AIR CONDITIONING (HVAC)

230130.52	Existing HVAC Air Distribution System Cleaning
230529	Hangers and Supports for HVAC Piping and Equipment
230548	Vibration and Seismic Controls for HVAC
230553	Identification for HVAC Piping and Equipment
230593	Testing, Adjusting, and Balancing for HVAC
230713	Duct Insulation
230719	HVAC Piping Insulation
230923.27	Temperature Instruments
231123	Facility Natural-Gas Piping
232300	Refrigerant Piping
233113	Metal Ducts

233300 Air Duct Accessories
233713.23 Registers and Grilles
235416.13 Gas-Fired Furnaces
236313 Air-Cooled Refrigerant Condensers
238216.13 Refrigerant Air Coils

DIVISION 26 - ELECTRICAL

260519 Low-Voltage Electrical Power Conductors and Cables
260523 Control-Voltage Electrical Power Cables
260529 Hangers and Supports for Electrical Systems
260533 Raceways and Boxes for Electrical Systems
260553 Identification for Electrical Systems
262816 Enclosed Switches and Circuit Breakers

END OF TABLE OF CONTENTS

DOCUMENT 000105 - CERTIFICATIONS PAGE

PROJECT TITLE:	Rolling Hills City Hall HVAC Repair
CLIENT AGENCY:	City of Rolling Hills
LOCATION:	2 Portuguese Bend Rd Rolling Hills, CA 90274
PROJECT NUMBER:	S&K #092226
OWNER:	City of Rolling Hills
OWNER'S REPRESENTATIVE:	Elaine Jeng City of Rolling Hills 2 Portuguese Bend Rd, Rolling Hills, CA 90274 Telephone Number: (310) 377-1521
CONSULTANT:	S&K Consulting Services

		
Samuel Simon, PE MECHANICAL & PLUMBING	Sevag Avanessian, PE ELECTRICAL ENGINEER	

THIS PAGE IS INTENTIONALLY LEFT BLANK

DOCUMENT 003126 - EXISTING HAZARDOUS MATERIAL INFORMATION

1.1 EXISTING HAZARDOUS MATERIAL INFORMATION

A. This Document with its referenced attachments is part of the Procurement and Contracting Requirements for Project. They provide Owner's information for Bidders' convenience and are intended to supplement rather than serve in lieu of Bidders' own investigations. They are made available for Bidders' convenience and information, but are not a warranty of existing conditions. This Document and its attachments are not part of the Contract Documents.

B. An existing asbestos report for Project, prepared by Ellis Environmental Management, Inc, dated November 10, 2022, is available for viewing as appended to this Document.

C. An existing lead report for Project, prepared by Ellis Environmental Management, Inc, dated November 10, 2022, is available for viewing as appended to this Document.

END OF DOCUMENT 003126

Hazardous Materials Assessment

- o **Asbestos**
- o **Lead**

Rolling Hills City Hall

2 Portuguese Bend Road
Rolling Hills, CA 90274

Sampling Date: October 28, 2022

Prepared for:
Elaine Jeng, City Manager
Rolling Hills
2 Portuguese Bench Road
Rolling Hills, CA 90274

Prepared by:
Ellis Environmental Management, Inc.
430 Silver Spur Road, Suite 201
Rancho Palos Verdes, CA 90275
310 544 1837 / www.ellisenvironmental.com

Report Date: November 10, 2022
Ellis Project No: 22-452

Terms of Use

This investigation and subsequent report have been performed and prepared for the exclusive of:

The City of Rolling Hills

by Ellis Environmental Management, Inc. Ellis will distribute any information regarding this assessment and report only upon the request of the client. This report is based upon data and information obtained during the site visits performed by Ellis personnel for the property identified herein and is based solely upon the condition of the property on the date of such inspection, supplemented by information and data obtained by Ellis and described herein. Information presented is based on professional interpretation of data available as of the date of the report. Physical materials testing (radon) was not performed as part of this investigation. In evaluating the property, Ellis has relied in good faith upon representations and information furnished by individuals and agencies noted in the report with respect to operations and existing property conditions, and the historic uses of the property to the extent that they have not been contradicted by data obtained from other sources. Use of this report indicates acceptance and agreement that Ellis will incur no responsibility or liability for any loss, injury, claim or damage arising directly or indirectly from any use or reliance on this report, regardless of whether claimed loss, injury, claim or damage was caused by the deficiency, misstatements, omissions, misinterpretations, or fraudulent acts of persons interviewed. Ellis has performed this work, made findings, and proposed recommendations described in this report in accordance with generally accepted environmental science practices in effect at the time the work was performed and within the time frames requested by client. Additional information received following issuance of the report may alter initial findings and recommendations. This warranty stands in lieu of all other warranties, expressed or implied. While this report can be used as a guide, it must be understood that it is neither a rejection nor an endorsement of the property, or of the means or methods used in the treatment, storage or disposal of potentially hazardous materials. Changing circumstances in the environment and in the use of the property can alter the conclusions and information contained in the report.

Table of Contents

Introduction
Site Description
Background
Applicable Regulations – Asbestos
Applicable Regulations – Lead
Methodology
Inaccessible Areas
Results
Summary and Recommendations
Statement of Independence
Signatory

Table 1 – Asbestos Summary
Table 2 – Lead Summary

Appendix A Photographs
Appendix B Material and Sample Locations
Appendix C Laboratory Results
Appendix D Ellis / Lab Certifications
Appendix E Regulatory Summaries
CDPH Form 8552

430 Silver Spur Road, Suite 201
Rancho Palos Verdes, CA 90275
Tel: (310) 544 1837
Fax: (310) 544 2167

Project No. 22-452
November 10, 2022

Elaine Jeng, City Manager
Rolling Hills
2 Portuguese Bend Road
Rolling Hills, CA 90274

Subject: BULK SAMPLING FOR ASBESTOS AND LEAD
ROLLING HILLS CITY HALL – 2 PORTUGUESE BEND RD,
ROLLING HILS, CA 90274

INTRODUCTION

On October 28, 2022, Ellis performed the following services at the subject site:

- an inspection for possible asbestos- and lead-containing building materials

To the best of our knowledge, this survey and report have been prepared to include the following asbestos- and lead-specific components:

a. survey sampling protocol to include collection, sampling and analysis methods
b. initial characterization of asbestos waste stream(s)
c. certification of the inspector as a CSST
d. certification of the inspector as a CDPH lead sampling technician
e. certification of the report preparer as a CAC
f. certification of the report preparer as a CDPH lead inspector/assessor
g. state laboratory certification

SITE DESCRIPTION

At the time of sampling, the subject site was an occupied office / city hall facility, construction date currently unknown. The structure's framing and exterior walls are comprised of a combination of wood and stucco. The interior walls and ceilings of the structure are comprised of plaster, stucco, and wallboard. The roofing system is comprised of an asphalt style roofing paper with overlayed concrete shingles and surface mastics and sealants covering any roofing field penetrations or flashings.

BACKGROUND – ASBESTOS AND LEAD

Asbestos-containing materials and lead-based paints have been widely used in the construction of public and commercial buildings since the 1930's. Insulation and fireproofing in more than 750,000 buildings in this country contain some quantity of asbestos. Lead paint was widely applied up until circa 1978, when concentrations of lead in paint began to be reduced.

In their normal state, most types of asbestos-containing building materials are unlikely to release airborne fibers. When broken up or disturbed improperly, however, asbestos fibers may become airborne. "Friable" materials – that is, materials that can be crushed using normal hand pressure – are more likely to release airborne fibers when disturbed improperly. Inhalation exposure to high levels of asbestos over long periods and/or ingestion of lead-based paint are associated with an increased incidence of cancer, respiratory, liver and other diseases.

Asbestos is primarily an inhalation hazard. Lead-based paint, when damaged (peeling or flaking), is primarily an ingestion hazard. Any activity that could disturb asbestos materials or lead-based paint should be undertaken with care and in accordance with applicable law.

APPLICABLE REGULATIONS – ASBESTOS

Current state and federal regulations pertaining to asbestos are summarized below. The summary is not all-inclusive and does not address specific removal or disposal requirements for individual materials.

NESHAPS

The National Emission Standard for Hazardous Air Pollutants (NESHAP), regulation 40 CFR Part 61, states that no visible emissions are allowed during building demolition or renovation activities which involve regulated asbestos-containing materials (RACMs). All buildings, regardless of construction date, must be surveyed for ACMs prior to demolition or renovation. The US EPA and/or the local air quality management district which implements US EPA actions must be notified prior to any building demolition, even if no ACMs are present. An ACM is defined as any material with an asbestos content of greater than one percent and which (a) is friable, or (b) Category I non-friable ACM that has or will become friable, or (c) Category II friable ACM that may become or will become crumbled, pulverized, or reduced to powder by the forces expected to act on the material in the course of demolition or renovation.

According to NESHAP, ACM is material containing more than one percent asbestos as determined using the methods specified in Appendix A, Subpart E, 40 CFR Part 763, Section 1, PLM. The NESHAP classifies ACM as friable or non-friable. Friable ACM is ACM that contains more than one percent asbestos and when dry, can be crumbled, pulverized, or reduced to powder by hand pressure.

Non-friable ACM also contains more than one percent asbestos and is further classified as either Category I ACM or Category II ACM. The materials are distinguished by their potential to release fibers when damaged. Category I ACMs are much more likely to release fibers when damaged.

In accordance with the US EPA's NESHAP regulation, facilities planned for renovation or demolition must be surveyed for the total amount of asbestos materials, which must be categorized

as friable, Category 1 non-friable, and Category 2 non-friable ACMs.

Southern California Air Quality Management District (SCAQMD)

The SCAQMD is a government agency that regulates sources of air pollution within the area of the Los Angeles and surrounding counties. The District's regulating and enforcement authority comes from federal law. In response to the NESHAP requirements, the SCAQMD implemented Rule 1403 to specify work practice requirements to limit asbestos emissions from building demolition and renovation activities, including the removal and associated disturbance of asbestos-containing materials (ACM). The requirements for demolition and renovation activities include asbestos surveying, notification, ACM removal procedures and time schedules, ACM handling and clean-up procedures, and storage, disposal, and landfilling requirements for asbestos-containing waste materials (ACWM). All operators are required to maintain records, including waste shipment records, and are required to use appropriate warning labels, signs, and markings.

AHERA

The Asbestos Hazard Emergency Response Act (AHERA) requires performance of asbestos surveys and the development of Asbestos Management Plans for all of the nation's primary and secondary schools. The general procedures mandated under AHERA are considered the industry standard and are applied to all surveys performed.

Cal-OSHA

Per Cal-OSHA standards, 1926.1101, Asbestos-Containing Construction Materials (ACCMs) are defined as any material with an asbestos content greater than one-tenth of one percent (>0.1%). Cal-OSHA sets forth work requirements for disturbance of ACCMs including removal operations for all types of ACCMs. The requirements have been classified as Class I, Class II, Class III, or Class IV Asbestos related work. The classes are distinguished by their potential to release fibers. Cal-OSHA prescribes specific engineering controls and work practices for each Class of Asbestos related Work.

1. Class I – This Class refers to removal of ACMs identified as Thermal System Insulation (TSI) or surfacing (sprayed-on or troweled-on) materials. These materials are generally considered friable.
2. Class II – This Class refers to removal of ACMs identified that are not TSI or surfacing materials. These materials are generally considered non-friable.
3. Class III – This Class refers to repair and maintenance operations of all identified ACMs.
4. Class IV – This Class refers to incidental contact with identified ACMs such as custodial staff.

California Health and Safety Code

The California Health and Safety Code 25915 (former Connelly Bill) requires all building owners in the State of California to provide written notification to employees, tenants, and contractors of the presence and location of ACCMs within their buildings. Some exclusion to the notification rule for restricted access areas is allowed. All documentation related to asbestos surveys (and air monitoring) must be made available to employees, tenants, or contractors for review. ACCMs are defined as any materials with an asbestos content greater than one-tenth of one percent (>0.1%). The California Health and Safety Code also require that a seller with any knowledge of ACMs on a property disclose such information or knowledge to other parties involved in a real estate transaction.

Building Demolition / Renovation

In accordance with the US EPA's NESHAPs regulation and the SCAQMD, all structures planned for renovation or demolition must be surveyed for ACMs prior to the planned renovation or demolition. Subsequent removal of identified ACMs is also required. Removal involves, to the greatest extent practical, the complete removal, disposal, and replacement, if necessary, of the ACMs. Removal usually also requires encapsulation of the remaining structure to lock down residual fibers which may exist. Removal of ACMs is required prior to renovation and/or demolition activities. The US EPA and SCAQMD require removal of all RACMs prior to demolition or renovation. RACMs include friable and non-friable (Category I and II) which have or will become friable by demolition or renovation activities.

APPLICABLE REGULATIONS – LEAD

California Title 8. Industrial Relations, Division 1, Department of Industrial Relations, Chapter 4, Division of Industrial Safety, Subchapter 4, Construction Safety Orders, Article 4, Dusts, Fumes, Mists, Vapors, and Gases, §1532.1, Lead.

This section applies to all construction work where an employee may be occupationally exposed to lead. All construction work excluded from coverage in the general industry standard for lead by section 5198(a)(2) is covered by this standard. Construction work is defined as work for construction, alteration and/or repair, including painting and decorating. It includes but is not limited to the following [applicable portions in bold text]:

(1) Demolition or salvage of structures where lead or materials containing lead are present;
(2) Removal or encapsulation of materials containing lead;
(3) New construction, alteration, repair, or renovation of structures, substrates, or portions thereof, that contain lead, or materials containing lead;
(4) Installation of products containing lead;
(5) Lead contamination/emergency cleanup;
(6) Transportation, disposal, storage, or containment of lead or materials containing lead on the site or location at which construction activities are performed, and
(7) Maintenance operations associated with the construction activities described in this subsection.

California Health & Safety Code 17961 et al.

Deems a building to be in violation of state law if it contains lead hazards and requires local enforcement agencies to enforce provisions related to lead hazards. Makes it a crime for a person to engage in specified acts related to lead hazard evaluation, abatement, and lead-related construction courses unless certified or accredited by the Department. Permits local enforcement agencies to order the abatement of lead hazards or issue a cease and desist order in response to lead hazards.

California Labor Code 6716 to 6717 Lead-Related Activities in Construction Work

Provides for the establishment of standards that protect the health and safety of employees who engage in lead-related construction work, including construction, demolition, renovation and repair.

California Code of Regulations, Title 17, Section 35001

Includes requirements for lead hazard evaluation and abatement activities, accreditation of training providers, and certification of individuals engaged in lead-based paint activities.

METHODOLOGY

Bulk Sampling of Suspect Asbestos-Containing Materials

A sampling plan was first prepared, listing each material to be sampled, sample location, and material condition. Accessible building materials were visually inspected using the methods presented in the Federal Asbestos Hazard Emergency Response Act (AHERA) regulations (40 CFR, Part 763) as a guideline. AHERA was originally only applicable to schools, however state and federal Occupational Safety and Health Administration (OSHA) and Asbestos School Hazard Abatement and Reauthorization Act (ASHARA) have adopted the AHERA sampling methodology for all buildings subject to demolition or renovation.

Bulk samples of all suspect ACM homogeneous materials were collected. A homogeneous material is defined as a surfacing material, thermal system insulation, or miscellaneous material that is uniform in color, texture and age of construction. Examples of homogeneous materials include:

- Pipe-insulation produced by the same manufacturer and installed during the same time period;
- Resilient flooring of identical color and pattern;
- Troweled on surfacing materials located in contiguous areas.

The structure was visually inspected for the presence of suspect materials. As materials were identified, bulk samples were obtained with the aid of a coring device or other hand tool and placed into individual sampling bags. Each sample was given a discrete identification number and recorded on field notes as well as chain-of-custody forms. Bulk samples were transported to and analyzed at an AIHA accredited laboratory. Analysis method used: 40 CFR Part 763, Subpart F, Appendix A. (AHERA Final Rule). Results expressed in percent of measured area.

Cal-OSHA defines asbestos containing construction materials (ACCM) as those materials having asbestos content of greater than one tenth of one percent (>0.1%). When None Detected (ND) appears in this report, it should be interpreted as meaning no asbestos was observed in the sampled material above the reliable limit of detection for the PLM method employed.

Note: under EPA assessment criteria, if a single sample of a homogeneous material tests positive for asbestos, all similar materials within that area are considered to be asbestos containing.

Bulk Sampling of Suspect Lead-containing Materials

Paint chip and/or other suspected lead containing materials were collected using a hand scraper, small chisel or other tool. Each sample was placed into an individual plastic sample container with a unique identification number. Paint samples were hand delivered to an AIHA accredited laboratory for initial analysis using EPA Method 3050B/6010B, and by EPA Method Total Threshold Limit Concentration (TTLC). (When "<" appears in the lead analysis report, it should be interpreted as meaning below the analytical detection limit.) All samples were collected by Shawn Sokolsky, an EPA-accredited building inspector and lead inspectors/risk assessor employed by Ellis.

INACCESSIBLE AREAS

Not all walls, ceilings or floors were demolished to gain complete visual access. The roof of the structure was not sampled as part of this survey. There is a chance that additional suspect materials (pipe insulation in walls and above sub-ceilings, asbestos-cement vent pipes, underground drains,

primer on steel structural members, etc.) may be exposed during demolition activities.

Initiate demolition carefully. Any materials exposed but not identified in existing reports should be sampled and analyzed prior to disturbance.

RESULTS

See Tables 1-2. Also refer to the attached laboratory results, summarized below.

Asbestos

Asbestos was detected in the following sampled material:

1. exterior stucco – (<0.1% chrysotile, good condition / "non-friable" – appx. 500 ft^2 in qty.*)
2. acoustic ceiling (soft) – (6-7% chrysotile, good condition / "friable" – appx. 2,000 ft^2 in qty.*)
3. ceiling plaster – (2% chrysotile, good condition / "non-friable" – appx. 2,000 ft^2 in qty.*)
4. wall plaster – (<0.1% chrysotile, good condition / "non-friable" – appx. 2,000 ft^2 in qty.*)
5. resilient sheet flooring / linoleum (upper) and associated mastic – (5-8% chrysotile, good condition / "friable" – appx. 300 ft^2 in qty.*)
6. resilient sheet flooring / linoleum (bottom) and associated mastic – (20% chrysotile, good condition / "friable" – appx. 100 ft^2 in qty.*)
7. 9" x 9" vinyl floor tile . associated mastic – (6-8% chrysotile, good condition / "non-friable" – appx. 150 ft^2 in qty.*)
8. window putty – (2% chrysotile, good condition / "non-friable" – appx. 10 ft^2 in qty.*)

** Not for bidding purposes. Conditions noted are representative of observations on the date of sampling (only). Field verify all listed quantities and conditions.*

A licensed abatement contractor is required for the disturbance or removal of the asbestos-containing materials with greater than 0.1% asbestos content noted above. Reference Table 1 for a complete list of asbestos-related samples.

The removal of any material containing asbestos in an amount greater than one percent (Asbestos-Containing Material or ACM) is regulated under EPA-SCAQMD Rule 1403, 29 CFR 1926.1101 (federal OSHA) and other state and local guidelines. Removal of any material containing asbestos in an amount greater than 0.1 percent is also regulated, under Cal-OSHA Title 8 Section 1529. Asbestos-containing waste material (ACWM) generated during the removal of friable and non-friable ACM must be disposed of as hazardous asbestos waste and non-hazardous asbestos waste, respectively. For asbestos-containing materials with asbestos concentrations of less than 1% but greater than 0.1%, so called Asbestos-Containing Construction Materials or ACCM, waste generated during abatement activities may be disposed of as standard construction waste but must still be *removed* by a DOSH registered abatement contractor. For asbestos-containing materials with asbestos concentrations less than 0.1%, removal or disturbance by a DOSH registered abatement contractor is not required; however, certain work practices outlined in Cal/OSHA Title 8 § 1529 may still apply. Prior to renovation or demolition, retain a licensed abatement contractor to remove

asbestos materials identified.

Lead-Containing Materials – Paint

The following sampled paints are "lead-based" (>0.06 % lead by wt.):

1. white front door paint – (0.074% lead by wt.)
2. white wall trim paint – (0.33% lead by wt.)
3. eggshell wall paint – (0.099% lead by wt.)
4. grey storage wall paint – (0.18% lead by wt.)

A licensed abatement contractor is required for the removal of disturbance of the lead-based paint listed above. Drum and profile all uniquely generated waste stream prior to transportation or disposal.

The following sampled paints are "lead-containing" (<0.06 % lead by wt.):

1. white exterior paint – (0.013% lead by wt.)

Avoid torching, welding, or mechanical abrading on lead-containing paints without prior exposure monitoring as is stipulated in Cal/OSHA Title 8 § 1532.1. No other special, lead-related precautions required. Reference the attached lead "Trigger Tasks" document for additional information on "lead-based" (>.06%) and "lead-containing" (<.06%) paints and work practices.

Lead-Containing Materials – Ceramic Tile

The following sampled ceramic tile is "lead-containing" (>50 mg/Kg):

1. ceramic restroom wall tile – (76 mg/Kg)

A licensed abatement contractor is required for the removal of disturbance of the lead-based paint listed above. Drum and profile all uniquely generated waste stream prior to transportation or disposal. Reference Table 2 for a complete list of lead-related samples.

SUMMARY AND RECOMMENDATIONS

Asbestos

Retain a licensed abatement contractor for the removal or disturbance of the asbestos-containing materials noted to be present in this report.

Subsurface materials, such as asbestos-cement (AC, or "Transite") ***may*** **also be present**. A review of existing utility plans may reveal their presence, location and quantity. AC pipe, when exposed during grading activities, must be removed under an SCAQMD-approved work plan ("Procedure 5").

Lead

Retain a licensed abatement contractor for the removal or disturbance of the lead-based paints and lead-containing ceramic tile noted to be present in this report. Lead-based paint may be exposed on structural steel beams beneath fire proofing, and in other similar locations. If exposed but not identified in existing reports, any such materials should be sampled prior to disturbance.

Health and Safety Plan (HaSP)

A health and safety plan, or HaSP, is a plan for a workplace that is designed in accordance with the legislative requirements covering the roles and responsibilities of the staff, an emergency action plan etc. A health and safety plan is designed to serve and protect the individuals affected by the organization in all matters of health, wellbeing and safety.

The HaSP should be provided by the general or abatement contractor. A "site specific" health and safety plan mainly describes what kind of hazards are involved in the project, how they can be overcome and what sort of equipment will be used to overcome the problem. Health and safety plans will differ from job to job, but the underlying theme of every plan is that it should not only take care of the health and safety of the employees, but also ensure safety for visitors of the premises and the passersby[1].

STATEMENT OF INDEPENDENCE

Ellis is a privately held company and is not affiliated with any financial institution or other corporate entity. Ellis is retained as an independent contractor to provide objective, impartial investigation or analytical services regarding environmentally regulated hazardous or toxic materials. This report is not an endorsement or rejection of any specific methods used in handling or transport of potentially hazardous chemicals. Nor is intended as a complete hazardous materials survey of the entire building or facility. Ellis provides independent testing for asbestos, lead, indoor air contaminants and other potentially hazardous materials. The company and its employees are certified and licensed to practice in the State of California. Retained laboratories are accredited by the EPA, AREAL, NIOSH, AIHA, and CARB.

SIGNATORY

Respectfully,
ELLIS ENVIRONMENTAL MANAGEMENT, INC.

Prepared by:



Ryan C. Davidson
Senior Project Manager
CAC #15-5395
CDPH #0368

proj # 22-452

Distribution: Elaine Jeng

1 SOURCE: www.safeopedia.com

REF.	MATERIAL	MATERIAL LOCATION	FRIABLE	DAMAGE	% ASB	QTY*	UNIT
	IDENTIFIED ASBESTOS MATERIALS						
A1, A2, A3	exterior stucco	see Figures 1-2	no	no	<0.1%	500	ft²
A4, A5, A6	acoustic ceiling (soft)	see Figures 1-2	yes	no	6-7%	2,000	ft²
A7, A8, A9	ceiling plaster	see Figures 1-2	no	no	2%	2,000	ft²
A13, A14, A15	wall plaster	see Figures 1-2	no	no	<0.1%	2,000	ft²
A22, A23, A24	resilient sheet flooring / linoleum (upper) and associated mastic	see Figures 1-2	yes	no	5-8%	300	ft²
A25, A26, A27	resilient sheet flooring / linoleum (bottom) and associated mastic	see Figures 1-2	yes	no	20%	100	ft²
A28, A29, A30	9" x 9" vinyl floor tile / associated mastic	see Figures 1-2	no	no	6-8%	150	ft²
A31, A32, A33	window putty	see Figures 1-2	no	no	2%	10	ft²
	**Not for bidding purposes. Field verify all quantities and conditions.*						
	NON-ASBESTOS MATERIALS						
A16, A17, A18	white cove base / associated mastic	see Figures 1-2	-	-	none detected	-	-
A16, A17, A18	green cove base / associated mastic	see Figures 1-2	-	-	none detected	-	-
A34, A35, A36	red cove base / associated mastic	see Figures 1-2	-	-	none detected	-	-
A37, A38, A39	carpet glue	see Figures 1-2	-	-	none detected	-	-
A40, A41, A42	acoustic ceiling (hard)	see Figures 1-2	-	-	none detected	-	-
	Not a complete survey; only client-specified materials were sampled.						

Ellis

Table 1
Asbestos Results Summary
Rolling Hills City Hall

SHEET 1 OF 1
Proj. # 22-452
Sample Date: 10/28/22

REF.	MATERIAL	LEAD RESULTS (% by wt.)	LEAD-BASED? (>0.06% by wt.)	LEAD-CONTAINING? (>0.01 to <0.06% by wt.)
L1	white front door paint	0.074%	**YES**	-
L2	white wall trim paint	0.33%	**YES**	-
L5	eggshell wall paint	0.099%	**YES**	-
L6	grey storage wall paint	0.18%	**YES**	-
L8	white exterior paint	0.013%	no	**YES**
L4	white concrete floor paint	<0.0080%	no	no
L7	white gutter paint	<0.0080%	no	no
REF.	MATERIAL	LEAD RESULTS (mg/Kg)	LEAD-CONTAINING (>50 mg/Kg)	NON LEAD-CONTAINING? (<50 mg/Kg)
L3	ceramic restroom wall tile	76 mg/Kg	**YES**	-
	Not a complete survey; only client-specified materials and locations were sampled. See report text.			

APPENDIX A

PHOTOGRAPHS



(above) Asbestos-containing acoustic ceiling and ceiling plaster.



(above) Asbestos-containing 9” floor tile/mastic.



(above) Asbestos-containing linoleum (multi-layered).



(above) Asbestos-containing window putty.



(above) Trace – asbestos containing wall plaster.



(above) Trace-asbestos containing exterior stucco overhang.



(above) Lead-based white front door paint and lead-containing exterior white paint.



(above) Lead-based interior white trim paint.



(above) Lead-based gray storage room wall paint.


(above) Lead-based eggshell wall paint.



(above) Lead-containing restroom ceramic wall tile.

APPENDIX B

MATERIAL AND SAMPLE LOCATIONS

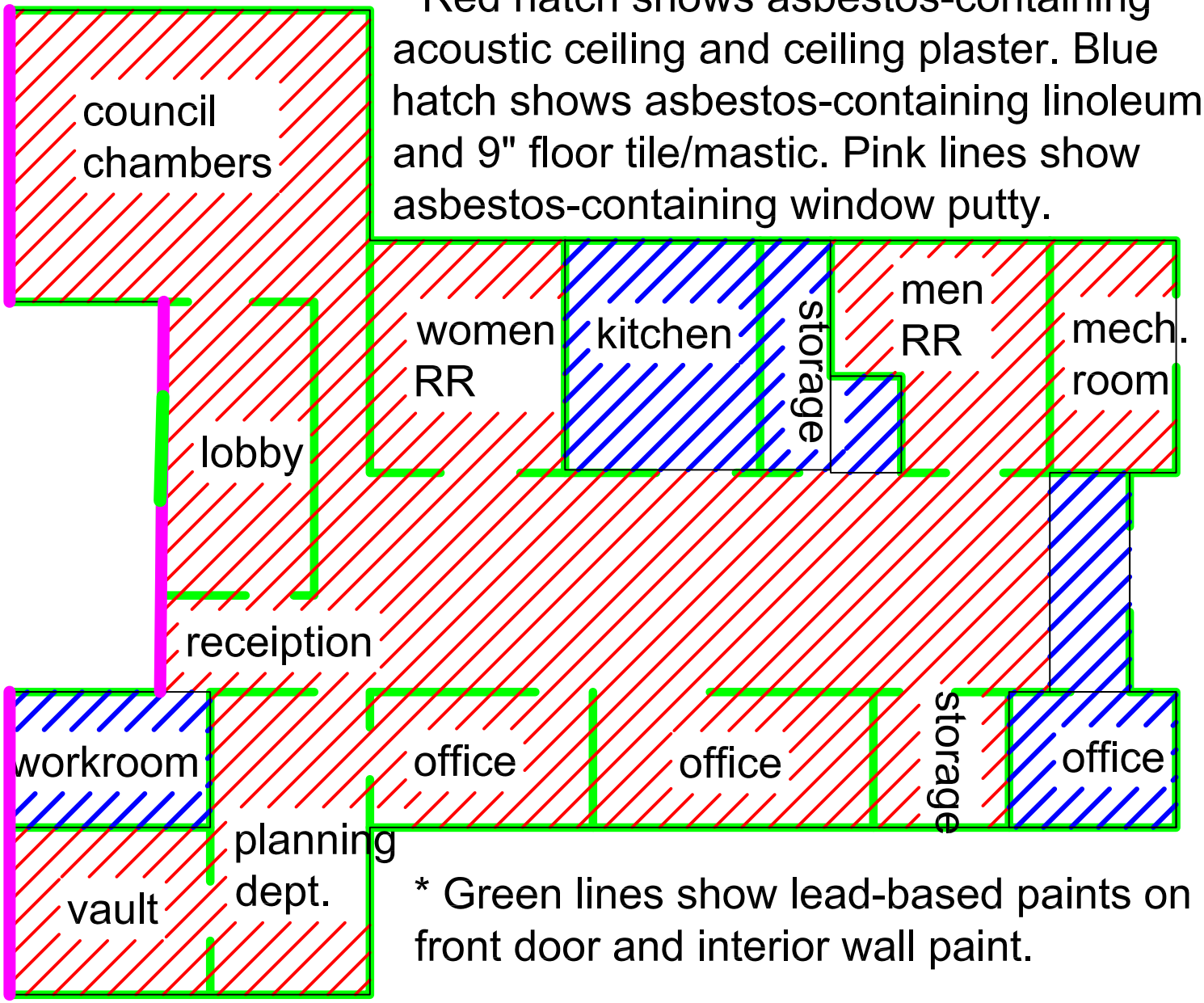

* Red hatch shows asbestos-containing acoustic ceiling and ceiling plaster. Blue hatch shows asbestos-containing linoleum and 9" floor tile/mastic. Pink lines show asbestos-containing window putty.

* Green lines show lead-based paints on front door and interior wall paint.

Figure 1: Material Locations
Rolling Hills City Hall
2 Portuguese Bend Rd.
Rolling Hills, CA 90274

Firm Name and Address

Ellis Environmental Mgmt, Inc.
430 Silver Spur Rd., Suite 201
Rancho Palos Verdes, CA 90275

Client Name and Address

City of Rolling Hills
2 Portuguese Rd.
Rolling Hills, CA 90274

Project #	Sheet
22-452	1 of 1
Date 11/08/2022	

Ellis

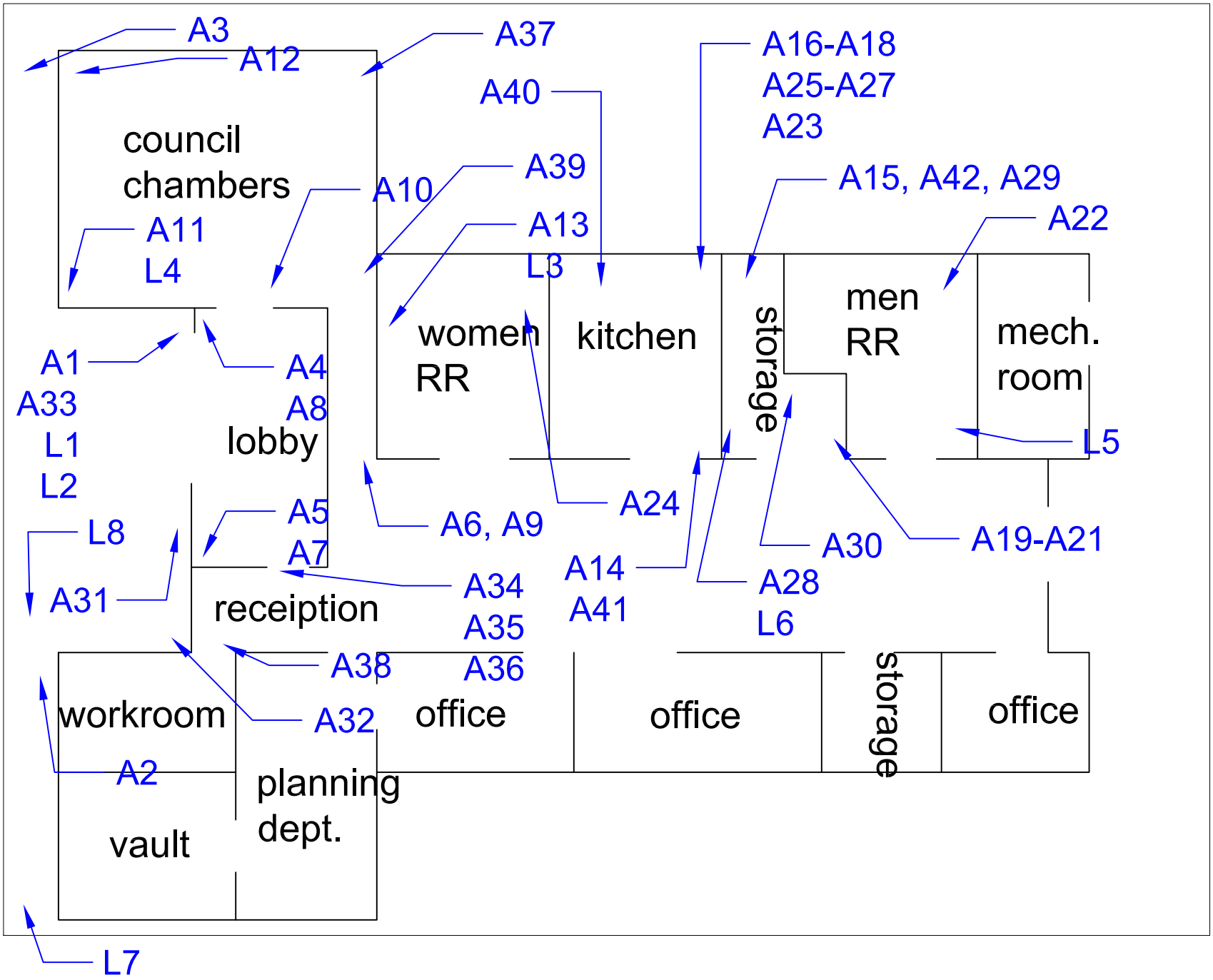

Figure 2: Sample Locations
Rolling Hills City Hall
2 Portuguese Bend Rd.
Rolling Hills, CA 90274

Firm Name and Address

Ellis Environmental Mgmt, Inc.
430 Silver Spur Rd., Suite 201
Rancho Palos Verdes, CA 90275

Client Name and Address

City of Rolling Hills
2 Portuguese Rd.
Rolling Hills, CA 90274

Project #	Sheet
22-452	1 of 1
Date 11/08/2022	

Ellis

APPENDIX C

LABORATORY RESULTS

LA Testing

520 Mission Street South Pasadena, CA 91030
Tel/Fax: (323) 254-9960 / (323) 254-9982
http://www.LATesting.com / pasadenalab@latesting.com

LA Testing Order:	322221852
Customer ID:	32EEMI45
Customer PO:	
Project ID:	

Attention:	Duane Behrens	**Phone:**	(310) 686-7470
	Ellis Environmental Management, Inc.	**Fax:**	
	430 Silver Spur Road	**Received Date:**	10/28/2022 1:10 PM
	Suite 201	**Analysis Date:**	11/02/2022 - 11/03/2022
	Rancho Palos Verdes, CA 90275	**Collected Date:**	10/28/2022
Project:	22-452/ 2 Portuguese Bend Rd. Rolling Hills CA, 90274		

Test Report: Asbestos Analysis of Bulk Materials via EPA 600/R-93/116 Method using Polarized Light Microscopy

			Non-Asbestos		Asbestos
Sample	**Description**	**Appearance**	**% Fibrous**	**% Non-Fibrous**	**% Type**
A1 *322221852-0001*	Ext. stucco	Gray/White Non-Fibrous Homogeneous		100% Non-fibrous (Other)	<1% Chrysotile
A2 *322221852-0002*	Ext. stucco	Gray/White Non-Fibrous Homogeneous		100% Non-fibrous (Other)	<1% Chrysotile
A3-Finish Coat *322221852-0003*	Ext. stucco	White Non-Fibrous Homogeneous		100% Non-fibrous (Other)	<1% Chrysotile
A3-Base Coat *322221852-0003A*	Ext. stucco	Gray Non-Fibrous Homogeneous		100% Non-fibrous (Other)	None Detected
A4 *322221852-0004*	Acoustic ceiling (soft)	Gray/White/Gold Non-Fibrous Homogeneous		10% Mica 83% Non-fibrous (Other)	7% Chrysotile
A5 *322221852-0005*	Acoustic ceiling (soft)	Tan/White/Gold Non-Fibrous Homogeneous		10% Mica 83% Non-fibrous (Other)	7% Chrysotile
A6 *322221852-0006*	Acoustic ceiling (soft)	Gray/White/Gold Non-Fibrous Homogeneous		5% Mica 89% Non-fibrous (Other)	6% Chrysotile
A7 *322221852-0007*	Ceiling plaster	White/Beige Non-Fibrous Homogeneous		98% Non-fibrous (Other)	2% Chrysotile
A8 *322221852-0008*	Ceiling plaster	White/Beige Non-Fibrous Homogeneous		98% Non-fibrous (Other)	2% Chrysotile
A9 *322221852-0009*	Ceiling plaster	White/Beige Non-Fibrous Homogeneous		98% Non-fibrous (Other)	2% Chrysotile
A10-Wallboard *322221852-0010*	Ceiling wb/jc	Brown/White Fibrous Heterogeneous	20% Cellulose	80% Non-fibrous (Other)	None Detected
A10-Joint Compound *322221852-0010A*	Ceiling wb/jc	White Non-Fibrous Homogeneous		100% Non-fibrous (Other)	None Detected
A11-Wallboard *322221852-0011*	Ceiling wb/jc	Brown/White Fibrous Heterogeneous	20% Cellulose	80% Non-fibrous (Other)	None Detected
A11-Joint Compound *322221852-0011A*	Ceiling wb/jc	White Non-Fibrous Homogeneous		100% Non-fibrous (Other)	None Detected
A12-Wallboard *322221852-0012*	Ceiling wb/jc	Brown/White Fibrous Heterogeneous	20% Cellulose	80% Non-fibrous (Other)	None Detected
A12-Joint Compound *322221852-0012A*	Ceiling wb/jc	White Non-Fibrous Homogeneous		100% Non-fibrous (Other)	None Detected

Initial report from: 11/03/2022 11:05:25

LA Testing
520 Mission Street South Pasadena, CA 91030
Tel/Fax: (323) 254-9960 / (323) 254-9982
http://www.LATesting.com / pasadenalab@latesting.com

LA Testing Order: 322221852
Customer ID: 32EEMI45
Customer PO:
Project ID:

Test Report: Asbestos Analysis of Bulk Materials via EPA 600/R-93/116 Method using Polarized Light Microscopy

			Non-Asbestos		Asbestos
Sample	**Description**	**Appearance**	**% Fibrous**	**% Non-Fibrous**	**% Type**
A13 *322221852-0013*	Wall plaster	Gray/White Non-Fibrous Homogeneous		100% Non-fibrous (Other)	<1% Chrysotile
A14 *322221852-0014*	Wall plaster	Gray/White Non-Fibrous Homogeneous		100% Non-fibrous (Other)	<1% Chrysotile
A15 *322221852-0015*	Wall plaster	Gray/White Non-Fibrous Homogeneous		100% Non-fibrous (Other)	<1% Chrysotile
A16-Cove Base *322221852-0016*	White cb/mastic	Beige Non-Fibrous Homogeneous		100% Non-fibrous (Other)	None Detected
A16-Mastic *322221852-0016A*	White cb/mastic	Beige Non-Fibrous Homogeneous		100% Non-fibrous (Other)	None Detected
A16-Joint Compound *322221852-0016B*	White cb/mastic	White Non-Fibrous Homogeneous		100% Non-fibrous (Other)	None Detected
A17-Cove Base *322221852-0017*	White cb/mastic	White Non-Fibrous Homogeneous		100% Non-fibrous (Other)	None Detected
A17-Mastic *322221852-0017A*	White cb/mastic	Beige Non-Fibrous Homogeneous		100% Non-fibrous (Other)	None Detected
A17-Joint Compound *322221852-0017B*	White cb/mastic	White Non-Fibrous Homogeneous		100% Non-fibrous (Other)	None Detected
A18-Cove Base *322221852-0018*	White cb/mastic	White Non-Fibrous Homogeneous		100% Non-fibrous (Other)	None Detected
A18-Mastic *322221852-0018A*	White cb/mastic	Beige Non-Fibrous Homogeneous		100% Non-fibrous (Other)	None Detected
A18-Joint Compound *322221852-0018B*	White cb/mastic	White Non-Fibrous Homogeneous		100% Non-fibrous (Other)	None Detected
A19-Cove Base *322221852-0019*	Green cb/mastic	Gray Non-Fibrous Homogeneous		100% Non-fibrous (Other)	None Detected
A19-Mastic *322221852-0019A*	Green cb/mastic	Brown Non-Fibrous Homogeneous		100% Non-fibrous (Other)	None Detected
A19-Joint Compound *322221852-0019B*	Green cb/mastic	White Non-Fibrous Homogeneous		100% Non-fibrous (Other)	None Detected
A20-Cove Base *322221852-0020*	Green cb/mastic	Gray Non-Fibrous Homogeneous		100% Non-fibrous (Other)	None Detected
A20-Mastic *322221852-0020A*	Green cb/mastic	Beige Non-Fibrous Homogeneous		100% Non-fibrous (Other)	None Detected
A20-Joint Compound *322221852-0020B*	Green cb/mastic	White Non-Fibrous Homogeneous		100% Non-fibrous (Other)	None Detected
A21-Cove Base *322221852-0021*	Green cb/mastic	Gray Non-Fibrous Homogeneous		100% Non-fibrous (Other)	None Detected

Initial report from: 11/03/2022 11:05:25

LA Testing
520 Mission Street South Pasadena, CA 91030
Tel/Fax: (323) 254-9960 / (323) 254-9982
http://www.LATesting.com / pasadenalab@latesting.com

LA Testing Order: 322221852
Customer ID: 32EEMI45
Customer PO:
Project ID:

Test Report: Asbestos Analysis of Bulk Materials via EPA 600/R-93/116 Method using Polarized Light Microscopy

			Non-Asbestos		Asbestos
Sample	**Description**	**Appearance**	**% Fibrous**	**% Non-Fibrous**	**% Type**
A21-Mastic *322221852-0021A*	Green cb/mastic	Brown Non-Fibrous Homogeneous		100% Non-fibrous (Other)	None Detected
A22-Caulking Like *322221852-0022*	Linoleum	White Non-Fibrous Homogeneous		100% Non-fibrous (Other)	None Detected
A22-Linoleum *322221852-0022A*	Linoleum	White/Pink/Beige Fibrous Heterogeneous	20% Cellulose 3% Glass	77% Non-fibrous (Other)	None Detected
A22-Mastic 1 *322221852-0022B*	Linoleum	Beige Non-Fibrous Homogeneous		100% Non-fibrous (Other)	None Detected
A22-Mastic 2 *322221852-0022C*	Linoleum	Black Non-Fibrous Homogeneous		95% Non-fibrous (Other)	5% Chrysotile
A23-Caulking Like *322221852-0023*	Linoleum	White Non-Fibrous Homogeneous		100% Non-fibrous (Other)	None Detected
A23-Linoleum *322221852-0023A*	Linoleum	White/Pink/Beige Fibrous Heterogeneous	20% Cellulose 2% Glass	78% Non-fibrous (Other)	None Detected
A23-Mastic 1 *322221852-0023B*	Linoleum	Beige Non-Fibrous Homogeneous		100% Non-fibrous (Other)	None Detected
A23-Mastic 2 *322221852-0023C*	Linoleum	Black Non-Fibrous Homogeneous		92% Non-fibrous (Other)	8% Chrysotile
A24-Caulking Like *322221852-0024*	Linoleum	White Non-Fibrous Homogeneous		100% Non-fibrous (Other)	None Detected
A24-Linoleum *322221852-0024A*	Linoleum	White/Pink/Beige Fibrous Heterogeneous	20% Cellulose 2% Glass	78% Non-fibrous (Other)	None Detected
A24-Mastic 1 *322221852-0024B*	Linoleum	Beige Non-Fibrous Homogeneous		100% Non-fibrous (Other)	None Detected
A24-Mastic 2 *322221852-0024C*	Linoleum	Black Non-Fibrous Homogeneous		90% Non-fibrous (Other)	10% Chrysotile
A25-Mastic 1 *322221852-0025*	Bottom linoleum	Beige Non-Fibrous Homogeneous		100% Non-fibrous (Other)	None Detected
A25-Linoleum *322221852-0025A*	Bottom linoleum	Brown/Tan/Beige Fibrous Homogeneous		80% Non-fibrous (Other)	20% Chrysotile
A25-Mastic 2 /Mastic 3 *322221852-0025B* *Unable to separate*	Bottom linoleum	Black/Yellow Non-Fibrous Heterogeneous		100% Non-fibrous (Other)	None Detected
A26-Mastic 1 *322221852-0026*	Bottom linoleum	Beige Non-Fibrous Homogeneous		100% Non-fibrous (Other)	None Detected
A26-Linoleum *322221852-0026A*	Bottom linoleum	Brown/Tan/Beige Fibrous Heterogeneous		80% Non-fibrous (Other)	20% Chrysotile

Initial report from: 11/03/2022 11:05:25

LA Testing
520 Mission Street South Pasadena, CA 91030
Tel/Fax: (323) 254-9960 / (323) 254-9982
http://www.LATesting.com / pasadenalab@latesting.com

LA Testing Order: 322221852
Customer ID: 32EEMI45
Customer PO:
Project ID:

Test Report: Asbestos Analysis of Bulk Materials via EPA 600/R-93/116 Method using Polarized Light Microscopy

			Non-Asbestos		Asbestos
Sample	**Description**	**Appearance**	**% Fibrous**	**% Non-Fibrous**	**% Type**
A26-Mastic 2/Mastic 3 *322221852-0026B* *Unable to separate*	Bottom linoleum	Black/Yellow Non-Fibrous Heterogeneous		100% Non-fibrous (Other)	None Detected
A27-Mastic 1 *322221852-0027*	Bottom linoleum	Beige Non-Fibrous Homogeneous		100% Non-fibrous (Other)	None Detected
A27-Linoleum *322221852-0027A*	Bottom linoleum	Brown/Tan/Beige Fibrous Heterogeneous		80% Non-fibrous (Other)	20% Chrysotile
A27-Mastic 2/Mastic 3 *322221852-0027B* *Unable to separate*	Bottom linoleum	Black/Yellow Non-Fibrous Heterogeneous		100% Non-fibrous (Other)	None Detected
A28-Floor Tile *322221852-0028*	9" ft/mastic	Gray/White Non-Fibrous Homogeneous		94% Non-fibrous (Other)	6% Chrysotile
A28-Mastic *322221852-0028A*	9" ft/mastic	Black Non-Fibrous Homogeneous		92% Non-fibrous (Other)	8% Chrysotile
A29-Floor Tile *322221852-0029*	9" ft/mastic	Gray/White Non-Fibrous Homogeneous		93% Non-fibrous (Other)	7% Chrysotile
A29-Mastic *322221852-0029A*	9" ft/mastic	Black Non-Fibrous Homogeneous		92% Non-fibrous (Other)	8% Chrysotile
A30-Floor Tile *322221852-0030*	9" ft/mastic	Gray/White Non-Fibrous Homogeneous		93% Non-fibrous (Other)	7% Chrysotile
A30-Mastic *322221852-0030A*	9" ft/mastic	Black Non-Fibrous Homogeneous		90% Non-fibrous (Other)	10% Chrysotile
A31 *322221852-0031*	Window putty	Gray/Beige Non-Fibrous Homogeneous		98% Non-fibrous (Other)	2% Chrysotile
A32 *322221852-0032*	Window putty	Gray/Beige Non-Fibrous Homogeneous		98% Non-fibrous (Other)	2% Chrysotile
A33 *322221852-0033*	Window putty	Gray/Beige Non-Fibrous Homogeneous		98% Non-fibrous (Other)	2% Chrysotile
A34-Cove Base *322221852-0034*	Red cb/mastic	Brown Non-Fibrous Homogeneous		100% Non-fibrous (Other)	None Detected
A34-Mastic 1 *322221852-0034A*	Red cb/mastic	Yellow Non-Fibrous Homogeneous		100% Non-fibrous (Other)	None Detected
A34-Mastic 2 *322221852-0034B*	Red cb/mastic	Brown Non-Fibrous Homogeneous		100% Non-fibrous (Other)	None Detected
A35-Cove Base *322221852-0035*	Red cb/mastic	Brown Non-Fibrous Homogeneous		100% Non-fibrous (Other)	None Detected
A35-Mastic 1 *322221852-0035A*	Red cb/mastic	Yellow Non-Fibrous Homogeneous		100% Non-fibrous (Other)	None Detected

Initial report from: 11/03/2022 11:05:25

LA Testing
520 Mission Street South Pasadena, CA 91030
Tel/Fax: (323) 254-9960 / (323) 254-9982
http://www.LATesting.com / pasadenalab@latesting.com

LA Testing Order:	322221852
Customer ID:	32EEMI45
Customer PO:	
Project ID:	

Test Report: Asbestos Analysis of Bulk Materials via EPA 600/R-93/116 Method using Polarized Light Microscopy

			Non-Asbestos		Asbestos
Sample	**Description**	**Appearance**	**% Fibrous**	**% Non-Fibrous**	**% Type**
A35-Mastic 2 *322221852-0035B*	Red cb/mastic	Brown Non-Fibrous Homogeneous		100% Non-fibrous (Other)	None Detected
A36-Cove Base *322221852-0036*	Red cb/mastic	Brown Non-Fibrous Homogeneous		100% Non-fibrous (Other)	None Detected
A36-Mastic 1 *322221852-0036A*	Red cb/mastic	Yellow Non-Fibrous Homogeneous		100% Non-fibrous (Other)	None Detected
A36-Mastic 2 *322221852-0036B*	Red cb/mastic	Brown Non-Fibrous Homogeneous		100% Non-fibrous (Other)	None Detected
A37 *322221852-0037*	Carpet glue	Brown/Yellow Non-Fibrous Homogeneous		100% Non-fibrous (Other)	None Detected
A38 *322221852-0038*	Carpet glue	Brown/Yellow Non-Fibrous Homogeneous		100% Non-fibrous (Other)	None Detected
A39 *322221852-0039*	Carpet glue	Brown/Yellow Non-Fibrous Homogeneous		100% Non-fibrous (Other)	None Detected
A40 *322221852-0040*	Acoustic ceiling (hard)	White Non-Fibrous Homogeneous		100% Non-fibrous (Other)	None Detected
A41 *322221852-0041*	Acoustic ceiling (hard)	White Non-Fibrous Homogeneous		100% Non-fibrous (Other)	None Detected
A42 *322221852-0042*	Acoustic ceiling (hard)	White Non-Fibrous Homogeneous		100% Non-fibrous (Other)	None Detected

Analyst(s)

David Flores (54)
Tania Lopez (27)

Jerry Drapala Ph.D, Laboratory Manager
or Other Approved Signatory

LA Testing maintains liability limited to cost of analysis. Interpretation and use of test results are the responsibility of the client. This report relates only to the samples reported above, and may not be reproduced, except in full, without written approval by LA Testing. LA Testing bears no responsibility for sample collection activities or analytical method limitations. The report reflects the samples as received. Results are generated from the field sampling data (sampling volumes and areas, locations, etc.) provided by the client on the Chain of Custody. Samples are within quality control criteria and met method specifications unless otherwise noted. The above analyses were performed in general compliance with Appendix E to Subpart E of 40 CFR (previously EPA 600/M4-82-020 “Interim Method”) but augmented with procedures outlined in the 1993 (”final”) version of the method. This report must not be used by the client to claim product certification, approval, or endorsement by NVLAP, NIST or any agency of the federal government. Non-friable organically bound materials present a problem matrix and therefore LA Testing recommends gravimetric reduction prior to analysis. Unless requested by the client, building materials manufactured with multiple layers (i.e. linoleum, wallboard, etc.) are reported as a single sample. Estimation of uncertainty is available on request.

Samples analyzed by LA Testing South Pasadena, CA NVLAP Lab Code 200232-0, CA ELAP 2283

Initial report from: 11/03/2022 11:05:25

Project No.: 22-452

Client: City of Rolling Hills

Location: 2 Portuguese Bend Rd. Rolling Hills CA, 90274

Sampler: SS

Sheet 1 of 4

Ellis ENVIRONMENTAL MANAGEMENT INC.
430 Silver Spur Road, Suite 201
Rancho Palos Verdes, CA 90275
(310) 544-1837 (tel)
(310) 544-2167 (fax)

CHAIN OF CUSTODY RECORD

#322221852

Sample Number	Description	QTY Sq. Ft	Date	Time	H20	Air	Solid	Stop At First Positive Layer	Tests Required
A1	Ext. stucco	~500	10/20/22	AM			✓	✓	Asbestos - PLM
A2	↓	↓	↓	↓			↓	↓	↓
A3	↓	↓	↓	↓			↓	↓	↓
A4	Acoustic ceiling (soft)	~2,000	↓	↓			↓	↓	↓
A5	↓	↓	↓	↓			↓	↓	↓
A6	↓	↓	↓	↓			↓	↓	↓
A7	Ceiling plaster	~2,000	↓	↓			↓	↓	↓
A8	↓	↓	↓	↓			↓	↓	↓
A9	↓	↓	↓	↓			↓	↓	↓
A10	Ceiling w/Blk	~800	↓	↓			↓	↓	↓
A11	↓	↓	↓	↓			↓	↓	↓
A12	↓	↓	↓	↓			↓	↓	↓
A13	Wall plaster	~2,000	↓	↓			↓	↓	↓

Turnaround: ____ same day ____ 24 hrs. ____ 48 hrs. ____ 3 days __X__ 5 days (Standard) ____ 2 weeks

Special Instructions:

Date	Time	Relinquished By: Signature / Printed Name	Received By
10/20/22		Shawn Silalsky	Annette McKissock (WL) 10/28/22 1310

OrderID: 322221852

Project No.: 22-452

Client:

Location:

Sampler: SS

Sheet 2 of 4

Ellis ENVIRONMENTAL MANAGEMENT INC.

430 Silver Spur Road, Suite 201
Rancho Palos Verdes, CA 90275
(310) 544-1837 (tel)
(310) 544-2167 (fax)

CHAIN OF CUSTODY RECORD

#322221852

Sample Number	Description	QTY Sq. Ft	Date	Time	H20	Air	Solid	Stop At First Positive Layer	Tests Required
A14	wall plaster	~2000	10/28/22	AM			✓	✓	Asbestos-PLM
A15	↓	↓	↓	↓			↓	↓	↓
A16	white CB/mastic	~80	↓	↓			↓	↓	↓
A17	↓	↓	↓	↓			↓	↓	↓
A18	↓	↓	↓	↓			↓	↓	↓
A19	Green CB/mastic	~15	↓	↓			↓	↓	↓
A20	↓	↓	↓	↓			↓	↓	↓
A21	↓	↓	↓	↓			↓	↓	↓
A22	linoleum	~300	↓	↓			↓	↓	↓
A23	↓	↓	↓	↓			↓	↓	↓
A24	↓	↓	↓	↓			↓	↓	↓
A25	button linoleum	~100	↓	↓			↓	↓	↓
A26	↓	↓	↓	↓			↓	↓	↓

Turnaround: ____ same day ____ 24 hrs. ____ 48 hrs. ____ 3 days X 5 days (Standard) ____ 2 weeks

Special Instructions:

Date	Time	Relinquished By: Signature / Printed Name	Received By
10/28/22		Shawn Sokolsky	Annette McKissack (hl) 10/28/2022 1310

OrderID: 322221852

Project No.: 22-452

Client: _____

Location: _____

_____

Sampler: SS

Sheet 3 of 4

Ellis ENVIRONMENTAL MANAGEMENT INC.
430 Silver Spur Road, Suite 201
Rancho Palos Verdes, CA 90275
(310) 544-1837 (tel)
(310) 544-2167 (fax)

CHAIN OF CUSTODY RECORD

#322221852

Sample Number	Description	QTY Sq. Ft	Date	Time	H20	Air	Solid	Stop At First Positive Layer	Tests Required
A27	bottom linoleum	~100	10/20/22	AM			✓	✓	Asbestos - PLM
A28	9" FT/mastic	~150							
A29	↓	↓							
A30									
A31	window putty	~10							
A32									
A33	↓	↓							
A34	Red CB/mastic	~5							
A35									
A36	↓	↓							
A37	carpet glue	~2,000							
A38									
A39	↓	↓	↓	↓			↓	↓	↓

Turnaround: ____ same day ____ 24 hrs. ____ 48 hrs. ____ 3 days X 5 days (Standard) ____ 2 weeks

Special Instructions:

Date	Time	Relinquished By: Signature / Printed Name	Received By
10/20/22		Shawn Silvelsky	Annette NICKSCAOK (WE) 10/28/2022 1310

OrderID: 322221852

Project No.: ~~22-7~~ 22-4T2

Client:

Location:

Ellis ENVIRONMENTAL MANAGEMENT INC.
430 Silver Spur Road, Suite 201
Rancho Palos Verdes, CA 90275
(310) 544-1837 (tel)
(310) 544-2167 (fax)

Sampler: SS

Sheet 4 of 4

CHAIN OF CUSTODY RECORD

#322221852

Sample Number	Description	QTY Sq. Ft	Date	Time	H20	Air	Solid	Stop At First Positive Layer	Tests Required
A40	Acoustic ceiling ~~(hard)~~ (hard)	~100	10/28/22	AM			✓	✓	Asbestos - PLM
A41	↓	↓	↓	↓			↓	↓	↓
A42	↓	↓	↓	↓			↓	↓	↓
L1	white front door paint								Lead - Flame AAS
L2	white wall/trim paint								↓
L3	ceramic RR wall tile	~200							Lead - TTLC
L4	white concrete floor paint								Lead - Flame AAS
L5	Eggshell wall paint								↓
L6	Gray storage wall paint								↓
L7	white gutter paint								↓
L8	Ext. white paint		↓	↓			↓		↓

Turnaround: ____ same day ____ 24 hrs. ____ 48 hrs. ____ 3 days ✓ 5 days (Standard) ____ 2 weeks

Special Instructions:

Date	Time	Relinquished By: Signature / Printed Name	Received By
10/28/22		Shawn Sokolsky	Annette McKissack (WE) 10/28/2022 1310

OrderID: 322221852

LA Testing

520 Mission Street South Pasadena, CA 91030
Phone/Fax: (323) 254-9960 / (323) 254-9982
http://www.LATesting.com / pasadenalab@latesting.com

LA Testing Order:	322222344
Customer ID:	32EEMI45
Customer PO:	
Project ID:	

Attention:	Ellis Environmental Management, Inc. Ellis Environmental Management, Inc. 430 Silver Spur Road Suite 201 Rancho Palos Verdes, CA 90275	**Phone:** **Fax:** **Received:** **Analysis Date:** **Collected:**	(310) 544-1837 11/08/2022 1:45 PM 11/09/2022
Project:	REF PLM REPORT: 322221852 | 22-452/ 2 Portuguese Bend Rd. Rolling Hills CA, 90274		

Test Report: Asbestos Analysis of Bulk Material via EPA 600/R-93/116. Quantitation using the 1,000 Point Count Procedure

			Non-Asbestos		Asbestos
Sample	**Description**	**Appearance**	**% Fibrous**	**% Non-Fibrous**	**% Type**
A1 *322222344-0001*	Ext. Stucco	Gray/White Non-Fibrous Homogeneous		100.0% Non-fibrous (Other)	**<0.1% Chrysotile**
A2 *322222344-0002*	Ext. Stucco	Gray/White Non-Fibrous Homogeneous		100.0% Non-fibrous (Other)	**<0.1% Chrysotile**
A3-Finish Coat *322222344-0003*	Ext. Stucco	White Non-Fibrous Homogeneous		100.0% Non-fibrous (Other)	**<0.1% Chrysotile**
A13 *322222344-0004*	Wall Plaster	Gray/White Non-Fibrous Homogeneous		100.0% Non-fibrous (Other)	**<0.1% Chrysotile**
A14 *322222344-0005*	Wall Plaster	Gray/White Non-Fibrous Homogeneous		100.0% Non-fibrous (Other)	**<0.1% Chrysotile**
A15 *322222344-0006*	Wall Plaster	Gray/White Non-Fibrous Homogeneous		100.0% Non-fibrous (Other)	**<0.1% Chrysotile**

Analyst(s)

Rosa Mendoza (6)

Jerry Drapala Ph.D, Laboratory Manager
or other approved signatory

LA Testing maintains liability limited to cost of analysis. Interpretation and use of test results are the responsibility of the client. This report relates only to the samples reported above, and may not be reproduced, except in full, without written approval by LA Testing. LA Testing bears no responsibility for sample collection activities or analytical method limitations. The report reflects the samples as received. Results are generated from the field sampling data (sampling volumes and areas, locations, etc.) provided by the client on the Chain of Custody. Samples are within quality control criteria and met method specifications unless otherwise noted. The above analyses were performed in general compliance with Appendix E to Subpart E of 40 CFR (previously EPA 600/M4-82-020 “Interim Method”) but augmented with procedures outlined in the 1993 (”final”) version of the method. This report must not be used by the client to claim product certification, approval, or endorsement by NVLAP, NIST or any agency of the federal government. Non-friable organically bound materials present a problem matrix and therefore LA Testing recommends gravimetric reduction prior to analysis. Unless requested by the client, building materials manufactured with multiple layers (i.e. linoleum, wallboard, etc.) are reported as a single sample. Estimation of uncertainty is available on request.

Samples analyzed by LA Testing South Pasadena, CA NVLAP Lab Code 200232-0, CA ELAP 2283

Initial report from: 11/09/2022 08:33:01

McKissack, Annette #322222344

From: Shawn Sokolsky <shawnsokolsky@ellisenvironmental.com>
Sent: Tuesday, November 8, 2022 1:45 PM
To: Results; Flores, David; LA Testing Lab - Pasadena
Subject: Re: LA Testing report, COC for order(s) 322221852 (322221852 - 22-452/ 2 Portuguese Bend Rd. Rolling Hills CA, 90274)

[EXTERNAL E-MAIL]
Please further analyze samples A1-A3 ext. stucco and A13-A15 wall plaster by 1,000-point count - 24-hr TAT, Thank You.

Shawn Sokolsky
Industrial Hygienist * shawnsokolsky@ellisenvironmental.com
ELLIS ENVIRONMENTAL MANAGEMENT INC
430 Silver Spur Road, Suite 201, Rancho Palos Verdes, CA 90275
Office: 310 544 1837 cell: 310 686 9575 www.ellisenvironmental.com

---

From: LA Testing (South Pasadena) <pasadenalab@latesting.com>
Sent: Thursday, November 3, 2022 11:08 AM
To: Results <results@ellisenvironmental.com>
Subject: LA Testing report, COC for order(s) 322221852 (322221852 - 22-452/ 2 Portuguese Bend Rd. Rolling Hills CA, 90274)

Report, COC for order(s):
322221852 - 22-452/ 2 Portuguese Bend Rd. Rolling Hills CA, 90274

David Flores
Microscopist
LA Testing 520 Mission Street South Pasadena, CA 91030
Phone: 323-254-9960 Toll Free: 800-303-0047

Conduct Field Surveys From Your Smart Device Today! Download EMSL's APP: iTunes App Store - Apple or Google Play
Resources: LABConnectTM | Order Products | Free Webinars | Additional Resources | EMSL.tv

Connect With Us:
"This email may contain privileged and confidential information and is solely for the use of the sender's intended recipient(s). **If you are not the intended recipient of this communication, you are hereby notified that any unauthorized review, use, dissemination, distribution, downloading, or copying of this communication is strictly prohibited.** If you received this email in error, please notify the sender by reply email and delete all copies and attachments. Thank you."

#322222344

LA Testing
520 Mission Street South Pasadena, CA 91030
Tel/Fax: (323) 254-9960 / (323) 254-9982
http://www.LATesting.com / pasadenalab@latesting.com

LA Testing Order: 322221852
Customer ID: 32EEMI45
Customer PO:
Project ID:

Attention: Duane Behrens
Ellis Environmental Management, Inc.
430 Silver Spur Road
Suite 201
Rancho Palos Verdes, CA 90275
Project: 22-452/ 2 Portuguese Bend Rd. Rolling Hills CA, 90274

Phone: (310) 686-7470
Fax:
Received Date: 10/28/2022 1:10 PM
Analysis Date: 11/02/2022 - 11/03/2022
Collected Date: 10/28/2022

Test Report: Asbestos Analysis of Bulk Materials via EPA 600/R-93/116 Method using Polarized Light Microscopy

			Non-Asbestos		Asbestos
Sample	Description	Appearance	% Fibrous	% Non-Fibrous	% Type
A1 322221852-0001	Ext. stucco	Gray/White Non-Fibrous Homogeneous		100% Non-fibrous (Other)	<1% Chrysotile
A2 322221852-0002	Ext. stucco	Gray/White Non-Fibrous Homogeneous		100% Non-fibrous (Other)	<1% Chrysotile
A3-Finish Coat 322221852-0003	Ext. stucco	White Non-Fibrous Homogeneous		100% Non-fibrous (Other)	<1% Chrysotile
A3-Base Coat 322221852-0003A	Ext. stucco	Gray Non-Fibrous Homogeneous		100% Non-fibrous (Other)	None Detected
A4 322221852-0004	Acoustic ceiling (soft)	Gray/White/Gold Non-Fibrous Homogeneous		10% Mica 83% Non-fibrous (Other)	7% Chrysotile
A5 322221852-0005	Acoustic ceiling (soft)	Tan/White/Gold Non-Fibrous Homogeneous		10% Mica 83% Non-fibrous (Other)	7% Chrysotile
A6 322221852-0006	Acoustic ceiling (soft)	Gray/White/Gold Non-Fibrous Homogeneous		5% Mica 89% Non-fibrous (Other)	6% Chrysotile
A7 322221852-0007	Ceiling plaster	White/Beige Non-Fibrous Homogeneous		98% Non-fibrous (Other)	2% Chrysotile
A8 322221852-0008	Ceiling plaster	White/Beige Non-Fibrous Homogeneous		98% Non-fibrous (Other)	2% Chrysotile
A9 322221852-0009	Ceiling plaster	White/Beige Non-Fibrous Homogeneous		98% Non-fibrous (Other)	2% Chrysotile
A10-Wallboard 322221852-0010	Ceiling wb/jc	Brown/White Fibrous Heterogeneous	20% Cellulose	80% Non-fibrous (Other)	None Detected
A10-Joint Compound 322221852-0010A	Ceiling wb/jc	White Non-Fibrous Homogeneous		100% Non-fibrous (Other)	None Detected
A11-Wallboard 322221852-0011	Ceiling wb/jc	Brown/White Fibrous Heterogeneous	20% Cellulose	80% Non-fibrous (Other)	None Detected
A11-Joint Compound 322221852-0011A	Ceiling wb/jc	White Non-Fibrous Homogeneous		100% Non-fibrous (Other)	None Detected
A12-Wallboard 322221852-0012	Ceiling wb/jc	Brown/White Fibrous Heterogeneous	20% Cellulose	80% Non-fibrous (Other)	None Detected
A12-Joint Compound 322221852-0012A	Ceiling wb/jc	White Non-Fibrous Homogeneous		100% Non-fibrous (Other)	None Detected

Initial report from: 11/03/2022 11:05:25

#322222344

LA Testing
520 Mission Street South Pasadena, CA 91030
Tel/Fax: (323) 254-9960 / (323) 254-9982
http://www.LATesting.com / pasadenalab@latesting.com

LA Testing Order: 322221852
Customer ID: 32EEMI45
Customer PO:
Project ID:

Test Report: Asbestos Analysis of Bulk Materials via EPA 600/R-93/116 Method using Polarized Light Microscopy

Sample	Description	Appearance	Non-Asbestos % Fibrous	Non-Asbestos % Non-Fibrous	Asbestos % Type
A13 *322221852-0013*	Wall plaster	Gray/White Non-Fibrous Homogeneous		100% Non-fibrous (Other)	<1% Chrysotile
A14 *322221852-0014*	Wall plaster	Gray/White Non-Fibrous Homogeneous		100% Non-fibrous (Other)	<1% Chrysotile
A15 *322221852-0015*	Wall plaster	Gray/White Non-Fibrous Homogeneous		100% Non-fibrous (Other)	<1% Chrysotile
A16-Cove Base *322221852-0016*	White cb/mastic	Beige Non-Fibrous Homogeneous		100% Non-fibrous (Other)	None Detected
A16-Mastic *322221852-0016A*	White cb/mastic	Beige Non-Fibrous Homogeneous		100% Non-fibrous (Other)	None Detected
A16-Joint Compound *322221852-0016B*	White cb/mastic	White Non-Fibrous Homogeneous		100% Non-fibrous (Other)	None Detected
A17-Cove Base *322221852-0017*	White cb/mastic	White Non-Fibrous Homogeneous		100% Non-fibrous (Other)	None Detected
A17-Mastic *322221852-0017A*	White cb/mastic	Beige Non-Fibrous Homogeneous		100% Non-fibrous (Other)	None Detected
A17-Joint Compound *322221852-0017B*	White cb/mastic	White Non-Fibrous Homogeneous		100% Non-fibrous (Other)	None Detected
A18-Cove Base *322221852-0018*	White cb/mastic	White Non-Fibrous Homogeneous		100% Non-fibrous (Other)	None Detected
A18-Mastic *322221852-0018A*	White cb/mastic	Beige Non-Fibrous Homogeneous		100% Non-fibrous (Other)	None Detected
A18-Joint Compound *322221852-0018B*	White cb/mastic	White Non-Fibrous Homogeneous		100% Non-fibrous (Other)	None Detected
A19-Cove Base *322221852-0019*	Green cb/mastic	Gray Non-Fibrous Homogeneous		100% Non-fibrous (Other)	None Detected
A19-Mastic *322221852-0019A*	Green cb/mastic	Brown Non-Fibrous Homogeneous		100% Non-fibrous (Other)	None Detected
A19-Joint Compound *322221852-0019B*	Green cb/mastic	White Non-Fibrous Homogeneous		100% Non-fibrous (Other)	None Detected
A20-Cove Base *322221852-0020*	Green cb/mastic	Gray Non-Fibrous Homogeneous		100% Non-fibrous (Other)	None Detected
A20-Mastic *322221852-0020A*	Green cb/mastic	Beige Non-Fibrous Homogeneous		100% Non-fibrous (Other)	None Detected
A20-Joint Compound *322221852-0020B*	Green cb/mastic	White Non-Fibrous Homogeneous		100% Non-fibrous (Other)	None Detected
A21-Cove Base *322221852-0021*	Green cb/mastic	Gray Non-Fibrous Homogeneous		100% Non-fibrous (Other)	None Detected

Initial report from: 11/03/2022 11:05:25

EMSL Analytical, Inc
464 McCormick Street, San Leandro, CA 94577
Phone/Fax: (510) 895-3675 / (510) 895-3680
http://www.EMSL.com sanleandrolab@emsl.com

EMSL Order:	092224719
CustomerID:	32EEMI45
CustomerPO:	
ProjectID:	

Attn: **Ellis Environmental Management, Inc.**
Ellis Environmental Management, Inc.
430 Silver Spur Road
Suite 201
Rancho Palos Verdes, CA 90275

Phone:	(310) 544-1837
Fax:	
Received:	10/31/2022 09:00 AM
Collected:	

Project: **22-452**

Test Report: Lead in Paint Chips by Flame AAS (SW 846 3050B/7000B)*

Client Sample Description	*Lab ID*	*Collected*	*Analyzed*	*Weight*	*Lead Concentration*
L1	*092224719-0001*		11/5/2022	0.2551 g	0.074 % wt
	Site: WHITE FRONT DOOR PAINT				
L2	*092224719-0002*		11/5/2022	0.2569 g	0.33 % wt
	Site: WHITE WALL TRIM PAINT				
L4	*092224719-0004*		11/5/2022	0.2547 g	<0.0080 % wt
	Site: WHITE CONCRETE FLOOR PAINT				
L5	*092224719-0005*		11/5/2022	0.2575 g	0.099 % wt
	Site: EGGSHELL WALL PAINT				
L6	*092224719-0006*		11/5/2022	0.2546 g	0.18 % wt
	Site: GRAY STORAGE WALL PAINT				
L7	*092224719-0007*		11/5/2022	0.2517 g	<0.0080 % wt
	Site: WHITE GUTTER PAINT				
L8	*092224719-0008*		11/5/2022	0.2542 g	0.013 % wt
	Site: EXT WHITE PAINT				

Julian Neagu, Lead Laboratory Manager
or other approved signatory

EMSL maintains liability limited to cost of analysis. Interpretation and use of test results are the responsibility of the client. This report relates only to the samples reported above, and may not be reproduced, except in full, without written approval by EMSL. EMSL bears no responsibility for sample collection activities or analytical method limitations. The report reflects the samples as received. Results are generated from the field sampling data (sampling volumes and areas, locations, etc.) provided by the client on the Chain of Custody. Samples are within quality control criteria and met method specifications unless otherwise noted.
* Analysis following Lead in Paint by EMSL SOP/Determination of Environmental Lead by FLAA. Reporting limit is 0.008% wt based on the minimum sample weight per our SOP. "<" (less than) result signifies the analyte was not detected at or above the reporting limit. Measurement of uncertainty is available upon request. Definitions of modifications are available upon request.
Samples analyzed by EMSL Analytical, Inc San Leandro, CA AIHA-LAP, LLC-ELLAP Accredited #101748

Initial report from 11/05/2022 14:02:52

EMSL Analytical, Inc
464 McCormick Street, San Leandro, CA 94577
Phone/Fax: (510) 895-3675 / (510) 895-3680
http://www.EMSL.com sanleandrolab@emsl.com

EMSL Order:	092224719
CustomerID:	32EEMI45
CustomerPO:	
ProjectID:	

Attn: **Ellis Environmental Management, Inc.**
Ellis Environmental Management, Inc.
430 Silver Spur Road
Suite 201
Rancho Palos Verdes, CA 90275

Phone:	(310) 544-1837
Fax:	
Received:	10/31/2022 09:00 AM
Collected:	

Project: **22-452**

Test Report: Total Threshold Limit Concentration (7000B)

Client Sample Description	*Lab ID*	*Collected*	*Analyzed*	*Weight (g)*	*Lead* ***Concentration***
L3	*092224719-0003*		11/4/2022	0.5095 g	76 mg/Kg
	Site: CERAMIC RR WALL TILE				



Julian Neagu, Lead Laboratory Manager
or other approved signatory

EMSL maintains liability limited to cost of analysis. Interpretation and use of test results are the responsibility of the client. This report relates only to the samples reported above, and may not be reproduced, except in full, without written approval by EMSL. EMSL bears no responsibility for sample collection activities or analytical method limitations. The report reflects the samples as received. Results are generated from the field sampling data (sampling volumes and areas, locations, etc.) provided by the client on the Chain of Custody. Samples are within quality control criteria and met method specifications unless otherwise noted. Reporting limit is 40 mg/kg based on a 0.5 gram sample weight. "<" (less than) result signifies that the analyte was not detected at or above the reporting limit. Measurement of uncertainty is available upon request. Definitions of modifications are available upon request.

Samples analyzed by EMSL Analytical, Inc San Leandro, CA Method SW 846 7000B replaces EPA 7420 for lead analysis and is an equivalent method. CA ELAP 1628, AIHA-LAP, LLC-ELLAP Accredited #101748

Initial report from 11/05/2022 14:02:52

092224719

Project No.: ~~22-7~~ 22-452

Client: _____

Location: _____

_____

Ellis ENVIRONMENTAL MANAGEMENT INC.

430 Silver Spur Road, Suite 201
Rancho Palos Verdes, CA 90275
(310) 544-1837 (tel)
(310) 544-2167 (fax)

Sampler: SS

Sheet 4 of 4

CHAIN OF CUSTODY RECORD

Sample Number	Description	QTY Sq. Ft	Date	Time	H20	Air	Solid	Stop At First Positive Layer	Tests Required
A40	Acoustic ceiling ~~(hard)~~ (hard)	~100	10/28/22	AM			✓	✓	Asbestos - PLM
A41	↓	↓	↓	↓			↓	↓	↓
A42	↓	↓	↓	↓			↓	↓	↓
L1	white front door paint		↓	↓			↓		Lead - Flame AAS
L2	white wall/trim paint		↓	↓			↓		↓
L3	ceramic BR wall tile	~200	↓	↓			↓		Lead - TTLC
L4	white concrete floor paint		↓	↓			↓		Lead - Flame AAS
L5	Eggshell wall paint		↓	↓			↓		↓
L6	Gray storage wall paint		↓	↓			↓		↓
L7	white gutter paint		↓	↓			↓		↓
L8	Ext. white paint		↓	↓			↓		↓

Page 1 Of 1

Turnaround: ___ same day ___ 24 hrs. ___ 48 hrs. ___ 3 days (X) 5 days (Standard) ___ 2 weeks

Special Instructions:

Date	Time	Relinquished By: Signature / Printed Name	Received By
10/28/22		Shawn Sokolsky	Annette Wickstrom (WE) 10/28/2022
			LEE FX 10-31-22 9AM 1310

131

OrderID: 092224719

Project No.: 22-452

Client: City of Rolling Hills

Location: 2 Portuguese Bend Rd. Rolling Hills CA, 90274

Sampler: SS

Sheet 1 of 4

ENVIRONMENTAL MANAGEMENT INC.
430 Silver Spur Road, Suite 201
Rancho Palos Verdes, CA 90275
(310) 544-1837 (tel)
(310) 544-2167 (fax)

CHAIN OF CUSTODY RECORD

Sample Number	Description	QTY Sq. Ft	Date	Time	H2O	Air	Solid	Stop At First Positive Layer	Tests Required
A1	Ext. stucco	~500	10/28/22	AM			✓	✓	Asbestos - PLM
A2	↓	↓	↓	↓			↓	↓	↓
A3	↓	↓	↓	↓			↓	↓	↓
A4	Acoustic ceiling (soft)	~2,000	↓	↓			↓	↓	↓
A5	↓	↓	↓	↓			↓	↓	↓
A6	↓	↓	↓	↓			↓	↓	↓
A7	Ceiling plaster	~2,000	↓	↓			↓	↓	↓
A8	↓	↓	↓	↓			↓	↓	↓
A9	↓	↓	↓	↓			↓	↓	↓
A10	Ceiling w/b/c	~800	↓	↓			↓	↓	↓
A11	↓	↓	↓	↓			↓	↓	↓
A12	↓	↓	↓	↓			↓	↓	↓
A13	Wall plaster	~2,000	↓	↓			↓	↓	↓

Page 2 of 4

Turnaround: ____ same day ____ 24 hrs. ____ 48 hrs. ____ 3 days __X__ 5 days (Standard) ____ 2 weeks

Special Instructions:

Date	Time	Relinquished By: Signature / Printed Name	Received By
10/28/22		Shawn Srbalsky	Annette McKissock (NL) 10/28/22 1310
			CZ6 Fx 10-31-22 9AM

OrderID: 092224719

Project No.: 22-452

Client: _____

Location: _____

_____

Ellis ENVIRONMENTAL MANAGEMENT INC.

430 Silver Spur Road, Suite 201
Rancho Palos Verdes, CA 90275
(310) 544-1837 (tel)
(310) 544-2167 (fax)

Sampler: SS

Sheet 2 of 4

CHAIN OF CUSTODY RECORD

Sample Number	Description	QTY Sq. Ft	Date	Time	H20	Air	Solid	Stop At First Positive Layer	Tests Required
A14	wall plaster	~2000	10/28/22	AM			✓	✓	Asbestos-PLM
A15	↓	↓	↓	↓			↓	↓	↓
A16	white CB/mastic	~80	↓	↓			↓	↓	↓
A17	↓	↓	↓	↓			↓	↓	↓
A18	↓	↓	↓	↓			↓	↓	↓
A19	green CB/mastic	~15	↓	↓			↓	↓	↓
A20	↓	↓	↓	↓			↓	↓	↓
A21	↓	↓	↓	↓			↓	↓	↓
A22	linoleum	~300	↓	↓			↓	↓	↓
A23	↓	↓	↓	↓			↓	↓	↓
A24	↓	↓	↓	↓			↓	↓	↓
A25	button linoleum	~100	↓	↓			↓	↓	↓
A26	↓	↓	↓	↓			↓	↓	↓

Page 3 Of 4

Turnaround: ____ same day ____ 24 hrs. ____ 48 hrs. ____ 3 days X 5 days (Standard) ____ 2 weeks

Special Instructions:

Date	Time	Relinquished By: Signature / Printed Name	Received By
10/28/22		Shawn Sokolsky	Annette McGissack (ME) 10/28/2022 1310
			CSE FX 10-31-22 9AM

133

OrderID: 092224719

Project No.: 22-452

Client:

Location:

ENVIRONMENTAL MANAGEMENT INC.
430 Silver Spur Road, Suite 201
Rancho Palos Verdes, CA 90275
(310) 544-1837 (tel)
(310) 544-2167 (fax)

Sampler: SS

Sheet 3 of 4

CHAIN OF CUSTODY RECORD

Sample Number	Description	QTY Sq. Ft	Date	Time	H20	Air	Solid	Stop At First Positive Layer	Tests Required
A27	bottom linoleum	~100	10/25/22	AM			✓	✓	Asbestos - PLM
A28	9" FT/mastic	~150							
A29	↓	↓							
A30									
A31	window putty	~10							
A32									
A33									
A34	Red CB/mastic	~5							
A35									
A36									
A37	carpet glue 4	~2000							
A38									
A39									

Page 4 of

Turnaround: ___ same day ___ 24 hrs. ___ 48 hrs. ___ 3 days X 5 days (Standard) ___ 2 weeks

Special Instructions:

Date	Time	Relinquished By: Signature / Printed Name	Received By
10/28/22		Shawn Silvasy	Annette Nicosia (LE) 10/28/2022 1310
			LTC Ex 10-31-22 9AM

134

OrderID: 092224719

APPENDIX D

ELLIS / LABORATORY CERTIFICATIONS

State of California
Division of Occupational Safety and Health

Certified Site Surveillance Technician

Shawn P Sokolsky

Name



Certification No. **18-6177**

Expires on **05/15/23**

This certification was issued by the Division of Occupational Safety and Health as authorized by Sections 7180 et seq. of the Business and Professions Code.

California Department of PublicHealth

STATE OF CALIFORNIA
DEPARTMENT OF PUBLIC HEALTH

LEAD-RELATED CONSTRUCTION CERTIFICATE

INDIVIDUAL:	CERTIFICATE TYPE:	NUMBER:	EXPIRATION DATE:
	Lead Inspector/Assessor	LRC-00004975	1/8/2023

Shawn Sokolsky

Disclaimer: This document alone should not be relied upon to confirm certification status. Compare the individual's photo and name to another valid form of government issued photo identification. Verify the individual's certification status by searching for Lead-Related Construction Professionals at www.cdph.ca.gov/programs/clppb or calling (800) 597-LEAD

State of California
Division of Occupational Safety and Health
Certified Asbestos Consultant



Name **Ryan C Davidson**

Certification No. **15-5395**

Expires on **05/12/23**

This certification was issued by the Division of Occupational Safety and Health as authorized by Sections 7180 et seq. of the Business and Professions Code.

California Department of PublicHealth

STATE OF CALIFORNIA
DEPARTMENT OF PUBLIC HEALTH

LEAD-RELATED CONSTRUCTION CERTIFICATE

INDIVIDUAL:	CERTIFICATE TYPE:	NUMBER:	EXPIRATION DATE:
	Lead Inspector/Assessor	LRC-00000368	4/19/2023

Ryan Davidson

Disclaimer: This document alone should not be relied upon to confirm certification status. Compare the individual's photo and name to another valid form of government issued photo identification. Verify the individual's certification status by searching for Lead-Related Construction Professionals at www.cdph.ca.gov/programs/clppb or calling (800) 597-LEAD

United States Department of Commerce
National Institute of Standards and Technology

Certificate of Accreditation to ISO/IEC 17025:2017

NVLAP LAB CODE: 200232-0

LA Testing

South Pasadena, CA

is accredited by the National Voluntary Laboratory Accreditation Program for specific services, listed on the Scope of Accreditation, for:

Asbestos Fiber Analysis

This laboratory is accredited in accordance with the recognized International Standard ISO/IEC 17025:2017. This accreditation demonstrates technical competence for a defined scope and the operation of a laboratory quality management system (refer to joint ISO-ILAC-IAF Communique dated January 2009).

2021-07-01 through 2022-06-30

Effective Dates

For the National Voluntary Laboratory Accreditation Program

NVLAP® National Voluntary Laboratory Accreditation Program

SCOPE OF ACCREDITATION TO ISO/IEC 17025:2017

LA Testing
520 Mission Street
South Pasadena, CA 91030
Mr. Jerry Drapala Ph.D.
Phone: (323) 254-9960 Fax: (323) 254-9982
Email: jdrapala@latesting.com
http://www.latesting.com

ASBESTOS FIBER ANALYSIS — NVLAP LAB CODE 200232-0

Bulk Asbestos Analysis

Code	*Description*
18/A01	EPA -- 40 CFR Appendix E to Subpart E of Part 763, Interim Method of the Determination of Asbestos in Bulk Insulation Samples
18/A03	EPA 600/R-93/116: Method for the Determination of Asbestos in Bulk Building Materials

Airborne Asbestos Analysis

Code	*Description*
18/A02	U.S. EPA's "Interim Transmission Electron Microscopy Analytical Methods-Mandatory and Nonmandatory-and Mandatory Section to Determine Completion of Response Actions" as found in 40 CFR, Part 763, Subpart E, Appendix A.

For the National Voluntary Laboratory Accreditation Program

Effective 2021-07-01 through 2022-06-30

APPENDIX E

REGULATORY SUMMARIES / CDPH 8552 FORM

APPLICABLE REGULATIONS – LEAD

California Title 8. Industrial Relations, Division 1, Department of Industrial Relations, Chapter 4, Division of Industrial Safety, Subchapter 4, Construction Safety Orders, Article 4, Dusts, Fumes, Mists, Vapors, and Gases, §1532.1, Lead.

This section applies to all construction work where an employee may be occupationally exposed to lead. All construction work excluded from coverage in the general industry standard for lead by section 5198(a)(2) is covered by this standard. Construction work is defined as work for construction, alteration and/or repair, including painting and decorating. It includes but is not limited to the following:

(1) Demolition or salvage of structures where lead or materials containing lead are present;
(2) Removal or encapsulation of materials containing lead;
(3) New construction, alteration, repair, or renovation of structures, substrates, or portions thereof, that contain lead, or materials containing lead;
(4) Installation of products containing lead;
(5) Lead contamination/emergency cleanup;
(6) Transportation, disposal, storage, or containment of lead or materials containing lead on the site or location at which construction activities are performed, and
(7) Maintenance operations associated with the construction activities described in this subsection.

California Health & Safety Code 17961 et al.
Deems a building to be in violation of state law if it contains lead hazards, and requires local enforcement agencies to enforce provisions related to lead hazards. Makes it a crime for a person to engage in specified acts related to lead hazard evaluation, abatement, and lead-related construction courses unless certified or accredited by the Department. Permits local enforcement agencies to order the abatement of lead hazards or issue a cease and desist order in response to lead hazards.

California Labor Code 6716 to 6717 Lead-Related Activities in Construction Work
Provides for the establishment of standards that protect the health and safety of employees who engage in lead-related construction work, including construction, demolition, renovation and repair.

California Code of Regulations, Title 17, Section 35001
Includes requirements for lead hazard evaluation and abatement activities, accreditation of training providers, and certification of individuals engaged in lead-based paint activities.

LEAD - "TRIGGER TASKS"

(SOURCE: California Title 8 Section 1532.1.)

Following testing, Construction Managers and Superintendents may use the following to decide whether (and for how long) an abatement contractor should be retained during disturbance of painted surfaces.

Paint Categories

1. Lead-Based. >.06% Lead by Weight. Start-to-finish, retain an abatement contractor to perform trigger tasks listed below.
2. Lead-Containing. 0.009 – 0.06% lead by weight. Avoid torching or mechanical grinding; no other special precautions.
3. Non-Lead-Containing <.009% lead by weight. No special lead-related precautions required.

TRIGGER TASKS - Lead-Based Paints Only:

Lowest Exposure Trigger Tasks:

Unless proven otherwise (Negative Exposure Assessment, or "NEA"), assume exposures greater than 50 and up to 500 µg/m3 where lead-based coatings or paint are present:

- manual demolition of structures
- manual scraping
- manual sanding
- heat gun applications
- power tool cleaning with dust collection system
- spray painting with lead
- any other task where employees may be exposed over the PEL.

Medium Exposure Trigger Tasks:

Unless proven otherwise (NEA), assume exposures greater than 500 and up to 2,500 µg/m3 where lead-based coatings or paint are present:

- use of lead-containing mortar
- lead burning
- rivet busting
- power tool cleaning without dust collection systems
- cleanup of dry expendable abrasives
- abrasive blasting enclosure movement and removal

Highest Exposure Trigger Tasks:

Assume exposures greater than 2,500 µg/m3 unless proven otherwise where lead-based coatings or paint are present:

- abrasive blasting
- welding
- cutting
- torch burning

APPLICABLE REGULATIONS – ASBESTOS

Current state and federal regulations pertaining to asbestos are summarized below. The summary is not all-inclusive, and does not address specific removal or disposal requirements for individual materials.

NESHAPS

The National Emission Standard for Hazardous Air Pollutants (NESHAP), regulation 40 CFR Part 61, states that no visible emissions are allowed during building demolition or renovation activities which involve regulated asbestos-containing materials (RACMs). All buildings, regardless of construction date, must be surveyed for ACMs prior to demolition or renovation. The US EPA and/or the local air quality management district which implements US EPA actions must be notified prior to any building demolition, even if no ACMs are present. An ACM is defined as any material with an asbestos content of greater than one percent and which (a) is friable, or (b) Category I non-friable ACM that has or will become friable, or (c) Category II friable ACM that may become or will become crumbled, pulverized, or reduced to powder by the forces expected to act on the material in the course of demolition or renovation.

According to NESHAP, ACM is material containing more than one percent asbestos as determined using the methods specified in Appendix A, Subpart E, 40 CFR Part 763, Section 1, PLM. The NESHAP classifies ACM as friable or non-friable. Friable ACM is ACM that contains more than one percent asbestos and when dry, can be crumbled, pulverized, or reduced to powder by hand pressure.

Non-friable ACM also contains more than one percent asbestos and is further classified as either Category I ACM or Category II ACM. The materials are distinguished by their potential to release fibers when damaged. Category I ACMs are much more likely to release fibers when damaged.

In accordance with the US EPA's NESHAP regulation, facilities planned for renovation or demolition must be surveyed for the total amount of asbestos materials, which must be categorized as friable, Category 1 non-friable, and Category 2 non-friable ACMs.

Southern California Air Quality Management District (SCAQMD)

The SCAQMD is a government agency that regulates sources of air pollution within the area of the Los Angeles and surrounding counties. The District's regulating and enforcement authority comes from federal law. In response to the NESHAP requirements, the SCAQMD implemented Rule 1403 to specify work practice requirements to limit asbestos emissions from building demolition and renovation activities, including the removal and associated disturbance of asbestos-containing materials (ACM). The requirements for demolition and renovation activities include asbestos surveying, notification, ACM removal procedures and time schedules, ACM handling and clean-up procedures, and storage, disposal, and landfilling requirements for asbestos-containing waste materials (ACWM). All operators are required to maintain records, including waste shipment records, and are required to use appropriate warning labels, signs, and markings.

AHERA

The Asbestos Hazard Emergency Response Act (AHERA) requires performance of asbestos surveys and the development of Asbestos Management Plans for all of the nation's primary and secondary schools. The general procedures mandated under AHERA are considered the industry standard and are applied to all surveys performed.

Cal-OSHA

Per Cal-OSHA standards, 1926.1101, Asbestos-Containing Construction Materials (ACCMs) are defined as any material with an asbestos content greater than one-tenth of one percent (>0.1%). Cal-OSHA sets forth work requirements for disturbance of ACCMs including removal operations for all types of ACCMs. The requirements have been classified as Class I, Class II, Class III, or Class IV Asbestos related work. The classes are distinguished by their potential to release fibers. Cal-OSHA prescribes specific engineering controls and work practices for each Class of Asbestos related Work.

1. Class I – This Class refers to removal of ACMs identified as Thermal System Insulation (TSI) or surfacing (sprayed-on or troweled-on) materials. These materials are generally considered friable.
2. Class II – This Class refers to removal of ACMs identified that are not TSI or surfacing materials. These materials are generally considered non-friable.
3. Class III – This Class refers to repair and maintenance operations of all identified ACMs.
4. Class IV – This Class refers to incidental contact with identified ACMs such as custodial staff.

California Health and Safety Code

The California Health and Safety Code 25915 (former Connelly Bill) requires all building owners in the State of California to provide written notification to employees, tenants, and contractors of the presence and location of ACCMs within their buildings. Some exclusion to the notification rule for restricted access areas is allowed. All documentation related to asbestos surveys (and air monitoring) must be made available to employees, tenants, or contractors for review. ACCMs are defined as any materials with an asbestos content greater than one-tenth of one percent (>0.1%). The California Health and Safety Code also require that a seller with any knowledge of ACMs on a property disclose such information or knowledge to other parties involved in a real estate transaction.

Building Demolition / Renovation

In accordance with the US EPA's NESHAPs regulation and the SCAQMD, all structures planned for renovation or demolition must be surveyed for ACMs prior to the planned renovation or demolition. Subsequent removal of identified ACMs is also required. Removal involves, to the greatest extent practical, the complete removal, disposal, and replacement, if necessary, of the ACMs. Removal usually also requires encapsulation of the remaining structure to lock down residual fibers which may exist. Removal of ACMs is required prior to renovation and/or demolition activities. The US EPA and SCAQMD require removal of all RACMs prior to demolition or renovation. RACMs include friable and non-friable (Category I and II) which have or will become friable by demolition or renovation activities.

SECTION 012500 - SUBSTITUTION PROCEDURES

PART 1 - GENERAL

1.1 RELATED DOCUMENTS

A. Drawings and general provisions of the Contract, including General and Supplementary Conditions and other Division 01 Specification Sections, apply to this Section.

1.2 SUMMARY

A. Section includes administrative and procedural requirements for substitutions.

1.3 DEFINITIONS

A. Substitutions: Changes in products, materials, equipment, and methods of construction from those required by the Contract Documents.

1. Substitutions for Cause: Changes proposed by Contractor that are required due to changed Project conditions, such as unavailability of product, regulatory changes, or unavailability of required warranty terms.
2. Substitutions for Convenience: Changes proposed by Contractor or Owner that are not required to meet other Project requirements but may offer advantage to Contractor or Owner.

1.4 ACTION SUBMITTALS

A. Substitution Requests: Submit documentation identifying product or fabrication or installation method to be replaced. Include Specification Section number and title and Drawing numbers and titles.

1. Substitution Request Form: Use form acceptable to Engineer of Record.
2. Documentation: Show compliance with requirements for substitutions and the following, as applicable:

    a. Statement indicating why specified product or fabrication or installation method cannot be provided, if applicable.
    b. Coordination of information, including a list of changes or revisions needed to other parts of the Work and to construction performed by Owner and separate contractors that will be necessary to accommodate proposed substitution.
    c. Detailed comparison of significant qualities of proposed substitutions with those of the Work specified. Include annotated copy of applicable Specification Section. Significant qualities may include attributes, such as performance, weight, size, durability, visual effect, sustainable design characteristics, warranties, and specific

features and requirements indicated. Indicate deviations, if any, from the Work specified.

d. Product Data, including drawings and descriptions of products and fabrication and installation procedures.
e. Samples, where applicable or requested.
f. Certificates and qualification data, where applicable or requested.
g. List of similar installations for completed projects, with project names and addresses as well as names and addresses of Engineers and owners.
h. Material test reports from a qualified testing agency, indicating and interpreting test results for compliance with requirements indicated.
i. Research reports evidencing compliance with building code in effect for Project.
j. Detailed comparison of Contractor's construction schedule using proposed substitutions with products specified for the Work, including effect on the overall Contract Time. If specified product or method of construction cannot be provided within the Contract Time, include letter from manufacturer, on manufacturer's letterhead, stating date of receipt of purchase order, lack of availability, or delays in delivery.
k. Cost information, including a proposal of change, if any, in the Contract Sum.
l. Contractor's certification that proposed substitution complies with requirements in the Contract Documents, except as indicated in substitution request, is compatible with related materials and is appropriate for applications indicated.
m. Contractor's waiver of rights to additional payment or time that may subsequently become necessary because of failure of proposed substitution to produce indicated results.

3. Engineer's Action: If necessary, Engineer will request additional information or documentation for evaluation within 7 days of receipt of a request for substitution. Engineer will notify Contractor of acceptance or rejection of proposed substitution within 15 days of receipt of request, or 7 days of receipt of additional information or documentation, whichever is later.

1.5 QUALITY ASSURANCE

A. Compatibility of Substitutions: Investigate and document compatibility of proposed substitution with related products and materials. Engage a qualified testing agency to perform compatibility tests recommended by manufacturers.

1.6 PROCEDURES

A. Coordination: Revise or adjust affected work as necessary to integrate work of the approved substitutions.

1.7 SUBSTITUTIONS

A. Substitutions for Cause: Submit requests for substitution immediately on discovery of need for change, but not later than 15 days prior to time required for preparation and review of related submittals.

1. Conditions: Engineer will consider Contractor's request for substitution when the following conditions are satisfied. If the following conditions are not satisfied, Engineer will return requests without action, except to record noncompliance with these requirements:

    a. Requested substitution is consistent with the Contract Documents and will produce indicated results.
    b. Substitution request is fully documented and properly submitted.
    c. Requested substitution will not adversely affect Contractor's construction schedule.
    d. Requested substitution has received necessary approvals of authorities having jurisdiction.
    e. Requested substitution is compatible with other portions of the Work.
    f. Requested substitution has been coordinated with other portions of the Work.
    g. Requested substitution provides specified warranty.
    h. If requested substitution involves more than one contractor, requested substitution has been coordinated with other portions of the Work, is uniform and consistent, is compatible with other products, and is acceptable to all contractors involved.

B. Substitutions for Convenience: Not allowed unless otherwise indicated.

PART 2 - PRODUCTS (Not Used)

PART 3 - EXECUTION (Not Used)

END OF SECTION 012500

SECTION 013300 - SUBMITTAL PROCEDURES

PART 1 - GENERAL

1.1 SUMMARY

A. Section Includes:

1. Submittal schedule requirements.
2. Administrative and procedural requirements for submittals.

B. Related Requirements:

1. Section 014000 "Quality Requirements" for submitting test and inspection reports, and schedule of tests and inspections.
2. Section 017700 "Closeout Procedures" for submitting closeout submittals and maintenance material submittals.
3. Section 017823 "Operation and Maintenance Data" for submitting operation and maintenance manuals.
4. Section 017839 "Project Record Documents" for submitting record Drawings, record Specifications, and record Product Data.
5. Section 017900 "Demonstration and Training" for submitting video recordings of demonstration of equipment and training of Owner's personnel.

1.2 DEFINITIONS

A. Action Submittals: Written and graphic information and physical samples that require Engineer's action. Action submittals are those submittals indicated in individual Specification Sections as "action submittals."

B. Informational Submittals: Written and graphic information and physical samples that do not require Engineer's responsive action. Submittals may be rejected for not complying with requirements. Informational submittals are those submittals indicated in individual Specification Sections as "informational submittals."

1.3 SUBMITTAL SCHEDULE

A. Submittal Schedule: Submit, as an action submittal, a list of submittals, arranged in chronological order by dates required by construction schedule. Include time required for review, ordering, manufacturing, fabrication, and delivery when establishing dates. Include additional time required for making corrections or revisions to submittals noted by Engineer and additional time for handling and reviewing submittals required by those corrections.

1. Coordinate submittal schedule with list of subcontracts, the schedule of values, and Contractor's construction schedule.

2. Initial Submittal Schedule: Submit concurrently with startup construction schedule. Include submittals required during the first 60 days of construction. List those submittals required to maintain orderly progress of the Work and those required early because of long lead time for manufacture or fabrication.
3. Final Submittal Schedule: Submit concurrently with the first complete submittal of Contractor's construction schedule.

    a. Submit revised submittal schedule as required to reflect changes in current status and timing for submittals.

4. Format: Arrange the following information in a tabular format:

    a. Scheduled date for first submittal.
    b. Specification Section number and title.
    c. Submittal Category: Action; informational.
    d. Name of subcontractor.
    e. Description of the Work covered.
    f. Scheduled date for Engineer's final release or approval.

1.4 SUBMITTAL FORMATS

A. Submittal Information: Include the following information in each submittal:

1. Project name.
2. Date.
3. Name of Engineer.
4. Name of Construction Manager.
5. Name of Contractor.
6. Name of firm or entity that prepared submittal.
7. Names of subcontractor, manufacturer, and supplier.
8. Unique submittal number, including revision identifier. Include Specification Section number with sequential alphanumeric identifier and alphanumeric suffix for resubmittals.
9. Category and type of submittal.
10. Submittal purpose and description.
11. Number and title of Specification Section, with paragraph number and generic name for each of multiple items.
12. Drawing number and detail references, as appropriate.
13. Indication of full or partial submittal.
14. Location(s) where product is to be installed, as appropriate.
15. Other necessary identification.
16. Remarks.
17. Signature of transmitter.

B. Options: Identify options requiring selection by Engineer.

C. Deviations and Additional Information: On each submittal, clearly indicate deviations from requirements in the Contract Documents, including minor variations and limitations; include relevant additional information and revisions, other than those requested by Engineer on previous submittals. Indicate by highlighting on each submittal or noting on attached separate sheet.

D. Electronic Submittals: Prepare submittals as PDF package, incorporating complete information into each PDF file. Name PDF file with submittal number.

1.5 SUBMITTAL PROCEDURES

A. Prepare and submit submittals required by individual Specification Sections. Types of submittals are indicated in individual Specification Sections.

1. Email: Prepare submittals as PDF package and transmit to Engineer by sending via email. Include PDF transmittal form. Include information in email subject line as requested by Engineer.

    a. Engineer will return annotated file. Annotate and retain one copy of file as a digital Project Record Document file.

2. Web-Based Project Management Software: Prepare submittals in PDF form, and upload to web-based Project management software website. Enter required data in web-based software site to fully identify submittal.
3. Paper: Prepare submittals in paper form and deliver to Engineer.

B. Coordination: Coordinate preparation and processing of submittals with performance of construction activities.

1. Coordinate each submittal with fabrication, purchasing, testing, delivery, other submittals, and related activities that require sequential activity.
2. Submit all submittal items required for each Specification Section concurrently unless partial submittals for portions of the Work are indicated on approved submittal schedule.
3. Submit action submittals and informational submittals required by the same Specification Section as separate packages under separate transmittals.
4. Coordinate transmittal of submittals for related parts of the Work specified in different Sections, so processing will not be delayed because of need to review submittals concurrently for coordination.

    a. Engineer reserves the right to withhold action on a submittal requiring coordination with other submittals until related submittals are received.

C. Processing Time: Allow time for submittal review, including time for resubmittals, as follows. Time for review shall commence on Engineer's receipt of submittal. No extension of the Contract Time will be authorized because of failure to transmit submittals enough in advance of the Work to permit processing, including resubmittals.

1. Initial Review: Allow 15 days for initial review of each submittal. Allow additional time if coordination with subsequent submittals is required. Engineer will advise Contractor when a submittal being processed must be delayed for coordination.
2. Intermediate Review: If intermediate submittal is necessary, process it in same manner as initial submittal.
3. Resubmittal Review: Allow 15 days for review of each resubmittal.
4. Sequential Review: Where sequential review of submittals by Engineer's consultants, Owner, or other parties is indicated, allow 21 days for initial review of each submittal.

5. Concurrent Consultant Review: Where the Contract Documents indicate that submittals may be transmitted simultaneously to Engineer and to Engineer's consultants, allow 15 days for review of each submittal. Submittal will be returned to Engineer before being returned to Contractor.

    a. Submit one copy of submittal to concurrent reviewer in addition to specified number of copies to Engineer.

D. Resubmittals: Make resubmittals in same form and number of copies as initial submittal.

1. Note date and content of previous submittal.
2. Note date and content of revision in label or title block, and clearly indicate extent of revision.
3. Resubmit submittals until they are marked with approval notation from Engineer's action stamp.

E. Distribution: Furnish copies of final submittals to manufacturers, subcontractors, suppliers, fabricators, installers, authorities having jurisdiction, and others as necessary for performance of construction activities. Show distribution on transmittal forms.

F. Use for Construction: Retain complete copies of submittals on Project site. Use only final action submittals that are marked with approval notation from Engineer's action stamp.

1.6 SUBMITTAL REQUIREMENTS

A. Product Data: Collect information into a single submittal for each element of construction and type of product or equipment.

1. If information must be specially prepared for submittal because standard published data are unsuitable for use, submit as Shop Drawings, not as Product Data.
2. Mark each copy of each submittal to show which products and options are applicable.
3. Include the following information, as applicable:

    a. Manufacturer's catalog cuts.
    b. Manufacturer's product specifications.
    c. Standard color charts.
    d. Statement of compliance with specified referenced standards.
    e. Testing by recognized testing agency.
    f. Application of testing agency labels and seals.
    g. Notation of coordination requirements.
    h. Availability and delivery time information.

4. For equipment, include the following in addition to the above, as applicable:

    a. Wiring diagrams that show factory-installed wiring.
    b. Printed performance curves.
    c. Operational range diagrams.
    d. Clearances required to other construction, if not indicated on accompanying Shop Drawings.

5. Submit Product Data before Shop Drawings, and before or concurrently with Samples.

B. Shop Drawings: Prepare Project-specific information, drawn accurately to scale. Do not base Shop Drawings on reproductions of the Contract Documents or standard printed data unless submittal based on Engineer's digital data drawing files is otherwise permitted.

1. Preparation: Fully illustrate requirements in the Contract Documents. Include the following information, as applicable:

   a. Identification of products.
   b. Schedules.
   c. Compliance with specified standards.
   d. Notation of coordination requirements.
   e. Notation of dimensions established by field measurement.
   f. Relationship and attachment to adjoining construction clearly indicated.
   g. Seal and signature of professional engineer if specified.

2. Paper Sheet Size: Except for templates, patterns, and similar full-size Drawings, submit Shop Drawings on sheets at least 8-1/2 by 11 inches (215 by 280 mm), but no larger than 30 by 42 inches (750 by 1067 mm).

   a. Two opaque (bond) copies of each submittal. Engineer will return one copy.

C. Samples: Submit Samples for review of type, color, pattern, and texture for a check of these characteristics with other materials.

1. Transmit Samples that contain multiple, related components, such as accessories together in one submittal package.
2. Identification: Permanently attach label on unexposed side of Samples that includes the following:

   a. Project name and submittal number.
   b. Generic description of Sample.
   c. Product name and name of manufacturer.
   d. Sample source.
   e. Number and title of applicable Specification Section.
   f. Specification paragraph number and generic name of each item.

3. Email Transmittal: Provide PDF transmittal. Include digital image file illustrating Sample characteristics and identification information for record.
4. Web-Based Project Management Software: Prepare submittals in PDF form, and upload to web-based Project software website. Enter required data in web-based software site to fully identify submittal.
5. Disposition: Maintain sets of approved Samples at Project site, available for quality-control comparisons throughout the course of construction activity. Sample sets may be used to determine final acceptance of construction associated with each set.
6. Samples for Initial Selection: Submit manufacturer's color charts consisting of units or sections of units, showing the full range of colors, textures, and patterns available.

a. Number of Samples: Submit one full set(s) of available choices where color, pattern, texture, or similar characteristics are required to be selected from manufacturer's product line. Engineer will return submittal with options selected.

7. Samples for Verification: Submit full-size units or Samples of size indicated, prepared from same material to be used for the Work, cured and finished in manner specified, and physically identical with material or product proposed for use, and that show full range of color and texture variations expected. Samples include, but are not limited to, the following: partial sections of manufactured or fabricated components; small cuts or containers of materials; complete units of repetitively used materials; swatches showing color, texture, and pattern; color range sets; and components used for independent testing and inspection.

   a. Number of Samples: Submit three sets of Samples. Engineer will retain two Sample sets; remainder will be returned.

      1) Submit a single Sample where assembly details, workmanship, fabrication techniques, connections, operation, and other similar characteristics are to be demonstrated.
      2) If variation in color, pattern, texture, or other characteristic is inherent in material or product represented by a Sample, submit at least three sets of paired units that show approximate limits of variations.

D. Product Schedule: As required in individual Specification Sections, prepare a written summary indicating types of products required for the Work and their intended location. Include the following information in tabular form:

1. Type of product. Include unique identifier for each product indicated in the Contract Documents or assigned by Contractor if none is indicated.
2. Manufacturer and product name, and model number if applicable.
3. Number and name of room or space.
4. Location within room or space.

E. Qualification Data: Prepare written information that demonstrates capabilities and experience of firm or person. Include lists of completed projects with project names and addresses, contact information of Engineers and owners, and other information specified.

F. Design Data: Prepare and submit written and graphic information indicating compliance with indicated performance and design criteria in individual Specification Sections. Include list of assumptions and summary of loads. Include load diagrams if applicable. Provide name and version of software, if any, used for calculations. Number each page of submittal.

G. Certificates:

1. Certificates and Certifications Submittals: Submit a statement that includes signature of entity responsible for preparing certification. Certificates and certifications shall be signed by an officer or other individual authorized to sign documents on behalf of that entity. Provide a notarized signature where indicated.
2. Installer Certificates: Submit written statements on manufacturer's letterhead, certifying that Installer complies with requirements in the Contract Documents and, where required, is authorized by manufacturer for this specific Project.

3. Manufacturer Certificates: Submit written statements on manufacturer's letterhead, certifying that manufacturer complies with requirements in the Contract Documents. Include evidence of manufacturing experience where required.
4. Material Certificates: Submit written statements on manufacturer's letterhead, certifying that material complies with requirements in the Contract Documents.
5. Product Certificates: Submit written statements on manufacturer's letterhead, certifying that product complies with requirements in the Contract Documents.
6. Welding Certificates: Prepare written certification that welding procedures and personnel comply with requirements in the Contract Documents. Submit record of AWS B2.1/B2.1M on AWS forms. Include names of firms and personnel certified.

H. Test and Research Reports:

1. Compatibility Test Reports: Submit reports written by a qualified testing agency, on testing agency's standard form, indicating and interpreting results of compatibility tests performed before installation of product. Include written recommendations for substrate preparation and primers required.
2. Field Test Reports: Submit written reports indicating and interpreting results of field tests performed either during installation of product or after product is installed in its final location, for compliance with requirements in the Contract Documents.
3. Material Test Reports: Submit reports written by a qualified testing agency, on testing agency's standard form, indicating and interpreting test results of material for compliance with requirements in the Contract Documents.
4. Preconstruction Test Reports: Submit reports written by a qualified testing agency, on testing agency's standard form, indicating and interpreting results of tests performed before installation of product, for compliance with performance requirements in the Contract Documents.
5. Product Test Reports: Submit written reports indicating that current product produced by manufacturer complies with requirements in the Contract Documents. Base reports on evaluation of tests performed by manufacturer and witnessed by a qualified testing agency, or on comprehensive tests performed by a qualified testing agency.
6. Research Reports: Submit written evidence, from a model code organization acceptable to authorities having jurisdiction, that product complies with building code in effect for Project. Include the following information:

    a. Name of evaluation organization.
    b. Date of evaluation.
    c. Time period when report is in effect.
    d. Product and manufacturers' names.
    e. Description of product.
    f. Test procedures and results.
    g. Limitations of use.

1.7 DELEGATED DESIGN SERVICES

A. Performance and Design Criteria: Where professional design services or certifications by a design professional are specifically required of Contractor by the Contract Documents, provide products and systems complying with specific performance and design criteria indicated.

1. If criteria indicated are insufficient to perform services or certification required, submit a written request for additional information to Engineer.

B. Delegated Design Services Certification: In addition to Shop Drawings, Product Data, and other required submittals, submit digitally signed PDF file and two paper copies of certificate, signed and sealed by the responsible design professional, for each product and system specifically assigned to Contractor to be designed or certified by a design professional.

1. Indicate that products and systems comply with performance and design criteria in the Contract Documents. Include list of codes, loads, and other factors used in performing these services.

1.8 CONTRACTOR'S REVIEW

A. Action Submittals and Informational Submittals: Review each submittal and check for coordination with other Work of the Contract and for compliance with the Contract Documents. Note corrections and field dimensions. Mark with approval stamp before submitting to Engineer.

B. Contractor's Approval: Indicate Contractor's approval for each submittal with a uniform approval stamp. Include name of reviewer, date of Contractor's approval, and statement certifying that submittal has been reviewed, checked, and approved for compliance with the Contract Documents.

1. Engineer will not review submittals received from Contractor that do not have Contractor's review and approval.

1.9 ENGINEER'S REVIEW

A. Action Submittals: Engineer will review each submittal, indicate corrections or revisions required, and return.

1. PDF Submittals: Engineer will indicate, via markup on each submittal, the appropriate action.

2. Submittals by Web-Based Project Management Software: Engineer will indicate, on Project management software website, the appropriate action.

B. Informational Submittals: Engineer will review each submittal and will not return it, or will return it if it does not comply with requirements. Engineer will forward each submittal to appropriate party.

C. Partial submittals prepared for a portion of the Work will be reviewed when use of partial submittals has received prior approval from Engineer.

D. Incomplete submittals are unacceptable, will be considered nonresponsive, and will be returned for resubmittal without review.

E. Engineer will discard submittals received from sources other than Contractor.

F. Submittals not required by the Contract Documents will be returned by Engineer without action.

PART 2 - PRODUCTS (Not Used)

PART 3 - EXECUTION (Not Used)

END OF SECTION 013300

SECTION 013516 - ALTERATION PROJECT PROCEDURES

PART 1 - GENERAL

1.1 SUMMARY

A. Section includes special procedures for alteration work.

1.2 DEFINITIONS

A. Alteration Work: This term includes remodeling, renovation, repair, and maintenance work performed within existing spaces or on existing surfaces as part of the Project.

B. Consolidate: To strengthen loose or deteriorated materials in place.

C. Design Reference Sample: A sample that represents the Engineer's prebid selection of work to be matched; it may be existing work or work specially produced for the Project.

D. Dismantle: To remove by disassembling or detaching an item from a surface, using gentle methods and equipment to prevent damage to the item and surfaces; disposing of items unless indicated to be salvaged or reinstalled.

E. Match: To blend with adjacent construction and manifest no apparent difference in material type, species, cut, form, detail, color, grain, texture, or finish; as approved by Engineer.

F. Refinish: To remove existing finishes to base material and apply new finish to match original, or as otherwise indicated.

G. Repair: To correct damage and defects, retaining existing materials, features, and finishes. This includes patching, piecing-in, splicing, consolidating, or otherwise reinforcing or upgrading materials.

H. Replace: To remove, duplicate, and reinstall entire item with new material. The original item is the pattern for creating duplicates unless otherwise indicated.

I. Replicate: To reproduce in exact detail, materials, and finish unless otherwise indicated.

J. Reproduce: To fabricate a new item, accurate in detail to the original, and from either the same or a similar material as the original, unless otherwise indicated.

K. Retain: To keep an element or detail secure and intact.

L. Strip: To remove existing finish down to base material unless otherwise indicated.

1.3 COORDINATION

A. Alteration Work Subschedule: A construction schedule coordinating the sequencing and scheduling of alteration work for entire Project, including each activity to be performed, and based on Contractor's Construction Schedule. Secure time commitments for performing critical construction activities from separate entities responsible for alteration work.

1. Schedule construction operations in sequence required to obtain best Work results.
2. Coordinate sequence of alteration work activities to accommodate the following:

    a. Owner's continuing occupancy of portions of existing building.
    b. Owner's partial occupancy of completed Work.
    c. Other known work in progress.
    d. Tests and inspections.

3. Detail sequence of alteration work, with start and end dates.
4. Utility Services: Indicate how long utility services will be interrupted. Coordinate shutoff, capping, and continuation of utility services.
5. Use of elevator and stairs.
6. Equipment Data: List gross loaded weight, axle-load distribution, and wheel-base dimension data for mobile and heavy equipment proposed for use in existing structure. Do not use such equipment without certification from Contractor's professional engineer that the structure can support the imposed loadings without damage.

1.4 PROJECT MEETINGS FOR ALTERATION WORK

A. Preliminary Conference for Alteration Work: Before starting alteration work, conduct conference at Project site.

1. Attendees: In addition to representatives of Owner, Engineer, and Contractor, testing service representative, specialists, and chemical-cleaner manufacturer(s) shall be represented at the meeting.
2. Agenda: Discuss items of significance that could affect progress of alteration work, including review of the following:

    a. Alteration Work Subschedule: Discuss and finalize; verify availability of materials, specialists' personnel, equipment, and facilities needed to make progress and avoid delays.
    b. Fire-prevention plan.
    c. Governing regulations.
    d. Areas where existing construction is to remain and the required protection.
    e. Hauling routes.
    f. Sequence of alteration work operations.
    g. Storage, protection, and accounting for salvaged and specially fabricated items.
    h. Existing conditions, staging, and structural loading limitations of areas where materials are stored.
    i. Qualifications of personnel assigned to alteration work and assigned duties.
    j. Requirements for extent and quality of work, tolerances, and required clearances.

k. Embedded work such as flashings and lintels, special details, collection of waste, protection of occupants and the public, and condition of other construction that affects the Work or will affect the work.

3. Reporting: Record conference results and distribute copies to everyone in attendance and to others affected by decisions or actions resulting from conference.

B. Coordination Meetings: Conduct coordination meetings specifically for alteration work at weekly intervals. Coordination meetings are in addition to specific meetings held for other purposes, such as progress meetings and preinstallation conferences.

1. Attendees: In addition to representatives of Owner, Engineer, and Contractor, each specialist, supplier, installer, and other entity concerned with progress or involved in planning, coordination, or performance of alteration work activities shall be represented at these meetings. All participants at conference shall be familiar with Project and authorized to conclude matters relating to alteration work.
2. Agenda: Review and correct or approve minutes of previous coordination meeting. Review other items of significance that could affect progress of alteration work. Include topics for discussion as appropriate to status of Project.

a. Alteration Work Subschedule: Review progress since last coordination meeting. Determine whether each schedule item is on time, ahead of schedule, or behind schedule. Determine how construction behind schedule will be expedited with retention of quality; secure commitments from parties involved to do so. Discuss whether schedule revisions are required to ensure that current and subsequent activities are completed within the Contract Time.
b. Schedule Updating: Revise Contractor's Alteration Work Subschedule after each coordination meeting where revisions to schedule have been made or recognized. Issue revised schedule concurrently with report of each meeting.
c. Review present and future needs of each entity present, including review items listed in the "Preliminary Conference for Alteration Work" Paragraph in this article and the following:

1) Interface requirements of alteration work with other Project Work.
2) Status of submittals for alteration work.
3) Access to alteration work locations.
4) Effectiveness of fire-prevention plan.
5) Quality and work standards of alteration work.
6) Change Orders for alteration work.

3. Reporting: Record meeting results and distribute copies to everyone in attendance and to others affected by decisions or actions resulting from each meeting.

1.5 MATERIALS OWNERSHIP

A. Historic items, relics, and similar objects including, but not limited to, cornerstones and their contents, commemorative plaques and tablets, antiques, and other items of interest or value to Owner that may be encountered or uncovered during the Work, regardless of whether they were previously documented, remain Owner's property.

1. Carefully dismantle and salvage each item or object in a manner to prevent damage and protect it from damage, then promptly deliver it to Owner where directed at Project site.

1.6 INFORMATIONAL SUBMITTALS

A. Alteration Work Subschedule:

1. Submit alteration work subschedule within seven days of date established for commencement of alteration work.

B. Preconstruction Documentation: Show preexisting conditions of adjoining construction and site improvements that are to remain, including finish surfaces, that might be misconstrued as damage caused by Contractor's alteration work operations.

C. Alteration Work Program: Submit 30 days before work begins.

D. Fire-Prevention Plan: Submit 30 days before work begins.

1.7 QUALITY ASSURANCE

A. Alteration Work Program: Prepare a written plan for alteration work for whole Project, including each phase or process and protection of surrounding materials during operations. Show compliance with indicated methods and procedures specified in this and other Sections. Coordinate this whole-Project alteration work program with specific requirements of programs required in other alteration work Sections.

1. Dust and Noise Control: Include locations of proposed temporary dust- and noise-control partitions and means of egress from occupied areas coordinated with continuing on-site operations and other known work in progress.
2. Debris Hauling: Include plans clearly marked to show debris hauling routes, turning radii, and locations and details of temporary protective barriers.

B. Fire-Prevention Plan: Prepare a written plan for preventing fires during the Work, including placement of fire extinguishers, fire blankets, rag buckets, and other fire-control devices during each phase or process. Coordinate plan with Owner's fire-protection equipment and requirements. Include fire-watch personnel's training, duties, and authority to enforce fire safety.

C. Safety and Health Standard: Comply with ANSI/ASSP A10.6.

1.8 STORAGE AND HANDLING OF SALVAGED MATERIALS

A. Salvaged Materials:

1. Clean loose dirt and debris from salvaged items unless more extensive cleaning is indicated.
2. Pack or crate items after cleaning; cushion against damage during handling. Label contents of containers.

3. Store items in a secure area until delivery to Owner.
4. Transport items to Owner's storage area designated by Owner.
5. Protect items from damage during transport and storage.

B. Salvaged Materials for Reinstallation:

1. Repair and clean items for reuse as indicated.
2. Pack or crate items after cleaning and repairing; cushion against damage during handling. Label contents of containers.
3. Protect items from damage during transport and storage.
4. Reinstall items in locations indicated. Comply with installation requirements for new materials and equipment unless otherwise indicated. Provide connections, supports, and miscellaneous materials to make items functional for use indicated.

C. Existing Materials to Remain: Protect construction indicated to remain against damage and soiling from construction work. Where permitted by Engineer, items may be dismantled and taken to a suitable, protected storage location during construction work and reinstalled in their original locations after alteration and other construction work in the vicinity is complete.

D. Storage: Catalog and store items within a weathertight enclosure where they are protected from moisture, weather, condensation, and freezing temperatures.

1. Identify each item for reinstallation with a nonpermanent mark to document its original location. Indicate original locations on plans, elevations, sections, or photographs by annotating the identifying marks.
2. Secure stored materials to protect from theft.
3. Control humidity so that it does not exceed 85 percent. Maintain temperatures 5 deg F (3 deg C) or more above the dew point.

E. Storage Space:

1. Arrange for off-site locations for storage and protection of salvaged material that cannot be stored and protected on-site.

1.9 FIELD CONDITIONS

A. Survey of Existing Conditions: Record existing conditions that affect the Work by use of measured drawings and preconstruction photographs.

B. Discrepancies: Notify Engineer of discrepancies between existing conditions and Drawings before proceeding with removal and dismantling work.

C. Size Limitations in Existing Spaces: Materials, products, and equipment used for performing the Work and for transporting debris, materials, and products shall be of sizes that clear surfaces within existing spaces, areas, rooms, and openings, including temporary protection, by 12 inches (300 mm) or more.

PART 2 - PRODUCTS - (Not Used)

PART 3 - EXECUTION

3.1 PROTECTION

A. Protect persons, motor vehicles, surrounding surfaces of building, building site, plants, and surrounding buildings from harm resulting from alteration work.

1. Use only proven protection methods, appropriate to each area and surface being protected.
2. Provide temporary barricades, barriers, and directional signage to exclude the public from areas where alteration work is being performed.
3. Erect temporary barriers to form and maintain fire-egress routes.
4. Erect temporary protective covers over walkways and at points of pedestrian and vehicular entrance and exit that must remain in service during alteration work.
5. Contain dust and debris generated by alteration work, and prevent it from reaching the public or adjacent surfaces.
6. Provide shoring, bracing, and supports as necessary. Do not overload structural elements.
7. Protect floors and other surfaces along hauling routes from damage, wear, and staining.
8. Provide supplemental sound-control treatment to isolate demolition work from other areas of the building.

B. Temporary Protection of Materials to Remain:

1. Protect existing materials with temporary protections and construction. Do not remove existing materials unless otherwise indicated.
2. Do not attach temporary protection to existing surfaces except as indicated as part of the alteration work program.

C. Comply with each product manufacturer's written instructions for protections and precautions. Protect against adverse effects of products and procedures on people and adjacent materials, components, and vegetation.

D. Utility and Communications Services:

1. Notify Owner, Engineer, authorities having jurisdiction, and entities owning or controlling wires, conduits, pipes, and other services affected by alteration work before commencing operations.
2. Disconnect and cap pipes and services as required by authorities having jurisdiction, as required for alteration work.
3. Maintain existing services unless otherwise indicated; keep in service, and protect against damage during operations. Provide temporary services during interruptions to existing utilities.

E. Existing Drains: Prior to the start of work in an area, test drainage system to ensure that it is functioning properly. Notify Engineer immediately of inadequate drainage or blockage. Do not begin work in an area until the drainage system is functioning properly.

1. Prevent solids such as adhesive or mortar residue or other debris from entering the drainage system. Clean out drains and drain lines that become sluggish or blocked by sand or other materials resulting from alteration work.
2. Protect drains from pollutants. Block drains or filter out sediments, allowing only clean water to pass.

3.2 PROTECTION FROM FIRE

A. General: Follow fire-prevention plan and the following:

1. Comply with NFPA 241 requirements unless otherwise indicated. Perform duties titled "Owner's Responsibility for Fire Protection."
2. Remove and keep area free of combustibles, including rubbish, paper, waste, and chemicals, unless necessary for the immediate work.

    a. If combustible material cannot be removed, provide fire blankets to cover such materials.

B. Heat-Generating Equipment and Combustible Materials: Comply with the following procedures while performing work with heat-generating equipment or combustible materials, including welding, torch-cutting, soldering, brazing, removing paint with heat, or other operations where open flames or implements using high heat or combustible solvents and chemicals are anticipated:

1. Obtain Owner's approval for operations involving use of open-flame or welding or other high-heat equipment. Notify Owner at least 72 hours before each occurrence, indicating location of such work.
2. As far as practicable, restrict heat-generating equipment to shop areas or outside the building.
3. Do not perform work with heat-generating equipment in or near rooms or in areas where flammable liquids or explosive vapors are present or thought to be present. Use a combustible gas indicator test to ensure that the area is safe.
4. Use fireproof baffles to prevent flames, sparks, hot gases, or other high-temperature material from reaching surrounding combustible material.
5. Prevent the spread of sparks and particles of hot metal through open windows, doors, holes, and cracks in floors, walls, ceilings, roofs, and other openings.
6. Fire Watch: Before working with heat-generating equipment or combustible materials, station personnel to serve as a fire watch at each location where such work is performed. Fire-watch personnel shall have the authority to enforce fire safety. Station fire watch according to NFPA 51B, NFPA 241, and as follows:

    a. Train each fire watch in the proper operation of fire-control equipment and alarms.
    b. Cease work with heat-generating equipment whenever fire-watch personnel are not present.

C. Fire-Control Devices: Provide and maintain fire extinguishers, fire blankets, and rag buckets for disposal of rags with combustible liquids. Maintain each as suitable for the type of fire risk in each work area. Ensure that nearby personnel and the fire-watch personnel are trained in fire-extinguisher and blanket use.

3.3 PROTECTION DURING APPLICATION OF CHEMICALS

A. Protect motor vehicles, surrounding surfaces of building, building site, plants, and surrounding buildings from harm or spillage resulting from applications of chemicals and adhesives.

B. Cover adjacent surfaces with protective materials that are proven to resist chemicals selected for Project unless chemicals being used will not damage adjacent surfaces as indicated in alteration work program. Use covering materials and masking agents that are waterproof and UV resistant and that will not stain or leave residue on surfaces to which they are applied. Apply protective materials according to manufacturer's written instructions. Do not apply liquid masking agents or adhesives to painted or porous surfaces. When no longer needed, promptly remove protective materials.

C. Do not apply chemicals during winds of sufficient force to spread them to unprotected surfaces.

D. Neutralize alkaline and acid wastes and legally dispose of off Owner's property.

E. Collect and dispose of runoff from chemical operations by legal means and in a manner that prevents soil contamination, soil erosion, undermining of paving and foundations, damage to landscaping, or water penetration into building interior.

3.4 GENERAL ALTERATION WORK

A. Have specialty work performed only by qualified specialists.

B. Ensure that supervisory personnel are present when work begins and during its progress.

C. Record existing work before each procedure (preconstruction), and record progress during the work. Use digital preconstruction documentation photographs. Comply with requirements in Section 013233 "Photographic Documentation."

D. Perform surveys of Project site as the Work progresses to detect hazards resulting from alterations.

E. Notify Engineer of visible changes in the integrity of material or components whether from environmental causes including biological attack, UV degradation, freezing, or thawing or from structural defects including cracks, movement, or distortion.

1. Do not proceed with the work in question until directed by Engineer.

END OF SECTION 013516

SECTION 014000 - QUALITY REQUIREMENTS

PART 1 - GENERAL

1.1 SUMMARY

A. Section includes administrative and procedural requirements for quality assurance and quality control.

B. Testing and inspection services are required to verify compliance with requirements specified or indicated. These services do not relieve Contractor of responsibility for compliance with the Contract Document requirements.

1. Specific quality-assurance and quality-control requirements for individual work results are specified in their respective Specification Sections. Requirements in individual Sections may also cover production of standard products.
2. Specified tests, inspections, and related actions do not limit Contractor's other quality-assurance and quality-control procedures that facilitate compliance with the Contract Document requirements.
3. Requirements for Contractor to provide quality-assurance and quality-control services required by Architect, Owner, Commissioning Authority or authorities having jurisdiction are not limited by provisions of this Section.

1.2 DEFINITIONS

A. Experienced: When used with an entity or individual, "experienced," unless otherwise further described, means having successfully completed a minimum of five previous projects similar in nature, size, and extent to this Project; being familiar with special requirements indicated; and having complied with requirements of authorities having jurisdiction.

B. Field Quality-Control Tests and Inspections: Tests and inspections that are performed on-site for installation of the Work and for completed Work.

C. Installer/Applicator/Erector: Contractor or another entity engaged by Contractor as an employee, subcontractor, or sub-subcontractor, to perform a particular construction operation, including installation, erection, application, assembly, and similar operations.

1. Use of trade-specific terminology in referring to a Work result does not require that certain construction activities specified apply exclusively to specific trade(s).

D. Preconstruction Testing: Tests and inspections performed specifically for Project before products and materials are incorporated into the Work, to verify performance or compliance with specified criteria. Unless otherwise indicated, copies of reports of tests or inspections performed for other than the Project do not meet this definition.

E. Product Tests: Tests and inspections that are performed by a nationally recognized testing laboratory (NRTL) according to 29 CFR 1910.7, by a testing agency accredited according to

NIST's National Voluntary Laboratory Accreditation Program (NVLAP), or by a testing agency qualified to conduct product testing and acceptable to authorities having jurisdiction, to establish product performance and compliance with specified requirements.

F. Source Quality-Control Tests and Inspections: Tests and inspections that are performed at the source (e.g., plant, mill, factory, or shop).

G. Testing Agency: An entity engaged to perform specific tests, inspections, or both. The term "testing laboratory" has the same meaning as the term "testing agency."

H. Quality-Assurance Services: Activities, actions, and procedures performed before and during execution of the Work, to guard against defects and deficiencies and substantiate that proposed construction will comply with requirements.

I. Quality-Control Services: Tests, inspections, procedures, and related actions during and after execution of the Work, to evaluate that actual products incorporated into the Work and completed construction comply with requirements. Contractor's quality-control services do not include contract administration activities performed by Architect or Construction Manager.

1.3 DELEGATED DESIGN SERVICES

A. Performance and Design Criteria: Where professional design services or certifications by a design professional are specifically required of Contractor by the Contract Documents, provide products and systems complying with specific performance and design criteria indicated.

1. If criteria indicated are not sufficient to perform services or certification required, submit a written request for additional information to Architect.

B. Delegated Design Services Statement: Submit a statement signed and sealed by the responsible design professional, for each product and system specifically assigned to Contractor to be designed or certified by a design professional, indicating that the products and systems are in compliance with performance and design criteria indicated. Include list of codes, loads, and other factors used in performing these services.

1.4 CONFLICTING REQUIREMENTS

A. Conflicting Standards and Other Requirements: If compliance with two or more standards or requirements is specified and the standards or requirements establish different or conflicting requirements for minimum quantities or quality levels, inform the Architect regarding the conflict and obtain clarification prior to proceeding with the Work. Refer conflicting requirements that are different, but apparently equal, to Architect for clarification before proceeding.

B. Minimum Quantity or Quality Levels: The quantity or quality level shown or specified is the minimum provided or performed. The actual installation may comply exactly with the minimum quantity or quality specified, or it may exceed the minimum within reasonable limits. To comply with these requirements, indicated numeric values are minimum or maximum, as appropriate, for the context of requirements. Refer uncertainties to Architect for a decision before proceeding.

1.5 INFORMATIONAL SUBMITTALS

A. Contractor's Quality-Control Plan: For quality-assurance and quality-control activities and responsibilities.

B. Qualification Data: For Contractor's quality-control personnel.

C. Contractor's Statement of Responsibility: When required by authorities having jurisdiction, submit copy of written statement of responsibility submitted to authorities having jurisdiction before starting work on the following systems:

1. Seismic-force-resisting system, designated seismic system, or component listed in the Statement of Special Inspections.
2. Primary wind-force-resisting system or a wind-resisting component listed in the Statement of Special Inspections.

D. Testing Agency Qualifications: For testing agencies specified in "Quality Assurance" Article to demonstrate their capabilities and experience. Include proof of qualifications in the form of a recent report on the inspection of the testing agency by a recognized authority.

E. Schedule of Tests and Inspections: Prepare in tabular form and include the following:

1. Specification Section number and title.
2. Entity responsible for performing tests and inspections.
3. Description of test and inspection.
4. Identification of applicable standards.
5. Identification of test and inspection methods.
6. Number of tests and inspections required.
7. Time schedule or time span for tests and inspections.
8. Requirements for obtaining samples.
9. Unique characteristics of each quality-control service.

F. Reports: Prepare and submit certified written reports and documents as specified.

G. Permits, Licenses, and Certificates: For Owner's record, submit copies of permits, licenses, certifications, inspection reports, releases, jurisdictional settlements, notices, receipts for fee payments, judgments, correspondence, records, and similar documents established for compliance with standards and regulations bearing on performance of the Work.

1.6 CONTRACTOR'S QUALITY-CONTROL PLAN

A. Quality-Control Plan, General: Submit quality-control plan within 10 days of Notice of Award, and not less than five days prior to preconstruction conference. Submit in format acceptable to Architect. Identify personnel, procedures, controls, instructions, tests, records, and forms to be used to carry out Contractor's quality-assurance and quality-control responsibilities and to coordinate Owner's quality-assurance and quality-control activities. Coordinate with Contractor's Construction Schedule.

B. Quality-Control Personnel Qualifications: Engage qualified personnel trained and experienced in managing and executing quality-assurance and quality-control procedures similar in nature and extent to those required for Project.

1. Project quality-control manager may also serve as Project superintendent.

C. Submittal Procedure: Describe procedures for ensuring compliance with requirements through review and management of submittal process. Indicate qualifications of personnel responsible for submittal review.

D. Testing and Inspection: In quality-control plan, include a comprehensive schedule of Work requiring testing or inspection, including the following:

1. Contractor-performed tests and inspections, including subcontractor-performed tests and inspections. Include required tests and inspections and Contractor-elected tests and inspections. Distinguish source quality-control tests and inspections from field quality-control tests and inspections.
2. Special inspections required by authorities having jurisdiction and indicated on the Statement of Special Inspections.

E. Continuous Inspection of Workmanship: Describe process for continuous inspection during construction to identify and correct deficiencies in workmanship in addition to testing and inspection specified. Indicate types of corrective actions to be required to bring the Work into compliance with standards of workmanship established by Contract requirements and approved mockups.

F. Monitoring and Documentation: Maintain testing and inspection reports, including log of approved and rejected results. Include Work Architect has indicated as nonconforming or defective. Indicate corrective actions taken to bring nonconforming Work into compliance with requirements. Comply with requirements of authorities having jurisdiction.

1.7 REPORTS AND DOCUMENTS

A. Test and Inspection Reports: Prepare and submit certified written reports specified in other Sections. Include the following:

1. Date of issue.
2. Project title and number.
3. Name, address, telephone number, and email address of testing agency.
4. Dates and locations of samples and tests or inspections.
5. Names of individuals making tests and inspections.
6. Description of the Work and test and inspection method.
7. Identification of product and Specification Section.
8. Complete test or inspection data.
9. Test and inspection results and an interpretation of test results.
10. Record of temperature and weather conditions at time of sample-taking and testing and inspection.
11. Comments or professional opinion on whether tested or inspected Work complies with the Contract Document requirements.
12. Name and signature of laboratory inspector.

13. Recommendations on retesting and reinspecting.

B. Manufacturer's Technical Representative's Field Reports: Prepare written information documenting manufacturer's technical representative's tests and inspections specified in other Sections. Include the following:

1. Name, address, telephone number, and email address of technical representative making report.
2. Statement on condition of substrates and their acceptability for installation of product.
3. Statement that products at Project site comply with requirements.
4. Summary of installation procedures being followed, whether they comply with requirements and, if not, what corrective action was taken.
5. Results of operational and other tests and a statement of whether observed performance complies with requirements.
6. Statement of whether conditions, products, and installation will affect warranty.
7. Other required items indicated in individual Specification Sections.

C. Factory-Authorized Service Representative's Reports: Prepare written information documenting manufacturer's factory-authorized service representative's tests and inspections specified in other Sections. Include the following:

1. Name, address, telephone number, and email address of factory-authorized service representative making report.
2. Statement that equipment complies with requirements.
3. Results of operational and other tests and a statement of whether observed performance complies with requirements.
4. Statement of whether conditions, products, and installation will affect warranty.
5. Other required items indicated in individual Specification Sections.

1.8 QUALITY ASSURANCE

A. Qualifications paragraphs in this article establish the minimum qualification levels required; individual Specification Sections specify additional requirements.

B. Manufacturer Qualifications: A firm experienced in manufacturing products or systems similar to those indicated for this Project and with a record of successful in-service performance, as well as sufficient production capacity to produce required units. As applicable, procure products from manufacturers able to meet qualification requirements, warranty requirements, and technical or factory-authorized service representative requirements.

C. Fabricator Qualifications: A firm experienced in producing products similar to those indicated for this Project and with a record of successful in-service performance, as well as sufficient production capacity to produce required units.

D. Installer Qualifications: A firm or individual experienced in installing, erecting, applying, or assembling work similar in material, design, and extent to that indicated for this Project, whose work has resulted in construction with a record of successful in-service performance.

E. Professional Engineer Qualifications: A professional engineer who is legally qualified to practice in jurisdiction where Project is located and who is experienced in providing

engineering services of the kind indicated. Engineering services are defined as those performed for installations of the system, assembly, or product that is similar in material, design, and extent to those indicated for this Project.

F. Specialists: Certain Specification Sections require that specific construction activities be performed by entities who are recognized experts in those operations. Specialists will satisfy qualification requirements indicated and engage in the activities indicated.

1. Requirements of authorities having jurisdiction supersede requirements for specialists.

G. Testing and Inspecting Agency Qualifications: An NRTL, an NVLAP, or an independent agency with the experience and capability to conduct testing and inspection indicated, as documented in accordance with ASTM E329, and with additional qualifications specified in individual Sections; and, where required by authorities having jurisdiction, that is acceptable to authorities.

H. Manufacturer's Technical Representative Qualifications: An authorized representative of manufacturer who is trained and approved by manufacturer to observe and inspect installation of manufacturer's products that are similar in material, design, and extent to those indicated for this Project.

I. Factory-Authorized Service Representative Qualifications: An authorized representative of manufacturer who is trained and approved by manufacturer to inspect, demonstrate, repair, and perform service on installations of manufacturer's products that are similar in material, design, and extent to those indicated for this Project.

J. Preconstruction Testing: Where testing agency is indicated to perform preconstruction testing for compliance with specified requirements for performance and test methods, comply with the following Contractor's responsibilities, including the following:

1. Provide test specimens representative of proposed products and construction.
2. Submit specimens in a timely manner with sufficient time for testing and analyzing results to prevent delaying the Work.
3. Provide sizes and configurations of test assemblies, mockups, and laboratory mockups to adequately demonstrate capability of products to comply with performance requirements.
4. When testing is complete, remove test specimens and test assemblies; do not reuse products on Project.
5. Testing Agency Responsibilities: Submit a certified written report of each test, inspection, and similar quality-assurance service to Architect and Commissioning Authority, with copy to Contractor. Interpret tests and inspections, and state in each report whether tested and inspected Work complies with or deviates from the Contract Documents.

1.9 QUALITY CONTROL

1. Engage a qualified testing agency to perform quality-control services.

a. Contractor will not employ same entity engaged by Owner, unless agreed to in writing by Owner.

2. Notify testing agencies at least 24 hours in advance of time when Work that requires testing or inspection will be performed.
3. Where quality-control services are indicated as Contractor's responsibility, submit a certified written report, in duplicate, of each quality-control service.
4. Testing and inspection requested by Contractor and not required by the Contract Documents are Contractor's responsibility.
5. Submit additional copies of each written report directly to authorities having jurisdiction, when they so direct.

B. Retesting/Reinspecting: Regardless of whether original tests or inspections were Contractor's responsibility, provide quality-control services, including retesting and reinspecting, for construction that replaced Work that failed to comply with the Contract Documents.

C. Testing Agency Responsibilities: Cooperate with Architect, Commissioning Authority, and Contractor in performance of duties. Provide qualified personnel to perform required tests and inspections.

1. Notify Architect, Commissioning Authority, and Contractor promptly of irregularities or deficiencies observed in the Work during performance of its services.
2. Determine the locations from which test samples will be taken and in which in-situ tests are conducted.
3. Conduct and interpret tests and inspections, and state in each report whether tested and inspected Work complies with or deviates from requirements.
4. Submit a certified written report, in duplicate, of each test, inspection, and similar quality-control service through Contractor.
5. Do not release, revoke, alter, or increase the Contract Document requirements or approve or accept any portion of the Work.
6. Do not perform duties of Contractor.

D. Manufacturer's Field Services: Where indicated, engage a factory-authorized service representative to inspect field-assembled components and equipment installation, including service connections. Report results in writing as specified in Section 013300 "Submittal Procedures."

E. Manufacturer's Technical Services: Where indicated, engage a manufacturer's technical representative to observe and inspect the Work. Manufacturer's technical representative's services include participation in preinstallation conferences, examination of substrates and conditions, verification of materials, observation of Installer activities, inspection of completed portions of the Work, and submittal of written reports.

F. Contractor's Associated Requirements and Services: Cooperate with agencies and representatives performing required tests, inspections, and similar quality-control services, and provide reasonable auxiliary services as requested. Notify agency sufficiently in advance of operations to permit assignment of personnel. Provide the following:

1. Access to the Work.
2. Incidental labor and facilities necessary to facilitate tests and inspections.
3. Adequate quantities of representative samples of materials that require testing and inspection. Assist agency in obtaining samples.

G. Coordination: Coordinate sequence of activities to accommodate required quality-assurance and quality-control services with a minimum of delay and to avoid necessity of removing and replacing construction to accommodate testing and inspection.

1. Schedule times for tests, inspections, obtaining samples, and similar activities.

PART 2 - PRODUCTS (Not Used)

PART 3 - EXECUTION

3.1 TEST AND INSPECTION LOG

A. Test and Inspection Log: Prepare a record of tests and inspections. Include the following:

1. Date test or inspection was conducted.
2. Description of the Work tested or inspected.
3. Date test or inspection results were transmitted to Architect.
4. Identification of testing agency or special inspector conducting test or inspection.

B. Maintain log at Project site. Post changes and revisions as they occur. Provide access to test and inspection log for Architect's, Commissioning Authority's, and authorities' having jurisdiction reference during normal working hours.

1. Submit log at Project closeout as part of Project Record Documents.

3.2 REPAIR AND PROTECTION

A. General: On completion of testing, inspection, sample-taking, and similar services, repair damaged construction and restore substrates and finishes.

1. Provide materials and comply with installation requirements specified in other Specification Sections or matching existing substrates and finishes. Restore patched areas and extend restoration into adjoining areas with durable seams that are as invisible as possible. Comply with the Contract Document requirements for cutting and patching in Section 017300 "Execution."

B. Protect construction exposed by or for quality-control service activities.

C. Repair and protection are Contractor's responsibility, regardless of the assignment of responsibility for quality-control services.

END OF SECTION 014000

SECTION 017300 - EXECUTION

PART 1 - GENERAL

1.1 SUMMARY

A. Section includes general administrative and procedural requirements governing execution of the Work, including, but not limited to, the following:

1. Construction layout.
2. Field engineering.
3. Installation.
4. Cutting and patching.
5. Coordination of Owner's portion of the Work.
6. Progress cleaning.
7. Starting and adjusting.
8. Protection of installed construction.
9. Correction of the Work.

B. Related Requirements:

1. Section 013300 "Submittal Procedures" for submitting surveys.
2. Section 017700 "Closeout Procedures" for submitting final property survey with Project Record Documents, recording of Owner-accepted deviations from indicated lines and levels, replacing defective work, and final cleaning.
3. Section 024119 "Selective Demolition" for demolition and removal of selected portions of the building.

1.2 DEFINITIONS

A. Cutting: Removal of in-place construction necessary to permit installation or performance of subsequent work.

B. Patching: Fitting and repair work required to restore construction to original conditions after installation of subsequent work.

1.3 PREINSTALLATION MEETINGS

A. Cutting and Patching Conference: Conduct conference at Project site.

1. Prior to commencing work requiring cutting and patching, review extent of cutting and patching anticipated and examine procedures for ensuring satisfactory result from cutting and patching work. Inform Engineer of scheduled meeting. Require representatives of each entity directly concerned with cutting and patching to attend, including the following:

a. Contractor's superintendent.
b. Trade supervisor responsible for cutting operations.
c. Trade supervisor(s) responsible for patching of each type of substrate.
d. Mechanical, electrical, and utilities subcontractors' supervisors, to the extent each trade is affected by cutting and patching operations.

2. Review areas of potential interference and conflict. Coordinate procedures and resolve potential conflicts before proceeding.

1.4 QUALITY ASSURANCE

A. Professional Engineer Qualifications: Refer to Section 014000 "Quality Requirements."

B. Cutting and Patching: Comply with requirements for and limitations on cutting and patching of construction elements.

1. Structural Elements: When cutting and patching structural elements, or when encountering the need for cutting and patching of elements whose structural function is not known, notify Engineer of locations and details of cutting and await directions from Engineer before proceeding. Shore, brace, and support structural elements during cutting and patching. Do not cut and patch structural elements in a manner that could change their load-carrying capacity or increase deflection.
2. Operational Elements: Do not cut and patch operating elements and related components in a manner that results in reducing their capacity to perform as intended or that results in increased maintenance or decreased operational life or safety.
3. Other Construction Elements: Do not cut and patch other construction elements or components in a manner that could change their load-carrying capacity, that results in reducing their capacity to perform as intended, or that results in increased maintenance or decreased operational life or safety.
4. Visual Elements: Do not cut and patch construction in a manner that results in visual evidence of cutting and patching. Do not cut and patch exposed construction in a manner that would, in Engineer's opinion, reduce the building's aesthetic qualities. Remove and replace construction that has been cut and patched in a visually unsatisfactory manner.

C. Manufacturer's Installation Instructions: Obtain and maintain on-site manufacturer's written recommendations and instructions for installation of specified products and equipment.

PART 2 - PRODUCTS

2.1 MATERIALS

A. Comply with requirements specified in other Sections.

1. For projects requiring compliance with sustainable design and construction practices and procedures, use products for patching that comply with sustainable design requirements.

B. In-Place Materials: Use materials for patching identical to in-place materials. For exposed surfaces, use materials that visually match in-place adjacent surfaces to the fullest extent possible.

1. If identical materials are unavailable or cannot be used, use materials that, when installed, will provide a match acceptable to Engineer for the visual and functional performance of in-place materials. Use materials that are not considered hazardous.

C. Cleaning Agents: Use cleaning materials and agents recommended by manufacturer or fabricator of the surface to be cleaned. Do not use cleaning agents that are potentially hazardous to health or property or that might damage finished surfaces.

1. Use cleaning products that comply with Green Seal's GS-37, or if GS-37 is not applicable, use products that comply with the California Code of Regulations maximum allowable VOC levels.

PART 3 - EXECUTION

3.1 EXAMINATION

A. Existing Conditions: The existence and location of underground and other utilities and construction indicated as existing are not guaranteed. Before beginning sitework, investigate and verify the existence and location of underground utilities, and other construction affecting the Work.

1. Before construction, verify the location and invert elevation at points of connection of sanitary sewer, storm sewer, gas service piping, and water-service piping; underground electrical services; and other utilities.
2. Furnish location data for work related to Project that must be performed by public utilities serving Project site.

B. Examination and Acceptance of Conditions: Before proceeding with each component of the Work, examine substrates, areas, and conditions, with Installer or Applicator present where indicated, for compliance with requirements for installation tolerances and other conditions affecting performance. Record observations.

1. Examine roughing-in for mechanical and electrical systems to verify actual locations of connections before equipment and fixture installation.
2. Examine walls, floors, and roofs for suitable conditions where products and systems are to be installed.
3. Verify compatibility with and suitability of substrates, including compatibility with existing finishes or primers.

C. Written Report: Where a written report listing conditions detrimental to performance of the Work is required by other Sections, include the following:

1. Description of the Work, including Specification Section number and paragraph, and Drawing sheet number and detail, where applicable.
2. List of detrimental conditions, including substrates.

3. List of unacceptable installation tolerances.
4. Recommended corrections.

D. Proceed with installation only after unsatisfactory conditions have been corrected. Proceeding with the Work indicates acceptance of surfaces and conditions.

3.2 PREPARATION

A. Existing Utility Information: Furnish information to Owner that is necessary to adjust, move, or relocate existing utility structures, utility poles, lines, services, or other utility appurtenances located in or affected by construction. Coordinate with authorities having jurisdiction.

B. Field Measurements: Take field measurements as required to fit the Work properly. Recheck measurements before installing each product. Where portions of the Work are indicated to fit to other construction, verify dimensions of other construction by field measurements before fabrication. Coordinate fabrication schedule with construction progress to avoid delaying the Work.

C. Space Requirements: Verify space requirements and dimensions of items shown diagrammatically on Drawings.

D. Review of Contract Documents and Field Conditions: Immediately on discovery of the need for clarification of the Contract Documents, submit a request for information to Engineer.

3.3 CONSTRUCTION LAYOUT

A. Verification: Before proceeding to lay out the Work, verify layout information shown on Drawings, in relation to the property survey and existing benchmarks and existing conditions. If discrepancies are discovered, notify Engineer promptly.

3.4 INSTALLATION

A. Locate the Work and components of the Work accurately, in correct alignment and elevation, as indicated.

1. Make vertical work plumb, and make horizontal work level.
2. Where space is limited, install components to maximize space available for maintenance and ease of removal for replacement.
3. Conceal pipes, ducts, and wiring in finished areas unless otherwise indicated.
4. Maintain minimum headroom clearance of 96 inches (2440 mm) in occupied spaces and 90 inches (2300 mm) in unoccupied spaces, unless otherwise indicated on Drawings.

B. Comply with manufacturer's written instructions and recommendations for installing products in applications indicated.

C. Install products at the time and under conditions that will ensure satisfactory results as judged by Engineer. Maintain conditions required for product performance until Substantial Completion.

D. Conduct construction operations, so no part of the Work is subjected to damaging operations or loading in excess of that expected during normal conditions of occupancy of type expected for Project.

E. Sequence the Work and allow adequate clearances to accommodate movement of construction items on-site and placement in permanent locations.

F. Tools and Equipment: Select tools or equipment that minimize production of excessive noise levels.

G. Templates: Obtain and distribute to the parties involved templates for Work specified to be factory prepared and field installed. Check Shop Drawings of other portions of the Work to confirm that adequate provisions are made for locating and installing products to comply with indicated requirements.

H. Attachment: Provide blocking and attachment plates and anchors and fasteners of adequate size and number to securely anchor each component in place, accurately located and aligned with other portions of the Work. Where size and type of attachments are not indicated, verify size and type required for load conditions with manufacturer.

1. Mounting Heights: Where mounting heights are not indicated, mount components at heights directed by Engineer.
2. Allow for building movement, including thermal expansion and contraction.
3. Coordinate installation of anchorages. Furnish setting drawings, templates, and directions for installing anchorages, including sleeves, concrete inserts, anchor bolts, and items with integral anchors, that are to be embedded in concrete or masonry. Deliver such items to Project site in time for installation.

I. Joints: Make joints of uniform width. Where joint locations in exposed Work are not indicated, arrange joints for the best visual effect, as judged by Engineer. Fit exposed connections together to form hairline joints.

3.5 CUTTING AND PATCHING

A. General: Employ skilled workers to perform cutting and patching. Proceed with cutting and patching at the earliest feasible time, and complete without delay.

1. Cut in-place construction to provide for installation of other components or performance of other construction, and subsequently patch as required to restore surfaces to their original condition.

B. Existing Warranties: Remove, replace, patch, and repair materials and surfaces cut or damaged during installation or cutting and patching operations, by methods and with materials so as not to void existing warranties.

C. Temporary Support: Provide temporary support of Work to be cut.

D. Protection: Protect in-place construction during cutting and patching to prevent damage. Provide protection from adverse weather conditions for portions of Project that might be exposed during cutting and patching operations.

E. Adjacent Occupied Areas: Where interference with use of adjoining areas or interruption of free passage to adjoining areas is unavoidable, coordinate cutting and patching in accordance with requirements in Section 011000 "Summary."

F. Existing Utility Services and Mechanical/Electrical Systems: Where existing services/systems are required to be removed, relocated, or abandoned, bypass such services/systems before cutting to prevent interruption to occupied areas.

G. Cutting: Cut in-place construction by sawing, drilling, breaking, chipping, grinding, and similar operations, including excavation, using methods least likely to damage elements retained or adjoining construction. If possible, review proposed procedures with original Installer; comply with original Installer's written recommendations.

1. In general, use hand or small power tools designed for sawing and grinding, not hammering and chopping. Cut holes and slots neatly to minimum size required, and with minimum disturbance of adjacent surfaces. Temporarily cover openings when not in use.
2. Finished Surfaces: Cut or drill from the exposed or finished side into concealed surfaces.
3. Excavating and Backfilling: Comply with requirements in applicable Sections where required by cutting and patching operations.
4. Mechanical and Electrical Services: Cut off pipe or conduit in walls or partitions to be removed. Cap, valve, or plug and seal remaining portion of pipe or conduit to prevent entrance of moisture or other foreign matter after cutting.
5. Proceed with patching after construction operations requiring cutting are complete.

H. Patching: Patch construction by filling, repairing, refinishing, closing up, and similar operations following performance of other Work. Patch with durable seams that are as invisible as practicable, as judged by Engineer. Provide materials and comply with installation requirements specified in other Sections, where applicable.

1. Inspection: Where feasible, test and inspect patched areas after completion to demonstrate physical integrity of installation.
2. Exposed Finishes: Restore exposed finishes of patched areas and extend finish restoration into retained adjoining construction in a manner that will eliminate evidence of patching and refinishing.

    a. Clean piping, conduit, and similar features before applying paint or other finishing materials.
    b. Restore damaged pipe covering to its original condition.

3. Floors and Walls: Where walls or partitions that are removed extend one finished area into another, patch and repair floor and wall surfaces in the new space. Provide an even surface of uniform finish, color, texture, and appearance. Remove in-place floor and wall coverings and replace with new materials, if necessary, to achieve uniform color and appearance.

    a. Where patching occurs in a painted surface, prepare substrate and apply primer and intermediate paint coats appropriate for substrate over the patch, and apply final paint coat over entire unbroken surface containing the patch, corner to corner of wall and edge to edge of ceiling. Provide additional coats until patch blends with adjacent surfaces.

4. Ceilings: Patch, repair, or rehang in-place ceilings as necessary to provide an even-plane surface of uniform appearance.
5. Exterior Building Enclosure: Patch components in a manner that restores enclosure to a weathertight condition and ensures thermal and moisture integrity of building enclosure.

I. Cleaning: Clean areas and spaces where cutting and patching are performed. Remove paint, mortar, oils, putty, and similar materials from adjacent finished surfaces.

3.6 PROGRESS CLEANING

A. Clean Project site and work areas daily, including common areas. Enforce requirements strictly. Dispose of materials lawfully.

1. Comply with requirements in NFPA 241 for removal of combustible waste materials and debris.
2. Do not hold waste materials more than seven days during normal weather or three days if the temperature is expected to rise above 80 deg F (27 deg C).
3. Containerize hazardous and unsanitary waste materials separately from other waste. Mark containers appropriately and dispose of legally, in accordance with regulations.

    a. Use containers intended for holding waste materials of type to be stored.

4. Coordinate progress cleaning for joint-use areas where Contractor and other contractors are working concurrently.

B. Site: Maintain Project site free of waste materials and debris.

C. Work Areas: Clean areas where Work is in progress to the level of cleanliness necessary for proper execution of the Work.

1. Remove liquid spills promptly.
2. Where dust would impair proper execution of the Work, broom-clean or vacuum the entire work area, as appropriate.

D. Installed Work: Keep installed work clean. Clean installed surfaces in accordance with written instructions of manufacturer or fabricator of product installed, using only cleaning materials specifically recommended. If specific cleaning materials are not recommended, use cleaning materials that are not hazardous to health or property and that will not damage exposed surfaces.

E. Concealed Spaces: Remove debris from concealed spaces before enclosing the space.

F. Exposed Surfaces: Clean exposed surfaces and protect as necessary to ensure freedom from damage and deterioration at time of Substantial Completion.

G. Waste Disposal: Do not bury or burn waste materials on-site. Do not wash waste materials down sewers or into waterways. Comply with waste disposal requirements in Section 017419 "Construction Waste Management and Disposal."

H. During handling and installation, clean and protect construction in progress and adjoining materials already in place. Apply protective covering where required to ensure protection from damage or deterioration at Substantial Completion.

I. Clean and provide maintenance on completed construction as frequently as necessary through the remainder of the construction period. Adjust and lubricate operable components to ensure operability without damaging effects.

J. Limiting Exposures: Supervise construction operations to ensure that no part of the construction, completed or in progress, is subject to harmful, dangerous, damaging, or otherwise deleterious exposure during the construction period.

3.7 STARTING AND ADJUSTING

A. Start equipment and operating components to confirm proper operation. Remove malfunctioning units, replace with new units, and retest.

B. Adjust equipment for proper operation. Adjust operating components for proper operation without binding.

C. Test each piece of equipment to verify proper operation. Test and adjust controls and safeties. Replace damaged and malfunctioning controls and equipment.

D. Manufacturer's Field Service: Comply with qualification requirements in Section 014000 "Quality Requirements."

3.8 PROTECTION OF INSTALLED CONSTRUCTION

A. Provide final protection and maintain conditions that ensure installed Work is without damage or deterioration at time of Substantial Completion.

B. Protection of Existing Items: Provide protection and ensure that existing items to remain undisturbed by construction are maintained in condition that existed at commencement of the Work.

C. Comply with manufacturer's written instructions for temperature and relative humidity.

3.9 CORRECTION OF THE WORK

A. Repair or remove and replace damaged, defective, or nonconforming Work. Restore damaged substrates and finishes.

1. Repairing includes replacing defective parts, refinishing damaged surfaces, touching up with matching materials, and properly adjusting operating equipment.

B. Repair Work previously completed and subsequently damaged during construction period. Repair to like-new condition.

C. Restore permanent facilities used during construction to their specified condition.

D. Remove and replace damaged surfaces that are exposed to view if surfaces cannot be repaired without visible evidence of repair.

E. Repair components that do not operate properly. Remove and replace operating components that cannot be repaired.

F. Remove and replace chipped, scratched, and broken glass or reflective surfaces.

END OF SECTION 017300

SECTION 017419 - CONSTRUCTION WASTE MANAGEMENT AND DISPOSAL

PART 1 - GENERAL

1.1 SUMMARY

A. Section includes administrative and procedural requirements for the following:

1. Salvaging nonhazardous demolition and construction waste.
2. Recycling nonhazardous demolition and construction waste.
3. Disposing of nonhazardous demolition and construction waste.

1.2 DEFINITIONS

A. Construction Waste: Building, structure, and site improvement materials and other solid waste resulting from construction, remodeling, renovation, or repair operations. Construction waste includes packaging.

B. Demolition Waste: Building, structure, and site improvement materials resulting from demolition operations.

C. Disposal: Removal of demolition or construction waste and subsequent salvage, sale, recycling, or deposit in landfill, incinerator acceptable to authorities having jurisdiction, or designated spoil areas on Owner’s property.

D. Recycle: Recovery of demolition or construction waste for subsequent processing in preparation for reuse.

E. Salvage: Recovery of demolition or construction waste and subsequent sale or reuse in another facility.

F. Salvage and Reuse: Recovery of demolition or construction waste and subsequent incorporation into the Work.

1.3 MATERIALS OWNERSHIP

A. Unless otherwise indicated, demolition and construction waste becomes property of Contractor.

B. Historic items, relics, antiques, and similar objects including, but not limited to, cornerstones and their contents, commemorative plaques and tablets, and other items of interest or value to Owner that may be uncovered during demolition remain the property of Owner.

1. Carefully salvage in a manner to prevent damage and promptly return to Owner.

1.4 ACTION SUBMITTALS

A. Waste Management Plan: Submit plan within 30 days of date established for commencement of the Work.

1.5 INFORMATIONAL SUBMITTALS

A. Waste Reduction Progress Reports: Concurrent with each Application for Payment, submit report. Use Form CWM-7 for construction waste and Form CWM-8 for demolition waste. Include the following information:

1. Material category.
2. Generation point of waste.
3. Total quantity of waste in tons (tonnes).
4. Quantity of waste salvaged, both estimated and actual in tons (tonnes).
5. Quantity of waste recycled, both estimated and actual in tons (tonnes).
6. Total quantity of waste recovered (salvaged plus recycled) in tons (tonnes).
7. Total quantity of waste recovered (salvaged plus recycled) as a percentage of total waste.

B. Waste Reduction Calculations: Before request for Substantial Completion, submit calculated end-of-Project rates for salvage, recycling, and disposal as a percentage of total waste generated by the Work.

C. Records of Donations: Indicate receipt and acceptance of salvageable waste donated to individuals and organizations. Indicate whether organization is tax exempt.

D. Records of Sales: Indicate receipt and acceptance of salvageable waste sold to individuals and organizations. Indicate whether organization is tax exempt.

E. Recycling and Processing Facility Records: Indicate receipt and acceptance of recyclable waste by recycling and processing facilities licensed to accept them. Include manifests, weight tickets, receipts, and invoices.

F. Landfill and Incinerator Disposal Records: Indicate receipt and acceptance of waste by landfills and incinerator facilities licensed to accept them. Include manifests, weight tickets, receipts, and invoices.

G. Qualification Data: For waste management coordinator and refrigerant recovery technician.

H. Statement of Refrigerant Recovery: Signed by refrigerant recovery technician responsible for recovering refrigerant, stating that all refrigerant that was present was recovered and that recovery was performed according to EPA regulations. Include name and address of technician and date refrigerant was recovered.

I. Refrigerant Recovery: Comply with requirements in Section 024119 "Selective Demolition" for refrigerant recovery submittals.

1.6 QUALITY ASSURANCE

A. Waste Management Coordinator Qualifications: Experienced firm, or individual employed and assigned by General Contractor, with a record of successful waste management coordination of projects with similar requirements. Superintendent may not serve as Waste Management Coordinator.

B. Refrigerant Recovery Technician Qualifications: Universal certified by EPA-approved certification program.

C. Refrigerant Recovery Technician Qualifications: Comply with requirements in Section 024119 "Selective Demolition."

D. Regulatory Requirements: Comply with transportation and disposal regulations of authorities having jurisdiction.

1.7 WASTE MANAGEMENT PLAN

A. General: Develop a waste management plan according to requirements in this Section. Plan shall consist of waste identification, waste reduction work plan, and cost/revenue analysis. Distinguish between demolition and construction waste. Indicate quantities by weight or volume, but use same units of measure throughout waste management plan.

B. Waste Identification: Indicate anticipated types and quantities of demolition and construction waste generated by the Work. Use Form CWM-1 for construction waste and Form CWM-2 for demolition waste Include estimated quantities and assumptions for estimates.

C. Waste Reduction Work Plan: List each type of waste and whether it will be salvaged, recycled, or disposed of in landfill or incinerator. Use Form CWM-3 for construction waste and Form CWM-4 for demolition waste. Include points of waste generation, total quantity of each type of waste, quantity for each means of recovery, and handling and transportation procedures.

1. Salvaged Materials for Reuse: For materials that will be salvaged and reused in this Project, describe methods for preparing salvaged materials before incorporation into the Work in compliance with Section 024119 "Selective Demolition."
2. Salvaged Materials for Sale: For materials that will be sold to individuals and organizations, include list of their names, addresses, and telephone numbers.
3. Salvaged Materials for Donation: For materials that will be donated to individuals and organizations, include list of their names, addresses, and telephone numbers.
4. Recycled Materials: Include list of local receivers and processors and type of recycled materials each will accept. Include names, addresses, and telephone numbers.
5. Disposed Materials: Indicate how and where materials will be disposed of. Include name, address, and telephone number of each landfill and incinerator facility.
6. Handling and Transportation Procedures: Include method that will be used for separating recyclable waste including sizes of containers, container labeling, and designated location where materials separation will be performed.

D. Cost/Revenue Analysis: Indicate total cost of waste disposal as if there were no waste management plan and net additional cost or net savings resulting from implementing waste

management plan. Use Form CWM-5 for construction waste and Form CWM-6 for demolition waste. Include the following:

1. Total quantity of waste.
2. Estimated cost of disposal (cost per unit). Include transportation and tipping fees and cost of collection containers and handling for each type of waste.
3. Total cost of disposal (with no waste management).
4. Revenue from salvaged materials.
5. Revenue from recycled materials.
6. Savings in transportation and tipping fees by donating materials.
7. Savings in transportation and tipping fees that are avoided.
8. Handling and transportation costs. Include cost of collection containers for each type of waste.
9. Net additional cost or net savings from waste management plan.

PART 2 - PRODUCTS

2.1 PERFORMANCE REQUIREMENTS

A. General: Achieve end-of-Project rates for salvage/recycling of 50 percent by weight of total nonhazardous solid waste generated by the Work. Practice efficient waste management in the use of materials in the course of the Work. Use all reasonable means to divert construction and demolition waste from landfills and incinerators. Facilitate recycling and salvage of materials, including the following:

1. Demolition Waste:
    a. Concrete.
    b. Concrete reinforcing steel.
    c. Brick.
    d. Concrete masonry units.
    e. Wood studs.
    f. Wood joists.
    g. Plywood and oriented strand board.
    h. Wood paneling.
    i. Wood trim.
    j. Miscellaneous steel.
    k. Rough hardware.
    l. Roofing.
    m. Insulation.
    n. Metal studs.
    o. Gypsum board.
    p. Acoustical tile and panels.
    q. Equipment.
    r. Plumbing fixtures.
    s. Piping.
    t. Supports and hangers.
    u. Valves.
    v. Mechanical equipment.
    w. Refrigerants.

x. Electrical conduit.
y. Copper wiring.
z. Electrical devices.

2. Construction Waste:

a. Masonry and CMU.
b. Lumber.
c. Wood sheet materials.
d. Wood trim.
e. Metals.
f. Insulation.
g. Gypsum board.
h. Piping.
i. Electrical conduit.
j. Packaging: Regardless of salvage/recycle goal indicated in "General" Paragraph above, salvage or recycle 100 percent of the following uncontaminated packaging materials:

1) Paper.
2) Cardboard.
3) Boxes.
4) Plastic sheet and film.
5) Polystyrene packaging.
6) Wood crates.
7) Wood pallets.
8) Plastic pails.

k. Construction Office Waste: Regardless of salvage/recycle goal indicated in "General" Paragraph above, salvage or recycle 100 percent of the following construction office waste materials:

1) Paper.
2) Aluminum cans.
3) Glass containers.

PART 3 - EXECUTION

3.1 PLAN IMPLEMENTATION

A. General: Implement approved waste management plan. Provide handling, containers, storage, signage, transportation, and other items as required to implement waste management plan during the entire duration of the Contract.

B. Waste Management Coordinator: Engage a waste management coordinator to be responsible for implementing, monitoring, and reporting status of waste management work plan. Coordinator shall be present at Project site full time for duration of Project.

C. Training: Train workers, subcontractors, and suppliers on proper waste management procedures, as appropriate for the Work.

1. Distribute waste management plan to everyone concerned within three days of submittal return.
2. Distribute waste management plan to entities when they first begin work on-site. Review plan procedures and locations established for salvage, recycling, and disposal.

D. Site Access and Temporary Controls: Conduct waste management operations to ensure minimum interference with roads, streets, walks, walkways, and other adjacent occupied and used facilities.

1. Designate and label specific areas on Project site necessary for separating materials that are to be salvaged and recycled.

3.2 SALVAGING DEMOLITION WASTE

A. Comply with requirements in Section 024119 "Selective Demolition" for salvaging demolition waste.

B. Salvaged Items for Reuse in the Work: Salvage items for reuse and handle as follows:

1. Clean salvaged items.
2. Pack or crate items after cleaning. Identify contents of containers with label indicating elements, date of removal, quantity, and location where removed.
3. Store items in a secure area until installation.
4. Protect items from damage during transport and storage.
5. Install salvaged items to comply with installation requirements for new materials and equipment. Provide connections, supports, and miscellaneous materials necessary to make items functional for use indicated.

C. Salvaged Items for Sale and Donation: Permitted on Project site.

D. Salvaged Items for Owner's Use: Salvage items for Owner's use and handle as follows:

1. Clean salvaged items.
2. Pack or crate items after cleaning. Identify contents of containers with label indicating elements, date of removal, quantity, and location where removed.
3. Store items in a secure area until delivery to Owner.
4. Transport items to Owner's storage area designated by Owner.
5. Protect items from damage during transport and storage.

E. Doors and Hardware: Brace open end of door frames. Except for removing door closers, leave door hardware attached to doors.

F. Equipment: Drain tanks, piping, and fixtures. Seal openings with caps or plugs. Protect equipment from exposure to weather.

G. Plumbing Fixtures: Separate by type and size.

H. Lighting Fixtures: Separate lamps by type and protect from breakage.

I. Electrical Devices: Separate switches, receptacles, switchgear, transformers, meters, panelboards, circuit breakers, and other devices by type.

3.3 RECYCLING DEMOLITION AND CONSTRUCTION WASTE, GENERAL

A. General: Recycle paper and beverage containers used by on-site workers.

B. Recycling Incentives: Revenues, savings, rebates, tax credits, and other incentives received for recycling waste materials shall accrue to Contractor.

C. Preparation of Waste: Prepare and maintain recyclable waste materials according to recycling or reuse facility requirements. Maintain materials free of dirt, adhesives, solvents, petroleum contamination, and other substances deleterious to the recycling process.

D. Procedures: Separate recyclable waste from other waste materials, trash, and debris. Separate recyclable waste by type at Project site to the maximum extent practical according to approved construction waste management plan.

1. Provide appropriately marked containers or bins for controlling recyclable waste until removed from Project site. Include list of acceptable and unacceptable materials at each container and bin.

    a. Inspect containers and bins for contamination and remove contaminated materials if found.

2. Stockpile processed materials on-site without intermixing with other materials. Place, grade, and shape stockpiles to drain surface water. Cover to prevent windblown dust.
3. Stockpile materials away from construction area. Do not store within drip line of remaining trees.
4. Store components off the ground and protect from the weather.
5. Remove recyclable waste from Owner's property and transport to recycling receiver or processor as often as required to prevent overfilling bins.

3.4 RECYCLING DEMOLITION WASTE

A. Concrete: Remove reinforcement and other metals from concrete and sort with other metals.

1. Pulverize concrete to maximum 4-inch (100-mm) size.

B. Masonry: Remove metal reinforcement, anchors, and ties from masonry and sort with other metals.

1. Pulverize masonry to maximum 4-inch (100-mm) size.

2. Clean and stack undamaged, whole masonry units on wood pallets.

C. Wood Materials: Sort and stack members according to size, type, and length. Separate lumber, engineered wood products, panel products, and treated wood materials.

D. Metals: Separate metals by type.

1. Structural Steel: Stack members according to size, type of member, and length.
2. Remove and dispose of bolts, nuts, washers, and other rough hardware.

E. Asphalt Shingle Roofing: Separate organic and glass-fiber asphalt shingles and felts. Remove and dispose of nails, staples, and accessories.

F. Gypsum Board: Stack large clean pieces on wood pallets or in container and store in a dry location. Remove edge trim and sort with other metals. Remove and dispose of fasteners.

G. Acoustical Ceiling Panels and Tile: Stack large clean pieces on wood pallets and store in a dry location.

H. Metal Suspension System: Separate metal members, including trim and other metals from acoustical panels and tile, and sort with other metals.

I. Piping: Reduce piping to straight lengths and store by material and size. Separate supports, hangers, valves, sprinklers, and other components by material and size.

J. Conduit: Reduce conduit to straight lengths and store by material and size.

K. Lamps: Separate lamps by type and store according to requirements in 40 CFR 273.

3.5 RECYCLING CONSTRUCTION WASTE

A. Packaging:

1. Cardboard and Boxes: Break down packaging into flat sheets. Bundle and store in a dry location.
2. Polystyrene Packaging: Separate and bag materials.
3. Pallets: As much as possible, require deliveries using pallets to remove pallets from Project site. For pallets that remain on-site, break down pallets into component wood pieces and comply with requirements for recycling wood.
4. Crates: Break down crates into component wood pieces and comply with requirements for recycling wood.

3.6 DISPOSAL OF WASTE

A. General: Except for items or materials to be salvaged or recycled, remove waste materials from Project site and legally dispose of them in a landfill or incinerator acceptable to authorities having jurisdiction.

1. Except as otherwise specified, do not allow waste materials that are to be disposed of accumulate on-site.

2. Remove and transport debris in a manner that will prevent spillage on adjacent surfaces and areas.

END OF SECTION 017419

SECTION 017700 - CLOSEOUT PROCEDURES

PART 1 - GENERAL

1.1 SUMMARY

A. Section includes administrative and procedural requirements for Contract closeout, including, but not limited to, the following:

1. Substantial Completion procedures.
2. Final Completion procedures.
3. List of incomplete items.
4. Submittal of Project warranties.
5. Final cleaning.

B. Related Requirements:

1. Section 012900 "Payment Procedures" for requirements for Applications for Payment for Substantial Completion and Final Completion.
2. Section 017823 "Operation and Maintenance Data" for additional operation and maintenance manual requirements.
3. Section 017839 "Project Record Documents" for submitting Record Drawings, Record Specifications, and Record Product Data.
4. Section 017900 "Demonstration and Training" for requirements to train Owner's maintenance personnel to adjust, operate, and maintain products, equipment, and systems.

1.2 DEFINITIONS

A. List of Incomplete Items: Contractor-prepared list of items to be completed or corrected, prepared for the Engineer's use prior to Engineer's inspection, to determine if the Work is substantially complete.

1.3 ACTION SUBMITTALS

A. Product Data: For each type of cleaning agent.

B. Contractor's List of Incomplete Items: Initial submittal at Substantial Completion.

C. Certified List of Incomplete Items: Final submittal at Final Completion.

1.4 CLOSEOUT SUBMITTALS

A. Certificates of Release: From authorities having jurisdiction.

B. Certificate of Insurance: For continuing coverage.

C. Field Report: For pest-control inspection.

1.5 MAINTENANCE MATERIAL SUBMITTALS

A. Schedule of Maintenance Material Items: For maintenance material submittal items required by other Sections.

1.6 SUBSTANTIAL COMPLETION PROCEDURES

A. Contractor's List of Incomplete Items: Prepare and submit a list of items to be completed and corrected (Contractor's "punch list"), indicating the value of each item on the list and reasons why the Work is incomplete.

B. Submittals Prior to Substantial Completion: Complete the following a minimum of 10 days prior to requesting inspection for determining date of Substantial Completion. List items below that are incomplete at time of request.

1. Certificates of Release: Obtain and submit releases from authorities having jurisdiction, permitting Owner unrestricted use of the Work and access to services and utilities. Include occupancy permits, operating certificates, and similar releases.
2. Submit closeout submittals specified in other Division 01 Sections, including Project Record Documents, operation and maintenance manuals, damage or settlement surveys, property surveys, and similar final record information.
3. Submit closeout submittals specified in individual Sections, including specific warranties, workmanship bonds, maintenance service agreements, final certifications, and similar documents.
4. Submit maintenance material submittals specified in individual Sections, including tools, spare parts, extra materials, and similar items, and deliver to location designated by Engineer. Label with manufacturer's name and model number.

    a. Schedule of Maintenance Material Items: Prepare and submit schedule of maintenance material submittal items, including name and quantity of each item and name and number of related Specification Section. Obtain Owner's signature for receipt of submittals.

5. Submit testing, adjusting, and balancing records.
6. Submit sustainable design submittals not previously submitted.
7. Submit changeover information related to Owner's occupancy, use, operation, and maintenance.

C. Procedures Prior to Substantial Completion: Complete the following a minimum of 10 days prior to requesting inspection for determining date of Substantial Completion. List items below that are incomplete at time of request.

1. Advise Owner of pending insurance changeover requirements.
2. Make final changeover of permanent locks and deliver keys to Owner. Advise Owner's personnel of changeover in security provisions.
3. Complete startup and testing of systems and equipment.
4. Perform preventive maintenance on equipment used prior to Substantial Completion.

5. Instruct Owner's personnel in operation, adjustment, and maintenance of products, equipment, and systems. Submit demonstration and training video recordings specified in Section 017900 "Demonstration and Training."
6. Advise Owner of changeover in utility services.
7. Participate with Owner in conducting inspection and walkthrough with local emergency responders.
8. Terminate and remove temporary facilities from Project site, along with mockups, construction tools, and similar elements.
9. Complete final cleaning requirements.
10. Touch up paint and otherwise repair and restore marred exposed finishes to eliminate visual defects.

D. Inspection: Submit a written request for inspection to determine Substantial Completion a minimum of 10 days prior to date the Work will be completed and ready for final inspection and tests. On receipt of request, Engineer will either proceed with inspection or notify Contractor of unfulfilled requirements. Engineer will prepare the Certificate of Substantial Completion after inspection or will notify Contractor of items, either on Contractor's list or additional items identified by Engineer, that must be completed or corrected before certificate will be issued.

1. Request reinspection when the Work identified in previous inspections as incomplete is completed or corrected.
2. Results of completed inspection will form the basis of requirements for Final Completion.

1.7 FINAL COMPLETION PROCEDURES

A. Submittals Prior to Final Completion: Before requesting final inspection for determining Final Completion, complete the following:

1. Submit a final Application for Payment in accordance with Section 012900 "Payment Procedures."
2. Certified List of Incomplete Items: Submit certified copy of Engineer's Substantial Completion inspection list of items to be completed or corrected (punch list), endorsed and dated by Engineer. Certified copy of the list will state that each item has been completed or otherwise resolved for acceptance.
3. Certificate of Insurance: Submit evidence of final, continuing insurance coverage complying with insurance requirements.
4. Submit pest-control final inspection report.
5. Submit Final Completion photographic documentation.

B. Inspection: Submit a written request for final inspection to determine acceptance a minimum of 10 days prior to date the Work will be completed and ready for final inspection and tests. On receipt of request, Engineer will either proceed with inspection or notify Contractor of unfulfilled requirements. Engineer will prepare a final Certificate for Payment after inspection or will notify Contractor of construction that must be completed or corrected before certificate will be issued.

1. Request reinspection when the Work identified in previous inspections as incomplete is completed or corrected.

1.8 LIST OF INCOMPLETE ITEMS

A. Organization of List: Include name and identification of each space and area affected by construction operations for incomplete items and items needing correction including, if necessary, areas disturbed by Contractor that are outside the limits of construction.

1. Organize list of spaces in sequential order, listed by room or space number.
2. Organize items applying to each space by major element, including categories for ceilings, individual walls, floors, equipment, and building systems.
3. Include the following information at the top of each page:

a. Project name.
b. Date.
c. Name of Engineer.
d. Name of Contractor.
e. Page number.

4. Submit list of incomplete items in the following format:

a. MS Excel Electronic File: Engineer will return annotated file.
b. PDF Electronic File: Engineer will return annotated file.

1.9 SUBMITTAL OF PROJECT WARRANTIES

A. Time of Submittal: Submit written warranties on request of Engineer for designated portions of the Work where warranties are indicated to commence on dates other than date of Substantial Completion, or when delay in submittal of warranties might limit Owner's rights under warranty.

B. Partial Occupancy: Submit properly executed warranties within 15 days of completion of designated portions of the Work that are completed and occupied or used by Owner during construction period by separate agreement with Contractor.

C. Organize warranty documents into an orderly sequence based on the table of contents of Project Manual.

D. Warranty Electronic File: Provide warranties and bonds in PDF format. Assemble complete warranty and bond submittal package into a single electronic PDF file with bookmarks enabling navigation to each item. Provide bookmarked table of contents at beginning of document.

E. Provide additional copies of each warranty to include in operation and maintenance manuals.

PART 2 - PRODUCTS

2.1 MATERIALS

A. Cleaning Agents: Use cleaning materials and agents recommended by manufacturer or fabricator of the surface to be cleaned. Do not use cleaning agents that are potentially hazardous to health or property or that might damage finished surfaces.

1. Use cleaning products that comply with Green Seal's GS-37, or if GS-37 is not applicable, use products that comply with the California Code of Regulations maximum allowable VOC levels.

PART 3 - EXECUTION

3.1 FINAL CLEANING

A. General: Perform final cleaning. Conduct cleaning and waste-removal operations to comply with local laws and ordinances and Federal and local environmental and antipollution regulations.

B. Cleaning: Employ experienced workers or professional cleaners for final cleaning. Clean each surface or unit to condition expected in an average commercial building cleaning and maintenance program. Comply with manufacturer's written instructions.

1. Complete the following cleaning operations before requesting inspection for certification of Substantial Completion for entire Project or for a designated portion of Project:

a. Clean Project site of rubbish, waste material, litter, and other foreign substances.
b. Sweep paved areas broom clean. Remove petrochemical spills, stains, and other foreign deposits.
c. Rake grounds that are not planted, mulched, or paved to a smooth, even-textured surface.
d. Remove tools, construction equipment, machinery, and surplus material from Project site.
e. Remove snow and ice to provide safe access to building.
f. Clean exposed exterior and interior hard-surfaced finishes to a dirt-free condition, free of stains, films, and similar foreign substances. Avoid disturbing natural weathering of exterior surfaces. Restore reflective surfaces to their original condition.
g. Remove debris and surface dust from limited-access spaces, including roofs, plenums, shafts, trenches, equipment vaults, manholes, attics, and similar spaces.
h. Clean flooring, removing debris, dirt, and staining; clean in accordance with manufacturer's instructions.
i. Vacuum and mop concrete.
j. Vacuum carpet and similar soft surfaces, removing debris and excess nap; clean in accordance with manufacturer's instructions if visible soil or stains remain.

k. Clean transparent materials, including mirrors and glass in doors and windows. Remove glazing compounds and other noticeable, vision-obscuring materials. Polish mirrors and glass, taking care not to scratch surfaces.
l. Remove labels that are not permanent.
m. Wipe surfaces of mechanical and electrical equipment and similar equipment. Remove excess lubrication, paint and mortar droppings, and other foreign substances.
n. Clean plumbing fixtures to a sanitary condition, free of stains, including stains resulting from water exposure.
o. Replace disposable air filters and clean permanent air filters. Clean exposed surfaces of diffusers, registers, and grills.
p. Clean ducts, blowers, and coils.

1) Clean HVAC system in compliance with NADCA ACR. Provide written report on completion of cleaning.

q. Clean luminaires, lamps, globes, and reflectors to function with full efficiency.
r. Clean strainers.
s. Leave Project clean and ready for occupancy.

C. Pest Control: Comply with pest control requirements in Section 015000 "Temporary Facilities and Controls." Prepare written report.

D. Construction Waste Disposal: Comply with waste-disposal requirements in Section 017419 "Construction Waste Management and Disposal."

3.2 CORRECTION OF THE WORK

A. Complete repair and restoration operations required by "Correction of the Work" Article in Section 017300 "Execution" before requesting inspection for determination of Substantial Completion.

END OF SECTION 017700

SECTION 017823 - OPERATION AND MAINTENANCE DATA

PART 1 - GENERAL

1.1 SUMMARY

A. Section includes administrative and procedural requirements for preparing operation and maintenance manuals, including the following:

1. Operation and maintenance documentation directory manuals.
2. Emergency manuals.
3. Systems and equipment operation manuals.
4. Systems and equipment maintenance manuals.
5. Product maintenance manuals.

B. Related Requirements:

1. Section 013300 "Submittal Procedures" for submitting copies of submittals for operation and maintenance manuals.

1.2 DEFINITIONS

A. System: An organized collection of parts, equipment, or subsystems united by regular interaction.

B. Subsystem: A portion of a system with characteristics similar to a system.

1.3 CLOSEOUT SUBMITTALS

A. Submit operation and maintenance manuals indicated. Provide content for each manual as specified in individual Specification Sections, and as reviewed and approved at the time of Section submittals. Submit reviewed manual content formatted and organized as required by this Section.

1. Engineer will comment on whether content of operation and maintenance submittals is acceptable.
2. Where applicable, clarify and update reviewed manual content to correspond to revisions and field conditions.

B. Format: Submit operation and maintenance manuals in the following format:

1. Submit by email to Engineer of Record. Enable reviewer comments on draft submittals.

C. Final Manual Submittal: Submit each manual in final form prior to requesting inspection for Substantial Completion and at least 15 days before commencing demonstration and training. Engineer will return copy with comments.

1. Correct or revise each manual to comply with Engineer's comments. Submit copies of each corrected manual within 15 days of receipt of Engineer's comments and prior to commencing demonstration and training.

D. Comply with Section 017700 "Closeout Procedures" for schedule for submitting operation and maintenance documentation.

1.4 FORMAT OF OPERATION AND MAINTENANCE MANUALS

A. Manuals, Electronic Files: Submit manuals in the form of a multiple file composite electronic PDF file for each manual type required.

1. Electronic Files: Use electronic files prepared by manufacturer where available. Where scanning of paper documents is required, configure scanned file for minimum readable file size.
2. File Names and Bookmarks: Bookmark individual documents based on file names. Name document files to correspond to system, subsystem, and equipment names used in manual directory and table of contents. Group documents for each system and subsystem into individual composite bookmarked files, then create composite manual, so that resulting bookmarks reflect the system, subsystem, and equipment names in a readily navigated file tree. Configure electronic manual to display bookmark panel on opening file.

B. Manuals, Paper Copy: Submit manuals in the form of hard-copy, bound and labeled volumes.

1. Binders: Heavy-duty, three-ring, vinyl-covered, post-type binders, in thickness necessary to accommodate contents, sized to hold 8-1/2-by-11-inch (215-by-280-mm) paper; with clear plastic sleeve on spine to hold label describing contents and with pockets inside covers to hold folded oversize sheets.

    a. If two or more binders are necessary to accommodate data of a system, organize data in each binder into groupings by subsystem and related components. Cross-reference other binders if necessary to provide essential information for proper operation or maintenance of equipment or system.
    b. Identify each binder on front and spine, with printed title "OPERATION AND MAINTENANCE MANUAL," Project title or name, and subject matter of contents. Indicate volume number for multiple-volume sets.

2. Dividers: Heavy-paper dividers with plastic-covered tabs for each section of the manual. Mark each tab to indicate contents. Include typed list of products and major components of equipment included in the section on each divider, cross-referenced to Specification Section number and title of Project Manual.
3. Protective Plastic Sleeves: Transparent plastic sleeves designed to enclose diagnostic software storage media for computerized electronic equipment. Enclose title pages and directories in clear plastic sleeves.
4. Drawings: Attach reinforced, punched binder tabs on drawings and bind with text.

    a. If oversize drawings are necessary, fold drawings to same size as text pages and use as foldouts.
    b. If drawings are too large to be used as foldouts, fold and place drawings in labeled envelopes and bind envelopes in rear of manual. At appropriate locations in

manual, insert typewritten pages indicating drawing titles, descriptions of contents, and drawing locations.

1.5 REQUIREMENTS FOR EMERGENCY, OPERATION, AND MAINTENANCE MANUALS

A. Organization of Manuals: Unless otherwise indicated, organize each manual into a separate section for each system and subsystem, and a separate section for each piece of equipment not part of a system. Each manual shall contain the following materials, in the order listed:

1. Title page.
2. Table of contents.
3. Manual contents.

B. Title Page: Include the following information:

1. Subject matter included in manual.
2. Name and address of Project.
3. Name and address of Owner.
4. Date of submittal.
5. Name and contact information for Contractor.
6. Name and contact information for Construction Manager.
7. Name and contact information for Engineer.
8. Name and contact information for Commissioning Authority.
9. Names and contact information for major consultants to the Engineer that designed the systems contained in the manuals.
10. Cross-reference to related systems in other operation and maintenance manuals.

C. Table of Contents: List each product included in manual, identified by product name, indexed to the content of the volume, and cross-referenced to Specification Section number in Project Manual.

1. If operation or maintenance documentation requires more than one volume to accommodate data, include comprehensive table of contents for all volumes in each volume of the set.

D. Manual Contents: Organize into sets of manageable size. Arrange contents alphabetically by system, subsystem, and equipment. If possible, assemble instructions for subsystems, equipment, and components of one system into a single binder.

E. Identification: In the documentation directory and in each operation and maintenance manual, identify each system, subsystem, and piece of equipment with same designation used in the Contract Documents. If no designation exists, assign a designation according to ASHRAE Guideline 4, "Preparation of Operating and Maintenance Documentation for Building Systems."

1.6 EMERGENCY MANUALS

A. Emergency Manual: Assemble a complete set of emergency information indicating procedures for use by emergency personnel and by Owner's operating personnel for types of emergencies indicated.

B. Content: Organize manual into a separate section for each of the following:

1. Type of emergency.
2. Emergency instructions.
3. Emergency procedures.

C. Type of Emergency: Where applicable for each type of emergency indicated below, include instructions and procedures for each system, subsystem, piece of equipment, and component:

1. Fire.
2. Flood.
3. Gas leak.
4. Water leak.
5. Power failure.
6. Water outage.
7. System, subsystem, or equipment failure.
8. Chemical release or spill.

D. Emergency Instructions: Describe and explain warnings, trouble indications, error messages, and similar codes and signals. Include responsibilities of Owner's operating personnel for notification of Installer, supplier, and manufacturer to maintain warranties.

E. Emergency Procedures: Include the following, as applicable:

1. Instructions on stopping.
2. Shutdown instructions for each type of emergency.
3. Operating instructions for conditions outside normal operating limits.
4. Required sequences for electric or electronic systems.
5. Special operating instructions and procedures.

1.7 SYSTEMS AND EQUIPMENT OPERATION MANUALS

A. Systems and Equipment Operation Manual: Assemble a complete set of data indicating operation of each system, subsystem, and piece of equipment not part of a system. Include information required for daily operation and management, operating standards, and routine and special operating procedures.

1. Engage a factory-authorized service representative to assemble and prepare information for each system, subsystem, and piece of equipment not part of a system.
2. Prepare a separate manual for each system and subsystem, in the form of an instructional manual for use by Owner's operating personnel.

B. Content: In addition to requirements in this Section, include operation data required in individual Specification Sections and the following information:

1. System, subsystem, and equipment descriptions. Use designations for systems and equipment indicated on Contract Documents.
2. Performance and design criteria if Contractor has delegated design responsibility.
3. Operating standards.
4. Operating procedures.
5. Operating logs.
6. Wiring diagrams.
7. Control diagrams.
8. Piped system diagrams.
9. Precautions against improper use.
10. License requirements including inspection and renewal dates.

C. Descriptions: Include the following:

1. Product name and model number. Use designations for products indicated on Contract Documents.
2. Manufacturer's name.
3. Equipment identification with serial number of each component.
4. Equipment function.
5. Operating characteristics.
6. Limiting conditions.
7. Performance curves.
8. Engineering data and tests.
9. Complete nomenclature and number of replacement parts.

D. Operating Procedures: Include the following, as applicable:

1. Startup procedures.
2. Equipment or system break-in procedures.
3. Routine and normal operating instructions.
4. Regulation and control procedures.
5. Instructions on stopping.
6. Normal shutdown instructions.
7. Seasonal and weekend operating instructions.
8. Required sequences for electric or electronic systems.
9. Special operating instructions and procedures.

E. Systems and Equipment Controls: Describe the sequence of operation, and diagram controls as installed.

F. Piped Systems: Diagram piping as installed and identify color coding where required for identification.

1.8 SYSTEMS AND EQUIPMENT MAINTENANCE MANUALS

A. Systems and Equipment Maintenance Manuals: Assemble a complete set of data indicating maintenance of each system, subsystem, and piece of equipment not part of a system. Include manufacturers' maintenance documentation, preventive maintenance procedures and frequency, repair procedures, wiring and systems diagrams, lists of spare parts, and warranty information.

1. Engage a factory-authorized service representative to assemble and prepare information for each system, subsystem, and piece of equipment not part of a system.
2. Prepare a separate manual for each system and subsystem, in the form of an instructional manual for use by Owner's operating personnel.

B. Content: For each system, subsystem, and piece of equipment not part of a system, include source information, manufacturers' maintenance documentation, maintenance procedures, maintenance and service schedules, spare parts list and source information, maintenance service contracts, and warranties and bonds as described below.

C. Source Information: List each system, subsystem, and piece of equipment included in manual, identified by product name and arranged to match manual's table of contents. For each product, list name, address, and telephone number of Installer or supplier and maintenance service agent, and cross-reference Specification Section number and title in Project Manual and drawing or schedule designation or identifier where applicable.

D. Manufacturers' Maintenance Documentation: Include the following information for each component part or piece of equipment:

1. Standard maintenance instructions and bulletins; include only sheets pertinent to product or component installed. Mark each sheet to identify each product or component incorporated into the Work. If data include more than one item in a tabular format, identify each item using appropriate references from the Contract Documents. Identify data applicable to the Work and delete references to information not applicable.

    a. Prepare supplementary text if manufacturers' standard printed data are not available and where the information is necessary for proper operation and maintenance of equipment or systems.

2. Drawings, diagrams, and instructions required for maintenance, including disassembly and component removal, replacement, and assembly.
3. Identification and nomenclature of parts and components.
4. List of items recommended to be stocked as spare parts.

E. Maintenance Procedures: Include the following information and items that detail essential maintenance procedures:

1. Test and inspection instructions.
2. Troubleshooting guide.
3. Precautions against improper maintenance.
4. Disassembly; component removal, repair, and replacement; and reassembly instructions.
5. Aligning, adjusting, and checking instructions.
6. Demonstration and training video recording, if available.

F. Maintenance and Service Schedules: Include service and lubrication requirements, list of required lubricants for equipment, and separate schedules for preventive and routine maintenance and service with standard time allotment.

1. Scheduled Maintenance and Service: Tabulate actions for daily, weekly, monthly, quarterly, semiannual, and annual frequencies.

2. Maintenance and Service Record: Include manufacturers' forms for recording maintenance.

G. Spare Parts List and Source Information: Include lists of replacement and repair parts, with parts identified and cross-referenced to manufacturers' maintenance documentation and local sources of maintenance materials and related services.

H. Maintenance Service Contracts: Include copies of maintenance agreements with name and telephone number of service agent.

I. Warranties and Bonds: Include copies of warranties and bonds and lists of circumstances and conditions that would affect validity of warranties or bonds.

1. Include procedures to follow and required notifications for warranty claims.

J. Drawings: Prepare drawings supplementing manufacturers' printed data to illustrate the relationship of component parts of equipment and systems and to illustrate control sequence and flow diagrams. Coordinate these drawings with information contained in record Drawings to ensure correct illustration of completed installation.

1. Do not use original project record documents as part of maintenance manuals.

1.9 PRODUCT MAINTENANCE MANUALS

A. Product Maintenance Manual: Assemble a complete set of maintenance data indicating care and maintenance of each product, material, and finish incorporated into the Work.

B. Content: Organize manual into a separate section for each product, material, and finish. Include source information, product information, maintenance procedures, repair materials and sources, and warranties and bonds, as described below.

C. Source Information: List each product included in manual, identified by product name and arranged to match manual's table of contents. For each product, list name, address, and telephone number of Installer or supplier and maintenance service agent, and cross-reference Specification Section number and title in Project Manual and drawing or schedule designation or identifier where applicable.

D. Product Information: Include the following, as applicable:

1. Product name and model number.
2. Manufacturer's name.
3. Color, pattern, and texture.
4. Material and chemical composition.
5. Reordering information for specially manufactured products.

E. Maintenance Procedures: Include manufacturer's written recommendations and the following:

1. Inspection procedures.
2. Types of cleaning agents to be used and methods of cleaning.
3. List of cleaning agents and methods of cleaning detrimental to product.

4. Schedule for routine cleaning and maintenance.
5. Repair instructions.

F. Repair Materials and Sources: Include lists of materials and local sources of materials and related services.

G. Warranties and Bonds: Include copies of warranties and bonds and lists of circumstances and conditions that would affect validity of warranties or bonds.

1. Include procedures to follow and required notifications for warranty claims.

PART 2 - PRODUCTS (Not Used)

PART 3 - EXECUTION (Not Used)

END OF SECTION 017823

SECTION 017839 - PROJECT RECORD DOCUMENTS

1.1 RELATED DOCUMENTS

A. Drawings and general provisions of the Contract, including General and Supplementary Conditions and other Division 01 Specification Sections, apply to this Section.

1.2 SUMMARY

A. Section includes administrative and procedural requirements for Project Record Documents, including the following:

1. Record Drawings.
2. Record specifications.
3. Record Product Data.
4. Miscellaneous record submittals.

B. Related Requirements:

1. Section 017300 "Execution" for final property survey.
2. Section 017700 "Closeout Procedures" for general closeout procedures.
3. Section 017823 "Operation and Maintenance Data" for operation and maintenance manual requirements.

1.3 CLOSEOUT SUBMITTALS

A. Record Drawings: Comply with the following:

1. Number of Copies: Submit one set(s) of marked-up record prints.
2. Number of Copies: Submit copies of Record Drawings as follows:

a. Initial Submittal:
1) Submit PDF electronic files of scanned record prints and one set(s) of file prints.

b. Final Submittal:
1) Submit PDF electronic files of scanned Record Prints and three set(s) of file prints.

B. Record Specifications: Submit annotated PDF electronic files of Project's Specifications, including addenda and Contract modifications.

C. Record Product Data: Submit annotated PDF electronic files and directories of each submittal.

1. Where record Product Data are required as part of operation and maintenance manuals, submit duplicate marked-up Product Data as a component of manual.

1.4 RECORD DRAWINGS

A. Record Prints: Maintain one set of marked-up paper copies of the Contract Drawings and Shop Drawings, incorporating new and revised drawings as modifications are issued.

1. Preparation: Mark record prints to show the actual installation, where installation varies from that shown originally. Require individual or entity who obtained record data, whether individual or entity is Installer, subcontractor, or similar entity, to provide information for preparation of corresponding marked-up record prints.

a. Give particular attention to information on concealed elements that would be difficult to identify or measure and record later.
b. Accurately record information in an acceptable drawing technique.
c. Record data as soon as possible after obtaining it.
d. Record and check the markup before enclosing concealed installations.
e. Cross-reference record prints to corresponding photographic documentation.

2. Content: Types of items requiring marking include, but are not limited to, the following:

a. Dimensional changes to Drawings.
b. Revisions to details shown on Drawings.
c. Depths of foundations.
d. Locations and depths of underground utilities.
e. Revisions to routing of piping and conduits.
f. Revisions to electrical circuitry.
g. Actual equipment locations.
h. Duct size and routing.
i. Locations of concealed internal utilities.
j. Changes made by Change Order or Construction Change Directive.
k. Changes made following Engineer's written orders.
l. Details not on the original Contract Drawings.
m. Field records for variable and concealed conditions.
n. Record information on the Work that is shown only schematically.

3. Mark the Contract Drawings and Shop Drawings completely and accurately. Use personnel proficient at recording graphic information in production of marked-up record prints.
4. Mark record prints with erasable, red-colored pencil. Use other colors to distinguish between changes for different categories of the Work at same location.
5. Mark important additional information that was either shown schematically or omitted from original Drawings.
6. Note Construction Change Directive numbers, alternate numbers, Change Order numbers, and similar identification, where applicable.

B. Record Digital Data Files: Immediately before inspection for Certificate of Substantial Completion, review marked-up record prints with Engineer. When authorized, prepare a full set of corrected digital data files of the Contract Drawings, as follows:

1. Format: Same digital data software program, version, and operating system as for the original Contract Drawings.
2. Format: DWG.

3. Format: Annotated PDF electronic file.
4. Incorporate changes and additional information previously marked on record prints. Delete, redraw, and add details and notations where applicable.
5. Refer instances of uncertainty to Engineer for resolution.
6. Engineer will furnish Contractor with one set of digital data files of the Contract Drawings for use in recording information.

    a. See Section 013100 "Project Management and Coordination" for requirements related to use of Engineer's digital data files.
    b. Engineer will provide data file layer information. Record markups in separate layers.

C. Format: Identify and date each Record Drawing; include the designation "PROJECT RECORD DRAWING" in a prominent location.

1. Record Prints: Organize record prints into manageable sets. Bind each set with durable paper cover sheets. Include identification on cover sheets.
2. Format: Annotated PDF electronic file.
3. Record Digital Data Files: Organize digital data information into separate electronic files that correspond to each sheet of the Contract Drawings. Name each file with the sheet identification. Include identification in each digital data file.
4. Identification: As follows:

    a. Project name.
    b. Date.
    c. Designation "PROJECT RECORD DRAWINGS."
    d. Name of Engineer.
    e. Name of Contractor.

1.5 RECORD SPECIFICATIONS

A. Preparation: Mark Specifications to indicate the actual product installation, where installation varies from that indicated in Specifications, addenda, and Contract modifications.

1. Give particular attention to information on concealed products and installations that cannot be readily identified and recorded later.

B. Format: Submit record specifications as annotated PDF electronic file.

1.6 RECORD PRODUCT DATA

A. Recording: Maintain one copy of each submittal during the construction period for Project Record Document purposes. Post changes and revisions to Project Record Documents as they occur; do not wait until end of Project.

B. Preparation: Mark Product Data to indicate the actual product installation where installation varies substantially from that indicated in Product Data submittal.

1. Give particular attention to information on concealed products and installations that cannot be readily identified and recorded later.
2. Include significant changes in the product delivered to Project site and changes in manufacturer's written instructions for installation.
3. Note related Change Orders, Record Specifications, and Record Drawings where applicable.

C. Format: Submit Record Product Data as annotated PDF electronic file.

1. Include Record Product Data directory organized by Specification Section number and title, electronically linked to each item of Record Product Data.

1.7 MAINTENANCE OF RECORD DOCUMENTS

A. Maintenance of Record Documents: Store Record Documents in the field office apart from the Contract Documents used for construction. Do not use Project Record Documents for construction purposes. Maintain Record Documents in good order and in a clean, dry, legible condition, protected from deterioration and loss. Provide access to Project Record Documents for Engineer's reference during normal working hours.

PART 2 - PRODUCTS (Not Used)

PART 3 - EXECUTION (Not Used)

END OF SECTION 017839

SECTION 017900 - DEMONSTRATION AND TRAINING

PART 1 - GENERAL

1.1 SUMMARY

A. Section includes administrative and procedural requirements for instructing Owner's personnel, including the following:

1. Instruction in operation and maintenance of systems, subsystems, and equipment.
2. Demonstration and training video recordings.

1.2 INFORMATIONAL SUBMITTALS

A. Instruction Program: Submit outline of instructional program for demonstration and training, including a list of training modules and a schedule of proposed dates, times, length of instruction time, and instructors' names for each training module. Include learning objective and outline for each training module.

1. Indicate proposed training modules using manufacturer-produced demonstration and training video recordings for systems, equipment, and products in lieu of video recording of live instructional module.

B. Qualification Data: For instructor.

C. Attendance Record: For each training module, submit list of participants and length of instruction time.

D. Evaluations: For each participant and for each training module, submit results and documentation of performance-based test.

1.3 CLOSEOUT SUBMITTALS

A. Demonstration and Training Video Recordings: Submit two copies within seven days of end of each training module.

1. Identification: On each copy, provide an applied label with the following information:

a. Name of Project.
b. Name and address of videographer.
c. Name of Architect.
d. Name of Construction Manager.
e. Name of Contractor.
f. Date of video recording.

2. Transcript: Prepared and bound in format matching operation and maintenance manuals. Mark appropriate identification on front and spine of each binder. Include a cover sheet

with same label information as the corresponding video recording. Include name of Project and date of video recording on each page.

3. Transcript: Prepared in PDF electronic format. Include a cover sheet with same label information as the corresponding video recording and a table of contents with links to corresponding training components. Include name of Project and date of video recording on each page.
4. At completion of training, submit complete training manual(s) for Owner's use prepared in same paper and PDF file format required for operation and maintenance manuals specified in Section 017823 "Operation and Maintenance Data."

1.4 QUALITY ASSURANCE

A. Facilitator Qualifications: A firm or individual experienced in training or educating maintenance personnel in a training program similar in content and extent to that indicated for this Project, and whose work has resulted in training or education with a record of successful learning performance.

B. Instructor Qualifications: A factory-authorized service representative, complying with requirements in Section 014000 "Quality Requirements," experienced in operation and maintenance procedures and training.

C. Videographer Qualifications: A professional videographer who is experienced photographing demonstration and training events similar to those required.

1.5 COORDINATION

A. Coordinate instruction schedule with Owner's operations. Adjust schedule as required to minimize disrupting Owner's operations and to ensure availability of Owner's personnel.

B. Coordinate instructors, including providing notification of dates, times, length of instruction time, and course content.

C. Coordinate content of training modules with content of approved emergency, operation, and maintenance manuals. Do not submit instruction program until operation and maintenance data have been reviewed and approved by Architect.

1.6 INSTRUCTION PROGRAM

A. Program Structure: Develop an instruction program that includes individual training modules for each system and for equipment not part of a system, as required by individual Specification Sections.

B. Training Modules: Develop a learning objective and teaching outline for each module. Include a description of specific skills and knowledge that participant is expected to master. For each module, include instruction for the following as applicable to the system, equipment, or component:

1. Basis of System Design, Operational Requirements, and Criteria: Include the following:

a. System, subsystem, and equipment descriptions.
b. Performance and design criteria if Contractor is delegated design responsibility.
c. Operating standards.
d. Regulatory requirements.
e. Equipment function.
f. Operating characteristics.
g. Limiting conditions.
h. Performance curves.

2. Documentation: Review the following items in detail:

a. Emergency manuals.
b. Systems and equipment operation manuals.
c. Systems and equipment maintenance manuals.
d. Product maintenance manuals.
e. Project Record Documents.
f. Identification systems.
g. Warranties and bonds.
h. Maintenance service agreements and similar continuing commitments.

3. Emergencies: Include the following, as applicable:

a. Instructions on meaning of warnings, trouble indications, and error messages.
b. Instructions on stopping.
c. Shutdown instructions for each type of emergency.
d. Operating instructions for conditions outside of normal operating limits.
e. Sequences for electric or electronic systems.
f. Special operating instructions and procedures.

4. Operations: Include the following, as applicable:

a. Startup procedures.
b. Equipment or system break-in procedures.
c. Routine and normal operating instructions.
d. Regulation and control procedures.
e. Control sequences.
f. Safety procedures.
g. Instructions on stopping.
h. Normal shutdown instructions.
i. Operating procedures for emergencies.
j. Operating procedures for system, subsystem, or equipment failure.
k. Seasonal and weekend operating instructions.
l. Required sequences for electric or electronic systems.
m. Special operating instructions and procedures.

5. Adjustments: Include the following:

a. Alignments.
b. Checking adjustments.
c. Noise and vibration adjustments.
d. Economy and efficiency adjustments.

6. Troubleshooting: Include the following:

    a. Diagnostic instructions.
    b. Test and inspection procedures.

7. Maintenance: Include the following:

    a. Inspection procedures.
    b. Types of cleaning agents to be used and methods of cleaning.
    c. List of cleaning agents and methods of cleaning detrimental to product.
    d. Procedures for routine cleaning.
    e. Procedures for preventive maintenance.
    f. Procedures for routine maintenance.
    g. Instruction on use of special tools.

8. Repairs: Include the following:

    a. Diagnosis instructions.
    b. Repair instructions.
    c. Disassembly; component removal, repair, and replacement; and reassembly instructions.
    d. Instructions for identifying parts and components.
    e. Review of spare parts needed for operation and maintenance.

1.7 PREPARATION

A. Assemble educational materials necessary for instruction, including documentation and training module. Assemble training modules into a training manual organized in coordination with requirements in Section 017823 "Operation and Maintenance Data."

B. Set up instructional equipment at instruction location.

1.8 INSTRUCTION

A. Facilitator: Engage a qualified facilitator to prepare instruction program and training modules, to coordinate instructors, and to coordinate between Contractor and Owner for number of participants, instruction times, and location.

B. Engage qualified instructors to instruct Owner's personnel to adjust, operate, and maintain systems, subsystems, and equipment not part of a system.

C. Scheduling: Provide instruction at mutually agreed-on times. For equipment that requires seasonal operation, provide similar instruction at start of each season.

    1. Schedule training with Owner, through Construction Manager, with at least seven days' advance notice.

D. Training Location and Reference Material: Conduct training on-site in the completed and fully operational facility using the actual equipment in-place. Conduct training using final operation and maintenance data submittals.

E. Evaluation: At conclusion of each training module, assess and document each participant's mastery of module by use of a written performance-based test.

F. Cleanup: Collect used and leftover educational materials and remove from Project site. Remove instructional equipment. Restore systems and equipment to condition existing before initial training use.

1.9 DEMONSTRATION AND TRAINING VIDEO RECORDINGS

A. Digital Video Recordings: Provide high-resolution, digital video in MPEG format, produced by a digital camera with minimum sensor resolution of 12 megapixels and capable of recording in full HD mode with vibration reduction technology.

1. Submit video recordings by uploading to web-based Project software site.
2. File Hierarchy: Organize folder structure and file locations according to Project Manual table of contents. Provide complete screen-based menu.
3. File Names: Utilize file names based on name of equipment generally described in video segment, as identified in Project specifications.
4. Contractor and Installer Contact File: Using appropriate software, create a file for inclusion on the equipment demonstration and training recording that describes the following for each Contractor involved on the Project, arranged according to Project Manual table of contents:

    a. Name of Contractor/Installer.
    b. Business address.
    c. Business phone number.
    d. Point of contact.
    e. Email address.

B. Recording: Mount camera on tripod before starting recording, unless otherwise necessary to adequately cover area of demonstration and training. Display continuous running time.

1. Film training session(s) in segments not to exceed 15 minutes.

    a. Produce segments to present a single significant piece of equipment per segment.
    b. Organize segments with multiple pieces of equipment to follow order of Project Manual table of contents.
    c. Where a training session on a particular piece of equipment exceeds 15 minutes, stop filming and pause training session. Begin training session again upon commencement of new filming segment.

C. Light Levels: Verify light levels are adequate to properly light equipment. Verify equipment markings are clearly visible prior to recording.

1. Furnish additional portable lighting as required.

D. Transcript: Provide a transcript of the narration. Display images and running time captured from videotape opposite the corresponding narration segment.

E. Preproduced Video Recordings: Provide video recordings used as a component of training modules in same format as recordings of live training.

PART 2 - PRODUCTS

PART 3 - EXECUTION

END OF SECTION 017900

SECTION 024119 - SELECTIVE DEMOLITION

PART 1 - GENERAL

1.1 SUMMARY

A. Section Includes:

1. Demolition and removal of selected portions of building or structure.
2. Demolition and removal of selected site elements.
3. Salvage of existing items to be reused or recycled.

B. Related Requirements:

1. Section 017300 "Execution" for cutting and patching procedures.
2. Section 013516 "Alteration Project Procedures" for general protection and work procedures for alteration projects.

1.2 DEFINITIONS

A. Remove: Detach items from existing construction and dispose of them off-site unless indicated to be salvaged or reinstalled.

B. Remove and Salvage: Detach items from existing construction, in a manner to prevent damage, and deliver to Owner ready for reuse.

C. Remove and Reinstall: Detach items from existing construction, in a manner to prevent damage, prepare for reuse, and reinstall where indicated.

D. Existing to Remain: Leave existing items that are not to be removed and that are not otherwise indicated to be salvaged or reinstalled.

E. Dismantle: To remove by disassembling or detaching an item from a surface, using gentle methods and equipment to prevent damage to the item and surfaces; disposing of items unless indicated to be salvaged or reinstalled.

1.3 MATERIALS OWNERSHIP

A. Unless otherwise indicated, demolition waste becomes property of Contractor.

B. Historic items, relics, antiques, and similar objects including, but not limited to, cornerstones and their contents, commemorative plaques and tablets, and other items of interest or value to Owner that may be uncovered during demolition remain the property of Owner.

1. Carefully salvage in a manner to prevent damage and promptly return to Owner.

1.4 PREINSTALLATION MEETINGS

A. Predemolition Conference: Conduct conference at Project site.

1. Inspect and discuss condition of construction to be selectively demolished.
2. Review structural load limitations of existing structure.
3. Review and finalize selective demolition schedule and verify availability of materials, demolition personnel, equipment, and facilities needed to make progress and avoid delays.
4. Review requirements of work performed by other trades that rely on substrates exposed by selective demolition operations.
5. Review areas where existing construction is to remain and requires protection.

1.5 INFORMATIONAL SUBMITTALS

A. Qualification Data: For refrigerant recovery technician.

B. Proposed Protection Measures: Submit report, including Drawings, that indicates the measures proposed for protecting individuals and property, for environmental protection, for dust control, and for noise control. Indicate proposed locations and construction of barriers.

C. Schedule of Selective Demolition Activities: Indicate the following:

1. Detailed sequence of selective demolition and removal work, with starting and ending dates for each activity. Ensure Owner's on-site operations are uninterrupted.
2. Interruption of utility services. Indicate how long utility services will be interrupted.
3. Coordination for shutoff, capping, and continuation of utility services.
4. Use of elevator and stairs.
5. Coordination of Owner's continuing occupancy of portions of existing building and of Owner's partial occupancy of completed Work.

D. Predemolition Photographs or Video: Show existing conditions of adjoining construction, including finish surfaces, that might be misconstrued as damage caused by salvage and demolition operations. Submit before Work begins.

E. Statement of Refrigerant Recovery: Signed by refrigerant recovery technician responsible for recovering refrigerant, stating that all refrigerant that was present was recovered and that recovery was performed according to EPA regulations. Include name and address of technician and date refrigerant was recovered.

F. Warranties: Documentation indicating that existing warranties are still in effect after completion of selective demolition.

1.6 CLOSEOUT SUBMITTALS

A. Inventory: Submit a list of items that have been removed and salvaged.

1.7 QUALITY ASSURANCE

A. Refrigerant Recovery Technician Qualifications: Certified by an EPA-approved certification program.

1.8 FIELD CONDITIONS

A. Owner will occupy portions of building immediately adjacent to selective demolition area. Conduct selective demolition so Owner's operations will not be disrupted.

B. Conditions existing at time of inspection for bidding purpose will be maintained by Owner as far as practical.

C. Notify Engineer of discrepancies between existing conditions and Drawings before proceeding with selective demolition.

D. Hazardous Materials: Present in buildings and structures to be selectively demolished. A report on the presence of hazardous materials is on file for review and use. Examine report to become aware of locations where hazardous materials are present.

1. Hazardous material remediation is specified elsewhere in the Contract Documents.
2. Do not disturb hazardous materials or items suspected of containing hazardous materials except under procedures specified elsewhere in the Contract Documents.

E. Storage or sale of removed items or materials on-site is not permitted.

F. Utility Service: Maintain existing utilities indicated to remain in service and protect them against damage during selective demolition operations.

1.9 COORDINATION

A. Arrange selective demolition schedule so as not to interfere with Owner's operations.

PART 2 - PRODUCTS

2.1 PERFORMANCE REQUIREMENTS

A. Regulatory Requirements: Comply with governing EPA notification regulations before beginning selective demolition. Comply with hauling and disposal regulations of authorities having jurisdiction.

B. Standards: Comply with ANSI/ASSP A10.6 and NFPA 241.

PART 3 - EXECUTION

3.1 EXAMINATION

A. Verify that utilities have been disconnected and capped before starting selective demolition operations.

B. Review Project Record Documents of existing construction or other existing condition and hazardous material information provided by Owner. Owner does not guarantee that existing conditions are same as those indicated in Project Record Documents.

C. Perform an engineering survey of condition of building to determine whether removing any element might result in structural deficiency or unplanned collapse of any portion of structure or adjacent structures during selective building demolition operations.

1. Perform surveys as the Work progresses to detect hazards resulting from selective demolition activities.

D. Verify that hazardous materials have been remediated before proceeding with building demolition operations.

E. Survey of Existing Conditions: Record existing conditions by use of measured drawings and preconstruction photographs or video.

3.2 PREPARATION

A. Refrigerant: Before starting demolition, remove refrigerant from mechanical equipment according to 40 CFR 82 and regulations of authorities having jurisdiction.

3.3 UTILITY SERVICES AND MECHANICAL/ELECTRICAL SYSTEMS

A. Existing Services/Systems to Remain: Maintain services/systems indicated to remain and protect them against damage.

B. Existing Services/Systems to Be Removed, Relocated, or Abandoned: Locate, identify, disconnect, and seal or cap off utility services and mechanical/electrical systems serving areas to be selectively demolished.

1. Arrange to shut off utilities with utility companies.
2. If services/systems are required to be removed, relocated, or abandoned, provide temporary services/systems that bypass area of selective demolition and that maintain continuity of services/systems to other parts of building.
3. Disconnect, demolish, and remove fire-suppression systems, plumbing, and HVAC systems, equipment, and components indicated on Drawings to be removed.

a. Piping to Be Removed: Remove portion of piping indicated to be removed and cap or plug remaining piping with same or compatible piping material.

b. Piping to Be Abandoned in Place: Drain piping and cap or plug piping with same or compatible piping material and leave in place.
c. Equipment to Be Removed: Disconnect and cap services and remove equipment.
d. Equipment to Be Removed and Reinstalled: Disconnect and cap services and remove, clean, and store equipment; when appropriate, reinstall, reconnect, and make equipment operational.
e. Equipment to Be Removed and Salvaged: Disconnect and cap services and remove equipment and deliver to Owner.
f. Ducts to Be Removed: Remove portion of ducts indicated to be removed and plug remaining ducts with same or compatible ductwork material.
g. Ducts to Be Abandoned in Place: Cap or plug ducts with same or compatible ductwork material and leave in place.

3.4 PROTECTION

A. Temporary Protection: Provide temporary barricades and other protection required to prevent injury to people and damage to adjacent buildings and facilities to remain.

1. Provide protection to ensure safe passage of people around selective demolition area and to and from occupied portions of building.
2. Provide temporary weather protection, during interval between selective demolition of existing construction on exterior surfaces and new construction, to prevent water leakage and damage to structure and interior areas.
3. Protect walls, ceilings, floors, and other existing finish work that are to remain or that are exposed during selective demolition operations.
4. Cover and protect furniture, furnishings, and equipment that have not been removed.

B. Temporary Shoring: Design, provide, and maintain shoring, bracing, and structural supports as required to preserve stability and prevent movement, settlement, or collapse of construction and finishes to remain, and to prevent unexpected or uncontrolled movement or collapse of construction being demolished.

1. Strengthen or add new supports when required during progress of selective demolition.

C. Remove temporary barricades and protections where hazards no longer exist.

3.5 SELECTIVE DEMOLITION, GENERAL

A. General: Demolish and remove existing construction only to the extent required by new construction and as indicated. Use methods required to complete the Work within limitations of governing regulations and as follows:

1. Proceed with selective demolition systematically, from higher to lower level. Complete selective demolition operations above each floor or tier before disturbing supporting members on the next lower level.
2. Neatly cut openings and holes plumb, square, and true to dimensions required. Use cutting methods least likely to damage construction to remain or adjoining construction. Use hand tools or small power tools designed for sawing or grinding, not hammering and chopping. Temporarily cover openings to remain.

3. Cut or drill from the exposed or finished side into concealed surfaces to avoid marring existing finished surfaces.
4. Do not use cutting torches until work area is cleared of flammable materials. At concealed spaces, such as duct and pipe interiors, verify condition and contents of hidden space before starting flame-cutting operations. Maintain portable fire-suppression devices during flame-cutting operations.
5. Maintain fire watch during and for at least 2 hours after flame-cutting operations.
6. Maintain adequate ventilation when using cutting torches.
7. Remove decayed, vermin-infested, or otherwise dangerous or unsuitable materials and promptly dispose of off-site.
8. Remove structural framing members and lower to ground by method suitable to avoid free fall and to prevent ground impact or dust generation.
9. Locate selective demolition equipment and remove debris and materials so as not to impose excessive loads on supporting walls, floors, or framing.
10. Dispose of demolished items and materials promptly. Comply with requirements in Section 017419 "Construction Waste Management and Disposal."

B. Site Access and Temporary Controls: Conduct selective demolition and debris-removal operations to ensure minimum interference with roads, streets, walks, walkways, and other adjacent occupied and used facilities.

C. Removed and Salvaged Items:

1. Clean salvaged items.
2. Pack or crate items after cleaning. Identify contents of containers.
3. Store items in a secure area until delivery to Owner.
4. Transport items to Owner's storage area designated by Owner.
5. Protect items from damage during transport and storage.

D. Removed and Reinstalled Items:

1. Clean and repair items to functional condition adequate for intended reuse.
2. Pack or crate items after cleaning and repairing. Identify contents of containers.
3. Protect items from damage during transport and storage.
4. Reinstall items in locations indicated. Comply with installation requirements for new materials and equipment. Provide connections, supports, and miscellaneous materials necessary to make item functional for use indicated.

E. Existing Items to Remain: Protect construction indicated to remain against damage and soiling during selective demolition. When permitted by Architect, items may be removed to a suitable, protected storage location during selective demolition and cleaned and reinstalled in their original locations after selective demolition operations are complete.

3.6 SELECTIVE DEMOLITION PROCEDURES FOR SPECIFIC MATERIALS

A. Concrete Slabs-on-Grade: Saw-cut perimeter of area to be demolished, and then break up and remove.

3.7 DISPOSAL OF DEMOLISHED MATERIALS

A. Remove demolition waste materials from Project site and dispose of them in an EPA-approved construction and demolition waste landfill acceptable to authorities having jurisdiction.

1. Do not allow demolished materials to accumulate on-site.
2. Remove and transport debris in a manner that will prevent spillage on adjacent surfaces and areas.
3. Remove debris from elevated portions of building by chute, hoist, or other device that will convey debris to grade level in a controlled descent.
4. Comply with requirements specified in Section 017419 "Construction Waste Management and Disposal."

B. Burning: Do not burn demolished materials.

3.8 CLEANING

A. Clean adjacent structures and improvements of dust, dirt, and debris caused by selective demolition operations. Return adjacent areas to condition existing before selective demolition operations began.

END OF SECTION 024119

SECTION 033000 - CAST-IN-PLACE CONCRETE

PART 1 - GENERAL

1.1 SUMMARY

A. Section Includes:

1. Cast-in-place concrete, including concrete materials, mixture design, placement procedures, and finishes.

1.2 DEFINITIONS

A. Cementitious Materials: Portland cement alone or in combination with one or more of the following: blended hydraulic cement, fly ash, slag cement, other pozzolans, and silica fume; materials subject to compliance with requirements.

B. Water/Cement Ratio (w/cm): The ratio by weight of water to cementitious materials.

1.3 ACTION SUBMITTALS

A. Product Data: For each of the following.

1. Portland cement.
2. Fly ash.
3. Slag cement.
4. Blended hydraulic cement.
5. Silica fume.
6. Performance-based hydraulic cement
7. Aggregates.
8. Admixtures:

    a. Include limitations of use, including restrictions on cementitious materials, supplementary cementitious materials, air entrainment, aggregates, temperature at time of concrete placement, relative humidity at time of concrete placement, curing conditions, and use of other admixtures.
9. Curing materials.

    a. Include documentation from color pigment manufacturer, indicating that proposed methods of curing are recommended by color pigment manufacturer.

10. Joint fillers.
11. Repair materials.

B. Design Mixtures: For each concrete mixture, include the following:

1. Mixture identification.

2. Minimum 28-day compressive strength.
3. Durability exposure class.
4. Maximum w/cm.
5. Calculated equilibrium unit weight, for lightweight concrete.
6. Slump limit.
7. Air content.
8. Nominal maximum aggregate size.
9. Steel-fiber reinforcement content.
10. Synthetic micro-fiber content.
11. Indicate amounts of mixing water to be withheld for later addition at Project site if permitted.
12. Include manufacturer's certification that permeability-reducing admixture is compatible with mix design.
13. Include certification that dosage rate for permeability-reducing admixture matches dosage rate used in performance compliance test.
14. Intended placement method.
15. Submit alternate design mixtures when characteristics of materials, Project conditions, weather, test results, or other circumstances warrant adjustments.

1.4 INFORMATIONAL SUBMITTALS

A. Qualification Data: For the following:

1. Installer: Include copies of applicable ACI certificates.
2. Ready-mixed concrete manufacturer.
3. Testing agency: Include copies of applicable ACI certificates.

B. Material Certificates: For each of the following, signed by manufacturers:

1. Cementitious materials.
2. Admixtures.
3. Fiber reinforcement.
4. Curing compounds.
5. Floor and slab treatments.
6. Bonding agents.
7. Adhesives.
8. Vapor retarders.
9. Semirigid joint filler.
10. Joint-filler strips.
11. Repair materials.

C. Floor surface flatness and levelness measurements report, indicating compliance with specified tolerances.

D. Preconstruction Test Reports: For each mix design.

E. Field quality-control reports.

1.5 QUALITY ASSURANCE

A. Installer Qualifications: A qualified installer who employs Project personnel qualified as an ACI-certified Flatwork Technician and Finisher and a supervisor who is a certified ACI Flatwork Concrete Finisher/Technician or an ACI Concrete Flatwork Technician with experience installing and finishing concrete, incorporating permeability-reducing admixtures.

1. Post-Installed Concrete Anchors Installers: ACI-certified Adhesive Anchor Installer.

B. Ready-Mixed Concrete Manufacturer Qualifications: A firm experienced in manufacturing ready-mixed concrete products and that complies with ASTM C94/C94M requirements for production facilities and equipment.

1. Manufacturer certified in accordance with NRMCA's "Certification of Ready Mixed Concrete Production Facilities."

C. Laboratory Testing Agency Qualifications: A testing agency qualified in accordance with ASTM C1077 and ASTM E329 for testing indicated and employing an ACI-certified Concrete Quality Control Technical Manager.

1. Personnel performing laboratory tests to be an ACI-certified Concrete Strength Testing Technician and Concrete Laboratory Testing Technician, Grade I. Testing agency laboratory supervisor to be an ACI-certified Concrete Laboratory Testing Technician, Grade II.

1.6 DELIVERY, STORAGE, AND HANDLING

A. Comply with ASTM C94/C94M and ACI 301 (ACI 301M).

1.7 FIELD CONDITIONS

A. Cold-Weather Placement: Comply with ACI 301 (ACI 301M) and ACI 306.1 and as follows.

1. Protect concrete work from physical damage or reduced strength that could be caused by frost, freezing actions, or low temperatures.
2. When average high and low temperature is expected to fall below 40 deg F (4.4 deg C) for three successive days, maintain delivered concrete mixture temperature within the temperature range required by ACI 301 (ACI 301M).
3. Do not use frozen materials or materials containing ice or snow.
4. Do not place concrete in contact with surfaces less than 35 deg F (1.7 deg C), other than reinforcing steel.
5. Do not use calcium chloride, salt, or other materials containing antifreeze agents or chemical accelerators unless otherwise specified and approved in mixture designs.

B. Hot-Weather Placement: Comply with ACI 301 (ACI 301M) and ACI 305.1 (ACI 305.1M), and as follows:

1. Maintain concrete temperature at time of discharge to not exceed 95 deg F (35 deg C).

2. Fog-spray forms, steel reinforcement, and subgrade just before placing concrete. Keep subgrade uniformly moist without standing water, soft spots, or dry areas.

1.8 WARRANTY

A. Manufacturer's Warranty: Manufacturer agrees to furnish replacement sheet vapor retarder/termite barrier material and accessories for sheet vapor retarder/ termite barrier and accessories that do not comply with requirements or that fail to resist penetration by termites within specified warranty period.

1. Warranty Period: 10 years from date of Substantial Completion.

PART 2 - PRODUCTS

2.1 CONCRETE, GENERAL

A. ACI Publications: Comply with ACI 301 (ACI 301M) unless modified by requirements in the Contract Documents.

2.2 CONCRETE MATERIALS

A. Source Limitations:

1. Obtain all concrete mixtures from a single ready-mixed concrete manufacturer for entire Project.
2. Obtain each type or class of cementitious material of the same brand from the same manufacturer's plant.
3. Obtain aggregate from single source.
4. Obtain each type of admixture from single source from single manufacturer.

B. Cementitious Materials:

1. Portland Cement: ASTM C150/C150M, Type I, gray.
2. Fly Ash: ASTM C618, Class C or F.
3. Slag Cement: ASTM C989/C989M, Grade 100 or 120.
4. Silica Fume: ASTM C1240 amorphous silica.

C. Normal-Weight Aggregates: ASTM C33/C33M, Class 3S, Class 3M, coarse aggregate or better, graded. Provide aggregates from a single source.

1. Alkali-Silica Reaction: Comply with one of the following:

a. Expansion Result of Aggregate: Not more than 0.04 percent at one-year when tested in accordance with ASTM C1293.
b. Expansion Results of Aggregate and Cementitious Materials in Combination: Not more than 0.10 percent at an age of 16 days when tested in accordance with ASTM C1567.

c. Alkali Content in Concrete: Not more than 4 lb./cu. yd. (2.37 kg/cu. m) for moderately reactive aggregate or 3 lb./cu. yd. (1.78 kg/cu. m) for highly reactive aggregate, when tested in accordance with ASTM C1293 and categorized in accordance with ASTM C1778, based on alkali content being calculated in accordance with ACI 301 (ACI 301M).

2. Maximum Coarse-Aggregate Size: 1-1/2 inches (38 mm) nominal.
3. Fine Aggregate: Free of materials with deleterious reactivity to alkali in cement.

D. Lightweight Aggregate: ASTM C330/C330M, 1-inch (25-mm) nominal maximum aggregate size.

E. Air-Entraining Admixture: ASTM C260/C260M.

F. Chemical Admixtures: Certified by manufacturer to be compatible with other admixtures that do not contribute water-soluble chloride ions exceeding those permitted in hardened concrete. Do not use calcium chloride or admixtures containing calcium chloride in steel-reinforced concrete.

1. Water-Reducing Admixture: ASTM C494/C494M, Type A.
2. Retarding Admixture: ASTM C494/C494M, Type B.
3. Water-Reducing and -Retarding Admixture: ASTM C494/C494M, Type D.
4. High-Range, Water-Reducing Admixture: ASTM C494/C494M, Type F.
5. High-Range, Water-Reducing and -Retarding Admixture: ASTM C494/C494M, Type G.
6. Plasticizing and Retarding Admixture: ASTM C1017/C1017M, Type II.
7. Set-Accelerating Corrosion-Inhibiting Admixture: Commercially formulated, anodic inhibitor or mixed cathodic and anodic inhibitor; capable of forming a protective barrier and minimizing chloride reactions with steel reinforcement in concrete and complying with ASTM C494/C494M, Type C.

8. Non-Set-Accelerating Corrosion-Inhibiting Admixture: Commercially formulated, non-set-accelerating, anodic inhibitor or mixed cathodic and anodic inhibitor; capable of forming a protective barrier and minimizing chloride reactions with steel reinforcement in concrete.

9. Permeability-Reducing Admixture: ASTM C494/C494M, Type S, hydrophilic, permeability-reducing crystalline admixture, capable of reducing water absorption of concrete exposed to hydrostatic pressure (PRAH).

a. Permeability: No leakage when tested in accordance with U.S. Army Corps of Engineers CRD C48 at a hydraulic pressure of 200 psi (1.28 MPa) for 14 days.

G. Water and Water Used to Make Ice: ASTM C94/C94M, potable or complying with ASTM C1602/C1602M, including all limits listed in Table 2 and the requirements of paragraph 5.4

2.3 VAPOR RETARDERS

A. Sheet Vapor Retarder, Class A: ASTM E1745, Class A; not less than 10 mils (0.25 mm) thick. Include manufacturer's recommended adhesive or pressure-sensitive tape.

B. Sheet Vapor Retarder, Class C: ASTM E1745, Class C; not less than 10 mils (0.25 mm) thick. Include manufacturer's recommended adhesive or pressure-sensitive joint tape.

C. Sheet Vapor Retarder/Termite Barrier: ASTM E1745, Class A, except with maximum water-vapor permeance of 0.03 perms; complying with ICC AC380. Include manufacturer's recommended adhesive or pressure-sensitive tape.

1. Low-Temperature Flexibility: Pass at minus 15 deg F (minus 26 deg C); ASTM D146/D146M.
2. Puncture Resistance: 224 lbf (996 N) minimum; ASTM E154/E154M.
3. Water Absorption: 0.1 percent weight-gain maximum after 48-hour immersion at 70 deg F (21 deg C); ASTM D570.
4. Hydrostatic-Head Resistance: 231 feet (70 m) minimum; ASTM D5385.

D. Bituminous Vapor Retarder: ASTM E1993/E1993M, 110-mil- (2.8-mm-) thick, semiflexible, seven-ply sheet membrane, consisting of reinforced core and carrier sheet with fortified asphalt layers, protective weather coating, and removable plastic release liner. Furnish manufacturer's accessories, including bonding asphalt, pointing mastics, and self-adhering joint tape.

1. Water-Vapor Permeance: 0.0011 grains/h x sq. ft. x inches Hg (0.063 ng/Pa x s x sq. m) when tested in accordance with ASTM E154/E154M.
2. Tensile Strength: 156 lbf/inch (27.35 kN/m) when tested in accordance with ASTM E154/E154M.
3. Puncture Resistance: 140 lbf (662N) when tested in accordance with ASTM E154/E154M.

2.4 CURING MATERIALS

A. Evaporation Retarder: Waterborne, monomolecular film forming, manufactured for application to fresh concrete.

B. Absorptive Cover: AASHTO M 182, Class 2, burlap cloth made from jute or kenaf, weighing approximately 9 oz./sq. yd. (305 g/sq. m) when dry.

C. Moisture-Retaining Cover: ASTM C171, polyethylene film burlap-polyethylene sheet.

1. Color:

a. Ambient Temperature Below 50 deg F (10 deg C): Black.
b. Ambient Temperature between 50 deg F (10 deg C) and 85 deg F (29 deg C): Any color.
c. Ambient Temperature Above 85 deg F (29 deg C): White.

D. Curing Paper: 8-feet- (2438-mm-) wide paper, consisting of two layers of fibered kraft paper laminated with double coating of asphalt.

E. Water: Potable or complying with ASTM C1602/C1602M.

F. Clear, Waterborne, Membrane-Forming, Dissipating Curing Compound: ASTM C309, Type 1, Class B.

G. Clear, Waterborne, Membrane-Forming, Nondissipating Curing Compound: ASTM C309, Type 1, Class B, certified by curing compound manufacturer to not interfere with bonding of floor covering.

H. Clear, Waterborne, Membrane-Forming, Curing Compound: ASTM C309, Type 1, Class B, 18 to 25 percent solids, nondissipating, certified by curing compound manufacturer to not interfere with bonding of floor covering.

I. Clear, Solvent-Borne, Membrane-Forming, Curing and Sealing Compound: ASTM C1315, Type 1, Class A.

J. Clear, Waterborne, Membrane-Forming, Curing and Sealing Compound: ASTM C1315, Type 1, Class A.

2.5 RELATED MATERIALS

A. Expansion- and Isolation-Joint-Filler Strips: ASTM D1751, asphalt-saturated cellulosic fiber or ASTM D1752, cork or self-expanding cork.

B. Semirigid Joint Filler: Two-component, semirigid, 100 percent solids, epoxy resin with a Type A shore durometer hardness of 80 in accordance with ASTM D2240.

C. Bonding Agent: ASTM C1059/C1059M, Type II, nonredispersible, acrylic emulsion or styrene butadiene.

D. Epoxy Bonding Adhesive: ASTM C881, two-component epoxy resin, capable of humid curing and bonding to damp surfaces, of class suitable for application temperature and of grade and class to suit requirements, and as follows:

1. Types I and II, nonload bearing, for bonding hardened or freshly mixed concrete to hardened concrete.

2.6 REPAIR MATERIALS

A. Repair Underlayment: Cement-based, polymer-modified, self-leveling product that can be applied in thicknesses from 1/8 inch (3 mm) and that can be feathered at edges to match adjacent floor elevations.

1. Cement Binder: ASTM C150/C150M portland cement or hydraulic or blended hydraulic cement, as defined in ASTM C219.
2. Primer: Product of underlayment manufacturer recommended for substrate, conditions, and application.
3. Aggregate: Well-graded, washed gravel, 1/8 to 1/4 inch (3 to 6 mm) or coarse sand, as recommended by underlayment manufacturer.
4. Compressive Strength: Not less than 4100 psi (29 MPa) at 28 days when tested in accordance with ASTM C109/C109M.

B. Repair Overlayment: Cement-based, polymer-modified, self-leveling product that can be applied in thicknesses from 1/4 inch (6 mm) and that can be filled in over a scarified surface to match adjacent floor elevations.

1. Cement Binder: ASTM C150/C150M portland cement or hydraulic or blended hydraulic cement, as defined in ASTM C219.
2. Primer: Product of topping manufacturer recommended for substrate, conditions, and application.
3. Aggregate: Well-graded, washed gravel, 1/8 to 1/4 inch (3.2 to 6 mm) or coarse sand as recommended by topping manufacturer.
4. Compressive Strength: Not less than 5000 psi (34.5 MPa) at 28 days when tested in accordance with ASTM C109/C109M.

2.7 CONCRETE MIXTURES, GENERAL

A. Prepare design mixtures for each type and strength of concrete, proportioned on the basis of laboratory trial mixture or field test data, or both, in accordance with ACI 301 (ACI 301M).

1. Use a qualified testing agency for preparing and reporting proposed mixture designs, based on laboratory trial mixtures.

B. Cementitious Materials: Limit percentage, by weight, of cementitious materials other than portland cement in concrete as follows:

1. Fly Ash or Other Pozzolans: 25 percent by mass.
2. Slag Cement: 50 percent by mass.
3. Silica Fume: 10 percent by mass.
4. Total of Fly Ash or Other Pozzolans, Slag Cement, and Silica Fume: 50 percent by mass, with fly ash or pozzolans not exceeding 25 percent by mass and silica fume not exceeding 10 percent by mass.
5. Total of Fly Ash or Other Pozzolans and Silica Fume: 35 percent by mass with fly ash or pozzolans not exceeding 25 percent by mass and silica fume not exceeding 10 percent by mass.

C. Admixtures: Use admixtures in accordance with manufacturer's written instructions.

1. Use water-reducing, high-range water-reducing, or plasticizing admixture in concrete, as required, for placement and workability.
2. Use water-reducing and -retarding admixture when required by high temperatures, low humidity, or other adverse placement conditions.
3. Use water-reducing admixture in pumped concrete, concrete for heavy-use industrial slabs, concrete for parking structure slabs, and concrete with a w/cm below 0.50.
4. Use corrosion-inhibiting admixture in concrete mixtures where indicated.
5. Use permeability-reducing admixture in concrete mixtures where indicated.

D. Color Pigment: Add color pigment to concrete mixture in accordance with manufacturer's written instructions and to result in hardened concrete color consistent with approved mockup.

2.8 CONCRETE MIXTURES

A. Class A Normal-weight concrete used for footings, grade beams, and tie beams.

1. Exposure Class: ACI 318 (ACI 318M) F0.
2. Minimum Compressive Strength: 4000 psi (27.6 MPa) at 28 days.
3. Maximum w/cm: 0.50.
4. Slump Limit: 4 inches (100 mm), plus or minus 1 inch (25 mm).
5. Slump Flow Limit: 22 inches (550 mm), plus or minus 1.5 inches (40 mm).
6. Air Content:
7. Limit water-soluble, chloride-ion content in hardened concrete to 1.00 percent by weight of cement.

2.9 CONCRETE MIXING

A. Ready-Mixed Concrete: Measure, batch, mix, and deliver concrete in accordance with ASTM C94/C94M and ASTM C1116/C1116M, and furnish batch ticket information.

B. Project-Site Mixing: Measure, batch, and mix concrete materials and concrete in accordance with ASTM C94/C94M. Mix concrete materials in appropriate drum-type batch machine mixer.

1. For mixer capacity of 1 cu. yd. (0.76 cu. m) or smaller, continue mixing at least 1-1/2 minutes, but not more than five minutes after ingredients are in mixer, before any part of batch is released.
2. For mixer capacity larger than 1 cu. yd. (0.76 cu. m), increase mixing time by 15 seconds for each additional 1 cu. yd. (0.76 cu. m).
3. Provide batch ticket for each batch discharged and used in the Work, indicating Project identification name and number, date, mixture type, mixture time, quantity, and amount of water added. Record approximate location of final deposit in structure.

PART 3 - EXECUTION

3.1 EXAMINATION

A. Verification of Conditions:

1. Before placing concrete, verify that installation of concrete forms, accessories, and reinforcement, and embedded items is complete and that required inspections have been performed.
2. Do not proceed until unsatisfactory conditions have been corrected.

3.2 PREPARATION

A. Provide reasonable auxiliary services to accommodate field testing and inspections, acceptable to testing agency, including the following:

1. Daily access to the Work.

2. Incidental labor and facilities necessary to facilitate tests and inspections.
3. Secure space for storage, initial curing, and field curing of test samples, including source of water and continuous electrical power at Project site during site curing period for test samples.
4. Security and protection for test samples and for testing and inspection equipment at Project site.

3.3 INSTALLATION OF EMBEDDED ITEMS

A. Place and secure anchorage devices and other embedded items required for adjoining Work that is attached to or supported by cast-in-place concrete.

1. Use setting drawings, templates, diagrams, instructions, and directions furnished with items to be embedded.
2. Install anchor rods, accurately located, to elevations required and complying with tolerances in Section 7.5 of ANSI/AISC 303.
3. Install reglets to receive waterproofing and to receive through-wall flashings in outer face of concrete frame at exterior walls, where flashing is shown at lintels, shelf angles, and other conditions.

3.4 INSTALLATION OF VAPOR RETARDER

A. Sheet Vapor Retarders: Place, protect, and repair sheet vapor retarder in accordance with ASTM E1643 and manufacturer's written instructions.

1. Install vapor retarder with longest dimension parallel with direction of concrete pour.
2. Face laps away from exposed direction of concrete pour.
3. Lap vapor retarder over footings and grade beams not less than 6 inches (150 mm), sealing vapor retarder to concrete.
4. Lap joints 6 inches (150 mm) and seal with manufacturer's recommended tape.
5. Terminate vapor retarder at the top of floor slabs, grade beams, and pile caps, sealing entire perimeter to floor slabs, grade beams, foundation walls, or pile caps.
6. Seal penetrations in accordance with vapor retarder manufacturer's instructions.
7. Protect vapor retarder during placement of reinforcement and concrete.

    a. Repair damaged areas by patching with vapor retarder material, overlapping damages area by 6 inches (150 mm) on all sides, and sealing to vapor retarder.

B. Bituminous Vapor Retarders: Place, protect, and repair bituminous vapor retarder in accordance with manufacturer's written instructions.

3.5 CONCRETE PLACEMENT

A. Before placing concrete, verify that installation of formwork, reinforcement, embedded items, and vapor retarder is complete and that required inspections are completed.

1. Immediately prior to concrete placement, inspect vapor retarder for damage and deficient installation, and repair defective areas.

2. Provide continuous inspection of vapor retarder during concrete placement and make necessary repairs to damaged areas as Work progresses.

B. Notify Engineer and testing and inspection agencies 24 hours prior to commencement of concrete placement.

C. Do not add water to concrete during delivery, at Project site, or during placement unless approved by Architect in writing, but not to exceed the amount indicated on the concrete delivery ticket.

1. Do not add water to concrete after adding high-range water-reducing admixtures to mixture.

D. Before test sampling and placing concrete, water may be added at Project site, subject to limitations of ACI 301 (ACI 301M), but not to exceed the amount indicated on the concrete delivery ticket.

1. Do not add water to concrete after adding high-range water-reducing admixtures to mixture.

E. Deposit concrete continuously in one layer or in horizontal layers of such thickness that no new concrete is placed on concrete that has hardened enough to cause seams or planes of weakness.

1. If a section cannot be placed continuously, provide construction joints as indicated.
2. Deposit concrete to avoid segregation.
3. Deposit concrete in horizontal layers of depth not to exceed formwork design pressures and in a manner to avoid inclined construction joints.
4. Consolidate placed concrete with mechanical vibrating equipment in accordance with ACI 301 (ACI 301M).

a. Do not use vibrators to transport concrete inside forms.
b. Insert and withdraw vibrators vertically at uniformly spaced locations to rapidly penetrate placed layer and at least 6 inches (150 mm) into preceding layer.
c. Do not insert vibrators into lower layers of concrete that have begun to lose plasticity.
d. At each insertion, limit duration of vibration to time necessary to consolidate concrete, and complete embedment of reinforcement and other embedded items without causing mixture constituents to segregate.

F. Deposit and consolidate concrete for floors and slabs in a continuous operation, within limits of construction joints, until placement of a panel or section is complete.

1. Do not place concrete floors and slabs in a checkerboard sequence.
2. Consolidate concrete during placement operations, so concrete is thoroughly worked around reinforcement and other embedded items and into corners.
3. Maintain reinforcement in position on chairs during concrete placement.
4. Screed slab surfaces with a straightedge and strike off to correct elevations.
5. Level concrete, cut high areas, and fill low areas.
6. Slope surfaces uniformly to drains where required.
7. Begin initial floating using bull floats or darbies to form a uniform and open-textured surface plane, before excess bleedwater appears on the surface.

8. Do not further disturb slab surfaces before starting finishing operations.

3.6 FINISHING FORMED SURFACES

A. As-Cast Surface Finishes:

1. ACI 301 (ACI 301M) Surface Finish SF-1.0: As-cast concrete texture imparted by form-facing material.

    a. Patch voids larger than 1-1/2 inches (38 mm) wide or 1/2 inch (13 mm) deep.
    b. Remove projections larger than 1 inch (25 mm).
    c. Tie holes do not require patching.
    d. Surface Tolerance: ACI 117 (ACI 117M) Class D.
    e. Apply to concrete surfaces not exposed to public view.

2. ACI 301 (ACI 301M) Surface Finish SF-2.0: As-cast concrete texture imparted by form-facing material, arranged in an orderly and symmetrical manner with a minimum of seams.

    a. Patch voids larger than 3/4 inch (19 mm) wide or 1/2 inch (13 mm) deep.
    b. Remove projections larger than 1/4 inch (6 mm).
    c. Patch tie holes.
    d. Surface Tolerance: ACI 117 (ACI 117M) Class B.
    e. Locations: Apply to concrete surfaces exposed to public view, to receive a rubbed finish, or to be covered with a coating or covering material applied directly to concrete.

3. ACI 301 (ACI 301M) Surface Finish SF-3.0:

    a. Patch voids larger than 3/4 inch (19 mm) wide or 1/2 inch (13 mm) deep.
    b. Remove projections larger than 1/8 inch (3 mm).
    c. Patch tie holes.
    d. Surface Tolerance: ACI 117 (ACI 117M) Class A.
    e. Locations: Apply to concrete surfaces exposed to public view, to receive a rubbed finish, or to be covered with a coating or covering material applied directly to concrete.

3.7 INSTALLATION OF MISCELLANEOUS CONCRETE ITEMS

A. Equipment Bases and Foundations:

1. Coordinate sizes and locations of concrete bases with actual equipment provided.
2. Construct concrete bases 4 inches (100 mm) high unless otherwise indicated on Drawings, and extend base not less than 6 inches (150 mm) in each direction beyond the maximum dimensions of supported equipment unless otherwise indicated on Drawings, or unless required for seismic anchor support.
3. Minimum Compressive Strength: 4000 psi (27.6 MPa) at 28 days.
4. For supported equipment, install epoxy-coated anchor bolts that extend through concrete base and anchor into structural concrete substrate.

5. Prior to pouring concrete, place and secure anchorage devices.

    a. Use setting drawings, templates, diagrams, instructions, and directions furnished with items to be embedded.
    b. Cast anchor-bolt insert into bases.
    c. Install anchor bolts to elevations required for proper attachment to supported equipment.

3.8 CONCRETE CURING

A. Protect freshly placed concrete from premature drying and excessive cold or hot temperatures.

1. Comply with ACI 301 (ACI 301M) and ACI 306.1 for cold weather protection during curing.
2. Comply with ACI 301 (ACI 301M) and ACI 305.1 (ACI 305.1M) for hot-weather protection during curing.
3. Maintain moisture loss no more than 0.2 lb/sq. ft. x h (1 kg/sq. m x h), calculated in accordance with ACI 305.1, before and during finishing operations.

B. Curing Formed Surfaces: Comply with ACI 308.1 (ACI 308.1M) as follows:

1. Cure formed concrete surfaces, including underside of beams, supported slabs, and other similar surfaces.
2. Cure concrete containing color pigments in accordance with color pigment manufacturer's instructions.
3. If forms remain during curing period, moist cure after loosening forms.
4. If removing forms before end of curing period, continue curing for remainder of curing period, as follows:

    a. Continuous Fogging: Maintain standing water on concrete surface until final setting of concrete.
    b. Continuous Sprinkling: Maintain concrete surface continuously wet.
    c. Absorptive Cover: Pre-dampen absorptive material before application; apply additional water to absorptive material to maintain concrete surface continuously wet.
    d. Water-Retention Sheeting Materials: Cover exposed concrete surfaces with sheeting material, taping, or lapping seams.
    e. Membrane-Forming Curing Compound: Apply uniformly in continuous operation by power spray or roller in accordance with manufacturer's written instructions.

        1) Recoat areas subject to heavy rainfall within three hours after initial application.
        2) Maintain continuity of coating and repair damage during curing period.

C. Curing Unformed Surfaces: Comply with ACI 308.1 (ACI 308.1M) as follows:

1. Begin curing immediately after finishing concrete.
2. Interior Concrete Floors:

a. Floors to Receive Floor Coverings Specified in Other Sections: Contractor has option of the following:

1) Absorptive Cover: As soon as concrete has sufficient set to permit application without marring concrete surface, install prewetted absorptive cover over entire area of floor.

a) Lap edges and ends of absorptive cover not less than 12 inches (300 mm).
b) Maintain absorptive cover water saturated, and in place, for duration of curing period, but not less than seven days.

2) Moisture-Retaining-Cover Curing: Cover concrete surfaces with moisture-retaining cover for curing concrete, placed in widest practicable width, with sides and ends lapped at least 12 inches (300 mm), and sealed by waterproof tape or adhesive.

a) Immediately repair any holes or tears during curing period, using cover material and waterproof tape.
b) Cure for not less than seven days.

3) Ponding or Continuous Sprinkling of Water: Maintain concrete surfaces continuously wet for not less than seven days, utilizing one, or a combination of, the following:

a) Water.
b) Continuous water-fog spray.

b. Floors to Receive Penetrating Liquid Floor Treatments: Contractor has option of the following:

1) Absorptive Cover: As soon as concrete has sufficient set to permit application without marring concrete surface, install prewetted absorptive cover over entire area of floor.

a) Lap edges and ends of absorptive cover not less than 12 inches (300 mm).
b) Maintain absorptive cover water saturated, and in place, for duration of curing period, but not less than seven days.

2) Moisture-Retaining-Cover Curing: Cover concrete surfaces with moisture-retaining cover for curing concrete, placed in widest practicable width, with sides and ends lapped at least 12 inches (300 mm), and sealed by waterproof tape or adhesive.

a) Immediately repair any holes or tears during curing period, using cover material and waterproof tape.
b) Cure for not less than seven days.

3) Ponding or Continuous Sprinkling of Water: Maintain concrete surfaces continuously wet for not less than seven days, utilizing one, or a combination of, the following:

a) Water.
b) Continuous water-fog spray.

c. Floors to Receive Polished Finish: Contractor has option of the following:

1) Absorptive Cover: As soon as concrete has sufficient set to permit application without marring concrete surface, install prewetted absorptive cover over entire area of floor.

a) Lap edges and ends of absorptive cover not less than 12 inches (300 mm).
b) Maintain absorptive cover water saturated, and in place, for duration of curing period, but not less than seven days.

2) Ponding or Continuous Sprinkling of Water: Maintain concrete surfaces continuously wet for not less than seven days, utilizing one, or a combination of, the following:

a) Water.
b) Continuous water-fog spray.

d. Floors to Receive Chemical Stain:

1) As soon as concrete has sufficient set to permit application without marring concrete surface, install curing paper over entire area of floor.
2) Install curing paper square to building lines, without wrinkles, and in a single length without end joints.
3) Butt sides of curing paper tight; do not overlap sides of curing paper.
4) Leave curing paper in place for duration of curing period, but not less than 28 days.

e. Floors to Receive Urethane Flooring:

1) As soon as concrete has sufficient set to permit application without marring concrete surface, install prewetted absorptive cover over entire area of floor.
2) Rewet absorptive cover, and cover immediately with polyethylene moisture-retaining cover with edges lapped 6 inches (150 mm) and sealed in place.
3) Secure polyethylene moisture-retaining cover in place to prohibit air from circulating under polyethylene moisture-retaining cover.
4) Leave absorptive cover and polyethylene moisture-retaining cover in place for duration of curing period, but not less than 28 days.

f. Floors to Receive Curing Compound:

1) Apply uniformly in continuous operation by power spray or roller in accordance with manufacturer's written instructions.

2) Recoat areas subjected to heavy rainfall within three hours after initial application.
3) Maintain continuity of coating, and repair damage during curing period.
4) Removal: After curing period has elapsed, remove curing compound without damaging concrete surfaces by method recommended by curing compound manufacturer unless manufacturer certifies curing compound does not interfere with bonding of floor covering used on Project.

g. Floors to Receive Curing and Sealing Compound:

1) Apply uniformly to floors and slabs indicated in a continuous operation by power spray or roller in accordance with manufacturer's written instructions.
2) Recoat areas subjected to heavy rainfall within three hours after initial application.
3) Repeat process 24 hours later, and apply a second coat. Maintain continuity of coating, and repair damage during curing period.

3.9 TOLERANCES

A. Conform to ACI 117 (ACI 117M).

3.10 JOINT FILLING

A. Prepare, clean, and install joint filler in accordance with manufacturer's written instructions.

1. Defer joint filling until concrete has aged at least one month(s).
2. Do not fill joints until construction traffic has permanently ceased.

B. Remove dirt, debris, saw cuttings, curing compounds, and sealers from joints; leave contact faces of joints clean and dry.

C. Install semirigid joint filler full depth in saw-cut joints and at least 2 inches (50 mm) deep in formed joints.

D. Overfill joint, and trim joint filler flush with top of joint after hardening.

3.11 CONCRETE SURFACE REPAIRS

A. Defective Concrete:

1. Repair and patch defective areas when approved by Architect.
2. Remove and replace concrete that cannot be repaired and patched to Architect's approval.

B. Patching Mortar: Mix dry-pack patching mortar, consisting of 1 part portland cement to 2-1/2 parts fine aggregate passing a No. 16 (1.18-mm) sieve, using only enough water for handling and placing.

C. Repairing Formed Surfaces: Surface defects include color and texture irregularities, cracks, spalls, air bubbles, honeycombs, rock pockets, fins and other projections on the surface, and stains and other discolorations that cannot be removed by cleaning.

1. Immediately after form removal, cut out honeycombs, rock pockets, and voids more than 1/2 inch (13 mm) in any dimension to solid concrete.

    a. Limit cut depth to 3/4 inch (19 mm).
    b. Make edges of cuts perpendicular to concrete surface.
    c. Clean, dampen with water, and brush-coat holes and voids with bonding agent.
    d. Fill and compact with patching mortar before bonding agent has dried.
    e. Fill form-tie voids with patching mortar or cone plugs secured in place with bonding agent.

2. Repair defects on surfaces exposed to view by blending white portland cement and standard portland cement, so that, when dry, patching mortar matches surrounding color.

    a. Patch a test area at inconspicuous locations to verify mixture and color match before proceeding with patching.
    b. Compact mortar in place and strike off slightly higher than surrounding surface.

3. Repair defects on concealed formed surfaces that will affect concrete's durability and structural performance as determined by Architect.

D. Repairing Unformed Surfaces:

1. Test unformed surfaces, such as floors and slabs, for finish, and verify surface tolerances specified for each surface.

    a. Correct low and high areas.
    b. Test surfaces sloped to drain for trueness of slope and smoothness; use a sloped template.

2. Repair finished surfaces containing surface defects, including spalls, popouts, honeycombs, rock pockets, crazing, and cracks in excess of 0.01 inch (0.25 mm) wide or that penetrate to reinforcement or completely through unreinforced sections regardless of width, and other objectionable conditions.
3. After concrete has cured at least 14 days, correct high areas by grinding.
4. Correct localized low areas during, or immediately after, completing surface-finishing operations by cutting out low areas and replacing with patching mortar.

    a. Finish repaired areas to blend into adjacent concrete.

5. Correct other low areas scheduled to receive floor coverings with a repair underlayment.

    a. Prepare, mix, and apply repair underlayment and primer in accordance with manufacturer's written instructions to produce a smooth, uniform, plane, and level surface.
    b. Feather edges to match adjacent floor elevations.

6. Correct other low areas scheduled to remain exposed with repair topping.

a. Cut out low areas to ensure a minimum repair topping depth of 1/4 inch (6 mm) to match adjacent floor elevations.
b. Prepare, mix, and apply repair topping and primer in accordance with manufacturer's written instructions to produce a smooth, uniform, plane, and level surface.

7. Repair defective areas, except random cracks and single holes 1 inch (25 mm) or less in diameter, by cutting out and replacing with fresh concrete.

a. Remove defective areas with clean, square cuts, and expose steel reinforcement with at least a 3/4-inch (19-mm) clearance all around.
b. Dampen concrete surfaces in contact with patching concrete and apply bonding agent.
c. Mix patching concrete of same materials and mixture as original concrete, except without coarse aggregate.
d. Place, compact, and finish to blend with adjacent finished concrete.
e. Cure in same manner as adjacent concrete.

8. Repair random cracks and single holes 1 inch (25 mm) or less in diameter with patching mortar.

a. Groove top of cracks and cut out holes to sound concrete, and clean off dust, dirt, and loose particles.
b. Dampen cleaned concrete surfaces and apply bonding agent.
c. Place patching mortar before bonding agent has dried.
d. Compact patching mortar and finish to match adjacent concrete.
e. Keep patched area continuously moist for at least 72 hours.

E. Perform structural repairs of concrete, subject to Architect's approval, using epoxy adhesive and patching mortar.

F. Repair materials and installation not specified above may be used, subject to Architect's approval.

3.12 FIELD QUALITY CONTROL

A. Special Inspections: Contractor will engage a special inspector to perform field tests and inspections and prepare testing and inspection reports.

B. Testing Agency: Engage a qualified testing and inspecting agency to perform tests and inspections and to submit reports.

1. Testing agency to be responsible for providing curing container for composite samples on Site and verifying that field-cured composite samples are cured in accordance with ASTM C31/C31M.
2. Testing agency to immediately report to Architect, Contractor, and concrete manufacturer any failure of Work to comply with Contract Documents.
3. Testing agency to report results of tests and inspections, in writing, to Owner, Architect, Contractor, and concrete manufacturer within 48 hours of inspections and tests.

a. Test reports to include reporting requirements of ASTM C31/C31M, ASTM C39/C39M, and ACI 301, including the following as applicable to each test and inspection:

1) Project name.
2) Name of testing agency.
3) Names and certification numbers of field and laboratory technicians performing inspections and testing.
4) Name of concrete manufacturer.
5) Date and time of inspection, sampling, and field testing.
6) Date and time of concrete placement.
7) Location in Work of concrete represented by samples.
8) Date and time sample was obtained.
9) Truck and batch ticket numbers.
10) Design compressive strength at 28 days.
11) Concrete mixture designation, proportions, and materials.
12) Field test results.
13) Information on storage and curing of samples before testing, including curing method and maximum and minimum temperatures during initial curing period.
14) Type of fracture and compressive break strengths at seven days and 28 days.

C. Batch Tickets: For each load delivered, submit three copies of batch delivery ticket to testing agency, indicating quantity, mix identification, admixtures, design strength, aggregate size, design air content, design slump at time of batching, and amount of water that can be added at Project site.

D. Inspections:
1. Verification of use of required design mixture.
2. Concrete placement, including conveying and depositing.
3. Curing procedures and maintenance of curing temperature.
4. Verification of concrete strength before removal of shores and forms from beams and slabs.
5. Batch Plant Inspections: On a random basis, as determined by Architect.

E. Concrete Tests: Testing of composite samples of fresh concrete obtained in accordance with ASTM C 172/C 172M to be performed in accordance with the following requirements:

1. Testing Frequency: Obtain one composite sample for each day's pour of each concrete mixture exceeding 5 cu. yd. (4 cu. m), but less than 25 cu. yd. (19 cu. m), plus one set for each additional 50 cu. yd. (38 cu. m) or fraction thereof.

a. When frequency of testing provides fewer than five compressive-strength tests for each concrete mixture, testing to be conducted from at least five randomly selected batches or from each batch if fewer than five are used.

2. Slump: ASTM C143/C143M:

a. One test at point of placement for each composite sample, but not less than one test for each day's pour of each concrete mixture.
b. Perform additional tests when concrete consistency appears to change.

3. Slump Flow: ASTM C1611/C1611M:

    a. One test at point of placement for each composite sample, but not less than one test for each day's pour of each concrete mixture.
    b. Perform additional tests when concrete consistency appears to change.

4. Air Content: ASTM C231/C231M pressure method, for normal-weight concrete; ASTM C173/C173M volumetric method, for structural lightweight concrete.

    a. One test for each composite sample, but not less than one test for each day's pour of each concrete mixture.

5. Concrete Temperature: ASTM C1064/C1064M:

    a. One test hourly when air temperature is 40 deg F (4.4 deg C) and below or 80 deg F (27 deg C) and above, and one test for each composite sample.

6. Unit Weight: ASTM C567/C567M fresh unit weight of structural lightweight concrete.

    a. One test for each composite sample, but not less than one test for each day's pour of each concrete mixture.

7. Compression Test Specimens: ASTM C31/C31M:

    a. Cast and laboratory cure two sets of three 6-inch (150 mm) by 12-inch (300 mm) or 4-inch (100 mm) by 8-inch (200 mm) cylinder specimens for each composite sample.
    b. Cast, initial cure, and field cure two sets of four standard cylinder specimens for each composite sample.

8. Compressive-Strength Tests: ASTM C39/C39M.

    a. Test one set of two laboratory-cured specimens at seven days and one set of two specimens at 28 days.
    b. Test one set of two field-cured specimens at seven days and one set of two specimens at 28 days.
    c. A compressive-strength test to be the average compressive strength from a set of two specimens obtained from same composite sample and tested at age indicated.

9. When strength of field-cured cylinders is less than 85 percent of companion laboratory-cured cylinders, Contractor to evaluate operations and provide corrective procedures for protecting and curing in-place concrete.
10. Strength of each concrete mixture will be satisfactory if every average of any three consecutive compressive-strength tests equals or exceeds specified compressive strength, and no compressive-strength test value falls below specified compressive strength by more than 500 psi (3.4 MPa) if specified compressive strength is 5000 psi (34.5 MPa), or no compressive strength test value is less than 10 percent of specified compressive strength if specified compressive strength is greater than 5000 psi (34.5 MPa).
11. Nondestructive Testing: Impact hammer, sonoscope, or other nondestructive device may be permitted by Architect but will not be used as sole basis for approval or rejection of concrete.

F. Measure floor and slab flatness and levelness in accordance with ASTM E1155 (ASTM E1155M) within 24 hours of completion of floor finishing and promptly report test results to Architect.

3.13 PROTECTION

A. Protect concrete surfaces as follows:

1. Protect from petroleum stains.
2. Diaper hydraulic equipment used over concrete surfaces.
3. Prohibit vehicles from interior concrete slabs.
4. Prohibit use of pipe-cutting machinery over concrete surfaces.
5. Prohibit placement of steel items on concrete surfaces.
6. Prohibit use of acids or acidic detergents over concrete surfaces.
7. Protect liquid floor treatment from damage and wear during the remainder of construction period. Use protective methods and materials, including temporary covering, recommended in writing by liquid floor treatments installer.
8. Protect concrete surfaces scheduled to receive surface hardener or polished concrete finish using Floor Slab Protective Covering.

END OF SECTION 033000

SECTION 230130.52 - EXISTING HVAC AIR DISTRIBUTION SYSTEM CLEANING

PART 1 - GENERAL

1.1 SUMMARY

A. Section includes cleaning existing HVAC air-distribution equipment, ducts, plenums, and system components.

B. Related Requirements:

1. Section 233113.00 "Metal Ducts" for cleaning newly installed metal ducts.
2. Section 230593.00 "Testing, Adjusting, Balancing for HVAC" for system flow documentation before cleaning and balancing and following cleaning and restoration.
3. Section 233300.00 "Air Duct Accessories" for restoration of opened ducts and plenums with access doors.

1.2 DEFINITIONS

A. ACAC: American Council for Accredited Certification.

B. AIHA-LAP: American Industrial Hygiene Association Lab Accreditation Program

C. ASCS: Air systems cleaning specialist.

D. CESB: Council of Engineering and Scientific Specialty Boards.

E. CMI: Certified Microbial Investigator.

F. CMC: Certified Microbial Consultant.

G. CMR: Certified Microbial Remediator.

H. CMRS: Certified Microbial Remediation Supervisor.

I. EMLAP: Environmental Microbiology Laboratory Accreditation Program.

J. IEP: Indoor Environmental Professional.

K. IICRC: Institute of Inspection, Cleaning, and Restoration Certification.

L. NADCA: National Air Duct Cleaners Association.

1.3 ACTION SUBMITTALS

A. Product Data:

1. Cleaning agents
2. Antimicrobial surface treatments "sealant" for sustainable design submittal purposes.

1.4 INFORMATIONAL SUBMITTALS

A. Qualification Data:

1. For an ASCS.
2. For an IEP.
3. For a CMR and a CMRS.

B. Field Quality-Control Reports:

1. Project's existing conditions.
2. Evaluations and recommendations, including cleanliness verification.
3. Strategies and procedures plan.

1.5 CLOSEOUT SUBMITTALS

A. Post-Project report.

1.6 QUALITY ASSURANCE

A. ASCS Qualifications: A certified member of NADCA.

1. Certification: Employ an ASCS certified by NADCA on a full-time basis.
2. Supervisor Qualifications: Certified as an ASCS by NADCA.

B. IEP Qualifications: CMI who is certified by ACAC and accredited by CESB.

C. IEP Qualifications: CMC who is certified by ACAC and accredited by CESB.

D. CMR Qualifications: Certified by ACAC and accredited by CESB.

E. CMRS Qualifications: Certified by ACAC and accredited by CESB.

F. UL Compliance: Comply with UL 181 and UL 181A for fibrous-glass ducts.

PART 2 - PRODUCTS

2.1 HVAC CLEANING AGENTS

A. Description:

1. Formulated for each specific soiled coil condition that needs remedy.
2. Will not corrode or tarnish aluminum, copper, or other metals.

2.2 ANTIMICROBIAL SURFACE TREATMENT

A. Description: Specific product selected shall be as recommended by the IEP based on the specific antimicrobial needs of the specific Project conditions.

1. Formulated to kill and inhibit growth of microorganisms.
2. EPA-registered for use in HVAC systems and for the specific application in which it will be used.
3. Have no residual action after drying, with zero VOC off-gassing.
4. OSHA compliant.
5. Treatment shall dry clear to allow continued visual observation of the treated surface.

PART 3 - EXECUTION

3.1 PREPARATION

A. Inspect HVAC air-distribution equipment, ducts, plenums, and system components to determine appropriate methods, tools, and equipment required for performance of the Work.

B. Perform "Project Evaluation and Recommendation" according to NADCA ACR.

C. Cleaning Plan: Prepare a written plan for air-distribution system cleaning that includes strategies and step-by-step procedures. At a minimum, include the following:

1. Supervisor contact information.
2. Work schedule, including location, times, and impact on occupied areas.
3. Methods and materials planned for each HVAC component type.
4. Required support from other trades.
5. Equipment and material storage requirements.
6. Exhaust equipment setup locations.

D. Existing Conditions Report: Prepare a written report that documents existing conditions of the systems and equipment. Include documentation of existing conditions, including inspection results, photo images, laboratory results, and interpretations of the laboratory results by an IEP.

1. Prepare written report listing conditions detrimental to performance of the Work.

E. Proceed with work only after conditions detrimental to performance of the Work have been corrected.

F. Use the existing service openings, as required for proper cleaning, at various points of the HVAC system for physical and mechanical entry and for inspection.

G. Comply with NADCA ACR, "Guidelines for Constructing Service Openings in HVAC Systems" Section.

H. Mark the position of manual volume dampers and air-directional mechanical devices inside the system prior to cleaning.

3.2 CLEANING

A. Comply with NADCA ACR, including items identified as "recommended," "advised," and "suggested."

B. Perform electrical lockout and tagout according to Owner's standards or authorities having jurisdiction.

C. Remove non-adhered substances and deposits from within the HVAC system.

D. Complete cleaning in accordance with Owner-Contractor agreed-upon scope of work.

E. Systems and Components to Be Cleaned: All air-moving and -distribution equipment.

F. Systems and Components to Be Cleaned:

1. Air devices for supply and return air.
2. Air-terminal units and connections.
    a. Fan coil units.
    b. Unit ventilators.
    c. Flexible connectors.

3. Ductwork:

    a. Supply-air ducts, including turning vanes and reheat coils, to the air-handling unit.
    b. Return-air ducts to the air-handling unit.
    c. Exhaust-air ducts.
    d. Transfer ducts.

4. Casings.
5. Duct-mounted coils.
6. Air-Handling Units:

    a. Interior surfaces of the unit casing.
    b. Coil surfaces compartment.
    c. Condensate drain pans.
    d. Fans, fan blades, and fan housings.

7. Exhaust fans and power ventilators.
8. Filters and filter housings.
9. Gravity ventilators.
10. Air-to-air heat exchangers.

G. Collect debris removed during cleaning. Ensure that debris is not dispersed outside the HVAC system during the cleaning process.

H. Particulate Collection:

1. For particulate collection equipment, include adequate filtration to contain debris removed. Locate equipment downwind and away from all air intakes and other points of entry into the building.

2. HEPA filtration with 99.97 percent collection efficiency for particles sized 0.3 micrometer or larger shall be used where the particulate collection equipment is exhausting inside the building,

I. Control odors and mist vapors during the cleaning and restoration process.

J. Mark the position of manual volume dampers and air-directional mechanical devices inside the system prior to cleaning. Restore them to their marked position on completion of cleaning.

K. System components shall be cleaned so that all HVAC system components are visibly clean. On completion, all components must be returned to those settings recorded just prior to cleaning operations.

L. Clean all air-distribution devices, registers, grilles, and diffusers.

M. Clean non-adhered substance deposits according to NADCA ACR and the following:

1. Clean air-handling units, airstream surfaces, components, condensate collectors, and drains.
2. Ensure that a suitable operative drainage system is in place prior to beginning wash-down procedures.
3. Clean evaporator coils, reheat coils, and other airstream components.

N. Air-Distribution Systems:

1. Create service openings in the HVAC system as necessary to accommodate cleaning.
2. Mechanically clean air-distribution systems specified to remove all visible contaminants, so that the systems are capable of passing the HVAC System Cleanliness Tests (see NADCA ACR).

O. Debris removed from the HVAC system shall be disposed of according to applicable Federal, state, and local requirements.

P. Mechanical Cleaning Methodology:

1. Source-Removal Cleaning Methods: The HVAC system shall be cleaned using source-removal mechanical cleaning methods designed to extract contaminants from within the HVAC system and to safely remove these contaminants from the facility. No cleaning method, or combination of methods, shall be used that could potentially damage components of the HVAC system or negatively alter the integrity of the system.

    a. Use continuously operating vacuum-collection devices to keep each section being cleaned under negative pressure.
    b. Cleaning methods that require mechanical agitation devices to dislodge debris that is adhered to interior surfaces of HVAC system components shall be equipped to safely remove these devices. Cleaning methods shall not damage the integrity of HVAC system components or damage porous surface materials, such as duct and plenum liners.

2. Cleaning Mineral-Fiber Insulation Components:

a. Fibrous-glass thermal or acoustical insulation elements present in equipment or ductwork shall be thoroughly cleaned with HEPA vacuuming equipment while the HVAC system is under constant negative pressure and shall not be permitted to get wet according to NADCA ACR.
b. Cleaning methods used shall not cause damage to fibrous-glass components and will render the system capable of passing the HVAC System Cleanliness Tests (see NADCA ACR).
c. Fibrous materials that become wet shall be discarded and replaced.

Q. Application of Antimicrobial Treatment:

1. Apply antimicrobial agents and coatings if active fungal growth is determined by the IEP to be at Condition 2 or Condition 3 status according to IICRC S520, as analyzed by a laboratory accredited by AIHA-LAP with an EMLAP certificate, and with results interpreted by an IEP. Apply antimicrobial agents and coatings according to manufacturer's written recommendations and EPA registration listing after the removal of surface deposits and debris.
2. Apply antimicrobial treatments and coatings after the system is rendered clean.
3. Apply antimicrobial agents and coatings directly onto surfaces of interior ductwork.
4. Microbial remediation shall be performed by a qualified CMR and CMRS.

3.3 CLEANLINESS VERIFICATION

A. Verify cleanliness according to NADCA ACR, "Verification of HVAC System Cleanliness" Section.

B. Verify HVAC system cleanliness after mechanical cleaning and before applying any treatment or introducing any treatment-related substance to the HVAC system, including biocidal agents and coatings.

C. Surface-Cleaning Verification: Perform visual inspection for cleanliness. If no contaminants are evident through visual inspection, the HVAC system shall be considered clean. If visible contaminants are evident through visual inspection, those portions of the system where contaminants are visible shall be re-cleaned and subjected to re-inspection for cleanliness.

D. Prepare a written cleanliness verification report. At a minimum, include the following:

1. Written documentation of the success of the cleaning.
2. Site inspection reports, initialed by supervisor, including notation on areas of inspection, as verified through visual inspection.
3. Surface comparison test results if required.
4. Gravimetric analysis (nonporous surfaces only).
5. System areas found to be damaged.

3.4 RESTORATION

A. Restore and repair HVAC air-distribution equipment, ducts, plenums, and components according to NADCA ACR, "Restoration and Repair of Mechanical Systems" Section.

B. Restore service openings capable of future reopening. Comply with requirements in Section 233113 "Metal Ducts."

C. Replace fibrous-glass materials that cannot be restored by cleaning or resurfacing. Comply with requirements in Section 233113 "Metal Ducts" and Section 233116 "Nonmetal Ducts."

D. Replace damaged insulation according to Section 230713 "Duct Insulation."

E. Ensure that closures do not hinder or alter airflow.

F. New closure materials, including insulation, shall match opened materials and shall have removable closure panels fitted with gaskets and fasteners.

G. Restore manual volume dampers and air-directional mechanical devices inside the system to their marked position on completion of cleaning.

H. Measure air flows through air-distribution system.

I. Measure static-pressure differential across each coil.

3.5 PROJECT CLOSEOUT

A. Post-Project Report:

1. Post-cleaning laboratory results if any.
2. Post-cleaning photo images.
3. Post-cleaning verification summary.

B. Drawings:

1. Deviations of existing system from Owner's record drawings.
2. Location of service openings.

END OF SECTION 230130.52

SECTION 230529 - HANGERS AND SUPPORTS FOR HVAC PIPING AND EQUIPMENT

PART 1 - GENERAL

1.1 RELATED DOCUMENTS

A. Drawings and general provisions of the Contract, including General and Supplementary Conditions and Division 01 Specification Sections, apply to this Section.

1.2 SUMMARY

A. Section Includes:

1. Metal pipe hangers and supports.
2. Metal framing systems.
3. Thermal-hanger shield inserts.
4. Fastener systems.
5. Pipe stands.
6. Equipment stands.
7. Equipment supports.

B. Related Requirements:
1. Section 230548 "Vibration and Seismic Controls for HVAC" for vibration isolation devices.
2. Section 233113 "Metal Ducts" for duct hangers and supports.

1.3 ACTION SUBMITTALS

A. Product Data: For each type of product.

B. Shop Drawings: Signed and sealed by a qualified professional engineer. Show fabrication and installation details and include calculations for the following; include Product Data for components:

1. Trapeze pipe hangers.
2. Metal framing systems.
3. Pipe stands.
4. Equipment supports.

C. Delegated-Design Submittal: For trapeze hangers indicated to comply with performance requirements and design criteria, including analysis data signed and sealed by the qualified professional engineer responsible for their preparation.

1. Detail fabrication and assembly of trapeze hangers.
2. Include design calculations for designing trapeze hangers.

1.4 INFORMATIONAL SUBMITTALS

A. Welding certificates.

1.5 QUALITY ASSURANCE

A. Structural-Steel Welding Qualifications: Qualify procedures and personnel according to AWS D1.1/D1.1M, "Structural Welding Code - Steel."

B. Pipe Welding Qualifications: Qualify procedures and operators according to ASME Boiler and Pressure Vessel Code, Section IX.

PART 2 - PRODUCTS

2.1 PERFORMANCE REQUIREMENTS

A. Delegated Design: Engage a qualified professional engineer to design trapeze pipe hangers and equipment supports.

B. Structural Performance: Hangers and supports for HVAC piping and equipment shall withstand the effects of gravity loads and stresses within limits and under conditions indicated according to ASCE/SEI 7.

1. Design supports for multiple pipes, including pipe stands, capable of supporting combined weight of supported systems, system contents, and test water.
2. Design equipment supports capable of supporting combined operating weight of supported equipment and connected systems and components.
3. Design seismic-restraint hangers and supports for piping and equipment and obtain approval from authorities having jurisdiction.

2.2 METAL PIPE HANGERS AND SUPPORTS

A. Carbon-Steel Pipe Hangers and Supports:

1. Description: MSS SP-58, Types 1 through 58, factory-fabricated components.
2. Galvanized Metallic Coatings: Pregalvanized, hot-dip galvanized, or electro-galvanized.
3. Padded Hangers: Hanger with fiberglass or other pipe insulation pad or cushion to support bearing surface of piping.
4. Hanger Rods: Continuous-thread rod, nuts, and washer made of stainless steel.

B. Stainless Steel Pipe Hangers and Supports:

1. Description: MSS SP-58, Types 1 through 58, factory-fabricated components.
2. Padded Hangers: Hanger with fiberglass or other pipe insulation pad or cushion to support bearing surface of piping.
3. Hanger Rods: Continuous-thread rod, nuts, and washer made of stainless steel.

C. Copper Pipe and Tube Hangers:

1. Description: MSS SP-58, Types 1 through 58, copper-plated steel, factory-fabricated components.
2. Hanger Rods: Continuous-thread rod, nuts, and washer made of copper-plated steel.

2.3 TRAPEZE PIPE HANGERS

Trapeze pipe hanger in "Description" Paragraph below requires calculating and detailing at each use.

A. Description: MSS SP-58, Type 59, shop- or field-fabricated pipe-support assembly made from structural carbon-steel shapes with MSS SP-58 carbon-steel hanger rods, nuts, saddles, and U-bolts.

2.4 THERMAL-HANGER SHIELD INSERTS

A. Insulation-Insert Material for Cold Piping: ASTM C552, Type II cellular glass with 100-psi (688-kPa) or ASTM C591, Type VI, Grade 1 polyisocyanurate with 125-psi (862-kPa) minimum compressive strength and vapor barrier.

B. For Trapeze or Clamped Systems: Insert and shield shall cover entire circumference of pipe.

C. For Clevis or Band Hangers: Insert and shield shall cover lower 180 degrees of pipe.

D. Insert Length: Extend 2 inches (50 mm) beyond sheet metal shield for piping operating below ambient air temperature.

2.5 FASTENER SYSTEMS

A. Powder-Actuated Fasteners: Threaded-steel stud, for use in hardened portland cement concrete with pull-out, tension, and shear capacities appropriate for supported loads and building materials where used.

B. Mechanical-Expansion Anchors: Insert-wedge-type anchors for use in hardened portland cement concrete; with pull-out, tension, and shear capacities appropriate for supported loads and building materials where used.
1. Indoor Applications: stainless steel.
2. Outdoor Applications: Stainless steel.

2.6 EQUIPMENT SUPPORTS

A. Description: Welded, shop- or field-fabricated equipment support made from structural carbon-steel shapes.

2.7 MATERIALS

A. Aluminum: ASTM B221 (ASTM B221M).

B. Carbon Steel: ASTM A1011/A1011M.

C. Structural Steel: ASTM A36/A36M, carbon-steel plates, shapes, and bars; galvanized.

D. Stainless Steel: ASTM A240/A240M.

E. Threaded Rods: Continuously threaded. Zinc-plated or galvanized steel for indoor applications and stainless steel for outdoor applications. Mating nuts and washers of similar materials as rods.

F. Grout: ASTM C1107/C1107M, factory-mixed and -packaged, dry, hydraulic-cement, nonshrink and nonmetallic grout; suitable for interior and exterior applications.

1. Properties: Nonstaining, noncorrosive, and nongaseous.
2. Design Mix: 5000-psi (34.5-MPa), 28-day compressive strength.

PART 3 - EXECUTION

3.1 APPLICATION

A. Strength of Support Assemblies: Where not indicated, select sizes of components so strength will be adequate to carry present and future static loads within specified loading limits. Minimum static design load used for strength determination shall be weight of supported components plus 200 lb (90 kg).

3.2 HANGER AND SUPPORT INSTALLATION

A. Metal Pipe-Hanger Installation: Comply with MSS SP-58. Install hangers, supports, clamps, and attachments as required to properly support piping from the building structure.

B. Metal Trapeze Pipe-Hanger Installation: Comply with MSS SP-58. Arrange for grouping of parallel runs of horizontal piping, and support together on field-fabricated trapeze pipe hangers.

1. Pipes of Various Sizes: Support together and space trapezes for smallest pipe size or install intermediate supports for smaller diameter pipes as specified for individual pipe hangers.
2. Field fabricate from ASTM A36/A36M, carbon-steel shapes selected for loads being supported. Weld steel according to AWS D1.1/D1.1M.

C. Thermal-Hanger Shield Installation: Install in pipe hanger or shield for insulated piping.

D. Fastener System Installation:

1. Install powder-actuated fasteners for use in lightweight concrete or concrete slabs less than 4 inches (100 mm) thick in concrete after concrete is placed and completely cured. Use operators that are licensed by powder-actuated tool manufacturer. Install fasteners according to powder-actuated tool manufacturer's operating manual.
2. Install mechanical-expansion anchors in concrete after concrete is placed and completely cured. Install fasteners according to manufacturer's written instructions.

E. Install hangers and supports complete with necessary attachments, inserts, bolts, rods, nuts, washers, and other accessories.

F. Equipment Support Installation: Fabricate from welded-structural-steel shapes.

G. Install hangers and supports to allow controlled thermal and seismic movement of piping systems, to permit freedom of movement between pipe anchors, and to facilitate action of expansion joints, expansion loops, expansion bends, and similar units.

H. Install lateral bracing with pipe hangers and supports to prevent swaying.

I. Install building attachments within concrete slabs or attach to structural steel. Install additional attachments at concentrated loads, including valves, flanges, and strainers, NPS 2-1/2 (DN 65) and larger and at changes in direction of piping. Install concrete inserts before concrete is placed; fasten inserts to forms and install reinforcing bars through openings at top of inserts.

J. Load Distribution: Install hangers and supports so that piping live and dead loads and stresses from movement will not be transmitted to connected equipment.

K. Pipe Slopes: Install hangers and supports to provide indicated pipe slopes and to not exceed maximum pipe deflections allowed by ASME B31.9 for building services piping.

L. Insulated Piping:

1. Attach clamps and spacers to piping.

    a. Piping Operating above Ambient Air Temperature: Clamp may project through insulation.
    b. Piping Operating below Ambient Air Temperature: Use thermal-hanger shield insert with clamp sized to match OD of insert.
    c. Do not exceed pipe stress limits allowed by ASME B31.9 for building services piping.

2. Install MSS SP-58, Type 39, protection saddles if insulation without vapor barrier is indicated. Fill interior voids with insulation that matches adjoining insulation.

    a. Option: Thermal-hanger shield inserts may be used. Include steel weight-distribution plate for pipe NPS 4 (DN 100) and larger if pipe is installed on rollers.

3. Install MSS SP-58, Type 40, protective shields on cold piping with vapor barrier. Shields shall span an arc of 180 degrees.

    a. Option: Thermal-hanger shield inserts may be used. Include steel weight-distribution plate for pipe NPS 4 (DN 100) and larger if pipe is installed on rollers.

4. Shield Dimensions for Pipe: Not less than the following:

    a. NPS 1/4 to NPS 3-1/2 (DN 8 to DN 90): 12 inches (305 mm) long and 0.048 inch (1.22 mm) thick.
    b. NPS 4 (DN 100): 12 inches (305 mm) long and 0.06 inch (1.52 mm) thick.

c. NPS 5 and NPS 6 (DN 125 and DN 150): 18 inches (457 mm) long and 0.06 inch (1.52 mm) thick.
d. NPS 8 to NPS 14 (DN 200 to DN 350): 24 inches (610 mm) long and 0.075 inch (1.91 mm) thick.
e. NPS 16 to NPS 24 (DN 400 to DN 600): 24 inches (610 mm) long and 0.105 inch (2.67 mm) thick.

5. Pipes NPS 8 (DN 200) and Larger: Include wood or reinforced calcium-silicate-insulation inserts of length at least as long as protective shield.
6. Thermal-Hanger Shields: Install with insulation same thickness as piping insulation.

3.3 EQUIPMENT SUPPORTS

A. Fabricate structural-steel stands to suspend equipment from structure overhead or to support equipment above floor.

B. Grouting: Place grout under supports for equipment and make bearing surface smooth.

C. Provide lateral bracing, to prevent swaying, for equipment supports.

3.4 METAL FABRICATIONS

A. Cut, drill, and fit miscellaneous metal fabrications for trapeze pipe hangers and equipment supports.

B. Fit exposed connections together to form hairline joints. Field weld connections that cannot be shop welded because of shipping size limitations.

C. Field Welding: Comply with AWS D1.1/D1.1M procedures for shielded, metal arc welding; appearance and quality of welds; and methods used in correcting welding work; and with the following:

1. Use materials and methods that minimize distortion and develop strength and corrosion resistance of base metals.
2. Obtain fusion without undercut or overlap.
3. Remove welding flux immediately.
4. Finish welds at exposed connections so no roughness shows after finishing and so contours of welded surfaces match adjacent contours.

3.5 ADJUSTING

A. Hanger Adjustments: Adjust hangers to distribute loads equally on attachments and to achieve indicated slope of pipe.

B. Trim excess length of continuous-thread hanger and support rods to 1-1/2 inches (40 mm).

3.6 PAINTING

A. Touchup: Clean field welds and abraded areas of shop paint. Paint exposed areas immediately after erecting hangers and supports. Use same materials as used for shop painting. Comply with SSPC-PA 1 requirements for touching up field-painted surfaces.

1. Apply paint by brush or spray to provide a minimum dry film thickness of 2.0 mils (0.05 mm).

B. Galvanized Surfaces: Clean welds, bolted connections, and abraded areas and apply galvanizing-repair paint to comply with ASTM A780/A780M.

3.7 HANGER AND SUPPORT SCHEDULE

A. Specific hanger and support requirements are in Sections specifying piping systems and equipment.

B. Comply with MSS SP-58 for pipe-hanger selections and applications that are not specified in piping system Sections.

C. Use hangers and supports with galvanized metallic coatings for piping and equipment that will not have field-applied finish.

D. Use nonmetallic coatings on attachments for electrolytic protection where attachments are in direct contact with copper tubing.

E. Use carbon-steel pipe hangers and supports, metal trapeze pipe hangers and attachments for general service applications.

F. Use copper-plated pipe hangers and copper or stainless steel attachments for copper piping and tubing.

G. Use padded hangers for piping that is subject to scratching.

H. Use thermal-hanger shield inserts for insulated piping and tubing.

I. Horizontal-Piping Hangers and Supports: Unless otherwise indicated and except as specified in piping system Sections, install the following types:

1. Adjustable, Steel Clevis Hangers (MSS Type 1): For suspension of noninsulated or insulated, stationary pipes NPS 1/2 to NPS 30 (DN 15 to DN 750).
2. Yoke-Type Pipe Clamps (MSS Type 2): For suspension of up to 1050 deg F (566 deg C), pipes NPS 4 to NPS 24 (DN 100 to DN 600), requiring up to 4 inches (100 mm) of insulation.
3. Carbon- or Alloy-Steel, Double-Bolt Pipe Clamps (MSS Type 3): For suspension of pipes NPS 3/4 to NPS 36 (DN 20 to DN 900), requiring clamp flexibility and up to 4 inches (100 mm) of insulation.
4. Steel Pipe Clamps (MSS Type 4): For suspension of cold and hot pipes NPS 1/2 to NPS 24 (DN 15 to DN 600) if little or no insulation is required.

5. Pipe Hangers (MSS Type 5): For suspension of pipes NPS 1/2 to NPS 4 (DN 15 to DN 100), to allow off-center closure for hanger installation before pipe erection.
6. Adjustable, Swivel Split- or Solid-Ring Hangers (MSS Type 6): For suspension of noninsulated, stationary pipes NPS 3/4 to NPS 8 (DN 20 to DN 200).
7. Adjustable, Steel Band Hangers (MSS Type 7): For suspension of noninsulated, stationary pipes NPS 1/2 to NPS 8 (DN 15 to DN 200).
8. Adjustable Band Hangers (MSS Type 9): For suspension of noninsulated, stationary pipes NPS 1/2 to NPS 8 (DN 15 to DN 200).
9. Adjustable, Swivel-Ring Band Hangers (MSS Type 10): For suspension of noninsulated, stationary pipes NPS 1/2 to NPS 8 (DN 15 to DN 200).
10. Split Pipe Ring with or without Turnbuckle Hangers (MSS Type 11): For suspension of noninsulated, stationary pipes NPS 3/8 to NPS 8 (DN 10 to DN 200).
11. Extension Hinged or Two-Bolt Split Pipe Clamps (MSS Type 12): For suspension of noninsulated, stationary pipes NPS 3/8 to NPS 3 (DN 10 to DN 80).
12. U-Bolts (MSS Type 24): For support of heavy pipes NPS 1/2 to NPS 30 (DN 15 to DN 750).
13. Clips (MSS Type 26): For support of insulated pipes not subject to expansion or contraction.
14. Pipe Saddle Supports (MSS Type 36): For support of pipes NPS 4 to NPS 36 (DN 100 to DN 900), with steel-pipe base stanchion support and cast-iron floor flange or carbon-steel plate.
15. Pipe Stanchion Saddles (MSS Type 37): For support of pipes NPS 4 to NPS 36 (DN 100 to DN 900), with steel-pipe base stanchion support and cast-iron floor flange or carbon-steel plate, and with U-bolt to retain pipe.
16. Adjustable Pipe Saddle Supports (MSS Type 38): For stanchion-type support for pipes NPS 2-1/2 to NPS 36 (DN 65 to DN 900) if vertical adjustment is required, with steel-pipe base stanchion support and cast-iron floor flange.

J. Vertical-Piping Clamps: Unless otherwise indicated and except as specified in piping system Sections, install the following types:

1. Extension Pipe or Riser Clamps (MSS Type 8): For support of pipe risers NPS 3/4 to NPS 24 (DN 24 to DN 600).
2. Carbon- or Alloy-Steel Riser Clamps (MSS Type 42): For support of pipe risers NPS 3/4 to NPS 24 (DN 20 to DN 600) if longer ends are required for riser clamps.

K. Hanger-Rod Attachments: Unless otherwise indicated and except as specified in piping system Sections, install the following types:

1. Steel Turnbuckles (MSS Type 13): For adjustment up to 6 inches (150 mm) for heavy loads.
2. Steel Clevises (MSS Type 14): For 120 to 450 deg F (49 to 232 deg C) piping installations.
3. Swivel Turnbuckles (MSS Type 15): For use with MSS Type 11, split pipe rings.
4. Malleable-Iron Sockets (MSS Type 16): For attaching hanger rods to various types of building attachments.
5. Steel Weldless Eye Nuts (MSS Type 17): For 120 to 450 deg F (49 to 232 deg C) piping installations.

L. Building Attachments: Unless otherwise indicated and except as specified in piping system Sections, install the following types:

1. Side-Beam Brackets (MSS Type 34): For sides of steel or wooden beams.

M. Saddles and Shields: Unless otherwise indicated and except as specified in piping system Sections, install the following types:

1. Steel-Pipe-Covering Protection Saddles (MSS Type 39): To fill interior voids with insulation that matches adjoining insulation.
2. Protection Shields (MSS Type 40): Of length recommended in writing by manufacturer to prevent crushing insulation.
3. Thermal-Hanger Shield Inserts: For supporting insulated pipe.

N. Spring Hangers and Supports: Unless otherwise indicated and except as specified in piping system Sections, install the following types:

1. Restraint-Control Devices (MSS Type 47): Where indicated to control piping movement.
2. Spring Cushions (MSS Type 48): For light loads if vertical movement does not exceed 1-1/4 inches (32 mm).
3. Spring-Cushion Roll Hangers (MSS Type 49): For equipping Type 41, roll hanger with springs.
4. Spring Sway Braces (MSS Type 50): To retard sway, shock, vibration, or thermal expansion in piping systems.
5. Variable-Spring Hangers (MSS Type 51): Preset to indicated load and limit variability factor to 25 percent to allow expansion and contraction of piping system from hanger.
6. Variable-Spring Base Supports (MSS Type 52): Preset to indicated load and limit variability factor to 25 percent to allow expansion and contraction of piping system from base support.
7. Variable-Spring Trapeze Hangers (MSS Type 53): Preset to indicated load and limit variability factor to 25 percent to allow expansion and contraction of piping system from trapeze support.
8. Constant Supports: For critical piping stress and if necessary to avoid transfer of stress from one support to another support, critical terminal, or connected equipment. Include auxiliary stops for erection, hydrostatic test, and load-adjustment capability. These supports include the following types:

    a. Horizontal (MSS Type 54): Mounted horizontally.
    b. Vertical (MSS Type 55): Mounted vertically.
    c. Trapeze (MSS Type 56): Two vertical-type supports and one trapeze member.

O. Comply with MSS SP-58 for trapeze pipe-hanger selections and applications that are not specified in piping system Sections.

P. Comply with MFMA-103 for metal framing system selections and applications that are not specified in piping system Sections.

Q. Use powder-actuated fasteners or mechanical-expansion anchors instead of building attachments where required in concrete construction.

END OF SECTION 230529

SECTION 230548 - VIBRATION AND SEISMIC CONTROLS FOR HVAC

PART 1 - GENERAL

1.1 SUMMARY

A. Section Includes:

1. Elastomeric isolation pads.
2. Snubbers.

1.2 DEFINITIONS

A. Designated Seismic System: An HVAC component that requires design in accordance with ASCE/SEI 7, Ch. 13, and for which the Component Importance Factor is greater than 1.0.

B. IBC: International Building Code.

1.3 ACTION SUBMITTALS

A. Product Data: For each type of product.

1. Include rated load, rated deflection, and overload capacity for each vibration isolation device.
2. Illustrate and indicate style, material, strength, fastening provision, and finish for each type and size of vibration isolation device and seismic restraint component.
3. Annotate types and sizes of seismic restraints and accessories, complete with listing markings or report numbers and load rating in tension and compression as evaluated by an agency acceptable to authorities having jurisdiction.
4. Annotate to indicate application of each product submitted and compliance with requirements.
5. Interlocking Snubbers: Include ratings for horizontal, vertical, and combined loads.

B. Shop Drawings:

1. Detail fabrication and assembly of equipment bases.
2. Vibration Isolation Base Details: Detail fabrication including anchorages and attachments to structure and to supported equipment. Include adjustable motor bases, rails, and frames for equipment mounting.

C. Delegated Design Submittals:

1. For each seismic-restraint device, including seismic-restrained mounting snubber, seismic restraint seismic-restraint accessory, and concrete anchor and insert that is required by this Section or is indicated on Drawings, submit the following:

a. Concrete Anchors and Inserts: Include calculations showing anticipated seismic loads. Include certification that device is approved by an NRTL for seismic reinforcement use.
b. Seismic Design Calculations: Submit all input data and loading calculations prepared under "Seismic Design Calculations" Paragraph in "Performance Requirements" Article.
c. Qualified Professional Engineer: All designated-design submittals for seismic-restraint calculations are to be signed and sealed by qualified professional engineer responsible for their preparation.

2. Seismic-Restraint Detail Drawing:

a. Design Analysis: To support selection and arrangement of seismic restraints. Include calculations of combined tensile and shear loads.
b. Details: Indicate fabrication and arrangement. Detail attachments of restraints to restrained items and to the structure. Show attachment locations, methods, and spacings. Identify components, list their strengths, and indicate directions and values of forces transmitted to the structure during seismic events. Indicate association with vibration isolation devices.

3. All delegated design submittals for seismic-restraint detail Drawings are to be signed and sealed by qualified professional engineer responsible for their preparation.
4. Product Listing, Preapproval, and Evaluation Documentation: By an evaluation service member of an agency acceptable to authorities having jurisdiction, showing maximum ratings of restraint items and basis for approval (tests or calculations).

1.4 INFORMATIONAL SUBMITTALS

A. Coordination Drawings: Show coordination of vibration isolation device installation and seismic bracing for HVAC piping and equipment with other systems and equipment in the vicinity, including other supports and restraints, if any.

1.5 CLOSEOUT SUBMITTALS

1.6 QUALITY ASSURANCE

A. Seismic-Restraint Device Load Ratings: Devices to be tested and rated in accordance with applicable code requirements and authorities having jurisdiction. Devices to be listed by a nationally recognized third party that requires periodic follow-up inspections and has a listing directory available to the public. Provide third-party listing by one or more of the following: an agency acceptable to authorities having jurisdiction.

PART 2 - PRODUCTS

2.1 PERFORMANCE REQUIREMENTS

A. Delegated Design: Engage a qualified professional engineer to design seismic control system.

1. Seismic Performance: Equipment to withstand the effects of earthquake motions determined in accordance with ASCE/SEI 7-16.

B. Seismic Design Calculations:

1. Perform calculations to obtain force information necessary to properly select seismic-restraint devices, fasteners, and anchorage. Perform calculations using methods acceptable to applicable code authorities and as presented in ASCE/SEI 7-16. Where "ASCE/SEI 7" is used throughout this Section, it is to be understood that the edition referred to in this subparagraph is the edition intended as reference throughout the Section Text.

a. Data indicated below to be determined by Delegated Design Contractor must be obtained by Contractor and must be included in individual component submittal packages.

C. Consequential Damage: Provide additional seismic restraints for suspended HVAC components or anchorage of floor-, roof-, or wall-mounted HVAC components as indicated in ASCE/SEI 7-16 so that failure of a non-essential or essential HVAC component will not cause failure of any other essential architectural, mechanical, or electrical building component.

D. Component Supports:

1. Load ratings, features, and applications of all reinforcement components must be based on testing standards of a nationally recognized testing agency.
2. All component support attachments must comply with force and displacement resistance requirements of ASCE/SEI 7-16 Section 13.6.

2.2 ELASTOMERIC ISOLATION PADS

A. Elastomeric Isolation Pads:

1. Source Limitations: Obtain elastomeric isolation pads from single manufacturer.
2. Fabrication: Single or multiple layers of sufficient durometer stiffness for uniform loading over pad area.
3. Size: Factory or field cut to match requirements of supported equipment.
4. Pad Material: Oil and water resistant with elastomeric properties. Neoprene rubber, silicone rubber, or other elastomeric material.
5. Surface Pattern: Smooth, ribbed, or waffle pattern.

a. Surface Pattern: Smooth, ribbed, or waffle pattern.

2.3 SNUBBERS

A. Source Limitations: Obtain snubbers from single manufacturer.

B. Description: Factory fabricated using welded structural-steel shapes and plates, anchor bolts, and replaceable resilient isolation washers and bushings.

1. Post-Installed Concrete Anchor Bolts: Secure to concrete surface with post-installed concrete anchors. Anchors to be seismically prequalified in accordance with ACI 355.2 testing and designated in accordance with ACI 318-14 Ch. 17 for 2015 or 2018 IBC.
2. Preset Concrete Inserts: Seismically prequalified in accordance with ICC-ES AC446 testing.
3. Anchors in Masonry: Design in accordance with TMS 402.
4. Resilient Isolation Washers and Bushings: Oil- and water-resistant neoprene.
5. Resilient Cushion: Maximum 1/4-inch (6-mm) air gap, and minimum 1/4 inch (6 mm) thick.

PART 3 - EXECUTION

3.1 EXAMINATION

A. Examine areas and equipment to receive vibration isolation and seismic devices for compliance with requirements for installation tolerances and other conditions affecting performance of the Work.

B. Examine roughing-in of reinforcement and cast-in-place anchors to verify actual locations before installation.

C. Proceed with installation only after unsatisfactory conditions have been corrected.

3.2 APPLICATIONS

A. Multiple Pipe Supports: Secure pipes to trapeze member with clamps approved for application by an agency acceptable to authorities having jurisdiction.

B. Hanger-Rod Stiffeners: Install where indicated or scheduled on Drawings to receive them and where required to prevent buckling of hanger rods due to seismic forces.

C. Strength of Support and Seismic-Restraint Assemblies: Where not indicated, select sizes of components so strength is adequate to carry present and future static and seismic loads within specified loading limits.

3.3 INSTALLATION OF VIBRATION-CONTROL AND SEISMIC-RESTRAINT DEVICES

A. Provide vibration-control devices for systems and equipment where indicated in Equipment Schedules or Vibration-Control Devices Schedules, where indicated on Drawings, or where Specifications indicate they are to be installed on specific equipment and systems.

B. Provide seismic-restraint control devices for systems and equipment where indicated in Equipment Schedules or Seismic-Restraint Devices Schedules, where indicated on Drawings, where Specifications indicate they are to be installed on specific equipment and systems, and where required by applicable codes.

C. Coordinate location of embedded connection hardware with supported equipment attachment and mounting points and with requirements for concrete reinforcement and formwork specified in Section 033000 "Cast-in-Place Concrete."

D. Installation of vibration isolators must not cause any change of position of equipment, piping, or ductwork resulting in stresses or misalignment.

E. Equipment Restraints:

1. Install seismic snubbers on HVAC equipment mounted on vibration isolators. Locate snubbers as close as possible to vibration isolators and bolt to equipment base and supporting structure.
2. Install resilient bolt isolation washers on equipment anchor bolts where clearance between anchor and adjacent surface exceeds 0.125 inch (3.2 mm).
3. Install seismic-restraint devices using methods approved by an agency acceptable to authorities having jurisdiction that provides required submittals for component.

F. Piping Restraints:

1. Comply with requirements in MSS SP-127.
2. Space lateral supports a maximum of 40 feet (12 m) o.c., and longitudinal supports a maximum of 80 feet (24 m) o.c.
3. Brace a change of direction longer than 12 feet (3.7 m).

G. Ductwork Restraints:

1. Install ducts with hangers and braces designed to support the duct and to restrain against seismic forces required by applicable building codes. Comply with SMACNA's "Seismic Restraint Manual: Guidelines for Mechanical Systems."
2. Space lateral supports a maximum of 40 feet (12 m) o.c., and longitudinal supports a maximum of 80 feet (24 m) o.c.
3. Brace a change of direction longer than 12 feet (3.7 m).
4. Select seismic-restraint devices with capacities adequate to carry static and seismic loads.
5. Install cable restraints on ducts that are suspended with vibration isolators.

H. Install seismic-load-restraint cables so they do not bend across edges of adjacent equipment or building structure.

I. Install seismic-restraint devices using methods approved by an agency acceptable to authorities having jurisdiction that provides required submittals for component.

J. Install bushing assemblies for anchor bolts for floor-mounted equipment, arranged to provide resilient media between anchor bolt and mounting hole in concrete base.

K. Install bushing assemblies for mounting bolts for wall-mounted equipment, arranged to provide resilient media where equipment or equipment-mounting channels are attached to wall.

L. Attachment to Structure: If specific attachment is not indicated, anchor bracing to structure at flanges of beams, at upper truss chords of bar joists, or at concrete members.

M. Mechanical Anchor Bolts:

1. Identify position of reinforcing steel and other embedded items prior to drilling holes for anchors. Do not damage existing reinforcing or embedded items during coring or drilling. Notify structural engineer if reinforcing steel or other embedded items are encountered during drilling. Locate and avoid prestressed tendons, electrical and telecommunications conduit, and gas lines.
2. Do not drill holes in concrete or masonry until concrete, mortar, or grout has achieved full design strength.
3. Wedge-Type Anchor Bolts: Protect threads from damage during anchor installation. Heavy-duty sleeve anchors to be installed with sleeve fully engaged in the structural element to which anchor is to be fastened.
4. Adhesive-Type Anchor Bolts: Clean holes to remove loose material and drilling dust prior to installation of adhesive. Place adhesive in holes proceeding from the bottom of the hole and progressing toward the surface in such a manner as to avoid introduction of air pockets in the adhesive.
5. Set anchors to manufacturer's recommended torque, using a torque wrench.
6. Install zinc-coated steel anchors for interior and stainless-steel anchors for exterior applications.

3.4 ADJUSTING

A. Adjust isolators after system is at operating weight.

B. Adjust limit stops on restrained-spring isolators to mount equipment at normal operating height. After equipment installation is complete, adjust limit stops so they are out of contact during normal operation.

3.5 FIELD QUALITY CONTROL

A. Testing Agency: Engage a qualified testing agency to perform tests and inspections.

B. Manufacturer's Field Service: Engage a factory-authorized service representative to test and inspect components, assemblies, and equipment installations, including connections.

C. Tests and Inspections:

1. Perform tests and inspections with the assistance of a factory-authorized service representative.
2. Provide evidence of recent calibration of test equipment by a testing agency acceptable to authorities having jurisdiction.
3. Schedule test with Owner, through Architect, before connecting anchorage device to restrained component (unless postconnection testing has been approved), and with at least seven days' advance notice.
4. Obtain Architect's approval before transmitting test loads to structure. Provide temporary load-spreading members.

5. Test no fewer than four of each type and size of installed anchors and fasteners selected by Architect.
6. Test to 90 percent of rated proof load of device.
7. Measure isolator restraint clearance.
8. Measure isolator deflection.
9. Verify snubber minimum clearances.
10. Test and adjust restrained-air-spring isolator controls and safeties.

D. Remove and replace malfunctioning units and retest as specified above.

E. Units will be considered defective if they do not pass tests and inspections.

F. Prepare test and inspection reports.

END OF SECTION 230548

SECTION 230553 - IDENTIFICATION FOR HVAC PIPING AND EQUIPMENT

PART 1 - GENERAL

1.1 SUMMARY

A. Section Includes:

1. Equipment labels.
2. Warning signs and labels.
3. Warning tape.
4. Pipe labels.
5. Duct labels.
6. Warning tags.

1.2 ACTION SUBMITTALS

A. Product Data: For each type of product.

B. Samples: For color, letter style, and graphic representation required for each identification material and device.

C. Equipment-Label Schedule: Include a listing of all equipment to be labeled with the proposed content for each label.

D. Valve Schedules: Provide for each piping system. Include in operation and maintenance manuals.

PART 2 - PRODUCTS

2.1 EQUIPMENT LABELS

A. Metal Labels for Equipment:
1. Material and Thickness: stainless steel, 0.025-inch (0.64-mm) minimum thickness, with predrilled or stamped holes for attachment hardware.
2. Letter and Background Color: As indicated for specific application under Part 3.
3. Minimum Label Size: Length and width vary for required label content, but not less than 2-1/2 by 3/4 inch (64 by 19 mm).
4. Minimum Letter Size: 1/4 inch (6.4 mm) for name of units if viewing distance is less than 24 inches (600 mm), 1/2 inch (13 mm) for viewing distances of up to 72 inches (1830 mm), and proportionately larger lettering for greater viewing distances. Include secondary lettering two-thirds to three-fourths the size of principal lettering.
5. Fasteners: Stainless steel rivets or self-tapping screws.
6. Adhesive: Contact-type permanent adhesive, compatible with label and with substrate.

2.2 WARNING SIGNS AND LABELS

A. Material and Thickness: Multilayer, multicolor, plastic labels for mechanical engraving, 1/16 inch (1.6 mm) thick, with predrilled holes for attachment hardware.

B. Letter and Background Color: As indicated for specific application under Part 3.

C. Minimum Label Size: Length and width vary for required label content, but not less than 2-1/2 by 3/4 inch (64 by 19 mm).

D. Minimum Letter Size: 1/4 inch (6.4 mm) for name of units if viewing distance is less than 24 inches (600 mm), 1/2 inch (13 mm) for viewing distances of up to 72 inches (1830 mm), and proportionately larger lettering for greater viewing distances. Include secondary lettering two-thirds to three-fourths the size of principal lettering.

E. Fasteners: Stainless steel rivets or self-taping screws.

F. Adhesive: Contact-type permanent adhesive, compatible with label and with substrate.

G. Arc-Flash Warning Signs: Provide arc-flash warning signs in locations and with content in accordance with requirements of OSHA and NFPA70E and other applicable codes and standards.

H. Label Content: Include caution and warning information plus emergency notification instructions.

2.3 WARNING TAPE

A. Material: Vinyl.

B. Minimum Thickness: 0.005 inch (0.12 mm).

C. Letter, Pattern, and Background Color: As indicated for specific application under Part 3.

D. Waterproof Adhesive Backing: Suitable for indoor or outdoor use.

E. Maximum Temperature: 160 deg F (70 deg C).

F. Minimum Width: 2 inches (50 mm).

2.4 PIPE LABELS

A. General Requirements for Manufactured Pipe Labels: Preprinted, color coded, with lettering indicating service and showing flow direction in accordance with ASME A13.1.

B. Letter and Background Color: As indicated for specific application under Part 3.

C. Pretensioned Pipe Labels: Precoiled, semirigid plastic formed to partially cover circumference of pipe and to attach to pipe without fasteners or adhesive.

D. Self-Adhesive Pipe Labels: Printed plastic with contact-type, permanent-adhesive backing.

E. Pipe Label Contents: Include identification of piping service using same designations or abbreviations as used on Drawings. Also include:

1. Pipe size.
2. Flow-Direction Arrows: Include flow-direction arrows on main distribution piping. Arrows may be either integral with label or applied separately.

2.5 DUCT LABELS

A. Material and Thickness: Multilayer, multicolor, plastic labels for mechanical engraving, 1/16 inch (1.6 mm) thick, and having predrilled holes for attachment hardware.

B. Letter and Background Color: As indicated for specific application under Part 3.

C. Maximum Temperature: Able to withstand temperatures up to 160 deg F (71 deg C).

D. Minimum Label Size: Length and width vary for required label content, but not less than 2-1/2 by 3/4 inch (64 by 19 mm).

E. Minimum Letter Size: 1/4 inch (6.4 mm) for name of units if viewing distance is less than 24 inches (600 mm), 1/2 inch (13 mm) for viewing distances of up to 72 inches (1830 mm), and proportionately larger lettering for greater viewing distances. Include secondary lettering two-thirds to three-fourths the size of principal lettering.

F. Fasteners: Stainless steel rivets or self-tapping screws.

G. Adhesive: Contact-type permanent adhesive, compatible with label and with substrate.

H. Duct Label Contents: Include identification of duct service using same designations or abbreviations as used on Drawings. Also include the following:

1. Duct size.
2. Flow-Direction Arrows: Include flow-direction arrows on main distribution ducts. Arrows may be either integral with label or may be applied separately.

2.6 WARNING TAGS

A. Description: Preprinted accident-prevention tags of plasticized card stock with matte finish suitable for writing.

1. Size: Approximately 4 by 7 inches (100 by 178 mm).
2. Fasteners: Brass grommet and wire.
3. Nomenclature: Large-size primary caption, such as "DANGER," "CAUTION," or "DO NOT OPERATE."
4. Letter and Background Color: As indicated for specific application under Part 3.

PART 3 - EXECUTION

3.1 PREPARATION

A. Clean piping and equipment surfaces of incompatible primers, paints, and encapsulants, as well as dirt, oil, grease, release agents, and other substances that could impair bond of identification devices.

3.2 INSTALLATION, GENERAL REQUIREMENTS

A. Coordinate installation of identifying devices with completion of covering and painting of surfaces where devices are to be applied.

B. Coordinate installation of identifying devices with locations of access panels and doors.

C. Install identifying devices before installing acoustical ceilings and similar concealment.

D. Locate identifying devices so that they are readily visible from the point of normal approach.

3.3 INSTALLATION OF EQUIPMENT LABELS, WARNING SIGNS, AND LABELS

A. Permanently fasten labels on each item of mechanical equipment.

B. Sign and Label Colors:

1. White letters on an ANSI Z535.1 safety-blue background.

C. Locate equipment labels where accessible and visible.

D. Arc-Flash Warning Signs: Provide arc-flash warning signs on electrical disconnects and other equipment where arc-flash hazard exists, as indicated on Drawings, and in accordance with requirements of OSHA and NFPA 70E, and other applicable codes and standards.

3.4 INSTALLATION OF WARNING TAPE

A. Warning Tape Color and Pattern: Yellow background with black diagonal stripes.

B. Install warning tape on pipes and ducts, with cross-designated walkways providing less than 6 ft. (2 m) of clearance.

C. Locate tape so as to be readily visible from the point of normal approach.

3.5 INSTALLATION OF PIPE LABELS

A. Install pipe labels showing service and flow direction with permanent adhesive on pipes.

B. Pipe-Label Locations: Locate pipe labels where piping is exposed or above accessible ceilings in finished spaces; machine rooms; accessible maintenance spaces such as shafts, tunnels, and plenums; and exterior exposed locations as follows:

1. Within 3 ft. (1 m) of each valve and control device.
2. At access doors, manholes, and similar access points that permit view of concealed piping.
3. Within 3 ft. (1 m) of equipment items and other points of origination and termination.
4. Spaced at maximum intervals of along each run. Reduce intervals to 10 ft. (3.0 m in areas of congested piping, ductwork, and equipment.

C. Do not apply plastic pipe labels or plastic tapes directly to bare pipes conveying fluids at temperatures of 125 deg F (52 deg C) or higher. Where these pipes are to remain uninsulated, use a short section of insulation or use stenciled labels.

D. Flow-Direction Arrows: Use arrows to indicate direction of flow in pipes, including pipes where flow is allowed in both directions.

E. Pipe-Label Color Schedule:
1. Refrigerant Piping: White letters on an ANSI Z535.1 safety-blue background.
2. Toxic and Corrosive Fluids: Black letters on an ANSI Z535.1 safety-orange background.
3. Flammable Fluids: Black letters on an ANSI Z535.1 safety-yellow background.
4. Combustible Fluids: White letters on an ANSI Z535.1 safety-brown background.

3.6 INSTALLATION OF DUCT LABELS

A. Install plastic-laminated self-adhesive duct labels showing service and flow direction with permanent adhesive on air ducts.

1. Provide labels in the following color codes:

a. For air supply ducts: White letters on blue background.
b. For air return ducts: White letters on blue background.
c. For exhaust-, outside-, relief-, return-, and mixed-air ducts: White letters on blue background.

B. Locate label near each point where ducts enter into and exit from concealed spaces and at maximum intervals of 10 ft. (6 m) where exposed or are concealed by removable ceiling system.

3.7 INSTALLATION OF WARNING TAGS

A. Warning Tag Color: Black letters on an ANSI Z535.1 safety-yellow background.

B. Attach warning tags, with proper message, to equipment and other items where scheduled.

END OF SECTION 230553

SECTION 230593 - TESTING, ADJUSTING, AND BALANCING FOR HVAC

PART 1 - GENERAL

1.1 SUMMARY

A. Section Includes:

1. Testing, Adjusting, and Balancing of Air Systems:
   a. Variable-air-volume systems.
2. Testing, adjusting, and balancing of equipment.
3. Duct leakage tests verification.
4. HVAC-control system verification.

1.2 DEFINITIONS

A. AABC: Associated Air Balance Council.

B. NEBB: National Environmental Balancing Bureau.

C. TAB: Testing, adjusting, and balancing.

D. TABB: Testing, Adjusting, and Balancing Bureau.

E. TAB Specialist: An independent entity meeting qualifications to perform TAB work.

1.3 INFORMATIONAL SUBMITTALS

A. Qualification Data: Within 30 days of Contractor's Notice to Proceed, submit documentation that the TAB specialist and this Project's TAB team members meet the qualifications specified in "Quality Assurance" Article.

B. Contract Documents Examination Report: Within 30 days of Contractor's Notice to Proceed, submit the Contract Documents review report, as specified in Part 3.

C. Strategies and Procedures Plan: Within 30 days of Contractor's Notice to Proceed, submit TAB strategies and step-by-step procedures, as specified in "Preparation" Article.

D. System Readiness Checklists: Within 30 days of Contractor's Notice to Proceed, submit system readiness checklists, as specified in "Preparation" Article.

E. Examination Report: Submit a summary report of the examination review required in "Examination" Article.

F. Certified TAB reports.

G. Sample report forms.

H. Instrument calibration reports, to include the following:

1. Instrument type and make.
2. Serial number.
3. Application.
4. Dates of use.
5. Dates of calibration.

1.4 QUALITY ASSURANCE

A. TAB Specialists Qualifications, Certified by AABC:

1. TAB Field Supervisor: Employee of the TAB specialist and certified by AABC.
2. TAB Technician: Employee of the TAB specialist and certified by AABC.

B. TAB Specialists Qualifications, Certified by TABB:

1. TAB Field Supervisor: Employee of the TAB specialist and certified by TABB.
2. TAB Technician: Employee of the TAB specialist and certified by TABB.

C. Instrumentation Type, Quantity, Accuracy, and Calibration: Comply with requirements in ASHRAE 111, Section 4, "Instrumentation."

D. ASHRAE/IES 90.1 Compliance: Applicable requirements in ASHRAE/IES 90.1, Section 6.7.2.3 - "System Balancing."

E. Code and AHJ Compliance: TAB is required to comply with governing codes and requirements of authorities having jurisdiction.

1.5 FIELD CONDITIONS

A. Full Owner Occupancy: Owner will occupy the site and existing building during entire TAB period. Cooperate with Owner during TAB operations to minimize conflicts with Owner's operations.

B. Partial Owner Occupancy: Owner may occupy completed areas of building before Substantial Completion. Cooperate with Owner during TAB operations to minimize conflicts with Owner's operations.

PART 2 - PRODUCTS (Not Applicable)

PART 3 - EXECUTION

3.1 TAB SPECIALISTS

1. Engage a qualified TAB specialist to perform test and inspections.

3.2 EXAMINATION

A. Examine the Contract Documents to become familiar with Project requirements and to discover conditions in systems designs that may preclude proper TAB of systems and equipment.

B. Examine the approved submittals for HVAC systems and equipment.

C. Examine design data, including HVAC system descriptions, statements of design assumptions for environmental conditions and systems output, and statements of philosophies and assumptions about HVAC system and equipment controls.

D. Examine equipment performance data, including fan and pump curves.

1. Relate performance data to Project conditions and requirements, including system effects that can create undesired or unpredicted conditions that cause reduced capacities in all or part of a system.
2. Calculate system-effect factors to reduce performance ratings of HVAC equipment when installed under conditions different from the conditions used to rate equipment performance. To calculate system effects for air systems, use tables and charts found in AMCA 201, "Fans and Systems," or in SMACNA's "HVAC Systems - Duct Design." Compare results with the design data and installed conditions.

E. Examine system and equipment installations and verify that field quality-control testing, cleaning, and adjusting specified in individual Sections have been performed.

F. Examine test reports specified in individual system and equipment Sections.

G. Examine HVAC equipment and verify that bearings are greased, belts are aligned and tight, filters are clean, and equipment with functioning controls is ready for operation.

H. Examine control valves for proper installation for their intended function of isolating, throttling, diverting, or mixing fluid flows.

I. Examine heat-transfer coils for correct piping connections and for clean and straight fins.

J. Examine system pumps to ensure absence of entrained air in the suction piping.

K. Examine operating safety interlocks and controls on HVAC equipment.

L. Examine control dampers for proper installation for their intended function of isolating, throttling, diverting, or mixing air flows.

M. Report deficiencies discovered before and during performance of TAB procedures. Observe and record system reactions to changes in conditions. Record default set points if different from indicated values.

3.3 PREPARATION

A. Prepare a TAB plan that includes the following:

1. Equipment and systems to be tested.
2. Strategies and step-by-step procedures for balancing the systems.
3. Instrumentation to be used.
4. Sample forms with specific identification for all equipment.

B. Perform system-readiness checks of HVAC systems and equipment to verify system readiness for TAB work. Include, at a minimum, the following:

1. Airside:

a. Verify that leakage and pressure tests on air distribution systems have been satisfactorily completed.
b. Duct systems are complete with terminals installed.
c. Volume, smoke, and fire dampers are open and functional.
d. Clean filters are installed.
e. Fans are operating, free of vibration, and rotating in correct direction.
f. Variable-frequency controllers' startup is complete and safeties are verified.
g. Automatic temperature-control systems are operational.
h. Ceilings are installed.
i. Windows and doors are installed.
j. Suitable access to balancing devices and equipment is provided.

3.4 GENERAL PROCEDURES FOR TESTING AND BALANCING

A. Perform testing and balancing procedures on each system in accordance with the procedures contained in NEBB's "Procedural Standards for Testing, Adjusting, and Balancing of Environmental Systems" and in this Section.

B. Cut insulation, ducts, pipes, and equipment casings for installation of test probes to the minimum extent necessary for TAB procedures.
1. After testing and balancing, install test ports and duct access doors that comply with requirements in Section 233300 "Air Duct Accessories."
2. Where holes for probes are required in piping or hydronic equipment, install pressure and temperature test plugs to seal systems.
3. Install and join new insulation that matches removed materials. Restore insulation, coverings, vapor barrier, and finish in accordance with Section 230713 "Duct Insulation," and Section 230719 "HVAC Piping Insulation."

C. Mark equipment and balancing devices, including damper-control positions, valve position indicators, fan-speed-control levers, and similar controls and devices, with paint or other suitable, permanent identification material to show final settings.

D. Take and report testing and balancing measurements in inch-pound (IP) and metric (SI) units.

3.5 TESTING, ADJUSTING, AND BALANCING OF HVAC EQUIPMENT

A. Test, adjust, and balance HVAC equipment indicated on Drawings, including, but not limited to, the following:
1. Furnaces.

2. Condensing units.
3. Coils.

3.6 GENERAL PROCEDURES FOR BALANCING AIR SYSTEMS

A. Prepare test reports for both fans and outlets. Obtain manufacturer's outlet factors and recommended testing procedures. Crosscheck the summation of required outlet volumes with required fan volumes.

B. Prepare schematic diagrams of systems' Record drawings duct layouts.

C. For variable-air-volume systems, develop a plan to simulate diversity.

D. Determine the best locations in main and branch ducts for accurate duct-airflow measurements.

E. Check airflow patterns from the outdoor-air louvers and dampers and the return- and exhaust-air dampers through the supply-fan discharge and mixing dampers.

F. Locate start-stop and disconnect switches, electrical interlocks, and motor starters.

G. Verify that motor starters are equipped with properly sized thermal protection.

H. Check dampers for proper position to achieve desired airflow path.

I. Check for airflow blockages.

J. Check condensate drains for proper connections and functioning.

K. Check for proper sealing of air-handling-unit components.

3.7 PROCEDURES FOR VARIABLE-AIR-VOLUME SYSTEMS

A. Adjust the variable-air-volume systems as follows:

1. Verify that the system static pressure sensor is located two-thirds of the distance down the duct from the fan discharge.
2. Verify that the system is under static pressure control.
3. Select the terminal unit that is most critical to the supply-fan airflow. Measure inlet static pressure, and adjust system static pressure control set point so the entering static pressure for the critical terminal unit is not less than the sum of the terminal-unit manufacturer's recommended minimum inlet static pressure plus the static pressure needed to overcome terminal-unit discharge system losses.
4. Calibrate and balance each terminal unit for maximum and minimum design airflow as follows:

    a. Adjust controls so that terminal is calling for maximum airflow. Some controllers require starting with minimum airflow. Verify calibration procedure for specific project.

b. Measure airflow and adjust calibration factor as required for design maximum airflow. Record calibration factor.
c. When maximum airflow is correct, balance the air outlets downstream from terminal units.
d. Adjust controls so that terminal is calling for minimum airflow.
e. Measure airflow and adjust calibration factor as required for design minimum airflow. Record calibration factor. If no minimum calibration is available, note any deviation from design airflow.
f. On constant volume terminals, in critical areas where room pressure is to be maintained, verify that the airflow remains constant over the full range of full cooling to full heating. Note any deviation from design airflow or room pressure.

5. After terminals have been calibrated and balanced, test and adjust system for total airflow. Adjust fans to deliver total design airflows within the maximum allowable fan speed listed by fan manufacturer.

a. Set outside-air, return-air, and relief-air dampers for proper position that simulates minimum outdoor-air conditions.
b. Set terminals for maximum airflow. If system design includes diversity, adjust terminals for maximum and minimum airflow, so that connected total matches fan selection and simulates actual load in the building.
c. Where duct conditions allow, measure airflow by main Pitot-tube traverse. If necessary, perform multiple Pitot-tube traverses close to the fan and prior to any outlets, to obtain total airflow.
d. Where duct conditions are unsuitable for Pitot-tube traverse measurements, a coil traverse may be acceptable.

6. Measure fan static pressures as follows:

a. Measure static pressure directly at the fan outlet or through the flexible connection.
b. Measure static pressure directly at the fan inlet or through the flexible connection.
c. Measure static pressure across each component that makes up the air-handling system.
d. Report any artificial loading of filters at the time static pressures are measured.

7. Set final return and outside airflow to the fan while operating at maximum return airflow and minimum outdoor airflow.

a. Balance the return-air ducts and inlets.
b. Verify that terminal units are meeting design airflow under system maximum flow.

8. Re-measure the inlet static pressure at the most critical terminal unit, and adjust the system static pressure set point to the most energy-efficient set point to maintain the optimum system static pressure. Record set point and give to controls Contractor.
9. Verify final system conditions as follows:

a. Re-measure and confirm that minimum outdoor, return, and relief airflows are within design. Readjust to match design if necessary.
b. Re-measure and confirm that total airflow is within design.
c. Re-measure final fan operating data, speed, volts, amps, and static profile.
d. Mark final settings.

e. Test system in economizer mode. Verify proper operation and adjust if necessary. Measure and record all operating data.
f. Verify tracking between supply and return fans.

3.8 DUCT LEAKAGE TESTS

A. Witness the duct leakage testing performed by Installer.

B. Verify that proper test methods are used and that leakage rates are within specified limits.

C. Report deficiencies observed.

3.9 HVAC CONTROLS VERIFICATION

A. In conjunction with system balancing, perform the following:

1. Verify HVAC control system is operating within the design limitations.
2. Confirm that the sequences of operation are in compliance with Contract Documents.
3. Verify that controllers are calibrated and function as intended.
4. Verify that controller set points are as indicated.
5. Verify the operation of lockout or interlock systems.
6. Verify the operation of valve and damper actuators.
7. Verify that controlled devices are properly installed and connected to correct controller.
8. Verify that controlled devices travel freely and are in position indicated by controller: open, closed, or modulating.
9. Verify location and installation of sensors to ensure that they sense only intended temperature, humidity, or pressure.

B. Reporting: Include a summary of verifications performed, remaining deficiencies, and variations from indicated conditions.

3.10 PROGRESS REPORTING

A. Initial Construction-Phase Report: Based on examination of the Contract Documents as specified in "Examination" Article, prepare a report on the adequacy of design for system-balancing devices. Recommend changes and additions to system-balancing devices, to facilitate proper performance measuring and balancing. Recommend changes and additions to HVAC systems and general construction to allow access for performance-measuring and -balancing devices.

B. Status Reports: Prepare weekly progress reports to describe completed procedures, procedures in progress, and scheduled procedures. Include a list of deficiencies and problems found in systems being tested and balanced. Prepare a separate report for each system and each building floor for systems serving multiple floors.

3.11 FINAL REPORT

A. General: Prepare a certified written report; tabulate and divide the report into separate sections for tested systems and balanced systems.

1. Include a certification sheet at the front of the report's binder, signed and sealed by the certified testing and balancing engineer.
2. Include a list of instruments used for procedures, along with proof of calibration.
3. Certify validity and accuracy of field data.

B. Final Report Contents: In addition to certified field-report data, include the following:

1. Pump curves.
2. Fan curves.
3. Manufacturers' test data.
4. Field test reports prepared by system and equipment installers.
5. Other information relative to equipment performance; do not include Shop Drawings and Product Data.

C. General Report Data: In addition to form titles and entries, include the following data:

1. Title page.
2. Name and address of the TAB specialist.
3. Project name.
4. Project location.
5. Architect's name and address.
6. Engineer's name and address.
7. Contractor's name and address.
8. Report date.
9. Signature of TAB supervisor who certifies the report.
10. Table of Contents with the total number of pages defined for each section of the report. Number each page in the report.
11. Summary of contents, including the following:

    a. Indicated versus final performance.
    b. Notable characteristics of systems.
    c. Description of system operation sequence if it varies from the Contract Documents.

12. Nomenclature sheets for each item of equipment.
13. Data for terminal units, including manufacturer's name, type, size, and fittings.
14. Notes to explain why certain final data in the body of reports vary from indicated values.
15. Test conditions for fans performance forms, including the following:

    a. Settings for outdoor-, return-, and exhaust-air dampers.
    b. Conditions of filters.
    c. Cooling coil, wet- and dry-bulb conditions.
    d.
    e. Fan drive settings, including settings and percentage of maximum pitch diameter.
    f. Settings for pressure controller(s).
    g. Other system operating conditions that affect performance.

16. Test conditions for pump performance forms, including the following:

    a. Variable-frequency controller settings for variable-flow hydronic systems.
    b. Settings for pressure controller(s).
    c. Other system operating conditions that affect performance.

D. Apparatus-Coil Test Reports:

1. Coil Data:

    a. System identification.
    b. Location.
    c. Coil type.
    d. Number of rows.
    e. Fin spacing in fins per inch (mm) o.c.
    f. Make and model number.
    g. Face area in sq. ft. (sq. m).
    h. Tube size in NPS (DN).
    i. Tube and fin materials.
    j. Circuiting arrangement.

2. Test Data (Indicated and Actual Values):

    a. Airflow rate in cfm (L/s).
    b. Average face velocity in fpm (m/s).
    c. Air pressure drop in inches wg (Pa).
    d. Outdoor-air, wet- and dry-bulb temperatures in deg F (deg C).
    e. Return-air, wet- and dry-bulb temperatures in deg F (deg C).
    f. Entering-air, wet- and dry-bulb temperatures in deg F (deg C).
    g. Leaving-air, wet- and dry-bulb temperatures in deg F (deg C).
    h. Refrigerant expansion valve and refrigerant types.
    i. Refrigerant suction pressure in psig (kPa).
    j. Refrigerant suction temperature in deg F (deg C).

E. Instrument Calibration Reports:

1. Report Data:

    a. Instrument type and make.
    b. Serial number.
    c. Application.
    d. Dates of use.
    e. Dates of calibration.

3.12 VERIFICATION OF TAB REPORT

A. The TAB specialist's test and balance engineer shall conduct the inspection in the presence of Construction Manager.

B. Commissioning Authority shall randomly select measurements, documented in the final report, to be rechecked. Rechecking shall be limited to the lesser of either 10 percent of the total measurements recorded or the extent of measurements that can be accomplished in a normal 8-hour business day.

C. If rechecks yield measurements that differ from the measurements documented in the final report by more than the tolerances allowed, the measurements shall be noted as "FAILED."

D. If the number of "FAILED" measurements is greater than 10 percent of the total measurements checked during the final inspection, the TAB shall be considered incomplete and shall be rejected.

E. If recheck measurements find the number of failed measurements noncompliant with requirements indicated, proceed as follows:

1. TAB specialists shall recheck all measurements and make adjustments. Revise the final report and balancing device settings to include all changes; resubmit the final report and request a second final inspection. All changes shall be tracked to show changes made to previous report.
2. If the second final inspection also fails, Owner may pursue others Contract options to complete TAB work.

F. Prepare test and inspection reports.

3.13 ADDITIONAL TESTS

A. Within 90 days of completing TAB, perform additional TAB to verify that balanced conditions are being maintained throughout and to correct unusual conditions.

B. Seasonal Periods: If initial TAB procedures were not performed during near-peak summer and winter conditions, perform additional TAB during near-peak summer and winter conditions.

END OF SECTION 230593

SECTION 230713 - DUCT INSULATION

PART 1 - GENERAL

1.1 SUMMARY

A. Section includes insulating the following duct services:

1. Indoor, concealed supply and outdoor air.
2. Indoor, concealed return located in unconditioned space.
3. Outdoor, concealed supply and return.

B. Related Requirements:
1. Section 230719 "HVAC Piping Insulation."
2. Section 233113 "Metal Ducts" for duct liners.

1.2 ACTION SUBMITTALS

A. Product Data: For each type of product indicated. Include thermal conductivity, water-vapor permeance thickness, and jackets (both factory- and field-applied if any).

B. Shop Drawings: Include plans, elevations, sections, details, and attachments to other work.

1. Detail application of protective shields, saddles, and inserts at hangers for each type of insulation and hanger.
2. Detail insulation application at elbows, fittings, dampers, specialties and flanges for each type of insulation.
3. Detail application of field-applied jackets.
4. Detail application at linkages of control devices.

C. Samples: For each type of insulation and jacket indicated. Identify each Sample, describing product and intended use. Sample sizes are as follows:

1. Sheet Form Insulation Materials: 12 inches (300 mm) square.

1.3 QUALITY ASSURANCE

A. Installer Qualifications: Skilled mechanics who have successfully completed an apprenticeship program or craft training program, certified by the Department of Labor, Bureau of Apprenticeship and Training.

1.4 DELIVERY, STORAGE, AND HANDLING

A. Packaging: Insulation material containers are to be marked with the manufacturer's name, appropriate ASTM standard designation, type and grade, and maximum use temperature.

1.5 COORDINATION

A. Coordinate sizes and locations of supports, hangers, and insulation shields specified in Section 230529 "Hangers and Supports for HVAC Piping and Equipment."

B. Coordinate clearance requirements with duct Installer for duct insulation application. Before preparing ductwork Shop Drawings, establish and maintain clearance requirements for installation of insulation and field-applied jackets and finishes and for space required for maintenance.

C. Coordinate installation and testing of heat tracing.

1.6 SCHEDULING

A. Schedule insulation application after pressure testing systems and, where required, after installing and testing heat tracing. Insulation application may begin on segments that have satisfactory test results.

PART 2 - PRODUCTS

2.1 PERFORMANCE REQUIREMENTS

A. Surface-Burning Characteristics: For insulation and related materials, as determined by testing identical products in accordance with ASTM E84, by a testing agency acceptable to authorities having jurisdiction. Factory label insulation, jacket materials, adhesive, mastic, tapes, and cement material containers with appropriate markings of applicable testing agency.

1. All Insulation Installed Indoors: Flame-spread index of 25 or less, and smoke-developed index of 50 or less.

2.2 INSULATION MATERIALS

A. Products do not contain asbestos, lead, mercury, or mercury compounds.

B. Flexible Elastomeric: Closed-cell or expanded-rubber materials; suitable for maximum use temperature between minus 70 deg F (minus 57 deg C) and 220 deg F (104 deg C). Comply with ASTM C534, Type II for sheet materials.

C. Glass-Fiber Blanket: Glass fibers bonded with a thermosetting resin; suitable for maximum use temperature up to 450 deg F (232 deg C) in accordance with ASTM C411. Comply with ASTM C553, Type II, and ASTM C1290, Type III with factory-applied FSK jacket. Factory-applied jacket requirements are specified in "Factory-Applied Jackets" Article.

2.3 ADHESIVES

A. Materials are compatible with insulation materials, jackets, and substrates and for bonding insulation to itself and to surfaces to be insulated unless otherwise indicated.

B. Glass-Fiber and Mineral Wool Adhesive: Comply with MIL-A-3316C, Class 2, Grade A.

C. ASJ Adhesive, and FSK Jacket Adhesive: Comply with MIL-A-3316C, Class 2, Grade A for bonding insulation jacket lap seams and joints.

2.4 LAGGING ADHESIVES

A. Description: Comply with MIL-A-3316C, Class I, Grade A and are compatible with insulation materials, jackets, and substrates.
   1. Fire-resistant, water-based lagging adhesive and coating for use indoors to adhere fire-resistant lagging cloths over duct insulation.
   2. Service Temperature Range: 0 to plus 180 deg F (Minus 18 to plus 82 deg C).

2.5 SEALANTS

A. FSK and Metal Jacket Flashing Sealants:
   1. Materials are compatible with insulation materials, jackets, and substrates.
   2. Fire- and water-resistant, flexible, elastomeric sealant.
   3. Service Temperature Range: Minus 40 to plus 250 deg F (Minus 40 to plus 121 deg C).

B. ASJ Flashing Sealants, and Vinyl and PVC Jacket Flashing Sealants:

   1.
   2. Materials are compatible with insulation materials, jackets, and substrates.
   3. Fire- and water-resistant, flexible, elastomeric sealant.
   4. Service Temperature Range: Minus 40 to plus 250 deg F (Minus 40 to plus 121 deg C).

2.6 FACTORY-APPLIED JACKETS

Coordinate types of factory-applied jacket insulation materials selected and types of factory-applied jackets indicated in insulation system schedules.

Knauf is the only glass-fiber insulation manufacturer that offers factory-applied FSP jacket for blanket insulation. CertainTeed and Johns Manville offer a vinyl jacket, but it does not comply with ASTM C1136. Owens Corning does not offer an FSP or a vinyl product.

A. Insulation system schedules indicate factory-applied jackets on various applications. When factory-applied jackets are indicated, comply with the following:

   1. ASJ: White, kraft-paper, fiberglass-reinforced scrim with aluminum-foil backing; complying with ASTM C1136, Type I.
   2. ASJ-SSL: ASJ with self-sealing, pressure-sensitive, acrylic-based adhesive covered by a removable protective strip; complying with ASTM C1136, Type I.
   3. FSK Jacket: Aluminum-foil, fiberglass-reinforced scrim with kraft-paper backing; complying with ASTM C1136, Type II.
   4. FSP Jacket: Aluminum-foil, fiberglass-reinforced scrim with polyethylene backing; complying with ASTM C1136, Type II.

5. Vinyl Jacket: White vinyl with a permeance of 1.3 perms (0.86 metric perm) when tested in accordance with ASTM E96/E96M, Procedure A, and complying with NFPA 90A and NFPA 90B.
6. ASJ+: All-service jacket composed of aluminum foil reinforced with glass scrim bonded to a kraft paper interleaving with an outer film leaving no paper exposed; complying with ASTM C1136, Types I, II, III, IV, and VII.
7. PSK Jacket: Aluminum foil, fiberglass-reinforced scrim with polyethylene backing; complying with ASTM C1136, Type II.

2.7 FIELD-APPLIED JACKETS

Insulation jackets in this article are for field application. ASTM C921, Type I, is for use over insulation on ducts operating at below ambient temperatures at least part of the time or where a vapor barrier is required. ASTM C921, Type II, is for use over insulation on ducts operating above ambient temperatures or where a vapor retarder is not required.

A. Field-applied jackets comply with ASTM C921, Type I, unless otherwise indicated.

A properly sealed FSK jacket, common with most forms of factory-applied jackets for mineral-fiber insulation, complies with vapor-retarder requirements in ASTM C921, Type I.

B. FSK Jacket: Aluminum-foil-face, fiberglass-reinforced scrim with kraft-paper backing.

Although other thicknesses for PVC jackets are available, a flame-spread index of 25 and a smoke-developed index of 50 apply only to thicknesses of 30 mils (0.8 mm) and less.

C. PVC Jacket: High-impact-resistant, UV-resistant PVC complying with ASTM D1784, Class 16354-C; thickness as scheduled; roll stock ready for shop or field cutting and forming. Thickness is indicated in field-applied jacket schedules.
   1. Adhesive: As recommended by jacket material manufacturer.

PVC jackets are available in several colors. Colored jackets may be used to replace field painting. UV rays fade colors in exterior applications. Some colors (black, gray, and white) do not fade as quickly as other colors (red, orange, and green). Colored jackets have different emissivity and are not recommended for outdoor use.

   2. Color: White.

D. Self-Adhesive Indoor/Outdoor Jacket (Non-Asphaltic): Vapor barrier and waterproofing jacket for installation over insulation located aboveground outdoors or indoors. Specialized jacket has five layers of laminated aluminum and polyester film with low-temperature acrylic pressure-sensitive adhesive. Outer aluminum surface is coated with UV-resistant coating for protection from environmental contaminants.

   1. Permeance: 0.00 perm as tested in accordance with ASTM F1249.
   2. Flamespread/Smoke Developed: 25/50 as tested in accordance with ASTM E84.
   3. Aluminum Finish: Embossed.

2.8 TAPES

A. FSK Tape: Foil-face, vapor-retarder tape matching factory-applied jacket with acrylic adhesive; complying with ASTM C1136.

1. Width: 3 inches (75 mm).
2. Thickness: 6.5 mils (0.16 mm).
3. Adhesion: 90 ounces force/inch (1.0 N/mm) in width.
4. Elongation: 2 percent.
5. Tensile Strength: 40 lbf/inch (7.2 N/mm) in width.
6. FSK Tape Disks and Squares: Precut disks or squares of FSK tape.

B. Aluminum-Foil Tape: Vapor-retarder tape with acrylic adhesive.

1. Width: 2 inches (50 mm).
2. Thickness: 3.7 mils (0.093 mm).
3. Adhesion: 100 ounces force/inch (1.1 N/mm) in width.
4. Elongation: 5 percent.
5. Tensile Strength: 34 lbf/inch (6.2 N/mm) in width.

2.9 SECUREMENTS

A. Bands:

1. Stainless Steel: ASTM A240/A240M, Type 304; 0.015 inch (0.38 mm) thick, 1/2 inch (13 mm) wide with wing seal or closed seal.
2. Aluminum: ASTM B209 (ASTM B209M), Alloy 3003, 3005, 3105, or 5005; Temper H-14, 0.020 inch (0.51 mm) thick, 1/2 inch (13 mm) wide with wing seal or closed seal.
3. Springs: Twin spring set constructed of stainless steel with ends flat and slotted to accept metal bands. Spring size determined by manufacturer for application.

B. Insulation Pins and Hangers:

1. Capacitor-Discharge-Weld Pins: Copper- or zinc-coated steel pin, fully annealed for capacitor-discharge welding, 0.135-inch- (3.5-mm-) diameter shank, length to suit depth of insulation indicated.

2. Cupped-Head, Capacitor-Discharge-Weld Pins: Copper- or zinc-coated steel pin, fully annealed for capacitor-discharge welding, 0.106-inch- (2.6-mm) diameter shank, length to suit depth of insulation indicated with integral 1-1/2-inch (38-mm) galvanized carbon-steel washer.

3. Metal, Adhesively Attached, Perforated-Base Insulation Hangers: Baseplate welded to projecting spindle that is capable of holding insulation, of thickness indicated, securely in position indicated when self-locking washer is in place. Comply with the following requirements:
   a. Baseplate: Perforated, galvanized carbon-steel sheet, 0.030 inch (0.76 mm) thick by 2 inches (50 mm) square.
   b. Spindle: Copper- or zinc-coated, low-carbon steel, fully annealed, 0.106-inch- (2.6-mm-) diameter shank, length to suit depth of insulation indicated.

c. Adhesive: Recommended by hanger manufacturer. Product with demonstrated capability to bond insulation hanger securely to substrates indicated without damaging insulation, hangers, and substrates.

4. Nonmetal, Adhesively Attached, Perforated-Base Insulation Hangers: Baseplate fastened to projecting spindle that is capable of holding insulation, of thickness indicated, securely in position indicated when self-locking washer is in place. Comply with the following requirements:
   a. Baseplate: Perforated, nylon sheet, 0.030 inch (0.76 mm) thick by 1-1/2 inches (38 mm) in diameter.
   b. Spindle: Nylon, 0.106-inch- (2.6-mm-) diameter shank, length to suit depth of insulation indicated, up to 2-1/2 inches (63 mm).
   c. Adhesive: Recommended by hanger manufacturer. Product with demonstrated capability to bond insulation hanger securely to substrates indicated without damaging insulation, hangers, and substrates.

5. Self-Sticking-Base Insulation Hangers: Baseplate welded to projecting spindle that is capable of holding insulation, of thickness indicated, securely in position indicated when self-locking washer is in place. Comply with the following requirements:
   a. Baseplate: Galvanized carbon-steel sheet, 0.030 inch (0.76 mm) thick by 2 inches (50 mm) square.
   b. Spindle: Copper- or zinc-coated, low-carbon steel, fully annealed, 0.106-inch- (2.6-mm-) diameter shank, length to suit depth of insulation indicated.
   c. Adhesive-backed base with a peel-off protective cover.

6. Insulation-Retaining Washers: Self-locking washers formed from 0.016-inch- (0.41-mm-) thick, galvanized-steel sheet, with beveled edge sized as required to hold insulation securely in place but not less than 1-1/2 inches (38 mm) in diameter.
   a. Protect ends with capped self-locking washers incorporating a spring steel insert to ensure permanent retention of cap in exposed locations.

7. Nonmetal Insulation-Retaining Washers: Self-locking washers formed from 0.016-inch- (0.41-mm-) thick nylon sheet, with beveled edge sized as required to hold insulation securely in place but not less than 1-1/2 inches (38 mm) in diameter.

C. Staples: Outward-clinching insulation staples, nominal 3/4-inch- (19-mm-) wide, stainless steel or Monel.

D. Wire: 0.062-inch (1.6-mm) soft-annealed, stainless steel.

2.10 CORNER ANGLES

A. Stainless Steel Corner Angles: 0.024 inch (0.61 mm) thick, minimum 1 by 1 inch (25 by 25 mm), stainless steel in accordance with ASTM A240/A240M, Type 304.

PART 3 - EXECUTION

3.1 EXAMINATION

A. Examine substrates and conditions for compliance with requirements for installation tolerances and other conditions affecting performance of insulation application.

1. Verify that systems to be insulated have been tested and are free of defects.
2. Verify that surfaces to be insulated are clean and dry.

B. Proceed with installation only after unsatisfactory conditions have been corrected.

3.2 PREPARATION

A. Surface Preparation: Clean and dry surfaces to receive insulation. Remove materials that will adversely affect insulation application.

3.3 GENERAL INSTALLATION REQUIREMENTS

A. Install insulation materials, accessories, and finishes with smooth, straight, and even surfaces; free of voids throughout the length of ducts and fittings.

B. Install accessories compatible with insulation materials and suitable for the service. Install accessories that do not corrode, compress, or otherwise damage insulation or jacket.

C. Install insulation with longitudinal seams at top and bottom of horizontal runs.

D. Install multiple layers of insulation with longitudinal and end seams staggered.

E. Keep insulation materials dry during application and finishing. Replace insulation materials that get wet during storage or in the installation process before being properly covered and sealed in accordance with Contract Documents.

F. Install insulation with tight longitudinal seams and end joints. Bond seams and joints with adhesive recommended by insulation material manufacturer.

G. Install insulation with least number of joints practical.

H. Apply adhesives, mastics, and sealants at manufacturer's recommended coverage rate and wet and dry film thicknesses.

I. Cut insulation in a manner to avoid compressing insulation.

J. Finish installation with systems at operating conditions. Repair joint separations and cracking due to thermal movement.

K. Repair damaged insulation facings by applying same facing material over damaged areas. Extend patches at least 4 inches (100 mm) beyond damaged areas. Adhere, staple, and seal patches similar to butt joints.

3.4 PENETRATIONS

A. Insulation Installation at Interior Wall and Partition Penetrations (That Are Not Fire Rated): Install insulation continuously through walls and partitions.

3.5 INSTALLATION OF GLASS-FIBER AND MINERAL-WOOL INSULATION

A. Blanket Insulation Installation on Ducts and Plenums: Secure with adhesive and insulation pins.

B. Comply with manufacturer's written installation instructions.

1. Apply adhesives according to manufacturer's recommended coverage rates per unit area, for 100 percent coverage of duct and plenum surfaces.
2. Apply adhesive to entire circumference of ducts and to all surfaces of fittings and transitions.
3. Install either capacitor-discharge-weld pins and speed washers or cupped-head, capacitor-discharge-weld pins on sides and bottom of horizontal ducts and sides of vertical ducts as follows:

    a. On duct sides with dimensions 18 inches (450 mm) and smaller, place pins along longitudinal centerline of duct. Space 3 inches (75 mm) maximum from insulation end joints, and 16 inches (400 mm) o.c.
    b. On duct sides with dimensions larger than 18 inches (450 mm), place pins 16 inches (400 mm) o.c. each way, and 3 inches (75 mm) maximum from insulation joints. Install additional pins to hold insulation tightly against surface at cross bracing.
    c. Pins may be omitted from top surface of horizontal, rectangular ducts and plenums.
    d. Do not overcompress insulation during installation.
    e. Impale insulation over pins and attach speed washers.
    f. Cut excess portion of pins extending beyond speed washers or bend parallel with insulation surface. Cover exposed pins and washers with tape matching insulation facing.

4. For ducts and plenums with surface temperatures below ambient, install a continuous unbroken vapor barrier. Create a facing lap for longitudinal seams and end joints with insulation by removing 2 inches (50 mm) from one edge and one end of insulation segment. Secure laps to adjacent insulation section with 1/2-inch (13-mm) outward-clinching staples, 1 inch (25 mm) o.c. Install vapor barrier consisting of factory- or field-applied jacket, adhesive, vapor-barrier mastic, and sealant at joints, seams, and protrusions.

    a. Repair punctures, tears, and penetrations with tape or mastic to maintain vapor-barrier seal.
    b. Install vapor stops for ductwork and plenums operating below 50 deg F (10 deg C) at 18-foot (5.5-m) intervals. Vapor stops consist of vapor-barrier mastic applied in a Z-shaped pattern over insulation face, along butt end of insulation, and over the surface. Cover insulation face and surface to be insulated a width equal to two times the insulation thickness, but not less than 3 inches (75 mm).

5. Overlap unfaced blankets a minimum of 2 inches (50 mm) on longitudinal seams and end joints. At end joints, secure with steel bands spaced a maximum of 18 inches (450 mm) o.c.
6. Install insulation on rectangular duct elbows and transitions with a full insulation section for each surface. Install insulation on round and flat-oval duct elbows with individually mitered gores cut to fit the elbow.
7. Insulate duct stiffeners, hangers, and flanges that protrude beyond insulation surface with 6-inch- (150-mm-) wide strips of same material used to insulate duct. Secure on alternating sides of stiffener, hanger, and flange with pins spaced 6 inches (150 mm) o.c.

C. Board Insulation Installation on Ducts and Plenums: Secure with adhesive and insulation pins.

1. Apply adhesives according to manufacturer's recommended coverage rates per unit area, for 100 percent coverage of duct and plenum surfaces.
2. Apply adhesive to entire circumference of ducts and to all surfaces of fittings and transitions.
3. Install either capacitor-discharge-weld pins and speed washers or cupped-head, capacitor-discharge-weld pins on sides and bottom of horizontal ducts and sides of vertical ducts as follows:

    a. On duct sides with dimensions 18 inches (450 mm) and smaller, place pins along longitudinal centerline of duct. Space 3 inches (75 mm) maximum from insulation end joints, and 16 inches (400 mm) o.c.
    b. On duct sides with dimensions larger than 18 inches (450 mm), space pins 16 inches (400 mm) o.c. each way, and 3 inches (75 mm) maximum from insulation joints. Install additional pins to hold insulation tightly against surface at cross bracing.
    c. Pins may be omitted from top surface of horizontal, rectangular ducts and plenums.
    d. Do not overcompress insulation during installation.
    e. Cut excess portion of pins extending beyond speed washers or bend parallel with insulation surface. Cover exposed pins and washers with tape matching insulation facing.

4. For ducts and plenums with surface temperatures below ambient, install a continuous unbroken vapor barrier. Create a facing lap for longitudinal seams and end joints with insulation by removing 2 inches (50 mm) from one edge and one end of insulation segment. Secure laps to adjacent insulation section with 1/2-inch (13-mm) outward-clinching staples, 1 inch (25 mm) o.c. Install vapor barrier consisting of factory- or field-applied jacket, adhesive, vapor-barrier mastic, and sealant at joints, seams, and protrusions.

    a. Repair punctures, tears, and penetrations with tape or mastic to maintain vapor-barrier seal.
    b. Install vapor stops for ductwork and plenums operating below 50 deg F (10 deg C) at 18-foot (5.5-m) intervals. Vapor stops consist of vapor-barrier mastic applied in a Z-shaped pattern over insulation face, along butt end of insulation, and over the surface. Cover insulation face and surface to be insulated a width equal to two times the insulation thickness, but not less than 3 inches (75 mm).

5. Install insulation on rectangular duct elbows and transitions with a full insulation section for each surface. Groove and score insulation to fit as closely as possible to outside and

inside radius of elbows. Install insulation on round and flat-oval duct elbows with individually mitered gores cut to fit the elbow.

6. Insulate duct stiffeners, hangers, and flanges that protrude beyond insulation surface with 6-inch- (150-mm-) wide strips of same material used to insulate duct. Secure on alternating sides of stiffener, hanger, and flange with pins spaced 6 inches (150 mm) o.c.

3.6 FIELD QUALITY CONTROL

A. Testing Agency: Engage a qualified testing agency to perform tests and inspections.

B. Perform tests and inspections.

C. Tests and Inspections:

1. Inspect ductwork, randomly selected by Architect, by removing field-applied jacket and insulation in layers in reverse order of their installation. Extent of inspection is limited to one location for each duct system defined in the "Duct Insulation Schedule, General" Article.

3.7 DUCT INSULATION SCHEDULE, GENERAL

A. Plenums and Ducts Requiring Insulation:

1. Indoor, concealed supply and outdoor air.
2. Indoor, concealed return located in unconditioned space.
3. Outdoor, concealed supply and return.

B. Items Not Insulated:

1. Metal ducts with duct liner of sufficient thickness to comply with energy code and ASHRAE/IESNA 90.1.
2. Factory-insulated flexible ducts.
3. Factory-insulated plenums and casings.
4. Flexible connectors.
5. Vibration-control devices.
6. Factory-insulated access panels and doors.

3.8 INDOOR DUCT AND PLENUM INSULATION SCHEDULE

A. Concealed, round and flat-oval, supply-air duct insulation is the following:

1. Glass-Fiber Blanket: 2 inches (50 mm) thick and 1.5 lb/cu. ft. (24 kg/cu. m) nominal density.

B. Concealed, round and flat-oval, return-air duct insulation is the following:

1. Glass-Fiber Blanket: 2 inches (50 mm) thick and 1.5 lb/cu. ft. (24 kg/cu. m) nominal density.

C. Concealed, rectangular, supply-air duct insulation is the following:

1. Glass-Fiber Blanket: 2 inches (50 mm) thick and 1.5 lb/cu. ft. (24 kg/cu. m) nominal density.

D. Concealed, rectangular, return-air duct insulation is the following:

1. Glass-Fiber Blanket: 2 inches (50 mm) thick and 1.5 lb/cu. ft. (24 kg/cu. m) nominal density.

END OF SECTION 230713

SECTION 230719 - HVAC PIPING INSULATION

PART 1 - GENERAL

1.1 SUMMARY

A. Section includes insulation for HVAC piping systems.

B. Related Requirements:

1. Section 230713 "Duct Insulation" for duct insulation.

1.2 ACTION SUBMITTALS

A. Product Data: For each type of product. Include thermal conductivity, water-vapor permeance thickness, and jackets (both factory and field applied, if any).

1.3 INFORMATIONAL SUBMITTALS

A. Field quality-control reports.

1.4 QUALITY ASSURANCE

A. Installer Qualifications: Skilled mechanics who have successfully completed an apprenticeship program or craft training program, certified by the Department of Labor, Bureau of Apprenticeship and Training.

1.5 COORDINATION

A. Coordinate sizes and locations of supports, hangers, and insulation shields specified in Section 230529 "Hangers and Supports for HVAC Piping and Equipment."

B. Coordinate clearance requirements with piping Installer for piping insulation application. Before preparing piping Shop Drawings, establish and maintain clearance requirements for installation of insulation and field-applied jackets and finishes and for space required for maintenance.

PART 2 - PRODUCTS

2.1 PERFORMANCE REQUIREMENTS

A. Surface-Burning Characteristics: For insulation and related materials, as determined by testing identical products in accordance with ASTM E84 by a testing agency acceptable to authority

having jurisdiction. Factory label insulation, jacket materials, adhesive, mastic, tapes, and cement material containers with appropriate markings of applicable testing agency.

1. All Insulation Installed Indoors and Outdoors: Flame-spread index of 25 or less, and smoke-developed index of 50 or less.

2.2 INSULATION MATERIALS

A. Products do not contain asbestos, lead, mercury, or mercury compounds.

B. Products that come into contact with stainless steel have a leachable chloride content of less than 50 ppm when tested in accordance with ASTM C871.

C. Insulation materials for use on austenitic stainless steel are qualified as acceptable in accordance with ASTM C795.

D. Foam insulation materials do not use CFC or HCFC blowing agents in the manufacturing process.

E. Flexible Elastomeric: Closed-cell, or expanded-rubber materials; suitable for maximum use temperature between minus 70 deg F (minus 57 deg C) and 220 deg F (104 deg C). Comply with ASTM C534/C534M, Type I, for tubular materials, Type II for sheet materials.

2.3 ADHESIVES

A. Flexible Elastomeric and Polyolefin Adhesive: Solvent-based adhesive.
   1. Flame-spread index is 25 or less and smoke-developed index is 50 or less as tested in accordance with ASTM E84.
   2. Wet Flash Point: Below 0 deg F (minus 18 deg C).
   3. Service Temperature Range: 40 to 200 deg F (4 to plus 93 deg C).
   4. Color: Black.

2.4 LAGGING ADHESIVES

A. Adhesives comply with MIL-A-3316C, Class I, Grade A, and are compatible with insulation materials, jackets, and substrates.
   1. Fire-resistant, water-based lagging adhesive and coating for use indoors to adhere fire-resistant lagging cloths over pipe insulation.
   2. Service Temperature Range: 20 to plus 180 deg F (Minus 6 to plus 82 deg C).
   3. Color: White.

2.5 SECUREMENTS

A. Wire: 0.062-inch (1.6-mm) soft-annealed, stainless steel.

PART 3 - EXECUTION

3.1 EXAMINATION

A. Examine substrates and conditions for compliance with requirements for installation tolerances and other conditions affecting performance of insulation application.

1. Verify that systems to be insulated have been tested and are free of defects.
2. Verify that surfaces to be insulated are clean and dry.

B. Proceed with installation only after unsatisfactory conditions have been corrected.

3.2 PREPARATION

A. Clean and prepare surfaces to be insulated. Before insulating, apply a corrosion coating to insulated surfaces as follows:

1. Stainless Steel: Coat 300 series stainless steel with an epoxy primer 5 mils (0.127 mm) thick and an epoxy finish 5 mils (0.127 mm) thick if operating in a temperature range between 140 and 300 deg F (60 and 149 deg C). Consult coating manufacturer for appropriate coating materials and application methods for operating temperature range.
2. Carbon Steel: Coat carbon steel operating at a service temperature of between 32 and 300 deg F (0 and 149 deg C) with an epoxy coating. Consult coating manufacturer for appropriate coating materials and application methods for operating temperature range.

3.3 GENERAL INSTALLATION REQUIREMENTS

A. Install insulation materials, accessories, and finishes with smooth, straight, and even surfaces; free of voids throughout the length of piping, including fittings, valves, and specialties.

B. Install insulation materials, forms, vapor barriers or retarders, jackets, and of thicknesses required for each item of pipe system, as specified in insulation system schedules.

C. Install accessories compatible with insulation materials and suitable for the service. Install accessories that do not corrode, compress, or otherwise damage insulation or jacket.

D. Install insulation with longitudinal seams at top and bottom (12 o'clock and 6 o'clock positions) of horizontal runs.

E. Install multiple layers of insulation with longitudinal and end seams staggered.

F. Do not weld brackets, clips, or other attachment devices to piping, fittings, and specialties.

G. Keep insulation materials dry during storage, application, and finishing. Replace insulation materials that get wet during storage or in the installation process before being properly covered and sealed in accordance with the Contract Documents.

H. Install insulation with tight longitudinal seams and end joints. Bond seams and joints with adhesive recommended by insulation material manufacturer.

I. Install insulation with least number of joints practical.

J. Where vapor barrier is indicated, seal joints, seams, and penetrations in insulation at hangers, supports, anchors, and other projections with vapor-barrier mastic.

1. Install insulation continuously through hangers and around anchor attachments.
2. Install insert materials and insulation to tightly join the insert. Seal insulation to insulation inserts with adhesive or sealing compound recommended by insulation material manufacturer.

K. Apply adhesives, mastics, and sealants at manufacturer's recommended coverage rate and wet and dry film thicknesses.

L. Install insulation with factory-applied jackets as follows:

1. Draw jacket tight and smooth, but not to the extent of creating wrinkles or areas of compression in the insulation.
2. Cover circumferential joints with 3-inch- (75-mm-) wide strips, of same material as insulation jacket. Secure strips with adhesive and outward-clinching staples along both edges of strip, spaced 4 inches (100 mm) o.c.
3. For below-ambient services, apply vapor-barrier mastic over staples.
4. Cover joints and seams with tape, in accordance with insulation material manufacturer's written instructions, to maintain vapor seal.
5. Where vapor barriers are indicated, apply vapor-barrier mastic on seams and joints and at ends adjacent to pipe flanges and fittings.

M. Cut insulation in a manner to avoid compressing insulation.

N. Finish installation with systems at operating conditions. Repair joint separations and cracking due to thermal movement.

O. Repair damaged insulation facings by applying same facing material over damaged areas. Extend patches at least 4 inches (100 mm) beyond damaged areas. Adhere, staple, and seal patches in similar fashion to butt joints.

P. For above-ambient services, do not install insulation to the following:

1. Vibration-control devices.
2. Testing agency labels and stamps.
3. Nameplates and data plates.

3.4 GENERAL PIPE INSULATION INSTALLATION

A. Requirements in this article generally apply to all insulation materials, except where more specific requirements are specified in various pipe insulation material installation articles below.

B. Insulation Installation on Fittings, Valves, Strainers, Flanges, Mechanical Couplings, and Unions:

1. Install insulation over fittings, valves, strainers, flanges, mechanical couplings, unions, and other specialties with continuous thermal and vapor-retarder integrity unless otherwise indicated.
2. Insulate pipe elbows using prefabricated fitting insulation or mitered or routed fittings made from same material and density as that of adjacent pipe insulation. Each piece is butted tightly against adjoining piece and bonded with adhesive. Fill joints, seams, voids, and irregular surfaces with insulating cement finished to a smooth, hard, and uniform contour that is uniform with adjoining pipe insulation.
3. Insulate tee fittings with prefabricated fitting insulation or sectional pipe insulation of same material and thickness as that used for adjacent pipe. Cut sectional pipe insulation to fit. Butt each section closely to the next and hold in place with tie wire. Bond pieces with adhesive.
4. Insulate valves using prefabricated fitting insulation or sectional pipe insulation of same material, density, and thickness as that used for adjacent pipe. Overlap adjoining pipe insulation by not less than 2 times the thickness of pipe insulation, or one pipe diameter, whichever is thicker. For valves, insulate up to and including the bonnets, valve stuffing-box studs, bolts, and nuts. Fill joints, seams, and irregular surfaces with insulating cement.
5. Insulate strainers using prefabricated fitting insulation or sectional pipe insulation of same material, density, and thickness as that used for adjacent pipe. Overlap adjoining pipe insulation by not less than 2 times the thickness of pipe insulation, or one pipe diameter, whichever is thicker. Fill joints, seams, and irregular surfaces with insulating cement. Insulate strainers, so strainer basket flange or plug can be easily removed and replaced without damaging the insulation and jacket. Provide a removable reusable insulation cover. For below-ambient services, provide a design that maintains vapor barrier.
6. Insulate flanges, mechanical couplings, and unions using a section of oversized preformed pipe insulation to fit. Overlap adjoining pipe insulation by not less than 2 times the thickness of pipe insulation, or one pipe diameter, whichever is thicker. Stencil or label the outside insulation jacket of each union with the word "union" matching size and color of pipe labels.
7. Cover segmented insulated surfaces with a layer of finishing cement and coat with a mastic. Install vapor-barrier mastic for below-ambient services and a breather mastic for above-ambient services. Reinforce the mastic with reinforcing mesh. Trowel the mastic to a smooth and well-shaped contour.
8. For services not specified to receive a field-applied jacket, except for flexible elastomeric and polyolefin, install fitted PVC cover over elbows, tees, strainers, valves, flanges, and unions. Terminate ends with PVC end caps. Tape PVC covers to adjoining insulation facing, using PVC tape.

C. Insulate instrument connections for thermometers, pressure gages, pressure temperature taps, test connections, flow meters, sensors, switches, and transmitters on insulated pipes. Shape insulation at these connections by tapering it to and around the connection with insulating cement and finish with finishing cement, mastic, and flashing sealant.

3.5 INSTALLATION OF FLEXIBLE ELASTOMERIC INSULATION

A. Seal longitudinal seams and end joints with manufacturer's recommended adhesive to eliminate openings in insulation that allow passage of air to surface being insulated.

B. Insulation Installation on Pipe Flanges:

1. Install pipe insulation to outer diameter of pipe flange.
2. Make width of insulation section same as overall width of flange and bolts, plus twice the thickness of pipe insulation.
3. Fill voids between inner circumference of flange insulation and outer circumference of adjacent straight pipe segments with cut sections of sheet insulation of same thickness as that of pipe insulation.
4. Secure insulation to flanges and seal seams with manufacturer's recommended adhesive to eliminate openings in insulation that allow passage of air to surface being insulated.

C. Insulation Installation on Pipe Fittings and Elbows:

1. Install sections of pipe insulation and miter if required in accordance with manufacturer's written instructions.
2. Secure insulation materials and seal seams with manufacturer's recommended adhesive to eliminate openings in insulation that allow passage of air to surface being insulated.

D. Insulation Installation on Valves and Pipe Specialties:

1. Install prefabricated valve covers manufactured of same material as that of pipe insulation when available.
2. When prefabricated valve covers are not available, install cut sections of pipe and sheet insulation to valve body. Arrange insulation to permit access to packing and to allow valve operation without disturbing insulation.
3. Install insulation to flanges as specified for flange insulation application.
4. Secure insulation to valves and specialties, and seal seams with manufacturer's recommended adhesive to eliminate openings in insulation that allow passage of air to surface being insulated.

3.6 FIELD QUALITY CONTROL

A. Perform tests and inspections with the assistance of a factory-authorized service representative.

B. Tests and Inspections: Inspect pipe, fittings, strainers, and valves, randomly selected by Architect, by removing field-applied jacket and insulation in layers in reverse order of their installation. Extent of inspection is limited to three locations of straight pipe, three locations of threaded fittings, three locations of welded fittings, two locations of threaded strainers, two locations of welded strainers, three locations of threaded valves.

C. All insulation applications will be considered defective if they do not pass tests and inspections.

D. Prepare test and inspection reports.

3.7 OUTDOOR, ABOVEGROUND PIPING INSULATION SCHEDULE

A. Refrigerant Suction and Hot-Gas Piping:

1. All Pipe Sizes: Insulation is the following:

a. Flexible Elastomeric: 2 inches (50 mm) thick.

B. Refrigerant Suction and Hot-Gas Flexible Tubing:

1. All Pipe Sizes: Insulation is the following:

a. Flexible Elastomeric: 2 inches (50 mm) thick.

C. Refrigerant Liquid Piping:

1. All Pipe Sizes: Insulation is the following:

a. Flexible Elastomeric: 2 inches (50 mm)

END OF SECTION 230719

SECTION 230923.27 - TEMPERATURE INSTRUMENTS

PART 1 - GENERAL

1.1 SUMMARY

A. Section Includes:

1. Air temperature sensors.

1.2 ACTION SUBMITTALS

A. Product Data: For the following:

1. Air temperature sensors.

B. Product Data Submittals: For each product.

1. Construction details, material descriptions, dimensions of individual components and profiles, and finishes.
2. Operating characteristics, electrical characteristics, and furnished accessories indicating process operating range, accuracy over range, control signal over range, default control signal with loss of power, calibration data specific to each unique application, electrical power requirements, and limitations of ambient operating environment, including temperature and humidity.
3. Product description with complete technical data, performance curves, and product specification sheets.
4. Installation operation and maintenance instructions, including factors affecting performance.

C. Shop Drawings:

1. Include plans, elevations, sections, and mounting details.
2. Include details of product assemblies. Indicate dimensions, weights, loads, required clearances, method of field assembly, components, and location and size of each field connection.
3. Include diagrams for power, signal, and control wiring.
4. Include number-coded identification system for unique identification of wiring, cable, and tubing ends.

D. Samples: For each exposed product installed in finished space.

1.3 INFORMATIONAL SUBMITTALS

A. Product Certificates: For each product requiring a certificate.

1.4 MAINTENANCE MATERIAL SUBMITTALS

A. Furnish extra materials and parts that match products installed and that are packaged with protective covering for storage and identified with labels describing contents.

PART 2 - PRODUCTS

2.1 PERFORMANCE REQUIREMENTS

A. Environmental Conditions:

1. Instruments shall operate without performance degradation under the ambient environmental temperature, pressure, humidity, and vibration conditions specified and encountered for installed location.

2. Instruments and accessories shall be protected with enclosures satisfying the following minimum requirements unless more stringent requirements are indicated. Instruments not available with integral enclosures complying with requirements indicated shall be housed in protective secondary enclosures. Instrument's installed location shall dictate following NEMA 250 enclosure requirements:
   a. Indoors, Heated and Air Conditioned: Type 1.
   b. Within Duct Systems and Air-Moving Equipment Exposed to Possible Condensation: Type 4.

2.2 AIR TEMPERATURE SENSORS

A. Thermal Resistors (Thermistors): Common requirements:

1. 10,000 ohms at 25 deg C and a temperature coefficient of 23.5 ohms/ohm/deg C.
2. Two-wire, PTFE-insulated, 22-gage stranded copper leads.
3. Performance Characteristics:

   a. Range: Minus 50 to 275 deg F (Minus 46 to 135 deg C).
   b. Interchangeable Accuracy: At 77 deg F (25 deg C) within 0.5 deg F (0.3 deg C).
   c. Repeatability: Within 0.5 deg F (0.3 deg C).
   d. Drift: Within 0.5 deg F (0.3 deg C) over 10 years.
   e. Self-Heating: Negligible.

4. Transmitter optional, contingent on compliance with end-to-end control accuracy.

B. Thermistor, Single-Point Duct Air Temperature Sensors:
1. Temperature Range: Minus 50 to 275 deg F (Minus 45 to 135 deg C).
2. Probe: Single-point sensor with a stainless steel sheath.
3. Length: As required by application to achieve tip at midpoint of air tunnel, up to 18 inches (450 mm) long.
4. Enclosure: Junction box with removable cover; NEMA 250, Type 1 for indoor applications and Type 4 for outdoor applications.
5. Gasket for attachment to duct or equipment to seal penetration airtight.

6. Conduit Connection: 1/2-inch (16-mm) trade size.

C. Thermistor Averaging Air Temperature Sensors:
1. Temperature Range: Minus 50 to 275 deg F (Minus 45 to 135 deg C).
2. Multiple sensors to provide average temperature across entire length of sensor.
3. Rigid probe of aluminum, brass, copper, or stainless steel sheath.
4. Flexible probe of aluminum, brass, copper, or stainless steel sheath and formable to a 4-inch (100-mm) radius.
5. Length: As required by application to cover entire cross section of air tunnel.
6. Enclosure: Junction box with removable cover; NEMA 250, Type 1 for indoor applications and Type 4 for outdoor applications.
7. Gasket for attachment to duct or equipment to seal penetration airtight.
8. Conduit Connection: 1/2-inch (16-mm) trade size.

D. Thermistor Space Air Temperature Sensors:
1. Temperature Range: Minus 50 to 212 deg F (Minus 45 to 100 deg C).
2. Sensor assembly shall include a temperature sensing element mounted under a bright white, non-yellowing, plastic cover.
3. Provide a mounting plate that is compatible with the surface shape that it is mounted to and electrical box used.
4. Concealed wiring connection.

PART 3 - EXECUTION

3.1 EXAMINATION

A. Examine substrates and conditions for compliance with requirements for installation tolerances and other conditions affecting performance of the Work.

B. Examine roughing-in for instruments installed in piping to verify actual locations of connections before installation.

C. Examine roughing-in for instruments installed in duct systems to verify actual locations of connections before installation.

D. Prepare written report, endorsed by Installer, listing conditions detrimental to performance.

E. Proceed with installation only after unsatisfactory conditions have been corrected.

3.2 TEMPERATURE INSTRUMENT APPLICATIONS

A. Air Temperature Sensors:

1. Duct, Thermistor
2. Space, Thermistor

3.3 INSTALLATION, GENERAL

A. Install products level, plumb, parallel, and perpendicular with building construction.

B. Properly support instruments, tubing, piping, wiring, and conduit to comply with requirements indicated. Brace all products to prevent lateral movement and sway or a break in attachment when subjected to a force.

C. Fastening Hardware:

1. Stillson wrenches, pliers, and other tools that cause injury to or mar surfaces of rods, nuts, and other parts are prohibited for work of assembling and tightening nuts.
2. Tighten bolts and nuts firmly and uniformly. Do not overstress threads by excessive force or by oversized wrenches.
3. Lubricate threads of bolts, nuts, and screws with graphite and oil before assembly.

D. Install products in locations that are accessible and that permit calibration and maintenance from floor, equipment platforms, or catwalks. Where ladders are required for Owner's access, confirm unrestricted ladder placement is possible under occupied condition.

E. Corrosive Environments:

1. Use products that are suitable for environment to which they are subjected.
2. If possible, avoid or limit use of materials in corrosive environments.
3. When conduit is in contact with a corrosive environment, use Type 316 stainless steel conduit and fittings or conduit and fittings that are coated with a corrosive-resistant coating that is suitable for environment.
4. Where instruments are located in a corrosive environment and are not corrosive resistant from manufacturer, field install products in a NEMA 250, Type 4X enclosure constructed of Type 316L stainless steel.

3.4 ELECTRICAL CONNECTIONS

A. Furnish and install electrical power to products requiring electrical connections.

B. Furnish and install power wiring. Comply with requirements in Section 260519 "Low-Voltage Electrical Power Conductors and Cables."

3.5 INSTALLATION OF TEMPERATURE INSTRUMENTS

A. Mounting Location:

1. Roughing In:

a. Outline instrument mounting locations before setting instruments and routing cable, wiring, tubing, and conduit to final location.
b. Provide independent inspection to confirm that proposed mounting locations comply with requirements indicated and approved submittals.

1) Indicate dimensioned locations with mounting height for all surface-mounted products on Shop Drawings.
2) Do not begin installation without submittal approval of mounting location.

c. Complete installation rough-in only after confirmation by independent inspection is complete and approval of location is documented for review by Owner and Architect on request.

2. Install switches and transmitters for air and liquid temperature associated with individual air-handling units and associated connected ductwork and piping near air-handling units co-located in air-handling unit system control panel to provide service personnel a single and convenient location for inspection and service.
3. Install liquid and steam temperature switches and transmitters for indoor applications in mechanical equipment rooms. Do not locate in user-occupied space unless indicated specifically on Drawings.
4. Install air temperature switches and transmitters for indoor applications in mechanical equipment rooms. Do not locate in user-occupied space unless indicated specifically on Drawings.
5. Mount switches and transmitters on walls, floor-supported freestanding pipe stands, or floor-supported structural support frames. Use manufacturer's mounting brackets to accommodate field mounting. Securely support and brace products to prevent vibration and movement.

B. Mounting Height:

1. Mount temperature instruments in user-occupied space to match mounting height of light switches unless otherwise indicated on Drawings. Mounting height shall comply with codes and accessibility requirements.
2. Mount switches and transmitters located in mechanical equipment rooms and other similar space not subject to code or state and Federal accessibility requirements within a range of 42 to 72 inches (1.1 to 1.6 m) above the adjacent floor, grade, or service catwalk or platform.

a. Make every effort to mount at 60 inches (1500 mm).

C. Seal penetrations to ductwork, plenums, and air-moving equipment to comply with duct static-pressure class and leakage and seal classes indicated using neoprene gaskets or grommets.

D. Installation of Space Temperature Sensor:

1. Conceal assembly in an electrical box of sufficient size to house sensor and transmitter, if provided.
2. Install electrical box with a faceplate to match sensor cover if sensor cover does not completely cover electrical box.
3. In finished areas, recess electrical box within wall.
4. In unfinished areas, electrical box may be surface mounted if electrical light switches are surface mounted. Use a cast-aluminum electric box for surface-mounted installations.
5. Align electrical box with other electrical devices such as visual alarms and light switches located in the vicinity to provide a neat and well-thought-out arrangement. Where possible, align in both horizontal and vertical axis.

E. Installation of Single-Point Duct Temperature Sensor:

1. Install single-point-type, duct-mounted, supply- and return-air temperature sensors. Install sensors in ducts with sensitive portion of the element installed in center of duct cross section and located to sense near average temperature. Do not exceed 24 inches (610 mm) in sensor length.
2. Install return-air sensor in location that senses return-air temperature without influence from outdoor or mixed air.
3. Rigidly support sensor to duct and seal penetration airtight.
4. If required to have transmitter, mount transmitter remote from sensor at accessible and serviceable location.

F. Installation of Averaging Duct Temperature Sensor:

1. Install averaging-type air temperature sensor for temperature sensors located within air-handling units, similar equipment, and large ducts with air tunnel cross-sectional area of 20 sq. ft. (1.86 sq. m) and larger.
2. Install sensor length to maintain coverage over entire cross-sectional area. Install multiple sensors where required to maintain the minimum coverage.
3. Fasten and support sensor with manufacturer-furnished clips to keep sensor taut throughout entire length.
4. If required to have transmitter, mount transmitter in an accessible and serviceable location.

3.6 IDENTIFICATION

A. Identify system components, wiring, cabling, and terminals. Each piece of wire, cable, and tubing shall have the same designation at each end for operators to determine continuity at points of connection. Comply with requirements for identification specified in Section 260553 "Identification for Electrical Systems."

3.7 CLEANING

A. Remove grease, mastic, adhesives, dust, dirt, stains, fingerprints, labels, and other foreign materials from exposed interior and exterior surfaces.

B. Wash and shine glazing.

C. Polish glossy surfaces to a clean shine.

3.8 CHECK-OUT PROCEDURES

A. Check installed products before continuity tests, leak tests, and calibration.

B. Check temperature instruments for proper location and accessibility.

C. Verify sensing element type and proper material.

D. Verify location and length.

E. Verify that wiring is correct and secure.

3.9 ADJUSTMENT, CALIBRATION, AND TESTING

A. Description:

1. Calibrate each instrument installed that is not factory calibrated and provided with calibration documentation.
2. Provide a written description of proposed field procedures and equipment for calibrating each type of instrument. Submit procedures before calibration and adjustment.
3. For each analog instrument, make a three-point test of calibration for both linearity and accuracy.
4. Equipment and procedures used for calibration shall meet instrument manufacturer's written instructions.
5. Provide diagnostic and test equipment for calibration and adjustment.
6. Field instruments and equipment used to test and calibrate installed instruments shall have accuracy at least twice the instrument accuracy being calibrated. For example, an installed instrument with an accuracy of 1 percent shall be checked by an instrument with an accuracy of 0.5 percent.
7. Calibrate each instrument according to instrument instruction manual supplied by manufacturer.
8. If after calibration indicated performance cannot be achieved, replace out-of-tolerance instruments.
9. Comply with field-testing requirements and procedures indicated by ASHRAE Guideline 11, "Field Testing of HVAC Control Components," in the absence of specific requirements and to supplement requirements indicated.

B. Analog Signals:

1. Check analog voltage signals using a precision voltage meter at zero, 50, and 100 percent.
2. Check analog current signals using a precision current meter at zero, 50, and 100 percent.
3. Check resistance signals for temperature sensors at zero, 50, and 100 percent of operating span using a precision-resistance source.

C. Digital Signals:

1. Check digital signals using a jumper wire.
2. Check digital signals using an ohmmeter to test for contact.

D. Sensors: Check sensors at zero, 50, and 100 percent of Project design values.

E. Switches: Calibrate switches to make or break contact at set points indicated.

F. Transmitters:

1. Check and calibrate transmitters at zero, 50, and 100 percent of Project design values.

2. Calibrate resistance temperature transmitters at zero, 50, and 100 percent of span using a precision-resistance source.

3.10 FIELD QUALITY CONTROL

A. Testing Agency: Engage a qualified testing agency to perform tests and inspections.

B. Manufacturer's Field Service: Engage a factory-authorized service representative to test and inspect components, assemblies, and installations, including connections.

C. Prepare test and inspection reports.

3.11 ADJUSTING

A. Occupancy Adjustments: When requested within 12 months from date of Substantial Completion, provide on-site assistance in adjusting system to suit actual occupied conditions. Provide up to two visits to Project during other-than-normal occupancy hours for this purpose.

3.12 MAINTENANCE SERVICE

A. Maintenance Service: Beginning at Substantial Completion, maintenance service shall include 12 months' full maintenance by manufacturer's authorized service representative. Include annual preventive maintenance, repair or replacement of worn or defective components, cleaning and adjusting as required for proper operation. Parts and supplies shall be manufacturer's authorized replacement parts and supplies.

3.13 DEMONSTRATION

A. Engage a factory-authorized service representative to train Owner's maintenance personnel to adjust, operate, and maintain temperature instruments.

B. Provide a complete set of instructional videos covering each product specified and installed and showing the following:

1. Software programming.
2. Calibration and test procedures.
3. Operation and maintenance requirements and procedures.
4. Troubleshooting procedures.

C. Coordinate video with operation and maintenance manuals and classroom instruction for use by Owner in operating, maintaining, and troubleshooting.

END OF SECTION 230923.27

SECTION 231123 - FACILITY NATURAL-GAS PIPING

1.1 SUMMARY

A. Section Includes:

1. Pipes, tubes, and fittings.
2. Piping specialties.
3. Joining materials.
4. Manual gas shutoff valves.
5. Pressure regulators.
6. Dielectric fittings.

1.2 DEFINITIONS

A. CWP: Cold working pressure.

B. Exposed, Exterior Installations: Exposed to view outdoors or subject to outdoor ambient temperatures and weather conditions. An example includes rooftop locations.

C. Exposed, Interior Installations: Exposed to view indoors. Examples include finished occupied spaces and mechanical equipment rooms.

D. Finished Spaces: Spaces other than mechanical and electrical equipment rooms, furred spaces, pipe and duct shafts, unheated spaces immediately below roof, spaces above ceilings, unexcavated spaces, crawlspaces, and tunnels.

1.3 ACTION SUBMITTALS

A. Product Data:

1. Piping specialties.
2. Corrugated, stainless steel tubing with associated components.
3. Valves. Include pressure rating, capacity, settings, and electrical connection data of selected models.
4. Pressure regulators. Indicate pressure ratings and capacities.
5. Service meters. Indicate pressure ratings and capacities. Include bypass fittings and meter bars.
6. Dielectric fittings.

B. Shop Drawings: For facility natural-gas piping layout. Include plans, piping layout and elevations, sections, and details for fabrication of pipe anchors, hangers, supports for multiple pipes, alignment guides, expansion joints and loops, and attachments of the same to building structure. Detail location of anchors, alignment guides, and expansion joints and loops.

1.4 INFORMATIONAL SUBMITTALS

A. Coordination Drawings: Plans and details, drawn to scale, on which natural-gas piping is shown and coordinated with other installations, using input from installers of the items involved.

B. Field quality-control reports.

1.5 CLOSEOUT SUBMITTALS

A. Operation and Maintenance Data: For pressure regulators and service meters to include in emergency, operation, and maintenance manuals.

1.6 QUALITY ASSURANCE

A. Steel Support Welding Qualifications: Qualify procedures and personnel in accordance with AWS D1.1/D1.1M, "Structural Welding Code - Steel."

B. Pipe Welding Qualifications: Qualify procedures and operators in accordance with the ASME Boiler and Pressure Vessel Code.

1.7 DELIVERY, STORAGE, AND HANDLING

A. Handling Flammable Liquids: Remove and dispose of liquids from existing natural-gas piping in accordance with requirements of authorities having jurisdiction.

B. Deliver pipes and tubes with factory-applied end caps. Maintain end caps through shipping, storage, and handling to prevent pipe end damage and to prevent entrance of dirt, debris, and moisture.

C. Store and handle pipes and tubes having factory-applied protective coatings to avoid damaging coating, and protect from direct sunlight.

D. Protect stored PE pipes and valves from direct sunlight.

1.8 PROJECT CONDITIONS

A. Perform site survey, research public utility records, and verify existing utility locations. Contact utility-locating service for area where Project is located.

B. Interruption of Existing Natural-Gas Service: Do not interrupt natural-gas service to facilities occupied by Owner or others unless permitted under the following conditions, and then only after arranging to provide purging and startup of natural-gas supply in accordance with requirements indicated:

1. Notify Owner no fewer than two days in advance of proposed interruption of natural-gas service.
2. Do not proceed with interruption of natural-gas service without Owner's written permission.

1.9 COORDINATION

A. Coordinate sizes and locations of concrete bases with actual equipment provided.

PART 2 - PRODUCTS

2.1 SOURCE LIMITATIONS

A. Obtain each product type from single source from single manufacturer.

2.2 PERFORMANCE REQUIREMENTS

A. Comply with the International Fuel Gas Code.

B. Minimum Operating-Pressure Ratings:

1. Piping and Valves: 100 psig (690 kPa) minimum unless otherwise indicated.
2. Service Regulators: 65 psig (450 kPa) minimum unless otherwise indicated.
3. Minimum Operating Pressure of Service Meter: 5 psig (34.5 kPa) .

C. Natural-Gas System Pressure within Buildings:

1. Single Pressure: More than 0.5 psig (3.45 kPa), but not more than 2 psig (13.8 kPa).

D. Electrical Components, Devices, and Accessories: Listed and labeled as defined in NFPA 70, by a qualified testing agency, and marked for intended location and application.

1. The term "withstand" means "the piping system will remain in place without separation of any parts from the device when subjected to the seismic forces specified and the piping system will be fully operational after the seismic event."
2. Component Importance Factor: 1.5.

2.3 PIPES, TUBES, AND FITTINGS

A. Steel Pipe: ASTM A53/A53M, black steel, Schedule 40, Type E or S, Grade B.

1. Malleable-Iron Threaded Fittings: ASME B16.3, Class 150, standard pattern.
2. Wrought-Steel Welding Fittings: ASTM A234/A234M for butt welding and socket welding.
3. Unions: ASME B16.39, Class 150, malleable iron with brass-to-iron seat, ground joint, and threaded ends.
4. Forged-Steel Flanges and Flanged Fittings: ASME B16.5, minimum Class 150, including bolts, nuts, and gaskets of the following material group, end connections, and facings:

a. Material Group: 1.1.
b. End Connections: Threaded or butt welding to match pipe.
c. Lapped Face: Not permitted underground.

d. Gasket Materials: ASME B16.20, metallic, flat, asbestos free, aluminum O-rings, and spiral-wound metal gaskets.
e. Bolts and Nuts: ASME B18.2.1, carbon steel aboveground and stainless-steel underground.

5. Mechanical Couplings:
   a. Stainless steel flanges and tube with epoxy finish.
   b. NBR seals.
   c. Stainless steel bolts, washers, and nuts.
   d. Coupling is to be capable of joining PE pipe to PE pipe, steel pipe to PE pipe, or steel pipe to steel pipe.
   e. Steel body couplings installed underground on plastic pipe are to be factory equipped with anode.

B. Corrugated, Stainless Steel Tubing: Comply with ANSI/IAS LC 1/CSA 6.26.
1. Tubing: ASTM A240/A240M, corrugated, Series 300 stainless steel.
2. Coating: PE with flame retardant.

   a. Surface-Burning Characteristics: As determined by testing identical products in accordance with ASTM E84 by qualified testing agency. Identify products with appropriate markings of applicable testing agency.

      1) Flame-Spread Index: 25 or less.
      2) Smoke-Developed Index: 50or less.

3. Fittings: Copper-alloy mechanical fittings with ends made to fit and listed for use with corrugated stainless-steel tubing and capable of metal-to-metal seal without gaskets. Include brazing socket or threaded ends complying with ASME B1.20.1.
4. Striker Plates: Steel, designed to protect tubing from penetrations.
5. Manifolds: Malleable iron or steel with factory-applied protective coating. Threaded connections are to comply with ASME B1.20.1 for pipe inlet and corrugated tubing outlets.
6. Operating-Pressure Rating: 5 psig (34.5 kPa).
7. Flare Fittings: Comply with ASME B16.26 and SAE J513.

   a. Copper fittings with long nuts.
   b. Metal-to-metal compression seal without gasket.
   c. Dryseal threads complying with ASME B1.20.3.

2.4 PIPING SPECIALTIES

A. Appliance Flexible Connectors:

1. Indoor, Fixed-Appliance Flexible Connectors: Comply with ANSI Z21.24.
2. Indoor, Movable-Appliance Flexible Connectors: Comply with ANSI Z21.69.
3. Outdoor, Appliance Flexible Connectors: Comply with ANSI Z21.75.
4. Corrugated, stainless steel tubing with polymer coating.
5. Operating-Pressure Rating: 0.5 psig (3.45 kPa).
6. End Fittings: Zinc-coated steel.
7. Threaded Ends: Comply with ASME B1.20.1.

8. Maximum Length: 72 inches (1830 mm).

B. Quick-Disconnect Devices: Comply with ANSI Z21.41.

1. Copper-alloy convenience outlet and matching plug connector.
2. Seals: Nitrile.
3. Hand operated with automatic shutoff when disconnected.
4. For indoor or outdoor applications.
5. Adjustable, retractable restraining cable.

C. Y-Pattern Strainers:

1. Body: ASTM A126, Class B, cast iron with bolted cover and bottom drain connection.
2. End Connections: Threaded ends for NPS 2 (DN 50) and smaller; flanged ends for NPS 2-1/2 (DN 65) and larger.
3. Strainer Screen: 40-mesh startup strainer, and perforated stainless steel basket with 50 percent free area.
4. CWP Rating: 125 psig (862 kPa).

2.5 JOINING MATERIALS

A. Joint Compound and Tape: Suitable for natural gas.

B. Welding Filler Metals: Comply with AWS D10.12/D10.12M for welding materials appropriate for wall thickness and chemical analysis of steel pipe being welded.

2.6 MANUAL GAS SHUTOFF VALVES

A. General Requirements for Metallic Valves, NPS 2 (DN 50) and Smaller: Comply with ASME B16.33.

1. CWP Rating: 125 psig (862 kPa).
2. Threaded Ends: Comply with ASME B1.20.1.
3. Dryseal Threads on Flare Ends: Comply with ASME B1.20.3.
4. Tamperproof Feature: Locking feature for valves indicated in "Underground, Manual Gas Shutoff Valve Schedule" and "Aboveground, Manual Gas Shutoff Valve Schedule" articles.
5. Listed and labeled by an NRTL acceptable to authorities having jurisdiction for valves 1 inch (25 mm) and smaller.
6. Service Mark: Valves NPS 1-1/4 to NPS 2 (DN 32 to DN 50) having initials "WOG" permanently marked on valve body.

B. General Requirements for Metallic Valves, NPS 2-1/2 (DN 65) and Larger: Comply with ASME B16.38.

1. CWP Rating: 125 psig (862 kPa).
2. Flanged Ends: Comply with ASME B16.5 for steel flanges.

3. Tamperproof Feature: Locking feature for valves indicated in "Underground, Manual Gas Shutoff Valve Schedule" and "Aboveground, Manual Gas Shutoff Valve Schedule" articles.
4. Service Mark: Initials "WOG" permanently marked on valve body.

C. One-Piece, Bronze Ball Valve with Bronze Trim: MSS SP-110.
1. Body: Bronze, complying with ASTM B584.
2. Ball: Chrome-plated brass.
3. Stem: Bronze; blowout proof.
4. Seats: Reinforced TFE; blowout proof.
5. Packing: Separate packnut with adjustable-stem packing threaded ends.
6. Ends: Threaded, flared, or socket as indicated in "Underground, Manual Gas Shutoff Valve Schedule" and "Aboveground, Manual Gas Shutoff Valve Schedule" articles.
7. CWP Rating: 600 psig (4140 kPa).
8. Listing: Valves NPS 1 (DN 25) and smaller are to be listed and labeled by an NRTL acceptable to authorities having jurisdiction.
9. Service: Suitable for natural-gas service with "WOG" indicated on valve body.

D. Two-Piece, Full-Port, Bronze Ball Valves with Bronze Trim: MSS SP-110.
1. Body: Bronze, complying with ASTM B584.
2. Ball: Chrome-plated bronze.
3. Stem: Bronze; blowout proof.
4. Seats: Reinforced TFE; blowout proof.
5. Packing: Threaded-body packnut design with adjustable-stem packing.
6. Ends: Threaded, flared, or socket as indicated in "Underground, Manual Gas Shutoff Valve Schedule" and "Aboveground, Manual Gas Shutoff Valve Schedule" articles.
7. CWP Rating: 600 psig (4140 kPa).
8. Listing: Valves NPS 1 (DN 25) and smaller are to be listed and labeled by an NRTL acceptable to authorities having jurisdiction.
9. Service: Suitable for natural-gas service with "WOG" indicated on valve body.

E. Two-Piece, Regular-Port Bronze Ball Valves with Bronze Trim: MSS SP-110.
1. Body: Bronze, complying with ASTM B584.
2. Ball: Chrome-plated bronze.
3. Stem: Bronze; blowout proof.
4. Seats: Reinforced TFE.
5. Packing: Threaded-body packnut design with adjustable-stem packing.
6. Ends: Threaded, flared, or socket as indicated in "Underground, Manual Gas Shutoff Valve Schedule" and "Aboveground, Manual Gas Shutoff Valve Schedule" articles.
7. CWP Rating: 600 psig (4140 kPa).
8. Listing: Valves NPS 1 (DN 25) and smaller are to be listed and labeled by an NRTL acceptable to authorities having jurisdiction.
9. Service: Suitable for natural-gas service with "WOG" indicated on valve body.

2.7 PRESSURE REGULATORS

A. General Requirements:

1. Single stage and suitable for natural gas.
2. Steel jacket and corrosion-resistant components.

3. Elevation compensator.
4. End Connections: Threaded for regulators NPS 2 (DN 50) and smaller; flanged for regulators NPS 2-1/2 (DN 65) and larger.

B. Service Pressure Regulators: Comply with ANSI Z21.80A.
1. Body and Diaphragm Case: Cast iron or die-cast aluminum.
2. Springs: Zinc-plated steel; interchangeable.
3. Diaphragm Plate: Zinc-plated steel.
4. Seat Disc: NBR; resistant to gas impurities, abrasion, and deformation at the valve port.
5. Orifice: Aluminum; interchangeable.
6. Seal Plug: UV-stabilized, mineral-filled nylon.
7. Single-port, self-contained regulator with orifice no larger than required at maximum pressure inlet, and no pressure sensing piping external to regulator.
8. Pressure regulator is to maintain discharge pressure setting downstream and is to not exceed 150 percent of design discharge pressure at shutoff.
9. Overpressure Protection Device: Factory mounted on pressure regulator.
10. Atmospheric Vent: Factory- or field-installed, stainless steel screen in opening if not connected to vent piping.
11. Maximum Inlet Pressure: 100 psig (690 kPa).

C. Line Pressure Regulators: Comply with ANSI Z21.80A.
1. Body and Diaphragm Case: Cast iron or die-cast aluminum.
2. Springs: Zinc-plated steel; interchangeable.
3. Diaphragm Plate: Zinc-plated steel.
4. Seat Disc: NBR; resistant to gas impurities, abrasion, and deformation at the valve port.
5. Orifice: Aluminum; interchangeable.
6. Seal Plug: UV-stabilized, mineral-filled nylon.
7. Single-port, self-contained regulator with orifice no larger than required at maximum pressure inlet, and no pressure sensing piping external to regulator.
8. Pressure regulator is to maintain discharge pressure setting downstream and is to not exceed 150 percent of design discharge pressure at shutoff.
9. Overpressure Protection Device: Factory mounted on pressure regulator.
10. Atmospheric Vent: Factory- or field-installed, stainless steel screen in opening if not connected to vent piping.
11. Maximum Inlet Pressure: 5 psig (34.5 kPa).

D. Appliance Pressure Regulators: Comply with ANSI Z21.18.
1. Body and Diaphragm Case: Die-cast aluminum.
2. Springs: Zinc-plated steel; interchangeable.
3. Diaphragm Plate: Zinc-plated steel.
4. Seat Disc: NBR.
5. Seal Plug: UV-stabilized, mineral-filled nylon.
6. Factory-Applied Finish: Minimum three-layer polyester and polyurethane paint finish.
7. Regulator may include vent limiting device, instead of vent connection, if approved by authorities having jurisdiction.
8. Maximum Inlet Pressure: 5 psig (34.5 kPa).

2.8 DIELECTRIC FITTINGS

A. General Requirements: Assembly of copper alloy and ferrous materials with separating nonconductive insulating material. Include end connections compatible with pipes to be joined.

B. Dielectric Unions:
1. Description:

a. Standard: ASSE 1079.
b. Pressure Rating: 125 psig (860 kPa) minimum at 180 deg F (82 deg C).
c. End Connections: Solder-joint copper alloy and threaded ferrous.

2.9 LABELING AND IDENTIFYING

A. Detectable Warning Tape: Acid- and alkali-resistant, PE film warning tape manufactured for marking and identifying underground utilities, a minimum of 6 inches (150 mm) wide and 4 mils (0.1 mm) thick, continuously inscribed with a description and rated pressure of utility, with metallic core encased in a protective jacket for corrosion protection, detectable by metal detector when tape is buried up to 30 inches (750 mm) deep; colored yellow.

B. Label and identify gas piping and pressure outside a multitenant building by tenant.

PART 3 - EXECUTION

3.1 EXAMINATION

A. Examine roughing-in for natural-gas piping system to verify actual locations of piping connections before equipment installation.

B. Proceed with installation only after unsatisfactory conditions have been corrected.

3.2 PREPARATION

A. Close equipment shutoff valves before turning off natural gas to premises or piping section.

B. Inspect natural-gas piping in accordance with the International Fuel Gas Code to determine that natural-gas utilization devices are turned off in piping section affected.

C. Comply with the International Fuel Gas Code requirements for preventing accidental ignition.

3.3 INSTALLATION OF INDOOR PIPING

A. Comply with the International Fuel Gas Code for installation and purging of natural-gas piping.

B. Drawing plans, schematics, and diagrams indicate general location and arrangement of piping systems. Indicated locations and arrangements are used to size pipe and calculate friction loss,

expansion, and other design considerations. Install piping as indicated unless deviations to layout are approved on Coordination Drawings.

C. Arrange for pipe spaces, chases, slots, sleeves, and openings in building structure during progress of construction, to allow for mechanical installations.

D. Do not install piping in concealed locations unless sleeved with the sleeve open at both ends.

E. Install piping indicated to be exposed and piping in equipment rooms and service areas at right angles or parallel to building walls. Diagonal runs are prohibited unless specifically indicated otherwise.

F. Where installing piping above accessible ceilings, allow sufficient space for ceiling panel removal.

G. Locate valves for easy access. Do not locate valves within return air plenums.

H. Install natural-gas piping at uniform grade of 2 percent down toward drip and sediment traps.

I. Install piping free of sags and bends.

J. Install fittings for changes in direction and branch connections.

K. Verify final equipment locations for roughing-in.

L. Comply with requirements in Sections specifying gas-fired appliances and equipment for roughing-in requirements.

M. Drips and Sediment Traps: Install drips at points where condensate may collect, including service-meter outlets. Locate where accessible to permit cleaning and emptying. Do not install where condensate is subject to freezing.

1. Construct drips and sediment traps using tee fitting with bottom outlet plugged or capped. Use nipple a minimum length of 3 pipe diameters, but not less than 3 inches (75 mm) long and same size as connected pipe. Install with space below bottom of drip to remove plug or cap.
2. Install sediment trap on both sides of regulators for gas reduction to 2 psig (13.8 kPa) with valve and cap.

N. Extend relief vent connections for service regulators, line regulators, and overpressure protection devices to outdoors and terminate with weatherproof vent cap.

O. Conceal pipe installations in walls, pipe spaces, utility spaces, above ceilings, below grade or floors, and in floor channels unless indicated to be exposed to view.

P. Concealed Location Installations: Except as specified below, install concealed natural-gas piping and piping installed under the building in containment conduit constructed of steel pipe with welded joints as described in Part 2. Install a vent pipe from containment conduit to outdoors and terminate with weatherproof vent cap.

1. Above Accessible Ceilings: Natural-gas piping, fittings, valves, and regulators may be installed in accessible spaces without containment conduit.
2. In Floors: Install natural-gas piping with welded or brazed joints and protective coating in cast-in-place concrete floors. Cover piping to be cast in concrete slabs with minimum of 1-1/2 inches (38 mm) of concrete. Piping may not be in physical contact with other metallic structures such as reinforcing rods or electrically neutral conductors. Do not embed piping in concrete slabs containing quick-set additives or cinder aggregate.

3. Prohibited Locations:

    a. Do not install natural-gas piping in or through circulating air ducts, clothes or trash chutes, chimneys or gas vents (flues), ventilating ducts, or dumbwaiter or elevator shafts.
    b. Do not install natural-gas piping in solid walls or partitions.

Q. Use eccentric reducer fittings to make reductions in pipe sizes. Install fittings with level side down.

R. Connect branch piping from top or side of horizontal piping.

S. Install unions in pipes NPS 2 (DN 50) and smaller, adjacent to each valve, at final connection to each piece of equipment. Unions are not required at flanged connections.

T. Do not use natural-gas piping as grounding electrode.

U. Install strainer on inlet of each line-pressure regulator and automatic or electrically operated valve.

3.4 INSTALLATION OF VALVES

A. Install manual gas shutoff valve for each gas appliance ahead of corrugated stainless steel tubing, aluminum, or copper connector.

B. Install regulators and overpressure protection devices with maintenance access space adequate for servicing and testing.

C. Do not install valves in return-air plenums.

3.5 PIPING JOINT CONSTRUCTION

A. Ream ends of pipes and tubes and remove burrs.

B. Remove scale, slag, dirt, and debris from inside and outside of pipe and fittings before assembly.

C. Threaded Joints:

1. Thread pipe with tapered pipe threads complying with ASME B1.20.1.
2. Cut threads full and clean using sharp dies.

3. Ream threaded pipe ends to remove burrs and restore full inside diameter of pipe.
4. Apply appropriate tape or thread compound to external pipe threads unless dryseal threading is specified.
5. Damaged Threads: Do not use pipe or pipe fittings with threads that are corroded or damaged. Do not use pipe sections that have cracked or open welds.

D. Welded Joints:

1. Construct joints in accordance with AWS D10.12/D10.12M, using qualified processes and welding operators.
2. Bevel plain ends of steel pipe.
3. Patch factory-applied protective coating as recommended by manufacturer at field welds and where damage to coating occurs during construction.

E. Flanged Joints: Install gasket material, size, type, and thickness appropriate for natural-gas service. Install gasket concentrically positioned.

3.6 INSTALLATION OF HANGERS AND SUPPORTS

A. Comply with requirements for seismic-restraint devices specified in Section 230548 "Vibration and Seismic Controls for HVAC."

B. Comply with requirements in Section 230529 "Hangers and Supports for HVAC Piping and Equipment" for hangers, supports, and anchor devices.

C. Install hangers for steel piping with maximum horizontal spacing and minimum rod diameters, to comply with MSS SP-58, locally enforced codes, and authorities having jurisdiction requirements, whichever are most stringent.

D. Install hangers for corrugated stainless steel tubing, with maximum horizontal spacing and minimum rod diameters, to comply with manufacturer's written instructions, locally enforced codes, and authorities having jurisdiction requirements, whichever are most stringent.

E. Support horizontal piping within 12 inches (300 mm) of each fitting.

F. Support vertical runs of steel piping to comply with MSS SP-58, locally enforced codes, and authorities having jurisdiction requirements, whichever are most stringent.

G. Support vertical runs of corrugated stainless steel tubing to comply with manufacturer's written instructions, locally enforced codes, and authorities having jurisdiction requirements, whichever are most stringent.

3.7 PIPING CONNECTIONS

A. Connect to utility's gas main according to utility's procedures and requirements.

B. Install natural-gas piping electrically continuous, and bonded to gas-appliance equipment grounding conductor of the circuit powering the appliance in accordance with NFPA 70.

C. Where installing piping adjacent to appliances, allow space for service and maintenance of appliances.

D. Connect piping to appliances using manual gas shutoff valves and unions. Install valve within 72 inches (1800 mm) of each gas-fired appliance and equipment. Install union between valve and appliances or equipment.

3.8 LABELING AND IDENTIFICATION

A. Install detectable warning tape directly above gas piping, 12 inches (300 mm) below finished grade, except 6 inches (150 mm) below subgrade under pavements and slabs.

3.9 CONCRETE BASES

A. Concrete Bases: Anchor equipment to concrete base in accordance with seismic codes at Project. See Section 230548 "Vibration and Seismic Controls for HVAC."

1. Construct concrete bases of dimensions indicated, but not less than 4 inches (100 mm) larger in both directions than supported unit.
2. Install dowel rods to connect concrete base to concrete floor. Unless otherwise indicated, install dowel rods on 18-inch (450-mm) centers around the full perimeter of the base.
3. Install epoxy-coated anchor bolts for supported equipment that extend through concrete base, and anchor into structural concrete floor.
4. Place and secure anchorage devices. Use supported equipment manufacturer's setting drawings, templates, diagrams, instructions, and directions furnished with items to be embedded.
5. Install anchor bolts to elevations required for proper attachment to supported equipment.
6. Use 3000 psig (20.7 MPa), 28-day, compressive-strength concrete and reinforcement as specified in Section 033000 "Cast-in-Place Concrete."

3.10 FIELD QUALITY CONTROL

A. Tests and Inspections:

1. Test, inspect, and purge natural gas in accordance with the International Fuel Gas Code and authorities having jurisdiction.
2. Natural-gas piping will be considered defective if it does not pass tests and inspections.

B. Prepare test and inspection reports.

END OF SECTION 231123

SECTION 232300 - REFRIGERANT PIPING

PART 1 - GENERAL

1.1 SUMMARY

A. Section Includes:

1. Copper tube and fittings.
2. Valves and specialties.
3. Refrigerants.

1.2 ACTION SUBMITTALS

A. Product Data: For the following:

1. Solenoid valves.
2. Thermostatic expansion valves.
3. Hot-gas bypass valves.
4. Strainers.
5. Filter dryers.
6. Pressure-regulating valves.

B. Product Data Submittals: For each product.

1. Submit data for each type of refrigerant piping, fitting, valve, piping specialty, and refrigerant.

C. Delegated Design Submittals: For refrigerant piping size and layout, including oil traps, double risers, specialties, and pipe and tube sizes to accommodate, as a minimum, equipment provided, elevation difference between compressor and evaporator, and length of piping to ensure proper operation and compliance with warranties of connected equipment.

D. Shop Drawings:

1. Show piping size and piping layout, including oil traps, double risers, specialties, and pipe and tube sizes to accommodate, as a minimum, equipment provided, elevation difference between compressor and evaporator, and length of piping to ensure proper operation and compliance with warranties of connected equipment.
2. Show interface and spatial relationships between piping and equipment.

1.3 INFORMATIONAL SUBMITTALS

A. Field Quality-Control Reports: For each field quality control test and inspection.

1.4 CLOSEOUT SUBMITTALS

A. Operation and Maintenance Data: For refrigerant valves and piping specialties to include in maintenance manuals.

1.5 QUALITY ASSURANCE

A. Welding Qualifications: Qualify procedures and personnel according to ASME Boiler and Pressure Vessel Code: Section IX, "Welding, Brazing, and Fusing Qualifications."

1.6 DELIVERY, STORAGE, AND HANDLING

A. Store piping with end caps in place to ensure that piping interior and exterior are clean when installed.

B. Prepare valves and specialties for shipping as follows:

1. Protect internal parts against rust and corrosion.
2. Protect threads and other end connections.

C. Use the following precautions during storage:

1. Maintain valve and specialty end protection.
2. Store valves and specialties indoors and maintain at higher-than-ambient-dew-point temperature. If outdoor storage is necessary, store valves off the ground in watertight enclosures.

PART 2 - PRODUCTS

2.1 PERFORMANCE REQUIREMENTS

A. Test Pressure for Refrigerant R-410A:

1. Suction Tubing for Refrigeration and Air-Conditioning Applications Other than Heat Pumps: 300 psig (2068 kPa).
2. Suction Tubing for Heat-Pump Applications: 535 psig (3689 kPa).
3. Hot-Gas and Tubing Lines: 535 psig (3689 kPa).

2.2 COPPER TUBE AND FITTINGS

A. Copper Tube: ASTM B88, Type K or L (ASTM B88M, Type A or B).

B. Wrought-Copper Fittings, Solder Joint: ASME B16.22.

C. Wrought-Copper Fittings, Brazed Joint: ASME B16.50.

D. Wrought-Copper Unions: ASME B16.22.

E. Solder Filler Metals: ASTM B32. Use 95-5 tin antimony or alloy HB solder to join copper socket fittings on copper pipe.

F. Brazing Filler Metals: AWS A5.8M/A5.8.

G. Flexible Connectors:

1. Body: Tin-bronze bellows with woven, flexible, tinned-bronze-wire-reinforced protective jacket.
2. End Connections: Socket ends.
3. Offset Performance: Capable of minimum 3/4-inch (20-mm) misalignment in minimum 7-inch- (180-mm-) long assembly.
4. Working Pressure Rating: Factory test at minimum 500 psig (3450 kPa).
5. Maximum Operating Temperature: 250 deg F (121 deg C).

H. Copper-Tube, Pressure-Seal-Joint Fittings for Refrigerant Piping:
1. Standard: UL 207; certified by UL for field installation. Certification as a UL-recognized component alone is unacceptable.
2. Housing: Copper.
3. O-Rings: HNBR compatible with specific refrigerant.
4. Tools: Manufacturer's approved special tools.
5. Minimum Rated Pressure: 700 psig (48 bar).

2.3 VALVES AND SPECIALTIES

A. Diaphragm Packless Valves:
1. Body and Bonnet: Forged brass or cast bronze; globe design with straight-through or angle pattern.
2. Diaphragm: Phosphor bronze and stainless steel with stainless steel spring.
3. Operator: Rising stem and hand wheel.
4. Seat: Nylon.
5. End Connections: Socket, union, or flanged.
6. Working Pressure Rating: 500 psig (3450 kPa).
7. Maximum Operating Temperature: 240 deg F (116 deg C).

B. Check Valves:
1. Body: Ductile iron, forged brass, or cast bronze; globe pattern.
2. Bonnet: Bolted ductile iron, forged brass, or cast bronze; or brass hex plug.
3. Piston: Removable polytetrafluoroethylene seat.
4. Closing Spring: Stainless steel.
5. Manual Opening Stem: Seal cap, plated-steel stem, and graphite seal.
6. End Connections: Socket, union, threaded, or flanged.
7. Maximum Opening Pressure: 0.50 psig (3.4 kPa).
8. Working Pressure Rating: 500 psig (3450 kPa).
9. Maximum Operating Temperature: 275 deg F (135 deg C).

C. Service Valves:
1. Body: Forged brass with brass cap, including key end to remove core.
2. Core: Removable ball-type check valve with stainless steel spring.
3. Seat: Polytetrafluoroethylene.

4. End Connections: Copper spring.
5. Working Pressure Rating: 500 psig (3450 kPa).
6. Maximum Operating Temperature: 275 deg F (135 deg C).

D. Refrigerant Locking Caps:
1. Description: Locking-type, tamper-resistant, threaded caps to protect refrigerant-charging ports from unauthorized refrigerant access and leakage.
2. Material: Brass, with protective shroud or sleeve.
3. Refrigerant Identification: Color-coded, refrigerant specific based on AHRI Guideline N or Universal design.
4. Special Tool: For installing and unlocking.

E. Solenoid Valves: Comply with AHRI 760 I-P (AHRI 761 SI) and UL 429; listed and labeled by an NRTL.
1. Body and Bonnet: Plated steel.
2. Solenoid Tube, Plunger, Closing Spring, and Seat Orifice: Stainless steel.
3. Seat: Polytetrafluoroethylene.
4. End Connections: Threaded.
5. Electrical: Molded, watertight coil in NEMA 250 enclosure of type required by location with 1/2-inch (16-mm) conduit adapter, and 115 V ac coil.
6. Working Pressure Rating: 400 psig (2760 kPa).
7. Maximum Operating Temperature: 240 deg F (116 deg C).

F. Safety Relief Valves: Comply with ASME Boiler and Pressure Vessel Code; listed and labeled by an NRTL.
1. Body and Bonnet: Ductile iron and steel, with neoprene O-ring seal.
2. Piston, Closing Spring, and Seat Insert: Stainless steel.
3. Seat: Polytetrafluoroethylene.
4. End Connections: Threaded.
5. Working Pressure Rating: 400 psig (2760 kPa).
6. Maximum Operating Temperature: 240 deg F (116 deg C).

G. Thermostatic Expansion Valves: Comply with AHRI 750 I-P (AHRI 751 SI).
1. Body, Bonnet, and Seal Cap: Forged brass or steel.
2. Diaphragm, Piston, Closing Spring, and Seat Insert: Stainless steel.
3. Packing and Gaskets: Non-asbestos.
4. Capillary and Bulb: Copper tubing filled with refrigerant charge.
5. Suction Temperature: 40 deg F (4.4 deg C).
6. Superheat: Adjustable.
7. Reverse-flow option (for heat-pump applications).
8. End Connections: Socket, flare, or threaded union.

H. Hot-Gas Bypass Valves: Comply with UL 429; listed and labeled by an NRTL.
1. Body, Bonnet, and Seal Cap: Ductile iron or steel.
2. Diaphragm, Piston, Closing Spring, and Seat Insert: Stainless steel.
3. Packing and Gaskets: Non-asbestos.
4. Solenoid Tube, Plunger, Closing Spring, and Seat Orifice: Stainless steel.
5. Seat: Polytetrafluoroethylene.
6. Electrical: Molded, watertight coil in NEMA 250 enclosure of type required by location with 1/2-inch (16-GRC) conduit adapter and 115 V ac coil.
7. End Connections: Socket.

8. Throttling Range: Maximum 5 psig (34 kPa).
9. Maximum Operating Temperature: 240 deg F (116 deg C).

I. Straight-Type Strainers:
1. Body: Welded steel with corrosion-resistant coating.
2. Screen: 100-mesh stainless steel.
3. End Connections: Socket or flare.
4. Maximum Operating Temperature: 275 deg F (135 deg C).

J. Angle-Type Strainers:
1. Body: Forged brass or cast bronze.
2. Drain Plug: Brass hex plug.
3. Screen: 100-mesh monel.
4. End Connections: Socket or flare.
5. Maximum Operating Temperature: 275 deg F (135 deg C).

K. Moisture/Liquid Indicators:
1. Body: Forged brass.
2. Window: Replaceable, clear, fused glass window with indicating element protected by filter screen.
3. Indicator: Color-coded to show moisture content in parts per million (ppm).
4. Minimum Moisture Indicator Sensitivity: Indicate moisture above 60 ppm.
5. End Connections: Socket or flare.
6. Maximum Operating Temperature: 240 deg F (116 deg C).

L. Replaceable-Core Filter Dryers: Comply with AHRI 730 I-P (AHRI 731 SI).
1. Body and Cover: Painted-steel shell with ductile-iron cover, stainless steel screws, and neoprene gaskets.
2. Filter Media: 10 micron, pleated with integral end rings; stainless steel support.
3. Desiccant Media: Activated charcoal.
4. Access Ports: NPS 1/4 (DN 8) connections at entering and leaving sides for pressure differential measurement.
5. Maximum Pressure Loss: 2 psig (14 kPa).
6. Working Pressure Rating: 500 psig (3450 kPa).
7. Maximum Operating Temperature: 240 deg F (116 deg C).

M. Permanent Filter Dryers: Comply with AHRI 730 I-P (AHRI 731 SI).
1. Body and Cover: Painted-steel shell.
2. Filter Media: 10 micron, pleated with integral end rings; stainless steel support.
3. Desiccant Media: Activated alumina.

2.4 REFRIGERANTS

A. R-410A, ASHRAE 34: Pentafluoroethane/Difluoromethane.

PART 3 - EXECUTION

3.1 PIPING APPLICATION SCHEDULES

A. Refrigerant: R-410A

B. Suction, Hot-Gas, and Liquid Tubing for Conventional Air-Conditioning (Cooling-Only) Applications, NPS 1-1/2 (DN 40) and Smaller: Copper, Type ACR, annealed-temper tubing and wrought-copper fittings with brazed or soldered joints.

C. Safety-Relief-Valve Discharge Tubing for Conventional Air-Conditioning (Cooling-Only) Applications, Copper: Type ACR, drawn-temper or annealed-temper tubing and wrought-copper fittings with brazed or soldered joints.

3.2 VALVE AND SPECIALTY APPLICATIONS

A. Install diaphragm packless valves in suction and discharge lines of compressor.

B. Install service valves for gauge taps at inlet and outlet of hot-gas bypass valves and strainers if they are not an integral part of valves and strainers.

C. Install a check valve at the compressor discharge and a liquid accumulator at the compressor suction connection.

D. Except as otherwise indicated, install diaphragm packless valves on inlet and outlet side of filter dryers.

E. Install a full-size, three-valve bypass around filter dryers.

F. Install solenoid valves upstream from each expansion valve and hot-gas bypass valve. Install solenoid valves in horizontal lines with coil at top.

G. Install thermostatic expansion valves as close as possible to distributors on evaporators.

1. Install valve so diaphragm case is warmer than bulb.
2. Secure bulb to clean, straight, horizontal section of suction line using two bulb straps. Do not mount bulb in a trap or at bottom of the line.
3. If external equalizer lines are required, make connection where it will reflect suction-line pressure at bulb location.

H. Install safety-relief valves where required by ASME Boiler and Pressure Vessel Code. Pipe safety-relief-valve discharge line to outside in accordance with ASHRAE 15.

I. Install moisture/liquid indicators in liquid line at the inlet of the thermostatic expansion valve or at the inlet of the evaporator coil capillary tube.

J. Install strainers upstream from and adjacent to the following unless they are furnished as an integral assembly for the device being protected:

1. Solenoid valves.

2. Thermostatic expansion valves.
3. Hot-gas bypass valves.
4. Compressor.

K. Install filter dryers in liquid line between compressor and thermostatic expansion valve, and in the suction line at the compressor.

L. Install receivers sized to accommodate pump-down charge.

M. Install flexible connectors at compressors.

N. Provide refrigerant locking caps on refrigerant charging ports that are located outdoors unless otherwise protected from unauthorized access by a means acceptable to authority having jurisdiction.

3.3 INSTALLATION OF PIPING, GENERAL

A. Drawing plans, schematics, and diagrams indicate general location and arrangement of piping systems; indicated locations and arrangements were used to size pipe and calculate friction loss, expansion, pump sizing, and other design considerations. Install piping as indicated unless deviations to layout are approved on Shop Drawings.

B. Install refrigerant piping in accordance with ASHRAE 15.

C. Install piping in concealed locations unless otherwise indicated and except in equipment rooms and service areas.

D. Install piping indicated to be exposed and piping in equipment rooms and service areas at right angles or parallel to building walls. Diagonal runs are prohibited unless specifically indicated otherwise.

E. Install piping above accessible ceilings to allow sufficient space for ceiling panel removal.

F. Install piping adjacent to machines to allow service and maintenance.

G. Install piping free of sags and bends.

H. Install fittings for changes in direction and branch connections.

I. Select system components with pressure rating equal to or greater than system operating pressure.

J. Install piping as short and direct as possible, with a minimum number of joints, elbows, and fittings.

K. Install refrigerant piping in rigid or flexible conduit in locations where exposed to mechanical injury.

L. Slope refrigerant piping as follows:

1. Install horizontal hot-gas discharge piping with a uniform slope downward away from compressor.
2. Install horizontal suction lines with a uniform slope downward to compressor.
3. Install traps and double risers to entrain oil in vertical runs.
4. Liquid lines may be installed level.

M. When brazing or soldering, remove solenoid-valve coils and sight glasses; also remove valve stems, seats, packing, and accessible internal parts of refrigerant specialties. Do not apply heat near expansion-valve bulb.

N. Install piping with adequate clearance between pipe and adjacent walls and hangers or between pipes for insulation installation.

3.4 PIPE JOINT CONSTRUCTION

A. Ream ends of pipes and tubes and remove burrs.

B. Remove scale, slag, dirt, and debris from inside and outside of pipe and fittings before assembly.

C. Fill pipe and fittings with an inert gas (nitrogen or carbon dioxide), during brazing or welding, to prevent scale formation.

D. Soldered Joints: Construct joints in accordance with ASTM B828 or CDA's "Copper Tube Handbook."

E. Brazed Joints: Construct joints in accordance with AWS BRH, "Brazing Handbook," Ch. 35, "Pipe and Tubing."

1. Use Type BCuP (copper-phosphorus) alloy for joining copper socket fittings with copper pipe.
2. Use Type BAg (cadmium-free silver) alloy for joining copper with bronze or steel.
3. Apply appropriate tape or thread compound to external pipe threads unless dry-seal threading is specified.
4. Damaged Threads: Do not use pipe or pipe fittings with threads that are corroded or damaged. Do not use pipe sections that have cracked or open welds.

F. Welded Joints: Construct joints in accordance with AWS D10.12M/D10.12.

3.5 INSTALLATION OF HANGERS AND SUPPORTS

A. Comply with requirements for seismic restraints in Section 230548 "Vibration and Seismic Controls for HVAC."

B. Comply with Section 230529 "Hangers and Supports for HVAC Piping and Equipment" for hangers, supports, and anchor devices.

C. Install the following pipe attachments:

1. Adjustable steel clevis hangers for individual horizontal runs less than 20 ft. (6 m) long.
2. Roller hangers and spring hangers for individual horizontal runs 20 ft. (6 m) or longer.
3. Pipe Roller: MSS SP-58, Type 44 for multiple horizontal piping 20 ft. (6 m) or longer, supported on a trapeze.
4. Spring hangers to support vertical runs.
5. Copper-clad hangers and supports for hangers and supports in direct contact with copper pipe.

D. Install hangers for copper tubing, with maximum horizontal spacing and minimum rod diameters, to comply with MSS SP-58, locally enforced codes, and authorities having jurisdiction requirements, whichever are most stringent.

E. Support horizontal piping within 12 inches (300 mm) of each fitting.

F. Support vertical runs of copper tubing to comply with MSS SP-58, locally enforced codes, and authorities having jurisdiction requirements, whichever are most stringent.

3.6 FIELD QUALITY CONTROL

A. Tests and Inspections:

1. Comply with ASME B31.5, Chapter VI.
2. Test refrigerant piping, specialties, and receivers. Isolate compressor, condenser, evaporator, and safety devices from test pressure if they are not rated above the test pressure.
3. Test high- and low-pressure side piping of each system separately at not less than the pressures indicated in "Performance Requirements" Article.

    a. Fill system with nitrogen to the required test pressure.
    b. System must maintain test pressure at the manifold gauge throughout duration of test.
    c. Test joints and fittings with electronic leak detector or by brushing a small amount of soap and glycerin solution over joints.
    d. Remake leaking joints using new materials, and retest until satisfactory results are achieved.

B. Prepare test and inspection reports.

3.7 SYSTEM CHARGING

A. Charge system using the following procedures:

1. Install core in filter dryers after leak test but before evacuation.
2. Evacuate entire refrigerant system with a vacuum pump to 500 micrometers (67 Pa). If vacuum holds for 12 hours, system is ready for charging.
3. Break vacuum with refrigerant gas, allowing pressure to build up to 2 psig (14 kPa).
4. Charge system with a new filter-dryer core in charging line.

3.8 ADJUSTING

A. Adjust thermostatic expansion valve to obtain proper evaporator superheat.

B. Adjust high- and low-pressure switch settings to avoid short cycling in response to fluctuating suction pressure.

C. Adjust set-point temperature of air-conditioning or chilled-water controllers to the system design temperature.

D. Perform the following adjustments before operating the refrigeration system, according to manufacturer's written instructions:

1. Open shutoff valves in condenser water circuit.
2. Verify that compressor oil level is correct.
3. Open compressor suction and discharge valves.
4. Open refrigerant valves but not bypass valves that are used for other purposes.
5. Check open compressor-motor alignment and verify lubrication for motors and bearings.

E. Replace core of replaceable filter dryer after system has been adjusted and after design flow rates and pressures are established.

END OF SECTION 232300

SECTION 233113 - METAL DUCTS

PART 1 - GENERAL

1.1 SUMMARY

A. Section Includes:

1. Single-wall rectangular ducts and fittings.
2. Single-wall round ducts and fittings.
3. Sheet metal materials.
4. Sealants and gaskets.
5. Hangers and supports.

B. Related Requirements:

1. Section 230548 "Vibration and Seismic Controls for HVAC" for seismic restraint devices and installation.
2. Section 230593 "Testing, Adjusting, and Balancing for HVAC" for testing, adjusting, and balancing requirements for metal ducts.
3. Section 233300 "Air Duct Accessories" for dampers, sound-control devices, duct-mounting access doors and panels, turning vanes, and flexible ducts.

1.2 ACTION SUBMITTALS

A. Product Data: For each type of the following products:
1. Sealants and gaskets.
2. Seismic-restraint devices.

B. Shop Drawings:

1. Fabrication, assembly, and installation, including plans, elevations, sections, components, and attachments to other work.
2. Factory- and shop-fabricated ducts and fittings.
3. Duct layout indicating sizes, configuration, liner material, and static-pressure classes.
4. Elevation of top and bottom of ducts.
5. Dimensions of all duct runs from building grid lines.
6. Fittings.
7. Reinforcement and spacing.
8. Seam and joint construction.
9. Penetrations through fire-rated and other partitions.
10. Equipment installation based on equipment being used on Project.
11. Locations for duct accessories, including dampers, turning vanes, and access doors and panels.
12. Hangers and supports, including methods for duct and building attachment, seismic restraints, and vibration isolation.

C. Delegated Design Submittals:

1. Sheet metal thicknesses.
2. Joint and seam construction and sealing.
3. Reinforcement details and spacing.
4. Materials, fabrication, assembly, and spacing of hangers and supports.
5. Design Calculations: Calculations, including analysis data signed and sealed by the qualified professional engineer responsible for their preparation for selecting hangers and supports and seismic restraints.

1.3 INFORMATIONAL SUBMITTALS

A. Coordination Drawings: A single set of plans or BIM model, drawn to scale, showing the items described in this Section, and coordinated with all building trades.

B. Welding certificates.

C. Field quality-control reports.

PART 2 - PRODUCTS

2.1 PERFORMANCE REQUIREMENTS

A. Delegated Duct Design: Duct construction, including sheet metal thicknesses, seam and joint construction, reinforcements, and hangers and supports, comply with SMACNA's "HVAC Duct Construction Standards - Metal and Flexible" and with performance requirements and design criteria indicated in "Duct Schedule" Article.

B. Structural Performance: Duct hangers and supports and seismic restraints are to withstand the effects of gravity and seismic loads and stresses within limits and under conditions described in SMACNA's "HVAC Duct Construction Standards - Metal and Flexible" and ASCE/SEI 7. Seismically brace duct hangers and supports in accordance with SMACNA's "Seismic Restraint Manual: Guidelines for Mechanical Systems.".

C. Seismic Performance: Ductwork to withstand the effects of earthquake motions determined in accordance with ASCE/SEI 7. See Section 230548 "Vibration and Seismic Controls for HVAC."

1. The term "withstand" means "the unit will remain in place without separation of any parts from the device when subjected to the seismic forces specified and the unit will be fully operational after the seismic event."
2. Component Importance Factor: 1.0.

D. Wind Performance: Ducts are to withstand the effects of wind determined in accordance with to ASCE/SEI 7. See Section 230548 "Vibration and Seismic Controls for HVAC."

E. Airstream Surfaces: Surfaces in contact with airstream comply with requirements in ASHRAE 62.1.

F. ASHRAE Compliance: Applicable requirements in ASHRAE 62.1, Section 5 - "Systems and Equipment," and Section 7 - "Construction and System Startup."

G. ASHRAE/IES Compliance: Applicable requirements in ASHRAE/IES 90.1, Section 6.4.4 - "HVAC System Construction and Insulation."

H. Duct Dimensions: Unless otherwise indicated, all duct dimensions indicated on Drawings are inside clear dimensions and do not include insulation or duct wall thickness.

2.2 SINGLE-WALL RECTANGULAR DUCTS AND FITTINGS

A. General Fabrication Requirements: Comply with SMACNA's "HVAC Duct Construction Standards - Metal and Flexible" based on indicated static-pressure class unless otherwise indicated.

1. Construct ducts of galvanized sheet steel unless otherwise indicated.

B. Transverse Joints: Fabricate joints in accordance with SMACNA's "HVAC Duct Construction Standards - Metal and Flexible," Figure 2-1, "Rectangular Duct/Transverse Joints," for static-pressure class, applicable sealing requirements, materials involved, duct-support intervals, and other provisions in SMACNA's "HVAC Duct Construction Standards - Metal and Flexible."

1. For ducts with longest side less than 36 inches (914 mm), select joint types in accordance with Figure 2-1.
2. For ducts with longest side 36 inches (914 mm) or greater, use flange joint connector Type T-22, T-24, T-24A, T-25a, or T-25b. Factory-fabricated flanged duct connection system may be used if submitted and approved by engineer of record.

C. Longitudinal Seams: Select seam types and fabricate in accordance with SMACNA's "HVAC Duct Construction Standards - Metal and Flexible," Figure 2-2, "Rectangular Duct/Longitudinal Seams," for static-pressure class, applicable sealing requirements, materials involved, duct-support intervals, and other provisions in SMACNA's "HVAC Duct Construction Standards - Metal and Flexible." All longitudinal seams are to be Pittsburgh lock seams unless otherwise specified for specific application.

D. Elbows, Transitions, Offsets, Branch Connections, and Other Duct Construction: Select types and fabricate in accordance with SMACNA's "HVAC Duct Construction Standards - Metal and Flexible," Ch. 4, "Fittings and Other Construction," for static-pressure class, applicable sealing requirements, materials involved, duct-support intervals, and other provisions in SMACNA's "HVAC Duct Construction Standards - Metal and Flexible."

2.3 SINGLE-WALL ROUND DUCTS AND FITTINGS

A. General Fabrication Requirements: Comply with SMACNA's "HVAC Duct Construction Standards - Metal and Flexible," Ch. 3, "Round, Oval, and Flexible Duct," based on indicated static-pressure class unless otherwise indicated.

1. Construct ducts of galvanized sheet steel unless otherwise indicated.

B. Source Limitations: Obtain single-wall round ducts and fittings from single manufacturer.

C. Transverse Joints: Select joint types and fabricate in accordance with SMACNA's "HVAC Duct Construction Standards - Metal and Flexible," Figure 3-1, "Round Duct Transverse Joints," for static-pressure class, applicable sealing requirements, materials involved, duct-support intervals, and other provisions in SMACNA's "HVAC Duct Construction Standards - Metal and Flexible."

D. Longitudinal Seams: Select seam types and fabricate in accordance with SMACNA's "HVAC Duct Construction Standards - Metal and Flexible," Figure 3-2, "Round Duct Longitudinal Seams," for static-pressure class, applicable sealing requirements, materials involved, duct-support intervals, and other provisions in SMACNA's "HVAC Duct Construction Standards - Metal and Flexible."

1. Fabricate round ducts larger than 90 inches (2286 mm) in diameter with butt-welded longitudinal seams.
2. Fabricate flat-oval ducts larger than 72 inches (1830 mm) in width (major dimension) with butt-welded longitudinal seams.

E. Tees and Laterals: Select types and fabricate in accordance with SMACNA's "HVAC Duct Construction Standards - Metal and Flexible," Figure 3-5, "90 Degree Tees and Laterals," and Figure 3-6, "Conical Tees," for static-pressure class, applicable sealing requirements, materials involved, duct-support intervals, and other provisions in SMACNA's "HVAC Duct Construction Standards - Metal and Flexible."

2.4 SHEET METAL MATERIALS

A. General Material Requirements: Comply with SMACNA's "HVAC Duct Construction Standards - Metal and Flexible" for acceptable materials, material thicknesses, and duct construction methods unless otherwise indicated. Sheet metal materials are to be free of pitting, seam marks, roller marks, stains, discolorations, and other imperfections.

B. Galvanized Sheet Steel: Comply with ASTM A653/A653M.

1. Galvanized Coating Designation: G60 (Z180).
2. Coating Materials: Acceptable to authorities having jurisdiction for use on ducts listed and labeled by an NRTL for compliance with UL 181, Class 1.

C. Factory- or Shop-Applied Antimicrobial Coating:

1. Apply to the surface of sheet metal that will form the interior surface of the duct. An untreated clear coating is to be applied to the exterior surface.
2. Antimicrobial compound is to be tested for efficacy by an NRTL and registered by the EPA for use in HVAC systems.
3. Coating containing the antimicrobial compound is to have a hardness of 2H, minimum, when tested in accordance with ASTM D3363.
4. Surface-Burning Characteristics: Maximum flame-spread index of 25 and maximum smoke-developed index of 50 when tested in accordance with UL 723; certified by an NRTL.
5. Shop-Applied Coating Color: White.

6. Antimicrobial coating on sheet metal is not required for duct containing liner treated with antimicrobial coating.

D. Reinforcement Shapes and Plates: ASTM A36/A36M, steel plates, shapes, and bars; black and galvanized.

1. Where black- and galvanized-steel shapes and plates are used to reinforce aluminum ducts, isolate the different metals with butyl rubber, neoprene, or EPDM gasket materials.

E. Tie Rods: Galvanized steel, 1/4-inch- (6-mm-) minimum diameter for lengths 36 inches (900 mm) or less; 3/8-inch- (10-mm-) minimum diameter for lengths longer than 36 inches (900 mm).

2.5 SEALANT AND GASKETS

A. General Sealant and Gasket Requirements: Surface-burning characteristics for sealants and gaskets are to be a maximum flame-spread index of 25 and a maximum smoke-developed index of 50 when tested in accordance with UL 723; certified by an NRTL.

B. Two-Part Tape Sealing System:

1. Tape: Woven cotton fiber impregnated with mineral gypsum and modified acrylic/silicone activator to react exothermically with tape to form hard, durable, airtight seal.
2. Tape Width: 3 inches (76 mm).
3. Sealant: Modified styrene acrylic.
4. Water resistant.
5. Mold and mildew resistant.
6. Maximum Static-Pressure Class: 10 inch wg (2500 Pa), positive and negative.
7. Service: Indoor and outdoor.
8. Service Temperature: Minus 40 to plus 200 deg F (Minus 40 to plus 93 deg C).
9. Substrate: Compatible with galvanized sheet steel (both PVC coated and bare), stainless steel, or aluminum.

C. Water-Based Joint and Seam Sealant:

1. Application Method: Brush on.
2. Solids Content: Minimum 65 percent.
3. Shore A Hardness: Minimum 20.
4. Water resistant.
5. Mold and mildew resistant.
6. VOC: Maximum 75 g/L (less water).
7. Maximum Static-Pressure Class: 10 inch wg (2500 Pa), positive and negative.
8. Service: Indoor or outdoor.
9. Substrate: Compatible with galvanized sheet steel (both PVC coated and bare), stainless steel, or aluminum sheets.

D. Solvent-Based Joint and Seam Sealant:

1. Application Method: Brush on.

2. Base: Synthetic rubber resin.
3. Solvent: Toluene and heptane.
4. Solids Content: Minimum 60 percent.
5. Shore A Hardness: Minimum 60.
6. Water resistant.
7. Mold and mildew resistant.
8. Maximum Static-Pressure Class: 10-inch wg (2500 Pa), positive or negative.
9. Service: Indoor or outdoor.
10. Substrate: Compatible with galvanized sheet steel (both PVC coated and bare), stainless steel, or aluminum sheets.

E. Flanged Joint Sealant: Comply with ASTM C920.

1. General: Single-component, acid-curing, silicone, elastomeric.
2. Type: S.
3. Grade: NS.
4. Class: 25.
5. Use: O.

F. Flange Gaskets: Butyl rubber, neoprene, or EPDM polymer with polyisobutylene plasticizer.

G. Round Duct Joint O-Ring Seals:

1. Seal is to provide maximum leakage class of 3 cfm/100 sq. ft. at 1-inch wg (0.14 L/s per sq. m at 250 Pa) and is to be rated for10-inch wg (2500-Pa) static-pressure class, positive or negative.
2. EPDM O-ring to seal in concave bead in coupling or fitting spigot.
3. Double-lipped, EPDM O-ring seal, mechanically fastened to factory-fabricated couplings and fitting spigots.

2.6 HANGERS AND SUPPORTS

A. Hanger Rods for Noncorrosive Environments: Galvanized-steel rods and nuts.

B. Hanger Rods for Corrosive Environments: Electrogalvanized, all-thread rods or galvanized rods with threads painted with zinc-chromate primer after installation.

C. Strap and Rod Sizes: Comply with SMACNA's "HVAC Duct Construction Standards - Metal and Flexible," Table 5-1 (Table 5-1M), "Rectangular Duct Hangers Minimum Size," and Table 5-2, "Minimum Hanger Sizes for Round Duct."

D. Steel Cables for Galvanized-Steel Ducts: Galvanized steel complying with ASTM A603.

E. Steel Cables for Stainless Steel Ducts: Stainless steel complying with ASTM A492.

F. Steel Cable End Connections: Galvanized-steel assemblies with brackets, swivel, and bolts designed for duct hanger service; with an automatic-locking and clamping device.

G. Duct Attachments: Sheet metal screws, blind rivets, or self-tapping metal screws; compatible with duct materials.

H. Trapeze and Riser Supports:

1. Supports for Galvanized-Steel Ducts: Galvanized-steel shapes and plates.

PART 3 - EXECUTION

3.1 DUCT INSTALLATION

A. Drawing plans, schematics, and diagrams indicate general location and arrangement of duct system. Indicated duct locations, configurations, and arrangements were used to size ducts and calculate friction loss for air-handling equipment sizing and for other design considerations. Install duct systems as indicated unless deviations to layout are approved on Shop Drawings and coordination drawings.

B. Install ducts in accordance with SMACNA's "HVAC Duct Construction Standards - Metal and Flexible" unless otherwise indicated.

C. Install ducts in maximum practical lengths with fewest possible joints.

D. Install factory- or shop-fabricated fittings for changes in direction, size, and shape and for branch connections.

E. Unless otherwise indicated, install ducts vertically and horizontally, and parallel and perpendicular to building lines.

F. Install ducts close to walls, overhead construction, columns, and other structural and permanent enclosure elements of building.

G. Install ducts with a clearance of 1 inch (25 mm), plus allowance for insulation thickness.

H. Route ducts to avoid passing through transformer vaults and electrical equipment rooms and enclosures.

I. Install heating coils, cooling coils, air filters, dampers, and all other duct-mounted accessories in air ducts where indicated on Drawings.

J. Protect duct interiors from moisture, construction debris and dust, and other foreign materials both before and after installation. Comply with SMACNA's "IAQ Guidelines for Occupied Buildings Under Construction," Appendix G, "Duct Cleanliness for New Construction Guidelines."

K. Elbows: Use long-radius elbows wherever they fit.

1. Fabricate 90-degree rectangular mitered elbows to include turning vanes.
2. Fabricate 90-degree round elbows with a minimum of three segments for 12 inches (300 mm) and smaller and a minimum of five segments for 14 inches (350 mm) and larger.

L. Branch Connections: Use lateral or conical branch connections.

3.2 DUCT SEALING

A. Seal ducts for duct static-pressure, seal classes, and leakage classes specified in "Duct Schedule" Article in accordance with SMACNA's "HVAC Duct Construction Standards - Metal and Flexible."

B. Seal ducts at a minimum to the following seal classes in accordance with SMACNA's "HVAC Duct Construction Standards - Metal and Flexible":

1. Comply with SMACNA's "HVAC Duct Construction Standards - Metal and Flexible."
2. Outdoor, Supply-Air Ducts: Seal Class A.
3. Outdoor, Exhaust Ducts: Seal Class C.
4. Outdoor, Return-Air Ducts: Seal Class C.
5. Unconditioned Space, Supply-Air Ducts in Pressure Classes 2-Inch wg (500 Pa) and Lower: Seal Class B.
6. Unconditioned Space, Supply-Air Ducts in Pressure Classes Higher Than 2-Inch wg (500 Pa): Seal Class A.
7. Unconditioned Space, Exhaust Ducts: Seal Class C.
8. Unconditioned Space, Return-Air Ducts: Seal Class B.
9. Conditioned Space, Supply-Air Ducts in Pressure Classes 2-Inch wg (500 Pa) and Lower: Seal Class C.
10. Conditioned Space, Supply-Air Ducts in Pressure Classes Higher Than 2-Inch wg (500 Pa): Seal Class B.
11. Conditioned Space, Exhaust Ducts: Seal Class B.
12. Conditioned Space, Return-Air Ducts: Seal Class C.

3.3 HANGER AND SUPPORT INSTALLATION

A. Comply with SMACNA's "HVAC Duct Construction Standards - Metal and Flexible," Chapter 5, "Hangers and Supports."

B. Building Attachments: Concrete inserts, powder-actuated fasteners, or structural-steel fasteners appropriate for construction materials to which hangers are being attached.

1. Where practical, install concrete inserts before placing concrete.
2. Install powder-actuated concrete fasteners after concrete is placed and completely cured.
3. Use powder-actuated concrete fasteners for standard-weight aggregate concretes or for slabs more than 4 inches (100 mm) thick.
4. Do not use powder-actuated concrete fasteners for lightweight-aggregate concretes or for slabs less than 4 inches (100 mm) thick.
5. Do not use powder-actuated concrete fasteners for seismic restraints. Coordinate with Section 230548 "Vibration and Seismic Controls for HVAC."

C. Hanger Spacing: Comply with SMACNA's "HVAC Duct Construction Standards - Metal and Flexible," Table 5-1 (Table 5-1M), "Rectangular Duct Hangers Minimum Size," and Table 5-2, "Minimum Hanger Sizes for Round Duct," for maximum hanger spacing; install hangers and supports within 24 inches (610 mm) of each elbow and within 48 inches (1220 mm) of each branch intersection.

D. Hangers Exposed to View: Threaded rod and angle or channel supports.

E. Support vertical ducts with steel angles or channel secured to the sides of the duct with welds, bolts, sheet metal screws, or blind rivets; support at each floor and at a maximum interval of 16 feet (5 m).

F. Install upper attachments to structures. Select and size upper attachments with pull-out, tension, and shear capacities appropriate for supported loads and building materials where used.

3.4 SEISMIC-RESTRAINT-DEVICE INSTALLATION

A. See Section 230548 "Vibration and Seismic Controls for HVAC" for seismic restraint installation requirements.

3.5 DUCTWORK CONNECTIONS

A. Make connections to equipment with flexible connectors complying with Section 233300 "Air Duct Accessories."

B. Comply with SMACNA's "HVAC Duct Construction Standards - Metal and Flexible" for branch, outlet and inlet, and terminal unit connections.

3.6 FIELD QUALITY CONTROL

A. Perform tests and inspections.

B. Leakage Tests:

1. Comply with SMACNA's "HVAC Air Duct Leakage Test Manual." Submit a test report for each test.
2. Test the following systems:
    a. Supply Ducts with a Pressure Class of 2 (500) Inch wg (Pa) or Higher: Test representative duct sections, selected by Architect from sections installed, totaling no less than 50 percent of total installed duct area for each designated pressure class.
    b. Return Ducts with a Pressure Class of 2 (500) Inch wg (Pa) or Higher: Test representative duct sections, selected by Architect from sections installed, totaling no less than 50 percent of total installed duct area for each designated pressure class.
    c. Exhaust Ducts with a Pressure Class of 2 (500) Inch wg (Pa) or Higher: Test representative duct sections, selected by Architect from sections installed, totaling no less than 50 percent of total installed duct area for each designated pressure class.
3. Disassemble, reassemble, and seal segments of systems to accommodate leakage testing and for compliance with test requirements.
4. Testing of each duct section is to be performed with access doors, coils, filters, dampers, and other duct-mounted devices in place as designed. No devices are to be removed or blanked off so as to reduce or prevent additional leakage.
5. Test for leaks before applying external insulation.

6. Conduct tests at static pressures equal to maximum design pressure of system or section being tested. If static-pressure classes are not indicated, test system at maximum system design pressure. Do not pressurize systems above maximum design operating pressure.
7. Give seven days' advance notice for testing.

C. Duct System Cleanliness Tests:

1. Visually inspect duct system to ensure that no visible contaminants are present.
2. Test sections of metal duct system, chosen randomly by Owner, for cleanliness in accordance with "Description of Method 3 - NADCA Vacuum Test" in NADCA ACR, "Assessment, Cleaning and Restoration of HVAC Systems."

    a. Acceptable Cleanliness Level: Net weight of debris collected on the filter media is to not exceed 0.75 mg/100 sq. cm.

D. Duct system will be considered defective if it does not pass tests and inspections.

E. Prepare test and inspection reports.

3.7 DUCT CLEANING

A. Clean new duct system(s) before testing, adjusting, and balancing.

B. For cleaning of existing ductwork, see Section 230130.52 "Existing HVAC Air Distribution System Cleaning."

C. Use duct cleaning methodology as indicated in NADCA ACR.

D. Use service openings for entry and inspection.

1. Provide openings with access panels appropriate for duct static-pressure and leakage class at dampers, coils, and any other locations where required for inspection and cleaning access. Provide insulated panels for insulated or lined duct. Patch insulation and liner as recommended by duct liner manufacturer. Comply with Section 233300 "Air Duct Accessories" for access panels and doors.
2. Disconnect and reconnect flexible ducts as needed for cleaning and inspection.
3. Remove and reinstall ceiling to gain access during the cleaning process.

E. Particulate Collection and Odor Control:

1. When venting vacuuming system inside the building, use HEPA filtration with 99.97 percent collection efficiency for 0.3-micron-size (or larger) particles.
2. When venting vacuuming system to outdoors, use filter to collect debris removed from HVAC system, and locate exhaust downwind and away from air intakes and other points of entry into building.

F. Clean the following components by removing surface contaminants and deposits:

1. Air outlets and inlets (registers, grilles, and diffusers).

2. Supply, return, and exhaust fans including fan housings, plenums (except ceiling supply and return plenums), scrolls, blades or vanes, shafts, baffles, dampers, and drive assemblies.
3. Air-handling unit internal surfaces and components including mixing box, coil section, air wash systems, spray eliminators, condensate drain pans, humidifiers and dehumidifiers, filters and filter sections, and condensate collectors and drains.
4. Coils and related components.
5. Return-air ducts, dampers, actuators, and turning vanes except in ceiling plenums and mechanical equipment rooms.
6. Supply-air ducts, dampers, actuators, and turning vanes.
7. Dedicated exhaust and ventilation components and makeup air systems.

G. Mechanical Cleaning Methodology:

1. Clean metal duct systems using mechanical cleaning methods that extract contaminants from within duct systems and remove contaminants from building.
2. Use vacuum-collection devices that are operated continuously during cleaning. Connect vacuum device to downstream end of duct sections so areas being cleaned are under negative pressure.
3. Use mechanical agitation to dislodge debris adhered to interior duct surfaces without damaging integrity of metal ducts, duct liner, or duct accessories.
4. Clean fibrous-glass duct liner with HEPA vacuuming equipment; do not permit duct liner to get wet. Replace fibrous-glass duct liner that is damaged, deteriorated, or delaminated or that has friable material, mold, or fungus growth.
5. Clean coils and coil drain pans in accordance with NADCA ACR. Keep drain pan operational. Rinse coils with clean water to remove latent residues and cleaning materials; comb and straighten fins.
6. Provide drainage and cleanup for wash-down procedures.
7. Antimicrobial Agents and Coatings: Apply EPA-registered antimicrobial agents if fungus is present. Apply antimicrobial agents in accordance with manufacturer's written instructions after removal of surface deposits and debris.

3.8 STARTUP

A. Air Balance: Comply with requirements in Section 230593 "Testing, Adjusting, and Balancing for HVAC."

END OF SECTION 233113

SECTION 233300 - AIR DUCT ACCESSORIES

PART 1 - GENERAL

1.1 SUMMARY

A. Section Includes:

1. Backdraft and pressure relief dampers.
2. Manual volume dampers.
3. Flange connectors.
4. Duct-mounted access doors.
5. Flexible connectors.
6. Duct accessory hardware.

1.2 ACTION SUBMITTALS

A. Product Data: For each type of product.

1. For duct silencers, include pressure drop, dynamic insertion loss, and self-generated noise data. Include breakout noise calculations for high-transmission-loss casings.

B. Sustainable Design Submittals:

C. Shop Drawings: For duct accessories. Include plans, elevations, sections, details, and attachments to other work.

1. Detail duct accessories' fabrication and installation in ducts and other construction. Include dimensions, weights, loads, and required clearances; and method of field assembly into duct systems and other construction. Include the following:

a. Special fittings.
b. Manual volume damper installations.
c. Control-damper installations.
d. Fire-damper, smoke-damper, combination fire- and smoke-damper, ceiling, and corridor-damper installations, including sleeves; and duct-mounted access doors and remote damper operators.
e. Duct security bars.

1.3 INFORMATIONAL SUBMITTALS

A. Coordination Drawings: Reflected ceiling plans, or BIM model, drawn to scale, on which ceiling-mounted access panels and access doors required for access to duct accessories are shown and coordinated with each other, using input from installers of the items involved.

B. Source quality-control reports.

1.4 CLOSEOUT SUBMITTALS

A. Operation and Maintenance Data: For air duct accessories to include in operation and maintenance manuals.

1.5 MAINTENANCE MATERIAL SUBMITTALS

A. Furnish extra materials that match products installed and that are packaged with protective covering for storage and identified with labels describing contents.

1. Fusible Links: Furnish quantity equal to 10 percent of amount installed.

PART 2 - PRODUCTS

2.1 PERFORMANCE REQUIREMENTS

A. Comply with NFPA 90A and NFPA 90B.

B. Comply with SMACNA's "HVAC Duct Construction Standards - Metal and Flexible" for acceptable materials, material thicknesses, and duct construction methods unless otherwise indicated. Sheet metal materials shall be free of pitting, seam marks, roller marks, stains, discolorations, and other imperfections.

2.2 BACKDRAFT AND PRESSURE RELIEF DAMPERS

A. Description: Gravity balanced.

B. Performance:

1. Maximum Air Velocity: 1250 fpm (6.4 m/s).
2. Maximum System Pressure: 0.8 inch wg.
3. AMCA Certification: Test and rate in accordance with AMCA 511.
4. Leakage:

a. Class IA: Leakage shall not exceed 3 cfm/sq. ft. (15.2 L/s per sq. m) against 1-inch wg (250-Pa) differential static pressure.

C. Construction:

1. Frame:

a. Hat shaped.
b. 16-gauge- (1.6-mm-) thick, galvanized sheet steel

2. Blades:

a. Multiple single-piece blades.

b. Center pivoted, maximum 6-inch (150-mm) width, 26-gauge (0.48-mm) Type 304 stainless steel

3. Blade Action: Parallel.

D. Blade Seals: Neoprene, mechanically locked.

E. Blade Axles:

1. Material: Stainless steel.
2. Diameter: 0.20 inch (5 mm).

F. Tie Bars and Brackets: Aluminum.

G. Return Spring: Adjustable tension.

H. Bearings: Steel ball.

I. Damper Actuator - Electric:

1. Electric - 120 V ac.
2. UL 873 plenum rated.
3. Two position.

a. Sufficient motor torque and spring torque to drive damper fully closed with adequate force to achieve required damper seal.
b. Minimum 90-degree drive rotation.

4. Clockwise or counterclockwise drive rotation as required for application.
5. Environmental Operating Range:

a. Temperature: Minus 40 to plus 130 deg F (Minus 40 to plus 55 deg C).
b. Humidity: 5 to 95 percent relative humidity noncondensing.

6. Environmental Enclosure: NEMA 2.
7. Actuator to be factory mounted and provided with a single-point wiring connection.

J. Controllers, Electrical Devices, and Wiring:
1. Electrical Connection: 115 V, single phase, 60 Hz.

K. Accessories:

1. Adjustment device to permit setting for varying differential static pressure.
2. Counterweights and spring-assist kits for vertical airflow installations.
3. Chain pulls.
4. Screen Mounting:

a. Front mounted in sleeve.

1) Sleeve Thickness: 20 gauge (1.0 mm) minimum.
2) Sleeve Length: 6 inches (150 mm) minimum.

5. Screen Material: Galvanized steel.
6. Screen Type: Insect.
7. 90-degree stops.

2.3 MANUAL VOLUME DAMPERS

A. Standard, Steel, Manual Volume Dampers:
   1. Performance:
      a. Leakage Rating Class III: Leakage not exceeding 40 cfm/sq. ft. (203 L/s per sq. m) against 1-inch wg (250-Pa) differential static pressure.
   2. Construction:
      a. Linkage out of airstream.
      b. Suitable for horizontal or vertical airflow applications.
   3. Frames:
      a. Hat-shaped, 18-gauge- (1.3-mm-) thick stainless steel.
      b. Mitered and welded corners.
      c. Flanges for attaching to walls and flangeless frames for installing in ducts.
   4. Blades:
      a. Multiple or single blade.
      b. Parallel- or opposed-blade design.
      c. Stiffen damper blades for stability.
      d. Stainless steel; 16 gauge (1.6 mm) thick.
   5. Blade Axles: Stainless steel.
   6. Bearings:
      a. Oil-impregnated stainless steel sleeve.
      b. Dampers mounted with vertical blades to have thrust bearing at each end of every blade.
   7. Tie Bars and Brackets: Galvanized steel.
   8. Locking device to hold damper blades in a fixed position without vibration.

B. Standard, Aluminum, Manual Volume Dampers:
   1. Performance:
      a. Leakage Rating Class III: Leakage not exceeding 40 cfm/sq. ft. (203 L/s per sq. m) against 1-inch wg (250-Pa) differential static pressure.
   2. Construction:
      a. Linkage out of airstream.
      b. Suitable for horizontal or vertical airflow applications.

3. Frames:

    a. Hat-shaped, 0.10-inch- (2.5-mm-) thick, aluminum sheet channels.
    b. Flanges for attaching to walls and flangeless frames for installing in ducts.

4. Blades:

    a. Multiple or single blade.
    b. Parallel- or opposed-blade design.
    c. Stiffen damper blades for stability.
    d. Roll-Formed Aluminum Blades: 0.10-inch- (2.5-mm-) thick aluminum sheet.
    e. Extruded-Aluminum Blades: 0.050-inch- (1.2-mm-) thick extruded aluminum.

5. Blade Axles: Stainless steel.
6. Bearings:

    a. Stainless steel sleeve.
    b. Dampers mounted with vertical blades to have thrust bearing at each end of every blade.

7. Tie Bars and Brackets: Aluminum.
8. Locking device to hold damper blades in a fixed position without vibration.

C. Low-Leakage, Steel, Manual Volume Dampers:
1. Performance:

    a. AMCA Certification: Test and rate in accordance with AMCA 511.
    b. Leakage:

        1) Class IA: Leakage shall not exceed 3 cfm/sq. ft. (15.2 L/s per sq. m) against 1-inch wg (250-Pa) differential static pressure.

2. Construction:

    a. Linkage: Out of airstream.
    b. Suitable for horizontal or vertical airflow applications.

3. Frames:

    a. Hat, U, or angle shaped.
    b. Thickness: 18-gauge (1.3-mm) stainless steel.
    c. Mitered and welded corners.
    d. Flanges for attaching to walls and flangeless frames for installing in ducts.

4. Blades:

    a. Multiple or single blade.
    b. Parallel- or opposed-blade design.
    c. Stiffen damper blades for stability.
    d. Stainless, roll-formed steel; 16 gauge (1.6 mm) thick.

5. Blade Edging Seals:
    a. Inflatable seal blade edging or replaceable rubber seals.

6. Blade Jamb Seals: Flexible metal compression type.
7. Blade Axles: Stainless steel.
8. Bearings:

    a. Oil-impregnated stainless steel sleeve.
    b. Dampers mounted with vertical blades to have thrust bearing at each end of every blade.

9. Tie Bars and Brackets: Aluminum.
10. Locking device to hold damper blades in a fixed position without vibration.

    a. AMCA Certification: Test and rate in accordance with AMCA 511.
    b. Leakage:

        1) Class IA: Leakage shall not exceed 3 cfm/sq. ft. (15.2 L/s per sq. m) against 1-inch wg (250-Pa) differential static pressure.

11. Construction:

    a. Linkage out of airstream.
    b. Suitable for horizontal or vertical airflow applications.

12. Frames:

    a. Hat, U, or angle shaped.
    b. Thickness: 0.08-inch (2.0-mm) aluminum sheet channels.
    c. Flanges for attaching to walls and flangeless frames for installing in ducts.

13. Blades:

    a. Multiple or single blade.
    b. Parallel- or opposed-blade design.
    c. Extruded-Aluminum Blades: 0.050-inch- (1.2-mm-) thick extruded aluminum.

14. Blade Edging Seals:

    a. PVC.
    b. Inflatable seal blade edging or replaceable rubber seals.

15. Blade Jamb Seals: Flexible metal compression type.
16. Blade Axles: Stainless steel.
17. Bearings:

    a. Oil-impregnated stainless steel sleeve.
    b. Dampers mounted with vertical blades to have thrust bearings at each end of every blade.

18. Tie Bars and Brackets: Aluminum.

19. Locking device to hold damper blades in a fixed position without vibration.

D. Jackshaft:

1. Size: 0.5-inch (13-mm) diameter.
2. Material: Galvanized-steel pipe rotating within pipe-bearing assembly mounted on supports at each mullion and at each end of multiple-damper assemblies.
3. Length and Number of Mountings: As required to connect linkage of each damper in multiple-damper assembly.

E. Damper Hardware:

1. Zinc-plated, die-cast core with dial and handle, made of 3/32-inch- (2.4-mm-) thick zinc-plated steel, and a 3/4-inch (19-mm) hexagon locking nut.
2. Include center hole to suit damper operating-rod size.
3. Include elevated platform for insulated duct mounting.

2.4 FLANGE CONNECTORS

A. Description: Add-on or roll-formed, factory fabricated, slide-on transverse flange connectors, gaskets, and components.

B. Material: Galvanized steel.

C. Gauge and Shape: Match connecting ductwork.

2.5 DUCT-MOUNTED ACCESS DOORS

A. Duct-Mounted Access Doors: Fabricate access panels in accordance with SMACNA's "HVAC Duct Construction Standards - Metal and Flexible"; Figure 7-2 (7-2M), "Duct Access Doors and Panels," and Figure 7-3, "Access Doors - Round Duct."

1. Door:

a. Double wall, rectangular.
b. Galvanized sheet metal with insulation fill and thickness as indicated for duct pressure class.
c. 24-gauge- (0.70-mm-) thick galvanized steel or 0.032-inch (0.81-mm) thick aluminum or 24-gauge- (0.70-mm-) thick stainless steel door panel.
d. Vision panel.
e. Hinges and Latches: 1-by-1-inch (25-by-25-mm) butt or piano hinge and cam latches.
f. Fabricate doors airtight and suitable for duct pressure class.

2. Frame: Galvanized sheet steel, with bend-over tabs and foam gaskets.

a. 24-gauge- (0.70-mm-) thick galvanized steel or 0.032-inch- (0.81-mm-) thick aluminum frame.

3. Number of Hinges and Locks:

    a. Access Doors Less Than 12 Inches (300 mm) Square: No hinges and two sash locks.
    b. Access Doors up to 18 Inches (460 mm) Square: Two hinges and two sash locks.
    c. Access Doors up to 24 by 48 Inches (600 by 1200 mm): Three hinges and two compression latches with outside and inside handles.
    d. Access Doors Larger Than 24 by 48 Inches (600 by 1200 mm): Four hinges and two compression latches with outside and inside handles.

B. Pressure Relief Access Door:

1. Door and Frame Material: Galvanized sheet steel.

    a. 24-gauge- (0.70-mm-) thick galvanized steel or 0.032?inch- ((0.81-mm-)) thick aluminum or 24-gauge- (0.70-mm-) thick stainless steel door panel.

2. Door: Single wall with metal thickness applicable for duct pressure class.
3. Operation: Open outward for positive-pressure ducts and inward for negative-pressure ducts.
4. Factory set at 3.0 to 8.0 inches wg (800 to 2000 Pa).
5. Doors close when pressures are within set-point range.
6. Hinge: Continuous piano.
7. Latches: Cam.
8. Seal: Neoprene or foam rubber.
9. Insulation Fill: 1-inch- (25-mm-) thick, fibrous-glass or polystyrene-foam board.

2.6 FLEXIBLE CONNECTORS

A. Fire-Performance Characteristics: Adhesives, sealants, fabric materials, and accessory materials shall have flame-spread index not exceeding 25 and smoke-developed index not exceeding 50 when tested in accordance with ASTM E84.

B. Airstream Surfaces: Surfaces in contact with the airstream shall comply with requirements in ASHRAE 62.1.

C. Materials: Flame-retardant or noncombustible fabrics.

D. Coatings and Adhesives: Comply with UL 181, Class 1.

E. Metal-Edged Connectors: Factory fabricated with a fabric strip 5-3/4 inches (146 mm) wide attached to two strips of 2-3/4-inch- (70-mm-) wide, 0.028-inch- (0.7-mm-) thick, galvanized sheet steel or 0.032-inch- (0.8-mm-) thick aluminum sheets. Provide metal compatible with connected ducts.

F. Indoor System, Flexible Connector Fabric: Glass fabric double coated with neoprene.

1. Minimum Weight: 26 oz./sq. yd. (880 g/sq. m).
2. Tensile Strength: 480 lbf/inch (84 N/mm) in the warp and 360 lbf/inch (63 N/mm).in the filling.

3. Service Temperature: Minus 40 to plus 200 deg F (Minus 40 to plus 93 deg C).

G. Thrust Limits: Combination coil spring and elastomeric insert with spring and insert in compression, and with a load stop. Include rod and angle-iron brackets for attaching to fan discharge and duct.

1. Frame: Steel, fabricated for connection to threaded rods and to allow for a maximum of 30 degrees of angular rod misalignment without binding or reducing isolation efficiency.
2. Outside Spring Diameter: Not less than 80 percent of the compressed height of the spring at rated load.
3. Minimum Additional Travel: 50 percent of the required deflection at rated load.
4. Lateral Stiffness: More than 80 percent of rated vertical stiffness.
5. Overload Capacity: Support 200 percent of rated load, fully compressed, without deformation or failure.
6. Elastomeric Element: Molded, oil-resistant rubber or neoprene.
7. Coil Spring: Factory set and field adjustable for a maximum of movement at start and stop.

2.7 DUCT ACCESSORY HARDWARE

A. Instrument Test Holes: Cast iron or cast aluminum to suit duct material, including screw cap and gasket. Size to allow insertion of pitot tube and other testing instruments and of length to suit duct-insulation thickness.

B. Adhesives: High strength, quick setting, neoprene based, waterproof, and resistant to gasoline and grease.

2.8 MATERIALS

A. Galvanized Sheet Steel: Comply with ASTM A653/A653M.

1. Galvanized Coating Designation: G90 (Z275).
2. Exposed-Surface Finish: Mill phosphatized.

B. Stainless Steel Sheets: Comply with ASTM A480/A480M, Type 304, and having a No. 2 finish for concealed ducts.

C. Aluminum Sheets: Comply with ASTM B209 (ASTM B209M), Alloy 3003, Temper H14; with mill finish for concealed ducts and standard, one-side bright finish for exposed ducts.

D. Extruded Aluminum: Comply with ASTM B221 (ASTM B221M), Alloy 6063, Temper T6.

E. Reinforcement Shapes and Plates: Galvanized-steel reinforcement where installed on galvanized sheet metal ducts; compatible materials for aluminum and stainless steel ducts.

F. Tie Rods: Galvanized steel, 1/4-inch (6-mm) minimum diameter for lengths 36 inches (900 mm) or less; 3/8-inch (10-mm) minimum diameter for lengths longer than 36 inches (900 mm).

PART 3 - EXECUTION

3.1 INSTALLATION

A. Install duct accessories in accordance with applicable details in SMACNA's "HVAC Duct Construction Standards - Metal and Flexible" for metal ducts and in NAIMA AH116 for fibrous-glass ducts.

B. Install duct accessories of materials suited to duct materials; use galvanized-steel accessories in galvanized-steel and fibrous-glass ducts, stainless steel accessories in stainless steel ducts, and aluminum accessories in aluminum ducts.

C. Install backdraft dampers at inlet of exhaust fans or exhaust ducts as close as possible to exhaust fan unless otherwise indicated.

D. Where multiple damper sections are necessary to achieve required dimensions, provide reinforcement to fully support damper assembly when fully closed at full system design static pressure.

E. Install volume dampers at points on supply, return, and exhaust systems where branches extend from larger ducts. Where dampers are installed in ducts having duct liner, install dampers with hat channels of same depth as liner, and terminate liner with nosing at hat channel.

1. Install steel volume dampers in steel ducts.
2. Install aluminum volume dampers in aluminum ducts.

F. Set dampers to fully open position before testing, adjusting, and balancing.

G. Install test holes at fan inlets and outlets and elsewhere as indicated and as needed for testing and balancing.

H. Install duct access doors on sides of ducts to allow for inspecting, adjusting, and maintaining accessories and equipment at the following locations:

1. On both sides of duct coils.
2. Upstream and downstream from duct filters.
3. At outdoor-air intakes and mixed-air plenums.
4. At drain pans and seals.
5. Downstream from manual volume dampers, control dampers, backdraft dampers, and equipment.
6. Adjacent to and close enough to fire or smoke dampers, to reset or reinstall fusible links. Access doors for access to fire or smoke dampers having fusible links shall be pressure relief access doors and shall be outward operation for access doors installed upstream from dampers and inward operation for access doors installed downstream from dampers.
7. At each change in direction and at maximum 50-ft. (15-m) spacing.
8. Upstream and downstream from turning vanes.
9. Upstream or downstream from duct silencers.
10. For grease ducts, install at locations and spacing as required by NFPA 96.
11. Control devices requiring inspection.
12. Elsewhere as indicated.

I. Install access doors with swing against duct static pressure.

J. Access Door Sizes:

1. One-Hand or Inspection Access: 8 by 5 inches (200 by 125 mm).
2. Two-Hand Access: 12 by 6 inches (300 by 150 mm).
3. Head and Hand Access: 18 by 10 inches (460 by 250 mm).
4. Head and Shoulders Access: 21 by 14 inches (530 by 355 mm).
5. Body Access: 25 by 14 inches (635 by 355 mm).
6. Body plus Ladder Access: 25 by 17 inches (635 by 430 mm).

K. Install flexible connectors to connect ducts to equipment.

L. For fans developing static pressures of 5 inches wg (1250 Pa) and more, cover flexible connectors with loaded vinyl sheet held in place with metal straps.

M. Install duct test holes where required for testing and balancing purposes.

N. Install thrust limits at centerline of thrust, symmetrical on both sides of equipment. Attach thrust limits at centerline of thrust and adjust to a maximum of 1/4-inch (6-mm) movement during start and stop of fans.

3.2 FIELD QUALITY CONTROL

A. Tests and Inspections:

1. Operate dampers to verify full range of movement.
2. Inspect locations of access doors, and verify that size and location of access doors are adequate to perform required operation.

END OF SECTION 233300

SECTION 233713.23 - REGISTERS AND GRILLES

PART 1 - GENERAL

1.1 RELATED DOCUMENTS

A. Drawings and general provisions of the Contract, including General and Supplementary Conditions and Division 01 Specification Sections, apply to this Section.

1.2 SUMMARY

A. Section Includes:

1. Fixed face registers.

1.3 ACTION SUBMITTALS

A. Product Data: For each type of product.

1. Data Sheet: Indicate materials of construction, finish, and mounting details; and performance data including throw and drop, static-pressure drop, and noise ratings.
2. Register and Grille Schedule: Indicate drawing designation, room location, quantity, model number, size, and accessories furnished.

B. Samples: For each exposed product and for each color and texture specified. Smallest size register and grille indicated.

1.4 INFORMATIONAL SUBMITTALS

A. Coordination Drawings: Reflected ceiling plans, drawn to scale, on which the following items are shown and coordinated with each other, using input from installers of the items involved:

1. Method of attaching hangers to building structure.
2. Ceiling-mounted items including lighting fixtures, diffusers, grilles, speakers, sprinklers, access panels, and special moldings.
3. Duct access panels.

B. Source quality-control reports.

PART 2 - PRODUCTS

2.1 REGISTERS

A. Fixed Face Register:

1. Hart Cooley Model 814OB or approved equal
2. Material: Steel.
3. Finish: Baked enamel, white.
4. Core Construction: Integral.
5. Frame: 1-1/4 inches (32 mm) wide.
6. Mounting: Countersunk screw.
7. Damper Type: Adjustable opposed blade.

2.2 SOURCE QUALITY CONTROL

A. Verification of Performance: Rate registers and grilles according to ASHRAE 70, "Method of Testing for Rating the Performance of Air Outlets and Inlets."

PART 3 - EXECUTION

3.1 EXAMINATION

A. Examine areas where registers and grilles are installed for compliance with requirements for installation tolerances and other conditions affecting performance of equipment.

B. Proceed with installation only after unsatisfactory conditions have been corrected.

3.2 INSTALLATION

A. Install registers level and plumb.

B. Outlets and Inlets Locations: Drawings indicate general arrangement of ducts, fittings, and accessories. Air outlet and inlet locations have been indicated to achieve design requirements for air volume, noise criteria, airflow pattern, throw, and pressure drop. Make final locations where indicated, as much as practical. For units installed in lay-in ceiling panels, locate units in the center of panel. Where architectural features or other items conflict with installation, notify Architect for a determination of final location.

C. Install registers with airtight connections to ducts and to allow service and maintenance of dampers, air extractors, and fire dampers.

3.3 ADJUSTING

A. After installation, adjust registers and grilles to air patterns indicated, or as directed, before starting air balancing.

END OF SECTION 233713.23

SECTION 235416.13 - GAS-FIRED FURNACES

PART 1 - GENERAL

1.1 RELATED DOCUMENTS

A. Drawings and general provisions of the Contract, including General and Supplementary Conditions and Division 01 Specification Sections, apply to this Section.

1.2 SUMMARY

A. Section Includes:

1. Gas-fired, condensing furnaces and accessories complete with controls.
2. Refrigeration components.

1.3 ACTION SUBMITTALS

A. Product Data: For each type of product.

1. Include rated capacities, operating characteristics, furnished specialties, and accessories.

B. Shop Drawings:

1. Include details of equipment assemblies. Indicate dimensions, weights, loads, required clearances, method of field assembly, components, and location and size of each field connection.
2. Include diagrams for power, signal, and control wiring.

1.4 INFORMATIONAL SUBMITTALS

A. Sample Warranty: For special warranty.

1.5 CLOSEOUT SUBMITTALS

A. Operation and Maintenance Data: For each furnace to include in emergency, operation, and maintenance manuals.

1. In addition to items specified in Section 017823 "Operation and Maintenance Data," include the following:

a. Furnace and accessories complete with controls.
b. Air filter.
c. Refrigeration components.

1.6 MAINTENANCE MATERIAL SUBMITTALS

A. Furnish extra materials described below that match products installed and that are packaged with protective covering for storage and identified with labels describing contents.

1. Disposable Air Filters: Furnish four (4) complete sets.

1.7 QUALITY ASSURANCE

A. ASHRAE Compliance: Applicable requirements in ASHRAE 62.1, Section 5 - "Systems and Equipment" and Section 7 - "Construction and Startup."

B. ASHRAE/IES 90.1 Compliance: Applicable requirements in ASHRAE/IES 90.1, Section 6 - "Heating, Ventilating, and Air-Conditioning."

C. Comply with NFPA 70.

1.8 WARRANTY

A. Special Warranty: Manufacturer agrees to repair or replace the following components of furnaces that fail in materials or workmanship within specified warranty period:

1. Warranty Period, Commencing on Date of Substantial Completion:

a. Furnace Heat Exchanger: 20 years.
b. Integrated Ignition and Blower Control Circuit Board: Five years.

PART 2 - PRODUCTS

2.1 ASSEMBLY DESCRIPTION

A. Electrical Components, Devices, and Accessories: Listed and labeled as defined in NFPA 70, Article 100, by a qualified testing agency, and marked for intended location and application.

B. General Requirements for Noncondensing Gas-Fired Furnaces: Factory assembled, piped, wired, and tested; complying with ANSI Z21.47/CSA 2.3 and NFPA 54.

2.2 GAS-FIRED FURNACES, CONDENSING

A. Lennox model SL297UHNV or approved equal

B. Cabinet: Steel.

1. Cabinet interior around heat exchanger shall be factory-installed insulation.
2. Lift-out panels shall expose burners and all other items requiring access for maintenance.
3. Factory paint external cabinets in manufacturer's standard color.

4. Airstream Surfaces: Surfaces in contact with the airstream shall comply with requirements in ASHRAE 62.1.

C. Blower: factory balanced, resilient mounted, variable speed direct drive.

1. Special Motor Features, ECM: Electronically controlled motor (ECM) controlled by integrated furnace/blower control.

D. Type of Gas: Natural.

E. Heat Exchanger:

1. Primary: Aluminized steel.
2. Secondary: Stainless steel.

F. Burner:

1. Gas Valve: 100 percent safety modulating main gas valve, main shutoff valve, pressure regulator, safety pilot with electronic flame sensor, limit control, transformer, and combination ignition/fan timer control board.
2. Ignition: Electric pilot ignition, with hot-surface igniter or electric spark ignition.

G. Gas-Burner Safety Controls:

1. Electronic Flame Sensor: Prevents gas valve from opening until pilot flame is proven; stops gas flow on ignition failure.
2. Flame Rollout Switch: Installed on burner box; prevents burner operation.
3. Limit Control: Fixed stop at maximum permissible setting; de-energizes burner on excessive bonnet temperature; automatic reset.

H. Combustion-Air Inducer: Centrifugal fan with thermally protected motor and sleeve bearings prepurges heat exchanger and vents combustion products; pressure switch prevents furnace operation if combustion-air inlet or flue outlet is blocked.

I. Furnace Controls: Solid-state board integrates ignition, heat, cooling, and fan speeds; adjustable fan-on and fan-off timing; terminals for connection to accessories.

J. Accessories:

1. Combination Combustion-Air Intake and Vent: PVC plastic fitting to combine combustion-air inlet and vent through outside wall.
2. CPVC Plastic Vent Materials:

a. CPVC Plastic Pipe: Schedule 40, complying with ASTM F441/F441M.
b. CPVC Plastic Fittings: Schedule 40, complying with ASTM F438, socket type.
c. CPVC Solvent Cement: ASTM F493.

3. PVC Plastic Vent Materials:

a. PVC Plastic Pipe: Schedule 40, complying with ASTM D1785.
b. PVC Plastic Fittings: Schedule 40, complying with ASTM D2466, socket type.
c. PVC Solvent Cement: ASTM D2564.

K. Capacities and Characteristics:

1. Airflow Configuration: Upflow.
2. Gas:

a. Type: Natural.
b. Minimum Efficiency AFUE: 97.5 percent.
c. Input: 80 MBh.
d. Heat Output: 78 MBh.
e. Gas Connection Size: 1/2 NPS.
f. Combustion-Air Inlet Size: 2 inches.
g. Combustion-Air Inlet Material: PVC.
h. Heat-Exchanger Condensate Drain Size: 3/4 NPS.
i. Vent Size: 2 inches.
j. Vent Material: PVC.

3. Fan:

a. Airflow: 620-1730 cfm.
b. External Static Pressure: 1 inches wg.
c. Motor:

1) Size: 3/4 hp

4. Furnace Electrical Connection:

a. Volts: 120.
b. Phase: 1.
c. Hertz: 60.
d. Full-Load Amperes: 10.1.
e. Maximum Overcurrent Protection: 15.

2.3 THERMOSTATS

A. Controls shall comply with requirements in ASHRAE/IES 90.1, Section 6 - "Heating, Ventilating, and Air Conditioning."

B. Solid-State, Combination Thermostat and Humidistat: Wall-mounted, programmable, microprocessor-based unit with automatic switching from heating to cooling and humidifying to dehumidifying, preferential rate control, seven-day programmability with minimum of four temperature presets per day, vacation mode, and battery backup protection against power failure for program settings.

2.4 AIR FILTERS

A. Washable Filters: 1-inch- (25-mm-) thick urethane pad.

B. Disposable Filters: 2-inch- (50-mm-) thick fiberglass media with ASHRAE 52.2 MERV rating of 8 or higher, in sheet metal frame.

C. Charged Media Air Filters: Sheet metal housing arranged to be ducted in return-air duct connection to furnace; generates electrostatic charge; MERV 10 rating.

PART 3 - EXECUTION

3.1 EXAMINATION

A. Examine areas and conditions, with Installer present, for compliance with requirements for installation tolerances and other conditions affecting performance of the Work.

B. Examine factory-installed insulation before furnace installation. Reject units that are wet, moisture damaged, or mold damaged.

C. Examine roughing-in for gas and refrigerant piping systems to verify actual locations of piping connections before equipment installation.

D. Proceed with installation only after unsatisfactory conditions have been corrected.

3.2 INSTALLATION

A. Install gas-fired furnaces and associated fuel and vent features and systems according to NFPA 54.

B. Suspended Units: Suspend from structure using threaded rods, spring hangers, and building attachments. Secure rods to unit hanger attachments. Adjust hangers so unit is level and plumb.

1. Install seismic restraints to limit movement of furnace by resisting code-required seismic acceleration.

C. Base-Mounted Units: Secure units to substrate. Provide optional bottom closure base if required by installation conditions.

1. Anchor furnace to substrate to resist code-required seismic acceleration.

D. Controls: Install thermostats and humidistats at mounting height of 48 inches above floor.

E. Wiring Method: Install control wiring in accessible ceiling spaces and in gypsum board partitions where unenclosed wiring method may be used. Conceal control wiring except in unfinished spaces.

F. Install ground-mounted, compressor-condenser components on 6-inch-thick, reinforced concrete base; 6 inches larger on each side than unit. Concrete, reinforcement, and formwork are specified in Section 033000 "Cast-in-Place Concrete." Coordinate anchor installation with concrete base.

G. Install ground-mounted compressor-condenser components on polyethylene mounting base.

3.3 PIPING CONNECTIONS

A. Gas piping installation requirements are specified in Section 231123 "Facility Natural-Gas Piping." Drawings indicate general arrangement of piping, fittings, and specialties. Connect gas piping with union or flange and appliance connector valve.

B. Install piping adjacent to equipment to allow service and maintenance.

C. Vent and Outside-Air Connection, Condensing, Gas-Fired Furnaces: Connect plastic piping vent material to furnace connections and extend outdoors. Terminate vent outdoors with a cap and in an arrangement that will protect against entry of birds, insects, and dirt.

1. Ream ends of pipes and tubes and remove burrs. Bevel plain ends of steel pipe.
2. Remove scale, slag, dirt, and debris from inside and outside of pipe and fittings before assembly.
3. Plastic Piping Solvent-Cement Joints: Clean and dry joining surfaces. Join pipe and fittings according to the following:

    a. Comply with ASTM F402 for safe-handling practice of cleaners, primers, and solvent cements.
    b. CPVC Piping: Join according to ASTM D2846/D2846M, Appendix.
    c. PVC Pressure Piping: Join schedule number ASTM D1785 PVC pipe and PVC socket fittings according to ASTM D2672. Join other-than-schedule-number PVC pipe and socket fittings according to ASTM D2855.

4. Slope pipe vent back to furnace or to outside terminal.

D. Connect refrigerant tubing kits to refrigerant coil in furnace and to air-cooled compressor-condenser unit.
1. Brazed Joints: Construct joints according to AWS's "Brazing Handbook," "Pipe and Tube" Chapter, using copper-phosphorus brazing filler metal complying with AWS A5.8/A5.8M.

E. Comply with requirements in Section 232300 "Refrigerant Piping" for installation and joint construction of refrigerant piping.

3.4 DUCTWORK CONNECTIONS

A. Connect ducts to furnace with flexible connector. Comply with requirements in Section 233300 "Air Duct Accessories."

3.5 ELECTRICAL CONNECTIONS

A. Connect wiring according to Section 260519 "Low-Voltage Electrical Power Conductors and Cables."

B. Ground equipment according to Section 260526 "Grounding and Bonding for Electrical Systems."

C. Install electrical devices furnished by manufacturer, but not factory mounted, according to NFPA 70 and NECA 1.

D. Install nameplate for each electrical connection, indicating electrical equipment designation and circuit number feeding connection.
   1. Nameplate shall be laminated acrylic or melamine plastic signs with a black background and engraved white letters at least 1/2 inch (13 mm) high.

3.6 CONTROL CONNECTIONS

A. Install control and electrical power wiring to field-mounted control devices.

B. Connect control wiring according to Section 260523 "Control-Voltage Electrical Power Cables."

3.7 STARTUP SERVICE

A. Complete installation and startup checks according to manufacturer's written instructions and perform the following:

   1. Inspect for physical damage to unit casings.
   2. Verify that access doors move freely and are weathertight.
   3. Clean units and inspect for construction debris.
   4. Verify that all bolts and screws are tight.
   5. Adjust vibration isolation and flexible connections.
   6. Verify that controls are connected and operational.

B. Start unit according to manufacturer's written instructions and complete manufacturer's operational checklist.

C. Measure and record airflows.

D. Verify proper operation of capacity control device.

3.8 ADJUSTING

A. Adjust initial temperature and humidity set points.

B. Set controls, burner, and other adjustments for optimum heating performance and efficiency. Adjust heat-distribution features, including shutters, dampers, and relays, to provide optimum heating performance and system efficiency.

3.9 CLEANING

A. After completing installation, clean furnaces internally according to manufacturer's written instructions.

B. Install new filters in each furnace within 14 days after Substantial Completion.

3.10 FIELD QUALITY CONTROL

A. Perform the following tests and inspections:

1. Perform electrical test and visual and mechanical inspection.
2. Leak Test: After installation, charge systems with refrigerant and test for leaks. Repair leaks, replace lost refrigerant, and retest until no leaks exist.
3. Operational Test: After electrical circuitry has been energized, start units to confirm proper operation, product capability, and compliance with requirements.
4. Verify that fan wheel is rotating in the correct direction and is not vibrating or binding.
5. Test and adjust controls and safeties. Replace damaged and malfunctioning controls and equipment.

B. Verify that vibration isolation and flexible connections properly dampen vibration transmission to structure.

3.11 DEMONSTRATION

A. Train Owner's maintenance personnel to adjust, operate, and maintain condensing units. Refer to Section 017900 "Demonstration and Training."

END OF SECTION 235416.13

SECTION 236313 - AIR-COOLED REFRIGERANT CONDENSERS

PART 1 - GENERAL

1.1 RELATED DOCUMENTS

1.2 SUMMARY

A. Section Includes:

1. Packaged air-cooled refrigerant condensers.

1.3 ACTION SUBMITTALS

A. Product Data: For each air-cooled refrigerant condenser.

1. Include rated capacities, operating characteristics, furnished specialties, and accessories.
2. Include equipment dimensions, weights and structural loads, required clearances, method of field assembly, components, and location and size of each field connection.

B. Shop Drawings: For air-cooled refrigerant condensers.

1. Include plans, elevations, sections, and mounting details.
2. Include details of equipment assemblies. Indicate dimensions, weights, loads, required clearances, method of field assembly, components, and location and size of each field connection.
3. Include diagrams for power, signal, and control wiring.

1.4 INFORMATIONAL SUBMITTALS

A. Coordination Drawings: Plans, or BIM model, drawn to scale, showing the items described in this Section, and coordinated with all building trades.

B. Seismic Qualification Data: For air-cooled refrigerant condensers, accessories, and components, from manufacturer.

1. Basis for Certification: Indicate whether withstand certification is based on actual test of assembled components or on calculation.
2. Dimensioned Outline Drawings of Equipment Unit: Identify center of gravity and locate and describe mounting and anchorage provisions.
3. Detailed description of equipment anchorage devices on which the certification is based and their installation requirements.

C. Field quality-control reports.

1.5 CLOSEOUT SUBMITTALS

A. Operation and Maintenance Data: For air-cooled refrigerant condensers to include in emergency, operation, and maintenance manuals.

1.6 COORDINATION

A. Coordinate size and location of concrete bases. Cast anchor-bolt inserts into bases. Concrete, reinforcement, and formwork requirements are specified in Section 033000 "Cast-in-Place Concrete."

B. Coordinate location of refrigerant piping and electrical rough-ins.

PART 2 - PRODUCTS

2.1 MANUFACTURERS

A. Lennox

B. Source Limitations: Obtain air-cooled refrigerant condensers from single source from single manufacturer.

2.2 PERFORMANCE REQUIREMENTS

A. Electrical Components, Devices, and Accessories: Listed and labeled as defined in NFPA 70, by an NRTL, and marked for intended location and application.

B. Fabricate and label refrigeration system according to ASHRAE 15 and ASHRAE 34.

C. ASHRAE/IES 90.1 Compliance: Applicable requirements in ASHRAE/IES 90.1, Section 6 - "Heating, Ventilating, and Air-Conditioning."

D. Seismic Performance: Air-cooled refrigerant condensers shall withstand the effects of earthquake motions determined according to ASCE/SEI 7.

1. The term "withstand" means "the unit will remain in place without separation of any parts from the device when subjected to the seismic forces specified and the unit will be fully operational after the seismic event."
2. Component Importance Factor: 1.0.

E. Capacities and Characteristics:

1. Heat-Rejection Capacity: 14 MBh (kW).
2. Refrigerant Pipe Connections:

a. Number of Connections: 1.
b. Liquid Pipe Size: 1/8 NPS (6 DN).
c. Suction Pipe Size: 1/2 NPS (15 DN).

3. Coils:
    a. Number of Rows: 2.
    b. Fin Spacing: 20 fins/inch (3.0 mm).

4. Fans:

    a. Number of Condenser Fans: 1
    b. Diameter: 22 inches (mm).
    c. RPM: 825
    d. Total Airflow: 3600 cfm (L/s).
    e. Condenser Fan Motor Size: 1/4 hp.

5. Electrical Characteristics:

    a. Watts: 310 W
    b. Volts: 208/230 V
    c. Phase: 3 ph
    d. Hertz: 60 Hz
    e. Minimum Circuit Ampacity: 18.9 A.
    f. Maximum Overcurrent Protection: 20 A.

2.3 PACKAGED AIR-COOLED REFRIGERANT CONDENSERS

A. Description: Factory assembled and tested; consisting of casing, condenser coils, condenser fans and motors, and unit controls.

B. Refrigerant: R-410A

1. Tube: 5/16-inch- (8-mm-) diameter seamless copper.
2. Coil Fin: Aluminum.
3. Motors: Comply with NEMA designation, temperature rating, service factor, enclosure type, and efficiency requirements for motors.

    a. Enclosure Type: Open, drip-proof (ODP).
    b. Motor Sizes: Minimum size as indicated. If not indicated, large enough, so driven load will not require motor to operate in service factor range above 1.0.

C. Condenser Fans and Drives:

1. Directly driven propeller fans with galvanized-steel fan blades, for vertical air discharge; manufactured with permanently lubricated ball-bearing motors with integral current- and thermal-overload protection.

2. Fan Motors:

    a. Weather-proof motors with rain shield and shaft slinger.
    b. Open-drip proof (ODP).

2.4 MATERIALS

A. Steel:

1. ASTM A36/A36M for carbon structural steel.

B. Stainless Steel:

1. Manufacturer's standard grade for casing.
2. Manufacturer's standard type, ASTM A240/A240M for bare steel exposed to airstream or moisture.

C. Galvanized Steel: ASTM A653/A653M.

D. Aluminum: ASTM B209 (ASTM B209M).

E. Corrosion-Resistant Coating: Coat with a corrosion-resistant coating capable of withstanding a 500-hour salt-spray test according to ASTM B117.

1. Standards:

a. ASTM B117 for salt spray.
b. ASTM D2794 for minimum impact resistance of 100 in-lb (11.3 N-m).
c. ASTM B3359 for cross hatch adhesion of 5B.

PART 3 - EXECUTION

3.1 EXAMINATION

A. Examine substrates, areas, and conditions, with Installer present, for compliance with requirements for installation tolerances and other conditions affecting performance of air-cooled refrigerant condensers.

B. Examine roughing-in for refrigerant piping systems to verify actual locations of piping connections before equipment installation.

C. Examine walls, floors, and roofs for suitable conditions where air-cooled condensers will be installed.

D. Proceed with installation only after unsatisfactory conditions have been corrected.

3.2 INSTALLATION

A. Install units level and plumb, firmly anchored in locations indicated; maintain manufacturer's recommended clearances.

B. Equipment Mounting:

1. Install air-cooled condenser refrigerant condensers on cast-in-place concrete equipment bases. Comply with requirements for equipment bases and foundations specified in Section 033000 "Cast-in-Place Concrete."
2. Comply with requirements for vibration isolation and seismic-control devices specified in Section 230548 "Vibration and Seismic Controls for HVAC."

C. Maintain manufacturer's recommended clearances for service and maintenance.

D. Loose Components: Install electrical components, devices, and accessories that are not factory mounted.

3.3 PIPING CONNECTIONS

A. Piping installation requirements are specified in Section 232300 "Refrigerant Piping." Drawings indicate general arrangement of piping, fittings, and specialties.

B. Install piping adjacent to machine to allow service and maintenance.

C. Refrigerant Piping: Where indicated on Drawings, connect piping to unit with pressure-relief, service valve, filter-dryer, and moisture indicator on each refrigerant-circuit liquid line.

3.4 ELECTRICAL CONNECTIONS

A. Install field power to each condenser unit electrical power connection.

B. Connect wiring in accordance with Section 260519 "Low-Voltage Electrical Power Conductors and Cables."

C. Install electrical devices furnished by manufacturer, but not factory mounted, in accordance with NFPA 70 and NECA 1.

D. Install nameplate for each electrical connection, indicating electrical equipment designation and circuit number feeding connection.

3.5 CONTROL CONNECTIONS

A. Install control and electrical power wiring to field-mounted control devices.

B. Connect control wiring in accordance with Section 260523 "Control-Voltage Electrical Power Cables."

C. Install nameplate for each control connection, indicating field control panel designation and I/O control designation feeding connection.

3.6 STARTUP SERVICE

A. Engage a factory-authorized service representative to perform startup service.

1. Complete installation and startup checks according to manufacturer's written instructions and perform the following:

    a. Inspect for physical damage to unit casing.
    b. Verify that access doors move freely and are weathertight.
    c. Clean units and inspect for construction debris.
    d. Verify that all bolts and screws are tight.
    e. Adjust vibration isolation and flexible connections.
    f. Verify that controls are connected and operational.

3.7 FIELD QUALITY CONTROL

A. Manufacturer's Field Service: Engage a factory-authorized service representative to test and inspect components, assemblies, and equipment installations, including connections.

B. Perform tests and inspections with the assistance of a factory-authorized service representative.

C. Tests and Inspections:

1. Perform electrical test and visual and mechanical inspection.
2. Leak Test: After installation, charge system and test for leaks. Repair leaks and retest until no leaks exist.
3. Operational Test: After electrical circuitry has been energized, start units to confirm proper motor rotation and unit operation. Complete manufacturer's starting checklist.
4. Test and adjust controls and safeties. Replace damaged and malfunctioning controls and equipment.
5. Verify proper airflow over coils.

D. Verify that vibration isolation and flexible connections properly dampen vibration transmission to structure.

E. Air-cooled refrigerant condensers will be considered defective if they do not pass tests and inspections.

F. Prepare test and inspection reports.

3.8 DEMONSTRATION

A. Engage a factory-authorized service representative to train Owner's maintenance personnel to adjust, operate, and maintain air-cooled refrigerant condensers.

END OF SECTION 236313

SECTION 238216.13 - REFRIGERANT AIR COILS

PART 1 - GENERAL

1.1 SUMMARY

A. Section Includes:

1. Refrigerant air coils.

1.2 ACTION SUBMITTALS

A. Product Data: For each type of product.

1. Include construction details, material descriptions, dimensions of individual components and profiles, and finishes for each air coil.
2. Include rated capacities, operating characteristics, and pressure drops for each air coil.

1.3 INFORMATIONAL SUBMITTALS

A. Coordination Drawings: Floor plans, sections, and other details, or BIM model, drawn to scale, showing the items described in this Section and coordinated with all building trades.

1.4 CLOSEOUT SUBMITTALS

A. Operation and Maintenance Data: For air coils to include in operation and maintenance manuals.

PART 2 - PRODUCTS

2.1 PERFORMANCE REQUIREMENTS

A. ASHRAE 62.1 Compliance: Comply with applicable requirements in ASHRAE 62.1, Section 5, "Systems and Equipment," and Section 7, "Construction and Startup."

B. Performance Ratings: Tested and rated in accordance with AHRI 410 and ASHRAE 33.

C. Select cooling coils for no moisture carryover at design conditions. Provide moisture eliminators on discharge face of cooling coil if necessary to eliminate moisture carryover.

D. Capacities and Characteristics:

1. Number of Rows: 3

2. Coating: Lennox, Quantum Coil
3. Air Side:
   a. Static Pressure Drop: <0.2 in WC
   b. Total Capacity: 60,000 Btu/h (kW).

4. Refrigerant Side:

   a. Refrigerant Type: R-410A

2.2 REFRIGERANT AIR COILS

A. Lennox Quantum Coils CX35 or approved equal

B. Source Limitations: Obtain refrigerant coils from single source from single manufacturer.

C. Description: Plate fin coils constructed of staggered tubes mechanically expanded into continuous collars that are die-formed into plate fins. Coils are to be counterflow circuited and equipped with pressure-type distributors, and distributor tubes are to be of equal length, to ensure equal distribution of refrigerant to each circuit.

D. Tubes:

1. Material: Aluminum
2. Nominal Diameter: Selected for performance indicated.
3. Return Bends: 180-degree bends; material and nominal diameter to match tubes.
4. Brazing: High-temperature brazing alloy with not less than 5 percent silver.

E. Fins:

1. Type: Plate.
2. Materials:
   a. Aluminum

3. Spacing: Maximum 16 fins per inch
4. Collars: Full collars for accurate fin spacing and maximum tube contact while leaving no surface of tube exposed.
5. Configuration: Laced Fins
6. Fin and Tube Joint: Silver brazed.

F. Headers:

1. Material: Aluminum
2. Tube-to-Header Connections: Tube-to-header holes to intrude inward, so landed surface area is 3 times the core tube thickness, to provide enhanced header-to-tube joint integrity. Evenly extend tubes within the ID of the header no more than 0.12 inch (3 mm).
3. Header Top and Bottom Caps: End caps to be die-formed and installed on the ID of header, such that the landed surface area is 3 times the header wall thickness.
4. Protect openings to prevent entry of dirt into coil.

G. Holes: Include number, size, and location of holes in casing and end tube sheets required for coil installation.

H. Hardware: Use hex-head bolts, nuts, and washers constructed of Type 304stainless steel.

I. Nameplate: Aluminum or stainless steel nameplate with brass or stainless steel chain for each coil, with the following data engraved or embossed:

1. Manufacturer name, address, telephone number, and website address.
2. Manufacturer model number.
3. Serial number.
4. Manufacturing date.
5. Coil fin: Aluminum
6. Coil tube: Aluminum
7. Coil header: Aluminum

2.3 MATERIALS

A. Aluminum: ASTM B209 (ASTM B209M).

B. Galvanized Steel: ASTM A653/A653M.

C. Stainless Steel: ASTM A240/A240M.

D. Steel: ASTM A53/A53M.

2.4 SOURCE QUALITY CONTROL

A. Coils to display a tag with inspector's identification as proof of testing.

PART 3 - EXECUTION

3.1 EXAMINATION

A. Examine ducts, plenums, and casings to receive air coils for compliance with requirements for installation tolerances and other conditions affecting coil performance.

B. Examine roughing-in for piping systems to verify actual locations of piping connections before coil installation.

C. Proceed with installation only after unsatisfactory conditions have been corrected.

3.2 INSTALLATION

A. Install coils level and plumb.

B. Install coils in metal ducts and casings constructed in accordance with SMACNA's "HVAC Duct Construction Standards, Metal and Flexible."

C. Install stainless steel drain pan under each cooling coil.

1. Construct drain pans with connection for drain; insulated and complying with ASHRAE 62.1.
2. Construct drain pans to extend beyond coil length and width and to connect to condensate trap and drainage.
3. Extend drain pan upstream and downstream from coil face.
4. Extend drain pan under coil headers and exposed supply piping.

D. Install moisture eliminators for cooling coils. Extend drain pan under moisture eliminator.

E. Straighten bent fins on air coils.

F. Clean coils using materials and methods recommended in writing by manufacturers, and clean inside of casings and enclosures to remove dust and debris.

3.3 PIPING CONNECTIONS

A. Piping installation requirements are specified in other Sections. Drawings indicate general arrangement of piping, fittings, and specialties.

B. Install piping adjacent to coils to allow service and maintenance.

C. Connect refrigerant piping according to Section 232300 "Refrigerant Piping."

END OF SECTION 238216.13

SECTION 260519 - LOW-VOLTAGE ELECTRICAL POWER CONDUCTORS AND CABLES

PART 1 - GENERAL

1.1 SUMMARY

A. Section Includes:

1. Copper building wire.
2. Connectors and splices.

1.2 ACTION SUBMITTALS

A. Product Data: For each type of product.

B. Product Schedule: Indicate type, use, location, and termination locations.

PART 2 - PRODUCTS

2.1 COPPER BUILDING WIRE

A. Description: Flexible, insulated and uninsulated, drawn copper current-carrying conductor with an overall insulation layer or jacket, or both, rated 600 V or less.

B. Manufacturers: Subject to compliance with requirements, provide products by one of the following:

1. Alcan Products Corporation; Alcan Cable Division.
2. Alpha Wire.
3. Belden Inc.
4. Encore Wire Corporation.
5. General Cable Technologies Corporation.
6. Southwire Incorporated.
7. Or equal.

C. Standards:

1. Listed and labeled as defined in NFPA 70, by a qualified testing agency, and marked for intended location and use.
2. Conductor and Cable Marking: Comply with wire and cable marking according to UL's "Wire and Cable Marking and Application Guide."

D. Conductors: Copper, complying with ASTM B3 for bare annealed copper and with ASTM B8 for stranded conductors.

E. Conductor Insulation:

1. Type THHN: Comply with UL 83.

2.2 CONNECTORS AND SPLICES

A. Description: Factory-fabricated connectors, splices, and lugs of size, ampacity rating, material, type, and class for application and service indicated; listed and labeled as defined in NFPA 70, by a qualified testing agency, and marked for intended location and use.

B. Manufacturers: Subject to compliance with requirements, provide products by one of the following:

1. AFC Cable Systems, Inc.
2. Gardner Bender.
3. Hubbell Power Systems, Inc..
4. Ideal Industries, Inc..
5. Ilsco; a branch of Bardes Corporation.
6. NSi Industries LLC
7. O-Z/Gedney; a brand of the EGS Electrical Group.
8. 3M; Electrical Markets Division.
9. Tyco Electronics.
10. Or equal.

C. Lugs: One piece, seamless, designed to terminate conductors specified in this Section.

1. Material: Copper.
2. Type: Two hole with standard barrels.
3. Termination: Compression.

PART 3 - EXECUTION

3.1 CONDUCTOR MATERIAL APPLICATIONS

A. Feeders:

1. Copper; solid for No. 10 AWG and smaller; stranded for No. 8 AWG and larger.

B. Branch Circuits:

1. Copper. Solid for No. 10 AWG and smaller; stranded for No. 8 AWG and larger.
2. Copper. Solid for No. 12 AWG and smaller; stranded for No. 10 AWG and larger.

3.2 CONDUCTOR INSULATION AND MULTICONDUCTOR CABLE APPLICATIONS AND WIRING METHODS

A. Exposed Branch Circuits, Including in Crawlspaces: Type THHN/THWN-2, single conductors in raceway.

B. Branch Circuits Concealed in Ceilings, Walls, and Partitions: Type THHN/THWN-2, single conductors in raceway.

3.3 INSTALLATION, GENERAL

A. Conceal cables in finished walls, ceilings, and floors unless otherwise indicated.

B. Complete raceway installation between conductor and cable termination points according to Section 260533 "Raceways and Boxes for Electrical Systems" prior to pulling conductors and cables.

C. Use manufacturer-approved pulling compound or lubricant where necessary; compound used must not deteriorate conductor or insulation. Do not exceed manufacturer's recommended maximum pulling tensions and sidewall pressure values.

D. Use pulling means, including fish tape, cable, rope, and basket-weave wire/cable grips, that will not damage cables or raceway.

E. Install exposed cables parallel and perpendicular to surfaces of exposed structural members, and follow surface contours where possible.

F. Support cables according to Section 260529 "Hangers and Supports for Electrical Systems."

3.4 CONNECTIONS

A. Tighten electrical connectors and terminals according to manufacturer's published torque-tightening values. If manufacturer's torque values are not indicated, use those specified in UL 486A-486B.

B. Make splices, terminations, and taps that are compatible with conductor material and that possess equivalent or better mechanical strength and insulation ratings than unspliced conductors.

C. Wiring at Outlets: Install conductor at each outlet, with at least 6 inch (150 mm) of slack.

3.5 IDENTIFICATION

A. Identify and color-code conductors and cables according to Section 260553 "Identification for Electrical Systems."

B. Identify each spare conductor at each end with identity number and location of other end of conductor, and identify as spare conductor.

3.6 FIRESTOPPING

A. Apply firestopping to electrical penetrations of fire-rated floor and wall assemblies to restore original fire-resistance rating of assembly according to Section 078413 "Penetration Firestopping."

3.7 FIELD QUALITY CONTROL

A. Tests and Inspections:

1. After installing conductors and cables and before electrical circuitry has been energized, test service entrance and feeder conductors for compliance with requirements.

2. Perform each of the following visual and electrical tests:

a. Inspect exposed sections of conductor and cable for physical damage and correct connection according to the single-line diagram.
b. Test bolted connections for high resistance using one of the following:

1) A low-resistance ohmmeter.
2) Calibrated torque wrench.
3) Thermographic survey.

c. Inspect compression-applied connectors for correct cable match and indentation.
d. Inspect for correct identification.
e. Inspect cable jacket and condition.
f. Insulation-resistance test on each conductor for ground and adjacent conductors. Apply a potential of 500 V(dc) for 300 V rated cable and 1000 V(dc) for 600 V rated cable for a one-minute duration.
g. Continuity test on each conductor and cable.
h. Uniform resistance of parallel conductors.

B. Cables will be considered defective if they do not pass tests and inspections.

C. Prepare test and inspection reports to record the following:

1. Procedures used.
2. Results that comply with requirements.
3. Results that do not comply with requirements, and corrective action taken to achieve compliance with requirements.

END OF SECTION 260519

SECTION 260523 - CONTROL-VOLTAGE ELECTRICAL POWER CABLES

PART 1 - GENERAL

1.1 SUMMARY

A. Section Includes:

1. Category 6 balanced twisted pair cable.
2. Balanced twisted pair cable hardware.
3. Control cable.
4. Control-circuit conductors.

1.2 INFORMATIONAL SUBMITTALS

A. Source quality-control reports.

B. Field quality-control reports.

PART 2 - PRODUCTS

2.1 PERFORMANCE REQUIREMENTS

A. Electrical Components, Devices, and Accessories: Listed and labeled as defined in NFPA 70, by a qualified testing agency, and marked for intended location and application.

B. Flame Travel and Smoke Density in Plenums: As determined by testing identical products according to NFPA 262, by a qualified testing agency. Identify products for installation in plenums with appropriate markings of applicable testing agency.

1. Flame Travel Distance: 60 inch (1520 mm) or less.
2. Peak Optical Smoke Density: 0.5 or less.
3. Average Optical Smoke Density: 0.15 or less.

C. Flame Travel and Smoke Density for Riser Cables in Non-Plenum Building Spaces: As determined by testing identical products according to UL 1666.

D. Flame Travel and Smoke Density for Cables in Non-Riser Applications and Non-Plenum Building Spaces: As determined by testing identical products according to UL 1685.

2.2 CATEGORY 6 BALANCED TWISTED PAIR CABLE

A. Description: Four-pair, balanced-twisted pair cable, certified to meet transmission characteristics of Category 6 cable at frequencies up to 250 MHz.

B. Manufacturers: Subject to compliance with requirements, provide products by one of the following:

1. ADC.
2. Alpha Wire Company; a division of Belden Inc.
3. Belden Inc.
4. CommScope, Inc.
5. Draka Cableteq USA.
6. Genesis Cable Products; Honeywell International, Inc.
7. Mohawk; a division of Belden Inc.
8. Nexans; Berk-Tek Products.
9. Siemon Company (The).
10. Superior Essex Inc.
11. SYSTIMAX Solutions; a CommScope, Inc. brand.
12. 3M.
13. Tyco Electronics/AMP Netconnect; Tyco International Ltd.
14. Or equal.

C. Standard: Comply with NEMA WC 66/ICEA S-116-732 and TIA-568-C.2 for Category 6 cables.

D. Conductors: 100 ohm, No. 23 AWG solid copper.

E. Shielding/Screening: Unshielded twisted pairs (UTP).

F. Cable Rating: Plenum.

G. Jacket: Yellow thermoplastic.

2.3 BALANCED TWISTED PAIR CABLE HARDWARE

A. Description: Hardware designed to connect, splice, and terminate balanced twisted pair copper communications cable.

B. Manufacturers: Subject to compliance with requirements, provide products by one of the following:

1. ADC.
2. American Technology Systems Industries, Inc.
3. Belden, Inc.
4. Dynacom Inc.
5. Hubbell Incorporated.
6. Leviton Commercial Networks Division.
7. Molex Premise Networks; a division of Molex, Inc.
8. Planduit Corp.
9. Siemon Company (The).
10. Tyco Electronics/AMP Netconnect; Tyco International Ltd.
11. Or equal.

C. General Requirements for Balanced Twisted Pair Cable Hardware:

1. Comply with the performance requirements of Category 6.
2. Comply with TIA-568-C.2, IDC type, with modules designed for punch-down caps or tools.
3. Cables must be terminated with connecting hardware of same category or higher.

D. Source Limitations: Obtain balanced twisted pair cable hardware from single source from single manufacturer.

E. Connecting Blocks: 110-style IDC for Category 6. Provide blocks for the number of cables terminated on the block, plus 25 percent spare, integral with connector bodies, including plugs and jacks where indicated.

F. Cross-Connect: Modular array of connecting blocks arranged to terminate building cables and permit interconnection between cables.

1. Number of Terminals per Field: One for each conductor in assigned cables.

G. Patch Panel: Modular panels housing numbered jack units with IDC-type connectors at each jack location for permanent termination of pair groups of installed cables.

1. Features:

a. Universal T568A and T568B wiring labels.
b. Labeling areas adjacent to conductors.
c. Replaceable connectors.
d. 24 or 48 ports.

2. Construction: 16-gauge steel and mountable on 19 inch (483 mm) equipment racks.
3. Number of Jacks per Field: One for each four-pair cable indicated.

H. Patch Cords: Factory-made, four-pair cables in 36 inch (900 mm) lengths; terminated with an eight-position modular plug at each end.

1. Patch cords must have bend-relief-compliant boots and color-coded icons to ensure performance. Patch cords must have latch guards to protect against snagging.

I. Plugs and Plug Assemblies:

1. Male; eight position; color-coded modular telecommunications connector designed for termination of a single four-pair 100 ohm unshielded or shielded balanced twisted pair cable.
2. Comply with IEC 60603-7-1, IEC 60603-7-2, IEC 60603-7-3, IEC 60603-7-4, and IEC 60603-7.5.
3. Marked to indicate transmission performance.

J. Jacks and Jack Assemblies:

1. Female; eight position; modular; fixed telecommunications connector designed for termination of a single four-pair 100 ohm unshielded or shielded balanced twisted pair cable.
2. Designed to snap-in to a patch panel or faceplate.
3. Standards:

    a. Category 6, unshielded balanced twisted pair cable must comply with IEC 60603-7-4.
    b. Category 6, unshielded balanced twisted pair cable must comply with IEC 60603-7-4.

K. Faceplate:

1. Two port, vertical single-gang faceplates designed to mount to single-gang wall boxes.
2. Plastic Faceplate: High-impact plastic. Coordinate color with Section 262726 "Wiring Devices."
3. For use with snap-in jacks accommodating any combination of balanced twisted pair, optical fiber, and coaxial work area cords.

    a. Flush mounting jacks, positioning the cord at a 45-degree angle.

L. Legend:

1. Machine printed, in the field, using adhesive-tape label.
2. Snap-in, clear-label covers and machine-printed paper inserts.

2.4 CONTROL CABLE

A. Paired Cable: NFPA 70, Type CMG.

1. One Multi-pair, twisted, No. 16 AWG, stranded (19x29) tinned-copper conductors.
2. PVC insulation.
3. Unshielded.
4. PVC jacket.
5. Flame Resistance: Comply with UL 1685.

B. Plenum-Rated, Paired Cable: NFPA 70, Type CMP.

1. One Multi-pair, twisted, No. 16 AWG, stranded (19x29) tinned-copper conductors.
2. PVC insulation.
3. Unshielded.
4. PVC jacket.
5. Flame Resistance: Comply with NFPA 262.

2.5 CONTROL-CIRCUIT CONDUCTORS

A. Manufacturers: Subject to compliance with requirements, provide products by one of the following:

1. Encore Wire Corporation.
2. General Cable Technologies Corporation.
3. Southwire Company.
4. Or equal.

B. Class 1 Control Circuits: Stranded copper, Type THHN/THWN-2, complying with UL 83 in raceway.

C. Class 2 Control Circuits: Stranded copper, Type THHN/THWN-2, complying with UL 83 in raceway.

D. Class 3 Remote-Control and Signal Circuits: Stranded copper, Type THHN/THWN-2, complying with UL 83 in raceway.

E. Class 2 Control Circuits and Class 3 Remote-Control and Signal Circuits That Supply Critical Circuits: Circuit Integrity (CI) cable.

1. Smoke control signaling and control circuits.

2.6 SOURCE QUALITY CONTROL

A. Testing Agency: Engage a qualified testing agency to evaluate cables.

B. Factory test twisted pair cables according to TIA-568-C.2.

C. Cable will be considered defective if it does not pass tests and inspections.

D. Prepare test and inspection reports.

PART 3 - EXECUTION

3.1 EXAMINATION

A. Test cables on receipt at Project site.

1. Test each pair of twisted pair cable for open and short circuits.

3.2 INSTALLATION OF RACEWAYS AND BOXES

A. Comply with requirements in Section 260533 "Raceways and Boxes for Electrical Systems" for raceway selection and installation requirements for boxes, conduits, and wireways as supplemented or modified in this Section.

1. Outlet boxes must be no smaller than 2 inch (50 mm) wide, 3 inch (75 mm) high, and 2-1/2 inch (64 mm) deep.
2. Flexible metal conduit must not be used.

B. Comply with TIA-569-D for pull-box sizing and length of conduit and number of bends between pull points.

C. Install manufactured conduit sweeps and long-radius elbows if possible.

3.3 INSTALLATION OF CONDUCTORS AND CABLES

A. Comply with NECA 1.

B. General Requirements for Cabling:

1. Comply with TIA-568-C Series of standards.
2. Comply with BICSI ITSIMM, Ch. 5, "Copper Structured Cabling Systems."
3. Terminate all conductors; cable must not contain unterminated elements. Make terminations only at indicated outlets, terminals, and cross-connect and patch panels.
4. Cables may not be spliced and must be continuous from terminal to terminal. Do not splice cable between termination, tap, or junction points.
5. Cables serving a common system may be grouped in a common raceway. Install network cabling and control wiring and cable in separate raceway from power wiring. Do not group conductors from different systems or different voltages.
6. Secure and support cables at intervals not exceeding 30 inch (760 mm) and not more than 6 inch (150 mm) from cabinets, boxes, fittings, outlets, racks, frames, and terminals.
7. Bundle, lace, and train conductors to terminal points without exceeding manufacturer's limitations on bending radii, but not less than radii specified in BICSI ITSIMM, Ch. 5, "Copper Structured Cabling Systems." Install lacing bars and distribution spools.
8. Do not install bruised, kinked, scored, deformed, or abraded cable. Remove and discard cable if damaged during installation and replace it with new cable.
9. Cold-Weather Installation: Bring cable to room temperature before dereeling. Do not use heat lamps for heating.
10. Pulling Cable: Comply with BICSI ITSIMM, Ch. 5, "Copper Structured Cabling Systems." Monitor cable pull tensions.
11. Support: Do not allow cables to lie on removable ceiling tiles.
12. Secure: Fasten securely in place with hardware specifically designed and installed so as to not damage cables.
13. Provide strain relief.
14. Keep runs short. Allow extra length for connecting to terminals. Do not bend cables in a radius less than 10 times the cable OD. Use sleeves or grommets to protect cables from vibration at points where they pass around sharp corners and through penetrations.
15. Ground wire must be copper, and grounding methods must comply with IEEE C2. Demonstrate ground resistance.

C. Balanced Twisted Pair Cable Installation:

1. Comply with TIA-568-C.2.
2. Install termination hardware as specified in Section 271513 "Communications Copper Horizontal Cabling" unless otherwise indicated.
3. Do not untwist balanced twisted pair cables more than 1/2 inch (12 mm) at the point of termination to maintain cable geometry.

D. Installation of Control-Circuit Conductors:

1. Install wiring in raceways.
2. Use insulated spade lugs for wire and cable connection to screw terminals.
3. Comply with requirements specified in Section 260533 "Raceways and Boxes for Electrical Systems."

E. Open-Cable Installation:

1. Install cabling with horizontal and vertical cable guides in telecommunications spaces with terminating hardware and interconnection equipment.
2. Suspend copper cable not in a wireway or pathway a minimum of 8 inch (200 mm) above ceilings by cable supports not more than 30 inch (760 mm) apart.
3. Cable must not be run through or on structural members or in contact with pipes, ducts, or other potentially damaging items. Do not run cables between structural members and corrugated panels.

F. Installation of Cable Routed Exposed under Raised Floors:

1. Install plenum-rated cable only.
2. Install cabling after the flooring system has been installed in raised floor areas.
3. Below each feed point, neatly coil a minimum of 72 inch (1830 mm) of cable in a coil not less than 12 inch (305 mm) in diameter.

3.4 REMOVAL OF CONDUCTORS AND CABLES

A. Remove abandoned conductors and cables. Abandoned conductors and cables are those installed that are not terminated at equipment and are not identified with a tag for future use.

3.5 CONTROL-CIRCUIT CONDUCTORS

A. Minimum Conductor Sizes:

1. Class 1 remote-control and signal circuits; No 14 AWG.
2. Class 2 low-energy, remote-control, and signal circuits; No. 16 AWG.
3. Class 3 low-energy, remote-control, alarm, and signal circuits; No 12 AWG.

3.6 FIRESTOPPING

A. Comply with requirements in Section 078413 "Penetration Firestopping."

B. Comply with TIA-569-D, Annex A, "Firestopping."

C. Comply with BICSI TDMM, "Firestopping" Chapter.

3.7 GROUNDING

A. For control-voltage wiring and cabling, comply with requirements in Section 260526 "Grounding and Bonding for Electrical Systems."

3.8 IDENTIFICATION

A. Comply with requirements for identification specified in Section 260553 "Identification for Electrical Systems."

B. Identify data and communications system components, wiring, and cabling according to TIA-606-B; label printers must use label stocks, laminating adhesives, and inks complying with UL 969.

C. Identify each wire on each end and at each terminal with a number-coded identification tag. Each wire must have a unique tag.

3.9 FIELD QUALITY CONTROL

A. Tests and Inspections:

1. Visually inspect cable jacket materials for UL or third-party certification markings. Inspect cabling terminations to confirm color-coding for pin assignments, and inspect cabling connections to confirm compliance with TIA-568-C.1.
2. Visually inspect cable placement, cable termination, grounding and bonding, equipment and patch cords, and labeling of all components.
3. Test cabling for direct-current loop resistance, shorts, opens, intermittent faults, and polarity between conductors. Test operation of shorting bars in connection blocks. Test cables after termination, but not after cross-connection.

    a. Test instruments must meet or exceed applicable requirements in TIA-568-C.2. Perform tests with a tester that complies with performance requirements in its "Test Instruments (Normative)" Annex, complying with measurement accuracy specified in its "Measurement Accuracy (Informative)" Annex. Use only test cords and adapters that are qualified by test equipment manufacturer for channel or link test configuration.

B. Document data for each measurement. Print data for submittals in a summary report that is formatted using Table 10.1 in BICSI TDMM as a guide, or transfer the data from the instrument to the computer, save as text files, print, and submit.

C. End-to-end cabling will be considered defective if it does not pass tests and inspections.

D. Prepare test and inspection reports.

END OF SECTION 260523

SECTION 260529 - HANGERS AND SUPPORTS FOR ELECTRICAL SYSTEMS

PART 1 - GENERAL

1.1 SUMMARY

A. Section Includes:

1. Support, anchorage, and attachment components.

1.2 ACTION SUBMITTALS

A. Product Data: For each type of product.

1. Include construction details, material descriptions, dimensions of individual components and profiles, and finishes for the following:

a. Slotted support systems, hardware, and accessories.
b. Clamps.
c. Hangers.
d. Sockets.
e. Eye nuts.
f. Fasteners.
g. Anchors.
h. Saddles.
i. Brackets.

2. Include rated capacities and furnished specialties and accessories.

B. Shop Drawings: Signed and sealed by a qualified professional engineer. For fabrication and installation details for electrical hangers and support systems.

1. Hangers. Include product data for components.
2. Slotted support systems.
3. Equipment supports.

1.3 INFORMATIONAL SUBMITTALS

A. Welding certificates.

PART 2 - PRODUCTS

2.1 SUPPORT, ANCHORAGE, AND ATTACHMENT COMPONENTS

A. Steel Slotted Support Systems: Preformed steel channels and angles with minimum 13/32 inch (10 mm) diameter holes at a maximum of 8 inch (200 mm) on center in at least one surface.

1. Available Manufacturers: Subject to compliance with requirements, manufacturers offering products that may be incorporated into the Work include, but are not limited to, the following:
2. Manufacturers: Subject to compliance with requirements, provide products by one of the following:

    a. Allied Tube & Conduit.
    b. Cooper B-Line, Inc.
    c. ERICO International Corporation.
    d. GS Metals Corp.
    e. Thomas & Betts Corporation.
    f. Unistrut; Atkore International.
    g. Wesanco, Inc.
    h. Or equal.

3. Standard: Comply with MFMA-4 factory-fabricated components for field assembly.
4. Material for Channel, Fittings, and Accessories: Stainless steel, Type 304.
5. Channel Width: 1-1/4 inch (31.75 mm).
6. Metallic Coatings: Hot-dip galvanized after fabrication and applied according to MFMA-4.
7. Painted Coatings: Manufacturer's standard painted coating applied according to MFMA- below if retaining "Nonmetallic Coatings" or "Painted Coatings" Subparagraph above.
8. Protect finishes on exposed surfaces from damage by applying a strippable, temporary protective covering before shipping.

B. Conduit and Cable Support Devices: Stainless steel hangers, clamps, and associated fittings, designed for types and sizes of raceway or cable to be supported.

C. Support for Conductors in Vertical Conduit: Factory-fabricated assembly consisting of threaded body and insulating wedging plug or plugs for nonarmored electrical conductors or cables in riser conduits. Plugs must have number, size, and shape of conductor gripping pieces as required to suit individual conductors or cables supported. Body must be made of malleable iron.

D. Structural Steel for Fabricated Supports and Restraints: ASTM A36/A36M steel plates, shapes, and bars; black and galvanized.

E. Mounting, Anchoring, and Attachment Components: Items for fastening electrical items or their supports to building surfaces include the following:

1. Powder-Actuated Fasteners: Threaded-steel stud, for use in hardened portland cement concrete, steel, or wood, with tension, shear, and pullout capacities appropriate for supported loads and building materials where used.

    a. Available Manufacturers: Subject to compliance with requirements, manufacturers offering products that may be incorporated into the Work include, but are not limited to, the following:

b. Manufacturers: Subject to compliance with requirements, provide products by one of the following:

1) Hilti, Inc.
2) ITW Ramset/Red Head; Illinois Tool Works, Inc.
3) MKT Fastening, LLC.
4) Simpson Strong-Tie Co., Inc.
5) Or equal.

2. Mechanical-Expansion Anchors: Insert-wedge-type, stainless steel, for use in hardened portland cement concrete, with tension, shear, and pullout capacities appropriate for supported loads and building materials where used.

a. Available Manufacturers: Subject to compliance with requirements, manufacturers offering products that may be incorporated into the Work include, but are not limited to, the following:
b. Manufacturers: Subject to compliance with requirements, provide products by one of the following:

1) Cooper B-Line, Inc.
2) Empire Tool and Manufacturing Co., Inc.
3) Hilti, Inc.
4) ITW Ramset/Red Head; Illinois Tool Works, Inc.
5) MKT Fastening, LLC.
6) Or equal.

3. Concrete Inserts: Steel or malleable-iron, slotted support system units are similar to MSS Type 18 units and comply with MFMA-4 or MSS SP-58.
4. Clamps for Attachment to Steel Structural Elements: MSS SP-58 units are suitable for attached structural element.
5. Through Bolts: Structural type, hex head, and high strength. Comply with ASTM F3125/F3125M, Grade A325 (Grade A325M).
6. Toggle Bolts: All steel springhead type.
7. Hanger Rods: Threaded steel.

PART 3 - EXECUTION

3.1 SELECTION

A. Comply with the following standards for selection and installation of hangers and supports, except where requirements on Drawings or in this Section are stricter:

1. NECA NEIS 101

B. Comply with requirements for raceways and boxes specified in Section 260533 "Raceway and Boxes for Electrical Systems."

C. Maximum Support Spacing and Minimum Hanger Rod Size for Raceways: Space supports for

EMT, IMC, and ERMC as scheduled in NECA NEIS 1, where its Table 1 lists maximum spacings that are less than those stated in NFPA 70. Minimum rod size must be 1/4 inch (6 mm) in diameter.

D. Spring-steel clamps designed for supporting single conduits without bolts may be used for 1-1/2 inch (38 mm) and smaller raceways serving branch circuits and communication systems above suspended ceilings, and for fastening raceways to trapeze supports.

3.2 INSTALLATION OF SUPPORTS

A. Comply with NECA NEIS 101 for installation requirements except as specified in this article.

B. Raceway Support Methods: In addition to methods described in NECA NEIS 1, EMT and ERMC may be supported by openings through structure members, in accordance with NFPA 70.

C. Strength of Support Assemblies: Where not indicated, select sizes of components so strength will be adequate to carry present and future static loads within specified loading limits. Minimum static design load used for strength determination must be weight of supported components plus 200 lb (90 kg).

D. Mounting and Anchorage of Surface-Mounted Equipment and Components: Anchor and fasten electrical items and their supports to building structural elements by the following methods unless otherwise indicated by code:

1. To Wood: Fasten with lag screws or through bolts.
2. To New Concrete: Bolt to concrete inserts.
3. To Masonry: Approved toggle-type bolts on hollow masonry units and expansion anchor fasteners on solid masonry units.
4. To Existing Concrete: Expansion anchor fasteners.
5. Instead of expansion anchors, powder-actuated driven threaded studs provided with lock washers and nuts may be used in existing standard-weight concrete 4 inch (100 mm) thick or greater. Do not use for anchorage to lightweight-aggregate concrete or for slabs less than 4 inch (100 mm) thick.
6. To Steel: Beam clamps (MSS SP-58, Type 19, 21, 23, 25, or 27), complying with MSS SP-69.
7. To Light Steel: Sheet metal screws.
8. Items Mounted on Hollow Walls and Nonstructural Building Surfaces: Mount cabinets, panelboards, disconnect switches, control enclosures, pull and junction boxes, transformers, and other devices on slotted-channel racks attached to substrate by means that comply with seismic-restraint strength and anchorage requirements.

E. Drill holes for expansion anchors in concrete at locations and to depths that avoid the need for reinforcing bars.

3.3 PAINTING

A. Touchup:

1. Clean field welds and abraded areas of shop paint. Paint exposed areas immediately after erecting hangers and supports. Use same materials as used for shop painting. Comply with SSPC-PA 1 requirements for touching up field-painted surfaces.

    a. Apply paint by brush or spray to provide minimum dry film thickness of 2.0 mils (0.05 mm).

B. Galvanized Surfaces: Clean welds, bolted connections, and abraded areas and apply galvanizing-repair paint to comply with ASTM A780.

END OF SECTION 260529

SECTION 260533 - RACEWAYS AND BOXES FOR ELECTRICAL SYSTEMS

PART 1 - GENERAL

1.1 RELATED DOCUMENTS

A. Drawings and general provisions of the Contract, including General and Supplementary Conditions and Division 01 Specification Sections, apply to this Section.

1.2 SUMMARY

A. Section Includes:

1. Metal conduits, tubing, and fittings.
2. Boxes, enclosures, and cabinets.

1.3 DEFINITIONS

A. ARC: Aluminum rigid conduit.

B. GRC: Galvanized rigid steel conduit.

C. IMC: Intermediate metal conduit.

1.4 ACTION SUBMITTALS

A. Product Data: For surface raceways, wireways and fittings, floor boxes, hinged-cover enclosures, and cabinets.

B. Shop Drawings: Include plans, elevations, sections, and attachment details.

1.5 SHOP DRAWINGS AND INFORMATIONAL SUBMITTALS

A. Shop Drawings: Conduit routing plans, drawn to scale, on which the following items are shown and coordinated with each other, using input from installers of items involved:

1. Structural members in paths of conduit groups with common supports.
2. HVAC and plumbing items and architectural features in paths of conduit groups with common supports.

B. Qualification Data: For professional engineer.

C. Seismic Qualification Certificates: For enclosures, cabinets, and conduit racks and their mounting provisions, including those for internal components, from manufacturer.

1. Basis for Certification: Indicate whether withstand certification is based on actual test of assembled components or on calculation.
2. Dimensioned Outline Drawings of Equipment Unit: Identify center of gravity and locate and describe mounting and anchorage provisions.
3. Detailed description of equipment anchorage devices on which the certification is based and their installation requirements.
4. Detailed description of conduit support devices and interconnections on which the certification is based and their installation requirements.

D. Source quality-control reports.

PART 2 - PRODUCTS

2.1 METAL CONDUITS, TUBING, AND FITTINGS

A. Manufacturers: Subject to compliance with requirements, provide products by one of the following:

1. AFC Cable Systems, Inc.
2. Allied Tube & Conduit.
3. Anamet Electrical, Inc.
4. Electri-Flex Company.
5. O-Z/Gedney.
6. Picoma Industries.
7. Republic Conduit.
8. Robroy Industries.
9. Southwire Company.
10. Thomas & Betts Corporation.
11. Western Tube and Conduit Corporation.
12. Wheatland Tube Company.
13. Or equal.

B. Listing and Labeling: Metal conduits, tubing, and fittings shall be listed and labeled as defined in NFPA 70, by a qualified testing agency, and marked for intended location and application.

C. GRC: Comply with ANSI C80.1 and UL 6.

D. ARC: Not allowed.

E. IMC: Comply with ANSI C80.6 and UL 1242.

F. PVC-Coated Steel Conduit: PVC-coated rigid steel conduit.

1. Comply with NEMA RN 1.
2. Coating Thickness: 0.040 inch (1 mm), minimum.

G. EMT: Comply with ANSI C80.3 and UL 797.

H. LFMC: Flexible steel conduit with PVC jacket and complying with UL 360.

I. Fittings for Metal Conduit: Comply with NEMA FB 1 and UL 514B.

1. Conduit Fittings for Hazardous (Classified) Locations: Comply with UL 886 and NFPA 70.
2. Fittings for EMT:

a. Material: Steel.
b. Type: Setscrew.

3. Expansion Fittings: PVC or steel to match conduit type, complying with UL 651, rated for environmental conditions where installed, and including flexible external bonding jumper.
4. Coating for Fittings for PVC-Coated Conduit: Minimum thickness of 0.040 inch (1 mm), with overlapping sleeves protecting threaded joints.

J. Joint Compound for IMC, GRC, or ARC: Approved, as defined in NFPA 70, by authorities having jurisdiction for use in conduit assemblies, and compounded for use to lubricate and protect threaded conduit joints from corrosion and to enhance their conductivity.

2.2 BOXES, ENCLOSURES, AND CABINETS

A. Manufacturers: Subject to compliance with requirements, provide products by one of the following:

1. Adalet.
2. Cooper Technologies Company; Cooper Crouse-Hinds.
3. EGS/Appleton Electric.
4. Erickson Electrical Equipment Company.
5. FSR Inc.
6. Hoffman.
7. Hubbell Incorporated.
8. Kraloy.
9. Milbank Manufacturing Co.
10. Mono-Systems, Inc.
11. O-Z/Gedney.
12. RACO; Hubbell.
13. Robroy Industries.
14. Spring City Electrical Manufacturing Company.
15. Stahlin Non-Metallic Enclosures.
16. Thomas & Betts Corporation.
17. Wiremold / Legrand.
18. Or equal.

B. General Requirements for Boxes, Enclosures, and Cabinets: Boxes, enclosures, and cabinets installed in wet locations shall be listed for use in wet locations.

C. Sheet Metal Outlet and Device Boxes: Comply with NEMA OS 1 and UL 514A.

D. Cast-Metal Outlet and Device Boxes: Comply with NEMA FB 1, ferrous alloy, Type FD, with gasketed cover.

E. Nonmetallic Outlet and Device Boxes: Comply with NEMA OS 2 and UL 514C.

F. Luminaire Outlet Boxes: Nonadjustable, designed for attachment of luminaire weighing 50 lb (23 kg). Outlet boxes designed for attachment of luminaires weighing more than 50 lb (23 kg) shall be listed and marked for the maximum allowable weight.

G. Small Sheet Metal Pull and Junction Boxes: NEMA OS 1.

H. Cast-Metal Access, Pull, and Junction Boxes: Comply with NEMA FB 1 and UL 1773, galvanized, cast iron with gasketed cover.

I. Box extensions used to accommodate new building finishes shall be of same material as recessed box.

J. Device Box Dimensions: 4 inches square by 2-1/8 inches deep (100 mm square by 60 mm deep).

K. Gangable boxes are prohibited.

L. Hinged-Cover Enclosures: Comply with UL 50 and NEMA 250, Type 1, with continuous-hinge cover with flush latch unless otherwise indicated.

1. Metal Enclosures: Steel, finished inside and out with manufacturer's standard enamel.
2. Nonmetallic Enclosures: Plastic.
3. Interior Panels: Steel; all sides finished with manufacturer's standard enamel.

M. Cabinets:

1. NEMA 250, Type 1 galvanized-steel box with removable interior panel and removable front, finished inside and out with manufacturer's standard enamel.
2. Hinged door in front cover with flush latch and concealed hinge.
3. Key latch to match panelboards.
4. Metal barriers to separate wiring of different systems and voltage.
5. Accessory feet where required for freestanding equipment.
6. Nonmetallic cabinets shall be listed and labeled as defined in NFPA 70, by a qualified testing agency, and marked for intended location and application.

PART 3 - EXECUTION

3.1 RACEWAY APPLICATION

A. Outdoors: Apply raceway products as specified below unless otherwise indicated:

1. Exposed Conduit: GRC.
2. Concealed Conduit, Aboveground: EMT.

3. Underground Conduit: RNC,Type EPC-40-PVC.
4. Connection to Vibrating Equipment (Including Transformers and Hydraulic, Pneumatic, Electric Solenoid, or Motor-Driven Equipment): LFMC.
5. Boxes and Enclosures, Aboveground: NEMA 250, Type 3R.

B. Indoors: Apply raceway products as specified below unless otherwise indicated:

1. Exposed, Not Subject to Physical Damage: RNC.
2. Exposed, Not Subject to Severe Physical Damage: EMT
3. Exposed and Subject to Severe Physical Damage: GRC. Raceway locations include the following:

    a. Loading dock.
    b. Corridors used for traffic of mechanized carts, forklifts, and pallet-handling units.
    c. Mechanical rooms.
    d. Gymnasiums.

4. Concealed in Ceilings and Interior Walls and Partitions: EMT
5. Connection to Vibrating Equipment (Including Transformers and Hydraulic, Pneumatic, Electric Solenoid, or Motor-Driven Equipment): FMC, except use LFMC in damp or wet locations.
6. Damp or Wet Locations: GRC.
7. Boxes and Enclosures: NEMA 250, Type 1, except use NEMA 250, Type 4 stainless steel in institutional and commercial kitchens and damp or wet locations.

C. Minimum Raceway Size: 3/4-inch (21-mm) trade size.

D. Raceway Fittings: Compatible with raceways and suitable for use and location.

1. Rigid and Intermediate Steel Conduit: Use threaded rigid steel conduit fittings unless otherwise indicated. Comply with NEMA FB 2.10.
2. PVC Externally Coated, Rigid Steel Conduits: Use only fittings listed for use with this type of conduit. Patch and seal all joints, nicks, and scrapes in PVC coating after installing conduits and fittings. Use sealant recommended by fitting manufacturer and apply in thickness and number of coats recommended by manufacturer.
3. EMT: Use setscrew, steel fittings. Comply with NEMA FB 2.10.
4. Flexible Conduit: Use only fittings listed for use with flexible conduit. Comply with NEMA FB 2.20.

E. Install nonferrous conduit or tubing for circuits operating above 60 Hz. Where aluminum raceways are installed for such circuits and pass through concrete, install in nonmetallic sleeve.

F. Do not install aluminum conduits, boxes, or fittings in contact with concrete or earth.

G. Install surface raceways only where indicated on Drawings.

3.2 INSTALLATION

A. Comply with NECA 1 and NECA 101 for installation requirements except where requirements

on Drawings or in this article are stricter. Comply with NECA 102 for aluminum conduits. Comply with NFPA 70 limitations for types of raceways allowed in specific occupancies and number of floors.

B. Keep raceways at least 6 inches (150 mm) away from parallel runs of flues and steam or hot-water pipes. Install horizontal raceway runs above water and steam piping.

C. Complete raceway installation before starting conductor installation.

D. Comply with requirements in Section 260529 "Hangers and Supports for Electrical Systems" for hangers and supports.

E. Install no more than the equivalent of three 90-degree bends in any conduit run except for control wiring conduits, for which fewer bends are allowed. Support within 12 inches (300 mm) of changes in direction.

F. Conceal conduit and EMT within finished walls, ceilings, and floors unless otherwise indicated. Install conduits parallel or perpendicular to building lines.

G. Support conduit within 12 inches (300 mm) of enclosures to which attached.

H. Stub-ups to Above Recessed Ceilings:

1. Use EMT, IMC, or RMC for raceways.
2. Use a conduit bushing or insulated fitting to terminate stub-ups not terminated in hubs or in an enclosure.

I. Threaded Conduit Joints, Exposed to Wet, Damp, Corrosive, or Outdoor Conditions: Apply listed compound to threads of raceway and fittings before making up joints. Follow compound manufacturer's written instructions.

J. Raceway Terminations at Locations Subject to Moisture or Vibration: Use insulating bushings to protect conductors including conductors smaller than No. 4 AWG.

K. Terminate threaded conduits into threaded hubs or with locknuts on inside and outside of boxes or cabinets. Install bushings on conduits up to 1-1/4-inch (35mm) trade size and insulated throat metal bushings on 1-1/2-inch (41-mm) trade size and larger conduits terminated with locknuts. Install insulated throat metal grounding bushings on service conduits.

L. Install raceways square to the enclosure and terminate at enclosures with locknuts. Install locknuts hand tight plus 1/4 turn more.

M. Do not rely on locknuts to penetrate nonconductive coatings on enclosures. Remove coatings in the locknut area prior to assembling conduit to enclosure to assure a continuous ground path.

N. Cut conduit perpendicular to the length. For conduits 2-inch (53-mm) trade size and larger, use roll cutter or a guide to make cut straight and perpendicular to the length.

O. Install pull wires in empty raceways. Use polypropylene or monofilament plastic line with not less than 200-lb (90-kg) tensile strength. Leave at least 12 inches (300 mm) of slack at each end

of pull wire. Cap underground raceways designated as spare above grade alongside raceways in use.

P. Surface Raceways:

1. Install surface raceway with a minimum 2-inch (50-mm) radius control at bend points.
2. Secure surface raceway with screws or other anchor-type devices at intervals not exceeding 48 inches (1200 mm) and with no less than two supports per straight raceway section. Support surface raceway according to manufacturer's written instructions. Tape and glue are not acceptable support methods.

Q. Install raceway sealing fittings at accessible locations according to NFPA 70 and fill them with listed sealing compound. For concealed raceways, install each fitting in a flush steel box with a blank cover plate having a finish similar to that of adjacent plates or surfaces. Install raceway sealing fittings according to NFPA 70.

R. Install devices to seal raceway interiors at accessible locations. Locate seals so no fittings or boxes are between the seal and the following changes of environments. Seal the interior of all raceways at the following points:

1. Where conduits pass from warm to cold locations, such as boundaries of refrigerated spaces.
2. Where an underground service raceway enters a building or structure.
3. Where otherwise required by NFPA 70.

S. Comply with manufacturer's written instructions for solvent welding RNC and fittings.

T. Expansion-Joint Fittings:

1. Install in each run of aboveground RNC that is located where environmental temperature change may exceed 30 deg F (17 deg C) and that has straight-run length that exceeds 25 feet (7.6 m). Install in each run of aboveground RMC and EMT conduit that is located where environmental temperature change may exceed 100 deg F (55 deg C) and that has straight-run length that exceeds 100 feet (30 m).
2. Install type and quantity of fittings that accommodate temperature change listed for each of the following locations:

    a. Outdoor Locations Not Exposed to Direct Sunlight: 125 deg F (70 deg C) temperature change.
    b. Outdoor Locations Exposed to Direct Sunlight: 155 deg F (86 deg C) temperature change.
    c. Indoor Spaces Connected with Outdoors without Physical Separation: 125 deg F (70 deg C) temperature change.
    d. Attics: 135 deg F (75 deg C) temperature change.

3. Install fitting(s) that provide expansion and contraction for at least 0.00041 inch per foot of length of straight run per deg F (0.06 mm per meter of length of straight run per deg C) of temperature change for PVC conduits. Install fitting(s) that provide expansion and contraction for at least 0.000078 inch per foot of length of straight run per deg F (0.0115 mm per meter of length of straight run per deg C) of temperature change for

metal conduits.

4. Install expansion fittings at all locations where conduits cross building or structure expansion joints.
5. Install each expansion-joint fitting with position, mounting, and piston setting selected according to manufacturer's written instructions for conditions at specific location at time of installation. Install conduit supports to allow for expansion movement.

U. Flexible Conduit Connections: Comply with NEMA RV 3. Use a maximum of 72 inches (1830 mm) of flexible conduit for recessed and semirecessed luminaires, equipment subject to vibration, noise transmission, or movement; and for transformers and motors.

1. Use LFMC in damp or wet locations subject to severe physical damage.
2. Use LFMC or LFNC in damp or wet locations not subject to severe physical damage.

V. Mount boxes at heights indicated on Drawings. If mounting heights of boxes are not individually indicated, give priority to ADA requirements. Install boxes with height measured to center top bottom of box unless otherwise indicated.

W. Recessed Boxes in Masonry Walls: Saw-cut opening for box in center of cell of masonry block, and install box flush with surface of wall. Prepare block surfaces to provide a flat surface for a raintight connection between box and cover plate or supported equipment and box.

X. Horizontally separate boxes mounted on opposite sides of walls so they are not in the same vertical channel.

Y. Locate boxes so that cover or plate will not span different building finishes.

Z. Support boxes of three gangs or more from more than one side by spanning two framing members or mounting on brackets specifically designed for the purpose.

AA. Fasten junction and pull boxes to or support from building structure. Do not support boxes by conduits.

3.3 SLEEVE AND SLEEVE-SEAL INSTALLATION FOR ELECTRICAL PENETRATIONS

A. Install sleeves and sleeve seals at penetrations of exterior floor and wall assemblies.

3.4 FIRESTOPPING

A. Install firestopping at penetrations of fire-rated floor and wall assemblies.

3.5 PROTECTION

A. Protect coatings, finishes, and cabinets from damage and deterioration.

1. Repair damage to galvanized finishes with zinc-rich paint recommended by manufacturer.

2. Repair damage to PVC coatings or paint finishes with matching touchup coating recommended by manufacturer.

END OF SECTION 260533

THIS PAGE IS INTENTIONALLY LEFT BLANK

SECTION 260553 - IDENTIFICATION FOR ELECTRICAL SYSTEMS

PART 1 - GENERAL

1.1 SUMMARY

A. Section Includes:

1. Labels.
2. Bands and tubes.
3. Tapes and stencils.
4. Tags.
5. Signs.
6. Cable ties.
7. Miscellaneous identification products.

1.2 ACTION SUBMITTALS

A. Product Data:

1. Include construction details, material descriptions, dimensions of individual components and profiles, and finishes for electrical identification products.

B. Samples: For each type of label and sign to illustrate composition, size, colors, lettering style, mounting provisions, and graphic features of identification products.

C. Identification Schedule: For each piece of electrical equipment and electrical system components to be index of nomenclature for electrical equipment and system components used in identification signs and labels. Use same designations indicated on Drawings.

PART 2 - PRODUCTS

2.1 PERFORMANCE REQUIREMENTS

A. Comply with ASME A13.1 and IEEE C2.

B. Comply with 29 CFR 1910.144 for color identification of hazards; 29 CFR 1910.145 for danger, caution, warning, and safety instruction signs and tags; and the following:

1. Fire-protection equipment**,** including raceways, must be finished, painted, or suitably marked safety red.
2. Ceiling-mounted hangers, supports, cable trays, and raceways must be finished, painted, or suitably marked safety yellow where less than 7.7 ft (2.3 m) above finished floor.

C. Signs, labels, and tags required for personnel safety must comply with the following standards:

1. Safety Colors: NEMA Z535.1.
2. Facility Safety Signs: NEMA Z535.2.
3. Safety Symbols: NEMA Z535.3.
4. Product Safety Signs and Labels: NEMA Z535.4.
5. Safety Tags and Barricade Tapes for Temporary Hazards: NEMA Z535.5.

D. Comply with NFPA 70E requirements for arc-flash warning labels.

E. Adhesive-attached labeling materials, including label stocks, laminating adhesives, and inks used by label printers, must comply with UL 969.

F. Thermal Movements: Allow for thermal movements from ambient and surface temperature changes.

1. Temperature Change: 120 deg F (67 deg C), ambient; 180 deg F (100 deg C), material surfaces.

2.2 COLOR AND LEGEND REQUIREMENTS

A. Raceways and Cables Carrying Circuits at 1000 V or Less:

1. Black letters on orange field.
2. Legend: Indicate voltage and system or service type.

B. Color-Coding for Phase- and Voltage-Level Identification, 1000 V or Less: Use colors listed below for ungrounded feeder and branch-circuit conductors.

1. Color must be factory applied or field applied for sizes larger than 8 AWG if authorities having jurisdiction permit.
2. Colors for 208Y/120 V Circuits:

    a. Phase A: Black.
    b. Phase B: Red.
    c. Phase C: Blue.

3. Colors for 240 V Circuits:

    a. Phase A: Black.
    b. Phase B: Red.

4. Colors for 480Y/277 V Circuits:

    a. Phase A: Brown.
    b. Phase B: Orange.
    c. Phase C: Yellow.

5. Color for Neutral: White.
6. Color for Equipment Grounds: Green.
7. Colors for Isolated Grounds: Green with two or more yellow stripes.

C. Raceways and Cables Carrying Circuits at More Than 1000 V:

1. Black letters on orange field.
2. Legend: "DANGER - CONCEALED HIGH VOLTAGE WIRING."

D. Warning Label Colors:

1. Identify system voltage with black letters on orange background.

E. Warning labels and signs must include, but are not limited to, the following legends:

1. Multiple Power Source Warning: "DANGER - ELECTRICAL SHOCK HAZARD - EQUIPMENT HAS MULTIPLE POWER SOURCES."

F. Equipment Identification Labels:

1. Black letters on white field.

2.3 LABELS

A. Self-Adhesive Labels: Vinyl, thermal, transfer-printed, 3 mil (0.08 mm) thick, multicolor, weather- and UV-resistant, pressure-sensitive adhesive labels, configured for intended use and location.

1. Manufacturers:

a. Seton.
b. Brady.
c. Or equal.

2. Minimum Nominal Size:

a. 1-1/2 by 6 inch (37 by 150 mm) for raceway and conductors.
b. 3-1/2 by 5 inch (76 by 127 mm) for equipment.
c. As required by authorities having jurisdiction.

2.4 CABLE TIES

A. General-Purpose Cable Ties: Fungus inert, self-extinguishing, one piece, self-locking, and Type 6/6 nylon.

1. Minimum Width: 3/16 inch (5 mm).
2. Tensile Strength at 73 deg F (23 deg C) in accordance with ASTM D638: 12,000 psi (82.7 MPa).
3. Temperature Range: Minus 40 to plus 185 deg F (Minus 40 to plus 85 deg C).
4. Color: Black, except where used for color-coding.

B. UV-Stabilized Cable Ties: Fungus inert, designed for continuous exposure to exterior sunlight, self-extinguishing, one piece, self-locking, and Type 6/6 nylon.

1. Minimum Width: 3/16 inch (5 mm).
2. Tensile Strength at 73 deg F (23 deg C) in accordance with ASTM D638: 12,000 psi (82.7 MPa).
3. Temperature Range: Minus 40 to plus 185 deg F (Minus 40 to plus 85 deg C).
4. Color: Black.

C. Plenum-Rated Cable Ties: Self-extinguishing, UV stabilized, one piece, and self-locking.

1. Minimum Width: 3/16 inch (5 mm).
2. Tensile Strength at 73 deg F (23 deg C) in accordance with ASTM D638: 7000 psi (48.2 MPa).
3. UL 94 Flame Rating: 94V-0.
4. Temperature Range: Minus 50 to plus 284 deg F (Minus 46 to plus 140 deg C).
5. Color: Black.

2.5 MISCELLANEOUS IDENTIFICATION PRODUCTS

A. Paint: Comply with requirements in painting Sections for paint materials and application requirements. Retain paint system applicable for surface material and location (exterior or interior).

B. Fasteners for Labels and Signs: Self-tapping, stainless steel screws or stainless steel machine screws with nuts and flat and lock washers.

PART 3 - EXECUTION

3.1 PREPARATION

A. Self-Adhesive Identification Products: Before applying electrical identification products, clean substrates of substances that could impair bond, using materials and methods recommended by manufacturer of identification product.

3.2 INSTALLATION

A. Verify and coordinate identification names, abbreviations, colors, and other features with requirements in other Sections requiring identification applications, Drawings, Shop Drawings, manufacturer's wiring diagrams, and operation and maintenance manual. Use consistent designations throughout Project.

B. Install identifying devices before installing acoustical ceilings and similar concealment.

C. Verify identity of item before installing identification products.

D. Coordinate identification with Project Drawings, manufacturer's wiring diagrams, and operation and maintenance manual.

E. Apply identification devices to surfaces that require finish after completing finish work.

F. Install signs with approved legend to facilitate proper identification, operation, and maintenance of electrical systems and connected items.

G. System Identification for Raceways and Cables under 1000 V: Identification must completely encircle cable or conduit. Place identification of two-color markings in contact, side by side.

1. Secure tight to surface of conductor, cable, or raceway.

H. System Identification for Raceways and Cables over 1000 V: Identification must completely encircle cable or conduit. Place adjacent identification of two-color markings in contact, side by side.

1. Secure tight to surface of conductor, cable, or raceway.

I. Auxiliary Electrical Systems Conductor Identification: Identify field-installed alarm, control, and signal connections.

J. Emergency Operating Instruction Signs: Install instruction signs with white legend on red background with minimum 3/8 inch (10 mm) high letters for emergency instructions at equipment used for power transfer.

K. Elevated Components: Increase sizes of labels, signs, and letters to those appropriate for viewing from floor.

L. Accessible Fittings for Raceways: Identify cover of junction and pull box of the following systems with wiring system legend and system voltage. System legends must be as follows:

1. "EMERGENCY POWER."
2. "POWER."
3. "UPS."

M. Self-Adhesive Labels:

1. Install unique designation label that is consistent with wiring diagrams, schedules, and operation and maintenance manual.
2. Unless otherwise indicated, provide single line of text with 1/2 inch (13 mm) high letters on 1-1/2 inch (38 mm) high label; where two lines of text are required, use labels 2 inch (50 mm) high.

N. Self-Adhesive Vinyl Tape: Secure tight to surface at location with high visibility and accessibility.

1. Field-Applied, Color-Coding Conductor Tape: Apply in half-lapped turns for minimum distance of 6 inch (150 mm) where splices or taps are made. Apply last two turns of tape with no tension to prevent possible unwinding.

O. Cable Ties: General purpose, for attaching tags, except as listed below:

1. Outdoors: UV-stabilized nylon.
2. In Spaces Handling Environmental Air: Plenum rated.

3.3 IDENTIFICATION SCHEDULE

A. Install identification materials and devices at locations for most convenient viewing without interference with operation and maintenance of equipment. Install access doors or panels to provide view of identifying devices.

B. Identify conductors, cables, and terminals in enclosures and at junctions, terminals, pull points, and locations of high visibility. Identify by system and circuit designation.

C. Accessible Raceways and Metal-Clad Cables, 1000 V or Less, for Service, Feeder, and Branch Circuits, More Than 30 A and 120 V to Ground: Identify with self-adhesive raceway labels.

1. Locate identification at changes in direction, at penetrations of walls and floors, at 50 ft (15 m) maximum intervals in straight runs, and at 25 ft (7.6 m) maximum intervals in congested areas.

D. Accessible Fittings for Raceways and Cables within Buildings: Identify cover of junction and pull box of the following systems with self-adhesive labels containing wiring system legend and system voltage. System legends must be as follows:

1. "EMERGENCY POWER."
2. "POWER."
3. "UPS."

E. Control-Circuit Conductor Identification: For conductors and cables in pull and junction boxes, manholes, and handholes, use self-adhesive labels with conductor or cable designation, origin, and destination.

F. Control-Circuit Conductor Termination Identification: For identification at terminations, provide self-adhesive labels with conductor designation.

G. Locations of Underground Lines: Underground-line warning tape for power, lighting, communication, and control wiring and optical-fiber cable.

H. Concealed Raceways and Duct Banks, More Than 1000 V, within Buildings: Apply floor marking tape to the following finished surfaces:

1. Floor surface directly above conduits running beneath and within 12 inch (300 mm) of floor that is in contact with earth or is framed above unexcavated space.
2. Wall surfaces directly external to raceways concealed within wall.
3. Accessible surfaces of concrete envelope around raceways in vertical shafts, exposed in building, or concealed above suspended ceilings.

END OF SECTION 260553

SECTION 262816 - ENCLOSED SWITCHES AND CIRCUIT BREAKERS

PART 1 - GENERAL

1.1 SUMMARY

A. Section Includes:

1. Nonfusible switches.
2. Enclosures.

1.2 DEFINITIONS

A. GFEP: Ground-fault circuit-interrupter for equipment protection.

B. GFLS: Ground-fault circuit-interrupter for life safety.

C. SPDT: Single pole, double throw.

1.3 ACTION SUBMITTALS

A. Product Data:

1. For each type of enclosed switch, circuit breaker, accessory, and component indicated. Include nameplate ratings, dimensioned elevations, sections, weights, and manufacturers' technical data on features, performance, electrical characteristics, ratings, accessories, and finishes.
2. Enclosure types and details for types other than UL 50E, Type 1.
3. Current and voltage ratings.
4. Short-circuit current ratings (interrupting and withstand, as appropriate).
5. Include evidence of qualified electrical testing laboratory listing for series rating of installed devices.
6. Detail features, characteristics, ratings, and factory settings of individual overcurrent protective devices, accessories, and auxiliary components.

B. Shop Drawings: For enclosed switches and circuit breakers.

1. Include plans, elevations, sections, details, and attachments to other work.
2. Include wiring diagrams for power, signal, and control wiring.

C. Field Quality-Control Submittals:

1. Field quality-control reports.

1.4 INFORMATIONAL SUBMITTALS

A. Sample warranties.

1.5 CLOSEOUT SUBMITTALS

A. Warranty documentation.

1.6 MAINTENANCE MATERIAL SUBMITTALS

A. Spare Parts: Furnish to Owner spare parts, for repairing enclosed switches and circuit breakers, that are packaged with protective covering for storage on-site and identified with labels describing contents. Include the following:

1. Fuses: Equal to 10 percent of quantity installed for each size and type, but no fewer than three of each size and type.
2. Fuse Pullers: Two for each size and type.

1.7 WARRANTY

A. Special Installer Extended Warranty: Installer warrants that fabricated and installed enclosed switches and circuit breakers perform in accordance with specified requirements and agrees to repair or replace components or products that fail to perform as specified within extended-warranty period.

1. Extended-Warranty Period: Two years from date of Substantial Completion; full coverage for labor, materials, and equipment.

B. Special Manufacturer Extended Warranty: Manufacturer warrants that enclosed switches and circuit breakers perform in accordance with specified requirements and agrees to provide repair or replacement of components or products that fail to perform as specified within extended-warranty period.

1. Extended-Warranty Period: Three years from date of Substantial Completion.

PART 2 - PRODUCTS

2.1 GENERAL REQUIREMENTS

A. Product Selection for Restricted Space: Drawings indicate maximum dimensions for enclosed switches and circuit breakers, including clearances between enclosures, and adjacent surfaces and other items. Comply with indicated maximum dimensions.

B. Electrical Components, Devices, and Accessories: Listed and labeled in accordance with NFPA 70, by qualified electrical testing laboratory recognized by authorities having jurisdiction, and marked for intended location and application.

2.2 NONFUSIBLE SWITCHES

A. Manufacturers:

1. Schneider Electric (Square D).
2. Eaton
3. GE
4. Or approved equal.

B. Type HD, Heavy Duty, Three Pole, Single Throw, 600 V(ac), 1200 A and Smaller: UL 98 and NEMA KS 1, horsepower rated, lockable handle with capability to accept three padlocks, and interlocked with cover in closed position.

C. Accessories:

1. Equipment Ground Kit: Internally mounted and labeled for copper and aluminum ground conductors.
2. Class R Fuse Kit: Provides rejection of other fuse types when Class R fuses are specified.
3. Auxiliary Contact Kit: One NO/NC (Form "C") auxiliary contact(s), arranged to activate before switch blades open. Contact rating - 24 V(ac).
4. Lugs: Compression type, suitable for number, size, and conductor material.

2.3 ENCLOSURES

A. Enclosed Switches and Circuit Breakers: UL 489, NEMA KS 1, UL 50E, and UL 50, to comply with environmental conditions at installed location.

PART 3 - EXECUTION

3.1 EXAMINATION

A. Examine elements and surfaces to receive enclosed switches and circuit breakers for compliance with installation tolerances and other conditions affecting performance of the Work.

B. Proceed with installation only after unsatisfactory conditions have been corrected.

1. Commencement of work will indicate Installer's acceptance of areas and conditions as satisfactory.

3.2 SELECTION OF ENCLOSURES

A. Outdoor Locations: UL 50E, Type 3R.

3.3 INSTALLATION

A. Comply with manufacturer's published instructions.

B. Special Techniques:

1. Coordinate layout and installation of switches, circuit breakers, and components with equipment served and adjacent surfaces. Maintain required workspace clearances and required clearances for equipment access doors and panels.
2. Install individual wall-mounted switches and circuit breakers with tops at uniform height unless otherwise indicated.
3. Comply with mounting and anchoring requirements specified in Section 260548.16 "Seismic Controls for Electrical Systems."
4. Temporary Lifting Provisions: Remove temporary lifting of eyes, channels, and brackets and temporary blocking of moving parts from enclosures and components.
5. Install fuses in fusible devices.

3.4 IDENTIFICATION

A. Comply with requirements in Section 260553 "Identification for Electrical Systems."

1. Identify field-installed conductors, interconnecting wiring, and components; provide warning signs.
2. Label each enclosure with engraved metal or laminated-plastic nameplate.

3.5 FIELD QUALITY CONTROL

A. Field tests and inspections must be witnessed by Owner.

B. Tests and Inspections for Switches:

1. Visual and Mechanical Inspection:

a. Inspect physical and mechanical condition.
b. Inspect anchorage, alignment, grounding, and clearances.
c. Verify that unit is clean.
d. Verify blade alignment, blade penetration, travel stops, and mechanical operation.
e. Verify that fuse sizes and types match the Specifications and Drawings.
f. Verify that each fuse has adequate mechanical support and contact integrity.
g. Inspect bolted electrical connections for high resistance using one of the following methods:

1) Use low-resistance ohmmeter.

a) Compare bolted connection resistance values to values of similar connections. Investigate values that deviate from those of similar bolted connections by more than 50 percent of lowest value.

2) Verify tightness of accessible bolted electrical connections by calibrated torque-wrench method in accordance with manufacturer's published data or NETA ATS Table 100.12.

a) Bolt-torque levels must be in accordance with manufacturer's published data. In absence of manufacturer's published data, use NETA ATS Table 100.12.

h. Verify that operation and sequencing of interlocking systems is as described in the Specifications and shown on Drawings.
i. Verify correct phase barrier installation.
j. Verify lubrication of moving current-carrying parts and moving and sliding surfaces.

2. Electrical Tests:

a. Perform resistance measurements through bolted connections with low-resistance ohmmeter. Compare bolted connection resistance values to values of similar connections. Investigate values that deviate from adjacent poles or similar switches by more than 50 percent of lowest value.
b. Measure contact resistance across each switchblade fuseholder. Drop values may not exceed high level of manufacturer's published data. If manufacturer's published data are not available, investigate values that deviate from adjacent poles or similar switches by more than 50 percent of lowest value.
c. Perform insulation-resistance tests for one minute on each pole, phase-to-phase and phase-to-ground with switch closed, and across each open pole. Apply voltage in accordance with manufacturer's published data. In absence of manufacturer's published data, use Table 100.1 from NETA ATS. Investigate values of insulation resistance less than those published in Table 100.1 or as recommended in manufacturer's published data.
d. Measure fuse resistance. Investigate fuse-resistance values that deviate from each other by more than 15 percent.
e. Perform ground fault test in accordance with NETA ATS Section 7.14 "Ground Fault Protection Systems, Low-Voltage."

3. Test and adjust controls, remote monitoring, and safeties.

C. Nonconforming Work:

1. Enclosed switches and circuit breakers will be considered defective if they do not pass tests and inspections.
2. Remove and replace defective units and retest.

D. Collect, assemble, and submit test and inspection reports.

1. Test procedures used.
2. Include identification of each enclosed switch and circuit breaker tested and describe test results.
3. List deficiencies detected, remedial action taken, and observations after remedial action.

3.6 ADJUSTING

A. Adjust moving parts and operable components to function smoothly, and lubricate as recommended by manufacturer.

3.7 PROTECTION

A. After installation, protect enclosed switches and circuit breakers from construction activities. Remove and replace items that are contaminated, defaced, damaged, or otherwise caused to be unfit for use prior to acceptance by Owner.

END OF SECTION 262816

ROLLING HILLS CITY HALL HVAC REPAIR

THE CITY OF ROLLING HILLS, CITY HALL

2 PORTUGUESE BEND RD, ROLLING HILLS, CA 90274

APN. 7569003904

PROJECT NO. 092226

PROJECT DIRECTORY

OWNER

CITY OF ROLLING HILLS
2 PORTUGUESE BEND RD
ROLLING HILLS, CA 90274

ALAN PALERMO
PROJECT MANAGER
(310) 717-3244
alanmpal@gmail.com

PREPARED BY

S&K CONSULTING SERVICES
2233 VIA FERNANDEZ
PALOS VERDES ESTATES, CA 90274
(310) 494-6910

MECHANICAL ENGINEER OF RECORD (PRIMARY)

SAMUEL SIMON, PE
PRINCIPAL MECHANICAL ENGINEER
S&K CONSULTING SERVICES

ELECTRICAL ENGINEER OF RECORD (SUBCONSULTANT)

SEVAG AVANESSIAN, PE
PRINCIPAL ELECTRICAL ENGINEER
JC CHANG & ASSOCIATES

VICINITY MAP



PROJECT BACKGROUND

1. THE HVAC EQUIPMENT AT THE ROLLING HILLS CITY HALL HAS REACHED END OF LIFE. THE EXISTING SYSTEM NO LONGER COMPLIES WITH CURRENT REGULATIONS, INCLUDING SCAQMD EMISSION LIMITS. THE EXISTING DUCTING HAS BEEN DAMAGED BEYOND REPAIR AND HAS RODENT CONTAMINATION.
2. THE EXISTING EQUIPMENT INCLUDES, THREE (3) FURNACES, THREE (3) COOLING COILS, TWO (2) OUTDOOR CONDENSING UNITS, AND ONE (1) ECONOMIZER.
3. THE CITY OF ROLLING HILLS HAS REQUESTED TO REPLACE THE EXISTING SYSTEM AND REPAIR ANY DEFICIENCIES.
4. THE EXISTING BUILDING HAS ASBESTOS AND LEAD CONTAINING MATERIAL 1

SCOPE OF WORK

1. PERFORM LEAD AND ASBESTOS ABATEMENT AS-REQUIRED 1
2. REPLACE EXISTING BUILDING HVAC EQUIPMENT: 3 FURNACES, 3 ECONOMIZERS, AND 3 SPLIT-SYSTEM COOLING COILS.
3. PROVIDE OUTSIDE AIR VENTILATION REQUIRED BY TITLE 24
4. RELOCATE NEW SPLIT SYSTEM OUTDOOR CONDENSING UNITS OUTSIDE ON NEW CONCRETE PAD
5. PROVIDE AND INSTALL NEW ZONE DUCT WITH INSULATION
6. REPLACE BROKEN SECTIONS OF DUCT AND INSULATION
5. REPLACE EXISTING DIFFUSERS WITH REGISTERS WITH DAMPER CONTROL REQUIRED BY CEC
6. REPLACE EXISTING THERMOSTATS WITH NEW HVAC CONTROLS THAT COMPLY WITH TITLE 24
7. PROVIDE DUCT CLEANING FOR EXISTING DUCTING
8. TEST AND AIR BALANCE SYSTEM

APPLICABLE CODES

1. 2022 LOS ANGELES COUNTY BUILDING CODE (LACBC), TITLE 26 (2019 CALIFORNIA BUILDING CODE (CBC), PART 2, TITLE 24 C.C.R. & 2022 LACBC AMENDMENTS)
2. 2022 LOS ANGELES COUNTY ELECTRICAL CODE (LACEC), TITLE 27 (2019 CALIFORNIA ELECTRICAL CODE (CEC), PART 3, TITLE 24 C.C.R. & 2022 LACEC AMENDMENTS)
4. 2022 LOS ANGELES COUNTY PLUMBING CODE (LACPC), TITLE 28 (2019 CALIFORNIA PLUMBING CODE (CPC), PART 5, TITLE 24 C.C.R. & 2022 LACPC AMENDMENTS)
5. 2022 LOS ANGELES COUNTY MECHANICAL CODE (LACMC), TITLE 29 (2019 CALIFORNIA MECHANICAL CODE (CMC), PART 4, TITLE 24 C.C.R. & 2022 LACMC AMENDMENTS)
7. 2022 LOS ANGELES COUNTY FIRE CODE (LACFC), TITLE 32 (2019 CALIFORNIA FIRE CODE, PART 9, TITLE 24 C.C.R. & 2022 LACFC AMENDMENTS)
8. 2022 CALIFORNIA ENERGY CODE (CEC), PART 6, TITLE 24 C.C.R.

SHEET INDEX

NO.	DESCRIPTION	REV	DATE
TITLE			
T0.01	TITLE SHEET	1	12/28/22
T0.02	HAZARDOUS MATERIAL NOTES	1	12/28/22
MECHANICAL			
M0.01	MECHANICAL GENERAL NOTES		
M0.02	MECHANICAL SCHEDULES		
M0.03	TITLE 24 MANDATORY MEASURES		
M0.04	TITLE 24 CERTIFICATE OF COMPLIANCE		
M0.05	TITLE 24 CERTIFICATE OF COMPLIANCE		
M1.01	MECHANICAL DEMOLITION FLOOR PLAN		
M1.02	EXISTING CONDITIONS PHOTOGRAPHS		
M2.01	MECHANICAL NEW WORK FLOOR PLAN		
M3.01	ENLARGED MECHANICAL FLOOR PLAN & SECTIONS		
M4.01	MECHANICAL DETAILS		
M5.01	HVAC SCHEMATIC & CONTROLS		
ELECTRICAL			
E0.01	ELECTRICAL GENERAL NOTES		
E0.02	ELECTRICAL PANEL SCHEDULE		
E1.01	ELECTRICAL DEMOLITION FLOOR PLAN		
E2.01	ELECTRICAL NEW WORK FLOOR PLAN		
E4.01	ELECTRICAL DETAILS		

REFERENCE SYMBOLS

FLOOR PLAN SYMBOLS

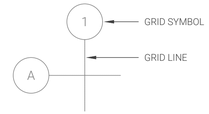

SHEET VIEW SYMBOLS

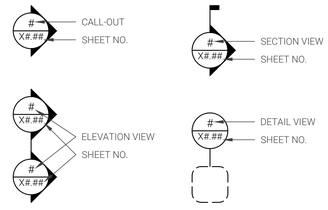

KEYNOTE SYMBOLS

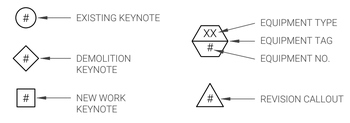

LINE TYPES

EXISTING
DEMOLITION WORK
NEW WORK

S&K CONSULTING SERVICES
2233 Via Fernandez
Palos Verdes Est, CA 90274
p. (310) 494-6910
w. www.skcsi.com

Client

City of Rolling Hills
2 Portuguese Bend Rd
Rolling Hills, CA 90274

Project

ROLLING HILLS CITY HALL HVAC REPAIR

Address

2 PORTUGUESE BEND RD
ROLLING HILLS, CA 90274

Stamp

LICENSED PROFESSIONAL ENGINEER
SAMUEL W. SIMON
M-30818
MECHANICAL
STATE OF CALIFORNIA

Approvals

Project No:	092226
Permit App No:	-
Project Phase:	100% Design
Date:	12/28/2022
Drawn By:	EP
Checked By:	SS
Sheet Size:	24" x 36"

Revisions

No	Date	Description
1	12/28/22	HAZARDOUS MATERIAL ADD.

Sheet Title

TITLE SHEET

Sheet No.

T0.01

DATE: 12/28/2022 4:34 PM
FILE: I:\PROJECTS\2022\092226 - 2 PORTUGUESE BEND RD, ROLLING HILLS, CA 90274 - CITY HALL HVAC REPLACEMENT\CAD\01 TITLE\T0.01 TITLE SHEET.DWG

HAZARDOUS MATERIAL NOTES

1. REFER TO SPECIFICATIONS SECTION FOR FURTHER INFORMATION AND RECOMMENDATIONS REGARDING MITIGATION OF ASBESTOS CONTAINING MATERIALS (ACM'S) AND LEAD BASED PAINT (LBP'S).
2. FURNISH ALL LABOR, MATERIALS, FACILITIES, EQUIPMENT, SERVICES, EMPLOYEE TRAINING AND TESTING, PERMITS, LICENSES AND AGREEMENTS NECESSARY TO PERFORM THE REQUIRED HAZARDOUS MATERIAL ABATEMENT, PAINT STABILIZATION, SELECTIVE DEMOLITION, STRUCTURE DEMOLITION, AND OTHER HAZARDOUS MATERIAL-RELATED CONSTRUCTION WORK OF THE PROJECT IN ACCORDANCE WITH THE CONTRACT SPECIFICATIONS, DRAWINGS, NOTATIONS, AND THE LATEST REGULATIONS FROM THE U.S. ENVIRONMENTAL PROTECTION AGENCY (EPA), SAN JOAQUIN VALLEY AIR QUALITY MANAGEMENT DISTRICT, THE CALIFORNIA DEPARTMENT OF INDUSTRIAL RELATIONS, DIVISION OF OCCUPATIONAL SAFETY AND HEALTH (DOSH, "CAL/OSHA"), CALIFORNIA DEPARTMENT OF PUBLIC HEALTH (CDPH), AND ALL OTHER APPLICABLE FEDERAL, STATE, AND LOCAL GOVERNMENTAL REGULATIONS. WHENEVER THERE IS A CONFLICT OR OVERLAP OF THE ABOVE REFERENCES, THE MOST STRINGENT PROVISION APPLIES.
3. THE HAZARDOUS MATERIALS AT THE SITE INCLUDE:
   A. ASBESTOS IS PRESENT IN EXTERIOR STUCCO, ACOUSTIC CEILING, CEILING PLASTER, WALL PLASTER, AND OTHER PLACES IDENTIFIED IN HAZARDOUS MATERIALS ASSESSMENT ATTACHED IN THE SPECIFICATIONS.
   B. LEAD IS PRESENT IN EGGSHELL AND GRAY STORAGE WALL PAINT (LEAD-BASED), WHITE EXTERIOR PAINT (LEAD-CONTAINING), AND OTHER PLACES IDENTIFIED IN HAZARDOUS MATERIALS ASSESSMENT ATTACHED IN THE SPECIFICATIONS.
4. SPECIFICATIONS HAVE BEEN PREPARED ON THE BASIS OF EXISTING DOCUMENTATION AND SITE INSPECTIONS. LOCATION OF ASBESTOS MATERIALS, LEAD-CONTAINING MATERIALS AND OTHER HAZARDOUS AND NON HAZARDOUS MATERIALS AND COMPONENTS TO BE REMOVED IS GENERAL IN NATURE, AND INTENDED TO PROVIDE AN "APPROXIMATE" INDICATION OF MATERIALS TO BE REMOVED AND EXISTING CONDITIONS.
5. THE SITE WILL BE AVAILABLE FOR EXAMINATION OF EXISTING CONDITIONS. THE CONTRACTOR SHALL REVIEW ALL APPLICABLE CONTRACT DOCUMENTS, VISIT THE SITE, AND VERIFY LOCATION, SIZE AND QUANTITY OF MATERIALS TO BE REMOVED PRIOR TO SUBMISSION OF BID. CHANGE ORDERS WILL NOT BE ALLOWED FOR ANY MATERIAL THAT CAN BE REASONABLY QUANTIFIED FROM PROJECT DRAWINGS OR THROUGH SITE INSPECTION.
6. THE CONTRACTOR SHALL ADHERE TO ALL ASPECTS OF THE PROJECT PLANS AND SPECIFICATIONS. REQUESTS TO DEVIATE FROM ANY ASPECT OF THE PLANS AND SPECIFICATIONS SHALL BE SUBMITTED IN WRITING TO THE OWNER FOR APPROVAL. THE CONTRACTOR SHALL OBTAIN WRITTEN PERMISSION FOR ANY DEVIATIONS.
7. HAZARD COMMUNICATION: THE CONTRACTOR SHALL CONFORM WITH ALL APPLICABLE FEDERAL, STATE AND LOCAL REGULATIONS PERTAINING TO WORKER AND ENVIRONMENTAL PROTECTION WITH REGARD TO ALL KNOWN OR PRESUMED TOXIC OR HAZARDOUS BUILDING MATERIALS WHICH MAY BE PRESENT ON SITE AND INVOLVED IN THE CONTRACTOR'S ABATEMENT, DEMOLITION, LEAD RELATED CONSTRUCTION, CLEAN-UP OR OTHER WORK OF THE PROJECT. THE CONTRACTOR SHALL UTILIZE EQUIPMENT, METHODS AND PROCEDURES THAT MINIMIZE PRODUCTION OF ENVIRONMENTAL EXPOSURES AND HAZARDOUS WASTES TO THE EXTENT POSSIBLE. THE CONTRACTOR SHALL ALSO BE RESPONSIBLE FOR ALL COSTS RESULTING FROM PRODUCTION OF SUCH WASTES AND ENVIRONMENTAL EXPOSURES AT NO ADDITIONAL COST TO THE OWNER.
8. ALL WORKERS AND THEIR SUPERVISORS SHALL BE TRAINED FOR ALL ANTICIPATED HAZARDS INCLUDING ASBESTOS, LEAD, MOLD, AND BIOLOGICAL WASTES. WORKERS AND THEIR SUPERVISORS SHALL BE APPROPRIATELY CERTIFIED FOR ASBESTOS AND LEAD WORK THROUGH CAL/OSHA AND CDPH RESPECTIVELY. ALL WORKERS ENTERING HAZARDOUS MATERIALS WORK AREAS SHALL BE TRAINED AND FITTED FOR SUITABLE RESPIRATORY PROTECTION AND SHALL BE TRAINED REGARDING THE SPECIFIC HEALTH AND SAFETY HAZARDS OF THIS SITE. THE CONTRACTOR IS SOLELY RESPONSIBLE FOR ALL ASPECTS OF CONSTRUCTION HEALTH AND SAFETY AS REQUIRED FOR THE PERFORMANCE OF THIS WORK.
9. HAZARDOUS MATERIAL WORK, INCLUDING CONTAINMENT SET UP AND PREPARATION SHALL NOT START UNTIL THE CONTRACTOR'S HAZARDOUS MATERIALS SUBMITTALS HAVE BEEN APPROVED BY THE OWNER.
10. THE CONTRACTOR SHALL SUBMIT DETAILED HAZARDOUS DEMOLITION AND ABATEMENT SCHEDULE AND PHASING PLAN FOR APPROVAL BY THE OWNER PRIOR TO START UP OF WORK. THE CONTRACTOR SHALL UPDATE SCHEDULE WEEKLY AND WHEN ANY SCHEDULE CHANGES OCCUR OR ARE ANTICIPATED.
11. THE CONTRACTOR SHALL TAKE ALL NECESSARY PROTECTIVE MEASURES INCLUDING PROVIDING PERSONAL PROTECTIVE EQUIPMENT AND SUFFICIENT SAFETY TRAINING TO ALL PERSONNEL RELATED TO THE FOLLOWING ANTICIPATED HAZARDS: ASBESTOS, LEAD, NOISE, HEAT STRESS; ELECTRICAL (GFCI USE, LOCK OUT AND TAG OUT); FALL HAZARDS; WATER USAGE AROUND ELECTRICAL SYSTEMS, AND OTHER CONSTRUCTION HAZARDS.
12. ALL POLYETHYLENE SHEETING AND MATERIALS USED FOR CONTAINMENT AND CRITICAL BARRIERS SHALL BE FIRE RETARDANT. ALL LUMBER USED SHALL BE FIRE RATED.
13. FOLLOWING COMPLETION OF ABATEMENT AND APPROVAL OF WORK BY THE OWNER, THE CONTRACTOR SHALL REMOVE AND DISPOSE OF ALL REMAINING POLYETHYLENE SHEETING AS ASBESTOS OR LEAD CONTAMINATED WASTE, AS APPLICABLE TO THE WORK.
14. ALL HAZARDOUS MATERIAL WORK SHALL BE CONDUCTED IN CONFORMANCE WITH SECTIONS 01 45 33, 02 82 13, AND 02 83 33 OF THE CONTRACT DOCUMENTS.
15. THE CONTRACTOR SHALL PROVIDE AT LEAST 48 HOUR ADVANCE NOTICE, PRIOR TO CANCELING ANY WORK SHIFT, AND SHALL BE RESPONSIBLE FOR ALL RESULTING CONSULTANT COSTS IF TIMELY NOTICES NOT RECEIVED. PROVIDE AT LEAST 48 HOURS ADVANCE NOTICE PRIOR TO STARTING OR RE-STARTING HAZARDOUS MATERIALS RELATED WORK OR ABATEMENT.

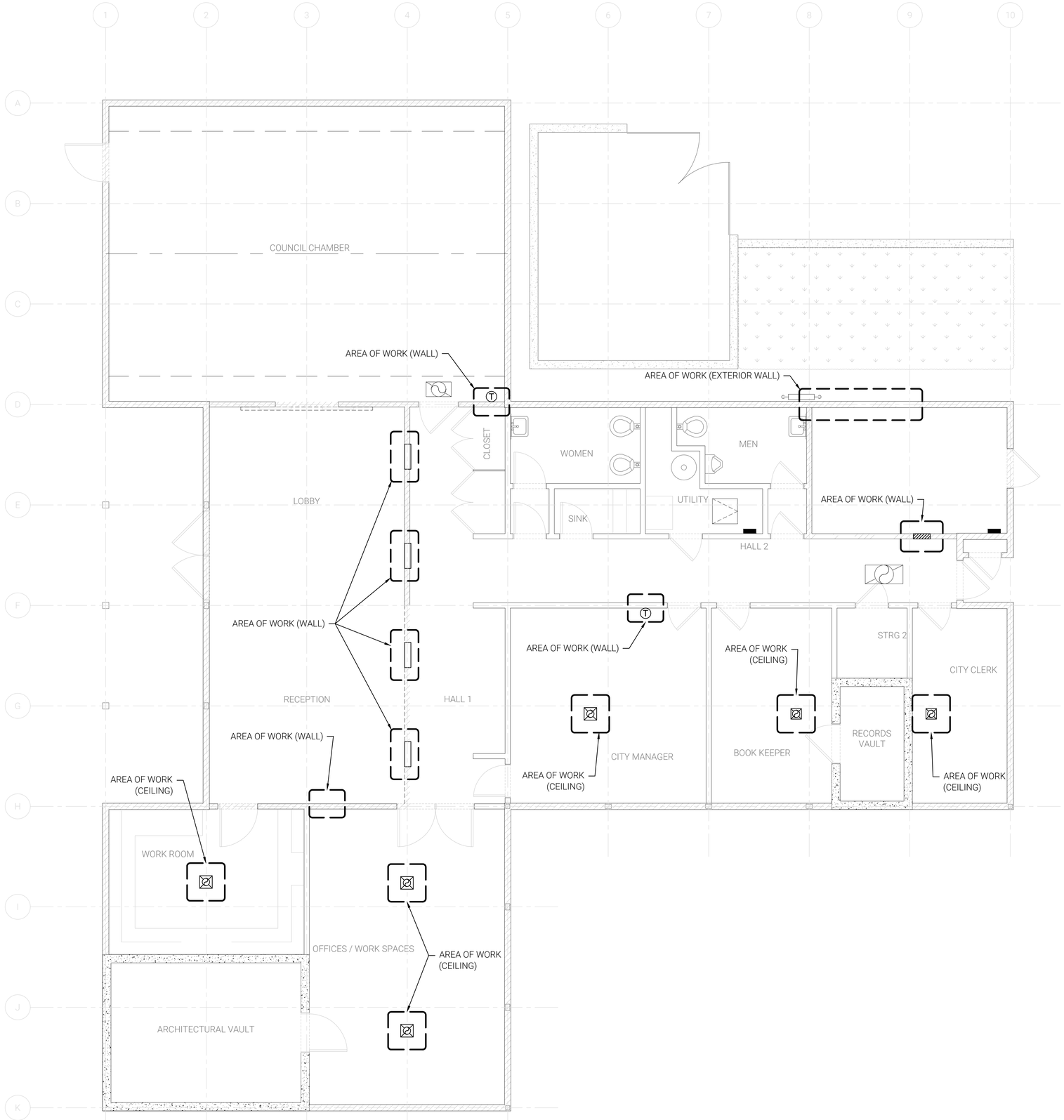

S&K CONSULTING SERVICES
2233 Via Fernandez
Palos Verdes Est, CA 90274
p. (310) 494-6910
w. www.skcsi.com

Client

City of Rolling Hills
2 Portuguese Bend Rd
Rolling Hills, CA 90274

Project

ROLLING HILLS CITY HALL HVAC REPAIR

Address

2 PORTUGUESE BEND RD
ROLLING HILLS, CA 90274

Stamp

LICENSED PROFESSIONAL ENGINEER
SAMUEL W. SIMONIAN
M 40818
MECHANICAL
STATE OF CALIFORNIA

Approvals

Project No:	092226
Permit App No:	-
Project Phase:	100% Design
Date:	12/28/2022
Drawn By:	EP
Checked By:	SS
Sheet Size:	24" x 36"

Revisions

No	Date	Description
1	12/28/22	HAZARDOUS MATERIAL ADD.

Sheet Title

HAZARDOUS MATERIAL NOTES

Sheet No.

T0.02

DATE: 12/28/2022 4:24 PM
FILE: C:\Users\EricPeterson\Desktop\SK\PROJECTS\2226 - CBH CITY HALL HVAC REPLACEMENT\CAD\T0 TITLE\T0.02 HAZARDOUS MATERIAL NOTES.DWG

GENERAL NOTES

1. ALL WORK SHALL COMPLY WITH THE 2019 EDITIONS OF THE CALIFORNIA BUILDING, MECHANICAL, PLUMBING, AND OTHER APPLICABLE FEDERAL, STATE, OR LOCAL CODES AS ADOPTED AND ENFORCED BY THE LOCAL JURISDICTION. IN CASE THE PLANS SHOW MORE STRINGENT REQUIREMENTS, THE PLANS SHALL GOVERN THE DESIGN, YET NOTHING ON THE DESIGN DOCUMENTS SHALL BE INTERPRETED AS AUTHORITY TO VIOLATE CODE(S) OR REGULATION(S).
2. SUBMISSION OF BID IN CONNECTION WITH THIS WORK SHALL IMPLY THAT THE BIDDER HAS EXAMINED THE JOB SITE UNDER WHICH THE CONTRACTOR WILL BE OBLIGATED TO OPERATE UNDER THIS CONTRACT. NO EXTRA CHARGE WILL BE ALLOWED FOR FAILURE OF ANY BIDDER TO EXAMINE THE SITE PRIOR TO BID.
3. WHERE USED, THE TERM "PROVIDE" SHALL MEAN "FURNISH AND INSTALL".
4. CONTRACTOR AND SUBCONTRACTORS SHALL VERIFY ALL DIMENSIONS AT THE JOB SITE PRIOR TO COMMENCEMENT OF ANY CONSTRUCTION. THE CONSULTANTS AND OWNER SHALL IMMEDIATELY BE NOTIFIED OF ANY DISCREPANCIES.
5. THE CONTRACTOR SHALL UNCONDITIONALLY GUARANTEE ALL WORK PERFORMED AND ALL EQUIPMENT AND MATERIALS FURNISHED FOR A PERIOD OF ONE YEAR FROM THE DATE OF FINAL ACCEPTANCE OF THE WORK BY THE CITY'S REPRESENTATIVE.
6. DIMENSIONS SHALL TAKE PRECEDENCE OVER SCALES SHOWN ON THE DRAWINGS. TYPICAL DETAILS AND GENERAL NOTES ARE MINIMUM REQUIREMENTS TO BE USED WHEN CONDITIONS ARE NOT SHOWN OTHERWISE.
7. NOTES AND DETAILS ON THE DRAWINGS SHALL TAKE PRECEDENCE OVER GENERAL NOTES AND TYPICAL DETAILS. WHERE NO DETAILS ARE SHOWN, CONSTRUCTION SHALL CONFORM TO SIMILAR ON PROJECT.
8. IN THE EVENT OF A CONFLICT OR INCONSISTENCY BETWEEN ITEMS INDICATED ON DESIGN PLANS WITH CODE REQUIREMENTS, THE MORE STRINGENT STANDARD SHALL PREVAIL.
9. CONTRACTOR SHALL FURNISH LABOR, MATERIALS, EQUIPMENT, AND TRANSPORTATION AS REQUIRED TO PROPERLY INSTALL ALL NEW HVAC SYSTEMS OR RELATED COMPONENTS AS INDICATED ON PLANS AND SPECIFIED HEREIN.
10. ALL NEW EQUIPMENT AND MATERIAL TO BE INSTALLED AS PART OF THE RENOVATION SHALL BEAR AN UNDERWRITERS LABORATORIES LABEL (UL), AND INSTALLED IN THE APPROVED MANNER FOR WHICH THEY ARE DESIGNED.
11. CONTRACTOR SHALL DOCUMENT AND RELAY ANY MAJOR DEVIATIONS FROM THE DESIGN DOCUMENTS, AND ATTAIN APPROVAL FROM THE E.O.R. BEFORE PROCEEDING. AS-BUILT COPIES SHALL BE PROVIDED INDICATING ALL CHANGES AND DEVIATIONS MADE DURING CONSTRUCTION. CONTRACTOR SHALL PROVIDE COMPLETED AS-BUILT DRAWINGS TO E.O.R. FOR RECORD AND PUBLISHING.
12. ALL WORK SHALL BE PERFORMED IN A CLEAN AND WORKMANLIKE MANNER. CARE SHALL BE EXERCISED TO MINIMIZE ANY INCONVENIENCE OR DISTURBANCE TO OTHER AREAS OF THE BUILDING WHICH ARE TO REMAIN IN OPERATION. ISOLATE WORK AREAS BY MEANS TO KEEP DUST AND DIRT WITHIN THE CONSTRUCTION AREA.
13. NO PIPING, EQUIPMENT, ETC. SHALL BE REMOVED, DISCONNECTED OR SHUT DOWN WITHOUT PRIOR REVIEW WITH THE CITY'S REPRESENTATIVE TO CONFIRM THAT AREAS TO REMAIN IN OPERATION WILL NOT BE AFFECTED. IF ANY AREAS NOT WITHIN THE SCOPE OF WORK SHALL BE AFFECTED BY ANY SHUTDOWN, REMOVAL OR DISCONNECTION, THE CITY NEEDS ADVANCE NOTICE PER APPROVAL SCHEDULE.
14. THE ARRANGEMENT OF EQUIPMENT, DUCTWORK, AND PIPING SHOWN ON THE DRAWINGS IS BASED UPON INFORMATION AVAILABLE TO THE ENGINEER AT THE TIME OF DESIGN AND IS NOT INTENDED TO SHOW EXACT DIMENSIONS PECULIAR TO A SPECIFIC MANUFACTURER. THE DRAWINGS ARE, IN PART, DIAGRAMMATIC AND SOME FEATURES OF THE ILLUSTRATED EQUIPMENT INSTALLATION MAY REQUIRE REVISION TO MEET ACTUAL EQUIPMENT INSTALLATION REQUIREMENTS. STRUCTURAL SUPPORTS, FOUNDATIONS, CONNECTED PIPING, VALVES, PIPE SUPPORTS AND ELECTRICAL CONDUIT SPECIFIED MAY HAVE TO BE ALTERED OR ADDITIONAL ITEMS REQUIRED TO ACCOMMODATE THE EQUIPMENT PROVIDED. NO ADDITIONAL PAYMENT WILL BE MADE FOR SUCH REVISIONS, ALTERATIONS AND ADDITIONS.
15. CONTRACTOR SHALL VERIFY ALL DIMENSIONS AT THE SITE MAKING FIELD MEASUREMENTS AND SHOP DRAWINGS NECESSARY FOR FABRICATION AND INSTALLATION OF HVAC SYSTEMS. MAKE ALLOWANCE FOR BEAMS, PIPES AND OTHER OBSTRUCTIONS IN BUILDING CONSTRUCTION. CHECK DRAWINGS SHOWING WORK OF OTHER TRADES AND CONSULT WITH THE STATE'S REPRESENTATIVE IN THE EVENT OF POTENTIAL INTERFERENCE. SHOP DRAWINGS SHALL BE MINIMUM 1/4"=1'-0" SCALE, INDICATING FITTINGS, SIZES, WELDS AND CONFIGURATIONS AND SUBMITTED TO ENGINEER FOR REVIEW.
16. CONTRACTOR SHALL COORDINATE HIS WORK WITH ALL OTHER TRADES PRIOR TO FABRICATION, PURCHASE AND/OR INSTALLATION OF HIS WORK.
17. BEFORE COMMENCEMENT OF WORK, CONTRACTOR SHALL VERIFY THE EXACT LOCATIONS, ELEVATIONS, AND CHARACTERISTICS OF ALL UTILITIES.
18. THE CONTRACTOR SHALL SECURE AND PAY ALL FEES AND PERMITS PERTAINING TO THE CONTRACT.
19. EXISTING MATERIALS THAT ARE REMOVED SHALL NOT BE REUSED IN NEW SYSTEMS, EXCEPT WHERE INDICATED AS BEING RELOCATED.
20. ALL EQUIPMENT SHALL BE INSTALLED IN STRICT COMPLIANCE WITH THE MANUFACTURER'S WRITTEN INSTALLATION INSTRUCTIONS.
21. GALVANIZED SHEET METAL SHALL BE PROVIDED FOR ALL HVAC DUCT SYSTEMS, AND CONSTRUCTED, SUPPORTED AND INSTALLED IN ACCORDANCE WITH THE 2019 CALIFORNIA MECHANICAL CODE AND THE LATEST SMACNA STANDARDS.
22. ALL PIPING SHALL BE INSTALLED IN A NEAT WORKMANSHIP-LIKE MANNER AND BE SUPPORTED AS REQUIRED BY CODES. PIPING SHALL BE SET UP AND DOWN AND OFFSET AS REQUIRED TO SUIT FIELD CONDITIONS. DIELECTRIC COUPLINGS SHALL BE USED WHERE DISSIMILAR METALS ARE JOINED.
23. CONTRACTOR SHALL PROVIDE ALL NECESSARY SUPPORTS FOR FIXTURES, DUCTWORK, PIPING, AND MECHANICAL EQUIPMENT, IN ORDER TO COMPLY WITH SEISMIC REQUIREMENTS AS OUTLINED BY THE LATEST EDITION(S) OF THE CALIFORNIA BUILDING CODE, SMACNA INSTALLATION STANDARDS, AND ALL RELATED LOCAL ORDINANCES.
24. ALL VALVES, UNIONS, ETC. TO BE LINE SIZE UNLESS OTHERWISE INDICATED ON DRAWINGS.
25. UNIONS SHALL BE PROVIDED AND INSTALLED AFTER EACH THREADED TYPE VALVE AND PRIOR TO EQUIPMENT CONNECTIONS.
26. ALL BRACING OF DUCTS AND PIPING SHALL BE
    A. INSTALLED IN ACCORDANCE WITH SMACNA GUIDELINES, OR AS DETAILED AND SPECIFIED HEREIN. SEE SEISMIC PROTECTION NOTE SHEET FOR MORE INFORMATION.
    B. WHERE BRACING DETAILS ARE NOT SHOWN ON THE DRAWINGS OR IN THE GUIDELINES, THE FIELD INSTALLATION SHALL BE SUBJECT TO THE APPROVAL OF THE STRUCTURAL ENGINEER
27. A COPY OF THE GUIDELINES PUBLISHED BY SMACNA SHALL BE PROVIDED BY THE CONTRACTOR AND KEPT ON THE JOB AT ALL TIMES.
28. CONTRACTOR SHALL NOT BORE, NOTCH, CUT, OR PENETRATE INTO A STRUCTURAL MEMBER WITHOUT WRITTEN APPROVAL FROM THE STRUCTURAL ENGINEER OF RECORD AND STATE'S REPRESENTATIVE.
29. ALL CONDUIT AND WIRE REQUIRED FOR THE DIRECT DIGITAL CONTROL SYSTEM SHALL BE PROVIDED AND INSTALLED BY THE CONTRACTOR. THE CONTROLS CONTRACTOR SHALL BE RESPONSIBLE TO PROVIDE ALL ELECTRICAL ITEMS REQUIRED FOR AN OPERATIONAL CONTROLS SYSTEM.
30. ALL DUCTWORK AND PIPING INSULATION SHALL MEET FIRE AND SMOKE HAZARD RATING AS TESTED UNDER PROCEDURE ASTM E-84, NFPA 255 AND UL 723 AND SHALL NOT EXCEED FLAME SPREAD RATING OF 25 AND MAXIMUM SMOKE DEVELOPED RATING OF 50.
31. MECHANICAL CONTRACTOR SHALL FIELD VERIFY ROUTING OF ALL DUCTWORK AND PIPING AND SUBMIT DETAILED, CLEARLY LEGIBLE, FULL SIZE (MINIMUM 30"x42") DUCT AND PIPING SHOP DRAWINGS IN AUTOCAD FORMAT FOR APPROVAL FROM THE ENGINEER PRIOR TO FABRICATION, CONSTRUCTION AND INSTALLATION OF DUCTWORK AND PIPING.
32. CONTRACTOR SHALL SUBMIT SHOP DRAWINGS OF COMPONENTS AT LEAST TWO WEEKS PRIOR TO INSTALLATION.
33. CITY'S REPRESENTATIVE SHALL INSPECT AND APPROVE OF ALL WORK BEFORE COVERING WITH INSULATION OR INSTALLATION WITHIN CEILING SPACE.
34. APPROVAL OR DISAPPROVAL BY THE INSPECTOR OF RECORD DOES MEAN APPROVAL OR FAILURE TO COMPLY WITH THE REQUIREMENTS OF THE PLANS AND SPECIFICATIONS. ANY DESIGN WHICH IS NOT CLEAR OR IS AMBIGUOUS SHALL BE REFERRED TO THE EOR AND OWNER FOR INTERPRETATION OR CLARIFICATION.
35. CONTRACTOR SHALL USE ALL NECESSARY APPROVED MEANS TO PROTECT HIS PORTION OF THE WORK BEFORE, DURING, AND AFTER INSTALLATION, UNTIL ACCEPTED, AND TO PROTECT THE INSTALLED WORK AND MATERIALS OF OTHER TRADES IN A LIKE MANNER. IN THE EVENT OF ANY DAMAGE, CONTRACTOR SHALL MAKE ALL REQUIRED REPAIRS AND REPLACEMENTS TO THE SATISFACTION OF THE EOR AND OWNER AND AT NO ADDITIONAL COST TO THE OWNER.
36. NEITHER THE E.O.R. OR OWNER SHALL BE RESPONSIBLE FOR THE CONSTRUCTION MEANS, METHODS, TECHNIQUES, SEQUENCES OR PROCEDURES, OR FOR THE SAFETY PRECAUTIONS AND PROGRAMS IN CONNECTION WITH THE WORK. ALL SUCH MATTERS ARE THE SOLE RESPONSIBILITY OF THE CONTRACTOR.
37. A MINIMUM OF 36" CLEAR WORKING SPACE, NOT LESS THAN 30" WIDE, SHALL BE MAINTAINED IN FRONT OF ALL SWITCHES, OVERCURRENT PROTECTION DEVICES, AND ELECTRICAL CONTROL COMPONENTS.
38. CONTRACTOR SHALL OBTAIN AND FOLLOW ALL REQUIREMENTS, GUIDELINES, RULES, AND PROCEDURES FOR CONSTRUCTION.
39. DEMOLITION OF ANY EXISTING AC UNITS, DUCTWORK, AND PIPING SHALL BE COORDINATED WITH FACILITIES AND OPERATIONS. CONTRACTOR SHALL SCHEDULE WORK TO MINIMIZE SHUT-DOWN OF EXISTING UNITS.
40. EXISTING SURFACES AND AREAS NOT INCLUDED IN THE WORK AREA SHALL BE PROTECTED FROM DAMAGE BY APPROVED MEANS. IF DAMAGE OCCURS, THE DAMAGE SHALL BE REPAIRED BY THE CONTRACTOR TO SATISFACTION OF THE E.O.R. AND OWNER AND AT NO ADDITIONAL COST TO THE OWNER.
41. REMOVE ALL SURPLUS MATERIALS, EQUIPMENT AND DEBRIS INCIDENTAL TO THIS PROJECT AND LEAVE THE PREMISES CLEAN AND ORDERLY UPON COMPLETION OF WORK.
42. UPON COMPLETION OF PIPING, BUT PRIOR TO APPLICATION OF INSULATION, THE CONTRACTOR SHALL TEST THE PIPING SYSTEMS FOR LEAKS. EQUIPMENT WHICH MAY BE DAMAGED BY THE SPECIFIED TEST CONDITIONS SHALL BE ISOLATED.
43. ON INSULATED PIPING: ALL VALVES HANDLES, AIR VENTS AND PRESSURE/ TEMPERATURE READOUT PORTS TO BE PROVIDED WITH 2" EXTENSION TO CLEAR PIPING INSULATION.
44. INDEPENDENT BALANCING AND TESTING CONTRACTOR SHALL PROVIDE WRITTEN AIR BALANCE REPORT FOR ALL HVAC EQUIPMENT INCLUDED IN THIS PROJECT.
45. ALL EXISTING DUCTING TO REMAIN SHALL BE CLEANED
46. PRIMARY CONTACT FOR EQUIPMENT SPECIFIED IS:

    RAMIRO RODRIGUEZ
    ENGINEERED SALES MANAGER, LENNOX COMMERCIAL
    PHONE: (951) 491-9195
    EMAIL: RAMIRO.RODRIGUEZ@LENNOXIND.COM

ABBREVIATIONS

AFF	ABOVE FINISHED FLOOR
BDD	BACKDRAFT DAMPER
CD	CEILING DIFFUSER
CFM	CUBIC FEET PER MINUTE
CFSD	COMBINATION FIRE/SMOKE DAMPER
CL	CENTER LINE
CV	CONTROL VALVE
(D)	DEMO
DEMO	DEMOLISH/DISCONNECT & REMOVE
(E)	EXISTING
EA	EXHAUST AIR
EAT	ENTERING AIR TEMPERATURE
EOR	ENGINEER OF RECORD
ESP	EXTERNAL STATIC PRESSURE
EWT	ENTERING WATER TEMP.
°F	FAHRENHEIT
FC	FAN COIL UNIT
FLA	FULL LOAD AMPS
FPM	FEET PER MINUTE
FS	FIRE SPRINKLER
FT	FEET
GPM	GALLONS PER MINUTE
HHWS	HEATING HOT WATER SUPPLY
HHWR	HEATING HOT WATER RETURN
HTS	HIGH TEMP. WATER SUPPLY
HTR	HIGH TEMP. WATER RETURN
HOA	HAND/OFF/AUTO SWITCH
HP	HORSEPOWER
HR	HOUR
IN	INCHES
IN. W.C.	INCHES OF WATER COLUMN
KW	KILOWATT
L	LENGTH
(L)	LINER
LAT	LEAVING AIR TEMPERATURE
LBS	POUNDS
LWT	LEAVING WATER TEMP.
MAX	MAXIMUM
MFG	MANUFACTURER
MIN	MINIMUM
MUA	MAKEUP AIR
(N)	NEW
NG	NATURAL GAS
OSA	OUTSIDE AIR
dP	DIFFERENTIAL PRESSURE
PH	PHASE
QTY	QUANTITY
RA	RETURN AIR
RF	RETURN FAN
RG	RETURN GRILLE
RH	RELATIVE HUMIDITY
SA	SUPPLY AIR
SD	SMOKE DETECTOR
SF	SUPPLY FAN
SR	SUPPLY REGISTER
SQFT.	SQUARE FEET
TI	TEMPERATURE INDICATOR
TT	TEMPERATURE TRANSDUCER
TSTAT	THERMOSTAT
TYP	TYPICAL
TSP	TOTAL STATIC PRESSURE
V	VOLTS
VAV	VARIABLE AIR VOLUME
VEL	VELOCITY
VFD	VARIABLE FREQUENCY DRIVE
VIF	VERIFY IN FIELD
VP	VELOCITY PRESSURE
WG	WATER GAUGE
WT	WEIGHT

SYMBOLS

SYMB. DOUBLE LINE	SYMB. SINGLE LINE	ABBR.	DESCRIPTION
	SAME	POC	POINT OF CONNECTION
	SAME	POD	POINT OF DISCONNECTION
HVAC			
12 Ø	12 Ø	-	ROUND DUCT WITH SIZE (DIAMETER)
12X8	12X8	-	RECT DUCT WITH SIZE (W X H)
D	DROP	-	DUCT DROP IN DIRECTION OF AIR FLOW
RISE	R	-	DUCT RISE IN DIRECTION OF AIR FLOW
SLOPE	SLOPE	-	DIRECTION OF SLOPE
		-	ACOUSTICALLY LINED DUCT
		-	SUPPLY DUCT RISER
		-	RETURN DUCT RISER
		-	EXHAUST DUCT RISER
		-	SUPPLY DUCT DROP
		-	RETURN DUCT DROP
		-	EXHAUST DUCT DROP
		FD	FIRE DAMPER
		SM	SMOKE DETECTOR
		FSD	COMBINATION FIRE/SMOKE DAMPER
		AFD	AUTOMATIC FIRE DAMPER
		VD	MANUAL VOLUME DAMPER
		MVD	MOTORIZED VOLUME DAMPER
		OBD	OPPOSED BLADE DAMPER
		PBD	PARALLEL BLADE DAMPER
		SB	SECURITY BARS IN DUCT
		FC	FLEXIBLE DUCT CONNECTOR
-		-	EXPANSION JOINT
		TV	TURNING VANES
		-	AIR EXTRACTOR
	-	-	SPLITTER
		-	TRANSITION FROM RECT. TO ROUND
AD	AD	AD	ACCESS DOOR (SIDE OF DUCT)
AD	AD (BTM)	AD	ACCESS DOOR (BOTTOM OF DUCT)
CAP	CAP	-	CAPPED END
		-	ROUND DIFFUSER/REGISTER/GRILLE
		SD	SQUARE SUPPLY DIFFUSER
		RR	SQUARE RETURN REGISTER
		ER	SQUARE EXHAUST REGISTER
	SAME	-	SD W/AIR FLOW INDICATORS
	SAME	-	RR W/AIR FLOW INDICATOR
		-	FLEX CONNECTION TO DIFF./REG.
		-	WALL REG. W/AIR FLOW INDICATORS
	SAME	-	WALL GRILLE W/AIR FLOW INDICATORS
	SAME	TAO	TRANSFER AIR OPENING
HS	SAME	-	HUMIDITY SENSOR
TS	SAME	-	THERMOSTAT SENSOR
T	SAME	-	THERMOSTAT
SD	SAME	-	DUCT SMOKE DETECTOR

S&K CONSULTING SERVICES
2233 Via Fernandez
Palos Verdes Est, CA 90274
p. (310) 494-6910
w. www.skcsi.com

Client

City of Rolling Hills
2 Portuguese Bend Rd
Rolling Hills, CA 90274

Project

ROLLING HILLS CITY HALL HVAC REPAIR

Address

2 PORTUGUESE BEND RD
ROLLING HILLS, CA 90274

Stamp

LICENSED PROFESSIONAL ENGINEER
SAMUEL W. SMOLKER
M-30818
MECHANICAL
STATE OF CALIFORNIA

Approvals

Project No:	092226
Permit App No:	-
Project Phase:	100% Design
Date:	12/28/2022
Drawn By:	EP
Checked By:	SS
Sheet Size:	24" x 36"

Revisions

No	Date	Description

Sheet Title

MECHANICAL GENERAL NOTES

Sheet No.

M0.01

DATE: 12/28/2022 4:34 PM
FILE: C:\Users\Samuel\Desktop - S&K\PROJECTS\2226 - CRH CITY HALL HVAC REPLACEMENT\LAYOUTS MECHANICAL\M0.0 MECHANICAL GENERAL NOTES.DWG

NATURAL GAS FURNACE SCHEDULE

ID	ZONE SERVED	MFG/MODEL	TYPE	INPUT (BTUH)		OUTPUT (BTUH)		AFUE	TEMP RISE (°F)		HIGH STATIC (IN. WG.)		VENT PIPE (IN)		GAS CONN. (IPS)	BLOWER			ELECTRICAL					DIMENSION, LxWxH (IN)	FILTER[3]		WEIGHT (LBS)	REMARKS
				HIGH	LOW	HIGH	LOW		HIGH	LOW	HEATING	COOLING	INTAKE	EXHAUST		HP	CFM	ADJ. CFM[4]	VOLT	PH	HZ	FLA	MOP		SIZE	EFF.		
FU 1	ZONE 1 OFFICES	LENNOX SL297UH080NV48C	UPFLOW, 2-STAGE HEAT, VARIABLE SPEED BLOWER, ULTRA-LOW NOX	80,000	52,000	78,000	51,000	97.50%	45-75	30-60	0.8	1	2	2	1/2	3/4	620-1730	H: 1,007 C: 623	120	1	60	10.1	15	29.25 x 21 x 33	20 X 25 X 2	MERV 13	154	1, 2, 3, 4, 5
FU 2	ZONE 2 LOBBY/ RECPTION																	H: 1,173 C: 1,186										1, 2, 3, 4, 5
FU 3	ZONE 3 COUNCIL CHAMBERS																	H: 1,173 C: 1,186										1, 2, 3, 4, 5

1. PROVIDE WITH RETURN AIR BASE CAN SIZED FOR ECONOMIZER CONNECTION.
2. PROVIDE WITH MFG AIR FILTER RACK KIT OR PROVIDE FILTER RACK IN FURNACE RETURN AIR BASE CAN.
3. AIR FILTERS MUST HAVE A MAXIMUM INITIAL RESISTANCE 0.25 IN WC @ 350 FPM.
4. ADJUST FURNACE BLOWER SPEED DIP SWITCH SETTINGS TO ACHIEVE THE ADJUSTED SECOND STAGE HEATING CFM FOR THE GIVEN ZONE. ZONE 1 FURNACE NOT TO BE CONNECTED FOR 2ND STAGE BLOWER SPEEDS.
5. PROVIDE WITH MANUFACTURER SUPPLIED COMBINATION VENT TERMINATION KIT

OUTDOOR AIR-COOLED CONDENSER SCHEDULE

ID	ZONE SERVED	MFG/MODEL	NOM. TONN.	SEER	EER	LINE OD (IN)		REFRIGERANT		NO. OF COMP.	NO. OF CIRCUIT	ELECTRICAL					DIMENSION, LxWxH (IN)	WEIGHT (LBS)	REMARKS
						LIQUID	SUCTION	TYPE	CHARGE			VOLT	PH	HZ	MOP	MCA			
AC 1	ZONE 1 OFFICES	LENNOX ML14XC1-048-233	4	14.5	12.5	3/8	7/8	R-410A	9LB 8OZ	1	1	208/230	3	60	20	18.9	28.25 x 28.25 x 39.25	218	1
AC 2	ZONE 2 LOBBY/ RECPTION																		1
AC 3	ZONE 3 COUNCIL CHAMBERS																		1

1. OUTDOOR UNIT MUST BE COMPATIBLE AND FROM THE SAME MANUFACTURER AS THE INDOOR COOLING COIL.

INDOOR COOLING COIL SCHEDULE

ID	ZONE SERVED	MFG/MODEL	NOM. TONNAGE	TYPE	LINE CONN. (IN)			DIMENSION, LxWxH (IN)	WEIGHT (LBS)	REMARKS
					SUCTION OD	LIQUID OD	COND. DRAIN			
CC 1	ZONE 1 OFFICES	LENNOX CX35-60C-6F	5	CASED	7/8	3/8	2 x 3/4	22 x 21 x 32.25	55	1
CC 2	ZONE 2 LOBBY/ RECPTION									1
CC 3	ZONE 3 COUNCIL CHAMBERS									1

1. INDOOR UNIT MUST BE COMPATIBLE AND FROM THE SAME MANUFACTURER AS THE OUTDOOR CONDENSING UNIT AND FURNACE.

THERMOSTAT SCHEDULE

ID	ZONE SERVED	MFG/MODEL	REQUIRED FEATURES
T 1	ZONE 1 OFFICES	HONEYWELL VISIONPRO 8000 SMART THERMOSTAT	7-DAY PROGRAMMABLE, MULTI-STAGE, 2-STAGE HEATING/COOLING CONTROL, AUTO CHANGEOVER, MINIMUM VENTILATION PROGRAMMING, COMPLIANT WITH CA TITLE 24 ENERGY CODE
T 2	ZONE 2 LOBBY/ RECPTION		
T 3	ZONE 3 COUNCIL CHAMBERS		

ECONOMIZER SCHEDULE

ID	ZONE SERVED	MFG/MODEL	APPROVALS	MIN OA (CFM)	REMARKS
EC 1	ZONE 1 OFFICES	LENNOX C2ECON23K	CA TITLE 24 ASHRAE 90.1	205	1
EC 2	ZONE 2 LOBBY/ RECPTION			245	1
EC 3	ZONE 3 COUNCIL CHAMBERS			350	1

1. PROVIDE WITH MFG SUPPLIED RETURN AIR SENSOR. PROGRAM FOR DIFFERENTIAL TEMPERATURE OPERATION.

REGISTER/DAMPER SCHEDULE

ID	MFG/MODEL	TYPE	SIZE	NC	FINISH	REMARKS
R/D 1	HART COOLEY REG: #8140B DAMP: 9200V	4-WAY STEEL REGISTER W/ OPPOSED BLADE DAMPER	10 X10	30	BAKED ENAMEL, WHITE	1
R/D 2			12 X 12			1
R/D 3		1-WAY STEEL REGISTER W/ OPPOSED BLADE DAMPER	6 X 24			1

1. ANY CHANGE TO FINISH OF REGISTER MUST BE APPROVED BY EOR.

S&K CONSULTING SERVICES
2233 Via Fernandez
Palos Verdes Est, CA 90274
p. (310) 494-6910
w. www.skcsi.com

Client
City of Rolling Hills
2 Portuguese Bend Rd
Rolling Hills, CA 90274

Project
ROLLING HILLS CITY HALL HVAC REPAIR

Address
2 PORTUGUESE BEND RD
ROLLING HILLS, CA 90274

Stamp
LICENSED PROFESSIONAL ENGINEER SAMUEL W. SMOLEN M-30818 MECHANICAL STATE OF CALIFORNIA

Approvals

Project No: 092226
Permit App No: -
Project Phase: 100% Design
Date: 12/28/2022
Drawn By: EP
Checked By: SS
Sheet Size: 24" x 36"

Revisions

No	Date	Description

Sheet Title
MECHANICAL SCHEDULES

Sheet No.
M0.02

DATE: 12/28/2022 4:54 PM
FILE: C:\Users\EricPeng\Documents - S&K\PROJECTS\2226 - CRH CITY HALL HVAC REPLACEMENT\LEAD\05 MECHANICAL\M0.02 MECHANICAL SCHEDULES.DWG

Space Conditioning Mandatory Measures:

110.2 CERTIFICATION BY MANUFACTURERS
ANY SPACE CONDITIONING EQUIPMENT LISTED IN §110.2 SHALL ONLY BE INSTALLED IF CERTIFIED TO THE ENERGY COMMISSION TO MEET ALL APPLICABLE §110.2 REQUIREMENTS.

110.5 PILOT LIGHTS PROHIBITED FOR NATURAL GAS EQUIPMENT
PILOT LIGHTS ARE PROHIBITED ON NATURAL GAS FAN-TYPE CENTRAL FURNACES, POOL HEATERS, SPA HEATERS, AND FIREPLACES.

110.8(a) INSULATION CERTIFICATION
INSTALLED INSULATION SHALL BE CERTIFIED BY THE DEPARTMENT OF CONSUMER AFFAIRS PER TITLE 24, PART 12, CHAPTERS 12-13, ARTICLE 3 "STANDARDS FOR INSULATING MATERIAL."

110.8(b) UREA FORMALDEHYDE INSULATION
UREA FORMALDEHYDE INSULATION SHALL NOT BE INSTALLED UNLESS IN EXTERIOR SIDE WALLS WITH A FOUR-MIL-THICK PLASTIC POLYETHYLENE VAPOR RETARDER OR EQUIVALENT PLASTIC SHEATHING VAPOR RETARDER INSTALLED BETWEEN THE UREA FORMALDEHYDE FOAM INSULATION AND THE INTERIOR SPACE.

110.8(c) INSULATING MATERIAL
ALL INSULATING MATERIALS SHALL BE INSTALLED IN COMPLIANCE WITH THE FLAME SPREAD RATING AND SMOKE DENSITY REQUIREMENTS OF THE CALIFORNIA BUILDING CODE.

110.8(d) DUCTS
IF INSULATION IS INSTALLED ON AN EXISTING SPACE-CONDITIONING DUCT, IT SHALL COMPLY WITH SECTION 604.0 OF THE CMC.

120.1(d)3 REQUIRED DEMAND CONTROL VENTILATION
DCV CONTROLS ARE REQUIRED FOR A SPACE WITH A DESIGN OCCUPANCY DENSITY >= 25 PEOPLE/1,000 FT2 IF THE SYSTEM SERVING THE SPACE HAS ONE OR MORE OF THE FOLLOWING
- AN AIR ECONOMIZER
- MODULATING OUTSIDE AIR CONTROL
- DESIGN OUTDOOR AIRFLOW RATE > 3,000 CFM

120.1(f) DESIGN AND CONTROL REQUIREMENTS FOR QUANTITIES OF OUTDOOR AIR

120.1(f)2 ALL VAV SYSTEMS SHALL INCLUDE DYNAMIC CONTROLS THAT MAINTAIN OA VENTILATION RATES WITHIN 10% OF THE REQUIRED OA VENTILATION RATE AT BOTH FULL AND REDUCED SUPPLY AIRFLOW CONDITIONS. FIXED MINIMUM DAMPER POSITION IS NOT AN ALLOWED STRATEGY.

120.2(a) THERMOSTAT CONTROLS
HEATING AND COOLING SUPPLY TO EACH SPACE-CONDITIONING ZONE OR DWELLING UNIT SHALL BE CONTROLLED BY AN INDIVIDUAL THERMOSTATIC CONTROL THAT RESPONDS TO TEMPERATURE IN THE ZONE AND MEETS 120.2(b) REQUIREMENTS.

120.2(b) ZONAL THERMOSTAT CONTROLS

120.2(b)1 BEING SET TO 55 °F OR LOWER, WHEN CONTROLLING HEATING
120.2(b)2 BEING SET UP TO 85 °F OR HIGHER, WHEN CONTROLLING COOLING
120.2(b)3 PROVIDING A TEMPERATURE RANGE, OR DEAD BAND OF AT LEAST 5 °F WITHIN WHICH HEATING AND COOLING TO THE ZONE IS SHUT OFF OR REDUCED TO A MINIMUM.

120.2(b)4 THERMOSTATIC CONTROLS FOR ALL SINGLE ZONE AIR CONDITIONERS AND HEAT PUMPS SHALL COMPLY WITH THE REQUIREMENTS OF 110.2(c) AND 110.12(a) AND, IF EQUIPPED WITH DDC TO THE ZONE LEVEL WITH THE AUTOMATIC DEMAND SHED CONTROLS OF 110.12(b).

Space Conditioning Mandatory Measures:

120.2(e)1 AUTOMATIC SHUT-OFF FOR SPACE-CONDITIONING SYSTEMS
EACH SPACE-CONDITIONING SYSTEM SHALL BE INSTALLED WITH ONE OF THE FOLLOWING CONTROLS CAPABLE OF AUTOMATICALLY SHUTTING OFF THE SYSTEM DURING PERIODS OF NONUSE:
- AUTOMATIC TIME SWITCH CONTROL PER 110.9, WITH ACCESSIBLE MANUAL OVERRIDE ALLOWING SYSTEM OPERATION FOR UP TO 4 HOURS, OR
- AN OCCUPANCY SENSOR, OR
- A 4-HOUR TIMER THAT CAN BE MANUALLY OPERATED.

120.2(e)2 AUTOMATIC RESTART FOR SPACE-CONDITIONING SYSTEMS
EACH SPACE-CONDITIONING SYSTEM SHALL BE INSTALLED WITH CONTROLS THAT SHALL AUTOMATICALLY RESTART AND TEMPORARILY OPERATE THE SYSTEM AS REQUIRED TO MAINTAIN:
- 120.2(e)2A A SETBACK HEATING THERMOSTAT SETPOINT IF THE SYSTEM PROVIDES MECHANICAL HEATING, AND
- 120.2(e)2B A SETUP COOLING THERMOSTAT SETPOINT IF THE SYSTEM PROVIDES MECHANICAL COOLING.

120.2(f) DAMPERS FOR AIR SUPPLY AND EXHAUST EQUIPMENT
OUTDOOR AIR SUPPLY AND EXHAUST EQUIPMENT SHALL BE INSTALLED WITH DAMPERS THAT AUTOMATICALLY CLOSE UPON FAN SHUTDOWN.

120.2(g) ISOLATION AREA DEVICES
EACH SPACE-CONDITIONING SYSTEM SERVING MULTIPLE ZONES WITH A COMBINED CONDITIONED FLOOR AREA OF MORE THAN 25,000 FT2 SHALL BE DESIGNED, INSTALLED AND CONTROLLED TO SERVE ISOLATION AREAS.
- EACH ZONE, OR COMBINATION OF ZONES <25,000 FT2, SHALL BE A SEPARATE ISOLATION AREA.
- EACH ISOLATION AREA SHALL BE PROVIDED WITH ISOLATION DEVICES, SUCH AS VALVES OR DAMPERS THAT ALLOW THE SUPPLY OF HEATING OR COOLING TO BE REDUCED OR SHUT-OFF INDEPENDENTLY OF OTHER ISOLATION AREAS.
- EACH ISOLATION AREA SHALL BE CONTROLLED BY A DEVICE MEETING THE REQUIREMENTS OF 120.2(e)1.

Space Conditioning Mandatory Measures:

120.2(h) AUTOMATIC DEMAND SHED CONTROLS
SHALL MEET REQUIREMENTS IN 110.12
110.12(a) DEMAND RESPONSIVE (DR) CONTROL REQUIREMENTS:
1. EITHER CERTIFIED OPENADR 2.0a, OPENADR 2.0b VIRTUAL END NODE (VEN); OR CERTIFIED BY THE MANUFACTURER AS BEING CAPABLE OF RESPONDING TO A DR SIGNAL FROM A CERTIFIED OPENADR 2.0b VIRTUAL END NODE BY AUTOMATICALLY IMPLEMENTING THE CONTROL FUNCTIONS REQUESTED BY THE VIRTUAL END NODE FOR THE EQUIPMENT IT CONTROLS.
2. CAPABLE OF COMMUNICATING USING WI-FI, ZIGBEE, BACNET, ETHERNET, AND/OR HARD-WIRING.
3. MAY INCORPORATE AND USE ADDITIONAL PROTOCOLS BEYOND THOSE SPECIFIED IN 110.12(a)1 AND 2.
4. SHALL CONTINUE TO PERFORM ALL OTHER CONTROL FUNCTIONS PROVIDED BY THE CONTROL WHEN COMMUNICATIONS ARE DISABLED.
5. THERMOSTATS SHALL COMPLY WITH REFERENCE JOINT APPENDIX 5 (JA5)

110.12(b) NONRESIDENTIAL HVAC SYSTEMS WITH DDC TO THE ZONE LEVEL SHALL BE PROGRAMMED TO ALLOW CENTRALIZED DEMAND SHED FOR NON-CRITICAL ZONES. CONTROLS SHALL BE CAPABLE OF:
1. REMOTELY INCREASING THE OPERATING COOLING TEMPERATURE SETPOINTS BY 4 DEGREES OR MORE IN ALL NON-CRITICAL ZONES ON SIGNAL FROM A CENTRALIZED CONTACT OR SOFTWARE POINT WITHIN AN EMCS
2. REMOTELY DECREASING THE OPERATING HEATING TEMPERATURE SETPOINTS BY 4 DEGREES OR MORE IN ALL NON-CRITICAL ZONES ON SIGNAL FROM A CENTRALIZED CONTACT OR SOFTWARE POINT WITHIN AN EMCS
3. REMOTELY RESETTING THE TEMPERATURES IN ALL NON-CRITICAL ZONES TO ORIGINAL OPERATING LEVELS ON SIGNAL FROM A CENTRALIZED CONTACT OR SOFTWARE POINT WITHIN AN EMCS
4. PROVIDING AN ADJUSTABLE RATE OF CHANGE FOR THE TEMPERATURE INCREASE, DECREASE, AND RESET
5. THE FOLLOWING FEATURES:
   A. DISABLED BY AUTHORIZED FACILITY OPERATORS
   B. MANUAL CONTROL BY AUTHORIZED FACILITY OPERATORS
   C. UPON RECEIPT OF A DR SIGNAL, SPACE-CONDITIONING SYSTEMS SHALL CONDUCT A CENTRALIZED DEMAND SHED, AS SPECIFIED IN 110.12(b)1 AND 110.12(b)2, FOR NON-CRITICAL ZONES DURING THE DR PERIOD

Space Conditioning Mandatory Measures:

120.2(i) ECONOMIZER FAULT DETECTION AND DIAGNOSTICS (FDD)
ALL NEWLY INSTALLED AIR-COOLED PACKAGED DIRECT-EXPANSION UNITS, WITH AN AIR HANDLER MECHANICAL COOLING CAPACITY GREATER THAN 54,000 BTU/HR AND AN INSTALLED AIR ECONOMIZER SHALL INCLUDE A STAND-ALONE OR INTEGRATED FDD SYSTEM IN ACCORDANCE WITH THE FOLLOWING:
1. TEMPERATURE SENSORS SHALL BE PERMANENTLY INSTALLED TO MONITOR SYSTEM OPERATION: OUTSIDE AIR, SUPPLY AIR, AND WHEN REQUIRED FOR DIFFERENTIAL ECONOMIZER OPERATION, A RETURN AIR SENSOR.
2. TEMPERATURE SENSORS SHALL HAVE AN ACCURACY OF +/- 2 °F OVER THE RANGE OF 40 °F TO 80 °F.
3. CONTROLLER SHALL HAVE THE CAPABILITY OF DISPLAYING THE VALUE OF EACH SENSOR AND
4. PROVIDE SYSTEM STATUS BY INDICATING: FREE COOLING AVAILABLE, ECONOMIZER ENABLED, COMPRESSOR ENABLED, HEATING ENABLED (IF AVAILABLE), MIXED AIR LOW LIMIT CYCLE ACTIVE.
5. CONTROLLER SHALL ALLOW MANUAL INITIATION OF EACH OPERATING MODE SO THAT THE OPERATION OF COOLING SYSTEMS, ECONOMIZERS, FANS, AND HEATING SYSTEMS CAN BE INDEPENDENTLY TESTED AND VERIFIED.
6. FAULTS SHALL BE REPORTED IN ONE OF THE FOLLOWING WAYS:
   - REPORTED TO AN EMCS REGULARLY MONITORED BY FACILITY STAFF.
   - ANNUNCIATED LOCALLY ON ONE OR MORE ZONE THERMOSTATS, OR A DEVICE WITHIN 5 FT OF ZONE THERMOSTAT(S), CLEARLY VISIBLE, AT EYE LEVEL, AND WITH INSTRUCTIONS TO CONTACT APPROPRIATE BUILDING STAFF OR AN HVAC TECHNICIAN. IN BUILDINGS WITH MULTIPLE TENANTS, ANNUNCIATION SHALL EITHER BE WITHIN PROPERTY MANAGEMENT OFFICES OR IN A COMMON SPACE ACCESSIBLE BY THE PROPERTY OR BUILDING MANAGER
   - REPORTED TO A FAULT MANAGEMENT APPLICATION WHICH AUTOMATICALLY PROVIDES NOTIFICATION OF THE FAULT TO REMOTE HVAC SERVICE PROVIDER.
7. THE FDD SHALL DETECT: AIR TEMPERATURE SENSOR FAILURE/FAULT, FAILURE TO ECONOMIZE, ECONOMIZING WHEN NOT ADVISED, DAMPER NOT MODULATING, AND EXCESSIVE OUTDOOR AIR.
8. THE FDD SYSTEM SHALL BE CERTIFIED BY THE ENERGY COMMISSION AS MEETING REQUIREMENTS OF 120.2(i)1 THROUGH 120.2(i)7 IN ACCORDANCE WITH 110.0 AND JOINT APPENDIX JA6.3

120.2(j) DIRECT DIGITAL CONTROLS (DDC)
DDC TO THE ZONE SHALL BE PROVIDED AS SPECIFIED BY TABLE 120.2-A. THE DDC SYSTEM SHALL MEET CONTROL LOGIC REQUIREMENTS OF 120.1(c) AND 120.2(h) AND BE CAPABLE OF ALL OF THE FOLLOWING:
1. MONITORING ZONE AND SYSTEM DEMAND FOR FAN PRESSURE, PUMP PRESSURE, HEATING AND COOLING
2. TRANSFERRING ZONE AND SYSTEM DEMAND INFORMATION FROM ZONES TO AIR DISTRIBUTION SYSTEM CONTROLLERS AND FROM AIR DISTRIBUTION SYSTEMS TO HEATING AND COOLING PLANT CONTROLLERS
3. AUTOMATICALLY DETECTING THE ZONES AND SYSTEMS THAT MAY BE EXCESSIVELY DRIVING THE RESET LOGIC AND GENERATE AN ALARM OR OTHER INDICATION TO THE SYSTEM OPERATOR
4. READILY ALLOW OPERATOR REMOVAL OF ZONE(S) FROM THE RESET ALGORITHM
5. FOR NEW BUILDINGS, TRENDING AND GRAPHICALLY DISPLAYING INPUT AND OUTPUT POINTS
6. RESETTING HEATING AND COOLING SETPOINTS IN ALL NON-CRITICAL ZONES UPON RECEIPT OF A SIGNAL FROM A CENTRALIZED CONTACT OR SOFTWARE POINT AS DESCRIBED IN 120.2(h).

Space Conditioning Mandatory Measures:

120.2(k) OPTIMUM START/STOP CONTROLS
SPACE-CONDITIONING SYSTEMS WITH DDC TO THE ZONE SHALL HAVE OPTIMUM START/STOP CONTROLS. CONTROL ALGORITHM SHALL, AS A MINIMUM, BE A FUNCTION OF THE DIFFERENCE BETWEEN SPACE TEMPERATURE AND OCCUPIED SETPOINT, OUTDOOR AIR TEMP, AND AMOUNT OF TIME PRIOR TO SCHEDULED OCCUPANCY.

MASS RADIANT FLOOR SLAB SYSTEMS SHALL INCORPORATE FLOOR TEMPERATURE ONTO THE OPTIMUM START ALGORITHM.

120.4 AIR DISTRIBUTION SYSTEM DUCTS AND PLENUMS
PORTIONS OF SUPPLY- AND RETURN-AIR DUCTS CONVEYING HEATED OR COOLED AIR LOCATED IN ONE OR MORE OF THE FOLLOWING SPACES SHALL BE INSULATED TO A MINIMUM INSTALLED LEVEL OF R-8:
- OUTDOORS
- IN A SPACE BETWEEN THE ROOF AND AN INSULATING CEILING
- IN A SPACE DIRECTLY UNDER A ROOF WITH FIXED VENTS OR OPENINGS TO THE OUTSIDE OR UNCONDITIONED SPACES
- UNCONDITIONED SPACES, SUCH AS UNCONDITIONED CRAWLSPACE

PORTIONS OF SUPPLY-AIR DUCTS THAT ARE NOT IN ONE OF THESE SPACES, INCLUDING DUCTS BURIED IN CONCRETE SLAB, SHALL BE INSULATED TO A MINIMUM INSTALLED LEVEL OF R-4.2 (OR ANY HIGHER LEVEL REQUIRED BY CMC 605.0), OR BE ENCLOSED IN DIRECTLY CONDITIONED SPACE.

Space Conditioning Mandatory Measures:

120.4(b) DUCT AND PLENUM MATERIALS
120.4(b) FACTORY-FABRICATED DUCT SYSTEMS MUST:
- COMPLY WITH UL 181 FOR DUCTS AND CLOSURE SYSTEMS AND BE LABELED AS COMPLYING WITH UL 181
- ALL PRESSURE SENSITIVE TAPES, HEAT ACTIVATED TAPES, AND MASTICS USED IN MANUFACTURE OF RIGID FIBERGLASS DUCTS SHALL COMPLY WITH UL 181 AND UL 181A
- ALL PRESSURE SENSITIVE TAPES, AND MASTICS USED IN MANUFACTURE OF FLEXIBLE DUCTS SHALL COMPLY WITH UL 181 AND L 181B
- JOINTS AND SEAMS SHALL NOT BE SEALED WITH CLOTH BACK RUBBER ADHESIVE DUCT TAPES UNLESS COMBINED WITH MASTICS AND DRAWBANDS.

FIELD-FABRICATED DUCT SYSTEMS:
- FACTORY-MADE RIGID FIBERGLASS AND FLEXIBLE DUCTS FOR FIELD-FABRICATED DUCT SYSTEMS SHALL COMPLY WITH UL 181. ALL CLOSURE SYSTEMS, INCLUDING PRESSURE SENSITIVE TAPES, MASTICS, AND AEROSOL SEALANTS, SHALL MEET THE APPLICABLE REQUIREMENTS OF UL 181, UL 181A AND UL 181B.
- MASTIC SEALANTS SHALL:
  - COMPLY WITH APPLICABLE REQUIREMENTS OF UL 181, UL 181A, AND UL 181B AND BE NONTOXIC AND WATER RESISTANT.
  - PASS ASTM C731 AND D2202, IF USED IN BUILDING INTERIOR,
  - PASS ASTM C731, C732, AND D2202, IF USED ON EXTERIOR.
  - SEALANTS AND MESHES SHALL BE RATED FOR EXTERIOR USE.
- PRESSURE SENSITIVE TAPES SHALL COMPLY WITH APPLICABLE REQUIREMENTS IN UL 181, UL 181A, AND UL 181B.
- JOINTS AND SEAMS SHALL NOT BE SEALED WITH CLOTH BACK RUBBER ADHESIVE DUCT TAPES UNLESS COMBINED WITH MASTICS AND DRAWBANDS.
- DRAWBANDS USED WITH FLEXIBLE DUCTS SHALL:
  - BE EITHER STAINLESS STEEL WORM-DRIVE HOSE CLAMPS OR UV-RESISTANT NYLON DUCT TIES
  - HAVE A MINIMUM TENSILE STRENGTH RATING OF 150 LBS.
  - BE TIGHTENED AS RECOMMENDED BY THE MANUFACTURER
- AEROSOL SEALANT CLOSURES SHALL:
  - MEET REQUIREMENTS OF UL 723 AND BE APPLIED ACCORDING TO MANUFACTURER SPECIFICATIONS
  - TAPES OR MASTICS USED IN COMBINATION WITH AEROSOL SEALING SHALL COMPLY WITH APPLICABLE REQUIREMENTS OF UL 181, UL 181A, AND UL 181B, ASTM C731, C732 AND D2202.

120.4(c)
ALL DUCT INSULATION PRODUCT R-VALUES SHALL BE BASED ON INSULATION ONLY AND TESTED IN ACCORDANCE WITH ASTM C518 OR ASTM C177 AND CERTIFIED PER §110.8.

120.4(d)
INSTALLED THICKNESS OF DUCT INSULATION USED TO DETERMINE ITS R-VALUE SHALL BE DETERMINED AS FOLLOWS:
- DUCT BOARD, LINER, AND FACTORY-MADE RIGIDS: USE NOMINAL INSULATION THICKNESS
- DUCT WRAP: USE 75% (25% COMPRESSION) OF NOMINAL THICKNESS
- FACTORY-MADE FLEXIBLE AIR DUCTS: DIVIDE THE DIFFERENCE BETWEEN THE ACTUAL OUTSIDE DIAMETER AND NOMINAL INSIDE DIAMETER BY TWO.

120.4(e)
INSULATED FLEXIBLE DUCT PRODUCTS INSTALLED TO MEET THIS REQUIREMENT MUST INCLUDE LABELS (MAX INTERVALS OF 3 FT) SHOWING THERMAL RESISTANCE PERFORMANCE R-VALUE FOR THE DUCT INSULATION ITSELF BASED ON TESTS IN 120.4(c). AND INSTALLED THICKNESS DETERMINED BY 120.4(d)3.

Space Conditioning Mandatory Measures:

120.4(f) PROTECTION OF INSULATION
INSULATION SHALL BE PROTECTED FROM DAMAGE BY SUNLIGHT, MOISTURE, EQUIPMENT MAINTENANCE AND WIND. CELLULAR FOAM INSULATION SHALL BE PROTECTED, OR BE PAINTED WITH A WATER RETARDANT COATING THAT PROVIDES SHIELDING FROM SOLAR RADIATION.

S&K CONSULTING SERVICES
2233 Via Fernandez
Palos Verdes Est, CA 90274
p. (310) 494-6910
w. www.skcsi.com

Client
City of Rolling Hills
2 Portuguese Bend Rd
Rolling Hills, CA 90274

Project
ROLLING HILLS CITY HALL HVAC REPLACEMENT

Address
2 PORTUGUESE BEND RD
ROLLING HILLS, CA 90274

Stamp
LICENSED PROFESSIONAL ENGINEER
SAMUEL W. SMOLKER
M-30818
MECHANICAL
STATE OF CALIFORNIA

Approvals

Project No:	092226
Permit App No:	-
Project Phase:	100% Design
Date:	12/28/2022
Drawn By:	EP
Checked By:	SS
Sheet Size:	24" x 36"

Revisions

No	Date	Description

Sheet Title
TITLE 24 MANDATORY MEASURES

Sheet No.
M0.03

DATE: 12/28/2022 4:54 PM
FILE: G:\SKPROJECTS\2022\092226 - CRH CITY HALL HVAC REPLACEMENT\CAD\05 MECHANICAL\M0.03 TITLE 24 MANDATORY MEASURES.DWG

STATE OF CALIFORNIA
Mechanical Systems
NRCC-MCH-E — CALIFORNIA ENERGY COMMISSION

CERTIFICATE OF COMPLIANCE — **NRCC-MCH-E**

This document is used to demonstrate compliance for mechanical systems that are within the scope of the permit application and are demonstrating compliance using the prescriptive path outlined in §140.4, or §141.0(b)2 for alterations.

Project Name:	Rolling Hills City Hall HVAC Repair Project	**Report Page:**	**(Page 1 of 11)**
Project Address:		**Date Prepared:**	2022-11-19T06:50:25-05:00

A. GENERAL INFORMATION

01	Project Location (city)	Rolling Hills	04	Total Conditioned Floor Area	2950
02	Climate Zone	6	05	Total Unconditioned Floor Area	530
03	Occupancy Types Within Project:		06	# of Stories (Habitable Above Grade)	1

☒ Office (B) ☐ Retail (M) ☐ Non-refrigerated Warehouse (S)
☐ Hotel/ Motel Guest Rooms (R-1) ☐ School (E) ☐ Healthcare Facility (I)
☐ High-Rise Residential (R-2/R-3) ☐ Relocatable Class Bldg (E) ☐ Other (Write In)

B. PROJECT SCOPE

This table includes mechanical systems or components that are within the scope of the permit application and are demonstrating compliance using the prescriptive path outlined in §140.4, or §141.0(b)2 for alterations.

01 Air System(s)	02 Wet System Components	03 Dry System Components
☒ Heating Air System	☐ Water Economizer	☒ Air Economizer
☒ Cooling Air System	☐ Pumps	☐ Electric Resistance Heat
Mechanical Controls	☐ System Piping	☐ Fan Systems
☒ Mechanical Controls (existing to remain, altered or new)	☐ Cooling Towers	☒ Ductwork (existing to remain, altered or new)
	☐ Chillers	☐ Ventilation
	☐ Boilers	☐ Zonal Systems/ Terminal Boxes

STATE OF CALIFORNIA
Mechanical Systems
NRCC-MCH-E — CALIFORNIA ENERGY COMMISSION

CERTIFICATE OF COMPLIANCE			**NRCC-MCH-E**
Project Name:	Rolling Hills City Hall HVAC Repair Project	**Report Page:**	**(Page 2 of 11)**
Project Address:		**Date Prepared:**	2022-11-19T06:50:25-05:00

C. COMPLIANCE RESULTS

Table C will indicate if the project data input into the compliance document is compliant with mechanical requirements. This table is not editable by the user. If this table says "DOES NOT COMPLY" or "COMPLIES with Exceptional Conditions" refer to Table D., or the table indicated as not compliant for guidance.

01		02		03		04		05		06		07		08	09
System Summary §110.1, §110.2, §140.4	AND	Pumps §140.4(k)	AND	Fans/ Economizers §140.4(c), §140.4(e)	AND	System Controls §110.2, §120.2, §140.4(f)	AND	Ventilation §120.1	AND	Terminal Box Controls §140.4(d)	AND	Distribution §120.3, §140.4(l)	AND	Cooling Towers §110.2(e)2	Compliance Results
(See Table F)		(See Table G)		(See Table H)		(See Table I)		(See Table J)		(See Table K)		(See Table L)		(See Table M)	
Yes	AND		AND	Yes	AND	Yes	AND		AND		AND	Yes	AND		COMPLIES
Mandatory Measures Compliance (See Table Q for Details)												COMPLIES			

D. EXCEPTIONAL CONDITIONS

This table is auto-filled with uneditable comments because of selections made or data entered in tables throughout the form.

E. ADDITIONAL REMARKS

This table includes remarks made by the permit applicant to the Authority Having Jurisdiction.

(General Remarks) The original project intent is to repair/replace the existing system like-for-like. Based on the condition of the existing ducting, inefficient zone distribution, and incorrect equipment installation locations, design changes had to be made to meet current code requirements.

Registration Number: — Generated Date/Time: — Documentation Software: Energy Code Ace
CA Building Energy Efficiency Standards - 2019 Nonresidential Compliance — Report Version: 2019.1.003 Schema Version: rev 20200601 — Compliance ID: 76414 Report Generated: 2022-11-19 03:50:31

STATE OF CALIFORNIA
Mechanical Systems
NRCC-MCH-E — CALIFORNIA ENERGY COMMISSION

CERTIFICATE OF COMPLIANCE			**NRCC-MCH-E**
Project Name:	Rolling Hills City Hall HVAC Repair Project	**Report Page:**	**(Page 3 of 11)**
Project Address:		**Date Prepared:**	2022-11-19T06:50:25-05:00

F. HVAC SYSTEM SUMMARY (DRY & WET SYSTEMS)

This table is used to demonstrate compliance for mechanical equipment with mandatory requirements found in §110.1 and §110.2(a) and prescriptive requirements found in §140.4(a), §140.4(b) and §140.4(k) or §141.0(b)2 for alterations.

Dry System Equipment Sizing (includes air conditioners, condensers, heat pumps, VRF, furnaces and unit heaters)

01	02	03	04	05	06	07	08	09	10	11
				Equipment Sizing per Mechanical Schedule (kBtu/h) §140.4 (a&b)						
				Heating Output[2,3]			Cooling Output[2,3]		Load Calculations[3,4]	
Name or Item Tag	Equipment Category per Tables 110.2	Equipment Type per Tables 110.2 / Title 20	Smallest Size Available[1] §140.4(a)	Per Design (kBtu/h)	Rated (kBtu/h)	Supp. Heating Output (kBtu/h)	Sensible Per Design (kBtu/h)	Rated (kBtu/h)	Total Heating Load (kBtu/h)	Total Sensible Cooling Load (kBtu/h)
FU-1, AC-1, CC-1	Furnace + AC	AC, air cooled, split + warm-air central furnace, gas-fired	NA: Altered per §141.0(b)2E	60	78	0	42	46.5	53	39
FU-2, AC-2, CC-2	Furnace + AC	AC, air cooled, split + warm-air central furnace, gas-fired	NA: Altered per §141.0(b)2E	60	78	0	42	46.5	60	41
FU-3, AC-3, CC-3	Furnace + AC	AC, air cooled, split + warm-air central furnace, gas-fired	NA: Altered per §141.0(b)2E	60	78	0	46.5	46.5	48	40

[1] *FOOTNOTES: Equipment shall be the smallest size, within the available options of the desired equipment line, necessary to meet the design heating and cooling loads of the building per §140.4(a). Healthcare facilities are excepted.*
[2] *It is common practice to show rated output capacity on the equipment schedule. Sensible cooling output comes from specification sheet tables.*
[3] *If equipment is heating only, leave cooling output and load blank. If equipment is cooling only, leave heating output and load blank.*
[4] *Authority Having Jurisdiction may ask for load calculations used for compliance per §140.4(b).*

Registration Number: — Generated Date/Time: — Documentation Software: Energy Code Ace
CA Building Energy Efficiency Standards - 2019 Nonresidential Compliance — Report Version: 2019.1.003 Schema Version: rev 20200601 — Compliance ID: 76414 Report Generated: 2022-11-19 03:50:31

STATE OF CALIFORNIA
Mechanical Systems
NRCC-MCH-E — CALIFORNIA ENERGY COMMISSION

CERTIFICATE OF COMPLIANCE			**NRCC-MCH-E**
Project Name:	Rolling Hills City Hall HVAC Repair Project	**Report Page:**	**(Page 4 of 11)**
Project Address:		**Date Prepared:**	2022-11-19T06:50:25-05:00

F. HVAC SYSTEM SUMMARY (DRY & WET SYSTEMS)

Dry System Equipment Efficiency (other than Package Terminal Air Conditioners (PTAC) and Package Terminal Heat Pumps (PTHP))

01	02	03	04	05	06	07	08	09
		Heating Mode				Cooling Mode		
Name or Item Tag	Size Category (Btu/h)	Rating Condition (°F)	Efficiency Unit	Minimum Efficiency Required per Tables 110.2 / Title 20	Design Efficiency	Efficiency Unit	Minimum Efficiency Required per Tables 110.2 / Title 20	Design Efficiency
FU-1, AC-1, CC-1	>=45kBtuh cooling/ <225kBtuh heating		AFUE	0.8	0.97	EER SEER	11.7 14	12.5 15
FU-2, AC-2, CC-2	>=45kBtuh cooling/ <225kBtuh heating		AFUE	0.8	0.97	EER SEER	11.7 14	12.5 15
FU-3, AC-3, CC-3	>=45kBtuh cooling/ <225kBtuh heating		AFUE	0.8	0.97	EER SEER	11.7 14	12.5 15

G. PUMPS

This section does not apply to this project.

H. FAN SYSTEMS & AIR ECONOMIZERS

This table is used to demonstrate compliance with prescriptive requirements found in §140.4(c), §140.4(e) and §140.4(m) for fan systems. Fan systems serving only process loads are exempt from these requirements and do not need to be included in Table H.

System Name:	Zone 1 - Offices, EC-1	**Economizer:**[1]	Differential Temperature	**Economizer Controls:**	Designed per §140.4(e) and (m)	**System Fan Type:**	Variable Air Volume
01	02	03	04	05	06	07	08
Fan Name or Item Tag	Fan Function	Qty	Maximum Design Supply Airflow (CFM)	HP Unit[2]	Design HP	Fan Power Pressure Drop Adjustment - Table 140.4-B	
						Device	Design Airflow through Device (CFM)
FU-1	Supply	1	1588	Nameplate HP	0.75		
Total System Design Supply Airflow (CFM):			1588	Total System Design (B)HP:	0.75	**Maximum System Fan Power (B)HP:**	

Registration Number: — Generated Date/Time: — Documentation Software: Energy Code Ace
CA Building Energy Efficiency Standards - 2019 Nonresidential Compliance — Report Version: 2019.1.003 Schema Version: rev 20200601 — Compliance ID: 76414 Report Generated: 2022-11-19 03:50:31

STATE OF CALIFORNIA
Mechanical Systems
NRCC-MCH-E — CALIFORNIA ENERGY COMMISSION

CERTIFICATE OF COMPLIANCE			**NRCC-MCH-E**
Project Name:	Rolling Hills City Hall HVAC Repair Project	**Report Page:**	**(Page 5 of 11)**
Project Address:		**Date Prepared:**	2022-11-19T06:50:25-05:00

H. FAN SYSTEMS & AIR ECONOMIZERS

System Name:	Zone 2 - Lobby/Reception, EC-2	**Economizer:**[1]	Differential Temperature	**Economizer Controls:**	Designed per §140.4(e) and (m)	**System Fan Type:**	Variable Air Volume
01	02	03	04	05	06	07	08
Fan Name or Item Tag	Fan Function	Qty	Maximum Design Supply Airflow (CFM)	HP Unit[2]	Design HP	Fan Power Pressure Drop Adjustment - Table 140.4-B	
						Device	Design Airflow through Device (CFM)
FU-2	Supply	1	1588	Nameplate HP	0.75		
Total System Design Supply Airflow (CFM):			1588	Total System Design (B)HP:	0.75	**Maximum System Fan Power (B)HP:**	

System Name:	Zone 3 - Council Chambers, EC-3	**Economizer:**[1]	Differential Temperature	**Economizer Controls:**	Designed per §140.4(e) and (m)	**System Fan Type:**	Variable Air Volume
01	02	03	04	05	06	07	08
Fan Name or Item Tag	Fan Function	Qty	Maximum Design Supply Airflow (CFM)	HP Unit[2]	Design HP	Fan Power Pressure Drop Adjustment - Table 140.4-B	
						Device	Design Airflow through Device (CFM)
FU-3	Supply	1	1588	Nameplate HP	0.75		
Total System Design Supply Airflow (CFM):			1588	Total System Design (B)HP:	0.75	**Maximum System Fan Power (B)HP:**	

[1] *FOOTNOTES: Computer room economizers must meet requirements of §140.9(g) and will be documented on the NRCC-PRC-E document.*
[2] *The unit used for HP must be consistent for all fans within a system.*

Registration Number: — Generated Date/Time: — Documentation Software: Energy Code Ace
CA Building Energy Efficiency Standards - 2019 Nonresidential Compliance — Report Version: 2019.1.003 Schema Version: rev 20200601 — Compliance ID: 76414 Report Generated: 2022-11-19 03:50:31

STATE OF CALIFORNIA
Mechanical Systems
NRCC-MCH-E — CALIFORNIA ENERGY COMMISSION

CERTIFICATE OF COMPLIANCE			**NRCC-MCH-E**
Project Name:	Rolling Hills City Hall HVAC Repair Project	**Report Page:**	**(Page 6 of 11)**
Project Address:		**Date Prepared:**	2022-11-19T06:50:25-05:00

I. SYSTEM CONTROLS

This table is used to demonstrate compliance with mandatory controls in §110.2 and §120.2 and prescriptive controls in §140.4(f) and (n) or requirements in §141.0(b)2E for altered space conditioning systems.

01	02	03	04	05	06	07	08	09
System Name	System Zoning	Conditioned Floor Area Being Served (ft²)	Thermostats §110.2(b) & (c)[1], §120.2(a)or §141.0(b)2E	Shut-Off Controls §120.2(e)	Isolation Zone Controls §120.2(g)	Demand Response §110.12 and §120.2(b)	Supply Air Temp. Reset §140.4(f)	Window Interlocks per §140.4(n)
Zone 1 - Offices	Single zone	<= 25,000 ft²	Setback + DR Tstat per §110.12	NA: Altered per §141.0(b)2E	NA: Single Zone	DR Tstat per §110.12	NA: Single Zone	NA: Alteration Project
Zone 2 - Lobby/Reception	Single zone	<= 25,000 ft²	Setback + DR Tstat per §110.12	NA: Altered per §141.0(b)2E	NA: Single Zone	DR Tstat per §110.12	NA: Single Zone	NA: Alteration Project
Zone 3 - Council Chambers	Single zone	<= 25,000 ft²	Setback + DR Tstat per §110.12	NA: Altered per §141.0(b)2E	NA: Single Zone	DR Tstat per §110.12	NA: Single Zone	NA: Alteration Project

[1] *FOOTNOTES: Gravity gas wall heaters, gravity floor heaters, gravity room heaters, non-central electric heaters, fireplaces or decorative gas appliances, wood stoves are not required to have setback thermostats.*
*Notes: Controls with a * require a note in the space below explaining how compliance is achieved. EX: system 1: SA Temp Reset: Exempt because zones compliant with §140.4(d) ; EXCEPTION 1 to §140.4(f)

J. VENTILATION AND INDOOR AIR QUALITY

This section does not apply to this project.

K. TERMINAL BOX CONTROLS

This section does not apply to this project.

L. DISTRIBUTION (DUCTWORK and PIPING)

This table is used to show compliance with mandatory pipe insulation requirements found in §120.3 and prescriptive requirements found in §140.4(l) for duct leakage testing.

Duct Leakage Sealing

Registration Number: — Generated Date/Time: — Documentation Software: Energy Code Ace
CA Building Energy Efficiency Standards - 2019 Nonresidential Compliance — Report Version: 2019.1.003 Schema Version: rev 20200601 — Compliance ID: 76414 Report Generated: 2022-11-19 03:50:31

S&K CONSULTING SERVICES
2233 Via Fernandez
Palos Verdes Est. CA 90274
p. (310) 494-6910
w. www.skcsi.com

Client
City of Rolling Hills
2 Portuguese Bend Rd
Rolling Hills, CA 90274

Project
ROLLING HILLS CITY HALL HVAC REPAIR

Address
2 PORTUGUESE BEND RD
ROLLING HILLS, CA 90274

Stamp
LICENSED PROFESSIONAL ENGINEER — SAMUEL W. SMOLEN — M-30818 — MECHANICAL — STATE OF CALIFORNIA

Approvals

Project No:	092226
Permit App No:	-
Project Phase:	100% Design
Date:	12/28/2022
Drawn By:	EP
Checked By:	SS
Sheet Size:	24" x 36"

Revisions

No	Date	Description

Sheet Title
TITLE 24 CERTIFICATE OF COMPLIANCE

Sheet No.
M0.04

DATE: 12/28/2022 4:54 PM
FILE: C:\Users\EricPerez\Documents - S&KSYNCACCT\2226 - CRH CITY HALL HVAC REPLACEMENT\Cad\05 MECHANICAL\M0.05 TITLE 24 CERTIFICATE OF COMPLIANCE.DWG

STATE OF CALIFORNIA
Mechanical Systems
NRCC-MCH-E — CALIFORNIA ENERGY COMMISSION

CERTIFICATE OF COMPLIANCE		NRCC-MCH-E
Project Name:	Rolling Hills City Hall HVAC Repair Project	**Report Page:** (Page 7 of 11)
Project Address:		**Date Prepared:** 2022-11-19T06:50:25-05:00

L. DISTRIBUTION (DUCTWORK and PIPING)

The answers to the questions below apply to the following duct systems: Zone 1 - Offices | Duct leakage testing triggered for these systems? Yes

11	No	The scope of the project includes only duct systems serving healthcare facilities	
12	Yes	Duct system provides conditioned air to an occupiable space for a constant volume, single zone, space-conditioning system.	
13	Yes	The space conditioning system serves less than 5,000 ft² of conditioned floor area.	
14	Yes	The combined surface area of the ducts in the following locations is more than 25% of the total surface area of the entire duct system:	
		☐	Outdoors
		☒	In a space directly under a roof that has a U-factor greater than the u-factor of the ceiling, or if the roof does not meet the requirements of §140.3(a)1B or if the roof has fixed vents or openings to the outside/ unconditioned spaces
		☐	In an unconditioned crawl space
		☐	In other unconditioned spaces
15	No	The scope of the project includes extending an existing duct system, which is constructed, insulated or sealed with asbestos.	
16	No	The scope of the project includes an existing duct system that is documented to have been previously sealed as confirmed through field verification and diagnostic testing in accordance with procedures in the Reference Nonresidential Appendix NA2.	
17		Duct system shall be sealed in acordance with the California Mechanical Code	

The answers to the questions below apply to the following duct systems: Zone 2 - Lobby/Reception | Duct leakage testing triggered for these systems? Yes

11	No	The scope of the project includes only duct systems serving healthcare facilities	
12	Yes	Duct system provides conditioned air to an occupiable space for a constant volume, single zone, space-conditioning system.	
13	Yes	The space conditioning system serves less than 5,000 ft² of conditioned floor area.	
14	Yes	The combined surface area of the ducts in the following locations is more than 25% of the total surface area of the entire duct system:	
		☐	Outdoors
		☒	In a space directly under a roof that has a U-factor greater than the u-factor of the ceiling, or if the roof does not meet the requirements of §140.3(a)1B or if the roof has fixed vents or openings to the outside/ unconditioned spaces
		☐	In an unconditioned crawl space
		☐	In other unconditioned spaces
15	No	The scope of the project includes extending an existing duct system, which is constructed, insulated or sealed with asbestos.	
16	No	The scope of the project includes an existing duct system that is documented to have been previously sealed as confirmed through field verification and diagnostic testing in accordance with procedures in the Reference Nonresidential Appendix NA2.	
17		Duct system shall be sealed in acordance with the California Mechanical Code	

Registration Number: | Generated Date/Time: | Documentation Software: Energy Code Ace

CA Building Energy Efficiency Standards - 2019 Nonresidential Compliance | Report Version: 2019.1.003 Schema Version: rev 20200601 | Compliance ID: 76414 Report Generated: 2022-11-19 03:50:31

STATE OF CALIFORNIA
Mechanical Systems
NRCC-MCH-E — CALIFORNIA ENERGY COMMISSION

CERTIFICATE OF COMPLIANCE		NRCC-MCH-E
Project Name:	Rolling Hills City Hall HVAC Repair Project	**Report Page:** (Page 8 of 11)
Project Address:		**Date Prepared:** 2022-11-19T06:50:25-05:00

L. DISTRIBUTION (DUCTWORK and PIPING)

The answers to the questions below apply to the following duct systems: Zone 3 - Council Chambers | Duct leakage testing triggered for these systems? Yes

11	No	The scope of the project includes only duct systems serving healthcare facilities	
12	Yes	Duct system provides conditioned air to an occupiable space for a constant volume, single zone, space-conditioning system.	
13	Yes	The space conditioning system serves less than 5,000 ft² of conditioned floor area.	
14	Yes	The combined surface area of the ducts in the following locations is more than 25% of the total surface area of the entire duct system:	
		☐	Outdoors
		☒	In a space directly under a roof that has a U-factor greater than the u-factor of the ceiling, or if the roof does not meet the requirements of §140.3(a)1B or if the roof has fixed vents or openings to the outside/ unconditioned spaces
		☐	In an unconditioned crawl space
		☐	In other unconditioned spaces
15	No	The scope of the project includes extending an existing duct system, which is constructed, insulated or sealed with asbestos.	
16	No	The scope of the project includes an existing duct system that is documented to have been previously sealed as confirmed through field verification and diagnostic testing in accordance with procedures in the Reference Nonresidential Appendix NA2.	
17		Duct system shall be sealed in acordance with the California Mechanical Code	

M. COOLING TOWERS

This section does not apply to this project.

N. DECLARATION OF REQUIRED CERTIFICATES OF INSTALLATION

Selections have been made based on information provided in previous tables of this document. If any selection needs to be changed, please explain why in Table E Additional Remarks. These documents must be provided to the building inspector during construction and can be found online at https://www.energy.ca.gov/title24/2019standards/2019_compliance_documents/Nonresidential_Documents/NRCI/

Form/Title
NRCI-MCH-01-E - Must be submitted for all buildings

Registration Number: | Generated Date/Time: | Documentation Software: Energy Code Ace

CA Building Energy Efficiency Standards - 2019 Nonresidential Compliance | Report Version: 2019.1.003 Schema Version: rev 20200601 | Compliance ID: 76414 Report Generated: 2022-11-19 03:50:31

STATE OF CALIFORNIA
Mechanical Systems
NRCC-MCH-E — CALIFORNIA ENERGY COMMISSION

CERTIFICATE OF COMPLIANCE		NRCC-MCH-E
Project Name:	Rolling Hills City Hall HVAC Repair Project	**Report Page:** (Page 9 of 11)
Project Address:		**Date Prepared:** 2022-11-19T06:50:25-05:00

O. DECLARATION OF REQUIRED CERTIFICATES OF ACCEPTANCE

Selections have been made based on information provided in previous tables of this document. If any selection needs to be changed, please explain why in Table E Additional Remarks. These documents must be provided to the building inspector during construction and can be found online at https://www.energy.ca.gov/title24/2019standards/2019_compliance_documents/Nonresidential_Documents/NRCA/

Form/Title	Systems/Spaces To Be Field Verified
NRCA-MCH-04-A - Air Distribution Duct Leakage	Zone 1 - Offices; Zone 2 - Lobby/Reception; Zone 3 - Council Chambers
NRCA-MCH-05-A - Air Economizer Controls	Zone 1 - Offices, EC-1; Zone 2 - Lobby/Reception, EC-2; Zone 3 - Council Chambers, EC-3
NRCA-MCH-07-A Supply Fan Variable Flow Controls	FU-1; FU-2; FU-3
NRCA-MCH-13-A Automatic FDD for Air Handling Units and Zone Terminal Units Acceptance	FU-1, AC-1, CC-1; FU-2, AC-2, CC-2; FU-3, AC-3, CC-3

P. DECLARATION OF REQUIRED CERTIFICATES OF VERIFICATION

Selections have been made based on information provided in previous tables of this document. If any selection needs to be changed, please explain why in Table E Additional Remarks. These documents must be completed by a HERS Rater and provided to the building inspector during construction. The final documents must be created by a HERS Provider's registry, but drafts can be found online at https://www.energy.ca.gov/title24/2019standards/2019_compliance_documents/Nonresidential_Documents/NRCV/

Form/Title	Systems/Spaces To Be Field Verified
NRCV-MCH-04-H Duct Leakage Test *NOTE: Must be completed by a HERS Rater*	Zone 1 - Offices; Zone 2 - Lobby/Reception; Zone 3 - Council Chambers

Registration Number: | Generated Date/Time: | Documentation Software: Energy Code Ace

CA Building Energy Efficiency Standards - 2019 Nonresidential Compliance | Report Version: 2019.1.003 Schema Version: rev 20200601 | Compliance ID: 76414 Report Generated: 2022-11-19 03:50:31

STATE OF CALIFORNIA
Mechanical Systems
NRCC-MCH-E — CALIFORNIA ENERGY COMMISSION

CERTIFICATE OF COMPLIANCE		NRCC-MCH-E
Project Name:	Rolling Hills City Hall HVAC Repair Project	**Report Page:** (Page 10 of 11)
Project Address:		**Date Prepared:** 2022-11-19T06:50:25-05:00

Q. MANDATORY MEASURES DOCUMENTATION LOCATION

This table is used to indicate where mandatory measures are documented in the plan set or construction documentation.

	01	02
Compliance with Mandatory Measures documented through MCH Mandatory Measures Note Block	Yes	M0.03

Registration Number: | Generated Date/Time: | Documentation Software: Energy Code Ace

CA Building Energy Efficiency Standards - 2019 Nonresidential Compliance | Report Version: 2019.1.003 Schema Version: rev 20200601 | Compliance ID: 76414 Report Generated: 2022-11-19 03:50:31

STATE OF CALIFORNIA
Mechanical Systems
NRCC-MCH-E — CALIFORNIA ENERGY COMMISSION

CERTIFICATE OF COMPLIANCE		NRCC-MCH-E
Project Name:	Rolling Hills City Hall HVAC Repair Project	**Report Page:** (Page 11 of 11)
Project Address:		**Date Prepared:** 2022-11-19T06:50:25-05:00

DOCUMENTATION AUTHOR'S DECLARATION STATEMENT

I certify that this Certificate of Compliance documentation is accurate and complete.

Documentation Author Name: Sam Simon	Documentation Author Signature:
Company: S&K Consulting Services, LLC	Signature Date:
Address:	CEA/ HERS Certification Identification (if applicable):
City/State/Zip:	Phone:

RESPONSIBLE PERSON'S DECLARATION STATEMENT

I certify the following under penalty of perjury, under the laws of the State of California:

1. The information provided on this Certificate of Compliance is true and correct.
2. I am eligible under Division 3 of the Business and Professions Code to accept responsibility for the building design or system design identified on this Certificate of Compliance (responsible designer)
3. The energy features and performance specifications, materials, components, and manufactured devices for the building design or system design identified on this Certificate of Compliance conform to the requirements of Title 24, Part 1 and Part 6 of the California Code of Regulations.
4. The building design features or system design features identified on this Certificate of Compliance are consistent with the information provided on other applicable compliance documents, worksheets, calculations, plans and specifications submitted to the enforcement agency for approval with this building permit application.
5. I will ensure that a completed signed copy of this Certificate of Compliance shall be made available with the building permit(s) issued for the building, and made available to the enforcement agency for all applicable inspections. I understand that a completed signed copy of this Certificate of Compliance is required to be included with the documentation the builder provides to the building owner at occupancy.

Responsible Designer Name: Sam Simon	Responsible Designer Signature:
Company: S&K Consulting Services, LLC	Date Signed: 12/28/2022
Address:	License: M 40818
City/State/Zip:	Phone: 707-290-9844

Registration Number: | Generated Date/Time: | Documentation Software: Energy Code Ace

CA Building Energy Efficiency Standards - 2019 Nonresidential Compliance | Report Version: 2019.1.003 Schema Version: rev 20200601 | Compliance ID: 76414 Report Generated: 2022-11-19 03:50:31

DATE: 12/28/2022 4:34 PM
FILE: C:\Users\Sam\Documents\GitHub - S&K\PROJECTS\2226 - CRH CITY HALL HVAC REPLACEMENT\CAD\05 MECHANICAL\M5.05 TITLE 24 CERTIFICATE OF COMPLIANCE.DWG

S&K CONSULTING SERVICES
2233 Via Fernandez
Palos Verdes Est. CA 90274
p. (310) 494-6910
w. www.skcsi.com

Client
City of Rolling Hills
2 Portuguese Bend Rd
Rolling Hills, CA 90274

Project
ROLLING HILLS CITY HALL HVAC REPAIR

Address
2 PORTUGUESE BEND RD
ROLLING HILLS, CA 90274

Stamp
LICENSED PROFESSIONAL ENGINEER — SAMUEL W. SIMON — M 40818 — MECHANICAL — STATE OF CALIFORNIA

Approvals

Project No:	092226
Permit App No:	-
Project Phase:	100% Design
Date:	12/28/2022
Drawn By:	EP
Checked By:	SS
Sheet Size:	24" x 36"

Revisions

No	Date	Description

Sheet Title
TITLE 24 CERTIFICATE OF COMPLIANCE

Sheet No.
M0.05

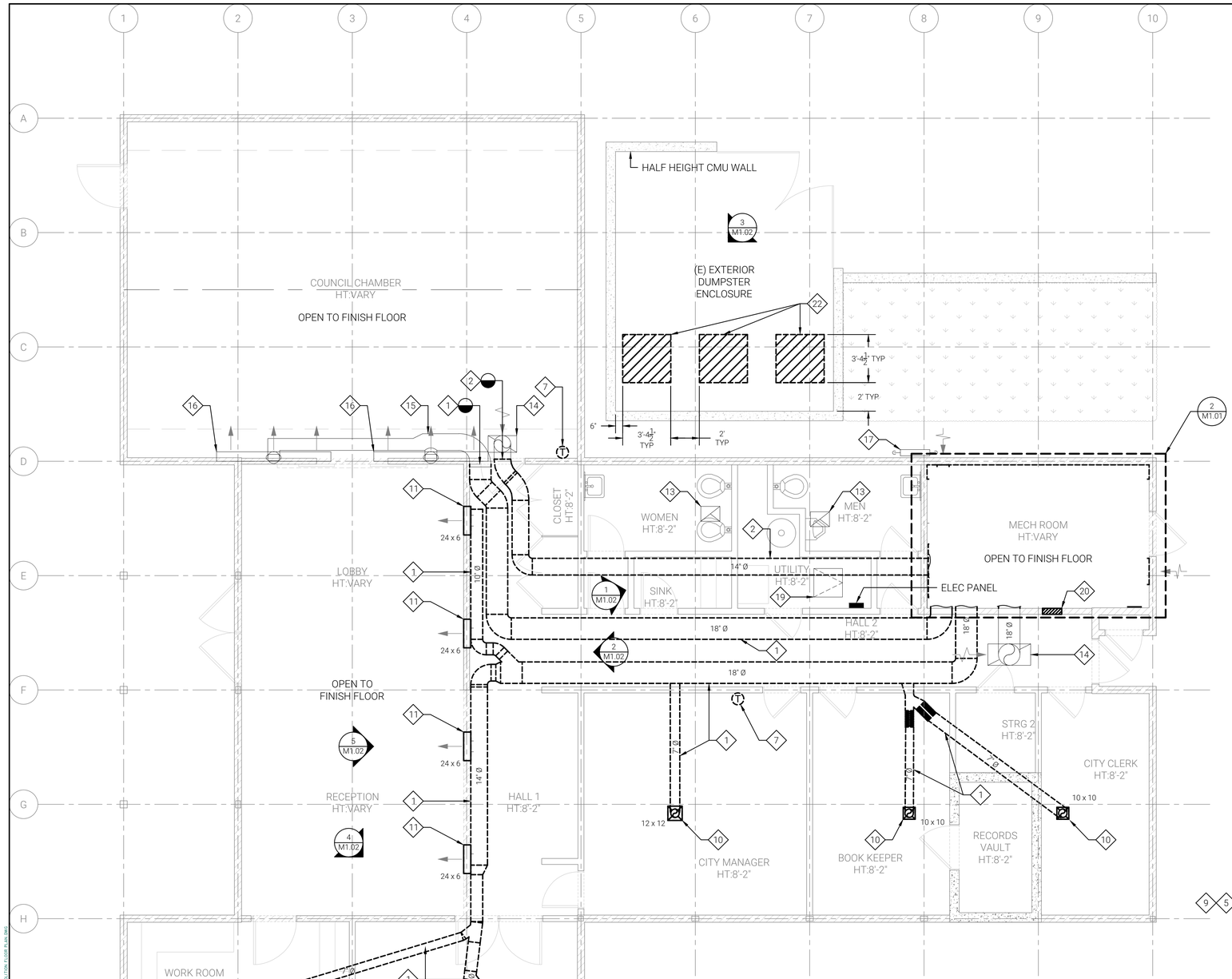

DEMOLITION KEYNOTES:

1. DEMO (E) INSULATED SA DUCT.
2. DEMO (E) INSULATED RA & OSA DUCT.
3. DEMO (E) FURNACE EXHAUST VENT AND CHIMNEY CEILING ATTACHMENT BELOW CEILING AND CAP PENETRATION. ROOF CAP TO REMAIN.
4. DEMO (E) NATURAL GAS FURNACE.
5. DEMO (E) COOLING COIL BOX.
6. DEMO (E) ECONOMIZERS AND ASSOCIATED SENSORS/ CONTROLS.
7. DEMO (E) THERMOSTAT AND CONTROL WIRING. PREP FOR (N) THERMOSTAT.
8. DEMO (E) CONDENSING UNITS & REFRIGERANT PIPING.
9. DEMO (E) CONDENSATE DRAIN PIPING.
10. DEMO (E) CEILING DIFFUSER. PROTECT ADJACENT CEILING.
11. DEMO (E) WALL DIFFUSER. PROTECT ADJACENT WALL.
12. DEMO (E) NG PIPING & INSTALL 1 ½" NG SHUTOFF VALVE.
13. PROTECT-IN-PLACE (E) BATHROOM EXHAUST.
14. PROTECT-IN-PLACE (E) RA GRILLE.
15. PROTECT-IN-PLACE (E) SA DUCT.
16. PROTECT-IN-PLACE (E) WALL DIFFUSER.
17. PROTECT-IN-PLACE (E) NG METER & SHUT-OFF VALVE. SEE GENERAL NOTES FOR NG DEMO PHASING.
18. PROTECT-IN-PLACE (E) FLOOR DRAIN.
19. PROTECT-IN-PLACE (E) ACCESS PANEL.
20. DEMO PORTION OF WALL APPROX. 11' AFF FOR (N) DUCT PENETRATION SEE M3.01 FOR LOCATION.
21. DEMO ABANDONED WOOD FRAMED PLENUM BOX AT EXTERIOR WALL
22. SAWCUT AND REMOVE (E) ASPHALT FOR (N) CONCRETE EQUIPMENT PADS

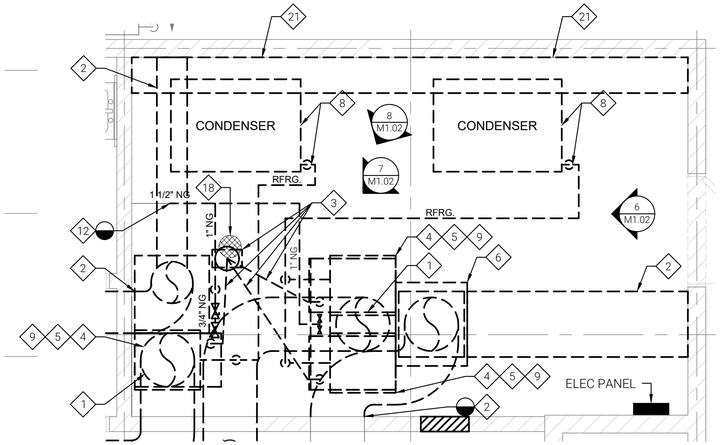

1 MECHANICAL CEILING DEMOLITION PLAN

SCALE: 1/4" = 1'

2 MECHANICAL DEMOLITION FLOOR PLAN

SCALE: 1/2" = 1'

GENERAL NOTES:

1. CONTRACTOR SHALL SUBMIT A PROPOSED SELECTIVE DEMOLITION PLAN IF ADDITIONAL ACCESS IS REQUIRED.
2. PRIOR TO ANY NG DEMO, CONTRACTOR SHALL:
   A. NOTIFY PROJECT MANAGER 72 HRS IN ADVANCE OF ANY INTERRUPTION OF SERVICE.
   B. RECORD ALL EQUIPMENT BEING SERVED.
   C. SHUTOFF NG SUPPLY AT BUILDING SERVICE
   D. INSTALL SHUTOFF VALVE AT DISCONNECT POINT.
   E. RETURN BUILDING NG SERVICE AND VERIFY OPERATION OF (E) EQUIPMENT.
3. SEE SPECIFICATIONS FOR REFRIGERANT DEMOLITION PLAN.
4. OWNER HAS THE RIGHT TO SALVAGE (E) EQUIPMENT
5. CONTRACTOR MUST PROVIDE RODENT ABATEMENT AND INSULATION CLEANING IN ATTIC AND MECHANICAL ROOM PRIOR TO DEMOLITION.
6. COORDINATE WITH OWNER FOR RELOCATING (E) DUMPSTERS

N

S&K CONSULTING SERVICES
2233 Via Fernandez
Palos Verdes Est, CA 90274
p. (310) 494-6910
w. www.skcsi.com

Client

City of Rolling Hills
2 Portuguese Bend Rd
Rolling Hills, CA 90274

Project

ROLLING HILLS CITY HALL HVAC REPAIR

Address

2 PORTUGUESE BEND RD
ROLLING HILLS, CA 90274

Stamp

LICENSED PROFESSIONAL ENGINEER
SAMUEL W. SMOOT
M-30818
MECHANICAL
STATE OF CALIFORNIA

Approvals

Project No:	092226
Permit App No:	-
Project Phase:	100% Design
Date:	12/28/2022
Drawn By:	EP
Checked By:	SS
Sheet Size:	24" x 36"

Revisions

No	Date	Description

Sheet Title

MECHANICAL DEMOLITION FLOOR PLAN

Sheet No.

M1.01

DATE: 12/28/2022 4:24 PM
FILE: C:\USERS\EMILY\DESKTOP\... - CRH CITY HALL HVAC REPLACEMENT\LAYOUTS\ MECHANICAL DEMOLITION FLOOR PLAN.DWG



1 ATTIC DUCTING
SCALE: -



2 ATTIC DUCTING
SCALE: -



3 DUMPSTER ENCLOSURE
SCALE: -



4 HIGH CEILING RECEPTION
SCALE: -



5 HIGH CEILING LOBBY
SCALE: -



6 MECHANICAL ROOM
SCALE: -

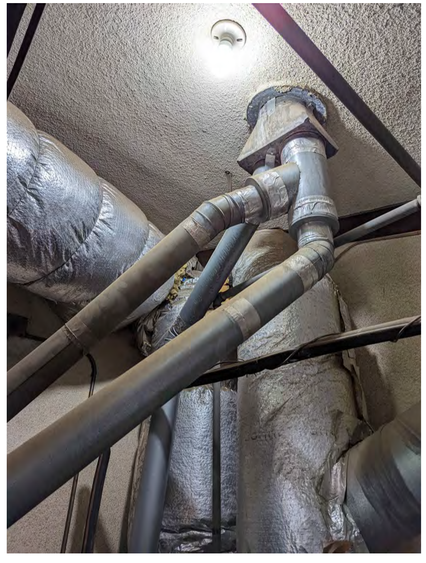

7 MECHANICAL ROOM VENT PIPING
SCALE: -

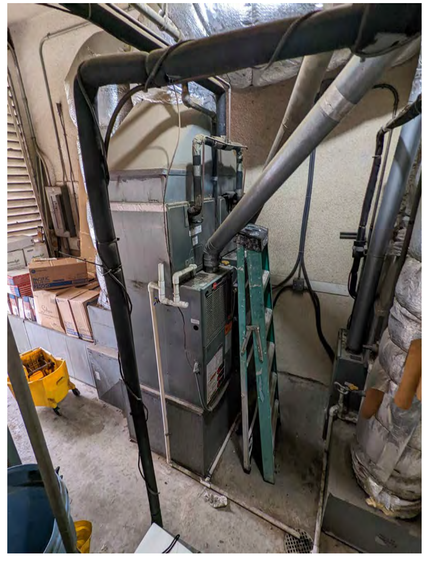

8 EXISTING FURNACES
SCALE: -

S&K CONSULTING SERVICES
2233 Via Fernandez
Palos Verdes Est, CA 90274
p. (310) 494-6910
w. www.skcsi.com

Client

City of Rolling Hills
2 Portuguese Bend Rd
Rolling Hills, CA 90274

Project

ROLLING HILLS CITY HALL HVAC REPAIR

Address

2 PORTUGUESE BEND RD
ROLLING HILLS, CA 90274

Stamp

LICENSED PROFESSIONAL ENGINEER
SAMUEL W. SIMONIAN
M-30818
MECHANICAL
STATE OF CALIFORNIA

Approvals

Project No:	092226
Permit App No:	-
Project Phase:	100% Design
Date:	12/28/2022
Drawn By:	EP
Checked By:	SS
Sheet Size:	24" x 36"

Revisions

No	Date	Description

Sheet Title

EXISTING CONDITIONS PHOTOGRAPHS

Sheet No.

M1.02

DATE: 12/28/2022 4:34 PM
FILE: C:\Users\Samuel\Desktop - S&K\PROJECTS\22\26 - CRH CITY HALL HVAC REPLACEMENT\CAD\05 MECHANICAL\M1.02 EXISTING CONDITIONS PHOTOGRAPHS.DWG

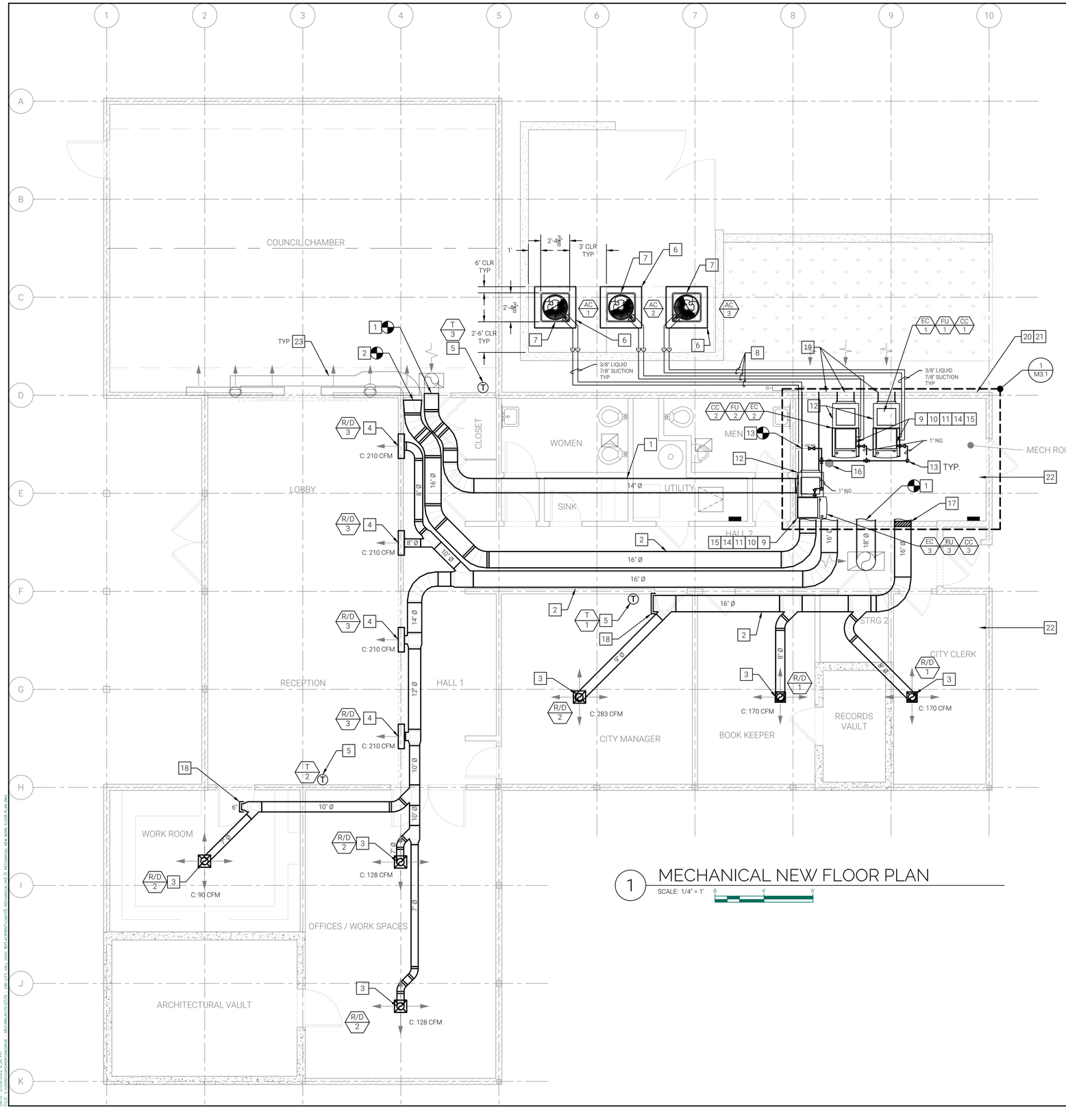

1 MECHANICAL NEW FLOOR PLAN
SCALE: 1/4" = 1'

GENERAL NOTES:

1. NEW DUCTING AND EQUIPMENT IS ONE METHOD SHOWN FOR REFERENCE. CONTRACTOR SHALL SUBMIT PROPOSED INSTALLATION SHOP DRAWINGS FOR APPROVAL PRIOR TO INSTALL.
2. DUCTING AND PIPING IN MECHANICAL ROOM NOT SHOWN FOR CLARITY. SEE M3.01.
3. TEST AND BALANCE EACH HVAC EQUIPMENT AND REGISTERS
4. INSTALL EQUIPMENT PER MFG INSTRUCTIONS
5. CONDENSATE DRAINS SHALL SLOPE DOWN MINIMUM 2%
6. MAXIMUM STATIC PRESSURE OF 0.8 INCH WC
7. CFM SHOWN FOR COOLING MODE. ZONE 1 SHALL BE PROGRAMMED FOR FIRST STAGE BLOWER SPEEDS ONLY
8. ALL REGISTERS SHALL BE PROVIDED WITH OPPOSED BLADE DAMPER CONTROL

NEW WORK KEYNOTES:

1. PROVIDE (N) INSULATED SA DUCT. ANCHOR AND BRACE PER DETAIL 1/M4.01
2. PROVIDE (N) INSULATED RA DUCT ANCHOR AND BRACE PER DETAIL 1/M4.01
3. PROVIDE (N) CEILING REGISTER WITH INTEGRATED DAMPER. PATCH AND PAINT SURFACE AS NEEDED TO MATCH EXISTING. SEE DETAIL 3/M4.01
4. PROVIDE (N) WALL REGISTER W/ INTEGRATED DAMPER. PATCH AND PAINT ADJACENT SURFACE TO MATCH EXISTING.
5. PROVIDE (N) ZONE TSTAT. MOUNT 48" AFF TO TOP OF T-STAT. PROVIDE ALL CONDUIT LABELING, WIRE, ETC. FOR FULL FUNCTIONALITY. CONTRACTOR MAY REUSE (E) CONDUIT. NEW CONDUIT MUST BE ROUTED INSIDE WALL AND/ OR ATTIC SPACE. PATCH AND PAINT ADJACENT SURFACE TO MATCH EXISTING.
6. PROVIDE (N) REINFORCED CONCRETE PAD PER DETAIL 5/M4.01.
7. PROVIDE (N) OUTDOOR AC UNIT. ANCHOR TO PAD. CONTRACTOR SHALL USE EITHER MFG SUPPLIED FOOT ANCHORS OR SNUBBER BRACKETS DESIGNED FOR SEISMIC LOAD.
8. PROVIDE (N) INSULATED REFRIGERANT PIPING. ROUTE FROM (N) OUTDOOR UNITS TO CORRESPONDING ZONE INDOOR COOLING COIL. SECURE RIGID PIPE TO UNISTRUT FLOOR/ WALL 6' O.C.
9. PROVIDE (N) NG FURNACE. FURNACE SHALL BE SECURELY FASTENED TO (N) FURNACE RETURN AIR SUPPORT BOX/BASE CAN. PROVIDE WITH PRE-FILTER AT BASE OF UNIT OR IN BASE CAN.
10. PROVIDE (N) INDOOR COOLING COIL. COOLING COIL SHALL BE SECURELY FASTENED TO FURNACE OR INDEPENDENTLY SUPPORTED.
11. PROVIDE (N) FURNACE RETURN AIR SUPPORT BOX/BASE CAN . FURNACE RETURN AIR SUPPORT BOX SHALL BE SIZED FOR CONNECTION TO ECONOMIZER AND MINIMAL PRESSURE LOSS. BASE CAN SHALL BE DESIGNED TO SEISMICALLY SUPPORT HVAC EQUIPMENT AND ANCHORED TO (E) FLOOR SLAB
12. PROVIDE (N) ECONOMIZER. ECONOMIZER SHALL BE INSTALLED WITH OA AND RA TEMPERATURE SENSOR INSTALLED FOR DIFFERENTIAL PRESSURE OPERATION. ECONOMIZER CONTROLS SHALL BE COMPATIBLE AND CONNECTED TO CORRESPONDING ZONE THERMOSTAT.
13. PROVIDE (N) NG PIPING SUPPLY TO FURNACES WITH SHUT-OFF VALVE AND SECURE WITH RIGID PIPE HANGER. SEE M3.01.
14. PROVIDE (N) 2" PVC FURNACE EXHAUST AND VENT PIPE THROUGH VENTED WALL. TERMINATE 12" BEYOND EXTERIOR WITH COMBINATION TERMINATION KIT, HIGH ON WALL. VENT PIPING SHALL BE SUPPORTED AND PROVIDED WITH MINIMAL BENDS. SEE M3.01
15. PROVIDE (N) $\frac{3}{4}$" CONDENSATE DRAIN LINES FOR COOLING COILS AND FURNACE. EXTEND TO FLOOR DRAIN.
16. SNAKE AND CLEAN (E) FLOOR DRAIN
17. FRAME (N) WALL OPENING FOR DUCT PENETRATION. SEE DETAIL 4/M4.01
18. PROVIDE (N) DUCT CAP
19. PROVIDE EXPANDED DUCT OPENING FOR OAR TO ECONOMIZER. SEE M3.01.
20. CLEAN AND REPAIR VENTED WALL MESH.
21. FRAME OUT (N) OPENING IN VENTED WALL FOR EXHAUST PENETRATION. SEE M3.01
22. SEAL (E) ATTIC AND MECHANICAL ROOM PENETRATIONS FOR RODENT PROTECTION WITH 18 GAUGE GALVANIZED STEEL WIRE MESH. MAX OPENING SIZE 1/4"
23. PROVIDE DUCT CLEANING FOR EXISTING DUCTS, GRILLS, AND DIFFUSERS

S&K CONSULTING SERVICES
2233 Via Fernandez
Palos Verdes Est, CA 90274
p. (310) 494-6910
w. www.skcsi.com

Client

City of Rolling Hills
2 Portuguese Bend Rd
Rolling Hills, CA 90274

Project

ROLLING HILLS CITY HALL HVAC REPAIR

Address

2 PORTUGUESE BEND RD
ROLLING HILLS, CA 90274

Stamp

LICENSED PROFESSIONAL ENGINEER
SAMUEL W. SIMONIAN
M-30818
MECHANICAL
STATE OF CALIFORNIA

Approvals

Project No:	092226
Permit App No:	-
Project Phase:	100% Design
Date:	12/28/2022
Drawn By:	EP
Checked By:	SS
Sheet Size:	24" x 36"

Revisions

No	Date	Description

Sheet Title

MECHANICAL NEW WORK FLOOR PLAN

Sheet No.

M2.01

DATE: 12/28/2022 4:54 PM
FILE: C:\USERS\EPANOSIAN\DESKTOP - S&K\PROJECTS\2226 - CRH CITY HALL HVAC REPLACEMENT\14\05 MECHANICAL\M2.01 MECHANICAL NEW WORK FLOOR PLAN.DWG

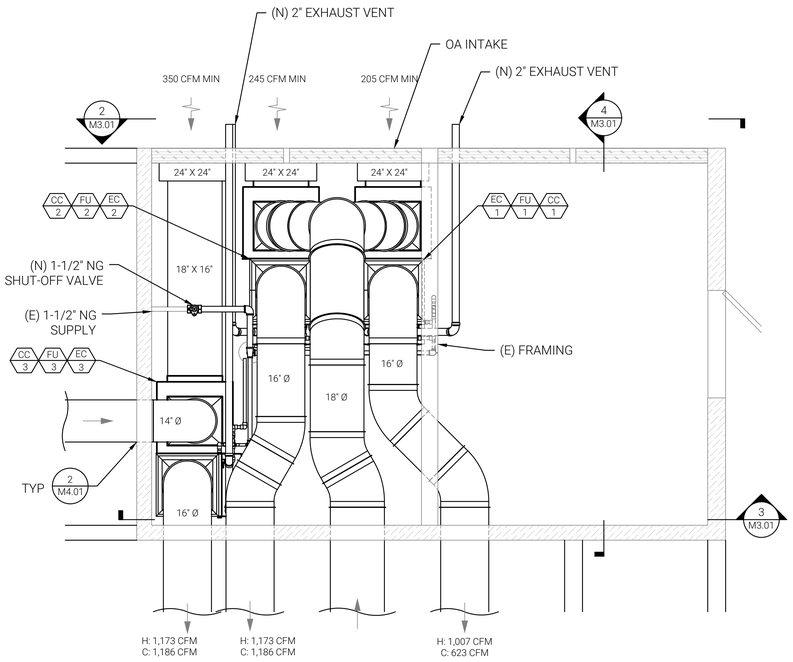

1 MECH ROOM ENLARGED FLOOR PLAN

SCALE: 1/2" = 1'

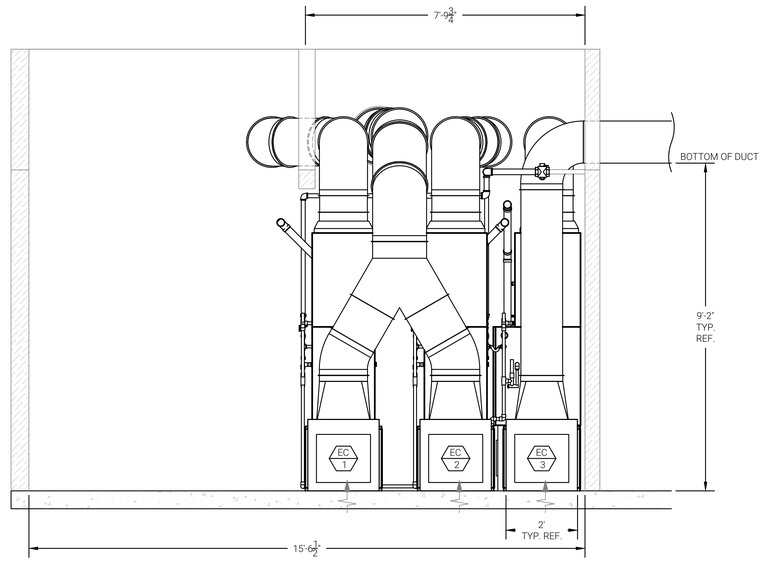

2 MECH ROOM NORTH ELEVATION

SCALE: 1/2" = 1'

GENERAL NOTES:

1. DUCT ROUTING AND EQUIPMENT LAYOUT IS FOR REFERENCE. CONTRACTOR MUST SUBMIT MECHANICAL SHOP DRAWINGS PRIOR TO INSTALLATION FOR APPROVAL
2. INSTALL ALL EQUIPMENT PER MANUFACTURERS RECOMMENDATION
3. INSTALL ALL EQUIPMENT AND DUCTING TIGHT TO NORTH WEST CORNER OF ROOM
4. FURNACE INTAKE VENT NOT SHOWN ON FLOOR PLAN FOR CLARITY. CONTRACTOR TO PROVIDE COMBINATION VENT/EXHAUST TERMINATION KIT.

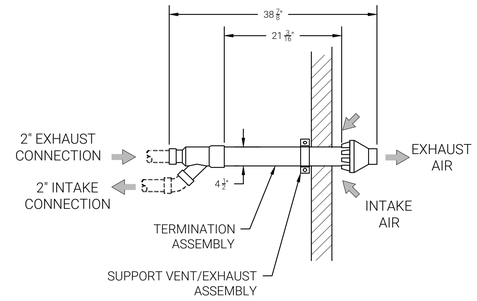

6 VENT/EXHAUST TERMINATION

SCALE: 1-1/2" = 1'

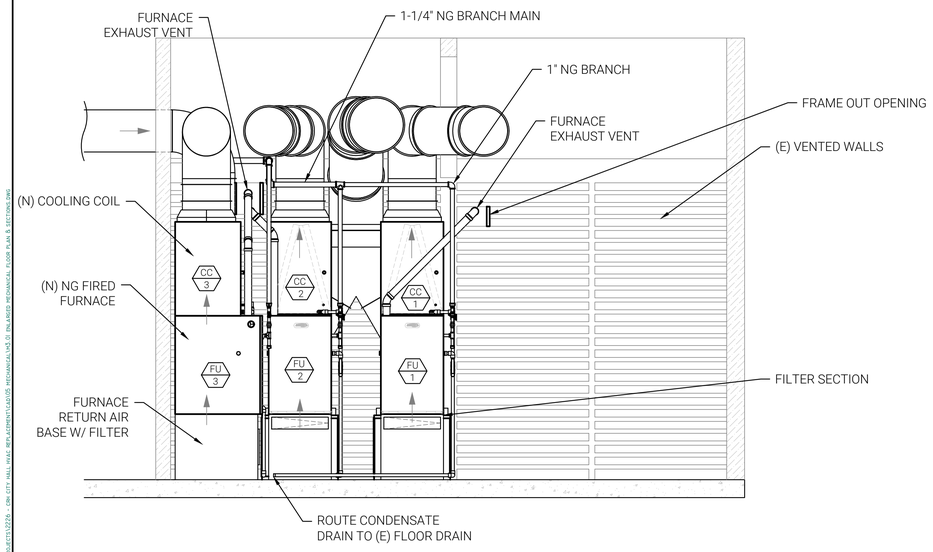

3 MECH ROOM SOUTH ELEVATION

SCALE: 1/2" = 1'

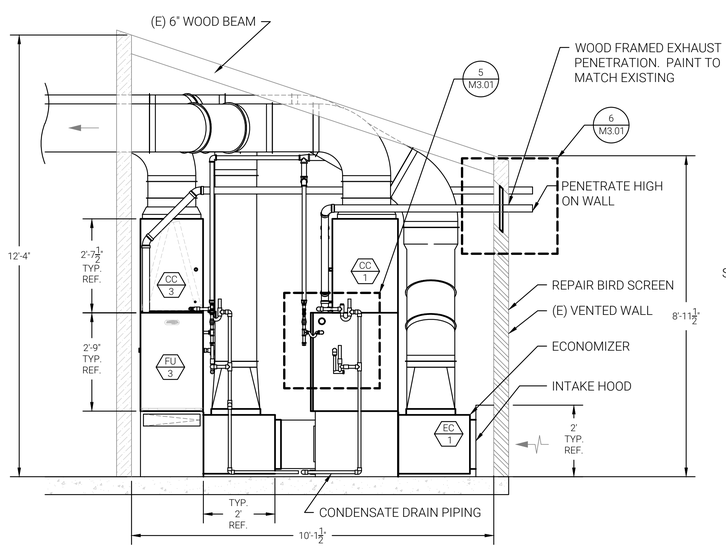

4 MECH ROOM EAST ELEVATION

SCALE: 1/2" = 1'

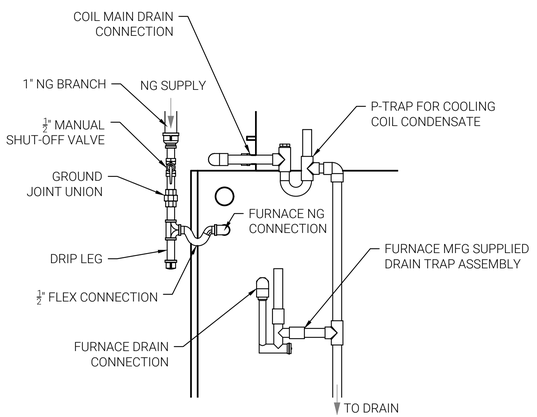

5 EQUIPMENT CONNECTIONS

SCALE: 1-1/2" = 1'

S&K CONSULTING SERVICES
2233 Via Fernandez
Palos Verdes Est, CA 90274
p. (310) 494-6910
w. www.skcsi.com

Client

City of Rolling Hills
2 Portuguese Bend Rd
Rolling Hills, CA 90274

Project

ROLLING HILLS CITY HALL HVAC REPAIR

Address

2 PORTUGUESE BEND RD
ROLLING HILLS, CA 90274

Stamp

LICENSED PROFESSIONAL ENGINEER
SAMUEL W. SMOLEN
M-30818
MECHANICAL
STATE OF CALIFORNIA

Approvals

Project No:	092226
Permit App No:	-
Project Phase:	100% Design
Date:	12/28/2022
Drawn By:	EP
Checked By:	SS
Sheet Size:	24" x 36"

Revisions

No	Date	Description

Sheet Title

ENLARGED MECHANICAL FLOOR PLAN & SECTIONS

Sheet No.

M3.01

DATE: 12/28/2022 4:34 PM
FILE: I:\PROJECTS\2022\092226 - CRH CITY HALL HVAC REPLACEMENT\LAYOUTS\M3.01 ENLARGED MECHANICAL FLOOR PLAN & SECTIONS.DWG

1. PROVIDE TRANSVERSE BRACING AT 30FT MIN AND LONGITUDINAL BRACING AT 60 FT MIN AND AT EACH CHANGE IN DIRECTION.*
2. COMPLY WITH TITLE 24, 2019 CBC SECTION 1616.
3. SEE ANSI/SMANCA 001-2008 CHAPTER 8 FOR BRACING SPACING AND SIZES FOR DUCT SIZES NOT SHOWN.
4. SEE ANSI/SMACNA 001-2008 TABLE 3-2 FOR CABLE SIZES NOT SHOWN.
5. USE INSULATED DUCT SUPPORTS TO MAINTAIN INSULATION VALUE IN SUPPORTED DUCT SECTIONS.
6. HANGERS MUST NOT DEFORM DUCT SHAPE.
7. CONTRACTOR TO VERIFY MINIMUM DUCT SUPPORT AND BRACING SPACING INDICATED ABOVE WITH THEIR DUCT SUPPORT DESIGN.
8. DUCT SUPPORT AND BRACING ANCHORAGE TO PRIMARY STRUCTURE SHALL BE DETAILED BY CONTRACTOR. SEE SPECIFICATIONS FOR DELEGATED DESIGN SUBMITTAL REQUIREMENTS.

*BRACING IS NOT REQUIRED FOR HANGER STRAPS LESS THAN 12" IN LENGTH

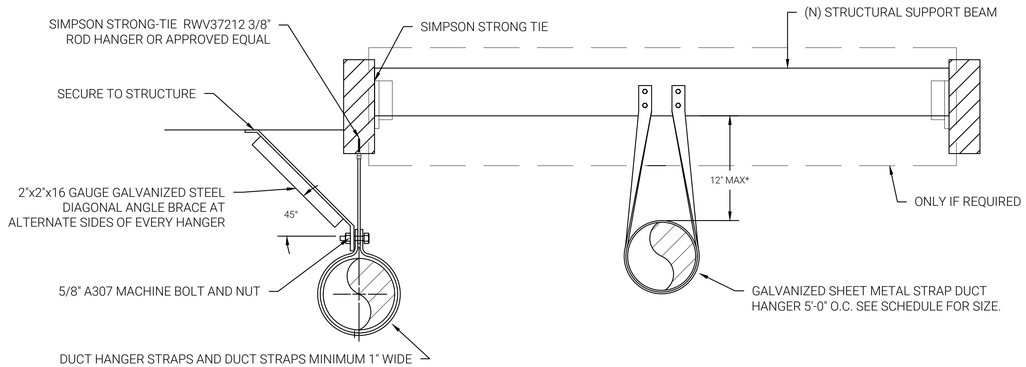

OPTION 2: HANGER STRAPS

OPTION 1: HANGER RODS

ROUND DUCT		
DIAMETER /INCHES	STRAP	MAX. LOAD EACH HANGER/LBS.
UP TO 20"	1"x 20 GA.	20
21" TO 36"	1"x 18 GA.	30

1 SINGLE DUCT HANGER
SCALE: NOT TO SCALE

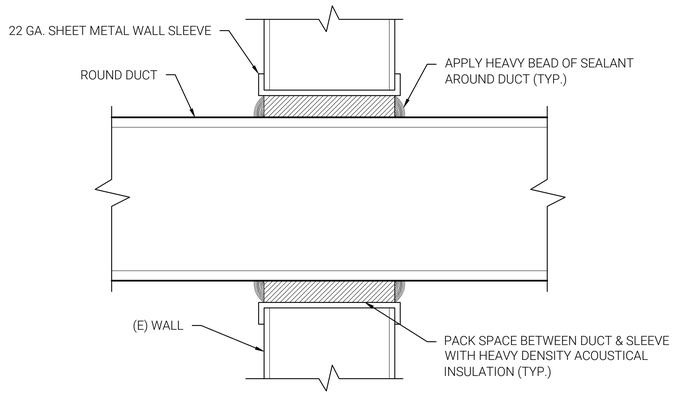

2 WALL PENETRATION DETAIL
SCALE: NOT TO SCALE

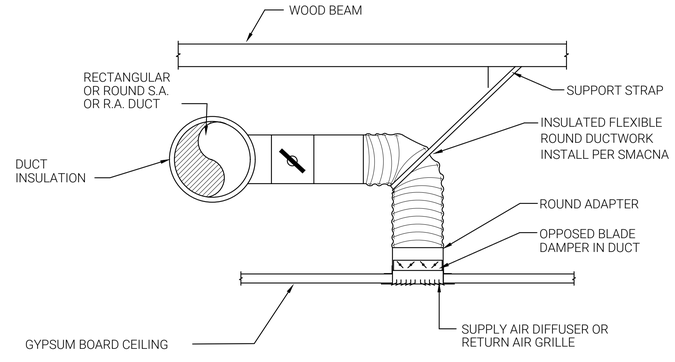

NOTES:

1. FLEXIBLE AIR DUCTS AND CONNECTORS SHALL NOT BE MORE THAN 5 FEET IN LENGTH.

3 TYPICAL DIFFUSER/ GRILLE INSTALLATION DETAIL
SCALE: NOT TO SCALE

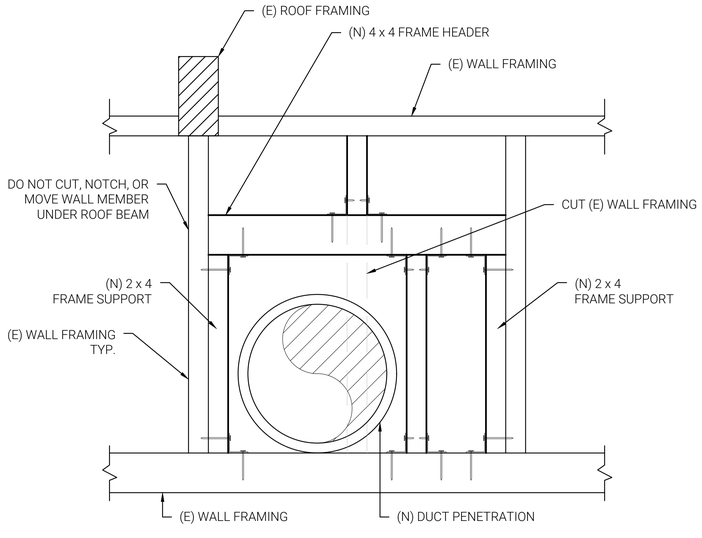

4 WALL FRAMING
SCALE: NOT TO SCALE

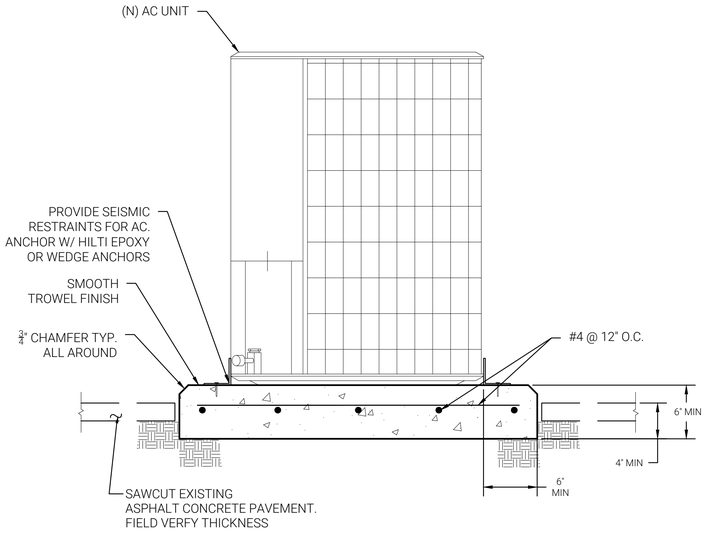

NOTE: SEE PLAN FOR PAD SIZE.

5 NEW CONCRETE PAD
SCALE: NOT TO SCALE

S&K CONSULTING SERVICES
2233 Via Fernandez
Palos Verdes Est, CA 90274
p. (310) 494-6910
w. www.skcsi.com

Client

City of Rolling Hills
2 Portuguese Bend Rd
Rolling Hills, CA 90274

Project

ROLLING HILLS CITY HALL HVAC REPAIR

Address

2 PORTUGUESE BEND RD
ROLLING HILLS, CA 90274

Stamp

LICENSED PROFESSIONAL ENGINEER
SAMUEL W. SIMONIAN
M-30818
MECHANICAL
STATE OF CALIFORNIA

Approvals

Project No:	092226
Permit App No:	-
Project Phase:	100% Design
Date:	12/28/2022
Drawn By:	EP
Checked By:	SS
Sheet Size:	24" x 36"

Revisions

No	Date	Description

Sheet Title

MECHANICAL DETAILS

Sheet No.

M4.01

DATE: 12/28/2022 4:34 PM
FILE: C:\USERS\SAMUEL\DESKTOP\092226 - CRH CITY HALL HVAC REPLACEMENT\CAD\05 MECHANICAL\M4.01 MECHANICAL DETAILS.DWG

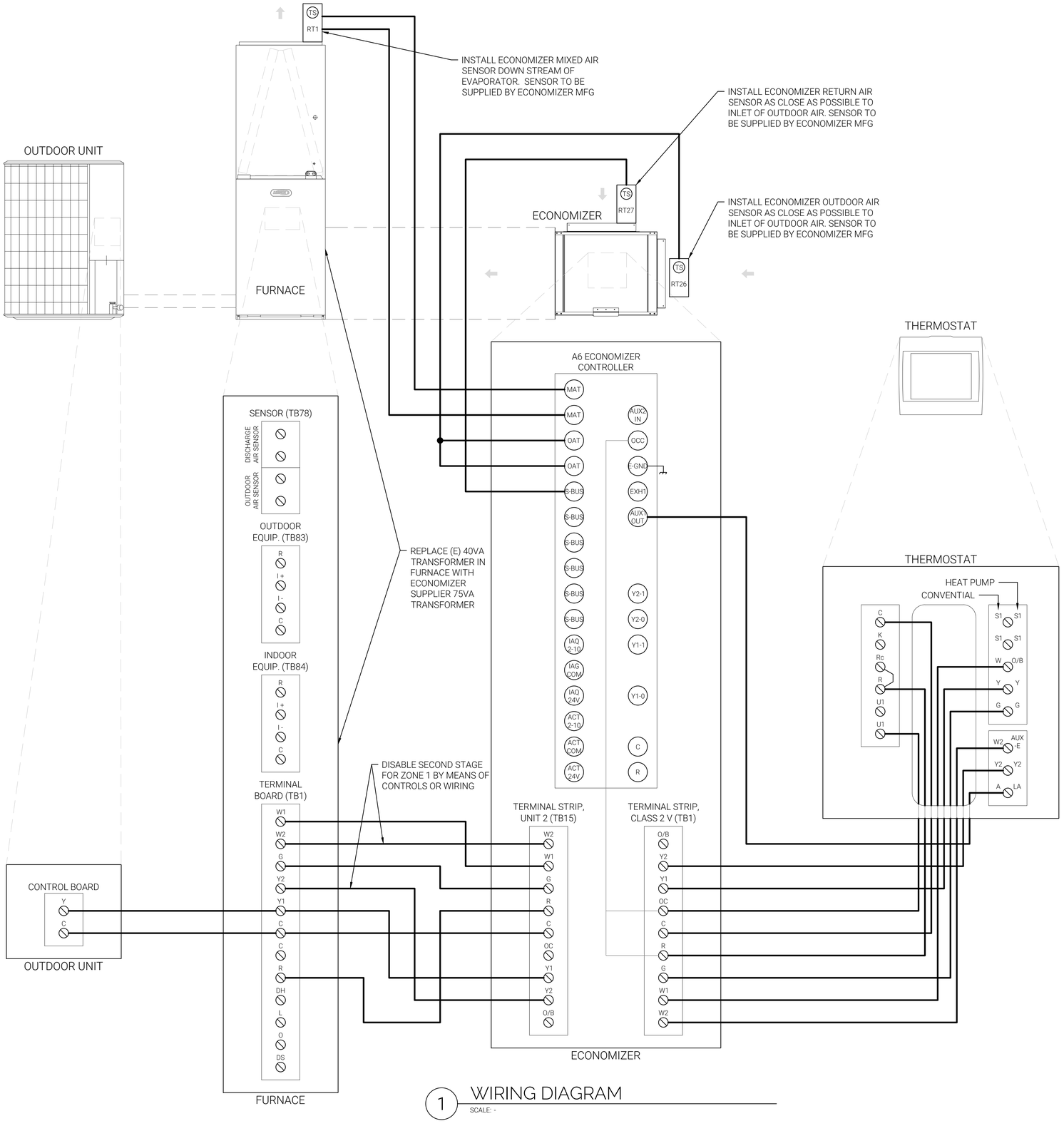

1 WIRING DIAGRAM

SCALE: -

GENERAL NOTES:

1. CONTRACTOR SHALL DEVELOP AND IMPLEMENT CONTROLS WITH EQUIPMENT CONTROLS REPRESENTATIVE. SYSTEM MUST PROVIDE AT A MINIMUM:
   - A. MINIMUM OUTSIDE AIR VENTILATION REQUIREMENTS PER ECONOMIZER SCHEDULE ON M0.2
   - B. TWO (2) STAGE HEATING AND COOLING.
   - C. 7-DAY PROGRAMMING BASED ON OCCUPANCY
   - D. WI-FI ENABLED USER ACCESS
2. ALL WIRING, CONDUITS, AND FITTINGS SHALL BE PROVIDED BY CONTRACTOR FOR FULL OPERATION. INSTALL CONDUIT IN WALL OR ABOVE CEILING

S&K CONSULTING SERVICES
2233 Via Fernandez
Palos Verdes Est, CA 90274
p. (310) 494-6910
w. www.skcsi.com

Client

City of Rolling Hills
2 Portuguese Bend Rd
Rolling Hills, CA 90274

Project

ROLLING HILLS CITY HALL HVAC REPAIR

Address

2 PORTUGUESE BEND RD
ROLLING HILLS, CA 90274

Stamp

LICENSED PROFESSIONAL ENGINEER
SAMUEL W. SIMONIAN
M 40818
MECHANICAL
STATE OF CALIFORNIA

Approvals

Project No:	092226
Permit App No:	-
Project Phase:	100% Design
Date:	12/28/2022
Drawn By:	EP
Checked By:	SS
Sheet Size:	24" x 36"

Revisions

No	Date	Description

Sheet Title

HVAC SCHEMATIC & CONTROLS

Sheet No.

M5.01

DATE: 12/28/2022 4:56:34 PM
FILE: C:\USERS\SAMUEL\DROPBOX (S&K)\PROJECTS\2226 - CRH CITY HALL HVAC REPLACEMENT\LAUNCH\01 MECHANICAL\M5.01 HVAC SCHEMATIC & CONTROLS.DWG

GENERAL NOTES

1. ALL WORK MUST BE PERFORMED IN COMPLIANCE WITH APPLICABLE CODES AND STANDARDS. SEE T0.1 FOR A LIST OF APPLICABLE CODES AND STANDARDS.
2. CEC 110.2 APPROVAL: ALL ELECTRICAL EQUIPMENT SHALL BE LABELED, LISTED, OR CERTIFIED BY A NATIONALLY RECOGNIZED TESTING LABORATORY ACCREDITED BY THE UNITED STATES OCCUPATIONAL SAFETY HEALTH ADMINISTRATION.
3. CEC 130.5(C): VOLTAGE DROP: THE MAXIMUM COMBINED VOLTAGE DROP ON BOTH INSTALLED FEEDER CONDUCTORS AND BRANCH CIRCUIT CONDUCTORS TO THE FARTHER CONNECTED LOAD OR OUTLET SHALL NOT EXCEED 5 PERCENT.
4. ALL CABLE/WIRE, CONDUIT RUNS ARE SHOWN DIAGRAMMATICALLY & THEY SHALL BE ROUTED TO SUIT ACTUAL FIELD CONDITIONS, EXCEPT WHERE LOCATIONS ARE EXPLICITLY DIMENSIONED ON THE DRAWINGS.
5. THE ELECTRICAL CONSTRUCTION DRAWINGS PROVIDED HEREIN ARE DIAGRAMMATIC AND SYMBOLIC IN REPRESENTATION. LOCATIONS DEPICTED ON THE DRAWINGS FOR ELECTRICAL EQUIPMENT/DEVICES (MOTORS, STARTERS, DISCONNECT SWITCHES, RECEPTACLES, JUNCTION/OUTLET BOXES, CONTROL SWITCHES, EQUIPMENT RACKS, SMALL TRANSFORMERS, ETC.) ARE ONLY APPROXIMATE. FURTHERMORE, THE EQUIPMENT/DEVICE DEPICTIONS ARE GENERALLY SYMBOLIC AND NOT DRAWN TO SCALE.
6. IN EVENT OF CONFLICT OR DISCREPANCY BETWEEN DRAWINGS, SPECIFICATIONS, CONTRACT DOCUMENTS, SPECIFICATIONS, DRAWINGS AND SITE CONDITIONS, THE CONTRACTOR SHALL PROVIDE THE MORE STRINGENT OF THE DRAWINGS, SPECIFICATIONS, AND CONTRACT DOCUMENTS FOR THE CONSTRUCTIONS AND BIDDING PURPOSES.
7. ELECTRICAL DRAWINGS INDICATE NEW WORK, UNLESS OTHERWISE NOTED. EXISTING ELECTRICAL SYSTEMS ARE NOT SHOWN EXCEPT WHERE INTERFACING IS REQUIRED.
8. ALL NEW BOXES, PANELS, OUTLET COVERS, ENCLOSURES, ETC. MOUNTED ON THE EXTERIOR OF ANY STRUCTURE SHALL BE WEATHERPROOF (NEMA 3R MINIMUM) & ALSO PAINTED TO MATCH THE EXISTING BUILDING/STRUCTURE.
9. ALL EXISTING SURFACES DAMAGED BY NEW CONSTRUCTION, SHALL BE PATCHED, OR REPAINTED TO MATCH EXISTING CONDITIONS, PAINTED SURFACE SHALL BE PAINTED FROM BREAK TO BREAK. IT SHALL BE THE CONTRACTORS RESPONSIBILITY TO PATCH & REPAIR ALL DAMAGE TO EXISTING SURFACES AND FINISHES. FURTHERMORE, THE AFFECTED AREA(S) OF WORK SHALL BE REPAIRED TO MATCH THE FINISH THAT WAS PREVIOUSLY EXISTING, PRIOR TO THE COMMENCEMENT OF WORK.
10. RUN CONDUITS CONCEALED IN WALLS AND CEILINGS UNLESS NOTED. CUT EXISTING WALLS AS REQUIRED. PATCH AND PAINT TO MATCH EXISTING SURFACE.
11. UPDATE ALL POWER PANEL DIRECTORIES AND ELECTRICAL OUTLET IDENTIFICATION LABELS (KROYTAPE) TO REFLECT NEW CONSTRUCTION.
12. ALL FLEX AND SEALTIGHT CONDUIT SHALL HAVE A GROUND CONDUCTOR.
13. CONDUITS PENETRATING FIRE RATED AREAS SHALL BE SEALED, INSTALLED ON OUTSIDE OF CONDUIT, WITH APPROVED FIRE STOP MATERIAL TO MAINTAIN THE SAME FIRE RATING AS ORIGINAL.
14. ALL MATERIALS AND WORKS ARE NEW, UNLESS OTHERWISE NOTED. EXISTING ELECTRICAL SYSTEMS ARE NOT SHOWN EXCEPT WHERE INTERFACING IS REQUIRED.
15. MAINTAIN CONTINUITY OF ALL EXISTING CIRCUITS OR PORTIONS THEREOF AFFECTED BY NEW WORK.
16. CONTRACTOR SHALL VISIT AND FAMILIARIZE AT THE SITE PRIOR TO START OF PROJECT. COORDINATE WITH OWNER REPRESENTATIVE FOR EXACT LOCATION OF ALL EQUIPMENT.
17. SEISMIC ANCHORAGE OF ALL NEW AND EXISTING PIPING, CONDUIT, DUCTWORK, EQUIPMENT, PANELS, ETC. SHALL BE BY FOLLOWING THE MANUFACTURERS SPECIFICATIONS IN ACCORDANCE WITH THE 2019 CBC AND THE LATEST ISSUE OF "ENGINEERED SEISMIC BRACING OF SUSPENDED UTILITIES" AS PUBLISHED BY THE INTERNATIONAL SEISMIC APPLICATION TECHNOLOGY (ISAT) OPA-0485, MASON INDUSTRIES OPA-0349, TOLCO OPA-0300, COOPER B-LINE OPA-0114, OR M.W. SAUSSE OPA-0029 OR EQUAL.
18. CONDUIT FITTINGS FOR USE IN EMT RUNS SHALL BE GALVANIZED STEEL CONNECTORS AND COUPLINGS SHALL BE WATERTIGHT TYPE.
19. ALL SINGLE PHASE CIRCUITS SHALL HAVE A DEDICATED NEUTRAL.
20. ALL CONDUITS SHALL BE PROVIDED AN EQUIPMENT GROUNDING CONDUCTOR SIZED PER CEC 250.
21. ALL NEW (ADDITIONAL) METALLIC STRUCTURES AND EQUIPMENT FABRICATED WITH METALLIC MATERIALS SUCH AS GENERATORS, MOTOR FRAME, ENCLOSURES, ETC, PANELS, RACEWAY SHALL BE PERMANENTLY & EFFECTIVELY GROUNDED, WHETHER SHOWN ON DRAWING OR NOT. GROUND CABLE SHALL BE CONNECTED TO COLD WATER PIPE PER CEC 250.52(A)(1), TO BUILDING GROUNDING PER CEC 250.52(A)(2) OR CONNECTED TO GROUND ROD PER CEC 250.52(A)(5).
22. OWNER RESERVES THE RIGHT TO REQUIRE MINOR CHANGES IN LOCATION OF OUTLETS OR EQUIPMENT PRIOR TO ROUGHING-IN WITHOUT INCURRING ANY ADDITIONAL COST OR CHARGES.
23. DURING CONSTRUCTION, DO NOT INTERRUPT OR IMPEDE OPERATION AND WORK IN ADJACENT AREAS.
24. UPON COMPLETION OF ALL WORK, THOROUGHLY CLEAN ALL EQUIPMENT AND DUCTS FROM INSIDE AND OUTSIDE OF EQUIPMENT. REMOVE ALL TRACES OF SOIL, DUST, LABELS, GREASE, OIL, AND FOREIGN MATERIALS. CLEANUP AND REMOVE FROM THE PREMISES ALL DEBRIS AND SURPLUS MATERIAL CAUSED BY THIS WORK.
25. WHERE THERE IS A CONFLICT BETWEEN THE DRAWINGS & ANY RELEVANT CODES, THE CODES SHALL GOVERN, EXCEPT WHERE THE DRAWINGS INDICATE A QUALITY LEVEL SUPERIOR TO THAT SPECIFIED BY THE CODES.
26. THE WORD "PROVIDE" MEANS THAT THE CONTRACTOR SHALL FURNISH, INSTALL, ADJUST, TEST, AND INTEGRATE INTO A COMPLETE SYSTEM THE ITEM INDICATED INCLUDING ALL HARDWARE, WIRING AND MISCELLANEOUS ITEMS AS NECESSARY FOR A COMPLETE AND OPERATIONAL SYSTEM.

ABBREVIATIONS

AFF	ABOVE FINISHED FLOOR
AIC	AMPERE INTERRUPTING CAPACITY
A	AMPERE
CKT	CIRCUIT
CB	CIRCUIT BREAKER
CU	COPPER
D	DISTANCE
(D)	DEMOLITION
(E)	DENOTES EXISTING
EA	EACH
LV	LOW VOLTAGE
GND, G	GROUND
MIN	MINIMUM
NTS	NOT TO SCALE
P	POLE
PB	PULL BOX
PNL	PANELBOARD
(R)	RELOCATED
SLD	SINGLE LINE DIAGRAM
SUB	SUBSTATION
SW	SWITCH
SWBD	SWITCHBOARD
TYP.	TYPICAL
UG	UNDERGROUND
UON	UNLESS OTHERWISE NOTED
VD	VOLTAGE DROP
XFMR, TRANSF.	TRANSFORMER
WP	WEATHER PROOF
(N)	NEW
TD	TIME DELAY

TYPICAL PLAN LEGEND

- LIGHT, THIN LINES INDICATE EXISTING.
- HEAVY, THICK LINES INDICATE NEW
- HEAVY, SHORT DASHED LINES INDICATE DEMOLITION OR REMOVAL

ELECTRICAL SYMBOL LIST

- P4-10 — BRANCH CIRCUIT DESTINATION (PANEL NAME-CIRCUIT NUMBER)
  HOMERUN INDICATES PROVIDING CONDUIT AND CONDUCTORS
  MINIMUM CONDUIT SIZE: 3/4"
  MINIMUM CONDUCTOR SIZE: #12AWG
  PROVIDE 3/4"C-2#12+1#12G WHERE NO CONDUIT/WIRE SIZE IS STATED.
  PROVIDE DEDICATED NEUTRAL FOR ALL BRANCH CIRCUIT WIRING.
  CONTRACTOR RESPONSIBLE FOR DE-RATING CONDUIT WITH MORE THAN SIX CURRENT CARRYING CONDUCTORS PER CEC 310.
  #12 AWG FOR CIRCUITS UP TO 100'
  #10 AWG FOR CIRCUITS FROM 100' TO 200'
  #8 AWG FOR CIRCUIT GREATER THAN 200'
- PANELBOARD 480/277V, 3Ø, 4W OR 208/120V, 3Ø, 4W
- SWITCHBOARD 480/277V, 3Ø, 4W OR 208/120V, 3Ø, 4W
- UNFUSED DISCONNECT SIZED AS INDICATED ON DWGS. CONTRACTOR TO CONFIRM FUSE SIZING BASED ON EQUIPMENT MANUFACTURER RECOMMENDAITON
- (J) — JUNCTION BOX
- WP — 15A, 125V DUPLEX RECEPTACLE (NEMA 5-15R)
  SUBSCRIPTS DENOTE THE FOLLOWING:
  "WP" - WEATHERPROOFED
- (T) — THERMOSTAT
- $ — MANUAL SWITCH

S&K CONSULTING SERVICES
2233 Via Fernandez
Palos Verdes Est, CA 90274
p. (310) 494-6910
w. www.skcsi.com

JCCA J.C. CHANG & ASSOCIATES, INC.
ENGINEERS • ARCHITECTS • PLANNERS
385 VAN NESS AVENUE, SUITE 208
TORRANCE, CALIFORNIA 90501
PH (310) 212-7644
FAX (310) 212-5272
JCCA #: 22980-1

Client

City of Rolling Hills
2 Portuguese Bend Rd
Rolling Hills, CA 90274

Project

ROLLING HILLS CITY HALL HVAC REPAIR

Address

2 PORTUGUESE BEND RD
ROLLING HILLS, CA 90274

Stamp

REGISTERED PROFESSIONAL ENGINEER
SHAG KVANSOOYAN
No. E22793
Exp. 6/30/23
ELECTRICAL
STATE OF CALIFORNIA

Approvals

Project No:	092226
Permit App No:	-
Project Phase:	Preliminary Design
Date:	10/20/2022
Drawn By:	DR
Checked By:	SA
Sheet Size:	24" x 36"

Revisions

No	Date	Description
-	-	-

Sheet Title

ELECTRICAL GENERAL NOTES

Sheet No.

E0.01

DATE: 10/28/2022 4:35 PM
FILE: C:\Users\sa\Documents - SAVANVAE\T\22226 - ON CITY HALL HVAC REPLACEMENT\AE\08 ELECTRICAL\E0.0 ELECTRICAL GENERAL NOTES.DWG

PANEL: A — EXISTING

LOCATION : UTILITY ROOM
FLOOR : 1ST
MOUNTING : RECESSED

VOLTAGE/ PHASE : 240V/120V, 1Ø,3W
BUS AMPS : 225
MAIN BREAKER : M_O

FED FROM :
MINIMUM BUS BRACING :

LOADS	OUTLETS LTG	OUTLETS REC	OUTLETS MISC	VOLT-AMPS A	VOLT-AMPS B	VOLT-AMPS C	CKT	BKR/ POLE	A	B	C	BKR/ POLE	CKT	VOLT-AMPS A	VOLT-AMPS B	VOLT-AMPS C	OUTLETS LTG	OUTLETS REC	OUTLETS MISC	LOADS	
(E) ARCH. RM.							1	20/1				20/1	2							(E) BKKEEPER, BLDG INSP STOR. KITCH	
(E) ARCH. RM.							3	20/1				20/1	4							(E) CITY MANAGER	
(E) REPRODUCTION, VAULT							5	20/1				20/1	6							(E) SECRETARIES	
(E) MEN, WOMEN, M.E. ROOM							7	20/1				20/1	8							(E) LOBBY	
(E) COMMUNITY ROOM							9	20/1				20/1	10							(E) SECRETARIES, CORRIDOR	
(E) COMMUNITY ROOM							11	20/1				20/1	12							(E) EXTERIOR ON T.C.	
(E) COMMUNITY ROOM							13	20/1				20/1	14							(E) EXTERIOR ON T.C.	
(E) SPACE CAPACITY FOR GATE HOUSE							15	30/1				20/1	16							(E) EXTERIOR ON T.C.	
(E) SPACE CAPACITY FOR GATE HOUSE							17	20/1				20/1	18							(E) CITY MANAGER	
(E) REPRODUCTION							19	20/1				20/1	20							(E) KITCHENETTE GARBAGE DISPOSAL	
(E) REPRODUCTION							21	20/1				20/1	22							(E) REFRIGERATOR & UTILITY OUTLET	
(E) REPRODUCTION							23	20/1				20/1	24							(E) CITY MANAGER & BOOKKEEPER	
(E) REPRODUCTION							25	20/1				20/1	26							(E) CITY MGR, MEN, CORR, M.E. ROOM	
(E) REPRODUCTION							27	20/1				20/1	28							(E) COMMUNITY ROOM	
(E) ARCH. RM. VAULT EXTERIOR							29	20/1				20/1	30							(E) COMMUNITY ROOM	
(E) SECRETARIES							31	20/1				20/1	32							(E) TEL. TERM. BACKBOARD	
(E) EXTERIOR CNTR (TIME CLOCK)							33	20/1				15/1	34			1,212				(N) GAS FURNACE	2
(E) TIME CLOCK							35	20/1				15/1	36			1,212				(N) GAS FURNACE	2
(E) REPRODUCTION AREA GARB. DISP.							37	20/1				20/1	38							(E) EXTERIOR RECEPTACLES	
(E) ALARM SYSTEM							39	20/1				20/1	40							(E) EXTERIOR RECEPTACLES	
(E) SPARE							41	20/1				15/1	42			1,212				(N) GAS FURNACE	1

NOTES:

TOTAL 0A =	0 VOLT-AMPS	0 AMPS
TOTAL 0B =	1,212 VOLT-AMPS	10 AMPS
TOTAL 0C =	2,424 VOLT-AMPS	20 AMPS
LCL x 0.25 =	909 VOLT-AMPS	4 AMPS
LML x 0.25 =	0 VOLT-AMPS	0 AMPS
TOTAL PANEL =	4,545 VA @ 240V, 1Ø =	19 AMPS

1 ELECTRICAL PANEL SCHEDULE

SCALE: N/A

NEW WORK KEYNOTES:

1 PROVIDE CIRCUIT BREAKER, SIZED AS SHOWN.

2 REPLACE CIRCUIT BREAKER, SIZED AS SHOWN.

PANEL: B — EXISTING

LOCATION : MECHANICAL ROOM
FLOOR : 1ST
MOUNTING : SURFACE

VOLTAGE/ PHASE : 208Y/120V, 3Ø,4W
BUS AMPS :
MAIN BREAKER : 100A

FED FROM :
MINIMUM BUS BRACING :

	LOADS	OUTLETS LTG	OUTLETS REC	OUTLETS MISC	VOLT-AMPS A	VOLT-AMPS B	VOLT-AMPS C	CKT	BKR/ POLE	A	B	C	BKR/ POLE	CKT	VOLT-AMPS A	VOLT-AMPS B	VOLT-AMPS C	OUTLETS LTG	OUTLETS REC	OUTLETS MISC	LOADS	
								1						2	1,86							
	(E) MAIN BREAKER							3	100/3				20/3	4		1,861					(N) 4-TON AC	1
								5						6			1,861					
2	(N) 4-TON AC				1,861			7						8							SPACE	
						1,861		9	20/3					10							SPACE	
							1,861	11						12							SPACE	
	SPACE							13						14	1,86							
	SPACE							15					20/3	16		1,861					(N) 4-TON AC	2
	SPACE							17						18			1,861					
	SPACE							19						20							SPACE	
	SPACE							21						22							SPACE	
	SPACE							23						24							SPACE	
	SPACE							25						26							SPACE	
	SPACE							27						28							SPACE	
	SPACE							29						30							SPACE	

NOTES:

TOTAL 0A =	5,583 VOLT-AMPS	47 AMPS
TOTAL 0B =	5,583 VOLT-AMPS	47 AMPS
TOTAL 0C =	5,583 VOLT-AMPS	47 AMPS
LCL x 0.25 =	4,167 VOLT-AMPS	5 AMPS
LML x 0.25 =	0 VOLT-AMPS	0 AMPS
TOTAL PANEL =	20,936 VA @ 208V, 3Ø =	58 AMPS

2 ELECTRICAL PANEL SCHEDULE

SCALE: N/A

NEW WORK KEYNOTES:

1 PROVIDE CIRCUIT BREAKER, SIZED AS SHOWN.

2 REPLACE CIRCUIT BREAKER, SIZED AS SHOWN.

S&K CONSULTING SERVICES
2233 Via Fernandez
Palos Verdes Est, CA 90274
p. (310) 494-6910
w. www.skcsi.com

JCCA J.C. CHANG & ASSOCIATES, INC.
ENGINEERS • ARCHITECTS • PLANNERS
385 VAN NESS AVENUE, SUITE 208
TORRANCE, CALIFORNIA 90501
PH (310) 212-7644
FAX (310) 212-5272

JCCA #: 22980-1

Client

City of Rolling Hills
2 Portuguese Bend Rd
Rolling Hills, CA 90274

Project

ROLLING HILLS CITY HALL HVAC REPAIR

Address

2 PORTUGUESE BEND RD
ROLLING HILLS, CA 90274

Stamp

REGISTERED PROFESSIONAL ENGINEER — SHAHAB VAHDATI — No. E22793 Exp. 6/30/23 — ELECTRICAL — STATE OF CALIFORNIA

Approvals

Project No:	092226
Permit App No:	-
Project Phase:	Preliminary Design
Date:	10/20/2022
Drawn By:	DR
Checked By:	SA
Sheet Size:	24" x 36"

Revisions

No	Date	Description
1	-	-

Sheet Title

ELECTRICAL PANEL SCHEDULE

Sheet No.

E0.02

DATE: 10/28/2022 4:55 PM
FILE: C:\Users\dchang\Desktop\RHE - S&K\PROJECTS\2226 - CRH CITY HALL HVAC REPLACEMENT\LAYOUT ELECTRICAL\E0.02 ELECTRICAL PANEL SCHEDULE.DWG

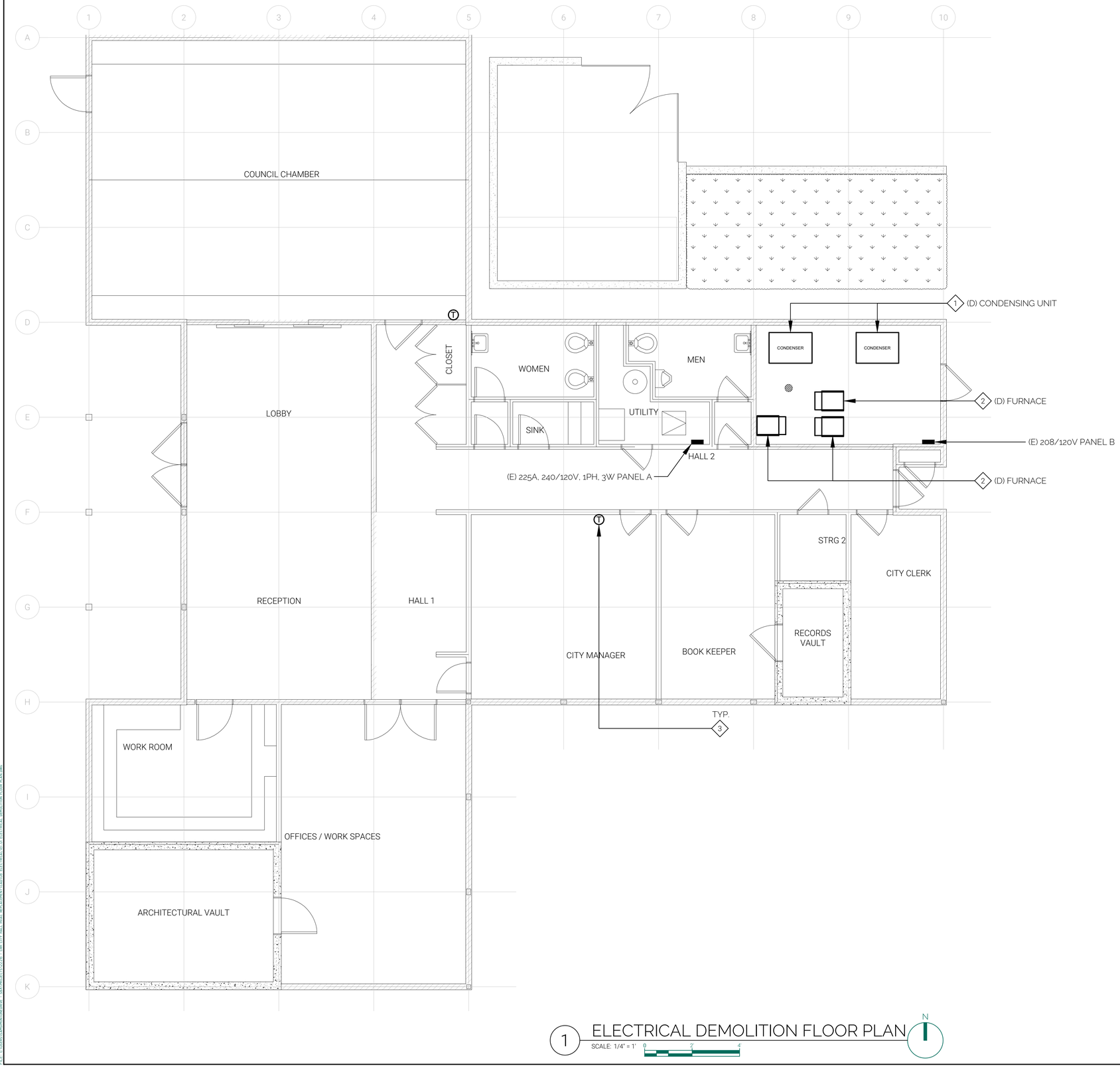

1 ELECTRICAL DEMOLITION FLOOR PLAN

SCALE: 1/4" = 1' 0 2 4

N

DEMOLITION KEYNOTES:

1. DISCONNECT ELECTRICAL POWER AND CONTROL PROVISIONS FOR RHEEM AIR CONDITIONING UNIT AND MAKE READY FOR REMOVAL.
2. DISCONNECT ELECTRICAL POWER AND CONTROL PROVISIONS FOR RHEEM GAS FURNACE AND MAKE READY FOR REMOVAL.
3. DEMOLISH ELECTRICAL POWER AND CONTROLS FOR THERMOSTAT.

GENERAL NOTES:

1. CAREFULLY COORDINATE SCOPE OF WORK WITH ALL DISCIPLINES, WITH PARTICULAR ATTENTION TO MECHANICAL DRAWINGS. IN PARTICULAR, CAREFULLY REVIEW EQUIPMENT SCHEDULES TO COORDINATE ELECTRICAL CHARACTERISTICS, INCLUDING VOLTAGE, MINIMUM CIRCUIT AMPACITY (MCA), AND MAXIMUM OVERCURRENT PROTECTION (MOCP). CONFIRM DISCONNECT SWITCH AND STARTING MEANS ARE PROVIDED BY THE MECHANICAL UNIT MANUFACTURER AND MAKE ADJUSTMENTS BASED ON FIELD CONDITIONS FOR FINAL CONNECTIONS.
2. CIRCUITS HAVE BEEN SHOWN BASED ON BEST AVAILABLE INFORMATION. CONTRACTOR IS RESPONSIBLE FOR FIELD VERIFYING ALL CIRCUITS WITHIN THE SCOPE OF WORK AND UPDATING SCHEDULES ACCORDINGLY.
3. REMOVE ALL FEEDERS BACK TO SOURCE PANEL AND CLEARLY MARK AS SPARE.

S&K CONSULTING SERVICES
2233 Via Fernandez
Palos Verdes Est, CA 90274
p. (310) 494-6910
w. www.skcsi.com

JCCA J.C. CHANG & ASSOCIATES, INC.
ENGINEERS • ARCHITECTS • PLANNERS
385 VAN NESS AVENUE, SUITE 208
TORRANCE, CALIFORNIA 90501
PH (310) 212-7644
FAX (310) 212-5272

JCCA #: 22980-1

Client

City of Rolling Hills
2 Portuguese Bend Rd
Rolling Hills, CA 90274

Project

ROLLING HILLS CITY HALL HVAC REPAIR

Address

2 PORTUGUESE BEND RD
ROLLING HILLS, CA 90274

Stamp

REGISTERED PROFESSIONAL ENGINEER
SHAHAB VAHDATI
No. E22793
Exp. 6/30/23
ELECTRICAL
STATE OF CALIFORNIA

Approvals

Project No:	092226
Permit App No:	-
Project Phase:	Preliminary Design
Date:	10/20/2022
Drawn By:	DR
Checked By:	SA
Sheet Size:	24" x 36"

Revisions

No	Date	Description
1	-	-

Sheet Title

ELECTRICAL DEMOLITION FLOOR PLAN

Sheet No.

E1.01

DATE: 10/19/2022 4:35 PM
FILE: C:\USERS\SHAHAB\DROPBOX (S&K)\PROJECTS\22980 - CRH CITY HALL HVAC REPLACEMENT\22980 ELECTRICAL\01.01 ELECTRICAL DEMOLITION FLOOR PLAN.DWG

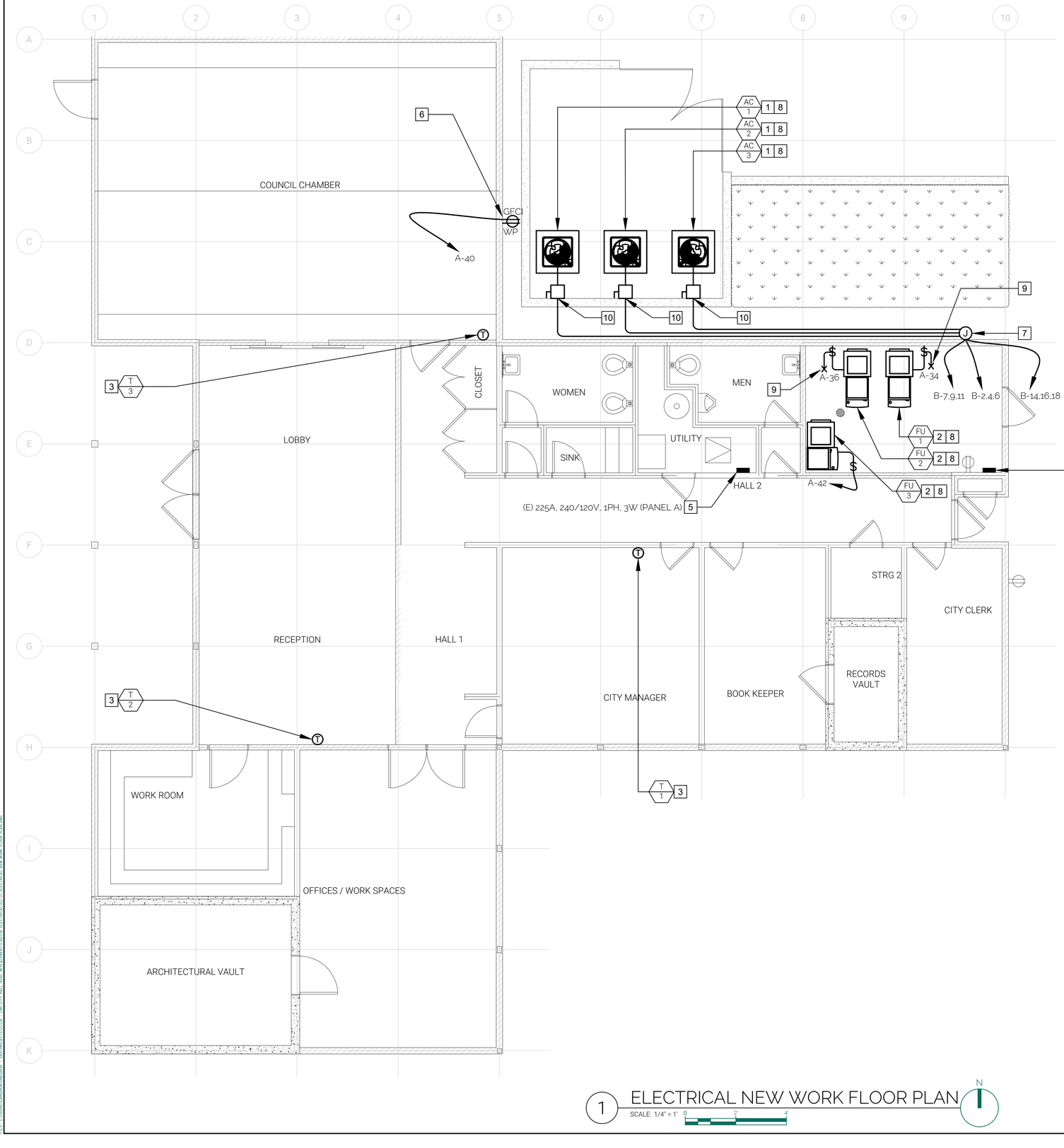

1 ELECTRICAL NEW WORK FLOOR PLAN

SCALE: 1/4" = 1' 0 2 4

N

NEW WORK KEYNOTES:

1. PROVIDE 3/4"C-3#12 + 1#12G TO EACH AIR CONDITIONING UNIT.
2. PROVIDE 3/4"C-2#12 + 1#12G TO EACH FURNACE.
3. PROVIDE 3/4"C WITH CONTROL WIRING BETWEEN (N) THERMOSTAT AND ASSOCIATED MECHANICAL UNITS. COORDINATE WITH MECHANICAL.
4. PROVIDE (3) 20A, 3P CIRCUIT BREAKERS (FOR EACH AIR CONDITIONING UNIT).
5. PROVIDE (3) 15A, 1P CIRCUIT BREAKERS (FOR EACH FURNACE). SEE E0.2 FOR PANEL SCHEDULES.
6. PROVIDE WATERPROOF, GFCI, NEMA 5-15R CONVENIENCE RECEPTACLE. SEE E0.2 FOR PANEL SCHEDULES.
7. PROVIDE WALL-MOUNTED NEMA 3R PULLBOX, SIZED PER CEC. PENETRATE EXTERIOR WALL, SEAL TO MAINTAIN WATERTIGHT CONDITION. CONTINUE RUNNING FEEDER INSIDE BUILDING.
8. PROVIDE 3/4"C WITH CONTROL WIRING BETWEEN (N) AIR CONDITIONING UNIT AND (N) FURNACE.
9. INTERCEPT AND EXTEND EXISTING BRANCH CIRCUIT SERVING (E) FURNACE TO (N) FURNACE.
10. PROVIDE UNFUSED, 30A, 240V, 3-POLE HEAVY DUTY DISCONNECT SWITCH IN NEMA-3R ENCLOSURE.

GENERAL NOTES:

1. CAREFULLY COORDINATE SCOPE OF WORK WITH ALL DISCIPLINES, WITH PARTICULAR ATTENTION TO MECHANICAL DRAWINGS. IN PARTICULAR, CAREFULLY REVIEW EQUIPMENT SCHEDULES TO COORDINATE ELECTRICAL CHARACTERISTICS, INCLUDING VOLTAGE, MINIMUM CIRCUIT AMPACITY (MCA), AND MAXIMUM OVERCURRENT PROTECTION (MOCP). CONFIRM DISCONNECT SWITCH AND STARTING MEANS ARE PROVIDED BY THE MECHANICAL UNIT MANUFACTURER AND MAKE ADJUSTMENTS BASED ON FIELD CONDITIONS FOR FINAL CONNECTIONS.
2. CIRCUITS HAVE BEEN SHOWN BASED ON BEST AVAILABLE INFORMATION. CONTRACTOR IS RESPONSIBLE FOR FIELD VERIFYING ALL CIRCUITS WITHIN THE SCOPE OF WORK AND UPDATING SCHEDULES ACCORDINGLY.

S&K CONSULTING SERVICES
2233 Via Fernandez
Palos Verdes Est, CA 90274
p. (310) 494-6910
w. www.skcsi.com

JCCA J.C. CHANG & ASSOCIATES, INC.
ENGINEERS • ARCHITECTS • PLANNERS
385 VAN NESS AVENUE, SUITE 208
TORRANCE, CALIFORNIA 90501
PH (310) 212-7644
FAX (310) 212-5272
JCCA #: 22980-1

Client

City of Rolling Hills
2 Portuguese Bend Rd
Rolling Hills, CA 90274

Project

ROLLING HILLS CITY HALL HVAC REPAIR

Address

2 PORTUGUESE BEND RD
ROLLING HILLS, CA 90274

Stamp

REGISTERED PROFESSIONAL ENGINEER
SHAG KEVANSHAH
No. E22793
Exp. 6/30/23
ELECTRICAL
STATE OF CALIFORNIA

Approvals

Project No:	092226
Permit App No:	-
Project Phase:	Preliminary Design
Date:	10/20/2022
Drawn By:	DR
Checked By:	SA
Sheet Size:	24" x 36"

Revisions

No	Date	Description
1	-	-

Sheet Title

ELECTRICAL NEW WORK FLOOR PLAN

Sheet No.

E2.01

DATE: 10/19/2022 4:35 PM
FILE: C:\USERS\DAVID\DESKTOP\JCCA\PROJECTS\22276 - CRH CITY HALL HVAC REPLACEMENT\LA\01 ELECTRICAL\LAYZ.01 ELECTRICAL NEW WORK FLOOR PLAN.DWG

SYSTEM NO. C-AJ-1597

ASNI/UL1479 (ASTM E814)
F RATINGS -- 3 HR
T RATING -- 2 AND 2-3/4 HR (SEE ITEM 3C)
L RATING AT AMBIENT -- LESS THAN 1 CFM/SQ FT
L RATING AT 400° F -- LESS THAN 1 CFM/SQ FT
W RATING -- CLASS 1 (SEE ITEM 3)

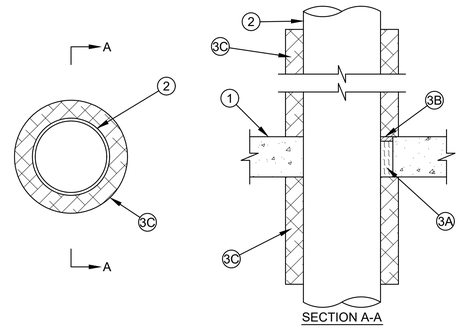

SECTION A-A

1. FLOOR OR WALL ASSEMBLY — MIN 4-1/2 IN. THICK REINFORCED LIGHTWEIGHT OR NORMAL WEIGHT (100-150 PCF OR 1600-2400 KG/M3) CONCRETE. WALL MAY ALSO BE CONSTRUCTED OF ANY UL CLASSIFIED CONCRETE BLOCKS*. FLOOR MAY ALSO BE CONSTRUCTED OF ANY UL CLASSIFIED PRECAST CONCRETE UNITS*. MAX DIAM OF OPENING 10 IN. MAX DIAM OF OPENING IN FLOOR CONSTRUCTED OF HOLLOW-CORE PRECAST CONCRETE UNITS IS 7 IN.
   SEE CONCRETE BLOCKS (CAZT) AND PRECAST CONCRETE UNITS (CFTV) CATEGORIES IN FIRE RESISTANCE DIRECTORY FOR NAMES OF MANUFACTURERS.
2. THROUGH-PENETRANT — ONE METALLIC PIPE, CONDUIT OR TUBING INSTALLED CONCENTRICALLY OR ECCENTRICALLY WITHIN OPENING. ANNULAR SPACE BETWEEN PENETRANT AND PERIPHERY OF OPENING SHALL BE MIN 0 IN. (POINT CONTACT) TO MAX 2 IN. PENETRANT TO BE RIGIDLY SUPPORTED ON BOTH SIDES OF FLOOR OR WALL ASSEMBLY. THE FOLLOWING TYPES AND SIZES OF PENETRANTS MAY BE USED:
   A. STEEL PIPE — NOM 8 IN. DIAM (OR SMALLER) SCHEDULE 10 (OR HEAVIER) STEEL PIPE.
   B. IRON PIPE — NOM 8 IN. DIAM (OR SMALLER) CAST OR DUCTILE IRON PIPE.
   C. COPPER TUBING — NOM 4 IN. DIAM (OR SMALLER) TYPE L (OR HEAVIER) COPPER TUBING.
   D. COPPER PIPE — NOM 4 IN. DIAM (OR SMALLER) REGULAR (OR HEAVIER) COPPER PIPE.
   E. CONDUIT — NOM 6 IN. DIAM (OR SMALLER) STEEL CONDUIT OR NOM 4 IN. DIAM (OR SMALLER) STEEL ELECTRICAL METALLIC TUBING (EMT).
3. FIRESTOP SYSTEM — THE DETAILS OF THE FIRESTOP SYSTEM SHALL BE AS FOLLOWS:
   A. PACKING MATERIAL — MIN 4 IN. THICKNESS OF MIN 4 PCF MINERAL WOOL BATT INSULATION FIRMLY PACKED INTO OPENING AS A PERMANENT FORM. IN FLOORS CONSTRUCTED OF PRECAST CONCRETE UNITS, PACKING MATERIAL TO BE FLUSH WITH BOTTOM OF FLOOR. PACKING MATERIAL TO BE RECESSED FROM TOP SURFACE OF FLOOR OR FROM BOTH SURFACES OF WALL TO ACCOMMODATE THE REQUIRED THICKNESS OF FILL MATERIAL.
   B. FILL, VOID OR CAVITY MATERIALS* — SEALANT — MIN 1/2 IN. THICKNESS OF SEALANT OR PUTTY APPLIED WITHIN THE ANNULUS, FLUSH WITH TOP SURFACE OF FLOOR OR WITH BOTH SURFACES OF WALL. AT POINT CONTACT, APPLY MIN 1/4 IN. BEAD AT PENETRANT/CONCRETE INTERFACE ON TOP SURFACE OF FLOOR OR BOTH SURFACES OF WALL. W RATING APPLIES ONLY WHEN CFS-S SIL GG, CFS-S SIL SL (FLOORS ONLY), CP601S SEALANT OR FS-ONE MAX INTUMESCENT SEALANT IS USED. HILTI CONSTRUCTION CHEMICALS, DIV OF HILTI INC — FS-ONE INTUMESCENT SEALANT, FS-ONE MAX INTUMESCENT SEALANT, CFS-S SIL GG SEALANT, CFS-S SIL SL SEALANT (FLOORS ONLY)
   C. DUCT WRAP MATERIALS* — NOM 1-1/2 IN. OR 2 IN. THICK BLANKET, FACED ON ONE SIDE OR TWO WITH A FOIL FACING. THE PIPES SHALL BE WRAPPED WITH ONE LAYER OF DUCT WRAP. DUCT WRAP IS TO EXTEND A MINIMUM OF 36 IN. FROM TOP SURFACE OF FLOOR OR BOTH SIDES OF WALL ASSEMBLY AND A MIN OF 12 IN. FROM THE BOTTOM OF THE FLOOR. THE ENDS ARE TO BE TIGHTLY BUTTED TOGETHER AND TAPED ON TOP SIDE OF FLOOR AND BOTH SIDES OF WALL. THE EXPOSED EDGES OF THE FACED BLANKETS ARE TAPED WITH 4 IN. WIDE PRESSURE-SENSITIVE ALUMINUM FOIL TAPE. ON THE BOTTOM SURFACE OF THE FLOOR ENDS ARE TO BE TIGHTLY BUTTED TOGETHER AND WIRE BOUND. THE T, FT AND FTH RATINGS ARE 2 HR WHEN NOM 1-1/2 IN. THICK BLANKET IS USED. THE T, FT AND FTH RATINGS ARE 2 3/4 HR WHEN NOM 2 IN. THICK BLANKET IS USED.
   THERMAL CERAMICS INC — FIREMASTER FASTWRAP XL
   UNIFRAX I L L C — FYREWRAP DUCT INSULATION, FYREWRAP DUCT 1.5 INSULATION
* INDICATES SUCH PRODUCTS SHALL BEAR THE UL CERTIFICATION MARK.

1 FIRE STOP DETAILS
NOT TO SCALE

S&K CONSULTING SERVICES
2233 Via Fernandez
Palos Verdes Est, CA 90274
p. (310) 494-6910
w. www.skcsi.com

JCCA J.C. CHANG & ASSOCIATES, INC.
ENGINEERS • ARCHITECTS • PLANNERS
385 VAN NESS AVENUE, SUITE 208
TORRANCE, CALIFORNIA 90501
PH (310) 212-7644
FAX (310) 212-5272

JCCA #: 22980-1

Client

City of Rolling Hills
2 Portuguese Bend Rd
Rolling Hills, CA 90274

Project

ROLLING HILLS CITY HALL HVAC REPAIR

Address

2 PORTUGUESE BEND RD
ROLLING HILLS, CA 90274

Stamp

REGISTERED PROFESSIONAL ENGINEER
SEAG KVANSOMPHONE
No. E22793
Exp. 6/30/23
ELECTRICAL
STATE OF CALIFORNIA

Approvals

Project No:	092226
Permit App No:	-
Project Phase:	Preliminary Design
Date:	10/20/2022
Drawn By:	DR
Checked By:	SA
Sheet Size:	24" x 36"

Revisions

No	Date	Description
1	-	-

Sheet Title

ELECTRICAL DETAILS

Sheet No.

E4.01

DATE: 12/20/2022 4:35 PM
FILE: C:\Users\dreyes\Documents - S&K\Projects\2226 - ORH CITY HALL HVAC REPLACEMENT\LAYOUT ELECTRICAL\SA_D ELECTRICAL DETAILS.DWG

City of Rolling Hills INCORPORATED JANUARY 24, 1957

Agenda Item No.: 11.B
Mtg. Date: 01/09/2023

TO: **HONORABLE MAYOR AND MEMBERS OF THE CITY COUNCIL**

FROM: **VANESSA HEVENER, SENIOR MANAGEMENT ANALYST**

THRU: **ELAINE JENG P.E., CITY MANAGER**

SUBJECT: **RECEIVE AND FILE AN UPDATE TO THE OUTDOOR SIREN PROJECT**

DATE: **January 09, 2023**

BACKGROUND:
In Fiscal Years 2019-2020 and 2020-2021, the City Council provided funding for the Block Captain Program to investigate communication platforms in the event of complete power failure in the community. The Block Captains and City staff used funds to purchase two-way radios and when the handheld radio option proved to be ineffective, a Request for Proposal (RFP) was issued in February 2021 to solicit proposals on other communication systems. The City received one proposal from HQE Systems, Inc. (HQE).

On April 26, 2021, Staff recommended that City Council engage the services of HQE. The City Council directed Councilmember Pieper to work with Staff to better understand the evolution of the communication project and the scope of the feasibility study. As directed, Staff met with Councilmember Pieper on four occasions: May 20, 2021, July 15, 2021, July 23, 2021 and August 12, 2021. Some of the meetings with Councilmember Pieper included the Lead Block Captains Arlene and Gene Honbo. Staff also worked with Project Manager Alan Palermo and HQE to provide technical information requested by Councilmember Pieper. The Lead Block Captains, along with members of the Block Captains were in support of a feasibility study. The City Council approved a Professional Services Agreement (PSA) with HQE to prepare a feasibility study that would identify the hardware, location of the hardware, software, system integration, and a detailed cost estimate to install a siren system for the community.

At the January 10, 2022, City Council meeting Staff presented the final Feasibility Study and recommended to City Council to conduct a community survey to gauge interest for an outdoor siren system. In review of the Feasibility Study, the City Council requested information relating to the annual maintenance cost of the proposed outdoor siren system. The City Council also requested a street level map of Solution A and Solution B presented in the Feasibility Study.

On March 14, 2022, the City Council unanimously voted to amend the PSA with HQE allocating an additional not to exceed $3,500 to investigate potential co-location sites of the poles. On June 16, 2022, HQE Staff and Block Captain Leads Arlene and Gene Honbo

conducted a site visit at the Main Gate, Crest Gate, Eastfield Gate and the Radar Station. In early July, HQE submitted the revised Feasibility Study that included two additional options: Solution C included the three gates and FAA Radar Station and Solution D included only the three gates.

At the August 8, 2022, City Council meeting, Staff presented potential site locations and to consider Solution D. HQE representatives were present to answer questions from Council and members of the public. HQE informed City Council that they had completed the remaining tasks of the Feasibility Study at no cost to the City, a savings of $22,814 and invited the Council to observe a demonstration of the proposed system, if desired. City Council directed Staff to seek approval from the Rolling Hills Community Association to place the siren poles at the three gate locations.

On September 1, 2022, Staff and Councilmember Mirsch attended a demonstration of the proposed outdoor siren system equipment at HQE headquarters. The demonstration included a tour of their facility where manufacturing of the equipment was conducted in-house and a demonstration simulated a test warning that would be sent out in case of an emergency. The equipment used consisted of a single 4' speaker mounted on a pole 25 feet above ground (for Rolling Hills, there would be 4-4' speakers mounted 50 feet above ground at each gate). The quality of the intelligible voice was clear and could be easily heard. The speakers could be adjusted to rotate a few degrees at a time through the use of a software application to ensure the best sound coverage.

In our discussion with HQE, it was conveyed that they were recently awarded a contract with the City of Paradise to install 21 poles and are in the process of installing them.

On September 1, 2022, Staff also attended the Rolling Hills Community Association (RHCA) Board meeting. Per Council direction, the City Manager asked that the RHCA Manager present to the Board of Directors the City's request to place the siren poles at the three gatehouse locations. During that meeting, the City's question was not presented as requested. As a result, the Board of Directors began asking questions with respect to public safety, an area outside the purview of the RHCA. The Board of Directors ultimately did not discuss the City's request to place siren poles at the three gates. Instead, the Board of Directors requested that the RHCA Manager meet with City Staff and that the RHCA Liaisons meet with the City Council Subcommittee to discuss why the Board of Directors were not informed of the project, if the project was warranted, and concerns relating to only having one proposer submit a proposal for the project.

In addition, per Council direction, Staff reached out to the five homes adjacent to the three gates to inform them of the project. Two residences were in support, one was opposed, and the other two did not respond.

At the September 12, 2022 City Council meeting, the City Council directed the Subcommittee members to follow up with their counterparts at RHCA. On September 15, 2022, Staff made a presentation at the Rolling Hills Community Association Board meeting requesting an approval to place the siren system at the three gates. The RHCA Board expressed concerns about the health of the guard attendants who would be exposed to high levels of sound emitting from the sirens, interference with the operations of the guardhouses, and aesthetics and noise impacts on residents. The RHCA Board ultimately voted to not support the the City's request of placing the siren system at the gates.

Following the RHCA Board meeting, Staff contacted HQE to seek additional information on noise levels that could be heard at the base of the poles. Based on HQE's response, the speakers will emit up to 124 decibels 50' above ground; however, at the base of the pole, the decibel is 90 or equivalent to a hairdryer. Included in the packet is additional information on sound prepared by HQE.

At the September 26, 2022 City Council meeting, the City Council directed Staff to do the following:

- seek input from the First Responders on usage scenarios when the siren system is deployed for evacuation and non-evacuation purposes and system with voice capability vs siren only
- obtain information on easement requirements from the Rolling Hills Community Association

Staff contacted Los Angeles County Fire Department Chief Bennett and Los Angeles County Sheriff's Department Captain Powers to seek their input on the proposed usage scenarios and whether siren only system or a system with siren tone and intelligible voice would be the preferred option. Based on feedback received from the First Responders, their preferred option is the combined siren tone and intelligible voice because it could provide information to residents that are comprehensible regardless of the scenario (e.g., shelter in Place or mandatory evacuation). Staff has also created a flow chart to activate the siren.

In addition, on September 28, 2022, Staff submitted a letter to the RHCA requesting easement requirements for siting of poles at locations identified in Solution A and Solution B in easements held by RHCA with a response date of October 6, 2022. It is important to note that RHCA staff was present when pole locations were identified in Solution A and Solution B.

At the October 6, 2022 RHCA Board meeting, the Board discussed the item and requested that the City follow these procedures:

1. Obtain permission from the owner of the property where the siren will be placed,
2. Submit a written request to the Board for a license(s) to use the Association easement for Board review and approval. The request should include:
    - Site plan with the location of the pole and any ground mounted equipment indicated,
    - Specifications of the height and size of the pole and any pole mounted equipment

Site plans should include property and easement lines, edge of pavement and property address. If the license is approved by the Board, the City would be responsible for legal and recording fees incurred for the license agreement(s). RHCA would waive fees for excavation permits.

Per Council direction, the pole locations are identified based on the "Outdoor Siren Location-Street Level" prepared by HQE:

Solution A - Proposed Pole Locations

- Siren A-1: On Blackwater Canyon Trail (behind 13 Portuguese Bend Rd) between Lower Blackwater Canyon Rd and Portuguese Bend Road
- Siren A-2: In front of 9 Upper Black Canyon Rd

- Siren A-3: In front of 57 Saddleback Rd
- Siren A-4: On Storm's Ridge Trail/Buggy Whip Trail (near 4 Storm Hill Ln)
- Siren A-5: In the canyon behind 4 Possum Ridge Road
- Siren A-6: Near 4 Poppy Trail
- Siren A-7: In the canyon behind 1 Hackamore Rd
- Siren A-8: Near 74 Portuguese Bend Rd
- Siren A-9: On Crest Rd East (near 63 Crest Road East)

Solution B- Proposed Pole Locations

- Siren B-1: On Pine Tree Lane (adjacent to 10 Pine Tree Ln)
- Siren B-2: Corner of Portuguese Bend Road and Fuld's Furlong Trail
- Siren B-3: In the canyon on Crest Road East (east of 38 Crest Road East)

Based on the discussion from the October 10, 2022 City Council meeting, Staff was directed to the do following:

- seek permission from CalWater to place 50' poles at their water facilities
- identify City properties where the poles could be placed

On October 19, 2022, Staff held a virtual meeting with CalWater representatives to discuss whether there is a possibility of installing poles in their three water facilities. CalWater representatives were open to the discussion and asked that the City provide additional information such as the specification of poles to be installed, length of access needed at their facilities, and any electronic equipment placed on poles. The requested information will assist CalWater to determine if the proposed poles would interfere with their current operations and/or any future planned activities at their sites. It may take up to the end of this year or early next year for CalWater to decide if their sites are viable options to install the poles.

HQE has been a generous partner with the City in providing additional information requested by Staff without receiving additional compensation. Given the new locations to investigate, it was necessary to obtain another proposal from HQE in order to conduct a site survey, perform a sound propagation analysis, provide systems option and cost to provide technical support to third-party entities. HQE submitted a proposal in the amount of $6,095 to evaluate up to four sites and correspond directly with CalWater on behalf of the City on technical matters.

At the October 24, 2022 City Council meeting, the City Council directed staff to engage the services of HQE to provide technical support in conversations with CalWater for $1,900.

To keep the community informed of the outdoor siren project, the City published a Special Blue Newsletter on October 27, 2022 identifying the proposed ten sites with the disclaimer that the final locations were not confirmed.

On October 28, 2022, Staff, HQE, and CalWater representatives held a follow-up meeting to discuss the proposed locations, specification of poles to be installed, length of access needed at their facilities, and any electronic equipment placed on poles. During the meeting, CalWater eliminated the following facilities for consideration due to space constraints: CalWater Reservoir #12, 23 Portuguese Bend (Water Tank Trail/Black Water Cayon/Tallyhand Rd), CalWater on Sunnyridge Rd in unincorporated LA County and tentatively allowed the possibility of installations of poles at the CalWater Reservoir #22 on Spur Lane and at 3960 Crest Road upon further review by various CalWater departments. On November 1, 2022, with

assistance from HQE, Staff submitted the requested document to CalWater for their review. Staff anticipates to receive a response from CalWater in the next two weeks to determine if any follow-up steps are warranted.

Subsequent to that meeting, the City published another Special Blue Newsletter on November 3, 2022, updating the residents of promising news in which CalWater had tentatively allowed two facilities as possible sites for the installation of siren poles. Following that publication, Mr. Frederick Lorig submitted an email on November 7, 2022 to Staff and the City Council to express his concerns.

At the November 14, 2022 City Council meeting, the City Council directed Staff to eliminate the CalWater facility on Spur Lane and look into two other locations: Fire Station 56 and Rancho del Mar High School, located at 12 and 38 Crest Road West.

On December 5, 2022, Staff, HQE and representatives from CalWater, Los Angeles County Fire Department, and Palos Verdes Peninsula Unified School District conducted separate consultation visits at the three proposed sites to assess the properties and answer questions from the respective agencies. All three agencies were in support of having the poles placed at their properties and were open to assisting the City with its outdoor siren project.

DISCUSSION:
At the December 13, 2022 City Council meeting, the City Council directed Staff to send out a Blue Newsletter with one side using a simplified map with the eight proposed locations and the other side with photos depicting the siren system. In addition, the Blue Newsletter should also indicate that the City Council is soliciting feedback and that this item will continue in January.

On December 22, 2022, Staff mailed the Special edition of the Blue Newsletter (attached) based on the City Council's direction. At the time of writing, the City received seven comments (attached). Due to the holiday season and to provide ample opportunity to comment on the outdoor siren project, an identical Special Blue Newsletter will be mailed on January 9, 2023 to solicit additional feedback from the community. Staff will present comments received at the January 23, 2023 City Council meeting for consideration of next steps.

FISCAL IMPACT:
There is no fiscal impact.

RECOMMENDATION:
Receive and file

ATTACHMENTS:
CL-AGN_230109_CC_22-12-21_SpecialNewsletter.pdf
CL-AGN_230109_CC_SBN Comments.pdf

City of Rolling Hills Newsletter

office: (310) 377-1521 • fax: (310) 377-7288
www.Rolling-Hills.org

RESIDENTS INPUT NEEDED!

The City Council is seeking your input on the proposed outdoor siren project. Below is a map of the eight proposed siren locations that have been identified. The final locations have **NOT** been confirmed.

The outdoor siren project will be discussed at the next City Council meeting on January 9, 2023. Please attend the City Council meeting and/or send in your comments/concerns to Vanessa Hevener, Senior Management Analyst at vhevener@cityofrh.net.

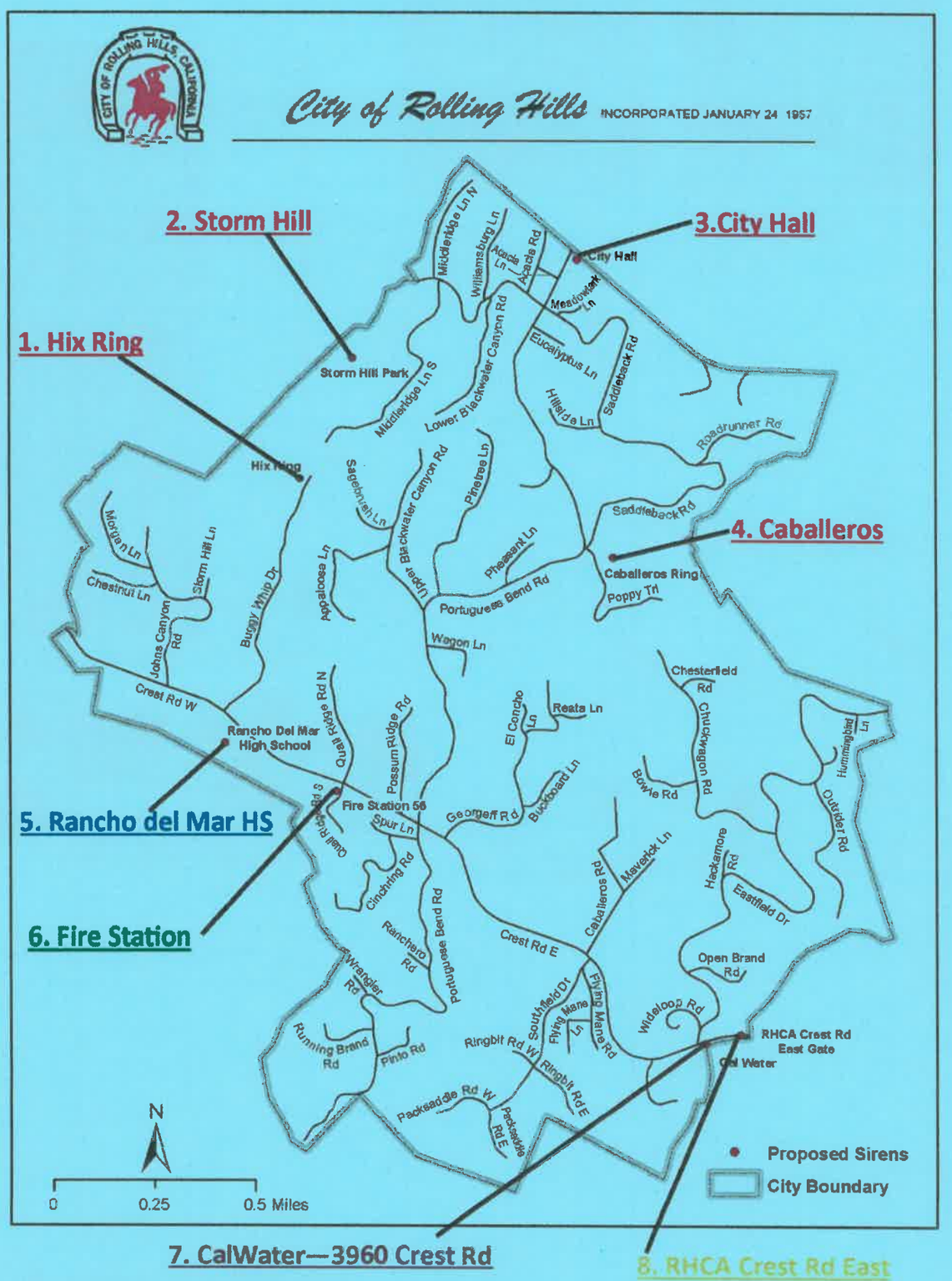

OUTDOOR SIREN SYSTEM

The siren system is comprised of two types of speakers: the siren tone plus intelligible voice or horn (siren tone only). They can be mounted on either a 30' or 50' pole. Tree facades are an option to cover and disguise the siren.

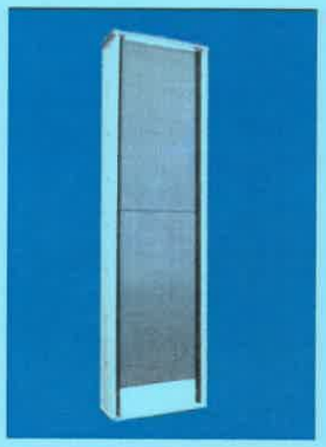

Siren tone + intelligible voice speaker

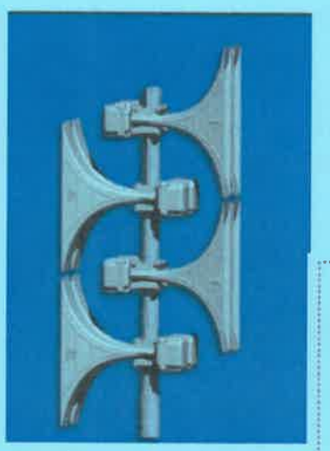

Horn (siren tone only)

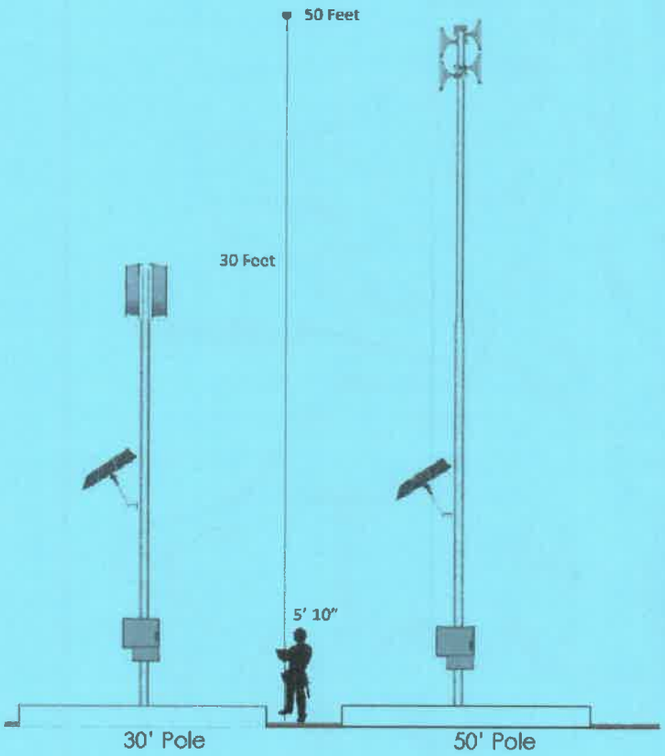

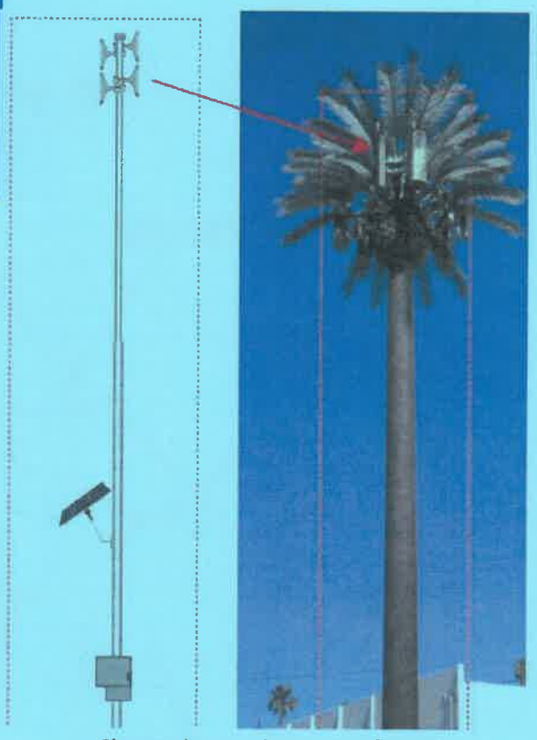

Siren poles can be camouflaged



Tree Façade Covering Options

City of Rolling Hills
2 Portuguese Bend Road
Rolling Hills, California 90274

Comments Received from Special Edision of Blue Newsletter dated December 22, 2022

	DATE	NAME	ADDRESS	COMMENT
1.	12/26/2022	Thomas Brodie	1 Hummingbird Ln	In looking at the proposed locations for the emergency warning sirens, it appears that an area of Lower (**Eastfield, Chuckwagon and Outrider**) would probably not be adequately covered. I am sure that considerable thought has gone into this matter. Am I missing something?
2.	12/26/2022	Allen Lay		Project seems marginally useful to me. Has staff fully explored the cost of maintenance and how often it would require a test to keep it operational. I suspect the siren project has a significant cost to install and maintain therefore I am reluctant to support it.
3.	12/26/2022	Pete Hazelrigg	33 Chuckwagon Rd	What the heck. There is nothing on what these might be good for. An earlier proposal for alert towers was rejected. Better that cell service capability be greatly improved. Since June, we have periods of no service and its sketchy otherwise at best. Though I understand this is a matter for RHCA.
4.	12/27/2022	Melissa McNabb		Per the Blue newsletter just received, I wanted to give you our feedback re: proposed siren locations. Dustin McNabb and I prefer the following 3 locations: A. Fire Station or Rancho Del Mar HS B. Caballeros Ring. C. RHCA Crest Rd East or CalWater 3960 Crest Rd. Additionally, we prefer 30' tall poles. We are split on siren only (Dustin) vs. siren plus voice capacity (Melissa)

	DATE	NAME	ADDRESS	COMMENT
				And we would prefer camouflage on the poles, IF they are in a normally visible area.
5.	12/28/2022	David S. Brown		Sirens? Are we going back to the fifties? What a waste. **What we need is cell service.** Then the authorities can communicate proper emergency messages, rather than just blaring obnoxious noise from speakers on towers. We can also call 911 if needed. Let's get into the nineties! The obsolete sirens will require periodic testing, unnecessarily bothering residents, perhaps unnecessarily alarming them. Just get us the cell service we need!
6.	12/30/2022	Sue and Dave Breiholz		Dear Rolling Hills City Council, We feel the siren project would be a mistake for our city to pursue because of the following concerns: 1) The nuisance of noise to the quiet nature of the area from routine testing heard by Rolling Hills residents and the neighboring cities. 2) An alert system could be provided by good cell phone coverage. The money and energy would be better spent to create adequate cell service for our entire city. Good cell service would provide residents access to emergency services and notifications at all times.

	DATE	NAME	ADDRESS	COMMENT
7.	12/31/2022	Lisa L. Hancock		My concerns are spending money on this unnecessary siren system. Rolling Hills is very small. I would notice if there was an earthquake or power outage without a fancy siren. Why are we doing this? I would feel safer if our cell coverage was better. And why are the sirens all clustered so close together with none down by the old Crest Road Gate? If we have so much money to spend, surely there are better uses than sirens???

City of Rolling Hills INCORPORATED JANUARY 24, 1957

Agenda Item No.: 12.A
Mtg. Date: 01/09/2023

TO: **HONORABLE MAYOR AND MEMBERS OF THE CITY COUNCIL**

FROM: **ROBERT SAMARIO, FINANCE DIRECTOR**

THRU: **ELAINE JENG P.E., CITY MANAGER**

SUBJECT: **PROPOSED FISCAL YEAR 2023/24 BUDGET CALENDAR**

DATE: **January 09, 2023**

BACKGROUND:
Each year staff develops a proposed budget calendar for City Council's review and approval. The budget calendar includes all of the key actions and dates directly or indirectly related to the development of next year's budget, which is effective on July 1.

The proposed budget calendar related to the development of the fiscal year 2023/24 budget is attached to this report.

DISCUSSION:
The development of the fiscal year 2023/24 begins in earnest in January of each year. During this time, staff begins to develop revenue projections for the current year that become the starting point for next year's revenue estimates. This is an important first step since it establishes the revenues that will be available in the next year and, thus, to what degree the City's General Fund is balanced or unbalanced.

In February 2023, staff will bring to the City Council the mid-year report providing a status of both revenues and expenditures versus budgeted amounts. In addition, this is the first formal look at preliminary projections for the year which will establish a starting point for developing initial FY 2023/24 revenue estimates.

Later, in March, staff will bring to the Council the latest revenue projections for FY 2023/24 and a preliminary balancing strategy using existing baseline expenditures. At this time, staff will be seeking Council direction with respect to the proposed balancing strategy. In addition, staff will be seeking direction from Council regarding whether the City will be pursuing an increase to refuse rates.

During March and April, based on Council's direction, staff will work on developing the proposed budget for all funds and departments.

Then, over the course of three budget workshops starting in late April, staff will present the entirety of the proposed budget to Council for their consideration and feedback. The workshops will be held on Wednesday on April 19, May 3, and May 17. This will allow Council, staff, and the public to devote focused attention to the proposed budget. During these workshops, members of the public will have an opportunity to comment and provide input into the budget process.

On June 12, we will hold a public hearing, if needed, for the public to provide any protests regarding any proposed increases to refuse rates pursuant to Proposition 218. Staff will also seek any final directions from Council regarding the proposed budget scheduled for adoption on June 26, 2022.

FISCAL IMPACT:
None.

RECOMMENDATION:
Review and approve the proposed budget calendar for the development of the fiscal year 2023/24 budget.

ATTACHMENTS:
FN_BUD_230109_Calendar_FY23-24.pdf

City of Rolling Hills INCORPORATED JANUARY 24, 1957

NO. 2 PORTUGUESE BEND ROAD
ROLLING HILLS, CA 90274
(310) 377-1521
FAX (310) 377-7288

PROPOSED BUDGET CALENDAR
FISCAL YEAR 2023/2024

January 9, 2023		City Council receive, review and approve FY 2022/2023 budget calendar.
January 23, 2023		Finance/Budget/Audit Committee meeting with Auditor to review FY 2021/2022 Annual Financial Report.
January 23, 2023		City Council receive and review FY 2021/2022 Audited Financial Statements.
February 13, 2023		City Council receive and review FY 2022/2023 mid-year budget report showing the status of revenues and expenditures against budgeted amounts, including preliminary projections for the year.
February 20, 2023		Staff review of FY 2022/23 year-end revenues and expenditure projections with City Manager.
February 27, 2023		Finance/Budget/Audit Committee review of Financial and Investment Policies; and review and discuss Schedule of Fees and Charges
March 13, 2023		City Council review of FY 2022/2023 year-end revenue projections, preliminary FY 2023/24 revenue projections, and confirmation of FY 2023/24 preliminary balancing strategy including direction on solid waste fee increase.
March and April		City staff develop proposed FY 2023/24 budget.
March 24, 2023		If the solid waste collection fees are going to be increased by CPI, public notice sent to all property owners advertising a public hearing for an increase in the solid waste collection fee. Also, as directed, public notice is required for updates to Schedule of Fees & Charges (by June 12, 2023).
April 19, 2023		**Special Meeting #1** – City Council budget workshop – Presentation of FY 2023/24 Proposed General Fund Revenue Projections and Balancing Strategies.

City of Rolling Hills INCORPORATED JANUARY 24, 1957

NO. 2 PORTUGUESE BEND ROAD
ROLLING HILLS, CA 90274
(310) 377-1521
FAX (310) 377-7288

May 3, 2023		**Special Meeting #2 -** City Council budget workshop – Presentation of FY 2023/24 Proposed General Fund Expenditures by Department.
May 17, 2023		**Special Meeting #3 -** City Council budget workshop - Presentation of Proposed Budgets for Special Revenue, Capital Improvement, and Refuse Fund Budgets.
June 12, 2023		Prop 218 Hearing on Proposed FY 2023/24 Solid Waste Rate Increase (if needed); and final directions from Council to staff on proposed FY 2023/24 budget.
June 26, 2023		Budget Adoption

City of Rolling Hills INCORPORATED JANUARY 24, 1957

Agenda Item No.: 12.B
Mtg. Date: 01/09/2023

TO: **HONORABLE MAYOR AND MEMBERS OF THE CITY COUNCIL**

FROM: **JOHN SIGNO, DIRECTOR OF PLANNING & COMMUNITY SERVICES**

THRU: **ELAINE JENG P.E., CITY MANAGER**

SUBJECT: **CONSIDER ENGAGING 4LEAF, INC. TO PROVIDE CODE ENFORCEMENT SERVICES, AND DIRECT STAFF TO EXECUTE A PROFESSIONAL SERVICES AGREEMENT FOR AN AMOUNT NOT-TO-EXCEED $87,880 FOR ONE CALENDAR YEAR INCLUDING $68,380 FOR THE REMAINDER OF THE 2022-2023 FISCAL YEAR**

DATE: **January 09, 2023**

BACKGROUND:
On February 28, 2022, the City entered into an agreement for code enforcement services with Willdan Group, Inc. (Willdan). The agreement was amended in July 2022 to cover the 2022-2023 fiscal year. Willdan's code enforcement officers are professional and respectful of our residents. However, there has been a turnover of officers requiring retraining and delays in responses to cases. As such, the contract with Willdan was terminated on December 31, 2022.

DISCUSSION:
4LEAF, Inc. submitted a proposal in February 2022 to provide code enforcement services but was not selected. 4LEAF, Inc. is still interested in serving the City and has code enforcement officers available. Staff has emphasized the importance in providing an officer who can commit long-term and who is familiar with dead vegetation and weed abatement. The expectation is for a code enforcement officer to be available twice a week for 16 hours. Typically, the code enforcement officer will report to City Hall in the morning to handle paperwork and make phone calls. The officer would conduct field visits in the middle of the day and would return to the office in the afternoon for follow-up paperwork and phone calls.

The draft agreement attached to this staff report includes a clause that the consultant shall use best efforts to provide the same Code Compliance staff to the City to ensure operational consistency. If two staffing changes occur in any one-year period, 4LEAF, Inc. will be required to provide a written memorandum explaining the circumstances resulting in the turnover and provide the City with an action plan that ensures consistency. In addition, 4LEAF, Inc. shall provide a new officer to the City and incur the costs for proper on-boarding and training. Although there are no guarantees that turnover will not occur, this would provide an incentive

for 4LEAF, Inc. to have committed staffing and gives the City leverage to renegotiate or terminate the agreement.

FISCAL IMPACT:
The 2022-2023 FY budget allocates $87,880 for contract code enforcement services. Willdan's final invoice has not yet been received but is estimated to total $19,500 for the first six months of the fiscal year (July 1, 2022 to December 31, 2022). This leaves the remaining balance at $68,380 for the remainder of the 2022-2023 fiscal year, which is adequate to cover 4LEAF's services of $105 per hour for 16 hours a week for the remainder of the fiscal year. Additionally, assuming the budget remains the same for the 2023-2024 FY, it will be adequate to provide an officer 16 hours a week for the entire fiscal year.

RECOMMENDATION:
Direct the City Manager to execute a Professional Services Agreement with 4LEAF, Inc. for code enforcement services.

ATTACHMENTS:
CA_AGR_4Leaf_On_Call_CE PSA-c1_DRAFT-c1.pdf
PL_CON_20221128_CE_4LEAF_SOQ_without_appendix.pdf
PL_CON_4LEAF_FeeSchedule22_23.pdf

AGREEMENT FOR PROFESSIONAL SERVICES

CODE ENFORCEMENT SERVICES

This Agreement is made and entered into by and between the City of Rolling Hills (hereinafter referred to as the "City"), and 4Leaf, Inc. a California Corporation (hereinafter referred to as "Consultant").

RECITALS

A. The City does not have the personnel able and available to perform the services required under this Agreement.

B. The City desires to contract for consulting services for certain projects relating to code enforcement.

C. The Consultant warrants to the City that it has the qualifications, experience, and facilities to perform properly and timely the services under this Agreement.

NOW, THEREFORE, the City and the Consultant agree as follows:

1.0 SCOPE OF THE CONSULTANT'S SERVICES. The Consultant agrees to provide the services and perform the tasks set forth in the Scope of Work, attached to and made part of this Agreement as Exhibit A, except that, to the extent that any provision in Exhibit A conflicts with this Agreement, the provisions of this Agreement shall govern. The Scope of Work may be amended from time to time in writing and signed by both parties by way of written amendment to this Agreement.

2.0 TERM OF AGREEMENT. This Agreement will become effective upon execution by both parties and will remain in effect for a period of one year from said date. At its sole discretion, the City shall have the option to extend this Agreement for two, one-year terms provided that the City gives Consultant notice of the extension prior to the end date of the Agreement. This Agreement may also be expressly extended and agreed to by both parties or terminated by either party as provided herein.

3.0 CITY AGENT. The City Manager, or her designee, for the purposes of this Agreement, is the agent for the City; whenever approval or authorization is required, Consultant understands that the City Manager, or her designee, has the authority to provide that approval or authorization.

4.0 COMPENSATION FOR SERVICES. The City shall pay the Consultant for its professional services rendered and costs incurred pursuant to this Agreement in accordance with Exhibit B, the Scope of Work's fee and cost schedule for the services attached to and made part of this Agreement subject to a do not exceed amount in the amount of $87,880/year. No additional compensation shall be paid for any other expenses incurred, unless first approved by the City Manager, or her designee. Further, in the event that staff provided to the City from Consultant changes twice in any six month period (*i.e.,* a third new staff member from Consultant is assigned

DRAFT

to the City within a six month period), Consultant shall provide this staff member to the City for 32 hours without any cost to the City so that the City can properly on-board and train this new staff member.

4.1 The Consultant shall submit to the City, by no later than the 10th day of each month, its bill for services itemizing the fees and costs incurred during the previous month. The City shall pay the Consultant all uncontested amounts set forth in the Consultant's bill within 30 days after it is received.

5.0 CONFLICT OF INTEREST. The Consultant represents that it presently has no interest and shall not acquire any interest, direct or indirect, in any real property located in the City which may be affected by the services to be performed by the Consultant under this Agreement. The Consultant further represents that in performance of this Agreement, no person having any such interest shall be employed by it.

5.1 The Consultant represents that no City employee or official has a material financial interest in the Consultant's business. During the term of this Agreement and as a result of being awarded this contract, the Consultant shall not offer, encourage, or accept any financial interest in the Consultant's business by any City employee or official.

5.2 If a portion of the Consultant's services called for under this Agreement shall ultimately be paid for by reimbursement from and through an agreement with a developer of any land within the City or with a City franchisee, the Consultant warrants that it has not performed any work for such developer/franchisee within the last 12 months, and shall not negotiate, offer, or accept any contract or request to perform services for that identified developer/franchisee during the term of this Agreement.

6.0 TERMINATION. Either the City Manager or the Consultant may terminate this Agreement, without cause, by giving the other party ten (10) days written notice of such termination and the effective date thereof.

6.1 In the event of such termination, all finished or unfinished documents, reports, photographs, films, charts, data, studies, surveys, drawings, or other documentation prepared by or in the possession of the Consultant under this Agreement shall be returned to the City. Consultant shall prepare and shall be entitled to receive compensation pursuant to a close-out bill for services rendered in a manner reasonably satisfactory to the City and fees incurred pursuant to this Agreement through the notice of termination.

6.2 If the Consultant or the City fail to fulfill in a timely and proper manner its obligations under this Agreement, or if the Consultant or the City violate any of the covenants, agreements, or stipulations of this Agreement, the Consultant or the City shall have the right to terminate this Agreement by giving written notice to the other party of such termination and specifying the effective date of such termination. The Consultant shall be entitled to receive compensation in accordance with the terms of this Agreement for any work satisfactorily completed hereunder. Notwithstanding the foregoing, the Consultants shall not be relieved of liability for damage sustained by virtue of any breach of this Agreement and any payments due

DRAFT

under this Agreement may be withheld to off-set anticipated damages.

7.0 INSURANCE.

7.1 Without limiting Consultant's obligations arising under paragraph 8 - Indemnity, Consultant shall not begin work under this Agreement until it obtains policies of insurance required under this section. The insurance shall cover Consultant, its agents, representatives, and employees in connection with the performance of work under this Agreement, and shall be maintained throughout the term of this Agreement. Insurance coverage shall be as follows:

7.1.1 General Liability Insurance insuring City of Rolling Hills, its elected and appointed officers, agents, and employees from claims for damages for personal injury, including death, as well as from claims for property damage which may arise from Consultant's actions under this Agreement, whether or not done by Consultant or anyone directly or indirectly employed by Consultant. Such insurance shall have a combined single limit of not less than $1,000,000.

7.1.2 Automobile Liability Insurance covering bodily injury and property damage for all activities of the Consultant arising out of or in connection with the work to be performed under this Agreement in an amount of not less than $1,000,000 combined single limit for each occurrence. If Consultant or Consultant's employees will use personal automobiles in any way on this project, Consultant shall obtain evidence of personal automobile liability coverage for each such person.

7.1.3 Worker's Compensation Insurance for all Consultant's employees to the extent required by the State of California. Consultant shall similarly require all authorized subcontractors pursuant to this Agreement to provide such compensation insurance for their respective employees.

7.1.4 Professional Liability Coverage for professional errors and omissions liability insurance for protection against claims alleging negligent acts, errors, or omissions which may arise from the Consultant's operations under this Agreement, whether such operations are by the Consultant or by its employees, subcontractors, or subconsultants. The amount of this insurance shall not be less than one million dollars ($1,000,000) on a claims-made annual aggregate basis, or a combined single-limit-per-occurrence basis. When coverage is provided on a "claims made basis," Consultant will continue to renew the insurance for a period of three (3) years after this Agreement expires or is terminated. Such insurance will have the same coverage and limits as the policy that was in effect during the term of this Agreement, and will cover Consultant for all claims made by City arising out of any errors or omissions of Consultant, or its officers, employees, or agents during the time this Agreement was in effect.

7.2 Deductibility Limits for policies referred to in subparagraphs 7.1.1 and 7.1.2 shall not exceed $5,000 per occurrence.

DRAFT

7.3 Additional Insured. City of Rolling Hills, its elected and appointed officers, agents, and employees shall be named as additional insureds on policies referred to in subparagraphs 7.1.1 and 7.1.2.

7.4 Primary Insurance. The insurance required in subparagraphs 7.1.1 and 7.1.2 shall be primary and not excess coverage.

7.5 Evidence of Insurance. Consultant shall furnish City, prior to the execution of this Agreement satisfactory evidence of the insurance required issued by an insurer authorized to do business in California, and an endorsement to each such policy of insurance evidencing that each carrier is required to give City at least 30 days prior written notice of the cancellation of any policy during the effective period of the Agreement. All required insurance policies are subject to approval of the City Attorney. Failure on the part of Consultant to procure or maintain said insurance in full force and effect shall constitute a material breach of this Agreement or procure or renew such insurance, and pay any premiums therefore at Consultant's expense.

8.0 INDEMNIFICATION. Consultant shall indemnify, defend with counsel approved by City, and hold harmless City, its officers, officials, employees and volunteers from and against all liability, loss, damage, expense, cost (including without limitation reasonable attorneys fees, expert fees and all other costs and fees of litigation) of every nature arising out of or in connection with Consultant's performance of work hereunder or its failure to comply with any of its obligations contained in this Agreement, regardless of City's passive negligence, but excepting such loss or damage which is caused by the sole active negligence or willful misconduct of the City. Should City in its sole discretion find Consultant's legal counsel unacceptable, then Consultant shall reimburse the City its costs of defense, including without limitation reasonable attorneys fees, expert fees and all other costs and fees of litigation. The Consultant shall promptly pay any final judgment rendered against the City (and its officers, officials, employees and volunteers) covered by this indemnity obligation. It is expressly understood and agreed that the foregoing provisions are intended to be as broad and inclusive as is permitted by the law of the State of California and will survive termination of this Agreement.

9.0 GENERAL TERMS AND CONDITIONS.

9.1 Non-Assignability. The Consultant shall not assign or transfer any interest in this Agreement without the express prior written consent of the City.

9.2 Non-Discrimination. The Consultant shall not discriminate as to race, creed, gender, color, national origin or sexual orientation in the performance of its services and duties pursuant to this Agreement, and will comply with all applicable laws, ordinances and codes of the federal, state, county and city governments.

9.3 Compliance with Applicable Law. The Consultant and the City shall comply with all applicable laws, ordinances and codes of the federal, state, county and city governments.

9.4 Independent Contractor. Consultant is an independent contractor. This Agreement is by and between the City and the Consultant and is not intended, and shall not be construed, to

DRAFT

create the relationship of agency, servant, employee, partnership, joint venture or association, as between the City and the Consultant.

9.4.1 The Consultant shall be an independent contractor, and shall have no power to incur any debt or obligation for or on behalf of the City. Neither the City nor any of its officers or employees shall have any control over the conduct of the Consultant, or any of the Consultant's employees, except as herein set forth, and the Consultant expressly warrants not to, at any time or in any manner, represent that it, or any of its agents, servants, or employees are in any manner employees of the City, it being distinctly understood that the Consultant is and shall at all times remain to the City a wholly independent contractor and the Consultant's obligations to the City are solely such as are prescribed by this Agreement. Each Consultant employee shall remain in the fulltime employ of Consultant, and the City shall have no liability for payment to such Consultant employee of any compensation or benefits, including but not limited to workers' compensation coverage, in connection with the performance of duties for the City.

9.5 Copyright. No reports, maps, or other documents produced in whole or in part under this Agreement shall be the subject of an application for copyright by or on behalf of the Consultant.

9.6 Legal Construction.

9.6.1 This Agreement is made and entered into in the State of California and shall in all respects be interpreted, enforced, and governed under the laws of the State of California.

9.6.2 This Agreement shall be construed without regard to the identity of the persons who drafted its various provisions. Each and every provision of this Agreement shall be construed as though each of the parties participated equally in the drafting of same, and any rule of construction that a document is to be construed against the drafting party shall not be applicable to this Agreement.

9.6.3 The article and section, captions and headings herein have been inserted for convenience only and shall not be considered or referred to in resolving questions or interpretation or construction.

9.6.4 Whenever in this Agreement the context may so require, the masculine gender shall be deemed to refer to and include the feminine and neuter, and the singular shall refer to and include the plural.

9.7 Counterparts. This Agreement may be executed in counterparts and as so executed shall constitute an agreement which shall be binding upon all parties hereto.

9.8 Final Payment Acceptance Constitutes Release. The acceptance by the Consultant of the final payment made under this Agreement shall operate as and be a release of the City from all claims and liabilities for compensation to the Consultant for anything done, furnished or relating to the Consultant's work or services. Acceptance of payment shall be any negotiation of the City's check or the failure to make a written extra compensation claim within ten (10) calendar days of

DRAFT

the receipt of that check. However, approval or payment by the City shall not constitute, nor be deemed, a release of the responsibility and liability of the Consultant, its employees, sub-consultants, and agents for the accuracy and competency of the information provided or work performed; nor shall such approval or payment be deemed to be an assumption of such responsibility or liability by the City for any defect or error in the work prepared by the Consultant, its employees, sub-consultants, and agents.

9.9 Corrections. In addition to the above indemnification obligations, the Consultant shall correct, at its expense, all errors in the work which may be disclosed during the City's review of the Consultant's work under this Agreement. Should the Consultant fail to make such correction in a reasonably timely manner, such correction shall be made by the City, and the cost thereof shall be charged to the Consultant.

9.10 Files. All files of the Consultant pertaining to the City shall be and remain the property of the City. The City will control the physical location of such files during the term of this Agreement. Consultant shall provide any such files in its possession to City upon termination of the Agreement. Consultant will be entitled to retain copies of such files upon termination of this Agreement in accordance with law.

9.11 Waiver; Remedies Cumulative. Failure by a party to insist upon the performance of any of the provisions of this Agreement by the other party, irrespective of the length of time for which such failure continues, shall not constitute a waiver of such party's right to demand compliance by such other party in the future. No waiver by a party of a default or breach of the other party shall be effective or binding upon such party unless made in writing by such party, and no such waiver shall be implied from any omissions by a party to take any action with respect to such default or breach. No express written waiver of a specified default or breach shall affect any other default or breach, or cover any other period of time, other than any default or breach or period of time specified. All of the remedies permitted or available to a party under this Agreement, or at law or in equity, shall be cumulative and alternative, and invocation of any such right or remedy shall not constitute a waiver or election of remedies with respect to any other permitted or available right of remedy.

9.12 Mitigation of Damages. In all such situations arising out of this Agreement, the parties shall attempt to avoid and minimize the damages resulting from the conduct of the other party.

9.13 Partial Invalidity. If any provision in this Agreement is held by a court of competent jurisdiction to be invalid, void or unenforceable, the remaining provisions will nevertheless continue in full force without being impaired or invalidated in any way.

9.14 Attorneys' Fees. The parties hereto acknowledge and agree that each will bear his/her or its own costs, expenses, and attorneys' fees arising out of and/or connected with the negotiation, drafting and execution of the Agreement, and all matters arising out of or connected therewith except that, in the event any action is brought by any party hereto to enforce this Agreement, the prevailing party in such action shall be entitled to reasonable attorneys' fees and costs in addition to all other relief to which that party or those parties may be entitled.

DRAFT

9.15 Entire Agreement. This Agreement constitutes the whole agreement between the City and the Consultant, and neither party has made any representations to the other except as expressly contained herein. Neither party, in executing or performing this Agreement, is relying upon any statement or information not contained in this Agreement. Any changes or modifications to this Agreement must be made in writing appropriately executed by both the City and the Consultant.

9.16 Warranty of Authorized Signatories. Each of the signatories hereto warrants and represents that he or she is competent and authorized to enter into this Agreement on behalf of the party for whom he or she purports to sign.

10.0 NOTICES. Any notice required to be given hereunder shall be deemed to have been given by depositing said notice in the United States mail, postage prepaid, and addressed as follows:

CITY:	CONSULTANT:
Elaine Jeng, P.E.	4Leaf, Inc.
City Manager	Attn: Pete Roque
2 Portuguese Bend Road	5140 Birch Street, Second Floor
Rolling Hills, CA 90274	Newport Beach, CA 92660
TEL (310) 377-1521	TEL (949) 887-9432

11.0. **DISCLOSURE REQUIRED.** (City and Consultant initials required at 11.1)

11.1 Disclosure Required. By their respective initials next to this paragraph, City and Consultant hereby acknowledge that Consultant is a "consultant" for the purposes of the California Political Reform Act because Consultant's duties would require him or her to make one or more of the governmental decisions set forth in Fair Political Practices Commission Regulation 18700.3(a) or otherwise serves in a staff capacity for which disclosure would otherwise be required were Consultant employed by the City. Consultant hereby acknowledges his or her assuming-office, annual, and leaving-office financial reporting obligations under the California Political Reform Act and the City's Conflict of Interest Code and agrees to comply with those obligations at his or her expense. Prior to consultant commencing services hereunder, the City's Manager shall prepare and deliver to consultant a memorandum detailing the extent of Consultant's disclosure obligations in accordance with the City's Conflict of Interest Code.

City Initials _____
Consultant Initials_____

11.2 Disclosure Not Required. By their initials next to this paragraph, City and Consultant hereby acknowledge that Consultant is not a "consultant" for the purpose of the California Political Reform Act because Consultant's duties and responsibilities are not within the scope of the definition of consultant in Fair Political Practice Commission Regulation 18700.3(a) and is otherwise not serving in staff capacity in accordance with the City's Conflict of Interest Code.

DRAFT

City Initials _____
Consultant Initials _____

This Agreement is executed on January __, 2023, at City of Rolling Hills, California.

CITY OF ROLLING HILLS:

_____
Elaine Jeng, P.E., City Manager

CONSULTANT:

_____
Pete Roque, Director of Code Enforcement

ATTEST:

_____
Christian Horvath, City Clerk

APPROVED AS TO FORM:

_____
Patrick Donegan, City Attorney

DRAFT

EXHIBIT A

SCOPE OF SERVICES

1. Overview

The project shall consist of Consultant's staff coordinating with the City of Rolling Hills Community and Planning Department to provide Code Compliance staff to the City. Pete Roque shall be the Project Manager and is fully responsible for seeing that the project is completed in compliance with the provisions of the agreement. Consultant shall use best efforts to provide the same Code Compliance staff to the City to ensure operational consistency. In the event that Code Compliance staff provided to the City changes for a second time in any one year period (*i.e.,* Consultant provides a third different staff member to the City for code compliance work), Consultant shall provide the City a written memorandum explaining the circumstances resulting in the staff turnover and provide an action plan to the City that will be employed to ensure staffing consistency to the City.

2. Scope of Work

A. Consultant's staff shall conduct all inspections and re-inspections of single family and multi-family properties and public facility properties and will identify and enforce all violations of City's municipal code, ordinances, laws, and all applicable statutes. Personnel shall issue notifications, letters, citations and warrants when necessary to achieve compliance. Staff will be required to document all complaints received, inspections conducted through photos, notes, and correspondences.

B. In addition to the services mentioned above, Consultant will provide the following services to the City (this is not intended to be a comprehensive list):

i. Investigate complaints from the public and staff regarding violations of the municipal codes, ordinances, standards and health and safety regulations.
ii. Initiate contact with residents, business representatives, and other parties to explain the nature of the violations and encourage compliance with municipal codes, zoning and land use ordinances, and community standards.
iii. Prepare notices of violation for non-compliance according to applicable codes and regulations.
iv. Prepare reports for cases requiring legal action or civil abatement.
v. When required, meet with legal counsel and provide testimony on criminal cases.
vi. Maintain records of complaints, inspections, violation notices, and other field enforcement activities.
vii. Coordinate with City departments on cases as they relate to code enforcement.

DRAFT

EXHIBIT B

FEE AND COST SCHEDULE

Task	Cost
Code Enforcement Officer	$105.00/ hour

DRAFT

QUALIFICATIONS TO PROVIDE

ON-CALL CODE ENFORCEMENT SERVICES

TO THE

CITY OF ROLLING HILLS



Submitted November 28, 2022

4LEAF, INC.
ENGINEERING . CONSTRUCTION MANAGEMENT
PLAN CHECK . BUILDING INSPECTION . PLANNING

TABLE OF CONTENTS

SECTION 1
COVER LETTER 1

SECTION 2
PROFILE OF THE FIRM 3

SECTION 3
WORK APPROACH 4

SECTION 4
PERSONNEL 10

SECTION 5
PROJECT EXPERIENCE 12

APPENDIX
RESUMES 20

QUALIFICATIONS TO PROVIDE

ON-CALL CODE ENFORCEMENT SERVICES

TO THE

CITY OF ROLLING HILLS

SECTION 1

COVER LETTER

City of Rolling Hills
Planning & Community Services Department
2 Portuguese Bend Road
Rolling Hills, CA 90274
Attn: John F. Signo, AICP

November 28, 2022

RE: Qualifications to Provide Code Enforcement Services.

Dear Mr. Signo,

4LEAF, Inc. (4LEAF) is excited to have the opportunity to submit our qualifications to provide professional Code Enforcement Services to the City of Rolling Hills. 4LEAF has been providing these services to numerous public and private clients throughout California for more than 21 years and is eager to provide these services to the City. Our Code Enforcement Division is our newest and fastest growing scope—we have grown our team to 30+ professionals and tripled our Code Enforcement clients in the course of the past year. 4LEAF is the ideal choice for the following reasons:

Local Presence

4LEAF has provided Code Enforcement Services to many clients throughout California, including the cities of Lomita, Hermosa Beach, and Signal Hill and the counties of Los Angeles, Riverside, and San Bernardino.

Team

4LEAF holds its employees in high regard and can ensure the City that all personnel have the knowledge, training, experience, and competencies to fulfill the roles and responsibilities of their assigned positions. We are confident in the quality team we can provide to the City and guarantee high-quality service in conformity with your projects' standards.

4LEAF staff have the experience working with property owners and other responsible parties to bring properties and conditions into compliance. Our Code Enforcement team is skilled in using processes including issuing administrative citations to establish whether violations of law exist on a property and ensuring compliance.

Scopes of Work

- ✓ Blight Enforcement
- ✓ Business License Enforcement
- ✓ Classroom Training with CEUs
- ✓ Community Outreach
- ✓ Department Assessments
- ✓ Hearing Officers
- ✓ Lead Paint Abatement
- ✓ Massage Parlor Enforcement
- ✓ Parking Enforcement
- ✓ Policy Review
- ✓ Program Analysis
- ✓ Program Development
- ✓ Project-Specific Assignments
- ✓ Rental Housing Enforcement
- ✓ Review and Develop SOPs
- ✓ Short-Term Rental Programs
- ✓ Staff Augmentation
- ✓ Stormwater Enforcement
- ✓ Subject-Matter Experts
- ✓ Substandard Housing
- ✓ Tobacco Enforcement
- ✓ Training Field Staff
- ✓ Vendor Enforcement
- ✓ Zoning Enforcement

☑ Leadership

The contract with the City of Rolling Hills will be managed by Pete Roque and Ceci Muela, our Directors of Code Enforcement. Pete has 17+ years of industry experience, has served on several local, State, and national boards, has managed several Code Enforcement Divisions, and is an industry subject matter expert. Cecilia is also a Code Enforcement expert with 20+ years of experience, is a national Code Enforcement trainer for state, national, and international code enforcement organizations, and is the founder of Women Leaders in Code Enforcement (WLCE).

Both Pete and Cecilia have implemented policies and procedures in many jurisdictions as well as created needed text amendments to ensure that Code Enforcement departments, projects, and personnel have the proper tools to succeed. They will both be available to the City to discuss project needs, staff requests, and contractual details.

PM/Director of Code Enforcement	PM/Director of Code Enforcement	4LEAF Local Office
Pete Roque Office: (949) 877-9432 Mobile: (562) 569-0098 Email: PRoque@4leafinc.com	Cecilia Muela Office: (949) 877-9432 Mobile: (707) 479-9883 Email: CMuela@4leafinc.com	5140 Birch Street, 2nd Floor Newport Beach, CA 92660 Phone: (949) 877-9432 Website: 4LEAFINC.COM

We appreciate this opportunity to present our qualifications and look forward to hearing back from the City. Should you have any questions, please do not hesitate to contact us.

Respectfully submitted,

Cecilia Muela
Director of Code Enforcement

Pete Roque
Director of Code Enforcement

QUALIFICATIONS TO PROVIDE

ON-CALL CODE ENFORCEMENT SERVICES

TO THE

CITY OF ROLLING HILLS

SECTION 2

PROFILE OF THE FIRM

SECTION 2: PROFILE OF THE FIRM

4LEAF, Inc. (4LEAF) is a California "C" Corporation that was established in 1999 and incorporated in 2001. Our extensive team of field staff, engineers, and managers are fully equipped with the training and experience needed to successfully provide complete services including Code Enforcement, Plan Check (on-site and virtual/remote), CASp, Inspections, Permit Technician assistance, professional development training, and other related professional and technical services to the City's Community Development Department. Our goal is to set the industry standard for excellent customer service, and we have grown to more than 400 personnel throughout California, Arizona, Washington, Nevada, and New England. We are able to serve any full-time or part-time need the City may have, regardless of scope and duration.

Management Team

President: Kevin Duggan
Phone: (925) 462-5959
Email: KDuggan@4leafinc.com

PM/Director of Code Enforcement: Cecilia Muela
Phone: (707) 479-9883
Email: CMuela@4leafinc.com

PM/Director of Code Enforcement: Pete Roque
Phone: (562) 569-0098
Email: PRoque@4leafinc.com

Director of Inspection: Mike Leontiades, CBO
Phone: (925) 681-8842
Email: MLeontiades@4leafinc.com

Office Locations

Bay Area - Headquarters
2126 Rheem Drive
Pleasanton, CA 94588

Southern California
5140 Birch Street, Second Floor
Newport Beach, CA 92660

San Diego
402 West Broadway, Suite 400
San Diego, CA 92101

Santa Cruz
701 Ocean Street
Santa Cruz, CA 95060

Sacramento
8896 North Winding Way
Fair Oaks, CA 95628

Paradise
6848 Skyway, Suite F
Paradise, CA 95969

Washington
1201 Pacific Avenue, Suite 600
Tacoma, WA 98402

4LEAF Consulting, LLC
125 E. Reno Ave., Suite 3
Las Vegas, NV 89119

New England
132 Central St., Suite 210
Foxboro, MA 02035

Professionals

4LEAF maintains the largest database of qualified personnel of varied qualifications.

Title	# of Staff	Title	# of Staff
Code Enforcement Staff (PC832)	30+	**ICC Certified Inspectors & Inspectors of Record**	200+
ICC Certified Building Officials	40+	**Registered Architects**	5+
Registered Engineers (PE, SE)	20+	**ICC Permit Technicians**	60+
ICC Certified Plans Examiners	65+	**CASp**	12
Construction Managers/Inspectors	40+	**Fire Plans Examiners & Inspectors**	30+

Company Mission

4LEAF strives to be the best firm by providing our clients with outstanding customer service and first-rate services. We put our philosophy into action by building client relationships and prioritizing the needs of our clients—this has led us to become the industry leader in providing Building and Safety Services to both public and private clients.

Our Code Enforcement Division is a scope we have been aggressively expanding in recent years and we have strategically advanced our team of professionals to further strengthen our project endeavors. Our Code Enforcement staff is dedicated to preserving and enhancing the quality of life for the residents in our client jurisdictions and work toward a goal of resolving problems efficiently and safely. Enforcing and upholding municipal codes (including weed and community preservation, unpermitted construction, unsafe property conditions, hazards to public health, and zoning) is of utmost importance to 4LEAF. Our Code Enforcement Division endeavors to improve communities through education, cooperation, and responsive enforcement.

We have the resources to deploy staff to any state and we have provided services all over the country. Our team is well-equipped and qualified to perform services for any project and in any location. By choosing 4LEAF, you are choosing a company that prides itself on quality work, top-notch customer service, experienced staff, and a multitude of project experience. Please review our scope of services and project examples in order to gain more understanding about our firm and how we can help achieve the City's project goals.

Code Enforcement Scopes of Service

Below is a comprehensive chart of 4LEAF's Code Enforcement services. We have detailed each scope of service in Section 3: Work Approach.

Blight Enforcement	Parking Enforcement	Staff Augmentation (all levels)
Business License Enforcement	Policy Review	Stormwater Enforcement
Classroom Training with CEUs	Program Analysis	Subject-Matter Experts
Community Outreach	Program Development	Substandard Housing
Department Assessments	Project-Specific Assignments	Tobacco Enforcement
Hearing Officers	Rental Housing Enforcement	Training Field Staff
Lead Paint Abatement	Review and Develop SOPs	Vendor Enforcement
Massage Parlor Enforcement	Short-Term Rental Programs	Zoning Enforcement

QUALIFICATIONS TO PROVIDE

ON-CALL CODE ENFORCEMENT SERVICES

TO THE

CITY OF ROLLING HILLS

SECTION 3

WORK APPROACH

SECTION 3: WORK APPROACH

Our Code Enforcement personnel are certified through the **International Code Council, CACEO, and various training programs offered through accredited institutions**. In addition, most of our personnel hold a PC832, ICC Property Maintenance and Housing Inspector, and/or CACEO certification.

4LEAF staff have the experience in working cooperatively with property owners and other responsible parties to bring properties and/or conditions into compliance with applicable bodies of law. Our team will be able to determine when voluntary compliance is not forthcoming from property owners or responsible parties. 4LEAF staff has experience in investigative practices that aid in substantiating a complaint exists on a property and in turn address verified violations through proper due process noticing.



4LEAF Code Enforcement Officers have experience in writing criminal citations and in working with legal counsel to assist in the successful prosecution of Code Enforcement cases either in criminal or civil court when necessary. We focus on nearly every area of Code Enforcement including but not limited to the following categories detailed below.

SCOPE OF SERVICES & AREAS OF ENFORCEMENT

Blight Enforcement

Our team works to identify and enforce State and Local laws pertaining to the maintenance of private property. Through field contact with tenants and property owners, our team works efficiently in providing guidance to address blighted conditions such as overgrown weeds, trash and debris, and graffiti.

Business License Enforcement

4LEAF is trained to identify businesses that operate without a required business license making them non-compliant with municipal code requirements.

Classroom Training with CEUs



You can often find members of 4LEAF training nationally for organizations such as the International Code Council (ICC), American Association of Code Enforcement (AACE), California Association of Code Enforcement Officers (CACEO), and other nationally recognized affiliations of these chapters. 4LEAF's training leads include Cecilia Muela, Pete Roque, Nick Henderson, CBO, and Anthony Mullins. Our instructors are nationally accredited and offer Continuing Education Credits (CEUs). They currently cover training topics such as:

- Building Blocks for Code Enforcement Officer Success
- Building Inspections and Code Enforcement – A Powerful Duo

- Case Management from Start to Finish
- Effective Communications – Bridging the Gap with External and Internal Customers
- IPMC 2021 or 2018 Exam Prep
- IPMC 2021 Overview
- Mold, Lead, Asbestos, & Vectors Enforcement
- Officer Safety – Drug Awareness for the Code Enforcement Officer
- Officer Safety – Encountering Mental Illness in the field of Code Enforcement (Self-Care)
- Officer Safety – Field Inspection Protocols for the Code Enforcement Officer
- Officer Safety – Gang Awareness for the Code Enforcement Officer
- Officer Safety – Hazardous Building Safety for the Code Enforcement Officer

Community Outreach

4LEAF will review current outreach and engagement initiatives and make appropriate recommendations to the municipality. Items typically reviewed include:

- Opportunities for involvement in community events
- Creation of pamphlets and marketing material
- Social media engagement
- News media outlets
- Municipal Code Enforcement web page
- Review of frequently asked questions



Department Assessments

4LEAF is working with several Community Development Departments to provide assessments of their code units reviewing closely staffing levels, Standard Operating Procedures (including branding/rebranding, target issues, prioritization of existing code enforcement cases, community engagement strategies, written materials such as compliance notices, postings and door hangers, data entry, inspection response time management, and training programs. 4LEAF provides in-house assessments and regular meetings with directors and municipal stakeholders for plan implementation and execution.

Hearing Officers

4LEAF has Hearing Officers available for contracted municipalities. Our seasoned officers are trained to understand the existing Municipal Code as well as other adopted codes and make findings as to whether a violation exists. Results may include fines or granting additional time for compliance for respondents with unusual hardships.

Inspections

4LEAF can provide certified and qualified staff to perform inspections in a lawful manner that respects the reasonable expectations of privacy and security of residents and their properties. Inspections conducted will determine if conditions on the properties are compliant with applicable sections of the current editions of the International Property Maintenance Code (IPMC), Municipal Code, Zoning Code, California Health and Safety Codes, CA Residential Building Code, and trade codes.



Upon assignment, 4LEAF's Code Enforcement staff will be ready to respond and provide compliance solutions to code compliance cases new and existing with minimal impact to current processes.

4LEAF Code Enforcement Inspectors are qualified to do the following:

- Perform inspections for violations of Building Codes and Ordinances as adopted by the municipality.
- Research properties for prior approvals, permits, and general information relating to violations.
- Investigate and take necessary action when a violation of municipal codes exists
- Consult with the City Counsel as required, when requested by the Code Enforcement Manager/Director, and when escalated enforcement may be required.
- Comply with the municipality's procedures for reporting inspection results and deficiencies.
- Using municipal inspection correction forms.
- Making appropriate entries while resulting inspections, capturing case status communications, and login-in of notices sent to responsible parties.
- Conduct follow-up inspections as needed.
- Notify the responsible parties of other agency approvals prior to closing a code enforcement action.
- Maintain records as needed for the efficient and effective operation of the municipality.
- Meet with members of the general public and municipal staff on a daily basis as needed.

Lead Abatement



Although lead-based legislation has been around since the 1950s, nationwide regulation was not enforced until 1971 with the introduced of the Lead-Based Paint Poisoning Prevention Act (LBPPPA), which prohibited the use of lead-based paint in residential structures constructed or rehabilitated by the Federal government or with Federal assistance. In 1973, an amendment to the LBPPPA stated that lead-based paint should be removed from pre-1950 housing and structures. Our Code Enforcement team follows the requirements set forth by the State of California to ensure proper lead safe practices are taking place in removal of lead-based paint to protect citizens from exposure.

Additionally, our team participated at the National Healthy Homes Conference in 2022 in Baltimore, MD, where we spoke on the importance of Code Enforcement for Lead Paint Abatement Programs to safeguard communities.

Massage Parlor Enforcement

This scope can often be utilized for undercover stings with partnering agencies for businesses that not only violate criminal laws but also building code violations, licensing requirements, and potential massage parlor ordinances in the jurisdiction. Early detection is vital in these cases and steps include background checks and comparable effort applied. Our team has lead programs specializing in organizing and mitigating illegal actions in massage parlors.

Parking Enforcement

4LEAF has the capabilities of providing parking enforcement. This includes:

- Enforcement of State and municipal parking regulations.
- Removal of abandoned and nuisance vehicles from the public right-of-way.
- Issuance of parking citations and review of contested citations.

Policy Review

4LEAF shall review and read current policies and procedures and define policy clearly as it sets the tone for your municipality's Code Enforcement Program. A clear policy communicates to everyone what is expected of them—whether it's how they handle complaints, how Code Enforcement Officers conduct compliance reviews, or any other aspect that the municipality needs to have communicated and consistently followed. 4LEAF will develop a well-defined user-friendly format.

Program Analysis

4LEAF understands that Code Enforcement is an essential part of a community's public health and safety, providing a regulatory mechanism to ensure the public's overall wellbeing. Addressing the community's concern in a timely and efficient manner is paramount to a successful Code Enforcement Program. 4LEAF personnel will perform the following:

- Conduct investigative inspections of unpermitted activities
- Create standard operating procedure if required
- Conduct review of all administrative/misdemeanor citations
- Provide guidance for resolution of high case load along commercial corridors
- Assist with complex code enforcement cases
- Provide guidance for resolution of existing cases
- Provide field training if required
- Provide in-house training of traditional code enforcement protocols
- Create an outreach plan to address and deter unpermitted vending/commercial corridor violations

Program Development

4LEAF project managers have the experience in working cooperatively with our clients to further develop and enhance their Code Enforcement Program when requested. Our project managers are currently working with local jurisdictions to revamp and strengthen Code Enforcement Programs to gain voluntary compliance, provide resident education, and effectively communicate with the public. 4LEAF staff takes an approach in recommending, implementing, and executing program assessments, creation of policies and procedures, creation of training manuals for new hires, providing educational materials for the public, providing staff with up-to-date training, teaching current Code Enforcement staff options for compliance using adopted ordinances, and providing recommendations to cases that may require specialized expertise that may be sensitive in nature. 4LEAF staff also has designated staff tracking recent legislation to ensure the municipality follows state regulations and clients are aware of upcoming legislation that may affect their Code Enforcement Program.

Project-Specific Assignments

Our Code Enforcement Directors are often brought on board by municipalities to provide Code Enforcement consulting for on-going cases that need a fresh set of eyes and assessment. Our personnel can review current case files and compare that to the existing Municipal Code and Department's Standard Operating Procedures.

Once the review is conducted, 4LEAF provides a report of our findings and our mitigation strategies related to that case. 4LEAF personnel is made available to speak with stakeholders such as Department Heads, Council, and other elected officials. If necessary, we can also provide Expert Witness Testimony.

Rental Housing Enforcement



Our team will assist with the inspection of residential rental properties on a routine and comprehensive basis to assure the overall quality of the rental meets the requirements of the Health and Safety Code and property maintenance guidelines. This includes educating property owners, property managers, and tenants about those requirements.

Review and Develop SOP's

4LEAF routinely works with Code Enforcement Divisions to review the current Standard Operating Procedures and provide suggestions for enhancing SOP's. Our staff can also help implement and train the existing municipal personnel in these changes. Currently, we are providing these services for California municipalities such as the cities of Napa, Lathrop, and Artesia.

Staff Augmentation

4LEAF specializes in providing personnel to municipalities on a part-time or full-time basis. We provide staff with training opportunities, study materials, company phones, and energy- saving fleet vehicles. 4LEAF's Code Enforcement Staff Augmentation personnel categories include:

- Department Director
- Department Manager
- Senior Code Enforcement Officer
- Code Enforcement Officer II
- Code Enforcement Officer I
- Code Enforcement Coordinator
- Hearing Officer



Short-Term Rental Programs

One of the fastest growing programs within Code Enforcement Divisions is short-term rentals. 4LEAF assists with compliance with municipal short-term rental ordinances that require property owners to adhere to several rules including limiting the number of daytime and overnight guests, prohibiting events and amplified sound, and posting specific rules and emergency information, among others.

Stormwater Enforcement

4LEAF provides Stormwater Enforcement. This includes the visual inspection of infrastructure dedicated to the management of rainwater. Violations would include having inadequate erosion/sediment controls for property, failing to conduct/document inspections, illegal dumping, overgrowth of vegetation, and flooding.

Substandard Housing



One of the major areas of code enforcement throughout the U.S. is the inspection of Substandard Housing. 4LEAF Code Enforcement Officers routinely inspect and report any violations to housing codes including substandard and uninhabitable conditions, accumulation of trash and debris, lack of utilities, property maintenance, mold, and rodent/insect infestations.

Tobacco Enforcement



4LEAF has experience working within Tobacco Enforcement programs to ensure retailers are properly licensed/permitted for the sale of tobacco and such establishments are posting proper notification such as STAKE Act stickers at each point of sale. In addition, we can assist in compliance with work-place smoking and vaping prohibitions.

Field Staff Training

Aside from the classroom training, 4LEAF personnel is also available to conduct field training. This includes ride-alongs with municipal personnel. This hands-on approach is often effective for training in communication, technical training, and enforcement of Municipal Codes.

Vendor Enforcement

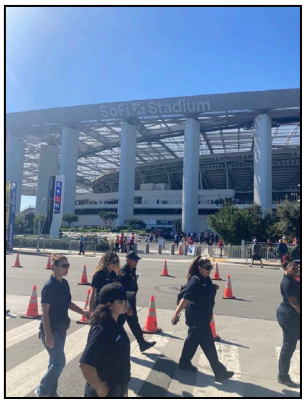

4LEAF personnel are trained to enforce State and Local laws regarding unpermitted vending activity, issuance of Administrative Citations to vendors, generating inspection reports, testify at hearings, and provide strategic planning for large scale vending activities associated with entertainment venues. Often, this can include property the municipality owns or controls for areas such as vending like food or merchandise. This includes areas such as:

- Parks
- Public Right of Ways (such as sidewalks)
- Areas outside permitted Vending Locations

Zoning

4LEAF personnel can work with Departments to help determine whether project plans have been executed according to the conditions of approval for approved projects. Examples include:

- Construction of a building that is not allowed in a particular zoning designation.
- Building a structure (or an addition to a structure) that is too tall or that obstructs another person's view or access to light/air space.
- Conducting various operations in non-designated areas, including manufacturing, packaging, selling, growing, labeling, and other business/industrial activities.
- Living in spaces that are not designated as residential areas.
- Creating amounts of pollution or noise that exceed local limits.
- Adherence to set back and lot coverage requirements.

QUALIFICATIONS TO PROVIDE

ON-CALL CODE ENFORCEMENT SERVICES

TO THE

CITY OF ROLLING HILLS

SECTION 4

PERSONNEL

SECTION 4: PERSONNEL

As your consultant, 4LEAF understands that **our role is to be an advocate on behalf of the City and** represent the municipality's best interests. 4LEAF's team will function as an extension of your staff, seamlessly integrating with the personnel and practices established by the City while adding the perspective and expertise that only 4LEAF can offer. Our goal, which we have successfully accomplished on previous clients' projects, is to have our staff integrate with yours and be accepted as an essential part of your team. **4LEAF will not utilize subconsultants and can provide full- or part-time personnel for this contract.**

PROGRAM MANAGEMENT

Cecilia Muela – Project Manager/Director of Code Enforcement



This contract will be co-managed by our **Project Manager and Director of Code Enforcement, Cecilia Muela.** Cecilia is a Code Enforcement expert with over 20 years of experience in the field and has served in the capacities of Assistant Chief Building Official, Code Enforcement Supervisor, and Building Inspector for multiple California public agencies. Cecilia is a national code enforcement trainer for state, national, and international code enforcement organizations. Cecilia is skilled in Code Compliance, Government, Emergency Management, Law Enforcement, Disaster Response, and Substandard Housing. Cecilia founded the Women Leaders in Code Enforcement Symposium (WLCE), which was created to promote a supportive learning environment for women in the building industry. Through training opportunities, networking, and connecting with fellow industry leaders, WLCE's goal is to foster and support the ongoing development of women in current and future leadership roles.

Cecilia's contact information:
Office – (949) 877-9432 | Cell – (707) 479-9883
Email – CMuela@4leafinc.com

Pete Roque – Project Manager/Director of Code Enforcement



This contract will be co-managed by our **Project Manager/Director, Pete Roque.** Pete is a Code Enforcement expert with over 17 years of experience in the field and has served in the capacities of Code Enforcement Administrator, Code Enforcement Manager, and Community Development Inspector II for multiple California public agencies. With a demonstrated history of working in the government administration industry, Pete is skilled in Code Compliance, Government, Emergency Management, Law Enforcement, Disaster Response, and Plan Review.

Pete's contact information:
Office – (949) 877-9432 | Cell – (562) 569-0098
Email – PRoque@4leafinc.com

PROJECT TEAM QUALIFICATIONS

4LEAF holds its employees in high regard and can ensure the City that all personnel have the knowledge, training, experience, and competencies to fulfill the roles and responsibilities of their assigned positions. Our team members are results- and detail-oriented and uphold the values of our company. Below is a quick look into 4LEAF's Code Enforcement database. Our team includes:

Enforcement Staff	Title	Certifications
Pete Roque	Director of Code Enforcement	EPA Lead Renovation, Repair, & Painting, National Storm Water Inspector, Certified Code Enforcement Officer, PC832
Cecilia Muela	Director of Code Enforcement	SAP Evaluator, International Lead Safety for Renovation, Repair, & Painting, PC832, Certified Building Inspector, IPMC, Certified Permit Technician
Rodrigo Ochoa-Reynoso	Code Enforcement Officer/Inspector	PC832 *(Pending)*
Anthony Mullins	Senior Code Enforcement Officer	PC832, IPMC
Mike Aguirre	Code Enforcement Officer/Inspector	PC832
Tom Cervantes	Code Enforcement/Fire Inspector	PC832
Erasmia Konstantopoulos	Code Enforcement Officer	PC832, IPMC *(Pending)*
Jose Murillo	Code Enforcement Officer/Inspector	PC832, IPMC
Al Fasulo	Code Enforcement Officer	PC832, Certified Code Enforcement Officer
Nick Henderson, CBO	Code Enforcement Officer/Inspector	PC832
Doug Martin, CASp	Code Enforcement Officer/Inspector	PC832
JorDann Crawford	Code Enforcement Officer	PC832, IPMC *(Pending)*
Leonard Powell	Code Enforcement/Hearing Officer	PC832, Certified Code Enforcement Officer, IPMC
Nina Hamilton	Code Enforcement/Senior Inspector	PC832 *(Pending),* Certified Code Enforcement Officer
John Juarez	Senior Code Enforcement Officer	PC832
Michael Legault	Code Enforcement Officer/Inspector	PC832 *(Pending)*, Certified Code Enforcement Officer, IPMC
Andrea Nance Sevilla	Code Enforcement Officer	PC832
Milissa Hughes	Code Enforcement Officer/Inspector	PC832, Certified Code Enforcement Officer
Noah Roque	Code Enforcement Officer/Inspector	Certified Code Enforcement Officer
Eric Stephens	Code Enforcement Officer/Inspector	PC832, Certified Code Enforcement Officer, IPMC
Sarah Patton	Code Enforcement Officer/Inspector	CACEO Level I
Jennifer Keleher	Code Enforcement Officer/Inspector	PC832 *(Pending),* IPMC *(Pending)*

QUALIFICATIONS TO PROVIDE

ON-CALL CODE ENFORCEMENT SERVICES

TO THE

CITY OF ROLLING HILLS

SECTION 5

PROJECT EXPERIENCE

SECTION 5: PROJECT EXPERIENCE

City of Lathrop

Code Enforcement and Building Department Services

Since 2015, 4LEAF has been working with the City of Lathrop in several capacities including Code Enforcement, Plan Review, Inspections, and Interim Chief Building Official to assist the community in helping its customers update their construction to maintain compliance with the current codes, especially those who did not go through a formal permitting process.



4LEAF is assisting Lathrop with Municipal, Zoning, and Building Codes on public and private property throughout the City. Code Enforcement works to administer a fair and unbiased enforcement program, improve the overall appearance of the City, and works with residents, neighborhood associations, public service agencies, and other City departments to facilitate voluntary compliance with City codes, and correct municipal code and land use violations.

Code Enforcement Department Assessment

4LEAF is currently working with the Department Director to evaluate and develop the Code Enforcement Division's Standard Operating Procedures to ensure enforcement is able to be carried out per the City's Municipal Code. This includes the development of enforcement strategies and materials crucial to daily activities. Pete is focusing on several areas of enforcement, including:

- Abandoned Vehicles
- Air Pollution
- Graffiti
- Noise Complaints
- Standing Water / Water Waste
- Public Nuisance Violations
- Field Training Existing Staff

Building Department Consulting

In addition to Code Enforcement, 4LEAF has also provided as-needed consulting services to the City of Lathrop's Building Division. 4LEAF has provided such services as:

- Interim Building Official Services
- Staff Augmentation for Building Inspection and Permit Technicians
- Off-Site Plan Checking Services

Client Name: City of Lathrop
Project Location: Lathrop, CA
Client Contact: Teresa Vargas, City Manager
Client Address: 390 Town Centre Drive / Lathrop, CA 95330
Client Phone: (209) 941-7229
Contact Email: TVargas@ci.Lathrop.ca.us

City of Santa Rosa

Code Enforcement

4LEAF provides the City of Santa Rosa with two full-time Code Enforcement Officers, Milissa Hughes and Eric Stephens, to perform as-needed services for the City. The City's Code Enforcement Division is dedicated to working in partnership with residents, tenants, landlords, and business owners to promote and maintain a safe and desirable living and working environment. Additionally, the Division is responsible for ensuring that City codes are implemented on private property to address general health, life, fire, and safety issues facing residents.

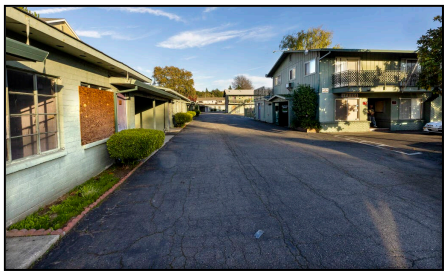

A large undertaking includes an assignment to review 200+ backlog cases involving files that had fallen through City cracks due to officer resignations/retirees or were not re-assigned to other officers. Milissa works with the City's Senior Code officer to determine which cases can be closed or if an updated letter must be sent to the owner for follow up. Additional responsibilities for this project include updating the City's database with notes and creating notices to be mailed to the property owner or tenant. Case violations consist of construction without obtaining permits (garage conversions, remodel, electrical, plumbing), expired permits, cannabis grows, substandard conditions, non-operable vehicles, trash/debris, site planning, historical landmark alterations, etc.

An additional assignment for the City that began in September 2022 includes addressing short-term rentals (STR), which entails on-call (24-hour) and after-hour response, processing a backlog of 100+ STR cases, addressing new cases and complaints, data collection, and issuing citations (30+ to date).

Common violations our Code Enforcement Officers address for as-needed services include the following:

- Animal violations
- Unpermitted work
- Cannabis cultivation
- Graffiti
- Home business
- Overgrown vegetation
- Signs
- Short-term rentals
- Substandard housing
- Vehicle storage

By working together with the community, 4LEAF and the City's Code Enforcement team help reduce crime, protects the health and well-being of residents, helps maintain property values, and preserves and enhances our community for future generations.

Client Name: City of Santa Rosa
Project Location: Santa Rosa, CA
Client Contact: Maraskeshia Smith, City Manager
Client Address: 100 Santa Rosa Avenue / Santa Rosa, CA 95404
Client Phone: (707) 543-3030
Contact Email: CMOffice@SRCity.org

City of Rohnert Park

Code Enforcement, Plan Review, Inspection, Planning, Permitting, and Building Official Services

Since 2019, 4LEAF has been working with the City of Rohnert Park in several capacities including Code Enforcement, Plan Review, Inspections, Planning, Permitting, and Interim Chief Building Official to assist the community in helping its customers update their construction to maintain compliance with the current codes, especially those who did not go through a formal permitting process.



The City's Code Compliance Division works with the community to ensure that the intent of the City's Zoning, Building, and Nuisance Abatement Ordinances are consistently met. 4LEAF's goal is to help the City maintain a healthy, safe, and clean environment and preserve the quality of life for residents and businesses. 4LEAF works in partnership with the City, its citizens, and business owners to ensure the City remains safe and compliant.

We have two dedicated Code Enforcement Officers, JorDann Crawford and Jennifer Keleher, and one Senior Code Enforcement Officer, Cecilia Muela, performing services at the City on an as-needed basis. Our Code Enforcement services include:

- Working with Code Compliance Officers from the City to help with their caseload, including researching and doing background checks on a property to determine next steps.
- Performing inspections, writing inspection reports, and generating notices of violation.
- Working with other departments within the city.
- Providing direction to constituents to help them come into compliance.
- Working with the Building Department to ensure we are giving accurate information about permits.
- Working with permit technicians on open code cases.
- Data entry for compliance cases

Building Department Consulting

In addition to Code Enforcement, 4LEAF has also provided as-needed consulting services to the City of Rohnert Park's Building Division. 4LEAF has provided such services as:

- Interim Building Official Services
- Combination Building Inspection Services (Residential and Commercial)
- Off-Site Plan Checking Services
- Permit Technician Services

Client Name: City of Rohnert Park
Project Location: Rohnert Park, CA
Client Contact: Mary Grace Pawson, Development Services Director
Client Address: 130 Avram Avenue / Rohnert Park, CA 94928
Client Phone: (707) 588-2226
Contact Email: MPawson@RPCity.org

City of Newark, CA

Code Enforcement, Building Department, and Planning Department Services

Since 2016, 4LEAF has been working with the City of Newark in several capacities including Code Enforcement, Plan Review, Inspections, Interim Chief Building Official, Fire Review, Public Works, and Permitting to assist the community in helping its customers update their construction to maintain compliance with the current codes, especially those who did not go through a formal permitting process.



4LEAF provides Code Enforcement Officer Nina Hamilton to perform Code Enforcement Inspection services for the City. The City of Newark Community Preservation Division operates under the Community Development Department and is comprised of Community Preservation Specialists who are responsible for enforcing the provisions of the Newark Municipal Code and various other related codes and policies. 4LEAF assists with this endeavor while assisting with code enforcement response for a backlog of cases that remained in cue.

Building Department Consulting

In addition to Code Enforcement, 4LEAF has also provided as-needed consulting services to the City of Newark's Building Division. 4LEAF has provided such services as:

- Interim Building Official Services
- Combination Building Inspection Services (Residential and Commercial)
- On-Site Plan Checking Services
- Off-Site Plan Checking Services
- Permit Technician Services

Planning Department Consulting

4LEAF is currently providing an Associate Level Planner full-time (Waqar Shah) to the City of Newark who works seamlessly with the Planning Director and other members of the Planning Division on a number of different Planning Projects throughout the City.

Client Name: City of Newark
Project Location: Newark, CA
Client Contact: Steven Turner, Community Development Director
Client Address: 37101 Newark Blvd. / Newark, CA 94560
Client Phone: (510) 578-4330
Contact Email: StevenT@Newark.org

City of San Pablo, CA

Code Enforcement, Plan Review, Inspection Services, and Chief Building Official

For the past 4 years, 4LEAF has been working with the City of San Pablo in several different capacities including Code Enforcement, Plan Review, Inspections, and Interim Chief Building Official to assist the community in helping its customers update their construction to maintain compliance with the current codes, especially those who did not go through a formal permitting process.

Housing Program – Code Enforcement



4LEAF is currently providing inspection and project administration support services to City of San Pablo residents who have completed work without going through a formal permitting process. Through strong organization and effective communication, the community has been receptive to getting their properties up to the current codes and standards and avoiding construction hazards. Both of our Inspectors are working diligently to maintain a database of cases and track permitting progress on properties that need inspections to verify their property meets the current residential health and safety code and the current adopted California Building Codes. Our Project Administrator works both on-site and off-site coordinating, managing, and assigning inspections regarding this program.

Interim Chief Building Official

4LEAF has provided the City with an Interim Chief Building Official for more than two years in this capacity. 4LEAF's Building Official routinely performs Plan Reviews and Inspections on large commercial and important City projects.

Building Department Consulting

4LEAF provides all the inspection services for the City to include residential and commercial inspections for all trades including Building, Mechanical, Electrical, and Plumbing. 4LEAF personnel is responsible for inserting all the inspection results into the City's permitting system CRW. In addition, 4LEAF has helped manage up to 2 Permit Technicians, 1 Building Inspector, and 3 Permit Technicians.

Client Name: City of San Pablo
Project Location: San Pablo, CA
Client Contact: Charles Ching, Assistant CM
Client Address: 13831 San Pablo Ave., San Pablo
Client Phone: (510) 215-3031
Contact Email: CharlesC@SanPabloCA.GOV

County of San Benito, CA

Code Enforcement (Amnesty Program), Plan Review, Inspection, and Chief Building Official

4LEAF has been serving the County of San Benito providing as-needed Building Inspection, Code Enforcement, Plan Review, Public Works Inspections, and serving as the Interim Chief Building Official. San Benito County, located in the Coast Range Mountains, encompasses approximately 1,400 square miles with a population of more than 59,000. 4LEAF reviews and inspects several projects including several housing tracts and miscellaneous commercial projects.

Code Enforcement Services

4LEAF is currently providing Code Enforcement, Inspection, and Project Administration Support services to San Benito County residents who have completed work without going through a formal permitting process. Through strong organization and effective communication, the community has been very receptive to getting their properties up to the current codes and standards and avoiding life-safety construction hazards to the community. 4LEAF has provided as many as two Code Enforcement Officers who focus on a variety of Code Enforcement cases throughout the County.

Project Highlight – Panoche Valley Solar Project



4LEAF performed the inspections of the $1 Billion Panoche Valley Solar Project on behalf of the County of San Benito. Panoche Valley Solar, LLC (PVS) is the owner of the Panoche Valley Solar Project, located in southeastern San Benito County, California. PVS is committed to the reduction of greenhouse gases through increasing renewable energy generation and reducing the use of fossil fuels (coal and natural gas). Once complete, the project will help generate clean energy for the local community, helping California meet its renewable energy goals and responsibly protect its native environment. Construction began summer 2016 and is expected to create up to 500 direct and indirect construction jobs.

PVS has developed a precedent setting conservation plan in cooperation with biologists, conservationists, and wildlife agencies. PVS has acquired over 25,000 acres of conservation land that is critical to the recovery of regionally protected species and habitats. These conservation lands will be protected under a Conservation Easement and managed in perpetuity.

Client Name: County of San Benito
Project Location: Hollister, CA
Client Contact: Benny Young, Director
Client Address: 2901 Technology Blvd, Hollister
Client Phone: (831) 637-5313
Contact Email: BYoung@COSB.US

City of Pinole, CA

Code Enforcement, Plan Review, Inspection, and Chief Building Official

4LEAF has been working with the City of Pinole in several capacities including Plan Review, Code Enforcement Programs, Inspections, and providing an Interim Chief Building Official. These services assist the community in updating their construction to be in compliance with the current codes, especially for residents who did not go through a formal permitting process.

Housing Program – Code Enforcement



4LEAF is currently providing inspection and project administration support services to residents of the City who have completed work without going through a formal permitting process. Through strong organization and effective communication, the community has been very receptive to getting their properties up to the current codes and standards and avoiding life-safety construction hazards to the community. Both our Inspectors are working diligently to maintain a database of cases and track permitting progress on properties that need inspections to verify their property meets current residential health and safety code and the adopted California Building Codes.

Weed Abatement Program

4LEAF provides pro-active inspection support for the Weed Abatement Program during the high-fire season. Our weed abatement inspector ensures that requirements of the Weed Abatement Program are being met and provides notices as required for those properties in violation thereof.

Interim Chief Building Official

4LEAF provided the city with an Interim Chief Building Official. Lucas Chapman, CBO was with the City of Pinole on behalf of 4LEAF for more than one year. Lucas routinely performed plan reviews and inspections on large commercial and important City projects. Lucas also helped manage up to two Permit Technicians and one Building Inspector.

CRW Permitting System Automation

4LEAF recently provided the City of Pinole with Administration assistance for the upgrades to their CRW Permitting System. Our staff helped organize and administer workarounds to allow staff to successfully navigate the permitting system, integrate with other departments, and interface with the community to process permits in a reasonable time frame.

Client Name: City of Pinole
Project Location: Pinole, CA
Client Contact: Tamara Miller, Public Works Director
Client Address: 2131 Pear St, Pinole, CA 94564
Client Phone: (510) 724-9010
Contact Email: TMiller@Ci.Pinole.CA.US

County of San Mateo, CA

Second Unit Amnesty Program – Code Enforcement Services

4LEAF was selected to provide Program Management, Code Enforcement, Inspection, and Plan Review Services for the County of San Mateo residents who have completed work without going through a formal permitting process. In July 2018, 4LEAF was awarded the contract for San Mateo County's Second-Unit Amnesty Program.

In a collaborative effort to balance safety with California's desperate need for more housing, the County implemented the Amnesty Program, along with a financial loan program, to promote the legalization of unpermitted second units, bringing them up to the current codes to avoid life-safety construction hazards. Steps of the program include but are not limited to:



1. Performing the initial inspection and determines the required scope of work along with an estimate and submits the findings to the applicant and County.
2. Determining if client wishes to proceed with the Amnesty Program based on findings of the inspection report and estimated cost conformance.
3. Providing a minimum of two contractor estimates from licensed contractors.
4. County sends 4LEAF the completed application, submitted plans, agreement of timeline, and scope of work.
5. Uploading the submitted plans and documents into 4LEAF's EZPlan Review and performing the plan review with a maximum 5-day turnaround.
6. Performing the requisite inspections after permit is issued from the County. Coordinating each inspection with the contractor and the applicant through 4LEAF's Program Manager.
7. Monitoring the progress throughout the project and provides the Program Manager with updates, correction notices, and approvals. This information is uploaded and tracked in EZPlan Review portal.
8. Upon completion of the work, 4LEAF sends a letter of recommendation to the County stating an Amnesty Compliance Certificate be issued to the Applicant.

4LEAF and the County work together to maintain a database of cases and track permitting progress on properties that need inspections to verify if the property meets current residential health and safety codes and the current adopted California Building Codes.

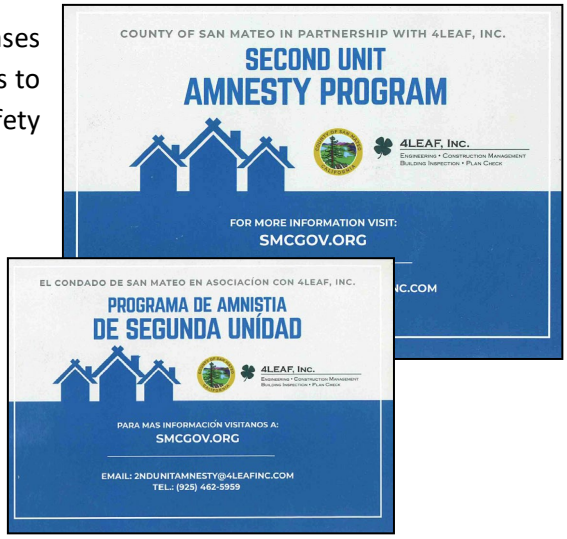

Client Name: County of San Mateo
Project Location: San Mateo, CA
Client Contact: William Gibson, Project Planner
Client Address: 555 County Center, 2nd Floor
Client Phone: (650) 363-1816
Contact Email: WGibson@SMCgov.org

2022-2023 FEE SCHEDULE & BASIS OF CHARGES

FOR THE CITY OF ROLLING HILLS

All Rates are Subject to Basis of Charges

PLAN REVIEW COST STRUCTURE	NOTES
Complete Plan Review Percentage Cost: 70% Partial Review (Structural and Non-Structural): 40% Hourly Plan Review: $140 Non-Structural Review $160 Structural Review	Fee includes: ➢ Initial review and two (2) rechecks. Hourly charges apply after three (3) or more rechecks. ➢ Shipping, courier, and electronic service.

Code Enforcement

Project Manager	$180/hour
Director of Code Enforcement	$170/hour
Senior Code Enforcement Officer	$125/hour
Code Enforcement Officer	$105/hour
Administrative Support	$80/hour

Building & Fire

Permit Manager	$120/hour
Senior Permit Technician	$100/hour
Permit Technician	$90/hour
Clerk/Administrator	$70/hour
Chief Building Official	$170/hour
Senior Combination Building Inspector (Building Inspector III)	$135/hour
Commercial Building Inspector (Building Inspector II)	$115/hour
Residential Building Inspector (Building Inspector I)	$105/hour
Civil Plan Review (Grading, Improvement Plans)	$170/hour
Structural Plan Review Engineer	$160/hour
Non-Structural Plans Examiner	$140/hour
Fire Prevention Officer	$155/hour
Fire Protection Engineer (FPE)	$205/hour
Fire Plans Examiner	$145/hour
Fire Inspector II	$125/hour
Fire Inspector I	$115/hour
Inspector of Record	$160/hour
Public Works Inspector	$155/hour
DSA Class 1 / OSHPD A Inspector	$155/hour
DSA Class 2 / OSHPD B Inspector	$115/hour
DSA Class 3 / OSHPD C Inspector	$105/hour
Certified Access Specialist (CASp)	$170/hour
GoFormz Software	$50/user monthly
Hourly overtime charge per inspector	1.5 x hourly rate
Mileage (for inspections performed within the City)	IRS Rate + 20%

Planning

Principal-in-Charge	$275/hour
Housing Policy Director	$220/hour
Planning Director	$200/hour
Principal/Planning Manager	$170/hour
Senior Planner	$155/hour
Associate Planner	$135/hour
Assistant Planner	$110/hour
Senior Planning Technician	$100/hour
Planning Technician	$90/hour

BASIS OF CHARGES – BUILDING & FIRE

Rates are inclusive of "tools of the trade" such as forms, telephones, and consumables.

- All invoicing will be submitted monthly.
- Staff Augmentation work (excluding plan review) is subject to 4-hour minimum charges unless stated otherwise. Services billed in 4-hour increments.
- Most plan reviews will be done in 10 business days or less and 5 business days or less for re-checks. This is not inclusive of holidays or the day of the pick-up of plans.
- Expedited reviews will be billed at 1.5x the plan review fee listed in the fee schedule. Return time will be within seven (7) days of receipt of the plans from the City.
- Plan review of deferred submittals & revisions will be billed at the hourly rates listed.
- All plan review services will be subject to a $250.00 minimum fee if percentage-based fee or two (2) hour minimum charge if hourly rates apply.
- Larger complex plan reviews can be negotiated to achieve the best possible pricing. 4LEAF has a proven track record of working with municipalities to provide expedited reviews with discounted pricing when applicable.
- 4LEAF assumes that these rates reflect the 2022-2023 contract period. 3% escalation for 2024-2025 and 2025-2026 is negotiable per market conditions.
- Overtime and Premium time will be charged as follows:
  - *Regular time (work begun after 5AM or before 4PM)* — *1 x hourly rate*
  - *Nighttime (work begun after 4PM or before 5AM)* — *1.125 x hourly rate*
  - *Overtime (over 8-hour M-F or Saturdays)* — *1.5 x hourly rate*
  - *Overtime (over 8 hours Sat or 1st 8-hour Sun)* — *2 x hourly rate*
  - *Overtime (over 8 hours Sun or Holidays)* — *3 x hourly rate*
- Overtime will only be billed with prior authorization of the Director or other designated City personnel.
- All work with less than 8 hours rest between shifts will be charged the appropriate overtime rate.
- Mileage driven during the course of Inspections will be charged at cost plus 20%.
- Payment due on receipt. All payments over 30 days will be assessed a 1.5% interest charge.
- Client shall pay attorneys' fees, or other costs incurred in collecting delinquent amounts.
- Client agrees that 4LEAF's liability will be limited to the value of services provided.

BASIS OF CHARGES – PUBLIC WORKS

- Rates shown assume the projects will require compliance with California Prevailing Wage rate requirements and assumes the Client will be filing a PWC-100 Form to the California Department of Industrial Relations (DIR) for the projects.
- Rates for prevailing wage categories are subject to annual escalations in accordance with the bi-annual wage determinations from the California DIR.
- Per the new requirements being enforced under SB 854 and because it is assumed that a PWC-100 Form will be filed by the Client to the CA DIR for each project, 4LEAF is required to notify an authorized Apprenticeship Committee through submittal of a DAS-140 form. We are then required to make an official request to an authorized Apprenticeship Committee for an apprentice by submitting a DAS-142 form. We are not assured the apprenticeship committee will be able to provide a suitable / qualified apprentice for the project. Per the apprenticeship requirements, the hours worked by the apprentice must be in a ratio of 1:5 for apprentice to journeyman hours. 4LEAF will not know the labor classification of the Public Works Apprentice until an Apprentice is dispatched to the site; therefore, the rates for the five Periods listed under the California DIR's Wage determination for Building Construction Inspector were used to determine the range of hourly rates for Public Works Inspector Apprentice.
- Pre-approved Overtime and Premium hours for labor categories subject to Prevailing Wage requirements will be charged per the following:

- *Nighttime (work begun after 4PM or before 5AM)*	*1.125 x hourly rate*
- *Overtime (over 8 hour M-F or Saturdays)*	*1.35 x hourly rate*
- *Overtime (over 8 hours Sat or 1st 8 hour Sun)*	*1.85 x hourly rate*
- *Overtime (over 8 hours Sun or Holidays)*	*2.35 x hourly rate*

- All invoicing will be submitted monthly.
- All work with less than 8 hours rest between shifts will be charged the appropriate overtime rate.
- Subconsultant Invoices will be assessed a 10% Administrative Processing Fee.
- Project-related mileage for inspections will be billed at the allowable IRS Rate.
- Payment due on receipt. All payments over 30 days will be assessed a 1.5% interest charge.
- Client shall pay attorneys' fees, or other costs incurred in collecting delinquent amounts.
- Client agrees that 4LEAF's liability will be limited to the value of services provided.

City of Rolling Hills INCORPORATED JANUARY 24, 1957

Agenda Item No.: 14.A
Mtg. Date: 01/09/2023

TO: **HONORABLE MAYOR AND MEMBERS OF THE CITY COUNCIL**

FROM: **JOHN SIGNO, DIRECTOR OF PLANNING & COMMUNITY SERVICES**

THRU: **ELAINE JENG P.E., CITY MANAGER**

SUBJECT: **FIRE FUEL ABATEMENT AND CODE ENFORCEMENT QUARTERLY REPORT FOR THE FOURTH QUARTER OF 2022 (OCTOBER 1 THROUGH DECEMBER 31)**

DATE: **January 09, 2023**

BACKGROUND:
The Code Enforcement division provides quarterly updates on fuel abatement cases which consist of active and closed cases. The attachments show active and closed cases consisting of dead vegetation and other code violations for the fourth quarter of 2022. Also included is a list of open cases.

DISCUSSION:
During the fourth quarter of 2022, there were a total of 24 cases closes, including 20 dealing with vegetation or dead trees; 17 cases were opened, including 8 involving vegetation or dead trees. In total, code enforcement is working on 19 open cases, of which 6 deal with vegetation or dead trees.

Willdan Engineering has been providing code enforcement services since March 2022. The contract with Willdan Engineering terminated on December 31, 2022. Last month, Willdan Engineering was focused on closing cases and opened very few cases. Enforcement on dead vegetation has slowed during the winter months because deciduous trees lose their leaves and identifying a dormant tree from a dead tree can be difficult. Currently, code enforcement is being handled internally until a replacement is found. Enforcement on vegetation should increase in warmer months when dead trees are easier to identify and a new code enforcement officer is on board.

The Code Enforcement Division is continuing to use iWorQ to generate quarterly updates and track code enforcement and fire fuel abatement cases. Those reports are attached.

FISCAL IMPACT:
Code enforcement services is provided contractually and payment is made from the General Fund.

RECOMMENDATION:
Receive and file.

ATTACHMENTS:
CE_QRP_2022_Q4_Opened_Cases.pdf
CE_QRP_2022_Q4_Closed_Cases.pdf
CE_QRP_2022_Q4_Cumulative_Open_Cases.pdf

City of Rolling Hills INCORPORATED JANUARY 24, 1957
2 PORTUGUESE BEND ROAD ROLLING HILLS, CA 90274
(310) 377-1521 WWW.ROLLING-HILLS.ORG

4th Qtr. 2022 Opened Cases

10/01/2022 - 12/31/2022

Case Opened	Address of Violation	Description	Status
12/27/2022	52 Portuguese Bend Rd	Unpermitted Construction	Open
12/13/2022	21 Portuguese Bend Rd	Broken Fence	Open
12/8/2022	4 Possum Ridge Rd	Dead tree	Closed
11/8/2022	69 Portuguese Bend Rd	Unpermitted structure (chicken coop) built w/o approval and permits	Open
11/7/2022	12 Ringbit Road East	Bathroom remodel without permits; C&D permit required	Open
11/3/2022	20 Chuckwagon Road	New Retaining Wall without Permits, Dead Pine Tree.	Open
11/1/2022	2950 Palos Verdes Drive	Dry Noxious Growths and Trash	Open
10/27/2022	28 Chuckwagon Road	Dead Tree in Rear Yard	Closed
10/12/2022	64 Portuguese Bend Road	Large event with lights and music	Open
10/20/2022	74 Portuguese, CA	Complaint of lights and blue car with trailer parked on the property.	Closed
10/18/2022	2 Possum Ridge	Complaint of 2-3 bright lights on the property.	Closed
10/13/2022	7 Crest Road West	Exploratory borings without permit; Excavation, Soil Testing	Closed
10/4/2022	15 Upper Blackwater Canyon Rd	Dead Trees & Discarded Tree Trimmings	Open
10/4/2022	0 Pine Tree Ln	Dead/Dry Brush	Closed
10/4/2022	5 Pine Tree Ln	Dead/dry brush.	Closed
10/4/2022	7 Pine Tree Ln	Dead Tree	Closed
10/4/2022	APN7569-013-018 (Pine Tree Ln.)	Dead tree and discarded tree branches.	Closed

Total Records: 17 **1/4/2023**

City of Rolling Hills INCORPORATED JANUARY 24, 1957
2 PORTUGUESE BEND ROAD ROLLING HILLS, CA 90274
(310) 377-1521 WWW.ROLLING-HILLS.ORG

4th Qtr. 2022 Closed Cases

10/01/2022 - 12/31/2022

Case Opened	Address of Violation	Description	Status	Case Closed
12/8/2022	4 Possum Ridge Rd	Dead tree	Closed	12/27/2022
11/7/2022	12 Ringbit Road East	Bathroom remodel without permits; C&D permit required	Closed	12/21/2022
8/30/2022	3 Eastfield Dr	Dead Tree	Closed	12/13/2022
9/20/2022	6 Possum Ridge Rd	Dead Tree	Closed	12/8/2022
10/4/2022	0 Pine Tree Ln	Dead/Dry Brush	Closed	12/6/2022
10/4/2022	5 Pine Tree Ln	Dead/dry brush.	Closed	12/6/2022
9/22/2022	11 Middleridge Ln S	Dead/diseased vegetation	Closed	12/6/2022
8/25/2022	23 Crest Road East	Dead Tree	Closed	12/6/2022
9/20/2022	1 Crest Rd W	Dead Trees	Closed	12/1/2022
10/4/2022	7 Pine Tree Ln	Dead Tree	Closed	11/29/2022
9/20/2022	1 Morgan Ln	Dead Tree	Closed	11/29/2022
9/20/2022	27 Buggy Whip Dr	Dead Tree	Closed	11/29/2022
9/20/2022	20 Buggy Whip Dr	Dead Vegetation	Closed	11/29/2022
8/30/2022	1 Eastfield Dr.	Dead Vegetation	Closed	11/29/2022
10/4/2022	APN: 7569-013-018	Dead tree and discarded tree branches.	Closed	11/22/2022
9/22/2022	2 Acacia Ln.	Dead shrubs/vegetation	Closed	11/22/2022
9/22/2022	15 Middleridge Ln N	Dead/dry palm fronds.	Closed	11/22/2022
10/27/2022	28 Chuckwagon Road	Dead Tree in Rear Yard	Closed	11/18/2022
9/20/2022	8 Buggy Whip Dr	Damaged Fence & Dead Vegetation	Closed	11/3/2022
10/13/2022	7 Crest Road West	Exploratory borings without permit; Excavation, Soil Testing	Closed	11/2/2022
8/11/2022	16 Buggy Whip Drive	Trees in violation of condition	Closed	11/2/2022
9/6/2022	6 Morgan Ln.	Dead/Discarded Vegetation (Trimmings)	Closed	11/1/2022
10/20/2022	74 Portuguese, CA	Complaint of lights and blue car with trailer parked on the property.	Closed	10/25/2022
10/18/2022	2 Possum Ridge	Complaint of 2-3 bright lights on the property.	Closed	10/25/2022

Total Records: 24 **1/4/2023**

City of Rolling Hills INCORPORATED JANUARY 24, 1957
2 PORTUGUESE BEND ROAD ROLLING HILLS, CA 90274
(310) 377-1521 WWW.ROLLING-HILLS.ORG

Cumulative Open Cases

Cumulative Open Cases

Case Opened	Address of Violation	Description	Status
12/27/2022	52 Portuguese Bend Rd.	Unpermitted Construction	Open
12/13/2022	21 Portuguese Bend Rd	Broken Fence	Open
11/8/2022	69 Portuguese Bend Rd	Unpermitted structure (chicken coop) built w/o approval and permits	Open
11/3/2022	20 Chuckwagon Road	New Retaining Wall without Permits, Dead Pine Tree.	Open
11/1/2022	2950 Palos Verdes Drive	Dry Noxious Growths and Trash	Open
10/12/2022	64 Portuguese Bend Road	Large event with lights and music	Open
10/4/2022	15 Upper Blackwater Canyon Rd	Dead Trees & Discarded Tree Trimmings	Open
9/22/2022	29 Middleridge Ln S	Extensive grading and importing of soil. Dead shrubs/trees/vegetation on the property (visible from the road).	Open
8/16/2022	24 Portuguese Bend Road	Dead Trees	Open
8/16/2022	1 Sagebrush Lane	Dead Trees	Open
7/7/2022	7 Crest Rd. West	Unpermitted construction to the interior of resident	Open
6/9/2022	4 Spur Ln	Dead/Dry vegetation	Open
5/17/2022	5 Sagebrush Ln	Unpermitted Construction	Open
11/23/2021	2 Acacia Lane	Unpermitted replacement of roof on guest house, unpermitted demolition of pool deck, and no C&D permit.	Open
7/6/2021	1 Chestnut Lane	Illegal structure, CUP/SPR needed	Open
6/3/2021	1 Hackamore Road	Illegal construction, unpermitted.	Open
4/21/2021	2 Buggy Whip Drive	broken fence and trash	Open
6/24/2020	61 Eastfield Drive	Grading and Drainage	Open
3/11/2020	2950 Palos Verdes Drive	Expired Permit	Open

Total Records: 19 **1/4/2023**