City of Rolling Hills INCORPORATED JANUARY 24, 1957

2 PORTUGUESE BEND ROAD
ROLLING HILLS, CA 90274
(310) 377-1521

AGENDA | **CITY COUNCIL** | **CITY OF ROLLING HILLS**
Regular City Council Meeting | **Monday, April 14, 2025** | **7:00 PM**

The meeting agenda is available on the City's website. The City Council meeting will be live-streamed on the City's website. Both the agenda and the live-streamed video can be found here:
https://www.rolling-hills.org/government/agenda/index.php

Members of the public may submit written comments in real-time by emailing the City Clerk's office at cityclerk@cityofrh.net. Your comments will become part of the official meeting record. You must provide your full name, but please do not provide any other personal information that you do not want to be published.

Recordings to City Council meetings can be found here: https://www.rolling-hills.org/government/agenda/index.php

Next Resolution No. 1388 *Next Ordinance No. 386*

1. CALL TO ORDER

2. ROLL CALL

3. PLEDGE OF ALLEGIANCE

4. PRESENTATIONS/PROCLAMATIONS/ANNOUNCEMENTS

5. APPROVE ORDER OF THE AGENDA

This is the appropriate time for the Mayor or Councilmembers to approve the agenda as is or reorder.

6. BLUE FOLDER ITEMS (SUPPLEMENTAL)

Blue folder (supplemental) items are additional back up materials to administrative reports, changes to the posted agenda packet, and/or public comments received after the printing and distribution of the agenda packet for receive and file.

7. PUBLIC COMMENT ON NON-AGENDA ITEMS

*This is the appropriate time for members of the public to make comments regarding items**not** listed on this agenda. Pursuant to the Brown Act, no action will take place on any items not on the agenda.*

8. CONSENT CALENDAR

Business items, except those formally noticed for public hearing, or those pulled for discussion are assigned to the Consent Calendar. The Mayor or any Councilmember may request that any Consent Calendar item(s) be removed, discussed, and acted upon separately. Items removed from the Consent Calendar will be taken up under the "Excluded Consent Calendar" section below. Those items remaining on the Consent Calendar will be approved in one motion. The Mayor will call on anyone wishing to address the City Council on any Consent Calendar item on the agenda, which has not been pulled by Councilmembers for discussion.

8.A. APPROVE AFFIDAVIT OF POSTING FOR THE CITY COUNCIL REGULAR MEETING OF APRIL14, 2025

RECOMMENDATION: Approve.
CL_AGN_250414_CC_AffidavitofPosting.pdf

8.B. APPROVE MOTION TO READ BY TITLE ONLY AND WAIVE FURTHER READING OF ALL ORDINANCES AND RESOLUTIONS LISTED ON THE AGENDA
RECOMMENDATION: Approve.

8.C. APPROVE THE FOLLOWING CITY COUNCIL MINUTES: MARCH 24, 2025 REGULAR MEETING
RECOMMENDATION: Approve as presented.
CL_MIN_250324_CC_F.pdf

8.D. PAYMENT OF BILLS
RECOMMENDATION: Approve as presented.
CL_AGN_250414_CC_PaymentOfBills_F_E.pdf

8.E. ADOPT RESOLUTION NO. 1387, A RESOLUTION OF THE CITY COUNCIL OF THE CITY OF ROLLING HILLS. CALIFORNIA AUTHORIZING A FISCAL YEAR 2024-2025 BUDGET MODIFICATION TO INCREASE APPROPRIATIONS BY $236,969 IN FUND 16 FUNDED FROM A COMBINATION OF GRANT REVENUES AND RULE 20A CREDITS FOR PROVIDING ENGINEERING AND ENVIRONMENTAL MONITORING SERVICES WITHIN THE 20B PORTION OF THE EASTFIELD DRIVE AND THE CREST ROAD EAST FIRE PREVENTION POWER LINE UNDERGROUNDING PROJECTS
RECOMMENDATION: Approve as presented.
ResolutionNo1387_EastfieldDrive20B_Eng_Env_BudgetAmendment_F.pdf

9. EXCLUDED CONSENT CALENDAR ITEMS

10. COMMISSION ITEMS

11. PUBLIC HEARINGS

12. OLD BUSINESS

13. NEW BUSINESS

13.A. CONSIDERATION OF AWARDING A CONSTRUCTION CONTRACT TO FIDELITY BUILDERS, INC. FOR PROVIDING CONSTRUCTION SERVICES ON THE TENNIS COURT ADA IMPROVEMENT PROJECT IN AN AMOUNT NOT-TO-EXCEED $770,396, AUTHORIZE THE CITY MANAGER TO EXECUTE THE AGREEMENT, AND FINDING THE PROJECT CATEGORICALLY EXEMPT FROM THE CALIFORNIA ENVIRONMENTAL QUALITY ACT
RECOMMENDATION: Approved as presented
CL_BID_250218_2025-01_FidelityBuildersInc..pdf
CL_BID_250218_2025-01_RAMSAConstruction.pdf
CL_BID_250218_2025-01_USBuilders&Consultants.pdf
CL_BID_250113_2025-01_TC_ADA_Project_BidBreakdownForm_Analysis.pdf
CL_BID_250107_2025-01_TC_ADA_Project_F_WithAttachments.pdf

CL_PBN_250113_NOB_2025-01_TC_ADA_Affidavit.pdf
CA_AGR_250414_FidelityBuildersInc_TC-ADA_2025-01_D.pdf

14. MATTERS FROM THE CITY COUNCIL

15. MATTERS FROM STAFF

15.A. RECEIVE AND FILE A PUBLIC SAFETY AND EMERGENCY PREPAREDNESS UPDATE
RECOMMENDATION: Receive and file.
Attachment A - CL_AGN_CC_250310_CC_15A_Matters_Staff_PublicSafety.pdf

15.B. CONSIDERATION OF A JOINT PENINSULA CITIES LETTER TO GOVERNOR GAVIN NEWSOM REQUESTING A MORATORIUM ON HOUSING LEGISLATION THAT CREATE FURTHER DENSITY IN CALFIRE-DESIGNATED VERY HIGH FIRE HAZARD SEVERITY ZONES
RECOMMENDATION: Approve as presented.
CL_AGN_250414_CC_PVP_HousingLetter_F_PE.pdf

16. RECESS TO CLOSED SESSION

16.A. EXISTING LITIGATION - GOVERNMENT CODE SECTION 54956.9(D)(1)THE CITY FINDS, BASED ON ADVICE FROM LEGAL COUNSEL, THAT DISCUSSION IN OPEN SESSION WILL PREJUDICE THE POSITION OF THE CITY IN THE LITIGATION. (1 CASE) a. NAME OF CASE: CONNIE ANDERSEN, ET AL. V. CALIFORNIA WATER COMPANY, ET AL. (SEAVIEW CASE) CASE NO.: 24STCV20953
RECOMMENDATION: None.

16.B. CONFERENCE WITH LEGAL COUNSEL - EXISTING LITIGATION GOVERNMENT CODE SECTION 54956.9 (TWO CASES) CPUC COMPLAINTS AGAINST SOUTHERN CALIFORNIA EDISON AND SOCAL GAS
RECOMMENDATION: None.

16.C. CONFERENCE WITH LEGAL COUNSEL - INITIATION OF LITIGATION GOVERNMENT CODE SECTION 54956.9(D)(1) THE CITY FINDS, BASED ON ADVICE FROM LEGAL COUNSEL, THAT DISCUSSION IN OPEN SESSION WILL PREJUDICE THE POSITION OF THE CITY IN THE LITIGATION. (1 CASE)
RECOMMENDATION: None.

16.D. PUBLIC EMPLOYEE PERFORMANCE EVALUATION PURSUANT TO GOVERNMENT CODE SECTION 54957 TITLE: CITY ATTORNEY
RECOMMENDATION: None.

17. RECONVENE TO OPEN SESSION

18. ADJOURNMENT
Next regular meeting: Monday, April 28, 2025 at 7:00 p.m. in the City Council Chamber, Rolling Hills City Hall, 2 Portuguese Bend Road, Rolling Hills, California, 90274.

Notice:

Public Comment is welcome on any item prior to City Council action on the item.

Documents pertaining to an agenda item received after the posting of the agenda are available for review in the City Clerk's office or at the meeting at which the item will be considered.

In compliance with the Americans with Disabilities Act (ADA), if you need special assistance to participate in this meeting due to your disability, please contact the City Clerk at (310) 377-1521 at least 48 hours prior to the meeting to enable the City to make reasonable arrangements to ensure accessibility and accommodation for your review of this agenda and attendance at this meeting.

City of Rolling Hills INCORPORATED JANUARY 24, 1957

Agenda Item No.: 8.A
Mtg. Date: 04/14/2025

TO: **HONORABLE MAYOR AND MEMBERS OF THE CITY COUNCIL**

FROM: **CHRISTIAN HORVATH, CITY CLERK / EXECUTIVE ASSISTANT TO CITY MANAGER**

THRU: **KARINA BAÑALES, CITY MANAGER**

SUBJECT: **APPROVE AFFIDAVIT OF POSTING FOR THE CITY COUNCIL REGULAR MEETING OF APRIL14, 2025**

DATE: **April 14, 2025**

BACKGROUND:
None.

DISCUSSION:
None.

FISCAL IMPACT:
None.

RECOMMENDATION:
Approve.

ATTACHMENTS:
CL_AGN_250414_CC_AffidavitofPosting.pdf

Administrative Report

8.A., **File #** 2722 **Meeting Date**: 4/14/2025

To: MAYOR & CITY COUNCIL

From: Christian Horvath, City Clerk

TITLE

APPROVE AFFIDAVIT OF POSTING FOR THE CITY COUNCIL ADJOURNED REGULAR MEETING OF APRIL 14, 2025

EXECUTIVE SUMMARY

STATE OF CALIFORNIA)
COUNTY OF LOS ANGELES) SS
CITY OF ROLLING HILLS)

AFFIDAVIT OF POSTING

In compliance with the Brown Act, the following materials have been posted at the locations below.

Legislative Body	City Council
Posting Type	Regular Meeting Agenda
Posting Location	2 Portuguese Bend Road, Rolling Hills, CA 90274 City Hall Window City Website: https://www.rolling-hills.org/government/agenda/index.php https://www.rolling-hills.org/government/city_council/city_council_archive_agendas/index.php
Meeting Date & Time	APRIL 14, 2025 7:00pm Open Session

As City Clerk of the City of Rolling Hills, I declare under penalty of perjury, the document noted above was posted at the date displayed below.

Christian Horvath, City Clerk

Date: April 11, 2025

City of Rolling Hills INCORPORATED JANUARY 24, 1957

Agenda Item No.: 8.B
Mtg. Date: 04/14/2025

TO: **HONORABLE MAYOR AND MEMBERS OF THE CITY COUNCIL**

FROM: **CHRISTIAN HORVATH, CITY CLERK / EXECUTIVE ASSISTANT TO CITY MANAGER**

THRU: **KARINA BAÑALES, CITY MANAGER**

SUBJECT: **APPROVE MOTION TO READ BY TITLE ONLY AND WAIVE FURTHER READING OF ALL ORDINANCES AND RESOLUTIONS LISTED ON THE AGENDA**

DATE: **April 14, 2025**

BACKGROUND:
None.

DISCUSSION:
None.

FISCAL IMPACT:
None.

RECOMMENDATION:
Approve.

ATTACHMENTS:

Agenda Item No.: 8.C
Mtg. Date: 04/14/2025

TO: **HONORABLE MAYOR AND MEMBERS OF THE CITY COUNCIL**

FROM: **CHRISTIAN HORVATH, CITY CLERK / EXECUTIVE ASSISTANT TO CITY MANAGER**

THRU: **KARINA BAÑALES, CITY MANAGER**

SUBJECT: **APPROVE THE FOLLOWING CITY COUNCIL MINUTES: MARCH 24, 2025 REGULAR MEETING**

DATE: **April 14, 2025**

BACKGROUND:
None.

DISCUSSION:
None.

FISCAL IMPACT:
None.

RECOMMENDATION:
Approve as presented.

ATTACHMENTS:
CL_MIN_250324_CC_F.pdf

Minutes
Rolling Hills City Council
Monday, March 24, 2025
Regular Meeting 7:00 p.m.

1. CALL TO ORDER

The City Council of the City of Rolling Hills met in person on the above date at 7:00 p.m. Mayor Pieper presiding.

2. ROLL CALL

Councilmembers Present:	Mirsch, Wilson, Dieringer, Mayor Pieper
Councilmembers Absent:	Black
Staff Present:	Karina Bañales, City Manager
	Christian Horvath, City Clerk / Executive Assistant to the City Manager
	Samantha Crew, Management Analyst
	Lisa Edwards, Willdan Consultant Principal Planner
	Robert Samario, Finance Operations Lead Consultant
	Pat Donegan, City Attorney

3. PLEDGE OF ALLEGIANCE – Management Analyst Crew

4. PRESENTATIONS / PROCLAMATIONS / ANNOUNCEMENTS – NONE

5. APPROVE ORDER OF THE AGENDA

Motion by Councilmember Wilson, seconded by Councilmember Mirsch to approve the order of the agenda. Motion carried unanimously with the following vote:

AYES:	Mirsch, Wilson, Dieringer, Mayor Pieper
NOES:	None
ABSENT:	Black

Councilmember Black arrived at 7:01 p.m.

6. BLUE FOLDER ITEMS (SUPPLEMENTAL)

Motion by Councilmember Wilson, seconded by Councilmember Mirsch to receive and file Blue Folder Items 13A and 13H. Motion carried unanimously with the following vote:

AYES:	Mirsch, Wilson, Black, Dieringer, Mayor Pieper
NOES:	None
ABSENT:	None

7. PUBLIC COMMENT ON NON-AGENDA ITEMS – NONE

8. CONSENT CALENDAR

8.A. APPROVE AFFIDAVIT OF POSTING FOR THE CITY COUNCIL REGULAR MEETING OF MARCH 24, 2025

8.B. APPROVE MOTION TO READ BY TITLE ONLY AND WAIVE FURTHER READING OF ALL ORDINANCES AND RESOLUTIONS LISTED ON THE AGENDA

8.C. APPROVE THE FOLLOWING CITY COUNCIL MINUTES: MARCH 10, 2025 REGULAR MEETING

8.D. PAYMENT OF BILLS

8.E. REPUBLIC SERVICES RECYCLING TONNAGE AND COMPLAINT REPORTS FOR FEBRUARY 2025

8.F. APPROVE THE FOLLOWING FINANCE, BUDGET, AND AUDIT COMMITTEE MINUTES: MARCH 10, 2025 SPECIAL MEETING

8.G. RECEIVE AND FILE THE ANNUAL PROGRESS REPORTS FOR THE GENERAL PLAN

8.H. RECEIVE AND FILE THE ANNUAL PROGRESS REPORT FOR THE HOUSING ELEMENT

Mayor Pro Tem Dieringer asked questions regarding ADU's on Item 8G. Clarifying answers were provided by Willdan Consultant Principal Planner Edwards and City Attorney Donegan.

Motion by Councilmember Black, seconded by Councilmember Mirsch to approve the Consent Calendar. Motion carried unanimously with the following vote:

AYES: Mirsch, Wilson, Black, Dieringer, Mayor Pieper
NOES: None
ABSENT: None

9. EXCLUDED CONSENT CALENDAR ITEMS – NONE

10. COMMISSION ITEMS

10.A. RECEIVE AND FILE ZONING CASE NO. 24-078: VARIANCE FOR A DETACHED GARAGE WITHIN THE FRONT YARD AREA, CONDITIONAL USE PERMIT REQUEST TO EXCEED 200 SQUARE FEET FOR ACCESSORY STRUCTURES, AND SITE PLAN REVIEW FOR AN EXPANSION TO THE EXISTING DETACHED GARAGE AND FINDING THE PROJECT CATEGORICALLY EXEMPT FROM THE CALIFORNIA ENVIRONMENTAL QUALITY ACT LOCATED 1 PINTO ROAD (36-FT) (KRAMER)

Councilmember Wilson recused himself from the item due to his residence being in proximity to the applicant and left the dais at 7:12 p.m.

Presentation by Willdan Consultant Principal Planner Edwards

Motion by Councilmember Black, seconded by Councilmember Mirsch to receive and file. Motion carried unanimously with the following vote:

AYES: Mirsch, Black, Dieringer, Mayor Pieper
NOES: None
ABSENT: Wilson

Councilmember Wilson returned to the dais at 7:22 p.m.

11. PUBLIC HEARINGS – NONE

12. OLD BUSINESS – NONE

13. NEW BUSINESS

13.A. PRELIMINARY FISCAL YEAR 2025/26 PROJECTIONS AND BALANCING FOR THE GENERAL FUND

Presentation by Finance Operations Lead Consultant Samario

Motion by Councilmember Mirsch, seconded by Councilmember Wilson to properly notice the Prop 218 Public Hearing for the proposed Fiscal Year 2025/26 refuse increase. Motion carried unanimously with the following vote:

AYES: Mirsch, Wilson, Black, Dieringer, Mayor Pieper
NOES: None
ABSENT: None

Motion by Councilmember Black, seconded by Mayor Pieper to receive and file. Motion carried unanimously with the following vote:

AYES: Mirsch, Wilson, Black, Dieringer, Mayor Pieper
NOES: None
ABSENT: None

Motion by Mayor Pieper, seconded by Councilmember Mirsch to have Mayor Pro Tem Dieringer work with the City Manager and other cities on drafting a letter to the Board of Supervisors regarding the Los Angeles County Sherriff Department's staffing shortage. Motion carried unanimously with the following vote:

AYES: Mirsch, Wilson, Black, Dieringer, Mayor Pieper
NOES: None
ABSENT: None

13.B. RECEIVE AN UPDATE ON THE EMERGENCY OUTDOOR SIREN NOTIFICATION SYSTEM PROJECT AND STANDARD OPERATING PROCEDURES

Presentation by Management Analyst Crew
HQE representatives Charles West and Nancho Lopez

Motion by Mayor Pieper, seconded by Councilmember Mirsch to have residents purchase SAFE units as desired directly through HQE. Motion carried with the following vote:

AYES: Mirsch, Wilson, Dieringer, Mayor Pieper
NOES: Black
ABSENT: None

Motion by Councilmember Black, seconded by Councilmember Mirsch to receive and file. Motion carried unanimously with the following vote:

AYES: Mirsch, Wilson, Black, Dieringer, Mayor Pieper
NOES: None
ABSENT: None

13.C. APPROVE A TRANSITION TO CIVICPLUS AGENDA MEETING AND MANAGEMENT SYSTEM AND AUTHORIZE THE CITY MANAGER TO EXECUTE A PROFESSIONAL SERVICES AGREEMENT FOR A 3-YEAR TERM

Presentation by City Clerk / Executive Assistant to the City Manager Horvath

Public Comment: Melissa McNabb

Motion by Councilmember Black, seconded by Councilmember Mirsch to approve as presented. Motion carried unanimously with the following vote:

AYES: Mirsch, Wilson, Black, Dieringer, Mayor Pieper
NOES: None
ABSENT: None

13.D. CONSIDER AND APPROVE A PROFESSIONAL SERVICES AGREEMENT WITH GPA CONSULTING TO PROVIDE ENVIRONMENTAL CONSULTING SERVICES FOR THE EASTFIELD DRIVE FIRE PREVENTION POWER LINE UNDERGROUNDING PROJECT IN AN AMOUNT NOT TO EXCEED $117,070 FUNDED BY FEDERAL EMERGENCY MANAGEMENT AGENCY (FEMA) HAZARD MITIGATION PROGRAM #DR4382-177-7R-CA, AUTHORIZE THE CITY MANAGER TO EXECUTE THE AGREEMENT, AND FINDING THE PROJECT CATEGORICALLY EXEMPT FROM THE CALIFORNIA ENVIRONMENTAL QUALITY ACT

Presentation by City Clerk / Executive Assistant to the City Manager Horvath

Public Comment: Judith Haenel

Motion by Councilmember Mirsch, seconded by Councilmember Wilson to approve as presented. Motion carried with the following vote:

AYES: Mirsch, Wilson, Dieringer, Mayor Pieper
NOES: Black
ABSENT: None

13.E. CONSIDER AND APPROVE A PROFESSIONAL SERVICES AGREEMENT WITH RYAN ECOLOGICAL CONSULTING TO PROVIDE ENVIRONMENTAL CONSULTING SERVICES FOR THE 20C PORTION OF THE CREST ROAD EAST FIRE PREVENTION POWER LINE UNDERGROUNDING PROJECT IN AN AMOUNT NOT TO EXCEED $2,000 FUNDED BY FEDERAL EMERGENCY MANAGEMENT AGENCY (FEMA) HAZARD MITIGATION PROGRAM #DR4344-PJ0526, AUTHORIZE THE CITY MANAGER TO EXECUTE THE AGREEMENT, AND FINDING THE PROJECT CATEGORICALLY EXEMPT FROM THE CALIFORNIA ENVIRONMENTAL QUALITY ACT

Presentation by City Clerk / Executive Assistant to the City Manager Horvath

Motion by Councilmember Mirsch, seconded by Mayor Pro Tem Dieringer to approve as presented. Motion carried unanimously with the following vote:

AYES: Mirsch, Wilson, Black, Dieringer, Mayor Pieper
NOES: None
ABSENT: None

13.F. ADOPT RESOLUTION NO. 1386 APPROVING THE BLANKET AUTHORITY TO FILE APPLICATIONS FOR GRANT FUNDS FROM THE LOS ANGELES COUNTY REGIONAL PARK AND OPEN SPACE DISTRICT FOR MEASURE A FUNDING FOR PROJECTS AND PROGRAMS AND AUTHORIZE THE CITY MANAGER TO SIGN THE MASTER ANNUAL ALLOCATION GRANT AGREEMENT WITH THE LOS ANGELES COUNTY REGIONAL PARK AND OPEN SPACE DISTRICT

Presentation by City Clerk / Executive Assistant to the City Manager Horvath

Motion by Mayor Pro Tem Dieringer, seconded by Councilmember Black to approve as presented. Motion carried unanimously with the following vote:

AYES: Mirsch, Wilson, Black, Dieringer, Mayor Pieper
NOES: None
ABSENT: None

13.G. APPROVE A LETTER OF SUPPORT FOR ROLLING HILLS ESTATE'S' GEORGE F CANYON NATURE CENTER PROJECT

Presentation by City Clerk / Executive Assistant to the City Manager Horvath

Motion by Councilmember Black, seconded by Mayor Pro Tem Dieringer to approve as presented. Motion carried unanimously with the following vote:

AYES: Mirsch, Wilson, Black, Dieringer, Mayor Pieper
NOES: None
ABSENT: None

13.H. APPROVE A LETTER OF SUPPORT FOR FEDERAL EARMARK REQUESTS BY THE CITY OF RANCHO PALOS VERDES FOR A REGIONAL EMERGENCY OPERATIONS CENTER AND MAINTENANCE OF DEEP DEWATERING WELLS IN THE PORTUGUESE BEND LANDSLIDE AREA

Presentation by City Manager Bañales

Motion by Councilmember Black, seconded by Councilmember Mirsch to approve as presented. Motion carried unanimously with the following vote:

AYES: Mirsch, Wilson, Black, Dieringer, Mayor Pieper
NOES: None
ABSENT: None

14. MATTERS FROM THE CITY COUNCIL – NONE

15. MATTERS FROM STAFF

15.A. UPDATE ON THE CITY HALL ADA IMPROVEMENT PROJECT AND REQUEST FOR DIRECTION

Presentation by City Clerk / Executive Assistant to the City Manager Horvath
City Manager Bañales

Public Comment: Melissa McNabb

Motion by Councilmember Black, seconded by Councilmember Wilson to not pursue Option 2 as presented, an amendment with Pacific Architecture and Engineering. Motion carried unanimously with the following vote:

AYES: Mirsch, Wilson, Black, Dieringer, Mayor Pieper
NOES: None
ABSENT: None

Motion by Mayor Pieper, seconded by Councilmember Black to table the Item and further discussion of Options 1 or 3. Motion carried unanimously with the following vote:

AYES: Mirsch, Wilson, Black, Dieringer, Mayor Pieper
NOES: None
ABSENT: None

Councilmember Black left the dais at 9:35 p.m.

15.B. CONSIDERATION OF PARTICIPATING IN A THIRD ANNUAL ARBOR DAY EVENT AT THE CITY HALL CAMPUS ON APRIL 25, 2025

Presentation by City Clerk / Executive Assistant to the City Manager Horvath

Public Comment: Judith Haenel

Motion by Mayor Pro Tem Dieringer, seconded by Councilmember Mirsch to receive and file and hold a publicized Arbor Day event with Bennett Landscape. Motion carried unanimously with the following vote:

AYES: Mirsch, Wilson, Dieringer, Mayor Pieper
NOES: None
ABSENT: Black

16. RECESS TO CLOSED SESSION – 9:40 P.M.

16.A. EXISTING LITIGATION - GOVERNMENT CODE SECTION 54956.9(D)(1) THE CITY FINDS, BASED ON ADVICE FROM LEGAL COUNSEL, THAT DISCUSSION IN OPEN SESSION WILL PREJUDICE THE POSITION OF THE CITY IN THE LITIGATION. (1 CASE) a. NAME OF CASE: CONNIE ANDERSEN, ET AL. V. CALIFORNIA WATER COMPANY, ET AL. (SEAVIEW CASE) CASE NO.: 24STCV20953

16.B. CONFERENCE WITH LEGAL COUNSEL - EXISTING LITIGATION GOVERNMENT CODE SECTION 54956.9 (2 CASES) CPUC COMPLAINTS AGAINST SOTHERN CALIFORNIA EDISON AND SOCAL GAS

16.C. CONFERENCE WITH LEGAL COUNSEL - INITIATION OF LITIGATION GOVERNMENT CODE SECTION 54956.9(D)(1) THE CITY FINDS, BASED ON ADVICE FROM LEGAL COUNSEL, THAT DISCUSSION IN OPEN SESSION WILL PREJUDICE THE POSITION OF THE CITY IN THE LITIGATION. (1 CASE)

17. RECONVENE TO OPEN SESSION – 10:04 P.M.

18. ADJOURNMENT: 10:04 P.M.

The meeting was adjourned at 10:04 p.m. on March 24, 2025. The next regular meeting of the City Council is scheduled to be held on Monday, April 14, 2025 beginning at 7:00 p.m. in the City Council Chamber at City Hall, 2 Portuguese Bend Road, Rolling Hills, California. It will also be available via City's website link at: https://www.rolling-hills.org/government/agenda/index.php

All written comments submitted are included in the record and available for public review on the City website.

Respectfully submitted,

_____
Christian Horvath, City Clerk

Approved,

_____
Jeff Pieper, Mayor

City of Rolling Hills INCORPORATED JANUARY 24, 1957

Agenda Item No.: 8.D
Mtg. Date: 04/14/2025

TO: **HONORABLE MAYOR AND MEMBERS OF THE CITY COUNCIL**

FROM: **CHRISTIAN HORVATH, CITY CLERK / EXECUTIVE ASSISTANT TO CITY MANAGER**

THRU: **KARINA BAÑALES, CITY MANAGER**

SUBJECT: **PAYMENT OF BILLS**

DATE: **April 14, 2025**

BACKGROUND:
None.

DISCUSSION:
None.

FISCAL IMPACT:
None.

RECOMMENDATION:
Approve as presented.

ATTACHMENTS:
CL_AGN_250414_CC_PaymentOfBills_F_E.pdf

CITY OF ROLLING HILLS
AP25-018, ACH25-018
Check Run 04/09/2025

Check No.	Check Date	Payee	Description	Amount
028892	4/9/2025	Alan Palermo Consulting	Mar 2 to Mar 29 Serv - City Hall/Tennis Cts ADA,	3,052.50
028893	4/9/2025	Ampirical Services, Inc.	Prof. Serv for Feb 2025 - 20B Engineering	21,545.75
028894	4/9/2025	Cox Communications	Phone Service for Mar 26 - Apr 25, 2025	94.07
028895	4/9/2025	Southern California News Group	Notice of Bid-Eastfield Dr UU Grnt DR4382-PJ0177	860.56
028895	4/9/2025	Southern California News Group	Pub Hrg-6 Quail Ridge/6 Chuckwagon	677.67
028895	4/9/2025	Southern California News Group	Public Hearing-Building Heights	918.32
CHECK TOTAL			**$ 2,456.55**	
028896	4/9/2025	Executive Suite Services Inc.	March 2025 Janitorial Services	1,150.00
028897	4/9/2025	County of Los Angeles	February 2025 Animal Housing Costs	2,043.99
028898	4/9/2025	LA County Sheriff's Department	February 2025 Law Enforcement Services	43,859.39
028899	4/9/2025	LSL CPAs	Audit - FY 24 Progress Bill	4,200.00
028900	4/9/2025	McGowan Consulting	February 2025 Municipal Stormwater Consulting	3,425.30
028901	4/9/2025	Pacific Architecture and Engineering,	City Hall ADA Architectural Services Jun-Nov 24	4,000.00
028902	4/9/2025	Point and Pay	Online Bill Pay Service for February 2025	25.00
028903	4/9/2025	Race Communications	Communications Fiber for April 2025	1,020.00
028904	4/9/2025	City of Rolling Hills Estates	Annual Road Encroachment Fee for Jan-Dec 2025	100.00
028905	4/9/2025	Ryan Ecological Consulting	Crest Rd East UU Env. Rec CAGN DR4344-PJ0526	2,000.00
028906	4/9/2025	Willdan Inc.	Feb 2025 Bldg Plan Check/Permit Project	1,702.50
ACH-809	4/9/2025	Bennett Landscape	Landscape Maint Services for April 2025	1,020.00
ACH-810	3/5/2025	CalPERS	March 2025 Health Insurance Premium	14,622.83
ACH-811	3/4/2025	CalPERS	CalPERS Retirement Payroll Ending 03-04-25	3,030.27
ACH-812	3/18/2025	CalPERS	CalPERS Retirement Payroll Ending 03-18-25	3,090.62
ACH-813	4/1/2025	Delta Dental	Dental Coverage for April 2025	873.47
ACH-814	4/1/2025	Forum Info-Tech. Inc./Levelcloud	April 2025 Cloud Hosting	5,295.98
ACH-815	4/1/2025	Nextiva	April 2025 Business Phone Service	291.38
ACH-816	3/30/2025	Pacific Premier Bank / FNBO	Pac Premier Cred Crd March 2025 Stmt Acct #1746	192.10
ACH-817	4/1/2025	Standard Insurance Company	April 2025 Life Insurance Policy # 161783 Div 0001	205.79

ACH-818	3/4/2025	Vantagepoint Transfer Agents -	Deferred Comp Contributions PR Ending 03-04-25	1,085.58
ACH-819	3/18/2025	Vantagepoint Transfer Agents -	Deferred Comp Contributions PR Ending 03-18-25	1,085.58
ACH-820	4/1/2025	Vision Service Plan - (CA)	April 2025 Vision Coverage	132.19
PR LINK	4/4/2025	PR LINK - Payroll & PR Taxes PR7	Payroll Processing Fee PR#7_03/19/25 - 04/01/25	88.45
PR LINK	4/4/2025	PR LINK - Payroll & PR Taxes PR7	Pay Period PR#7_03/19/25 - 04/01/25	19,035.37
				140,724.66

I, Karina Banales, City Manager of Rolling Hills, California certify that the above demands are accurate and there is available in the General Fund a balance of
$ 140,724.66 for the payment of above items.

Karina Banales, City Manager

Agenda Item No.: 8.E
Mtg. Date: 04/14/2025

TO: **HONORABLE MAYOR AND MEMBERS OF THE CITY COUNCIL**

FROM: **CHRISTIAN HORVATH, CITY CLERK / EXECUTIVE ASSISTANT TO CITY MANAGER**

THRU: **KARINA BAÑALES, CITY MANAGER**

SUBJECT: **ADOPT RESOLUTION NO. 1387, A RESOLUTION OF THE CITY COUNCIL OF THE CITY OF ROLLING HILLS. CALIFORNIA AUTHORIZING A FISCAL YEAR 2024-2025 BUDGET MODIFICATION TO INCREASE APPROPRIATIONS BY $236,969 IN FUND 16 FUNDED FROM A COMBINATION OF GRANT REVENUES AND RULE 20A CREDITS FOR PROVIDING ENGINEERING AND ENVIRONMENTAL MONITORING SERVICES WITHIN THE 20B PORTION OF THE EASTFIELD DRIVE AND THE CREST ROAD EAST FIRE PREVENTION POWER LINE UNDERGROUNDING PROJECTS**

DATE: **April 14, 2025**

BACKGROUND:
In order to preserve the rural character of Rolling Hills and eliminate risks of wildfires, the City Council encourages and supports utility undergrounding throughout the community. In line with this vision, the City applied for Hazard Mitigation Grant funds through the California Governor's Office of Emergency Services (CalOES)/FEMA Hazard Mitigation Program.
On September 14, 2020, the City was awarded $1,145,457 of Federal funds to underground utility infrastructure along Crest Road East from the eastern city limits to the frontage of 67 Crest Road East. The grant requires a local match of 25% ($381,819) for a total project amount of $1,527,276. The local match can be fulfilled using the California Public Utilities Commission (CPUC) Rule 20A work credits.

On January 26, 2022, the City was awarded $1,971,882 in Federal funds to underground utility infrastructure on Eastfield Drive between Outrider Road and Hackamore Road. The grant requires a Local Match of 25%, or $657,294, for a total project amount of $2,629,176. The Local Match can be fulfilled using the City's Rule 20A work credits.

The California Public Utility Commission requires the local agencies to adopt an ordinance creating an underground district in the area where both the existing and new facilities are and will be located. The formation of the Underground Utility District (UUD) provides SCE with the authorization needed to develop the design plans to remove existing overhead facilities and

install replacement underground facilities. On June 14, 2021, The City Council approved Resolution No. 1276 to create Underground Utility District No. 1 (Crest Road), and on November 14, 2022, the City Council adopted Resolution No. 1316 to create Underground Utility District No. 2 (UUD-02) (Eastfield Drive).

The City has completed the Crest Road East grant and submitted paperwork as required for the grant closeout. Once completed, the City will receive any additional reimbursements for expenses made on behalf of the project outside of the 25% local match.

The Eastfield Drive Underground Utility project requires construction to be completed by October 9, 2025.

DISCUSSION:
On December 10, 2024, the City Council received a presentation from staff regarding proposals that the City received for the engineering services within the 20B portion of the Eastfield Drive fire prevention power line undergrounding project. Ampirical Services Inc. (Ampirical) proposal was for a not-to-exceed amount of $117,899.

On March 24, 2025, the City Council received a presentation from staff regarding proposals that the City received for the environmental monitoring services within both the 20B portion of the Eastfield Drive and the 20C Crest Road East fire prevention power line undergrounding projects. GPA Consulting, Inc. (GPA) and Ryan Ecological Consulting's (REC) proposals were for not-to-exceed amounts of $117,070 and $2,000 respectively.

Ampirical's work is ongoing, but they have completed the necessary engineering designs and documentation for the Eastfield 20B Construction Bid and will remain on in an as-needed basis for pre-construction and/or during construction.

On March, 28, 2025, REC performed the Crest Road East California Coastal Gnatcatcher survey and determined none were present or affected. They subsequently submitted their report which was submitted to CalOES as part of the grant closeout.

The attached Budget Modification allows the City to pay for services provided and request reimbursement from CalOES/FEMA via the grants and the utilization of Rule 20A credits.

FISCAL IMPACT:
Under Rule 20B and Rule 20C, the City is required to cover the costs for any contracted work and then be reimbursed from the grant funds. The grant pays for 75% of the fee and the city pays 25% of the fee using Rule 20A tariff credits.

The total combined proposal fees for Ampirical, GPA and REC are a not-to-exceed amount of $236,969.

RECOMMENDATION:
Approve as presented.

ATTACHMENTS:
ResolutionNo1387_EastfieldDrive20B_Eng_Env_BudgetAmendment_F.pdf

RESOLUTION NO. 1387

A RESOLUTION OF THE CITY COUNCIL OF THE CITY OF ROLLING HILLS. CALIFORNIA AUTHORIZING A FISCAL YEAR 2024-2025 BUDGET MODIFICATION TO INCREASE APPROPRIATIONS BY $236,969 IN FUND 16 FUNDED FROM A COMBINATION OF GRANT REVENUES AND RULE 20A CREDITS FOR PROVIDING ENGINEERING AND ENVIRONMENTAL MONITORING SERVICES WITHIN THE 20B PORTION OF THE EASTFIELD DRIVE AND THE CREST ROAD EAST FIRE PREVENTION POWER LINE UNDERGROUNDING PROJECTS

THE CITY COUNCIL OF THE CITY OF ROLLING HILLS, CALIFORNIA, DOES HEREBY RESOLVE, DECLARE, DETERMINE, AND ORDER AS FOLLOWS:

Section 1. Recitals.

A. It is the intention of the City Council of the City of Rolling Hills to review the adopted budget from time to time.

B. On December 10, 2024 the City Council received a presentation from staff regarding proposals that the City received for the engineering services within the 20B portion of the Eastfield Drive fire prevention power line undergrounding project.

C. On March 24, 2025 the City Council received a presentation from staff regarding proposals that the City received for the environmental monitoring services within both the 20B portion of the Eastfield Drive and the 20C Crest Road East fire prevention power line undergrounding projects.

D. As it is the Eastfield Rule 20B or Crest Road East 20C portions of the undergrounding, the City will be required to cover the costs for any contracted work and then be reimbursed from the grant funds. The CalOES/FEMA Hazard Mitigation Grant pays for 75% of the overall fee and the City pays 25% of the fee using Rule 20A tariff credits.

D. The December 10, 2024 lowest proposer meeting the Engineering Services Request for Proposal requirements was $117.899. The March 24, 2025 proposals for environmental monitoring services were $117,070 and $2,000.

E. The City desires to appropriate an additional Two hundred thirty-six thousand, nine hundred and sixty-nine dollars ($236,969) in Fund 16 funded from a combination of grant revenues and Rule 20A work credits for the Eastfield Drive Rule 20B and Crest Road East Rule 20C undergrounding projects.

Section 2. The sum of Two hundred thirty-six thousand, nine hundred and sixty-nine dollars ($236,969) is hereby appropriated in the Fund 16 funded from a combination of grant revenues and Rule 20A work credits for the Eastfield Drive Rule 20B and Crest Road East Rule 20C undergrounding projects.

Section 3. This Resolution shall take effect immediately upon its adoption by the City Council, and the City Clerk shall certify to the passage and adoption of this Resolution and enter it into the book or original resolutions.

PASSED, APPROVED, AND ADOPTED this 14th day of April, 2025

_____
JEFF PIEPER
MAYOR

ATTEST:

_____
CHRISTIAN HORVATH
CITY CLERK

STATE OF CALIFORNIA)
COUNTY OF LOS ANGELES) §§
CITY OF ROLLING HILLS)

The foregoing Resolution No. 1387 entitled:

A RESOLUTION OF THE CITY COUNCIL OF THE CITY OF ROLLING HILLS. CALIFORNIA AUTHORIZING A FISCAL YEAR 2024-2025 BUDGET MODIFICATION TO INCREASE APPROPRIATIONS BY $236,969 IN FUND 16 FROM A TRANSFER OF GENERAL FUND RESERVES FOR PROVIDING ENGINEERING AND ENVIRONMENTAL MONITORING SERVICES WITHIN THE 20B PORTION OF THE EASTFIELD DRIVE AMD THE CREST ROAD EAST FIRE PREVENTION POWER LINE UNDERGROUNDING PROJECTS

was approved and adopted at a regular meeting of the City Council on the 14th day of April 2025, by the following roll call vote:

AYES:
NOES:
ABSENT:
ABSTAIN:

_____
CHRISTIAN HORVATH
CITY CLERK

Agenda Item No.: 13.A
Mtg. Date: 04/14/2025

TO: **HONORABLE MAYOR AND MEMBERS OF THE CITY COUNCIL**

FROM: **CHRISTIAN HORVATH, CITY CLERK / EXECUTIVE ASSISTANT TO CITY MANAGER**

THRU: **KARINA BAÑALES, CITY MANAGER**

SUBJECT: **CONSIDERATION OF AWARDING A CONSTRUCTION CONTRACT TO FIDELITY BUILDERS, INC. FOR PROVIDING CONSTRUCTION SERVICES ON THE TENNIS COURT ADA IMPROVEMENT PROJECT IN AN AMOUNT NOT-TO-EXCEED $770,396, AUTHORIZE THE CITY MANAGER TO EXECUTE THE AGREEMENT, AND FINDING THE PROJECT CATEGORICALLY EXEMPT FROM THE CALIFORNIA ENVIRONMENTAL QUALITY ACT**

DATE: **April 14, 2025**

BACKGROUND:
At the June 12, 2023 City Council Meeting, city staff reported on a coordination meeting with the Rolling Hills Community Association (RHCA) held in May 2023. At this meeting, it was communicated that the City's Tennis Courts ADA Improvement Project (TC-ADA) would incorporate the grading and retaining wall to support the RHCA's Cabana improvement/amenities project. This addition to the City's improvement plans was determined based on concerns over the sequence of construction and to facilitate workflow between contractors commissioned by the city and the RHCA. City staff, RHCA, and Bolton Engineering held two subsequent coordination meetings on June 6, 2023, and June 14, 2023, to discuss outstanding items and update all parties.

On June 26, 2023 the City Council directed staff to advertise the TC-ADA for bids and approved the allocation for landscape, irrigation, and lighting plans. The City Council would be provided the opportunity to review the results of the construction bids and ultimately decide whether to award a contract at a later date.

On July 10, 2023, the City Council approved Resolution No. 1344, authorizing a budget amendment to transfer $307,000 from reserves to the Capital Projects Fund for this project.

On July 12, 2023, City staff began the first of many monthly meetings with the RHCA regarding project coordination and the process for further submissions to LACBS.

On July 24, 2023, the City Council was asked to approve RHCA's conceptual design so they could submit plans to the LACBS to begin the permitting process. At this time, no formal construction timeline has been set for the project to begin. The Council voted to approve it as presented, noting that it would discuss the proposed firepit when the item comes back in the future.

In August 2023, staff worked on addressing LACBS requirements for Low-Impact Development (LID) standards. The RHCA finalized their plans for submission to LACBS and began preparing to get estimates on their Cabana project.

In October 2023, LACBS acknowledged receipt of resubmittals but did not indicate a timeframe for response. The retaining wall plans were approved. City

In November 2023, the RHCA shared plans for the expansion of Tennis Court #1, a proposal for the scope of work, and some cost estimates. Staff and the RHCA continued with planning/staging discussions to lead responsibility for the various project components.

In December 2023, as part of the ongoing discussions, the RHCA provided staff with plans, two bids from 2022, and a staff memo describing the tennis club's request and scope of work for the rebuilding and expansion of court #1. The RHCA agreed to send an overview of their construction program with timelines and key milestones.

In January 2024, staff received approved grading plans from LCBS. RHCA enlisted the services of the Bergman Group to help with construction management, and LA CBSs began its second round of review on RHCA's cabana

On March 25, 2024, City staff provided a status update to the City Council as outlined in this report.

On April 22, 2024, the City Council unanimously approved assigning the RHCA to lead responsibility for the combined TC-ADA and Cabana projects. The city then took the lead in constructing the subsequent Tennis Court #1 Expansion Project.

At the June 24, 2024 City Council meeting, staff presented that due to financial constraints caused by significant infrastructure repairs requiring immediate attention, the RHCA had reconsidered their approach and requested reverting to the initial concept with the City leading the ADA component of the Tennis Court improvements. To assist with the fiscal impact, the RHCA board had agreed to contribute 50% of the associated cost for the ADA/Retaining Wall. The RHCA has allocated $400,000 for the ADA component and will review and consider additional funding if required. Based on this information, the City Council authorized reallocating funds from the capital account designated for the Tennis Court 1 expansion project back to the TC-ADA.

On August 26, 2024, the City Council approved a contract with the Bergeman Group for Construction Management Services.

On November 6, 2024, staff released a public notice of bid for the Tennis Court Improvement Project, Job No. 2024-01, with a closing date of December 3, 2024. While interested parties attended the mandatory job walk, upon closing, no interested bidders submitted.

DISCUSSION:
On January 14, 2025, staff re-released a public notice of bid for Tennis Court Improvement Project, Job No. 2025-01 Request for Bid and posted it on the City's website.

The City published the Request for Bid in a local newspaper on January 14 and 20, 2025, as mandated by the State Public Contract Code. An optional job walk was held on January 29, 2025.

On February 18, 2025, the City received three (3) sealed bids at the 2 pm Bid Closing as follows:

Bidder	Address	Base Bid Amount
Fidelity Builders, Inc.	1824 Oakwood Ave., Glendale, CA 91208	$700,360.00
RAMSA Construction Inc.	14014 Moorpark St., #320, Sherman Oaks, CA 91423	$709,700.00
US Builders & Consultants	126 Desert Lotus, Irvine, CA 92618	$2,648,138.83

Staff validated all bids received and determined that Fidelity Builders, Inc. was the lowest responsive and responsible bidder. However, this base bid amount was much higher than the current budgeted amount for the project, and some line items in the Fidelity Builders, Inc. bid are many multiples higher than the other bids – even though the other base bids are still higher. Public Contract Code section 20166, which applies to the City, declares the right to reject all bids plainly, without qualifications or restrictions. Thus, it is staff's recommendation that the City Council analyze and assess whether or not it is in the City's best interest to award the bid to Fidelity Builder, Inc. If not, then staff recommends a motion to reject all bids. If yes, then staff's recommendation is to award the construction contract to Fidelity Builders, Inc. for $700,360 and allocate an additional $70,036 as a 10% contingency for a total of $770,396.

ENVIRONMENTAL REVIEW
The conditional award of this contract, as well as the undergrounding work to be performed, is exempt from further environmental review pursuant to State and Local CEQA guidelines section 15302, Class 2(d), conversion of overhead electric utility distribution system facilities to underground including connection to existing overhead electric utility distribution lines where the surface is restored to the condition existing prior to the undergrounding.

FISCAL IMPACT:
The City Council currently has approximately $300,000 appropriated in the Capital Improvement Funds. The FY 23/24 Carryover Budget was $293,708.75.

Staff previously budgeted $103,950 for construction management services which included a 10% contingency. Staff also attributes any of Alan Palermo's time on this project to the capital fund. Combined expenses through February 2025 were $15,198.75. The remaining balance is $278,510 and will be applied to both the construction management and construction costs.

As noted in the report background, to assist with the fiscal impact, the RHCA board has previously agreed to contribute 50% of the associated cost for the ADA/Retaining Wall. The RHCA has allocated $400,000 for the ADA component and will review and consider additional

funding if required.

The total not-to-exceed fee for Fidelity Builder, Inc. is $770,396

COST: $770,396 includes 10% contingency.

Staff would need to return with a Budget Amendment Resolution for any costs above what is already budgeted or provided by the RHCA.

RECOMMENDATION:
Approved as presented

ATTACHMENTS:
CL_BID_250218_2025-01_FidelityBuildersInc..pdf
CL_BID_250218_2025-01_RAMSAConstruction.pdf
CL_BID_250218_2025-01_USBuilders&Consultants.pdf
CL_BID_250113_2025-01_TC_ADA_Project_BidBreakdownForm_Analysis.pdf
CL_BID_250107_2025-01_TC_ADA_Project_F_WithAttachments.pdf
CL_PBN_250113_NOB_2025-01_TC_ADA_Affidavit.pdf
CA_AGR_250414_FidelityBuildersInc_TC-ADA_2025-01_D.pdf

Fidelity Builders, Inc.

RECEIVED
FEB 18 2025
City of Rolling Hills
by _____

Bid for Tennis Court ADA
Improvement Project
Job No. 2025-01

City of Rolling Hills

PROPOSAL

Date: February 18, 2025

Tennis Court ADA Improvement Project, Job No. 2025-01

TO THE CITY OF ROLLING HILLS, ROLLING HILLS, CALIFORNIA

Pursuant to the foregoing Notice to Contractors, the undersigned bidder herewith submits a proposal on the bidding form or forms attached hereto and made a part hereof, and binds himself on award by the City of Rolling Hills under this proposal to execute in accordance with such award a contract, of which this proposal and the said Notice to Contractors, Instructions to Bidders, Specifications, and drawings shall be a part, and to furnish the bond or bonds required by the Specifications. The attached Notice to Contractors, Instructions to Bidders, Specifications, and drawings are made a part of this proposal and all provisions thereof are hereby accepted.

The bidder acknowledges that the Instructions to Bidders provides, among other things, that the Contract shall be terminated and the bid bond forfeited if the contractor fails to provide the applicable insurance certificates and bonds within the time set forth in Section 21 of the Instructions to Bidders.

The bidder further agrees that, in case of his/her default in executing the required contract and the required bond or bonds, or furnishing the required insurance, the money payable under the bid bond accompanying his proposal shall be applied by the City towards payment of the damage to the City on account of such default, as provided in the specifications.

(CORPORATE SEAL OR NOTARIAL ACKNOWLEDGEMENTS OF SIGNATURE - IF PARTNERSHIP OR PROPRIETORSHIP)

Firm Fidelity Builders, Inc.

By _____

(Signature)

Name/Title Narek Habblian, Vice President

Address 1824 Oakwood Ave.

Zip Glendale, CA 91208

Phone (818) 679-8059

E-mail: cityclerk@cityofmm

Nature of firm (corporation, partnership, etc.) and names of individual members of the firm, or names and titles of officers of the corporation.

Fidelity Builders, Inc.

Kyork Halablian, President

Narek Halablian, Vice President

Corporation organized under the laws of the State of: California

BIDDERS PROPOSAL

Name of Bidder: Fidelity Builders Inc. The undersigned, having examined the proposed Contract Documents titled:

Tennis Court ADA Improvement Project, Job No. 2025-01

and having visited the site and examined the conditions affecting the work, hereby proposes and agrees to furnish all labor, materials, equipment, and appliances, and to perform operations necessary to complete the work as required by said proposed Contract Documents as itemized below:

PROJECT BID SCHEDULE - SEE AND COMPLETE SEPARATE EXCEL FILE

BASE BID:

~~Nine hundred thirty two thousand two hundred sixty five~~ two million two hundred eight two thousand three hundred fifty five dollars

(~~$ 932,265~~ $2,282,355.00)

Base Bid Total Sum in Words Base Bid — Total Sum in Figures

The City reserves the right to request the unit price of some or all contract items.

Fidelity Builders, Inc.	10%
Name of Bidder	Amount of Certified Check/Bidder's Bond
1824 Oakwood Ave. Glendale, CA 91208	Philadelphia Indemnity Insurance Co.
Address	Name of Bonding Company

The price shall include all State, Federal, and other taxes applicable to the project, and shall be a firm offer for a period of Ninety (90) days after the date of bid opening.

DETAILED BID BREAKDOWN FORM

Owner: City of Rolling Hills
Project Type: ADA City Project
Contractor:

Bergeman GROUP

ITEM NUMBER	ITEM DESCRIPTION	INDICATE "SELF-PERFORMED" OR NAME SUBCONTRACTOR	QUANTITY	UNIT OF MEASURE	UNIT COST	TOTAL COST
GENERAL CONDITIONS						
1	Mobilization & Demobilization (Onsite storage, Portable contractor restrooms, staging area, etc.)	self	1	Lump sum	N/A	$18,000.00
2	Safety, Hoisting, Materials Handling, Traffic Control & Debris Disposal	self	1	Lump sum	N/A	$9,840.00
3	Exterior Dust Control, Temporary Dust Fence & Protection of Non-Work Areas	sub	1	Lump sum	N/A	$10,800.00
4	Daily Cleaning & Final Cleaning	self	1	Lump sum	N/A	$7,200.00
5	Building Permit Filing and Coordination By Contractor - Complete Contractor Statement and pick up Permit (fees related to permitting to be reimbursed to Contractor by Owner with no markup to Contractor)	self	1	Lump sum	N/A	$5,400.00
6	Construction Administration (OAC Meetings, Substantial Completion, and Final Completion Meetings, Submittals, RFIs, etc.)	self	1	Lump sum	N/A	$2,400.00
7	Demolition/Removals: all existing improvements, utilities, structures within the limits of work shown on plans GR2301100001 necessary to construct the improvements as shown on all plans associated with this project. City requires construction and demolition (C&D) permit for hauling and recycling from third parties and has recycling requirements. The City's franchise waste hauler, Republic Services, will take care of the C&D if they are used.	sub	1	Lump sum	N/A	$52,800.00
				TOTAL: GENERAL CONDITIONS		$106,440.00

GRADING				*Quantities provided are estimated and for bidding purposes only		
ITEM NUMBER	ITEM DESCRIPTION	INDICATE "SELF-PERFORMED" OR NAME SUBCONTRACTOR	QUANTITY	UNIT OF MEASURE	UNIT COST	TOTAL COST
1	Rough grading needed per Grading plans.	sub		SY	$0.00	$7,200.00
2	Install site drainage and erosion controls.	sub	1	Lump sum	N/A	$10,800.00
3	Fine grading prior to putback commencement.	sub		SY	$0.00	$4,800.00
				TOTAL: GRADING		$22,800.00

PAVING				*Quantities provided are estimated and for bidding purposes only		
ITEM NUMBER	ITEM DESCRIPTION	INDICATE "SELF-PERFORMED" OR NAME SUBCONTRACTOR	QUANTITY	UNIT OF MEASURE	UNIT COST	TOTAL COST
1	Install new pavement at new ADA Van accessible parking space per Architectural plans.	sub		SY	$0.00	$4,680.00
2	Asphalt & Concrete Mix Designs & Batch Testing - For each type of asphalt and concrete to be used on the project, provide proposed mix designs and produce test batches showing compliance with City of Rolling Hills specifications.	sub	1	Lump sum	N/A	$24,480.00
3	Paint cross wallks per Architectural plans.	sub		LF	$0.00	$2,040.00
				TOTAL: PAVING		$31,200.00

ADA IMPROVEMENTS				*Quantities provided are estimated and for bidding purposes only		
ITEM NUMBER	ITEM DESCRIPTION	INDICATE "SELF-PERFORMED" OR NAME SUBCONTRACTOR	QUANTITY	UNIT OF MEASURE	UNIT COST	TOTAL COST
1	Install new ADA Van Parking space per plans plans. Striping, signage and painted ISA on pavement included. Refer to detail #17 and 18 on sheet A-602 of the Architectural plans.	sub	1	Lump sum	N/A	$5,040.00
2	Install new wheel stop at new ADA Van parking space per detail #8 on sheet A-602 of the Architectural plans..	sub		EA	$0.00	$360.00
3	Install new truncated domes at all ramp landings per detail #15 on sheet A-602 of the Architectural plans.	sub		EA	$0.00	$3,000.00
4	Install new ramps and pathways, concrete curbs, retaining wall, and pavers per plans specs.	sub		LF	$0.00	$44,400.00
5	Install new hand rails, nosing and warning strips per details #3, 5, 8 and 15 on sheet A-603 of the Architectural plans.	sub		LF	$0.00	$43,000.00

DETAILED BID BREAKDOWN FORM

Owner: City of Rolling Hills
Project Type: ADA City Project
Contractor

ITEM NUMBER	ITEM DESCRIPTION	INDICATE "SELF-PERFORMED" OR NAME SUBCONTRACTOR	QUANTITY	UNIT OF MEASURE	UNIT COST	TOTAL COST
6	Retaining Wall: ADA ramp (From Parking Area)	sub		LF	$0.00	$28,800.00
7	Retaining Wall: ADA ramp (Tennis Court Viewing Area)	sub		LF	$0.00	$25,200.00
8	Install ADA Lighting	sub		Lump Sum	$0.00	$3,840.00
				TOTAL: ADA SITE IMPROVEMENTS		$153,640.00

CIVIL SITE IMPROVEMENTS *Quantities provided are estimated and for bidding purposes only

ITEM NUMBER	ITEM DESCRIPTION	INDICATE "SELF-PERFORMED" OR NAME SUBCONTRACTOR	QUANTITY	UNIT OF MEASURE	UNIT COST	TOTAL COST
1	Retaining Wall: Planters	sub		LF	$0.00	$24,000.00
2	Landscape: Irrigation line sleeves	sub		Lump sum	N/A	$2,160.00
3	Brick pavers	self		SY	$0.00	$6,720.00
				TOTAL: SITE IMPROVEMENTS		$32,880.00

STRUCTURAL *Quantities provided are estimated and for bidding purposes only

ITEM NUMBER	ITEM DESCRIPTION	INDICATE "SELF-PERFORMED" OR NAME SUBCONTRACTOR	QUANTITY	UNIT OF MEASURE	UNIT COST	TOTAL COST
1	Install all foundation plan components per plan specs.	sub	1	Lump sum	N/A	$67,200.00
2	Strip all forms and cleanup once concrete has cured.	sub	1	Lump sum	N/A	$2,400.00
3	Install all framing plan components per plan specs. Including Trellis adjacent to Cabana.	sub	1	Lump sum	N/A	$225,000.00
4	Install Hardy Frame components per plan specs.	sub	1	Lump sum	N/A	$1,800.00
				TOTAL: STRUCTURAL		$296,400.00

PLUMBING *Quantities provided are estimated and for bidding purposes only

ITEM NUMBER	ITEM DESCRIPTION	INDICATE "SELF-PERFORMED" OR NAME SUBCONTRACTOR	QUANTITY	UNIT OF MEASURE	UNIT COST	TOTAL COST
1	Installation of all rough plumbing per specs on plans.	sub	1	Lump sum	N/A	$27,600.00
~~2~~	~~Installation of ADA hardware in restrooms.~~		~~1~~	~~Lump sum~~	~~N/A~~	~~$0.00~~
~~3~~	~~Installation of water heater tanks per specs on plans.~~			~~EA~~	~~$0.00~~	~~$0.00~~
~~4~~	~~Installation of all finish fixtures per specs on plans.~~		~~1~~	~~Lump sum~~	~~N/A~~	~~$0.00~~
				TOTAL: PLUMBING		$27,600.00

ELECTRICAL *Quantities provided are estimated and for bidding purposes only

ITEM NUMBER	ITEM DESCRIPTION	INDICATE "SELF-PERFORMED" OR NAME SUBCONTRACTOR	QUANTITY	UNIT OF MEASURE	UNIT COST	TOTAL COST
1	Installation of all rough electrical per specs on plans.	sub	1	Lump sum	N/A	$21,120.00
2	Providing Title 24 specs on all materials used.	sub	1	Lump sum	N/A	$1,560.00
3	Installation of fixtures embedded in concrete curbs per specs on plans.	sub	1	Lump sum	N/A	$6,720.00

DETAILED BID BREAKDOWN FORM

Owner: City of Rolling Hills
Project Type: ADA City Project
Contractor:

ITEM NUMBER	ITEM DESCRIPTION	INDICATE "SELF-PERFORMED" OR NAME SUBCONTRACTOR	QUANTITY	UNIT OF MEASURE	UNIT COST	TOTAL COST
~~4~~	~~Installation of all finish fixtures per specs on plan, including park lights.~~		~~1~~	~~Lump sum~~	~~N/A~~	~~$0.00~~
		TOTAL: ELECTRICAL				**$29,400.00**

PROJECT TOTALS

TOTAL PROJECT CONSTRUCTION COSTS	**$700,360.00**
Performance & Payment Bond Percentage (%)	2.50%
Performance & Payment Bond Cost ($$)	$17,509.00
Contingency 10%	$70,036.00
TOTAL PROJECT CONSTRUCTION COSTS W/ PERFORMANCE & PAYMENT BONDS WITH CONTINGENCY	**$787,905.00**
TOTAL WORKING DAYS TO COMPLETE PROJECT	**90.00**

ALTERNATES

ITEM NUMBER	ITEM DESCRIPTION	INDICATE "SELF-PERFORMED" OR NAME SUBCONTRACTOR	QUANTITY	UNIT OF MEASURE	UNIT COST	TOTAL COST
1	Install sewer connection per "Sewer Main Improvement Plan" drawings.	sub	1	Lump sum	N/A	$20,280.00 ~~$810,000~~
2	Remove sewer connection to existing septic tank.	sub	1	Lump sum	N/A	$11,640.00 ~~$420,000~~

TOTAL PROJECT CONSTRUCTION COSTS ~~$1,230,000~~	~~$31,920.00~~
ALTERNATES Performance & Payment Bond Percentage (%) ~~7.5%~~	~~2.50%~~
Performance & Payment Bond Cost ($$) OF **ALTERNATES** ~~$30,000~~	~~$798.00~~
Contingency 10% ~~$126,000~~	~~$3,192.00~~
TOTAL ALTERNATES COSTS W/ PERFORMANCE & PAYMENT BONDS AND CONTINGENCY	~~$35,910.00~~

~~$1,386,000~~

ALLOWANCES

ITEM NUMBER	ITEM DESCRIPTION	INDICATE "SELF-PERFORMED" OR NAME SUBCONTRACTOR	QUANTITY	UNIT OF MEASURE	UNIT COST	TOTAL COST
1	Subgrade compaction testing	sub	1	EA	$0.00	$2,400.00
2	Special Inspections as required by City of Rolling Hills.	sub	1	EA	$0.00	$3,600.00
~~3~~	~~Additional Architectural Services~~		~~1~~	~~Lump sum~~	~~N/A~~	~~$0.00~~
4	Existing Landscape repairs and replacements.	sub	1	Lump sum	N/A	$90,400.00

TOTAL PROJECT CONSTRUCTION COSTS	**$96,400.00**
ALLOWANCES Performance & Payment Bond Percentage (%)	2.50%
Performance & Payment Bond Cost ($$) OF **ALLOWANCES**	$2,410.00
Contingency 10%	$9,640.00
TOTAL ALLOWANCES COSTS W/ PERFORMANCE & PAYMENT BONDS AND CONTINGENCY	$108,450.00

GRAND TOTAL

GRAND TOTAL PROJECT CONSTRUCTION COSTS W/ ALTERNATES, ALLOWANCES AND PERFORMANCE & PAYMENT BONDS WITH CONTINGENCY	~~$932,265.00~~

$2,282,355

Bidder's Qualifications and References

Name of Bidder Fidelity Builders, Inc.

THE BIDDER SHALL COMPLETE THE FOLLOWING STATEMENTS:

1. The bidder has been engaged in the contracting business, under the present business name, for 11 years.

2. Experience in work of a nature similar to that covered in the Proposal extends over a period of 20 years.

3. The bidder, as a contractor, has never failed to satisfactorily complete a contract awarded to him, except as follows (Name any and all exceptions and reasons therefore):

_____

_____

_____

4. Contractor's License Number, State of California 998850 Class B

5. Contractor's License Expiration Date 11/30/26

6. Department of Industrial Relations (DIR) Registration Number 1000715424

7. The following contracts have been satisfactorily completed in the last three years for the persons, firm, or authority indicated; and to whom reference is made. (Name five contracts and include the total contract amount as well as the original bid amount for each contract.)

	YEAR	TYPE OF WORK	FINAL CONTRACT AMOUNT	ORIGINAL CONTRACT AMOUNT	LOCATION AND FOR WHOM PERFORMED
A	2022	excavation, T.I.	$1,600,000	$1,400,000	Nissan of Buena Park
B	2022	excavation, T.I.	$1,400,000	$1,200,000	Nissan of Puente Hills
C	2023	high school gym extension	$200,000	$200,000	Costa Mesa High School
D	2024	underground plumbing, II.	$450,000	$420,000	City of Fontana
E	2024	new offices, T.I.	$690,000	$650,000	Oxnard Harbor District

8. The following persons may be contacted for information concerning the contract work listed above (list a reference for each contract named).

	NAME	TITLE	ADDRESS	TELEPHONE
A	Ekrem Uzman	Architect	Miami, FL	(305) 363-6666
B	Armando Martinez	PM	Fontana, CA	(909) 350-6660
C	Leo Hernandez	PM	Costa Mesa, CA	(949) 903-8828
D	Rodrigo Zaragoza	PM	Oxnard, CA	(805) 754-1618
E				

9. Reference is hereby made to the following bank or banks as to the financial responsibility of the bidder:

Bank Bank of America Branch Montrose, CA

Bank _____ Branch _____

Bank _____ Branch _____

10. Reference is hereby made to the following surety company or companies as to the financial responsibility and general reliability of the bidder:

Surety Company Philadelphia Indemnity Insurance Company Phone (888) 592-6631

Surety Company _____ Phone _____

11. Following is a list of plant and equipment that is owned by the bidder and is definitely available for use on the proposed project:

QUANTITY	NAME, TYPE, AND CAPACITY	CONDITION	LOCATION

(Attach additional sheets as necessary)

12. All of the above statements as to experience, financial qualifications, and available plant and equipment are submitted in conjunction with the proposal, as a part thereof, and the truthfulness and accuracy of the information is guaranteed by the bidder.

Signature of Bidder _____

Name/Title: Narek Halabian, Vice President

DESIGNATION OF SUBCONTRACTORS

NAME OF BIDDER Fidelity Builders, Inc.

In compliance with the provisions of the Subletting and Subcontracting Fair Practices Act (Division 2, Part 1), Chapter 4 of the Public Contract Code of the State of California, and any amendments thereof), each bidder shall set forth below:

1. The name and location of the place of business of each subcontractor who will perform work or labor or render service to the Contractor in or about the construction of the work or improvement, or a subcontractor licensed in the State of California who, under subcontract to the Contractor, specially fabricates and installs a portion of the work or improvement according to detailed drawings contained in the plans and specifications, in an amount in excess of one-half of one percent of the Contractor's total bid.

2. The portion and estimated dollar amount of the work which will be done by each subcontractor. The Contractor shall list only one subcontractor for each portion as is defined by the Contractor in his bid.

Please type or legibly print (attach additional sheets as necessary).

Name of Subcontractor	City	Portion	Estimated $ Amount
Name: ABC Resources, Inc. License No. 538680 License Class A, C12, C32 DIR Registration No. 1000001608	Ontario, CA	excavation asphalt concrete	$200,000
Name: Bennett Landscape License No. 479003 License Class C27 DIR Registration No. 1000006863	Harbor City, CA	landscaping	$80,000
Name: Integral Electrical Engineering License No. 976899 License Class C10 DIR Registration No. 1000005073	Glendale, CA	electrical	$20,000
Name: UBD Inc. License No. 1040819 License Class C21 DIR Registration No. 1001095130	North Hollywood, CA	demolition	$45,000
Name: So Cal Sewer & Water License No. 1029948 License Class C36, A, B DIR Registration No. 1000060493	Long Beach, CA	plumbing	$30,000
Name: License No. License Class DIR Registration No.			

Circumvention by the Contractor of the requirement under Section 4104 of the Public Contract Code to list his subcontractors, by the device of listing another contractor who will in turn sublet portions constituting the majority of the work covered by this contract, shall be considered a violation of Division 2, Part 1, Chapter 4 of the Public Contract Code and shall subject the Contractor to the penalties set forth in Sections 4110 and 4111 of the Public Contract Code.

If the Contractor fails to specify a subcontractor or if the Contractor specifies more than one subcontractor for the same portion for work to be performed under the contract in excess of one-half of one percent of the Contractor's total bid, he agrees that he/she is fully qualified to perform that portion himself/herself, and that he/she shall perform that portion himself/herself. If after award of contract, the Contractor subcontracts, except as provided for in Sections 4107 or 4109 of the Public Contract Code, any such portion of the work, the Contractor shall be subject to the penalties named in Section 4111 of the Public Contract Code.

The Contractor shall not:

A. Substitute any person as subcontractor in place of the subcontractor listed in the original bid, except that the City may, except as otherwise provided in Section 4107.5 of the Public Contract Code, consent to the substitution of another person as subcontractor:

    1. When the subcontractor listed in the bid, after having had a reasonable opportunity to do so, fails or refuses to execute a written contract, based upon the general terms, conditions, plans and specifications for the project involved or the terms of such contractor's written bid, is presented to him/her by the Contractor, or
    2. When the listed subcontractor becomes bankrupt or insolvent, or
    3. When the listed subcontractor fails or refuses to perform his/her subcontract, or
    4. When the listed subcontractor fails or refuses to meet the bond requirements of the Contractor as set forth in Section 43108 of the Public Contract Code, or
    5. When the Contractor demonstrates to the City, subject to the further provisions set forth in Section 4107.5 of the Public Contract Code, that the name of the subcontractor was listed as the result of an inadvertent clerical error, or
    6. When the listed subcontractor is not licensed pursuant to the Contractors License Law, or
    7. When the City determines that the work performed by the listed subcontractor is substantially unsatisfactory and not in substantial accordance with the plans and specifications, or that the subcontractor is substantially delaying or disrupting the progress of the work.

B. Permit any subcontract to be voluntarily assigned or transferred or allow it to be performed by anyone other than the original subcontractor listed in the original bid, without the consent of the City.
C. Other than in the performance of "change orders" causing changes or deviations from the original contract, sublet or subcontract any portion of the work in excess of one-half

of one percent of the Contractor's total bid as to which his original bid did not designate a subcontractor.

Prior to approval of a Contractor's request for a subcontractor substitution, the City will give notice in writing to the listed subcontractor of the Contractor's request to substitute and of the reason for the request. The notice will be served by certified or registered mail to the last known address of the subcontractor. The listed subcontractor who has been so notified shall have five working days within which to transmit to the City written objections to the substitution. Failure to file these written objections shall constitute the listed subcontractor's consent to the substitution.

If written objections are filed, the City will give notice in writing of at least five working days to the listed subcontractor of a hearing by the City on the Contractor's request for substitution.

The Contractor, as a condition to asserting a claim of inadvertent clerical error in the listing of a subcontractor, shall within two working days after the time of the bid opening by the City, give written notice to the City and copies of such notice to both the subcontractor he claims to have listed in error and the intended subcontractor who had bid to the Contractor prior to the bid opening.

Subletting or subcontracting of any portion of the work in excess of one-half of one percent of the Contractor's total bid as to which no subcontractor was designated in the original bid shall only be permitted in cases of public emergency or necessity, and then only after a finding reduced to writing as a public record of the City setting forth the facts constituting the emergency or necessity.

If the Contractor violates any of the provisions of Division 2, Part 1, Chapter 4 of the Public Contract Code or any amendments thereof, the Contractor violates his contract and the City may exercise the option, in its own discretion, of (1) canceling its contract, or (2) assessing the Contractor a penalty in an amount not more than ten percent of the amount of the subcontract involved, and this penalty shall be deposited in the fund out of which the prime contract is awarded. In any proceedings under Section 4110 of the Public Contract Code the Contractor shall be entitled to a public hearing and to five days' notice of the time and place thereof.

Contractor's Affidavit of Non-collusion

STATE OF CALIFORNIA)
) SS
COUNTY OF LOS ANGELES)

Marek Halablian being first duly sworn, deposes and says:

1. That he/she is the Vice President (Title of office if a corporation: "sole owner," "Partner," or other proper title) of Fidelity Builders, Inc; hereinafter called "Contractor", who has submitted to the City of Rolling Hills a proposal for the construction of **Tennis Court ADA Improvement Project, Job No. 2025-01**;

2. That said proposal is genuine; that the same is not sham; that all statements of fact therein are true;

3. That such proposal was not made in the interest or behalf of any person, partnership, company, association, organization, or corporation not named or disclosed.

4. That the Contractor did not, directly or indirectly induce, solicit or agree with anyone else to submit a false or sham bid, to refrain from bidding, or withdraw his/her bid, to raise or fix the bid price of the Contractor price or of anyone else, or to raise or fix any overhead profit, or cost element of the Contractor's price or the price of anyone else; and did not attempt to induce action prejudicial to the interest of the City of Rolling Hills, or of any other bidder, or anyone else interested in the proposed contract;

5. That the Contractor has not in any manner sought by collusion to secure for himself/herself an advantage over any other bidders or induce action prejudicial to the interests of the City of Rolling Hills or of any other bidder, or anyone else interested in the proposed contract;

6. That the Contractor has not accepted any bid from any subcontractor or material man through any bid depository, the bylaws, rules or regulations, of which prohibit or prevent the Contractor from considering any bid from any subcontractor or material man, which is not processed through said bid depository, or which prevent any subcontractor or material man from bidding to any Contractor who does not use facilities of or accept bids from or through such bid depository;

7. That the Contractor has not been debarred from participation in any state or federal public works project.

8. That the Contractor did not, directly or indirectly, submit the Contractor's bid price or any breakdown thereof, or the contents thereof, or divulge information or data relative thereto

to any corporation, partnership, company, association, organization, bid depository, or to any member or agent thereof, or to any individual or group of individuals, except to the City of Rolling Hills, or to any person or persons who have partnership or other financial interest with said Contractor in his business.

Dated this 18th day of February 2025

Fidelity Builders, Inc. Contractor

Signature

Narek Halablian, Vice President Name/Title

SUBSCRIBED AND SWORN TO BEFORE ME

ON 02/18/2025

Notary Public in and for the County of Los Angeles, State of California

See Attached certificate:
Elen Sharbyeldyan, Notary Public

Place Notary Seal Above

JURAT

A notary public or other officer completing this certificate verifies only the identity of the individual who signed the document to which this certificate is attached, and not the truthfulness, accuracy, or validity of that document.

State of California
County of Los Angeles

Subscribed and sworn to (or affirmed) before me on
this 18 day of February, 20 25,
by Narek Yeghia K Halabian

proved to me on the basis of satisfactory evidence to be the person(s) who appeared before me.

Signature _____

ELEN SHAKHGELDYAN
Notary Public - California
Los Angeles County
Commission # 2494869
My Comm. Expires Jul 18, 2028

(Seal)

Pre-Bid Site Inspection Certification

Tennis Court ADA Improvement Project, Job No. 2025-01

The bidder hereby certifies that he or she and his or her Subcontractors have inspected the work site of the above project, and have fully acquainted themselves with all conditions and matters which might in any way affect the work, time of completion or the cost thereof. The bidder also certifies he or she has observed the designated Contractor Work Areas and access routes.

BIDDER:

Company Name: Fidelity Builders, Inc.

Signature: _____

Name/Title: Naret Halabian

Date: 2/18/25

BIDDER'S INSPECTORS:

Name: Kyork Halabian

Title: President

Date of Inspection: January 29, 2025

Name: _____

Title: _____

Date of Inspection: _____

Workers' Compensation Certificate

Tennis Court ADA Improvement Project, Job No. 2025-01

The bidder hereby certifies that he or she is aware of the provisions of Section 3700 of the Labor Code which requires every employer to be insured against liability for workers' compensation or to undertake self-insurance in accordance with the provisions of that code, and will comply with such provisions before commencing the performance of any work on the above project.

BIDDER:

Company Name: Fidelity Builders, Inc.

Signature: [signature]

Name/Title: Narek Halablian, Vice President

Date: 2/18/25

BID BOND

Bond No. : 02182025 **KNOW ALL PERSONS BY THESE PRESENTS** that:

WHEREAS the City of Rolling Hills, California ("City"), has issued an invitation for bids for the work described as follows:

Tennis Court ADA Improvement Project, Job No. 2025-01

WHEREAS Fidelity Builders, Inc.

1824 Oakwood Avenue, Glendale, CA 91208
(Name and address of bidder)

("Principal"), desires to submit a bid to City or the work.

WHEREAS, bidders are required, under the terms of the Section 20170 of the California Public Contract Code, to furnish a form of bidder's security with their bid.

NOW, THEREFORE, we, the undersigned Principal, and

Philadelphia Indemnity Insurance Company, One Bala Plaza, Suite 100, Bala Cynwyd, PA 19004-1403
(Name and address of Surety)

("Surety") a duly admitted surety insurer under the laws of the State of California, as Surety, are held and firmly bound unto the City in the penal sum of Ten Percent (10%) of the Total Bid Amount Dollars ($ 10%), being not less than ten percent (10%) of the total bid price, including alternate, in lawful money of the United States of America, for the payment of which sum well and truly to be made, we bind ourselves, our heirs, executors, administrators, successors, and assigns, jointly and severally, firmly by these presents.

THE CONDITION OF THIS OBLIGATION IS SUCH THAT, if the hereby bound Principal is awarded a contract for the work by the City and, within the time and in the manner required by the bidding specifications, enters into the written form of contract included with bidding specifications, furnishes the required bonds, one to guarantee faithful performance and the other to guarantee payment for labor and materials, and furnishes the required insurance coverage, then this obligation shall become null and void; otherwise, it shall be and remain in full force and effect.

In case suit is brought upon this bond, Surety further agrees to pay all court costs incurred by the City in the suit and reasonable attorneys' fees in an amount fixed by the court.

IN WITNESS WHEREOF, this instrument has been duly executed by Principal and Surety, on the date set forth below, the name of each corporate party being hereto affixed and these presents duly signed by its undersigned representative(s) pursuant to authority of its governing body.

Dated: February 18, 2025

"Principal" Company Name:	"Surety" Company Name
Fidelity Builders, Inc.	Philadelphia Indemnity Insurance Company
1824 Oakwood Avenue, Glendale, CA 91208	One Bala Plaza, Suite 100, Bala Cynwyd, PA 19004-1403
By:	By:
Name: Narek Halablian	Name: John D. Weisbrot, Attorney-In-Fact
Its: Vice President	Its: Attorney-In-Fact
By:	By:
Name:	Name:
Its:	Its:
(Seal)	(Seal)

Note: This bond must be dated, all signatures must be notarized, and evidence of the authority of any person signing as attorney-in-fact must be attached.

ACKNOWLEDGMENT

A notary public or other officer completing this certificate verifies only the identity of the individual who signed the document to which this certificate is attached, and not the truthfulness, accuracy, or validity of that document.

State of California
County of Los Angeles)

On 02/18/2025 before me, Elen Shakhgeldyan, Notary Public
(insert name and title of the officer)

personally appeared Norek Yephia K Kolabian,
who proved to me on the basis of satisfactory evidence to be the person(s) whose name(s) is/are subscribed to the within instrument and acknowledged to me that he/she/they executed the same in his/her/their authorized capacity(ies), and that by his/her/their signature(s) on the instrument the person(s), or the entity upon behalf of which the person(s) acted, executed the instrument.

I certify under PENALTY OF PERJURY under the laws of the State of California that the foregoing paragraph is true and correct.

WITNESS my hand and official seal.

ELEN SHAKHGELDYAN
Notary Public - California
Los Angeles County
Commission # 2494869
My Comm. Expires Jul 18, 2028

Signature _____ (Seal)

ACKNOWLEDGMENT

A notary public or other officer completing this certificate verifies only the identity of the individual who signed the document to which this certificate is attached, and not the truthfulness, accuracy, or validity of that document.

State of Pennsylvania
County of Bucks

On February 18, 2025 before me, Tracy Konopka, Notary Public
(insert name and title of the officer),

personally appeared John D. Weisbrot, Attorney-In-Fact, who proved to me on the basis of satisfactory evidence to be the person whose name is subscribed to the within instrument and acknowledged to me that he executed the same in his authorized capacity(ies), and that by his signature on the instrument the person, or the entity upon behalf of which the person acted, executed the instrument.

I certify under PENALTY OF PERJURY under the laws of the Commonwealth of Pennsylvania that the foregoing paragraph is true and correct.

WITNESS my hand and official seal.

Commonwealth of Pennsylvania - Notary Seal
TRACY KONOPKA - Notary Public
Bucks County
My Commission Expires December 3, 2026
Commission Number 1259261

Signature Tracy Konopka (Seal)
Notary Public

PHILADELPHIA INDEMNITY INSURANCE COMPANY
One Bala Plaza, Suite 100
Bala Cynwyd, PA 19004-0950

Power of Attorney

KNOW ALL PERSONS BY THESE PRESENTS: That **PHILADELPHIA INDEMNITY INSURANCE COMPANY** (the Company), a corporation organized and existing under the laws of the Commonwealth of Pennsylvania, does hereby constitute and appoint JOHN D. WEISBROT, MELISSA L. MCDADE, STEVEN M. VARGA OR NANCY NIGRO of Risk Strategies dba JW Bond Consultants, Inc.,_ its true and lawful Attorney-in-fact with full authority to execute on its behalf bonds, undertakings, recognizances and other contracts of indemnity and writings obligatory in the nature thereof, issued in the course of its business and to bind the Company thereby, in an amount not to exceed **$50,000,000.**

This Power of Attorney is granted and is signed and sealed by facsimile under and by the authority of the following Resolution adopted by the Board of Directors of PHILADELPHIA INDEMNITY INSURANCE COMPANY on the 14th of November 2016.

RESOLVED: That the Board of Directors hereby authorizes the President or any Vice President of the Company: (1) Appoint Attorney(s) in Fact and authorize the Attorney(s) in Fact to execute on behalf of the Company bonds and undertakings, contracts of indemnity and other writings obligatory in the nature thereof and to attach the seal of the Company thereto; and (2) to remove, at any time, any such Attorney-in-Fact and revoke the authority given. And, be it

FURTHER RESOLVED: That the signatures of such officers and the seal of the Company may be affixed to any such Power of Attorney or certificate relating thereto by facsimile, and any such Power of Attorney so executed and certified by facsimile signatures and facsimile seal shall be valid and binding upon the Company in the future with respect to any bond or undertaking to which it is attached.

IN TESTIMONY WHEREOF, PHILADELPHIA INDEMNITY INSURANCE COMPANY HAS CAUSED THIS INSTRUMENT TO BE SIGNED AND ITS CORPORATE SEALTO BE AFFIXED BY ITS AUTHORIZED OFFICE THIS 5TH DAY OF OCTOBER 2024.

(Seal)

John Glomb, President & CEO
Philadelphia Indemnity Insurance Company

On this 5th day of October, 2024 before me came the individual who executed the preceding instrument, to me personally known, and being by me duly sworn said that he is the therein described and authorized officer of the **PHILADELPHIA INDEMNITY INSURANCE COMPANY**; that the seal affixed to said instrument is the Corporate seal of said Company; that the said Corporate Seal and his signature were duly affixed.

Commonwealth of Pennsylvania - Notary Seal
Vanessa Mckenzie, Notary Public
Delaware County
My commission expires November 3, 2028
Commission number 1366394
Member, Pennsylvania Association of Notaries

Notary Public: Vanessa McKenzie

residing at: Linwood, PA

My commission expires: November 3, 2028

I, Edward Sayago, Corporate Secretary of PHILADELPHIA INDEMNITY INSURANCE COMPANY, do hereby certify that the foregoing resolution of the Board of Directors and the Power of Attorney issued pursuant thereto on the 5th day October 2024 are true and correct and are still in full force and effect. I do further certify that John Glomb, who executed the Power of Attorney as President, was on the date of execution of the attached Power of Attorney the duly elected President of PHILADELPHIA INDEMNITY INSURANCE COMPANY.

In Testimony Whereof I have subscribed my name and affixed the facsimile seal of each Company this 18th day of February, 2025.

Edward Sayago, Corporate Secretary
PHILADELPHIA INDEMNITY INSURANCE COMPANY

DocuSign Envelope ID: 67AEBF1D-E760-434A-9F39-270B831C01F1

PHILADELPHIA INDEMNITY INSURANCE COMPANY

Statutory Statements of Admitted Assets, Liabilities and Capital and Surplus
(in thousands, except par value and share amounts)

Admitted Assets	As of December 31, 2023	2022
Bonds (fair value $8,720,743 and $7,902,637)	$ 9,263,769	$ 8,709,823
Preferred stocks (fair value $8,060 and $14,560)	8,060	14,560
Common stocks (cost $18,727 and $24,136)	21,946	28,395
Mortgage loans	1,060,940	1,074,734
Real estate	21,033	21,779
Other invested assets (cost $201,673 and $212,500)	226,716	234,138
Receivables for securities sold	4,072	476
Cash, cash equivalents and short-term investments	147,539	95,212
Cash and invested assets	10,754,075	10,179,117
Premiums receivable, agents' balances and other receivables	1,108,771	955,218
Reinsurance recoverable on paid loss and loss adjustment expenses	57,589	64,607
Accrued investment income	93,350	88,001
Receivable from affiliates	7,123	4,406
Federal income taxes receivable	-	21,231
Net deferred tax assets	162,612	150,526
Other assets	11,103	11,196
Total admitted assets	$ 12,194,623	$ 11,474,302

Liabilities and Capital and Surplus		
Liabilities:		
Unpaid loss and loss adjustment expenses	$ 5,797,285	$ 5,680,508
Unearned premiums	1,887,004	1,766,050
Reinsurance payable on paid loss and loss adjustment expenses	35,204	39,160
Federal income taxes payable	2,352	-
Ceded reinsurance premiums payable	152,393	119,157
Commissions payable, contingent commissions and other similar charges	298,124	247,996
Funds held	96,542	82,555
Payable to affiliates	20,862	21,337
Provision for reinsurance	295	678
Payable for securities purchased	12,957	42,426
Accrued expenses and other liabilities	62,438	58,292
Total liabilities	8,365,456	8,058,159
Capital:		
Common stock, par value of $10 per share; 1,000,000 shares authorized, 450,000 shares issued and outstanding	4,500	4,500
Surplus:		
Gross paid-in and contributed surplus	386,071	386,071
Unassigned surplus	3,438,596	3,025,572
Total surplus	3,824,667	3,411,643
Total capital and surplus	3,829,167	3,416,143
Total liabilities and capital and surplus	$ 12,194,623	$ 11,474,302

The undersigned, being duly sworn, says: That she is the Executive Vice President and Chief Financial Officer of Philadelphia Indemnity Insurance Company; that said Company is a corporation duly organized in the state of Pennsylvania, and licensed and engaged in the State of Pennsylvania and has duly complied with all the requirements of the laws of the said State applicable of the said Company and is duly qualified to act as Surety under such laws; that said Company has also complied with and is duly qualified to act as Surety under the Act of Congress. And that to the best of her knowledge and belief the above statement is a full, true and correct statement of

Attest:

Commonwealth of Pennsylvania - Notary Seal
Kimberly A. Kessleski, Notary Public
Montgomery County
My commission expires December 18, 2024
Commission number 1245769
Member, Pennsylvania Association of Notaries

DocuSigned by:
Karen Gilmer-Pauciello
7A9000FFEA4D4E9...
Karen Gilmer-Pauciello, EVP & CFO

Sworn to before me this 5th day of June 2024.

Kimberly Kessleski, Notary

PHILADELPHIA INDEMNITY INSURANCE COMPANY CORPORATE SEAL 1927 PENNSYLVANIA

BID PACKAGE TENNIS COURT ADA IMPROVEMENT PROJECT

CITY OF ROLLING HILLS

TENNIS COURT ADA IMPROVEMENT PROJEC:

Project No: 2025-01

Contact Information

Christian Horvath

310.377.1521

chorvath@cityofrh.net

RECEIVED
FEB 18 2025
City of Rolling Hills
by _____

RAMSA CONSTRUCTION INC.

14014 Moorpark St. #320 Sherman Oaks CA 91423

Mehdi Sadat AKhavi

818.274.2455

Contact@ramsaconst.com

PROPOSAL

Date: Feb 17, 2025

Tennis Court ADA Improvement Project, Job No. 2025-01

TO THE CITY OF ROLLING HILLS, ROLLING HILLS, CALIFORNIA

Pursuant to the foregoing Notice to Contractors, the undersigned bidder herewith submits a proposal on the bidding form or forms attached hereto and made a part hereof, and binds himself on award by the City of Rolling Hills under this proposal to execute in accordance with such award a contract, of which this proposal and the said Notice to Contractors, Instructions to Bidders, Specifications, and drawings shall be a part, and to furnish the bond or bonds required by the Specifications. The attached Notice to Contractors, Instructions to Bidders, Specifications, and drawings are made a part of this proposal and all provisions thereof are hereby accepted.

The bidder acknowledges that the Instructions to Bidders provides, among other things, that the Contract shall be terminated and the bid bond forfeited if the contractor fails to provide the applicable insurance certificates and bonds within the time set forth in Section 21 of the Instructions to Bidders.

The bidder further agrees that, in case of his/her default in executing the required contract and the required bond or bonds, or furnishing the required insurance, the money payable under the bid bond accompanying his proposal shall be applied by the City towards payment of the damage to the City on account of such default, as provided in the specifications.

(CORPORATE SEAL OR NOTARIAL ACKNOWLEDGEMENTS OF SIGNATURE - IF PARTNERSHIP OR PROPRIETORSHIP)

Firm RAMSA Construction, Inc.

By Mehdi Sadat Akhavi

(Signature)

Name/Title Mehdi Sadat Akhavi / President

Address 14014 Moorpark St,#320 Sherman Oaks

Zip CA, 91423

Phone (818) 274 2455

E-mail: cityclerk@cityofrh.net

Nature of firm (corporation, partnership, etc.) and names of individual members of the firm, or names and titles of officers of the corporation.

President And Officers: Mehdi Sadat Akhavi

Corporation organized under the laws of the State of: California

BIDDERS PROPOSAL

Name of Bidder: RAMSA Construction, Inc. The undersigned, having examined the proposed Contract Documents titled:

Tennis Court ADA Improvement Project, Job No. 2025-01

and having visited the site and examined the conditions affecting the work, hereby proposes and agrees to furnish all labor, materials, equipment, and appliances, and to perform operations necessary to complete the work as required by said proposed Contract Documents as itemized below:

PROJECT BID SCHEDULE - SEE AND COMPLETE SEPARATE EXCEL FILE

BASE BID:

Seven hundred and ninety eight thousand four hundred twelve dollars and fifty cents only ($ 798,412.50)

Base Bid Total Sum in Words Base Bid — Total Sum in Figures

The City reserves the right to request the unit price of some or all contract items.

RAMSA Construction, Inc. — Bid Bond 10%

Name of Bidder — Amount of Certified Check/Bidder's Bond

14014 Moorpark St, #320 Sherman Oaks CA 91423 — Merchants Bonding Company

Address — Name of Bonding Company

The price shall include all State, Federal, and other taxes applicable to the project, and shall be a firm offer for a period of Ninety (90) days after the date of bid opening.

BID BOND

Bond No. : CSBA-29855 **KNOW ALL PERSONS BY THESE PRESENTS** that:

WHEREAS the City of Rolling Hills, California ("City"), has issued an invitation for bids for the work described as follows:

Tennis Court ADA Improvement Project, Job No. 2025-01

WHEREAS Ramsa Construction, Inc

14014 Moorpark St., #320, Sherman Oaks, CA 91423
(Name and address of bidder)

("Principal"), desires to submit a bid to City or the work.

WHEREAS, bidders are required, under the terms of the Section 20170 of the California Public Contract Code, to furnish a form of bidder's security with their bid.

NOW, THEREFORE, we, the undersigned Principal, and Merchants Bonding Company (Mutual)

6700 Westown Parkway, West Des Moines, IA 50266
(Name and address of Surety)

("Surety") a duly admitted surety insurer under the laws of the State of California, as Surety, are held and firmly bound unto the City in the penal sum of Ten Percent of the Amount Bid Dollars ($10%), being not less than ten percent (10%) of the total bid price, including alternate, in lawful money of the United States of America, for the payment of which sum well and truly to be made, we bind ourselves, our heirs, executors, administrators, successors, and assigns, jointly and severally, firmly by these presents.

THE CONDITION OF THIS OBLIGATION IS SUCH THAT, if the hereby bound Principal is awarded a contract for the work by the City and, within the time and in the manner required by the bidding specifications, enters into the written form of contract included with bidding specifications, furnishes the required bonds, one to guarantee faithful performance and the other to guarantee payment for labor and materials, and furnishes the required insurance coverage, then this obligation shall become null and void; otherwise, it shall be and remain in full force and effect.

In case suit is brought upon this bond, Surety further agrees to pay all court costs incurred by the City in the suit and reasonable attorneys' fees in an amount fixed by the court.

IN WITNESS WHEREOF, this instrument has been duly executed by Principal and Surety, on the date set forth below, the name of each corporate party being hereto affixed and these presents duly signed by its undersigned representative(s) pursuant to authority of its governing body.

Dated: February 12th, 2025

"Principal" Company Name:	"Surety" Company Name
Ramsa Construction, Inc	Merchants Bonding Company (Mutual)
14014 Moorpark St., #320, Sherman Oaks, CA 91423	6700 Westown Parkway, West Des Moines, IA 50266
By:	By:
Name: Mehdi Sadat Akhavi	Name: Frank Morones
Its:	Its: Attorney-in-Fact
By:	By:
Name:	Name:
Its:	Its:

(Seal) (Seal)

Note: This bond must be dated, all signatures must be notarized, and evidence of the authority of any person signing as attorney-in-fact must be attached.

ACKNOWLEDGMENT

A notary public or other officer completing this certificate verifies only the identity of the individual who signed the document to which this certificate is attached, and not the truthfulness, accuracy, or validity of that document.

State of California
County of Orange)

On 02/12/2025 before me, Melissa Ann Vaccaro, Notary Public
(insert name and title of the officer)

personally appeared Frank Morones,
who proved to me on the basis of satisfactory evidence to be the person(s) whose name(s) is/are subscribed to the within instrument and acknowledged to me that he/she/they executed the same in his/her/their authorized capacity(ies), and that by his/her/their signature(s) on the instrument the person(s), or the entity upon behalf of which the person(s) acted, executed the instrument.

I certify under PENALTY OF PERJURY under the laws of the State of California that the foregoing paragraph is true and correct.

WITNESS my hand and official seal.

MELISSA ANN VACCARO
COMM. #2401942
Notary Public-California
ORANGE COUNTY
My Comm. Expires May 12, 2026

Signature _____ (Seal)
Melissa Ann Vaccaro

Bond No. CSBA-29855

MERCHANTS BONDING COMPANY

POWER OF ATTORNEY

Know All Persons By These Presents, that MERCHANTS BONDING COMPANY (MUTUAL) and MERCHANTS NATIONAL BONDING, INC., both being corporations of the State of Iowa, d/b/a Merchants National Indemnity Company (in California only) (herein collectively called the "Companies") do hereby make, constitute and appoint, individually,

Adrian Langrell; Arturo Ayala; Ben Stong; Benjamin Wolfe; Chelsea Liberatore; Daniel Huckabay; Dwight Reilly; Frank Morones; Michael D Stong; R Nappi; Shaunna Rozelle Ostrom

their true and lawful Attorney(s)-in-Fact, to sign its name as surety(ies) and to execute, seal and acknowledge any and all bonds, undertakings, contracts and other written instruments in the nature thereof, on behalf of the Companies in their business of guaranteeing the fidelity of persons, guaranteeing the performance of contracts and executing or guaranteeing bonds and undertakings required or permitted in any actions or proceedings allowed by law.

This Power-of-Attorney is granted and is signed and sealed by facsimile under and by authority of the following By-Laws adopted by the Board of Directors of Merchants Bonding Company (Mutual) on April 23, 2011 and amended August 14, 2015 and April 27, 2024 and adopted by the Board of Directors of Merchants National Bonding, Inc., on October 16, 2015 and amended on April 27, 2024.

"The President, Secretary, Treasurer, or any Assistant Treasurer or any Assistant Secretary or any Vice President shall have power and authority to appoint Attorneys-in-Fact, and to authorize them to execute on behalf of the Company, and attach the seal of the Company thereto, bonds and undertakings, recognizances, contracts of indemnity and other writings obligatory in the nature thereof."

"The signature of any authorized officer and the seal of the Company may be affixed by facsimile or electronic transmission to any Power of Attorney or Certification thereof authorizing the execution and delivery of any bond, undertaking, recognizance, or other suretyship obligations of the Company, and such signature and seal when so used shall have the same force and effect as though manually fixed."

In connection with obligations in favor of the Florida Department of Transportation only, it is agreed that the power and aut hority hereby given to the Attorney-in-Fact includes any and all consents for the release of retained percentages and/or final estimates on engineering and construction contracts required by the State of Florida Department of Transportation. It is fully understood that consenting to the State of Florida Department of Transportation making payment of the final estimate to the Contractor and/or its assignee, shall not relieve this surety company of any of its obligations under its bond.

In connection with obligations in favor of the Kentucky Department of Highways only, it is agreed that the power and authority hereby given to the Attorney-in-Fact cannot be modified or revoked unless prior written personal notice of such intent has been given to the Commissioner-Department of Highways of the Commonwealth of Kentucky at least thirty (30) days prior to the modification or revocation.

In Witness Whereof, the Companies have caused this instrument to be signed and sealed this 30th day of July , 2024

MERCHANTS NATIONAL BONDING, INC. INCORPORATED -o- 2003

MERCHANTS BONDING COMPANY (MUTUAL) INCORPORATED -o- 1933

MERCHANTS BONDING COMPANY (MUTUAL)
MERCHANTS NATIONAL BONDING, INC.
d/b/a MERCHANTS NATIONAL INDEMNITY COMPANY

By Larry Taylor
President

STATE OF IOWA
COUNTY OF DALLAS ss.

On this 30th day of July 2024 , before me appeared Larry Taylor, to me personally known, who being by me duly sworn did say that he is President of MERCHANTS BONDING COMPANY (MUTUAL) and MERCHANTS NATIONAL BONDING, INC.; and that the seals affixed to the foregoing instrument are the Corporate Seals of the Companies; and that the said instrument was signed and sealed in behalf of the Companies by authority of their respective Boards of Directors.

NOTARIAL SEAL IOWA

Penni Miller
Commission Number 787952
My Commission Expires
January 20, 2027

Notary Public

(Expiration of notary's commission does not invalidate this instrument)

I, Elisabeth Sandersfeld, Secretary of MERCHANTS BONDING COMPANY (MUTUAL) and MERCHANTS NATIONAL BONDING, INC., do hereby certify that the above and foregoing is a true and correct copy of the POWER-OF-ATTORNEY executed by said Companies, which is still in full force and effect and has not been amended or revoked.

In Witness Whereof, I have hereunto set my hand and affixed the seal of the Companies on this 12th day of February ,2025 .

MERCHANTS NATIONAL BONDING, INC. INCORPORATED -o- 2003

MERCHANTS BONDING COMPANY (MUTUAL) INCORPORATED -o- 1933

Secretary

POA 0018 (6/24)

CALIFORNIA ALL-PURPOSE ACKNOWLEDGMENT CIVIL CODE § 1189

A notary public or other officer completing this certificate verifies only the identity of the individual who signed the document to which this certificate is attached, and not the truthfulness, accuracy, or validity of that document.

State of California
County of Los Angeles

On February 13, 2025 (Date) before me, Giovanni Jaramillo (Here Insert Name and Title of the Officer)

personally appeared Mehdi Sadat Akhavi (Name(s) of Signer(s))

who proved to me on the basis of satisfactory evidence to be the person(s) whose name(s) is/are subscribed to the within instrument and acknowledged to me that he/she/they executed the same in his/her/their authorized capacity(ies), and that by his/her/their signature(s) on the instrument the person(s), or the entity upon behalf of which the person(s) acted, executed the instrument.

GIOVANNI JARAMILLO
Notary Public - California
Los Angeles County
Commission # 2508663
My Comm. Expires Jan 3, 2029

I certify under PENALTY OF PERJURY under the laws of the State of California that the foregoing paragraph is true and correct.

WITNESS my hand and official seal.

Signature _____ (Signature of Notary Public)

Place Notary Seal and/or Stamp Above

OPTIONAL

Completing this information can deter alteration of the document or fraudulent reattachment of this form to an unintended document.

Description of Attached Document

Title or Type of Document: Bid Bond

Document Date: 2/12/25 Number of Pages: _____

Signer(s) Other Than Named Above: _____

Capacity(ies) Claimed by Signer(s)

Signer's Name: _____	Signer's Name: _____
☐ Corporate Officer – Title(s): _____	☐ Corporate Officer – Title(s): _____
☐ Partner – ☐ Limited ☐ General	☐ Partner – ☐ Limited ☐ General
☐ Individual ☐ Attorney in Fact	☐ Individual ☐ Attorney in Fact
☐ Trustee ☐ Guardian of Conservator	☐ Trustee ☐ Guardian of Conservator
☐ Other: _____	☐ Other: _____
Signer is Representing: _____	Signer is Representing: _____

©2017 National Notary Association

Bidders Qualifications and References

Name of Bidder RAMSA Construction, Inc.

THE BIDDER SHALL COMPLETE THE FOLLOWING STATEMENTS:

1. The bidder has been engaged in the contracting business, under the present business name, for 6 years.

2. Experience in work of a nature similar to that covered in the Proposal extends over a period of 12 years.

3. The bidder, as a contractor, has never failed to satisfactorily complete a contract awarded to him, except as follows (Name any and all exceptions and reasons therefore):

N/A

4. Contractor's License Number, State of California 1107423 Class B

5. Contractor's License Expiration Date 07/31/2025

6. Department of Industrial Relations (DIR) Registration Number 1001112185

7. The following contracts have been satisfactorily completed in the last three years for the persons, firm, or authority indicated; and to whom reference is made. (Name five contracts and include the total contract amount as well as the original bid amount for each contract.)

	YEAR	TYPE OF WORK	FINAL CONTRACT AMOUNT	ORIGINAL CONTRACT AMOUNT	LOCATION AND FOR WHOM PERFORMED
A	2024	Playground replacement	$589,761.22	$ 564,350	East Los Angeles College
B	2024	Shade Structure Installation	$846,124.35	$804,700.00	Long Beach PH4
C	2024-25	Shade Structure Installation	$341,350.00	$296,000.00	Long Beach PH3A
D	2023	Concrete work	$ 251,000.00	$235,000.00	Santa Paula Police department
E	2023	New Construction	$925,000.00	$925,000.00	Redondo Beach

8. The following persons may be contacted for information concerning the contract work listed above (list a reference for each contract named).

	NAME	TITLE	ADDRESS	TELEPHONE
A	Chris Griffin	Project Manager	770 Wilshire Blvd 6th floor Los Angeles CA 90017	(626) 658 5812
B	Adam Lafreniere	Project Manager	2425 Webster Ave., Long Beach CA 90810	(562) 756 8317
C	Saliba Toro	Project Manager	2425 Webster Ave., Long Beach CA 90810	(714) 512 4721
D	Gus Kamoi	Project Manager	214 S 10th St, Santa Paula CA 93060	(310) 486 8201
E	Mansoureh Soltani	Owner	1432 S Irena Ave, Redondo Beach CA 90277	(310) 916 5683

9. Reference is hereby made to the following bank or banks as to the financial responsibility of the bidder:

Bank _____ Branch _____

Bank _____ Branch _____

Bank _____ Branch _____

10. Reference is hereby made to the following surety company or companies as to the financial responsibility and general reliability of the bidder:

Surety Company Merchants Bonding - Frank Morones Phone (714) 627-4586

Surety Company _____ Phone _____

11. Following is a list of plant and equipment that is owned by the bidder and is definitely available for use on the proposed project:

QUANTITY	NAME, TYPE, AND CAPACITY	CONDITION	LOCATION
1	CAT - Excavator	Good	Van Nuys
1	CAT - Skid Loader	Good	Van Nuys

(Attach additional sheets as necessary)

12. All of the above statements as to experience, financial qualifications, and available plant and equipment are submitted in conjunction with the proposal, as a part thereof, and the truthfulness and accuracy of the information is guaranteed by the bidder.

Signature of Bidder _____

Name/Title: Mehdi Sadat Akhavi

DESIGNATION OF SUBCONTRACTORS

NAME OF BIDDER RAMSA Construction, Inc.

In compliance with the provisions of the Subletting and Subcontracting Fair Practices Act (Division 2, Part 1), Chapter 4 of the Public Contract Code of the State of California, and any amendments thereof), each bidder shall set forth below:

1. The name and location of the place of business of each subcontractor who will perform work or labor or render service to the Contractor in or about the construction of the work or improvement, or a subcontractor licensed in the State of California who, under subcontract to the Contractor, specially fabricates and installs a portion of the work or improvement according to detailed drawings contained in the plans and specifications, in an amount in excess of one-half of one percent of the Contractor's total bid.

2. The portion and estimated dollar amount of the work which will be done by each subcontractor. The Contractor shall list only one subcontractor for each portion as is defined by the Contractor in his bid.

Please type or legibly print (attach additional sheets as necessary).

Name of Subcontractor	City	Portion	Estimated $ Amount
Name: C&P Construction License No. 604931 License Class C36 DIR Registration No. 1000001078	Los Angeles	Plumbing	$36,000.00
Name: C&P Construction License No. 604931 License Class C10 DIR Registration No. 1000001078	Los Angeles	Electrical	$69,700.00
Name: ALARCON SONS, INC. License No. 659255 License Class C12 DIR Registration No. 1000585636	BALDWIN PARK	Concert and Paving work	$372,500.00
Name: License No. License Class DIR Registration No.			
Name: License No. License Class DIR Registration No.			
Name: License No. License Class DIR Registration No.			

Circumvention by the Contractor of the requirement under Section 4104 of the Public Contract Code to list his subcontractors, by the device of listing another contractor who will in turn sublet portions constituting the majority of the work covered by this contract, shall be considered a violation of Division 2, Part 1, Chapter 4 of the Public Contract Code and shall subject the Contractor to the penalties set forth in Sections 4110 and 4111 of the Public Contract Code.

If the Contractor fails to specify a subcontractor or if the Contractor specifies more than one subcontractor for the same portion for work to be performed under the contract in excess of one-half of one percent of the Contractor's total bid, he agrees that he/she is fully qualified to perform that portion himself/herself, and that he/she shall perform that portion himself/herself. If after award of contract, the Contractor subcontracts, except as provided for in Sections 4107 or 4109 of the Public Contract Code, any such portion of the work, the Contractor shall be subject to the penalties named in Section 4111 of the Public Contract Code.

The Contractor shall not:

A. Substitute any person as subcontractor in place of the subcontractor listed in the original bid, except that the City may, except as otherwise provided in Section 4107.5 of the Public Contract Code, consent to the substitution of another person as subcontractor:

    1. When the subcontractor listed in the bid, after having had a reasonable opportunity to do so, fails or refuses to execute a written contract, based upon the general terms, conditions, plans and specifications for the project involved or the terms of such contractor's written bid, is presented to him/her by the Contractor, or
    2. When the listed subcontractor becomes bankrupt or insolvent, or
    3. When the listed subcontractor fails or refuses to perform his/her subcontract, or
    4. When the listed subcontractor fails or refuses to meet the bond requirements of the Contractor as set forth in Section 43108 of the Public Contract Code, or
    5. When the Contractor demonstrates to the City, subject to the further provisions set forth in Section 4107.5 of the Public Contract Code, that the name of the subcontractor was listed as the result of an inadvertent clerical error, or
    6. When the listed subcontractor is not licensed pursuant to the Contractors License Law, or
    7. When the City determines that the work performed by the listed subcontractor is substantially unsatisfactory and not in substantial accordance with the plans and specifications, or that the subcontractor is substantially delaying or disrupting the progress of the work.

B. Permit any subcontract to be voluntarily assigned or transferred or allow it to be performed by anyone other than the original subcontractor listed in the original bid, without the consent of the City.
C. Other than in the performance of "change orders" causing changes or deviations from the original contract, sublet or subcontract any portion of the work in excess of one-half

of one percent of the Contractor's total bid as to which his original bid did not designate a subcontractor.

Prior to approval of a Contractor's request for a subcontractor substitution, the City will give notice in writing to the listed subcontractor of the Contractor's request to substitute and of the reason for the request. The notice will be served by certified or registered mail to the last known address of the subcontractor. The listed subcontractor who has been so notified shall have five working days within which to transmit to the City written objections to the substitution. Failure to file these written objections shall constitute the listed subcontractor's consent to the substitution.

If written objections are filed, the City will give notice in writing of at least five working days to the listed subcontractor of a hearing by the City on the Contractor's request for substitution.

The Contractor, as a condition to asserting a claim of inadvertent clerical error in the listing of a subcontractor, shall within two working days after the time of the bid opening by the City, give written notice to the City and copies of such notice to both the subcontractor he claims to have listed in error and the intended subcontractor who had bid to the Contractor prior to the bid opening.

Subletting or subcontracting of any portion of the work in excess of one-half of one percent of the Contractor's total bid as to which no subcontractor was designated in the original bid shall only be permitted in cases of public emergency or necessity, and then only after a finding reduced to writing as a public record of the City setting forth the facts constituting the emergency or necessity.

If the Contractor violates any of the provisions of Division 2, Part 1, Chapter 4 of the Public Contract Code or any amendments thereof, the Contractor violates his contract and the City may exercise the option, in its own discretion, of (1) canceling its contract, or (2) assessing the Contractor a penalty in an amount not more than ten percent of the amount of the subcontract involved, and this penalty shall be deposited in the fund out of which the prime contract is awarded. In any proceedings under Section 4110 of the Public Contract Code the Contractor shall be entitled to a public hearing and to five days' notice of the time and place thereof.

Contractor's Affidavit of Non-collusion

STATE OF CALIFORNIA)
) **SS**
COUNTY OF LOS ANGELES)

Mehdi Sadat Akhavi being first duly sworn, deposes and says:

1. That he/~~she~~ is the President (Title of office if a corporation: "sole owner," "Partner," or other proper title) of RAMSA Construction, Inc., hereinafter called "Contractor", who has submitted to the City of Rolling Hills a proposal for the construction of **Tennis Court ADA Improvement Project, Job No. 2025-01**;

2. That said proposal is genuine; that the same is not sham; that all statements of fact therein are true;

3. That such proposal was not made in the interest or behalf of any person, partnership, company, association, organization, or corporation not named or disclosed.

4. That the Contractor did not, directly or indirectly induce, solicit or agree with anyone else to submit a false or sham bid, to refrain from bidding, or withdraw his/her bid, to raise or fix the bid price of the Contractor price or of anyone else, or to raise or fix any overhead profit, or cost element of the Contractor's price or the price of anyone else; and did not attempt to induce action prejudicial to the interest of the City of Rolling Hills, or of any other bidder, or anyone else interested in the proposed contract;

5. That the Contractor has not in any manner sought by collusion to secure for himself/herself an advantage over any other bidders or induce action prejudicial to the interests of the City of Rolling Hills or of any other bidder, or anyone else interested in the proposed contract;

6. That the Contractor has not accepted any bid from any subcontractor or material man through any bid depository, the bylaws, rules or regulations, of which prohibit or prevent the Contractor from considering any bid from any subcontractor or material man, which is not processed through said bid depository, or which prevent any subcontractor or material man from bidding to any Contractor who does not use facilities of or accept bids from or through such bid depository;

7. That the Contractor has not been debarred from participation in any state or federal public works project.

8. That the Contractor did not, directly or indirectly, submit the Contractor's bid price or any breakdown thereof, or the contents thereof, or divulge information or data relative thereto

to any corporation, partnership, company, association, organization, bid depository, or to any member or agent thereof, or to any individual or group of individuals, except to the City of Rolling Hills, or to any person or persons who have partnership or other financial interest with said Contractor in his business.

Dated this 17 day of FEB 2025

RAMSA Construction, Inc.
_____ Contractor

_____ Signature

Mehdi Sadat Akhavi / President
_____ Name/Title

See Attached Certificate

SUBSCRIBED AND SWORN TO BEFORE ME

ON _____

_____
Notary Public in and for the County of Los Angeles, State of California

Place Notary Seal Above

JURAT

A notary public or other officer completing this certificate verifies only the identity of the individual who signed the document to which this certificate is attached, and not the truthfulness, accuracy, or validity of that document.

State of California
County of Los Angeles

Subscribed and sworn to (or affirmed) before me on
this 17th day of February, 20 25,
by Mehdi Sadat Akhavi

proved to me on the basis of satisfactory evidence to be the person(s) who appeared before me.

Signature _____

CARLOS PEREZ
Notary Public - California
Los Angeles County
Commission # 2498409
My Comm. Expires Aug 23, 2028

(Seal)

Pre-Bid Site Inspection Certification

Tennis Court ADA Improvement Project, Job No. 2025-01

The bidder hereby certifies that he or she and his or her Subcontractors have inspected the work site of the above project, and have fully acquainted themselves with all conditions and matters which might in any way affect the work, time of completion or the cost thereof. The bidder also certifies he or she has observed the designated Contractor Work Areas and access routes.

BIDDER:

Company Name: RAMSA Construction, Inc.

Signature: _____

Name/Title: Mehdi Sadat Akhavi / President

Date: 02/17/25

BIDDER'S INSPECTORS:

Name: Mehdi Sadat Akhavi

Title: President

Date of Inspection: 01.29.25

Name: _____

Title: _____

Date of Inspection: _____

Workers' Compensation Certificate

Tennis Court ADA Improvement Project, Job No. 2025-01

The bidder hereby certifies that he or she is aware of the provisions of Section 3700 of the Labor Code which requires every employer to be insured against liability for workers' compensation or to undertake self-insurance in accordance with the provisions of that code, and will comply with such provisions before commencing the performance of any work on the above project.

BIDDER:

Company Name: RAMSA Construction, Inc.

Signature: _____

Name/Title: Mehdi Sadat Akhavi / President

Date: 02/17/2025

DETAILED BID BREAKDOWN FORM

Owner: City of Rolling Hills
Project Type: ADA City Project
Contractor: _____

Bergeman GROUP
www.bergemangroup.com

ITEM NUMBER	ITEM DESCRIPTION	INDICATE "SELF-PERFORMED" OR NAME SUBCONTRACTOR	QUANTITY	UNIT OF MEASURE	UNIT COST	TOTAL COST
GENERAL CONDITIONS						
1	Mobilization & Demobilization (Onsite storage, Portable contractor restrooms, staging area, etc.)		1	Lump sum	N/A	$17,000.00
2	Safety, Hoisting, Materials Handling, Traffic Control & Debris Disposal		1	Lump sum	N/A	$25,000.00
3	Exterior Dust Control, Temporary Dust Fence & Protection of Non-Work Areas		1	Lump sum	N/A	$8,000.00
4	Daily Cleaning & Final Cleaning		1	Lump sum	N/A	$9,000.00
5	Building Permit Filing and Coordination By Contractor - Complete Contractor Statement and pick up Permit (fees related to permitting to be reimbursed to Contractor by Owner with no markup to Contractor)		1	Lump sum	N/A	$500.00
6	Construction Administration (OAC Meetings, Substantial Completion, and Final Completion Meetings, Submittals, RFIs, etc.)		1	Lump sum	N/A	$6,000.00
7	Demolition/Removals: all existing improvements, utilities, structures within the limits of work shown on plans GR2301100001 necessary to construct the improvements as shown on all plans associated with this project. City requires construction and demolition (C&D) permit for hauling and recycling from third parties and has recycling requirements. The City's franchise waste hauler, Republic Services, will take care of the C&D if they are used.		1	Lump sum	N/A	$52,000.00
				TOTAL: GENERAL CONDITIONS		$117,500.00

GRADING				*Quantities provided are estimated and for bidding purposes only		
ITEM NUMBER	ITEM DESCRIPTION	INDICATE "SELF-PERFORMED" OR NAME SUBCONTRACTOR	QUANTITY	UNIT OF MEASURE	UNIT COST	TOTAL COST
1	Rough grading needed per Grading plans.			SY	$0.00	$40,000.00
2	Install site drainage and erosion controls.		1	Lump sum	N/A	$21,000.00
3	Fine grading prior to putback commencement.			SY	$0.00	$25,000.00
				TOTAL: GRADING		$86,000.00

PAVING				*Quantities provided are estimated and for bidding purposes only		
ITEM NUMBER	ITEM DESCRIPTION	INDICATE "SELF-PERFORMED" OR NAME SUBCONTRACTOR	QUANTITY	UNIT OF MEASURE	UNIT COST	TOTAL COST
1	Install new pavement at new ADA Van accessible parking space per Architectural plans.			SY	$0.00	$11,000.00
2	Asphalt & Concrete Mix Designs & Batch Testing - For each type of asphalt and concrete to be used on the project, provide proposed mix designs and produce test batches showing compliance with City of Rolling Hills specifications.		1	Lump sum	N/A	$16,000.00
3	Paint cross wallks per Architectural plans.			LF	$0.00	$3,000.00
				TOTAL: PAVING		$30,000.00

ADA IMPROVEMENTS				*Quantities provided are estimated and for bidding purposes only		
ITEM NUMBER	ITEM DESCRIPTION	INDICATE "SELF-PERFORMED" OR NAME SUBCONTRACTOR	QUANTITY	UNIT OF MEASURE	UNIT COST	TOTAL COST
1	Install new ADA Van Parking space per plans plans. Striping, signage and painted ISA on pavement included. Refer to detail #17 and 18 on sheet A-602 of the Architectural plans.		1	Lump sum	N/A	$11,000.00
2	Install new wheel stop at new ADA Van parking space per detail #8 on sheet A-602 of the Architectural plans..			EA	$0.00	$1,500.00
3	Install new truncated domes at all ramp landings per detail #15 on sheet A-602 of the Architectural plans.			EA	$0.00	$9,500.00
4	Install new ramps and pathways, concrete curbs, retaining wall, and pavers per plans specs.			LF	$0.00	$65,000.00
5	Install new hand rails, nosing and warning strips per details #3, 5, 8 and 15 on sheet A-603 of the Architectural plans.			LF	$0.00	$55,000.00

6	Retaining Wall: ADA ramp (From Parking Area)			LF	$0.00	$30,000.00
7	Retaining Wall: ADA ramp (Tennis Court Viewing Area)			LF	$0.00	$35,000.00
8	Install ADA Lighting			Lump Sum	$0.00	$6,000.00
			TOTAL: ADA SITE IMPROVEMENTS			$213,000.00

CIVIL SITE IMPROVEMENTS					*Quantities provided are estimated and for bidding purposes only	
ITEM NUMBER	ITEM DESCRIPTION	INDICATE "SELF-PERFORMED" OR NAME SUBCONTRACTOR	QUANTITY	UNIT OF MEASURE	UNIT COST	TOTAL COST
1	Retaining Wall: Planters			LF	$0.00	$35,000.00
2	Landscape: Irrigation line sleeves			Lump sum	N/A	$4,000.00
3	Brick pavers			SY	$0.00	$41,000.00
			TOTAL: SITE IMPROVEMENTS			$80,000.00

STRUCTURAL					*Quantities provided are estimated and for bidding purposes only	
ITEM NUMBER	ITEM DESCRIPTION	INDICATE "SELF-PERFORMED" OR NAME SUBCONTRACTOR	QUANTITY	UNIT OF MEASURE	UNIT COST	TOTAL COST
1	Install all foundation plan components per plan specs.		1	Lump sum	N/A	$60,000.00
2	Strip all forms and cleanup once concrete has cured.		1	Lump sum	N/A	$3,500.00
3	Install all framing plan components per plan specs. Including Trellis adjacent to Cabana.		1	Lump sum	N/A	$7,000.00
4	Install Hardy Frame components per plan specs.		1	Lump sum	N/A	$7,000.00
			TOTAL: STRUCTURAL			$77,500.00

PLUMBING					*Quantities provided are estimated and for bidding purposes only	
ITEM NUMBER	ITEM DESCRIPTION	INDICATE "SELF-PERFORMED" OR NAME SUBCONTRACTOR	QUANTITY	UNIT OF MEASURE	UNIT COST	TOTAL COST
1	Installation of all rough plumbing per specs on plans.		1	Lump sum	N/A	$36,000.00
~~2~~	~~Installation of ADA hardware in restrooms.~~		~~1~~	~~Lump sum~~	~~N/A~~	~~$0.00~~
~~3~~	~~Installation of water heater tanks per specs on plans.~~			~~EA~~	~~$0.00~~	~~$0.00~~
~~4~~	~~Installation of all finish fixtures per specs on plans.~~		~~1~~	~~Lump sum~~	~~N/A~~	~~$0.00~~
			TOTAL: PLUMBING			$36,000.00

ELECTRICAL					*Quantities provided are estimated and for bidding purposes only	
ITEM NUMBER	ITEM DESCRIPTION	INDICATE "SELF-PERFORMED" OR NAME SUBCONTRACTOR	QUANTITY	UNIT OF MEASURE	UNIT COST	TOTAL COST
1	Installation of all rough electrical per specs on plans.		1	Lump sum	N/A	$55,000.00
2	Providing Title 24 specs on all materials used.		1	Lump sum	N/A	$5,000.00
3	Installation of fixtures embedded in concrete curbs per specs on plans.		1	Lump sum	N/A	$9,700.00
~~4~~	~~Installation of all finish fixtures per specs on plan. Including park lights.~~		~~1~~	~~Lump sum~~	~~N/A~~	~~$0.00~~
			TOTAL: ELECTRICAL			$69,700.00

PROJECT TOTALS	
TOTAL PROJECT CONSTRUCTION COSTS	$709,700.00

Performance & Payment Bond Percentage (%)	2.50%
Performance & Payment Bond Cost ($$)	$17,742.50
Contingency 10%	$70,970.00
TOTAL PROJECT CONSTRUCTION COSTS W/ PERFORMANCE & PAYMENT BONDS WITH CONTINGENCY	$798,412.50
TOTAL WORKING DAYS TO COMPLETE PROJECT	

ALTERNATES

ITEM NUMBER	ITEM DESCRIPTION	INDICATE "SELF-PERFORMED" OR NAME SUBCONTRACTOR	QUANTITY	UNIT OF MEASURE	UNIT COST	TOTAL COST
1	Install sewer connection per "Sewer Main Improvement Plan" drawings.		1	Lump sum	N/A	$95,000.00
2	Remove sewer connection to existing septic tank.		1	Lump sum	N/A	$15,500.00

TOTAL PROJECT CONSTRUCTION COSTS	$110,500.00
ALTERNATES Performance & Payment Bond Percentage (%)	2.50%
Performance & Payment Bond Cost ($$) OF **ALTERNATES**	$2,762.50
Contingency 10%	$11,050.00
TOTAL ALTERNATES COSTS W/ PERFORMANCE & PAYMENT BONDS AND CONTINGENCY	$124,312.50

ALLOWANCES

ITEM NUMBER	ITEM DESCRIPTION	INDICATE "SELF-PERFORMED" OR NAME SUBCONTRACTOR	QUANTITY	UNIT OF MEASURE	UNIT COST	TOTAL COST
1	Subgrade compaction testing		1	EA	$0.00	$7,000.00
2	Special Inspections as required by City of Rolling Hills.		1	EA	$0.00	$10,000.00
~~3~~	~~Additional Architectural Services~~		~~1~~	~~Lump sum~~	~~N/A~~	~~$0.00~~
4	Existing Landscape repairs and replacements.		1	Lump sum	N/A	$50,000.00

TOTAL PROJECT CONSTRUCTION COSTS	$67,000.00
ALLOWANCES Performance & Payment Bond Percentage (%)	2.50%
Performance & Payment Bond Cost ($$) OF **ALLOWANCES**	$1,675.00
Contingency 10%	$6,700.00
TOTAL ALLOWANCES COSTS W/ PERFORMANCE & PAYMENT BONDS AND CONTINGENCY	$75,375.00

GRAND TOTAL

GRAND TOTAL PROJECT CONSTRUCTION COSTS W/ ALTERNATES, ALLOWANCES AND PERFORMANCE & PAYMENT BONDS WITH CONTINGENCY	$998,100.00

US Builders and Consultants Inc.

126 Desert Lotus

Irvine, CA 92618

RECEIVED

FEB 18 2025

City of Rolling Hills

by _____

City of Rolling Hills

2 Portuguese Bend Road,
Rolling Hills, CA 90274

TENNIS COURT ADA IMPROVEMENT PROJECT
JOB NO. 2025-01

February 18, 2025 at 02:00 PM

SEALED BID, DO NOT OPEN

PROPOSAL

Date: 02/18, 2025

Tennis Court ADA Improvement Project, Job No. 2025-01

TO THE CITY OF ROLLING HILLS, ROLLING HILLS, CALIFORNIA

Pursuant to the foregoing Notice to Contractors, the undersigned bidder herewith submits a proposal on the bidding form or forms attached hereto and made a part hereof, and binds himself on award by the City of Rolling Hills under this proposal to execute in accordance with such award a contract, of which this proposal and the said Notice to Contractors, Instructions to Bidders, Specifications, and drawings shall be a part, and to furnish the bond or bonds required by the Specifications. The attached Notice to Contractors, Instructions to Bidders, Specifications, and drawings are made a part of this proposal and all provisions thereof are hereby accepted.

The bidder acknowledges that the Instructions to Bidders provides, among other things, that the Contract shall be terminated and the bid bond forfeited if the contractor fails to provide the applicable insurance certificates and bonds within the time set forth in Section 21 of the Instructions to Bidders.

The bidder further agrees that, in case of his/her default in executing the required contract and the required bond or bonds, or furnishing the required insurance, the money payable under the bid bond accompanying his proposal shall be applied by the City towards payment of the damage to the City on account of such default, as provided in the specifications.

(CORPORATE SEAL OR NOTARIAL ACKNOWLEDGEMENTS OF SIGNATURE - IF PARTNERSHIP OR PROPRIETORSHIP)

Firm US Builders and Consultants Inc.

By Tamer Awad

(Signature) 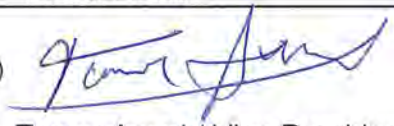

Name/Title Tamer Awad / Vice President

Address 126 Desert Lotus, Irvine, CA

Zip 92618

Phone (714) 317-8402

E-mail: cityclerk@cityofrh.net

✓

Nature of firm (corporation, partnership, etc.) and names of individual members of the firm, or names and titles of officers of the corporation.

US Builders and Consultants Inc

Mohamed Almallah, President

Tamer Awad, Vice President

Corporation organized under the laws of the State of: California

BIDDERS PROPOSAL

Name of Bidder: US Builders and Consultants Inc. The undersigned, having examined the proposed Contract Documents titled:

Tennis Court ADA Improvement Project, Job No. 2025-01

and having visited the site and examined the conditions affecting the work, hereby proposes and agrees to furnish all labor, materials, equipment, and appliances, and to perform operations necessary to complete the work as required by said proposed Contract Documents as itemized below:

PROJECT BID SCHEDULE - SEE AND COMPLETE SEPARATE EXCEL FILE

BASE BID:

Two million, six hundred forty eight thousand, one hundred and thirty eight dollars ($ 2,648,030)

Base Bid Total Sum in Words Base Bid — Total Sum in Figures

The City reserves the right to request the unit price of some or all contract items.

US Builders and Consultants Inc.	10%
Name of Bidder	Amount of Certified Check/Bidder's Bond
126 Desert Lotus, Irvine, CA 92618	The Gray Casualty & Surety Company
Address	Name of Bonding Company

The price shall include all State, Federal, and other taxes applicable to the project, and shall be a firm offer for a period of Ninety (90) days after the date of bid opening.

Bid Items:

1. General Conditions
   All general conditions applicable to the scope of work, mitigation efforts for dust control, daily and final cleaning, and all permit coordination with the City of Rolling Hills. This also includes all project management items including required OAC meetings, submitting of all RFIs and material submittals.

   Demolition/Removals: General Description of work, not limited to the following; demolition and removal of all existing improvements, utilities, structures within the limits of work shown on plans GR2301100001 necessary to construct the improvements as shown on all plans associated with this project. City requires construction and demolition (C&D) permit for hauling and recycling from third parties and has recycling requirements. The City's franchise waste hauler, Republic Services, will take care of the C&D if they are used.

2. Grading
   Preparation of the soil for the new construction and putback. This defines all grading (rough and fine) with appropriate fill amounts including drainage and erosion controls as noted on the Grading plans.

3. Paving
   General paving at the parking area to align with existing city street. This includes paint striping for the ADA street improvements as well as new crosswalks per the Architectural plans. Contractors must provide all mix design and batch testing for the asphalt to ensure compliance with the specifications.

4. ADA Improvements
   All work improvements to comply with the Americans with Disabilities Act shown on the Grading, Architectural and Landscape plans, not limited to the following:
   a. All work required to install the ADA improvements as shown on approved Grading and Drainage Plans.
   b. Site ADA details on the approved Architectural Plans including new ADA parking Stall signage, striping, and wheel stop per details 17, 18, 8 on Sheet A-602; Stair and Ramp handrails, Stair Nosing, and Stair Warning Striping/Nosing per details 3, 8, 5, and 10 on Sheet A-603.
   c. ~~New restroom fixtures as noted on Sheet A-102.~~
   d. The lighting as shown on the Landscape Improvement Plans, Sheets LL-1, LL-2, and LL-3

5. Civil Site Improvements
   All work required to install the improvements as shown on approved Retaining Wall Plans and the Landscape Improvement Plans LI-1. The retaining wall scope includes two types of retaining walls: ramp retaining walls and planter retaining walls. The landscape plans show new "sleeves" for the new plantings and for future installation of a landscape irrigation system beneath the Tennis Court ADA hardscape improvements.

6. Structural
   All work required for installation of foundation for the future Cabana Building. Construction of the foundation for the future Cabana in accordance with the approved structural plans and

necessary plumbing and electrical embed connections per both Electrical and Plumbing plans.

7. Plumbing
   Installation of all Plumbing scope noted in the Plumbing drawings including all new utility stubs, all rough plumbing water and wastewater piping beneath Cabana Foundation and Slab as shown on Plumbing Plans P-3, P-4, and P-4.1. Install 1" water service from POC to Cabana as shown on Plumbing Plan P-2. Install 3" wastewater line from Cabana to existing Septic Tank as shown on Plumbing Plan P-2.

8. Electrical
   Installation of all Electrical scope noted in the Electrical drawings including new conduit from power source ("MS") to future Cabana Electrical Panel ("A") as shown on Electrical Plans E-2 and E-4.

9. Alternates
   The City would like to have Bid numbers for possible additional Sewer scope noted on sheet C-3 of the Portuguese Bend/Rolling Hills Road Sewer Main Improvement Plans. This includes removing the current existing connection to a septic tank and replacing with a new 4" connection to the City's municipal sewer system.

10. Allowances
    Contractors will supply additional bid numbers for additional subgrade compaction testing and any special inspections required by the City of Rolling Hills. Additional allowances for additional Architectural services related to the ADA improvements and any existing landscape repairs required during the grading and backfill site construction.

Bidders Qualifications and References

Name of Bidder US Builders and Consultants Inc.

THE BIDDER SHALL COMPLETE THE FOLLOWING STATEMENTS:

1. The bidder has been engaged in the contracting business, under the present business name, for 04 years.

2. Experience in work of a nature similar to that covered in the Proposal extends over a period of 04 years.

3. The bidder, as a contractor, has never failed to satisfactorily complete a contract awarded to him, except as follows (Name any and all exceptions and reasons therefore):

N/A

4. Contractor's License Number, State of California 1067739 Class A & B

5. Contractor's License Expiration Date 12/31/2026

6. Department of Industrial Relations (DIR) Registration Number PW-LR-1000756487

7. The following contracts have been satisfactorily completed in the last three years for the persons, firm, or authority indicated; and to whom reference is made. (Name five contracts and include the total contract amount as well as the original bid amount for each contract.)

	YEAR	TYPE OF WORK	FINAL CONTRACT AMOUNT	ORIGINAL CONTRACT AMOUNT	LOCATION AND FOR WHOM PERFORMED
A	2025	Interior Renovations, Drywall, Electrical & Plumbing	$1,011,932	$977,812	City of Monterey Park Monterey Park
B	2024	New Bin Storage Structures, Paving, Concrete	$528,000	$528,000	City of Orange Chapman Ave. Orange
C	2024	Demolition, Site Paving, Grading and Earthwork	$229,900	$229,900	Colton Unified School Colton
D	2023	ADA Restroom Renovations	$819,983	$355,900	City of San Bernardino San Bernardino
E	2023	Flooring, Drywall, Electrical, Concrete	$113,400	$158,154	City of Laguna Woods Laguna Woods

8. The following persons may be contacted for information concerning the contract work listed above (list a reference for each contract named).

	NAME	TITLE	ADDRESS	TELEPHONE
A	Anthony Bendezu	Civil Engineering Associate	320 West Newmark Ave., Monterey Park, CA 91754	(626) 307-1283
B	Tuan Cao	Senior Civil Engineer	300 E. Chapman Ave. Orange, CA 92866	(714) 288-2492
C	Diane Mendez	Project Manager	1212 Valencia Drive, Colton, CA 92324	(909) 580-6586
D	Ziad Mazboudi	Project Manager	201 North E Street, 2nd Floor San Bernardino, CA 92401	(626) 532-2018
E	April Baumgarten	Maintenance Programs Analyst	24264 El Toro Road Laguna Woods, CA 92637	(949)-639-0568

9. Reference is hereby made to the following bank or banks as to the financial responsibility of the bidder:

Bank JPMorgan Chase Bank Branch Irvine

Bank _____ Branch _____

Bank _____ Branch _____

10. Reference is hereby made to the following surety company or companies as to the financial responsibility and general reliability of the bidder:

Surety Company The Gray Casualty & Surety Company Phone (714)-824-8364

Surety Company _____ Phone _____

11. Following is a list of plant and equipment that is owned by the bidder and is definitely available for use on the proposed project:

QUANTITY	NAME, TYPE, AND CAPACITY	CONDITION	LOCATION
	NA		

(Attach additional sheets as necessary)

12. All of the above statements as to experience, financial qualifications, and available plant and equipment are submitted in conjunction with the proposal, as a part thereof, and the truthfulness and accuracy of the information is guaranteed by the bidder.

Signature of Bidder _____

Name/Title: Tamer Awad/Vice President

DESIGNATION OF SUBCONTRACTORS

NAME OF BIDDER US Builders and Consultants Inc.

In compliance with the provisions of the Subletting and Subcontracting Fair Practices Act (Division 2, Part 1), Chapter 4 of the Public Contract Code of the State of California, and any amendments thereof), each bidder shall set forth below:

1. The name and location of the place of business of each subcontractor who will perform work or labor or render service to the Contractor in or about the construction of the work or improvement, or a subcontractor licensed in the State of California who, under subcontract to the Contractor, specially fabricates and installs a portion of the work or improvement according to detailed drawings contained in the plans and specifications, in an amount in excess of one-half of one percent of the Contractor's total bid.

2. The portion and estimated dollar amount of the work which will be done by each subcontractor. The Contractor shall list only one subcontractor for each portion as is defined by the Contractor in his bid.

Please type or legibly print (attach additional sheets as necessary).

For Base Bid numbers

Name of Subcontractor	City	Portion	Estimated $ Amount
Name: Shelby Electric Incorporated License No. 340393 License Class C-10 DIR Registration No. 1000006825	Lake Elsinore	Electrical	$187,680
Name: LP Paving and Grading Inc. License No. 1089202 License Class C-12 DIR Registration No. 1001031634	San Bernardino	Asphalt Concrete	$5,131
Name: Interstate Striping, Inc. License No.1087140 License Class C-32 DIR Registration No.1000866044	Fontana	Striping	$5,053
Name: License No. License Class DIR Registration No.			
Name: License No. License Class DIR Registration No.			
Name: License No. License Class DIR Registration No.			

Circumvention by the Contractor of the requirement under Section 4104 of the Public Contract Code to list his subcontractors, by the device of listing another contractor who will in turn sublet portions constituting the majority of the work covered by this contract, shall be considered a violation of Division 2, Part 1, Chapter 4 of the Public Contract Code and shall subject the Contractor to the penalties set forth in Sections 4110 and 4111 of the Public Contract Code.

If the Contractor fails to specify a subcontractor or if the Contractor specifies more than one subcontractor for the same portion for work to be performed under the contract in excess of one-half of one percent of the Contractor's total bid, he agrees that he/she is fully qualified to perform that portion himself/herself, and that he/she shall perform that portion himself/herself. If after award of contract, the Contractor subcontracts, except as provided for in Sections 4107 or 4109 of the Public Contract Code, any such portion of the work, the Contractor shall be subject to the penalties named in Section 4111 of the Public Contract Code.

The Contractor shall not:

A. Substitute any person as subcontractor in place of the subcontractor listed in the original bid, except that the City may, except as otherwise provided in Section 4107.5 of the Public Contract Code, consent to the substitution of another person as subcontractor:

    1. When the subcontractor listed in the bid, after having had a reasonable opportunity to do so, fails or refuses to execute a written contract, based upon the general terms, conditions, plans and specifications for the project involved or the terms of such contractor's written bid, is presented to him/her by the Contractor, or
    2. When the listed subcontractor becomes bankrupt or insolvent, or
    3. When the listed subcontractor fails or refuses to perform his/her subcontract, or
    4. When the listed subcontractor fails or refuses to meet the bond requirements of the Contractor as set forth in Section 43108 of the Public Contract Code, or
    5. When the Contractor demonstrates to the City, subject to the further provisions set forth in Section 4107.5 of the Public Contract Code, that the name of the subcontractor was listed as the result of an inadvertent clerical error, or
    6. When the listed subcontractor is not licensed pursuant to the Contractors License Law, or
    7. When the City determines that the work performed by the listed subcontractor is substantially unsatisfactory and not in substantial accordance with the plans and specifications, or that the subcontractor is substantially delaying or disrupting the progress of the work.

B. Permit any subcontract to be voluntarily assigned or transferred or allow it to be performed by anyone other than the original subcontractor listed in the original bid, without the consent of the City.
C. Other than in the performance of "change orders" causing changes or deviations from the original contract, sublet or subcontract any portion of the work in excess of one-half

of one percent of the Contractor's total bid as to which his original bid did not designate a subcontractor.

Prior to approval of a Contractor's request for a subcontractor substitution, the City will give notice in writing to the listed subcontractor of the Contractor's request to substitute and of the reason for the request. The notice will be served by certified or registered mail to the last known address of the subcontractor. The listed subcontractor who has been so notified shall have five working days within which to transmit to the City written objections to the substitution. Failure to file these written objections shall constitute the listed subcontractor's consent to the substitution.

If written objections are filed, the City will give notice in writing of at least five working days to the listed subcontractor of a hearing by the City on the Contractor's request for substitution

The Contractor, as a condition to asserting a claim of inadvertent clerical error in the listing of a subcontractor, shall within two working days after the time of the bid opening by the City, give written notice to the City and copies of such notice to both the subcontractor he claims to have listed in error and the intended subcontractor who had bid to the Contractor prior to the bid opening.

Subletting or subcontracting of any portion of the work in excess of one-half of one percent of the Contractor's total bid as to which no subcontractor was designated in the original bid shall only be permitted in cases of public emergency or necessity, and then only after a finding reduced to writing as a public record of the City setting forth the facts constituting the emergency or necessity.

If the Contractor violates any of the provisions of Division 2, Part 1, Chapter 4 of the Public Contract Code or any amendments thereof, the Contractor violates his contract and the City may exercise the option, in its own discretion, of (1) canceling its contract, or (2) assessing the Contractor a penalty in an amount not more than ten percent of the amount of the subcontract involved, and this penalty shall be deposited in the fund out of which the prime contract is awarded. In any proceedings under Section 4110 of the Public Contract Code the Contractor shall be entitled to a public hearing and to five days' notice of the time and place thereof.

Contractor's Affidavit of Non-collusion

STATE OF CALIFORNIA)
) SS
COUNTY OF LOS ANGELES)

Tamer Awad being first duly sworn, deposes and says:

1. That he/she is the Vice President (Title of office if a corporation: "sole owner," "Partner," or other proper title) of US Builders and Consultants Inc., hereinafter called "Contractor", who has submitted to the City of Rolling Hills a proposal for the construction of **Tennis Court ADA Improvement Project, Job No. 2025-01**;

2. That said proposal is genuine; that the same is not sham; that all statements of fact therein are true;

3. That such proposal was not made in the interest or behalf of any person, partnership, company, association, organization, or corporation not named or disclosed.

4. That the Contractor did not, directly or indirectly induce, solicit or agree with anyone else to submit a false or sham bid, to refrain from bidding, or withdraw his/her bid, to raise or fix the bid price of the Contractor price or of anyone else, or to raise or fix any overhead profit, or cost element of the Contractor's price or the price of anyone else; and did not attempt to induce action prejudicial to the interest of the City of Rolling Hills, or of any other bidder, or anyone else interested in the proposed contract;

5. That the Contractor has not in any manner sought by collusion to secure for himself/herself an advantage over any other bidders or induce action prejudicial to the interests of the City of Rolling Hills or of any other bidder, or anyone else interested in the proposed contract;

6. That the Contractor has not accepted any bid from any subcontractor or material man through any bid depository, the bylaws, rules or regulations, of which prohibit or prevent the Contractor from considering any bid from any subcontractor or material man, which is not processed through said bid depository, or which prevent any subcontractor or material man from bidding to any Contractor who does not use facilities of or accept bids from or through such bid depository;

7. That the Contractor has not been debarred from participation in any state or federal public works project.

8. That the Contractor did not, directly or indirectly, submit the Contractor's bid price or any breakdown thereof, or the contents thereof, or divulge information or data relative thereto

to any corporation, partnership, company, association, organization, bid depository, or to any member or agent thereof, or to any individual or group of individuals, except to the City of Rolling Hills, or to any person or persons who have partnership or other financial interest with said Contractor in his business.

Dated this 18th day of February 2025

US Builders and Consultants Inc. Contractor

_____ Signature

Tamer Awad/Vice President Name/Title



SUBSCRIBED AND SWORN TO BEFORE ME

ON _____

02/18/25

Notary Public in and for the County of Los Angeles, State of California

Place Notary Seal Above

Pre-Bid Site Inspection Certification

Tennis Court ADA Improvement Project, Job No. 2025-01

The bidder hereby certifies that he or she and his or her Subcontractors have inspected the work site of the above project, and have fully acquainted themselves with all conditions and matters which might in any way affect the work, time of completion or the cost thereof. The bidder also certifies he or she has observed the designated Contractor Work Areas and access routes.

BIDDER:

Company Name: US Builders and Consultants Inc.

Signature: _____

Name/Title: Tamer Awad/Vice President

Date: 02/18/2025

BIDDER'S INSPECTORS:

Name: Mohamed Almallah

Title: President

Date of Inspection: 2/2/2025

Name: _____

Title: _____

Date of Inspection: _____

Workers' Compensation Certificate

Tennis Court ADA Improvement Project, Job No. 2025-01

The bidder hereby certifies that he or she is aware of the provisions of Section 3700 of the Labor Code which requires every employer to be insured against liability for workers' compensation or to undertake self-insurance in accordance with the provisions of that code, and will comply with such provisions before commencing the performance of any work on the above project.

BIDDER:

Company Name: US Builders and Consultants Inc

Signature: 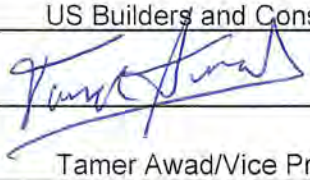

Name/Title: Tamer Awad/Vice President

Date: 02/18/2025

BID BOND

Bond No. : N/A - Bid Bond **KNOW ALL PERSONS BY THESE PRESENTS** that:

WHEREAS the City of Rolling Hills, California ("City"), has issued an invitation for bids for the work described as follows:

Tennis Court ADA Improvement Project, Job No. 2025-01

WHEREAS U.S. Builders & Consultants, Inc. - 42 Sorrento, Irvine, CA 92614

(Name and address of bidder)

("Principal"), desires to submit a bid to City or the work.

WHEREAS, bidders are required, under the terms of the Section 20170 of the California Public Contract Code, to furnish a form of bidder's security with their bid.

NOW, THEREFORE, we, the undersigned Principal, and

The Gray Casualty & Surety Company - P.O. Box 6202, Metairie, LA 70009 - 6202

(Name and address of Surety)

("Surety") a duly admitted surety insurer under the laws of the State of California, as Surety, are held and firmly bound unto the City in the penal sum of Ten Percent of the Total Amount Bid (10%) Dollars ($ ----- 10% -----), being not less than ten percent (10%) of the total bid price, including alternate, in lawful money of the United States of America, for the payment of which sum well and truly to be made, we bind ourselves, our heirs, executors, administrators, successors, and assigns, jointly and severally, firmly by these presents.

THE CONDITION OF THIS OBLIGATION IS SUCH THAT, if the hereby bound Principal is awarded a contract for the work by the City and, within the time and in the manner required by the bidding specifications, enters into the written form of contract included with bidding specifications, furnishes the required bonds, one to guarantee faithful performance and the other to guarantee payment for labor and materials, and furnishes the required insurance coverage, then this obligation shall become null and void; otherwise, it shall be and remain in full force and effect.

In case suit is brought upon this bond, Surety further agrees to pay all court costs incurred by the City in the suit and reasonable attorneys' fees in an amount fixed by the court.

IN WITNESS WHEREOF, this instrument has been duly executed by Principal and Surety, on the date set forth below, the name of each corporate party being hereto affixed and these presents duly signed by its undersigned representative(s) pursuant to authority of its governing body.

Dated: February 14th, 2025

"Principal"	"Surety"
Company Name:	Company Name
U.S. Builders & Consultants, Inc.	The Gray Casualty & Surety Company
42 Sorrento, Irvine, CA 92614	P.O. Box 6202, Metairie, LA 70009 - 6202
By:	By:
Name: Tamer Acrad	Name: Zyanya Hernandez
Its: Vice President	Its: Attorney-in-Fact
By:	By:
Name:	Name:
Its:	Its:
(Seal)	(Seal)

THE GRAY CASUALTY & SURETY COMPANY SEAL

Note: This bond must be dated, all signatures must be notarized, and evidence of the authority of any person signing as attorney-in-fact must be attached.

CALIFORNIA ACKNOWLEDGMENT CIVIL CODE § 1189

A notary public or other officer completing this certificate verifies only the identity of the individual who signed the document to which this certificate is attached, and not the truthfulness, accuracy, or validity of that document.

State of California
County of Orange }

On _____ before me, Terry Cormier, Notary Public,
Date *Here Insert Name and Title of the Officer*

personally appeared Tamer Awad
Name(s) of Signer(s)

_____,

who proved to me on the basis of satisfactory evidence to be the person(s) whose name(s) is/are subscribed to the within instrument and acknowledged to me that he/she/they executed the same in his/her/their authorized capacity(ies), and that by his/her/their signature(s) on the instrument the person(s), or the entity upon behalf of which the person(s) acted, executed the instrument.

TERRY CORMIER
COMM. #2456406
Notary Public · California
Orange County
My Comm. Expires Aug. 1, 2027
NRO1 NRO1

I certify under PENALTY OF PERJURY under the laws of the State of California that the foregoing paragraph is true and correct.

WITNESS my hand and official seal.

Signature _____
Signature of Notary Public

Place Notary Seal and/or Stamp Above

OPTIONAL

Completing this information can deter alteration of the document or fraudulent reattachment of this form to an unintended document.

Description of Attached Document

Title or Type of Document: _____

Document Date: _____ Number of Pages: _____

Signer(s) Other Than Named Above: _____

Capacity(ies) Claimed by Signer(s)

Signer's Name: _____	Signer's Name: _____
☐ Corporate Officer – Title(s): _____	☐ Corporate Officer – Title(s): _____
☐ Partner – ☐ Limited ☐ General	☐ Partner – ☐ Limited ☐ General
☐ Individual ☐ Attorney in Fact	☐ Individual ☐ Attorney in Fact
☐ Trustee ☐ Guardian or Conservator	☐ Trustee ☐ Guardian or Conservator
☐ Other: _____	☐ Other: _____
Signer is Representing: _____	Signer is Representing: _____

©2019 National Notary Association

CALIFORNIA ALL-PURPOSE ACKNOWLEDGEMENT

A Notary Public or other officer completing this certificate verifies only the identity of the individual who signed the document to which this certificate is attached, and not the truthfulness, accuracy, or validity of that document.

State of California
County of Orange }

On FEB 14 2025, before me, Christina Rogers, Notary Public,

personally appeared Zyanya Hernandez

who proved to me on the basis of satisfactory evidence to be the person(s) whose name(s) is/are subscribed to the within instrument and acknowledged to me that he/she/they executed the same in his/her/their authorized capacity(ies), and that by his/her/their signature(s) on the instrument the person(s), or the entity upon behalf of which the person(s) acted, executed the instrument.

I certify under PENALTY OF PERJURY under the laws of State of California that the foregoing paragraph is true and correct.

CHRISTINA ROGERS
Notary Public - California
Orange County
Commission # 2463205
My Comm. Expires Sep 14, 2027

PLACE NOTARY SEAL ABOVE

WITNESS my hand and official seal.

SIGNATURE Christina Rogers

Though the information below is not required by law, it may prove valuable to persons relying on the document and could prevent fraudulent removal and reattachment of this form to another document.

Description of attached document

Title or type of document: _____

_____

_____

Document Date: _____ Number of Pages: _____

Signer(s) Other than Named Above: _____

THE GRAY INSURANCE COMPANY
THE GRAY CASUALTY & SURETY COMPANY

GENERAL POWER OF ATTORNEY

Bond Number: N/A - Bid Bond **Principal:** U.S. Builders & Consultants, Inc.

Project: Tennis Court ADA Improvement Project, Job No. 2025-01

KNOW ALL BY THESE PRESENTS, THAT The Gray Insurance Company and The Gray Casualty & Surety Company, corporations duly organized and existing under the laws of Louisiana, and having their principal offices in Metairie, Louisiana, do hereby make, constitute, and appoint: **Melissa Lopez, Vanessa Ramirez, Jonathan Batin, Zyanya Hernandez, Jennifer Anaya, Joaquin Perez, Albert Melendez, Chrisina Rogers, Frederic M. Archerd, Jr., Mary Martha Langley, Martha Barreras, Yu Cheng Chiang, and Erik Johansson of Tustin, California jointly and severally** on behalf of each of the Companies named above its true and lawful Attorney(s)-in-Fact, to make, execute, seal and deliver, for and on its behalf and as its deed, bonds, or other writings obligatory in the nature of a bond, as surety, contracts of suretyship as are or may be required or permitted by law, regulation, contract or otherwise, provided that no bond or undertaking or contract of suretyship executed under this authority shall exceed the amount of
$25,000,000.00.

This Power of Attorney is granted and is signed by facsimile under and by the authority of the following Resolutions adopted by the Boards of Directors of both The Gray Insurance Company and The Gray Casualty & Surety Company at meetings duly called and held on the 26th day of June, 2003.

"RESOLVED, that the President, Executive Vice President, any Vice President, or the Secretary be and each or any of them hereby is authorized to execute a power of Attorney qualifying the attorney named in the given Power of Attorney to execute on behalf of the Company bonds, undertakings, and all contracts of surety, and that each or any of them is hereby authorized to attest to the execution of such Power of Attorney, and to attach the seal of the Company; and it is

FURTHER RESOLVED, that the signature of such officers and the seal of the Company may be affixed to any such Power of Attorney or to any certificate relating thereto by facsimile, and any such Power of Attorney or certificate bearing such facsimile signature or facsimile seal shall be binding upon the Company now and in the future when so affixed with regard to any bond, undertaking or contract of surety to which it is attached.

IN WITNESS WHEREOF, The Gray Insurance Company and The Gray Casualty & Surety Company have caused their official seals to be hereinto affixed, and these presents to be signed by their authorized officers this 4th day of November, 2022.

THE GRAY INSURANCE COMPANY SEAL

By: Michael T. Gray
Michael T. Gray
President
The Gray Insurance Company

Cullen S. Piske
President
The Gray Casualty & Surety Company

THE GRAY CASUALTY & SURETY COMPANY SEAL

State of Louisiana
ss:
Parish of Jefferson

On this 4th day of November, 2022, before me, a Notary Public, personally appeared Michael T. Gray, President of The Gray Insurance Company, and Cullen S. Piske, President of The Gray Casualty & Surety Company, personally known to me, being duly sworn, acknowledged that they signed the above Power of Attorney and affixed the seals of the companies as officers of, and acknowledged said instrument to be the voluntary act and deed, of their companies.

Leigh Anne Henican
Notary Public
Notary ID No. 92653
Orleans Parish, Louisiana

Leigh Anne Henican
Notary Public, Parish of Orleans State of Louisiana
My Commission is for Life

I, Mark S. Manguno, Secretary of The Gray Insurance Company, do hereby certify that the above and forgoing is a true and correct copy of a Power of Attorney given by the companies, which is still in full force and effect. IN WITNESS WHEREOF, I have set my hand and affixed the seals of the Company this 14th day of February , 2025 .

I, Leigh Anne Henican, Secretary of The Gray Casualty & Surety Company , do hereby certify that the above and forgoing is a true and correct copy of a Power of Attorney given by the companies, which is still in full force and effect. IN WITNESS WHEREOF, I have set my hand and affixed the seals of the Company this 14th day of February , 2025 .

THE GRAY INSURANCE COMPANY SEAL

THE GRAY CASUALTY & SURETY COMPANY SEAL

THE GRAY SURETY

The Gray Insurance Company
The Gray Casualty & Surety Company

Telephone: 504-780-7440
info@graysurety.com

P.O. Box 6202
Metairie, LA 70009

Surety Bond Seal Addendum

In response to the logistical issues associated with the Covid-19 pandemic, The Gray Insurance Company and The Gray Casualty & Surety Company, (individually, the "Company" and collectively, the "Companies") have authorized the Attorneys-in-Fact named on the Power of Attorney attached hereto and incorporated herein by reference to affix the Companies' seal to any bond executed on behalf of the Companies by any such Attorney-in-Fact by attaching this Addendum to said bond.

To the extent this Addendum is attached to a bond that is executed on behalf of any of the Companies by such Attorney-in-Fact, each Company hereby agrees that the seal below shall be deemed affixed to said bond to the same extent as if its raised corporate seal was physically affixed to the face of the bond.

Dated this 1st Day of January 2021

THE GRAY INSURANCE COMPANY SEAL

THE GRAY CASUALTY & SURETY COMPANY SEAL

By: _____

Cullen S. Piske
President, The Gray Casualty & Surety Company
Attorney-in-Fact, The Gray Insurance Company

DETAILED BID BREAKDOWN FORM

Owner: City of Rolling Hills
Project Type: ADA City Project
Contractor: _____

Bergeman GROUP
www.bergemangroup.com

ITEM #	ITEM DESCRIPTION	INDICATE "SELF-PERFORMED" OR NAME SUBCONTRACTOR	QTY.	UNIT OF MEASURE	UNIT COST	TOTAL COST	Fidelity TOTAL COST	RAMSA TOTAL COST	US Builders TOTAL COST
GENERAL CONDITIONS									
1	Mobilization & Demobilization (Onsite storage, Portable contractor restrooms, staging area, etc.)		1	Lump sum	N/A	$0.00	$18,000.00	$17,000.00	$44,719.00
2	Safety, Hoisting, Materials Handling, Traffic Control & Debris Disposal		1	Lump sum	N/A	$0.00	$9,840.00	$25,000.00	$6,942.00
3	Exterior Dust Control, Temporary Dust Fence & Protection of Non-Work Areas		1	Lump sum	N/A	$0.00	$10,800.00	$8,000.00	$2,254.00
4	Daily Cleaning & Final Cleaning		1	Lump sum	N/A	$0.00	$7,200.00	$9,000.00	$11,180.00
5	Building Permit Filing and Coordination By Contractor - Complete Contractor Statement and pick up Permit (fees related to permitting to be reimbursed to Contractor by Owner with no markup to Contractor)		1	Lump sum	N/A	$0.00	$5,400.00	$500.00	$3,967.00
6	Construction Administration (OAC Meetings, Substantial Completion, and Final Completion Meetings, Submittals, RFIs, etc.)		1	Lump sum	N/A	$0.00	$2,400.00	$6,000.00	$4,778.00
7	Demolition/Removals: all existing improvements, utilities, structures within the limits of work shown on plans GR2301100001 necessary to construct the improvements as shown on all plans associated with this project. City requires construction and demolition (C&D) permit for hauling and recycling from third parties and has recycling requirements. The City's franchise waste hauler, Republic Services, will take care of the C&D if they are used.		1	Lump sum	N/A	$0.00	$52,800.00	$52,000.00	$58,056.00
					TOTAL: GENERAL CONDITIONS	**$0.00**	**$106,440.00**	**$117,500.00**	**$131,896.00**

GRADING		*Quantities provided are estimated and for bidding purposes only							
ITEM #	**ITEM DESCRIPTION**	**INDICATE "SELF-PERFORMED" OR NAME SUBCONTRACTOR**	**QTY.**	**UNIT OF MEASURE**	**UNIT COST**	**TOTAL COST**	**TOTAL COST**	**TOTAL COST**	**TOTAL COST**
1	Rough grading needed per Grading plans.			SY	$0.00	$0.00	$7,200.00	$40,000.00	$53,786.00
2	Install site drainage and erosion controls.		1	Lump sum	N/A	$0.00	$10,800.00	$21,000.00	$235,299.00
3	Fine grading prior to putback commencement.			SY	$0.00	$0.00	$4,800.00	$25,000.00	$5,862.00
					TOTAL: GRADING	**$0.00**	**$22,800.00**	**$86,000.00**	**$294,947.00**

PAVING		*Quantities provided are estimated and for bidding purposes only							
ITEM #	**ITEM DESCRIPTION**	**INDICATE "SELF-PERFORMED" OR NAME SUBCONTRACTOR**	**QTY.**	**UNIT OF MEASURE**	**UNIT COST**	**TOTAL COST**	**TOTAL COST**	**TOTAL COST**	**TOTAL COST**
1	Install new pavement at new ADA Van accessible parking space per Architectural plans.			SY	$0.00	$0.00	$4,680.00	$11,000.00	$5,131.00
2	Asphalt & Concrete Mix Designs & Batch Testing - For each type of asphalt and concrete to be used on the project, provide proposed mix designs and produce test batches showing compliance with City of Rolling Hills specifications.		1	Lump sum	N/A	$0.00	$24,480.00	$16,000.00	$3,787.00
3	Paint cross wallks per Architectural plans.			LF	$0.00	$0.00	$2,040.00	$3,000.00	$2,200.00
					TOTAL: PAVING	**$0.00**	**$31,200.00**	**$30,000.00**	**$11,118.00**

DETAILED BID BREAKDOWN FORM

Owner: City of Rolling Hills
Project Type: ADA City Project
Contractor: _____

www.bergemangroup.com

ITEM #	ITEM DESCRIPTION	INDICATE "SELF-PERFORMED" OR NAME SUBCONTRACTOR	QTY.	UNIT OF MEASURE	UNIT COST	TOTAL COST	Fidelity TOTAL COST	RAMSA TOTAL COST	US Builders TOTAL COST
ADA IMPROVEMENTS			***Quantities provided are estimated and for bidding purposes only**						
ITEM #	**ITEM DESCRIPTION**	**INDICATE "SELF-PERFORMED" OR NAME SUBCONTRACTOR**	**QTY.**	**UNIT OF MEASURE**	**UNIT COST**	**TOTAL COST**	**TOTAL COST**	**TOTAL COST**	**TOTAL COST**
1	Install new ADA Van Parking space per plans plans. Striping, signage and painted ISA on pavement included. Refer to detail #17 and 18 on sheet A-602 of the Architectural plans.		1	Lump sum	N/A	$0.00	$5,040.00	$11,000.00	$2,640.00
2	Install new wheel stop at new ADA Van parking space per detail #8 on sheet A-602 of the Architectural plans..			EA	$0.00	$0.00	$360.00	$1,500.00	$213.00
3	Install new truncated domes at all ramp landings per detail #15 on sheet A-602 of the Architectural plans.			EA	$0.00	$0.00	$3,000.00	$9,500.00	$1,671.00
4	Install new ramps and pathways, concrete curbs, retaining wall, and pavers per plans specs.			LF	$0.00	$0.00	$44,400.00	$65,000.00	$968,763.00
5	Install new hand rails, nosing and warning strips per details #3, 5, 8 and 15 on sheet A-603 of the Architectural plans.			LF	$0.00	$0.00	$43,000.00	$55,000.00	$27,959.00
6	Retaining Wall: ADA ramp (From Parking Area)			LF	$0.00	$0.00	$28,800.00	$30,000.00	$125,945.00
7	Retaining Wall: ADA ramp (Tennis Court Viewing Area)			LF	$0.00	$0.00	$25,200.00	$35,000.00	$122,652.00
8	Install ADA Lighting			Lump Sum	$0.00	$0.00	$3,840.00	$6,000.00	$39,310.00
					TOTAL: ADA SITE IMPROVEMENTS	**$0.00**	**$153,640.00**	**$213,000.00**	**$1,289,153.00**

CIVIL SITE IMPROVEMENTS			***Quantities provided are estimated and for bidding purposes only**						
ITEM NUMBER	**ITEM DESCRIPTION**	**INDICATE "SELF-PERFORMED" OR NAME SUBCONTRACTOR**	**QTY.**	**UNIT OF MEASURE**	**UNIT COST**	**TOTAL COST**	**TOTAL COST**	**TOTAL COST**	**TOTAL COST**
1	Retaining Wall: Planters			LF	$0.00	$0.00	$24,000.00	$35,000.00	$49,360.00
2	Landscape: Irrigation line sleeves			Lump sum	N/A	$0.00	$2,160.00	$4,000.00	$286,609.00
3	Brick pavers			SY	$0.00	$0.00	$6,720.00	$41,000.00	$20,447.00
					TOTAL: SITE IMPROVEMENTS	**$0.00**	**$32,880.00**	**$80,000.00**	**$356,416.00**

STRUCTURAL			***Quantities provided are estimated and for bidding purposes only**						
ITEM NUMBER	**ITEM DESCRIPTION**	**INDICATE "SELF-PERFORMED" OR NAME SUBCONTRACTOR**	**QTY.**	**UNIT OF MEASURE**	**UNIT COST**	**TOTAL COST**	**TOTAL COST**	**TOTAL COST**	**TOTAL COST**
1	Install all foundation plan components per plan specs.		1	Lump sum	N/A	$0.00	$67,200.00	$60,000.00	$84,017.00
2	Strip all forms and cleanup once concrete has cured.		1	Lump sum	N/A	$0.00	$2,400.00	$3,500.00	$7,346.00
3	Install all framing plan components per plan specs. Including Trellis adjacent to Cabana.		1	Lump sum	N/A	$0.00	$225,000.00	$7,000.00	$6,035.00
4	Install Hardy Frame components per plan specs.		1	Lump sum	N/A	$0.00	$1,800.00	$7,000.00	$13,258.00
					TOTAL: STRUCTURAL	**$0.00**	**$296,400.00**	**$77,500.00**	**$110,656.00**

DETAILED BID BREAKDOWN FORM

Owner: City of Rolling Hills
Project Type: ADA City Project
Contractor: _____

Bergeman GROUP
www.bergemangroup.com

ITEM #	ITEM DESCRIPTION	INDICATE "SELF-PERFORMED" OR NAME SUBCONTRACTOR	QTY.	UNIT OF MEASURE	UNIT COST	TOTAL COST	Fidelity TOTAL COST	RAMSA TOTAL COST	US Builders TOTAL COST
PLUMBING			*Quantities provided are estimated and for bidding purposes only						
1	Installation of all rough plumbing per specs on plans.		1	Lump sum	N/A	$0.00	$27,600.00	$36,000.00	$28,998.00
~~2~~	~~Installation of ADA hardware in restrooms.~~		~~1~~	~~Lump sum~~	~~N/A~~	~~$0.00~~	~~$0.00~~	~~$0.00~~	~~$0.00~~
~~3~~	~~Installation of water heater tanks per specs on plans.~~			~~EA~~	~~$0.00~~	~~$0.00~~	~~$0.00~~	~~$0.00~~	~~$0.00~~
~~4~~	~~Installation of all finish fixtures per specs on plans.~~		~~1~~	~~Lump sum~~	~~N/A~~	~~$0.00~~	~~$0.00~~	~~$0.00~~	~~$0.00~~
					TOTAL: PLUMBING	**$0.00**	**$27,600.00**	**$36,000.00**	**$28,998.00**

ITEM #	ITEM DESCRIPTION	INDICATE "SELF-PERFORMED" OR NAME SUBCONTRACTOR	QTY.	UNIT OF MEASURE	UNIT COST	TOTAL COST	Fidelity TOTAL COST	RAMSA TOTAL COST	US Builders TOTAL COST
ELECTRICAL			*Quantities provided are estimated and for bidding purposes only						
1	Installation of all rough electrical per specs on plans.		1	Lump sum	N/A	$0.00	$21,120.00	$55,000.00	$79,824.00
2	Providing Title 24 specs on all materials used.		1	Lump sum	N/A	$0.00	$1,560.00	$5,000.00	$0.00
3	Installation of fixtures embedded in concrete curbs per specs on plans.		1	Lump sum	N/A	$0.00	$6,720.00	$9,700.00	$68,545.00
~~4~~	~~Installation of all finish fixtures per specs on plan. Including park lights~~.		~~1~~	~~Lump sum~~	~~N/A~~	~~$0.00~~	~~$0.00~~	~~$0.00~~	~~$0.00~~
					TOTAL: ELECTRICAL	**$0.00**	**$29,400.00**	**$69,700.00**	**$148,369.00**

PROJECT TOTALS				
TOTAL PROJECT CONSTRUCTION COSTS	**$0.00**	**$700,360.00**	**$709,700.00**	**$2,371,553.00**
Performance & Payment Bond Percentage (%)	0.00%	2.50%	2.50%	2.50%
Performance & Payment Bond Cost ($$)	$0.00	$17,509.00	$17,742.50	$59,288.83
Contingency 10%	$0.00	$70,036.00	$70,970.00	$217,297.00
TOTAL PROJECT CONSTRUCTION COSTS W/ PERFORMANCE & PAYMENT BONDS WITH CONTINGENCY	**$0.00**	**$787,905.00**	**$798,412.50**	**$2,648,138.83**
TOTAL WORKING DAYS TO COMPLETE PROJECT				

ALTERNATES

ITEM NUMBER	ITEM DESCRIPTION	INDICATE "SELF-PERFORMED" OR NAME SUBCONTRACTOR	QUANTITY	UNIT OF MEASURE	UNIT COST	TOTAL COST	Fidelity TOTAL COST	RAMSA TOTAL COST	US Builders TOTAL COST
1	Install sewer connection per "Sewer Main Improvement Plan" drawings.		1	Lump sum	N/A	$0.00	$810,000.00	$95,000.00	$1,680,845.00
2	Remove sewer connection to existing septic tank.		1	Lump sum	N/A	$0.00	$420,000.00	$15,500.00	$119,811.00
					TOTAL PROJECT CONSTRUCTION COSTS	**$0.00**	**$1,230,000.00**	**$110,500.00**	**$1,800,656.00**
					ALTERNATES Performance & Payment Bond Percentage (%)	0.00%	2.50%	2.50%	2.50%
					Performance & Payment Bond Cost ($$) OF **ALTERNATES**	$0.00	$30,750.00	$2,762.50	$45,016.40
					Contingency 10%	$0.00	$123,000.00	$11,050.00	$125,947.00
					TOTAL ALTERNATES COSTS W/ PERFORMANCE & PAYMENT BONDS AND CONTINGENCY	$0.00	$1,383,750.00	$124,312.50	$1,971,619.40

DETAILED BID BREAKDOWN FORM

Owner: City of Rolling Hills
Project Type: ADA City Project
Contractor: _____

www.bergemangroup.com

ITEM #	ITEM DESCRIPTION	INDICATE "SELF-PERFORMED" OR NAME SUBCONTRACTOR	QTY.	UNIT OF MEASURE	UNIT COST	TOTAL COST	Fidelity TOTAL COST	RAMSA TOTAL COST	US Builders TOTAL COST

ALLOWANCES

ITEM NUMBER	ITEM DESCRIPTION	INDICATE "SELF-PERFORMED" OR NAME SUBCONTRACTOR	QTY.	UNIT OF MEASURE	UNIT COST	TOTAL COST	TOTAL COST	TOTAL COST	TOTAL COST
1	Subgrade compaction testing		1	EA	$0.00	$0.00	$2,400.00	$7,000.00	$20,549.00
2	Special Inspections as required by City of Rolling Hills.		1	EA	$0.00	$0.00	$3,600.00	$10,000.00	$13,699.00
~~3~~	~~Additional Architectural Services~~		~~1~~	~~Lump sum~~	~~N/A~~	~~$0.00~~	~~$0.00~~	~~$0.00~~	~~$0.00~~
4	Existing Landscape repairs and replacements.		1	Lump sum	N/A	$0.00	$90,400.00	$50,000.00	$27,398.00
					TOTAL PROJECT CONSTRUCTION COSTS	**$0.00**	**$96,400.00**	**$67,000.00**	**$61,646.00**
					ALLOWANCES Performance & Payment Bond Percentage (%)	0.00%	2.50%	2.50%	2.50%
					Performance & Payment Bond Cost ($) OF **ALLOWANCES**	$0.00	$2,410.00	$1,675.00	$1,541.15
					Contingency 10%	$0.00	$9,640.00	$6,700.00	$4,623.00
					TOTAL ALLOWANCES COSTS W/ PERFORMANCE & PAYMENT BONDS AND CONTINGENCY	$0.00	$108,450.00	$75,375.00	$67,810.15

GRAND TOTAL

					GRAND TOTAL PROJECT CONSTRUCTION COSTS W/ ALTERNATES, ALLOWANCES AND PERFORMANCE & PAYMENT BONDS WITH CONTINGENCY	$0.00	$2,280,105.00	$998,100.00	$4,687,568.38

FY2024-2025

TENNIS COURT ADA IMPROVEMENT PROJECT

PROJECT NO. 2025-01

REQUEST FOR BID

City of Rolling Hills
2 Portuguese Bend Road
Rolling Hills, CA 90274
Phone: (310) 377-1521
Fax: (310) 377-7288
E-mail: cityclerk@cityofrh.net (for inquiries only, bids must be sealed)

Table of Contents

Notice to Contractors Inviting Bids *1*

Instructions to Bidders: *4*

PROPOSAL *12*

BIDDERS PROPOSAL *14*

BID BOND *17*

Bidders Qualifications and References *19*

DESIGNATION OF SUBCONTRACTORS *22*

Contractor's Affidavit of Non-collusion *25*

Pre-Bid Site Inspection Certification *27*

Workers' Compensation Certificate *28*

Reference Standards *29*

General Conditions *31*

Article 1 - Preliminary Provisions *32*

1.01 - City's Representative. **32**

1.02 - Contractor's Representative. **32**

1.03 - Permits and Licenses. **32**

1.04 - Waiver **32**

1.05 - Data Furnished by the Contractor. **32**

1.06 - Contract Drawings. **33**

1.07 - Specifications and Drawings **33**

1.08 - Lines, Grades, and Measurements. **34**

1.09 - Right of Way **34**

1.10 - Assignment of Antitrust Cause of Action **34**

1.11 - Signs **35**

Article 2 - Performance of Work *36*

2.02 - No Assignment **36**

2.03 - Standard of Performance **36**

2.04 - Defective Work **36**

2.05 - Communications Regarding the Work **36**

2.06 - Independent Contractor **37**

2.07 - Emergency Work **37**
2.08 - Subcontractors **37**
2.09 - Use of Facilities Prior to Completion of Contract **38**
2.10 - Cooperation with other Work Forces. **38**
2.11 - Agreements with Property Owners **39**
2.12 - Protection of Property **39**
2.13 - Contractor's Responsibilities for Losses or Liabilities **39**
2.14 - Guarantee of Work **40**
2.15 - Cleaning and Environmental Controls. **41**
Article 3 - Preliminary Provisions ***42***
3.01 - Commencement, Prosecution, and Completion of Work **42**
3.02 - City's Discretion to Extend Time **42**
3.03 - Delays and Extensions of Time for Contractor **42**
3.04 - Climatic Conditions **44**
3.05 - Safety Hazard **44**
3.06 - Liquidated Damages **44**
Article 4 - Construction Progress Schedules ***46***
4.01 - Initial Schedule **46**
4.02 - Revised Schedules **46**
Article 5 - Suspension or Termination of Contract ***47***
5.01 - Suspension of Work-Default by Contractor **47**
5.02 - Suspension of Work-Contract without Fault **47**
5.03 - Decision of Engineer Final **48**
5.04 - Remainder of Contract in Effect **48**
5.05 - Allocation of Cost **48**
5.06 - Termination of Contract-Default by Contractor **49**
5.07 - Termination of Contract - Contractor without Fault **50**
Article 6 - Changes ***51***
6.01 - Changes Initiated by City **51**
6.02 - Changes at the Contractor's Request **51**
6.03 - Change Orders - Procedure **51**
Article 7 - Contract Payments and Claims ***54***
7.01 - General **54**

7.02 - Schedule of Costs for Payments **54**
7.04 - Final Payment and Release of Claims **55**
7.05 - Force-Account Payment **56**
7.06 - Claims and Protests-Contract Requirements **60**
Article 8 - Materials ***61***
8.01 - General **61**
8.02 - Quality and Workmanship **61**
8.03 - Trade Names and "Or Approved Equal" Provision **61**
8.04 - Approval of Materials **62**
8.05 - Ordering Materials **62**
8.06 - Authority of the Engineer **62**
8.07 - Inspection **63**
8.08 - Infringement of Patents **63**
Article 9 - Submittals ***65***
9.01 - General **65**
9.02 - Product Handling **65**
9.03 - Schedule of Submittals **66**
9.04 - Shop Drawings **66**
9.05 - Colors **66**
9.06 - Manufacturers' Literature **66**
9.07 - Substitutions **66**
9.08 - Manuals **67**
9.09 - As-Built Drawings **67**
9.10 - Submittals Quantities **68**
9.11 - Identification of Submittals **68**
9.12 - Schedule of Submittals **68**
9.13 - Coordination of Submittals **68**
9.14 - Timing of Submittals **69**
9.15 - Approval by City **69**
9.16 - Changes to Approved Submittals **70**
Article 10 - Safety ***71***
10.01 - Protection of Persons and Property **71**
10.03 - Differing Site Conditions **72**

10.04 - Traffic Regulation **73**
10.05 - Traffic Control Devices **73**
10.06 - Execution **74**
10.07 - Flagging **74**
Article 11 - Indemnity, Insurance and Bonds ***75***
11.01 - Indemnity Standard Specifications **75**
11.01-1 - Contractor's Duty **75**
11.01-2 - Civil Code Exception **75**
11.01-3 - Nonwaiver of Rights **76**
11.01-4 - Waiver of Right of Subrogation **76**
11.01-5 - Survival **76**
11.02 - Minimum Scope of Insurance **76**
11.03 - Minimum Limits of Insurance **77**
11.04 - Deductibles and Self-Insured Retentions **77**
11.05 - Other Insurance Provisions **77**
11.06 - Acceptability of Insurers **78**
11.07 - Verification of Coverage **78**
11.08 - Subcontractors **78**
11.09 - Risk Management **79**
11.10 - Endorsements and Certificate **79**
11.11 - Bonds **79**
Article 12 - Labor Provisions ***81***
12.01 - Working Hours **81**
12.02 - Cost of Overtime Construction Inspection **81**
12.03 - Compliance with State Labor Code **82**
12.04 - Wage Rates **83**
12.05 - Employment of Apprentices **84**
12.06 - Character of Workmen **84**
Exhibit A – General Liability Endorsement ***87***
Exhibit B – Automobile Liability Endorsement ***89***
Exhibit C – Waiver of Subrogation and Contribution ***91***
Exhibit D – Deductible Sample Letter ***92***
Exhibit E – Performance Bond ***93***

Exhibit F – Payment Bond *96*
Exhibit G – Maintenance Bond *99*
Exhibit H - Notice of Award of a Public Works Contract *101*
Exhibit I - Agreement *102*
Exhibit J - Notice to Proceed *124*
Exhibit K – Contractor's Waiver & Affidavit *125*
Exhibit L - Notice of Acceptance *126*
Exhibit M - Notice of Completion *127*
Exhibit N – Project Plans *128*

City of Rolling Hills

Notice to Contractors Inviting Bids

January 2025

NOTICE IS HEREBY GIVEN that sealed proposals for performing the following described work will be received at the office of the City Clerk of the City of Rolling Hills, 2 Portuguese Bend Road, Rolling Hills, California, until **2:00 P.M. on February 18, 2025**. Thereafter said bids will be publicly opened and read in the City Clerk's office of said City.

Tennis Court ADA Improvement Project, Job No. 2025-01

The project work shall include the following tasks:

The work includes demolition and removals of all existing improvements/features within the project area, grading and site preparation, construction of retaining wall, hardscape improvements, underground utilities; foundation, plumbing, and electrical undergrounding for future Cabana building, and other works per plans and specifications.

Bidders shall have an active **Class "A" or "B"** license from the Contractor's State License Board, a minimum of 5 years of applicable experience and 5 recently completed similar public works projects, at the time of submitting bid.

The project contract shall be completed and facility shall be made ready for service within the agreed upon working days submitted with Contractors bid and after the Notice to Proceed is issued.

In accordance with Labor Code Section 1770 et seq., this Project is a "public work," and thus, the Contractor and any Subcontractors must pay wages in accordance with the determination of the Director of the Department of Industrial Relations ("DIR") regarding the prevailing rate of per diem wages. Copies of those rates are on file with the Director of Public Works, and are available to any interested party upon request. Contractor shall post a copy of the DIR's determination of the prevailing rate of per diem wages at each job site.

No contractor or subcontractor may be listed on a bid proposal for a public works project unless registered with the Department of Industrial Relations pursuant to Labor Code section 1725.5 [with limited exceptions from this requirement for bid purposes only under Labor Code section 1771.1(a)].

No contractor or subcontractor may be awarded a contract for public work on a public works project unless registered with the Department of Industrial Relations pursuant to Labor Code section 1725.5.

This project is subject to compliance monitoring and enforcement by the Department of Industrial Relations.

Five percent of the payments due to the successful Contractor shall be withheld by City as retention for performance security, but the Contractor may substitute securities for said retention pursuant to Section 7.04 of the General Conditions.

If the Project includes the construction of a pipeline, sewer, sewage disposal system, boring and jacking pits, or similar trenches or open excavations, which are five feet or deeper, the bid shall contain, as part of the lump sum bid package, adequate sheeting, shoring, and bracing, or equivalent method, for the protection of life or limb, which shall conform to all applicable safety laws, rules, regulations and orders.

If the Bidder is awarded the contract, the contract shall be terminated and the bid bond forfeited if the Bidder fails to provide the applicable insurance certificates and bonds within the time set forth in Section 21 of the Instructions to Bidders.

Plans and specifications are only available from the City electronically. Paper copies are not available from the City. Bidders may request plans, specifications, and bid documents by emailing the City Clerk at: cityclerk@cityofrh.net. All companies requesting project documents will be added to the Project Plan Holder List.

To be included on the Plan Holder's List for this project, a prospective bidder must provide the firm's name, address, telephone number, fax number, a contact person, and a valid email address to the City Clerk at cityclerk@cityofrh.net. It is not required to be on the Plan Holder's list, however any addenda will be sent via email only to those who are on the Plan Holder's List. Addenda will also be posted on the City website at https://www.rolling-hills.org/business/construction_bids/index.php. Receipt of any Addendum must be acknowledged by the bidder on the form and included in its submitted Proposal.

Proposals (bids) to perform the work shall be made on the forms provided by the Project Manager / Consulting Engineer and shall be submitted complete, including bid bond and list of subcontractors, in accordance with the Instructions to Bidders and other requirements of the bid document. In order to qualify to bid this project, bidders must obtain and properly execute a hardcopy of the contract documents. Each bidder wishing to submit a bid proposal shall print a hard copy of the City's bid proposal documents for submittal from the sent or downloaded electronic set. The City's bid proposal documents include the following forms: Proposal, Bidder's Proposal, Bid Bond, Bidder's Qualifications & References, Designation of Subcontractors,

Contractor's Affidavit of Non- collusion, Pre-bid Site Inspection Certification, Workers' Compensation Certificate, and Receipt Acknowledgment of all addenda if any.

An optional pre-bid job walk will be held at the job site, City Hall, 2 Portuguese Bend Road, Rolling Hills, at 10:00 a.m., on January 29, 2025. To allow the City to coordinate this job walk, please register with the project manager via phone or email by 3:00 p.m. on January 27, 2025. Please include your name, phone number, firm name and the number of people attending with you.

Contact project manager, Christian Horvath, at 310-377-1521 or chorvath@cityofrh.net for questions regarding this project.

CITY OF ROLLING HILLS, CALIFORNIA

Christian Horvath, City Clerk of the City of Rolling Hills

Instructions to Bidders:

1. **Registration of Contractors and Subcontractors**

   Before submitting bids, contractors shall be licensed in accordance with the provisions of all applicable Business and Professions Code of the State of California, including, but not limited to Chapter 9, Division III and submit the number and classification of said licenses.

   All contractors and subcontractors who bid or work on a public works project must register and pay an annual fee to the Department of Industrial Relations (DIR).

2. **Questions Prior to Opening Bid**

   Questions regarding documents, discrepancies, omissions, or intent of specifications or drawings, shall be communicated to the Project Manager / Consulting Engineer, in writing, by 5:00 PM on February 6, 2025 to provide time for issuing and forwarding an addendum should the City consider an addendum necessary. Responses to all questions received will be posted by 5:00 PM on February 11, 2025. The City will not be responsible for oral interpretation of the specifications and drawings. Submit all questions to Christian Horvath at chorvath@cityofrh.net.

3. **Obtaining Drawings and Documents**

   Interested companies may request plans, specifications, and bid documents (project documents) by emailing the City Clerk at: cityclerk@cityofrh.net. All companies requesting project documents will be added to the Project Plan Holder List. In order to qualify to bid this project, bidders must obtain and properly execute a hardcopy of the contract documents.

   To be included on the Plan Holder's List for this project, a prospective bidder must provide the firm's name, address, telephone number, fax number, a contact person, and a valid email address to the City Clerk at cityclerk@cityofrh.net. It is not required to be on the Plan Holder's List. However, any pertinent information or any addenda will be sent via email only to those who are on the Plan Holder's List. This information will also be posted on the City website at: https://www.rolling-hills.org/business/construction_bids/index.php. Receipt of any Addendum must be acknowledged by the bidder on the form provided with the Addendum and must be included with the submitted Proposal.

4. Proposal Forms - Submittal

The proposal shall be made on the forms provided herein with the blank spaces properly filled in. The phraseology shall not be changed, and no additions shall be made to the items mentioned herein. Unauthorized conditions, limitations, or provisions attached to a proposal will render it informal and may cause its rejection. All forms requiring specific information shall be completed with all applicable information for a bid to be considered responsive. Special attention should be given to completing:

1. Bidder's Qualifications and References;
2. Designation of Subcontractors; and
3. Bidder's Bond

Include all proposal forms. Enclose the proposal in a sealed envelope; type or print on the envelope "Proposal for" followed by the title and specification number and the date and time of bid opening as they appear on the cover of this Specification book, and the bidder's name and address. The envelope may be mailed, hand delivered, or delivered by courier or package delivery service.

Mailed proposals shall be addressed as follows:

City Clerk
City of Rolling Hills
2 Portuguese Bend Road
Rolling Hills, CA 90274

Proposals that are hand delivered or delivered by courier or package delivery service shall be presented to:

City Clerk
City of Rolling Hills
2 Portuguese Bend Road
Rolling Hills, CA 90274

Proposals received after bid opening time as stated in this Specification book or at any place other than the office of the City Clerk will not be considered. Prior to the stated bid opening time, a bidder may withdraw his proposal without prejudice to himself by submitting a written request for its withdrawal to the City Clerk. The City's Project Manager will confirm receipt of the request to withdraw proposal via email.

5. Proposal Form

The full name, business address, zip code, and business telephone number, with area code of the individual, partnership, joint venture, or corporation submitting the proposal shall be typewritten or legibly printed on the proposal. The bidder shall sign the proposal with his usual signature. An individual submitting a proposal or a partner signing for a partnership shall sign in the presence of a Notary Public and the notarial acknowledgment shall be attached to the proposal. A partner shall sign for a partnership and the names and addresses of all partners shall be given. An officer shall sign for a corporation, the corporate name shall be attested by the corporate seal, and the names and titles of all officers of the corporation shall be given. A signature other than a corporate officer's will be accepted if an authenticated power of attorney is attached.

6. Proposal Form - Prices

The bidder shall include in his bid price(s) any and all expense or costs that may be necessary to complete the project in accordance with the requirements of the contract. The bidder shall state for each item on the proposal form, in clearly legible figures, the unit price and item total or lump sum, as the case may be, for which he proposes to supply labor, materials, and equipment and to perform the work required by this Specification. Alteration of a price by erasure or interlineations must be explained or noted in the proposal over the signature of the bidder. In the case of a unit price item, the amount set forth, as the item total shall be the product of the estimated quantity times the unit price bid. In the event of a discrepancy between the unit price bid and the item total, the unit price shall prevail; however, if the unit price is ambiguous, unintelligible, or uncertain for any cause, or is omitted, or is the same amount as the entry for the item total, then the item total shall prevail and shall be divided by the estimated quantity for the item and the price thus obtained shall be the unit price. In the event of a discrepancy between the unit price extension and the total amount bid or summaries of totals, the unit price extension total shall prevail.

7. Bidder’s Bond

Each bidder shall submit with his proposal a bidder’s bond for not less than 10% of the total amount of the bid, using the form entitled “Bidder’s Bond” contained in this Specification, and properly executed and acknowledged by the bidder and by a corporate surety authorized to transact such business in the State of California. Such bond shall be accompanied by a power of attorney from the surety company authorizing the person executing the bond to sign on behalf of the company. If the bond is executed outside the State of California, all copies of the bond must be countersigned by a California representative of the surety. The signature of the person executing the bond shall be acknowledged by a notary public as the signature of the person designated in the power of attorney. The surety or sureties on the bond must be satisfactory to the

City. The City will reject a surety bond obtained from any company not holding Certificate of Authority from the U.S. Secretary of the Treasury under the Act of Congress approved July 30, 1947, (6 U.S.C., Secs. 6-13) as acceptable sureties on federal bonds. Any alteration of said form of bidder's bond, or imperfection in the execution thereof, as herein required, will render it informal and may, at the option of the City, result in the rejection of the proposal under which the bidder's bond is submitted.

8. Declaration of Non-collusion

Each bidder shall execute and submit with the proposal the Declaration of Non-collusion. The bidder signing the Declaration of Non-collusion shall meet all requirements for signing the proposal form.

9. Bidder's Qualifications and References

The bidder must complete and submit with the proposal all information required, on both sides of the form, entitled "Bidder's Qualifications and References" and sign the form. If no information is to be filled in a blank space, then write "none".

10. Designation of Subcontractors

The bidder must complete and submit with the proposal the form entitled "Designation of Subcontractors" for all subcontracts in excess of one-half of one percent of the total bid. Subcontractors' names, license numbers and class, DIR registration numbers, and city of business shall be complete and legible. Clearly state that portion of the work to be done by each subcontractor listed, by trade and by estimated dollar amount. If this form is completed by hand in the proposal package, the Contractor shall also submit a typed listing of subcontractors, listing subcontractors' name, complete address, phone number, license, trade and estimated dollar amount within 24 hours of the bid opening.

11. Examination of Drawings, Specifications, and Site of Work

The bidder shall examine carefully the site of the work contemplated and the proposal, drawings, and specifications therefore. The submission of a bid will be conclusive evidence that the bidder has investigated and is satisfied as to the conditions to be encountered, as to the character, quality, and quantities of work to be performed and materials to be furnished, the difficulties to be encountered, and to the requirements of the proposal, drawings, specifications, and other contract documents. The bidder is required to ascertain the locations of the existing utility services, and other underground facilities, and to provide for carrying out his operations so as to cause the minimum possible inconvenience to the occupants of property along any streets affected. All work and costs involved in the safeguarding of the property of others shall be at the expense of the bidder to whom the contract may be awarded.

The bidder hereby certifies that he/she has examined the local conditions, has read each and every clause of the Specifications, and that he has included all costs necessary to complete the specified work in his bid prices, and the bidder agrees that if he is awarded the contract he will make no claim against the City based upon ignorance of local conditions or misunderstanding of any of the provisions of the contract. Should the conditions turn out otherwise than anticipated by him/her, the bidder agrees to assume all risks incident thereto.

12. Interpretation of Specifications

Should a bidder find discrepancies in, or omissions from, the specifications or plans, or should the bidder be in doubt as to their meaning, the bidder shall at once notify the Project Manager / Consulting Engineer, requesting an interpretation or clarification. The person submitting such request will be responsible for its prompt delivery. Should the Project Manager / Consulting Engineer find that the point in question is not clearly and fully set forth; the Project Manager / Consulting Engineer may issue a written addendum which will be sent to all bidders of record. The Project Manager / Consulting Engineer will not be responsible for any other explanation or interpretation of the plans or specifications, or for any oral instructions. If the bidder does not so notify the Project Manager / Consulting Engineer, the bidder shall be conclusively deemed to have read, understood and agreed with all of the information and materials contained in the bid documents.

13. Experience

Bidders, if required, shall present satisfactory evidence that they have been regularly engaged in furnishing such material and equipment and constructing such work as they propose to furnish or construct and that they are fully prepared with necessary capital, equipment, and material to begin work promptly and to conduct it as required by this Specification.

14. Prices and Payments

Approximate quantities listed in the Notice to Contractors and quantities listed for unit price items on the bidding form, are rough estimates given for comparing bids, and no claim shall be made against the City for excess or deficiency therein, actual or relative. Payment at the prices agreed upon will be in full for the completed work and will cover materials, supplies, labor, tools, equipment, and all other expenditures incident to a satisfactory compliance with the contract, unless otherwise specifically provided.

15. Substitutions

To obtain approval during bid period to use unspecified products, bidders shall submit written requests at least ten (10) working days before the bid date and hour. Requests received after this time will not be considered. Requests shall clearly describe the product for which approval is asked, including all data necessary to demonstrate acceptability. If the product is acceptable, an addendum will be issued covering it.

16. Modifying Bid

Any bidder may modify his bid by written communication, provided such communication is received by the City Clerk's Office prior to the bid opening time. The written communication should not reveal the bid price but should state the addition or subtraction or other modification so that the final prices or terms will not be known by the City until the sealed bid is opened.

17. Bid Opening

All proposals will be opened and declared publicly at the time and place stated in the Notice to Contractors. Bidders, their representatives, and other interested parties are invited to be present. After the bid opening, proposals may be inspected at the Rolling Hills City Hall, until 3:00 p.m. on the working day following the bid opening.

18. Mistakes in the Bid

A bidder shall be relieved of a bid due to mistakes only if the bidder can establish to the satisfaction of the City that all of the following circumstances exist:

A. A mistake was made.
B. The bidder gave the public entity written notice of the mistake within five working days, excluding Saturdays, Sundays, and City or state holidays, after the opening of the bids , specifying in the notice in detail how the mistake occurred.
C. The mistake made the bid materially different than the bidder intended it to be.
D. The mistake was made in filling out the bid and not due to error in judgment or to carelessness in inspecting the site of the work, or in reading the plans and specifications.

19. Award

The City reserves the right to reject any or all proposals and to waive technical defects, as the interest of the City may require. Award of contract or rejection of bid proposals will be made by the City within 90 calendar days following the bid opening.

20. Basis of Award

Contract will be awarded to the lowest responsible bidder meeting all requirements set forth in these specifications. The City will award the contract based on the lowest base bid, or the lowest base bid plus the first alternate, or the lowest base bid plus an orderly combination of the alternates, in the order said alternates were advertised.

21. Execution of Contract

Within ten (10) working days after being notified by City that he has been awarded the contract, Contractor shall deliver to the Project Manager / Consulting Engineer the following documents:

A. Two (2) copies of the Agreement in the form included herein, properly executed by Contractor and, if the Contractor is a corporation, evidence of its corporate existence and that the persons signing the Agreement are authorized to do so.
B. Properly executed copies of the following:

   (a) Faithful Performance Bond
   (b) Labor and Material Bond, and
   (c) Maintenance Bond in accordance with the requirements set forth in Article 11 of the General Conditions and attached thereto.

C. Properly executed copies on the following City forms:
   (a) The General Liability Endorsement and Waiver of Subrogation,
   (b) The Automotive Liability Endorsement and Waiver of Subrogation, and
   (c) Workers' Compensation Waiver of Subrogation.

D. Certificate of Insurance with 30-day notice in accordance with the requirements set forth in Article 11 of the General Conditions and attached thereto.

In any event that the tenth working day falls on Saturday, Sunday or a legal holiday for the State of California, the aforesaid documents shall be delivered by the following working day. After receipt of said documents within said time period or any extension thereof granted by the Project Manager / Consulting Engineer, the City shall execute the Agreement and return one of said two copies to Contractor for his files.

22. General Prevailing Wage Rates

In accordance with Labor Code Section 1770 et seq., this Project is a “public work,” and thus, the Contractor and any Subcontractors must pay wages in accordance with the

determination of the Director of the Department of Industrial Relations ("DIR") regarding the prevailing rate of per diem wages. Copies of those rates are on file with the City Clerk's Office, and are available to any interested party upon request. Contractor shall post a copy of the DIR's determination of the prevailing rate of per diem wages at each job site.

23. Failure to Execute Contract

If the bidder to whom the award is made fails to enter into the contract as herein provided and furnish the said bonds and insurance, this shall be just cause for the annulment of the award and the forfeiture of the Bidder's Bond, and an award may, in the discretion of the Project Manager / Consulting Engineer, be made to the bidder whose proposal is the next most acceptable to the City in the opinion of the City Council, and such bidder shall fulfill every term, covenant and condition herein as if he/she were the party to whom the first award was made.

24. Bid Protest Procedures

Any bid protest must be in writing and received by the City Clerk before 5:00 p.m. no later than five working days following bid opening (the "Bid Protest Deadline") and must comply with the City's Standard Bid Protest Procedures, which are posted on the City's website at

https://www.rolling-hills.org/business/construction_bids/index.php

PROPOSAL

Date: _____, 20___

Tennis Court ADA Improvement Project, Job No. 2025-01

TO THE CITY OF ROLLING HILLS, ROLLING HILLS, CALIFORNIA

Pursuant to the foregoing Notice to Contractors, the undersigned bidder herewith submits a proposal on the bidding form or forms attached hereto and made a part hereof, and binds himself on award by the City of Rolling Hills under this proposal to execute in accordance with such award a contract, of which this proposal and the said Notice to Contractors, Instructions to Bidders, Specifications, and drawings shall be a part, and to furnish the bond or bonds required by the Specifications. The attached Notice to Contractors, Instructions to Bidders, Specifications, and drawings are made a part of this proposal and all provisions thereof are hereby accepted.

The bidder acknowledges that the Instructions to Bidders provides, among other things, that the Contract shall be terminated and the bid bond forfeited if the contractor fails to provide the applicable insurance certificates and bonds within the time set forth in Section 21 of the Instructions to Bidders.

The bidder further agrees that, in case of his/her default in executing the required contract and the required bond or bonds, or furnishing the required insurance, the money payable under the bid bond accompanying his proposal shall be applied by the City towards payment of the damage to the City on account of such default, as provided in the specifications.

(CORPORATE SEAL OR NOTARIAL ACKNOWLEDGEMENTS OF SIGNATURE - IF PARTNERSHIP OR PROPRIETORSHIP)

Firm _____

By _____

(Signature)

Name/Title _____

Address _____

Zip _____

Phone _____

E-mail: cityclerk@cityofrh.net

Nature of firm (corporation, partnership, etc.) and names of individual members of the firm, or names and titles of officers of the corporation.

_____

_____

_____

_____

Corporation organized under the laws of the State of: _____

BIDDERS PROPOSAL

Name of Bidder: _____ The undersigned, having examined the proposed Contract Documents titled:

Tennis Court ADA Improvement Project, Job No. 2025-01

and having visited the site and examined the conditions affecting the work, hereby proposes and agrees to furnish all labor, materials, equipment, and appliances, and to perform operations necessary to complete the work as required by said proposed Contract Documents as itemized below:

PROJECT BID SCHEDULE - SEE AND COMPLETE SEPARATE EXCEL FILE

BASE BID:

_____ ($_____)

Base Bid Total Sum in Words Base Bid Total Sum in Figures

The City reserves the right to request the unit price of some or all contract items.

_____ _____

Name of Bidder Amount of Certified Check/Bidder's Bond

_____ _____

Address Name of Bonding Company

The price shall include all State, Federal, and other taxes applicable to the project, and shall be a firm offer for a period of Ninety (90) days after the date of bid opening.

Bid Items:

1. General Conditions
   All general conditions applicable to the scope of work, mitigation efforts for dust control, daily and final cleaning, and all permit coordination with the City of Rolling Hills. This also includes all project management items including required OAC meetings, submitting of all RFIs and material submittals.

   Demolition/Removals: General Description of work, not limited to the following; demolition and removal of all existing improvements, utilities, structures within the limits of work shown on plans GR2301100001 necessary to construct the improvements as shown on all plans associated with this project. City requires construction and demolition (C&D) permit for hauling and recycling from third parties and has recycling requirements. The City's franchise waste hauler, Republic Services, will take care of the C&D if they are used.

2. Grading
   Preparation of the soil for the new construction and putback. This defines all grading (rough and fine) with appropriate fill amounts including drainage and erosion controls as noted on the Grading plans.

3. Paving
   General paving at the parking area to align with existing city street. This includes paint striping for the ADA street improvements as well as new crosswalks per the Architectural plans. Contractors must provide all mix design and batch testing for the asphalt to ensure compliance with the specifications.

4. ADA Improvements
   All work improvements to comply with the Americans with Disabilities Act shown on the Grading, Architectural and Landscape plans, not limited to the following:
   a. All work required to install the ADA improvements as shown on approved Grading and Drainage Plans.
   b. Site ADA details on the approved Architectural Plans including new ADA parking Stall signage, striping, and wheel stop per details 17, 18, 8 on Sheet A-602; Stair and Ramp handrails, Stair Nosing, and Stair Warning Striping/Nosing per details 3, 8, 5, and 10 on Sheet A-603.
   c. New restroom fixtures as noted on Sheet A-102.
   d. The lighting as shown on the Landscape Improvement Plans, Sheets LL-1, LL-2, and LL-3

5. Civil Site Improvements
   All work required to install the improvements as shown on approved Retaining Wall Plans and the Landscape Improvement Plans LI-1. The retaining wall scope includes two types of retaining walls: ramp retaining walls and planter retaining walls. The landscape plans show new "sleeves" for the new plantings and for future installation of a landscape irrigation system beneath the Tennis Court ADA hardscape improvements.

6. Structural
   All work required for installation of foundation for the future Cabana Building. Construction of the foundation for the future Cabana in accordance with the approved structural plans and

necessary plumbing and electrical embed connections per both Electrical and Plumbing plans.

7. Plumbing
   Installation of all Plumbing scope noted in the Plumbing drawings including all new utility stubs, all rough plumbing water and wastewater piping beneath Cabana Foundation and Slab as shown on Plumbing Plans P-3, P-4, and P-4.1. Install 1" water service from POC to Cabana as shown on Plumbing Plan P-2. Install 3" wastewater line from Cabana to existing Septic Tank as shown on Plumbing Plan P-2.

8. Electrical
   Installation of all Electrical scope noted in the Electrical drawings including new conduit from power source ("MS") to future Cabana Electrical Panel ("A") as shown on Electrical Plans E-2 and E-4.

9. Alternates
   The City would like to have Bid numbers for possible additional Sewer scope noted on sheet C-3 of the Portuguese Bend/Rolling Hills Road Sewer Main Improvement Plans. This includes removing the current existing connection to a septic tank and replacing with a new 4" connection to the City's municipal sewer system.

10. Allowances
    Contractors will supply additional bid numbers for additional subgrade compaction testing and any special inspections required by the City of Rolling Hills. Additional allowances for additional Architectural services related to the ADA improvements and any existing landscape repairs required during the grading and backfill site construction.

BID BOND

Bond No. :_____ KNOW ALL PERSONS BY THESE PRESENTS that:

WHEREAS the City of Rolling Hills, California ("City"), has issued an invitation for bids for the work described as follows:

Tennis Court ADA Improvement Project, Job No. 2025-01

WHEREAS _____

_____
(Name and address of bidder)

("Principal"), desires to submit a bid to City or the work.

WHEREAS, bidders are required, under the terms of the Section 20170 of the California Public Contract Code, to furnish a form of bidder's security with their bid.

NOW, THEREFORE, we, the undersigned Principal, and _____

_____
(Name and address of Surety)

("Surety") a duly admitted surety insurer under the laws of the State of California, as Surety, are held and firmly bound unto the City in the penal sum of _____ Dollars ($_____), being not less than ten percent (10%) of the total bid price, including alternate, in lawful money of the United States of America, for the payment of which sum well and truly to be made, we bind ourselves, our heirs, executors, administrators, successors, and assigns, jointly and severally, firmly by these presents.

THE CONDITION OF THIS OBLIGATION IS SUCH THAT, if the hereby bound Principal is awarded a contract for the work by the City and, within the time and in the manner required by the bidding specifications, enters into the written form of contract included with bidding specifications, furnishes the required bonds, one to guarantee faithful performance and the other to guarantee payment for labor and materials, and furnishes the required insurance coverage, then this obligation shall become null and void; otherwise, it shall be and remain in full force and effect.

In case suit is brought upon this bond, Surety further agrees to pay all court costs incurred by the City in the suit and reasonable attorneys' fees in an amount fixed by the court.

IN WITNESS WHEREOF, this instrument has been duly executed by Principal and Surety, on the date set forth below, the name of each corporate party being hereto affixed and these presents duly signed by its undersigned representative(s) pursuant to authority of its governing body.

Dated: _____

"Principal" Company Name:	"Surety" Company Name
_____	_____
_____	_____
By: _____	By: _____
Name: _____	Name: _____
Its: _____	Its: _____
By: _____	By: _____
Name: _____	Name: _____
Its: _____	Its: _____
(Seal)	(Seal)

Note: This bond must be dated, all signatures must be notarized, and evidence of the authority of any person signing as attorney-in-fact must be attached.

Bidders Qualifications and References

Name of Bidder _____

THE BIDDER SHALL COMPLETE THE FOLLOWING STATEMENTS:

1. The bidder has been engaged in the contracting business, under the present business name, for _____ years.

2. Experience in work of a nature similar to that covered in the Proposal extends over a period of _____ years.

3. The bidder, as a contractor, has never failed to satisfactorily complete a contract awarded to him, except as follows (Name any and all exceptions and reasons therefore):

_____

_____

_____

4. Contractor's License Number, State of California _____ Class _____

5. Contractor's License Expiration Date _____

6. Department of Industrial Relations (DIR) Registration Number

7. The following contracts have been satisfactorily completed in the last three years for the persons, firm, or authority indicated; and to whom reference is made. (Name five contracts and include the total contract amount as well as the original bid amount for each contract.)

	YEAR	TYPE OF WORK	FINAL CONTRACT AMOUNT	ORIGINAL CONTRACT AMOUNT	LOCATION AND FOR WHOM PERFORMED
A					
B					
C					
D					
E					

8. The following persons may be contacted for information concerning the contract work listed above (list a reference for each contract named).

	NAME	TITLE	ADDRESS	TELEPHONE
A				
B				
C				
D				
E				

9. Reference is hereby made to the following bank or banks as to the financial responsibility of the bidder:

Bank _____Branch_____

Bank _____Branch_____

Bank _____Branch_____

10. Reference is hereby made to the following surety company or companies as to the financial responsibility and general reliability of the bidder:

Surety Company _____ Phone _____

Surety Company _____ Phone _____

11. Following is a list of plant and equipment that is owned by the bidder and is definitely available for use on the proposed project:

QUANTITY	NAME, TYPE, AND CAPACITY	CONDITION	LOCATION

(Attach additional sheets as necessary)

12. All of the above statements as to experience, financial qualifications, and available plant and equipment are submitted in conjunction with the proposal, as a part thereof, and the truthfulness and accuracy of the information is guaranteed by the bidder.

Signature of Bidder _____

Name/Title: _____

DESIGNATION OF SUBCONTRACTORS

NAME OF BIDDER _____

In compliance with the provisions of the Subletting and Subcontracting Fair Practices Act (Division 2, Part 1), Chapter 4 of the Public Contract Code of the State of California, and any amendments thereof), each bidder shall set forth below:

1. The name and location of the place of business of each subcontractor who will perform work or labor or render service to the Contractor in or about the construction of the work or improvement, or a subcontractor licensed in the State of California who, under subcontract to the Contractor, specially fabricates and installs a portion of the work or improvement according to detailed drawings contained in the plans and specifications, in an amount in excess of one-half of one percent of the Contractor's total bid.

2. The portion and estimated dollar amount of the work which will be done by each subcontractor. The Contractor shall list only one subcontractor for each portion as is defined by the Contractor in his bid.

Please type or legibly print (attach additional sheets as necessary).

Name of Subcontractor	**City**	**Portion**	**Estimated $ Amount**
Name: License No. License Class DIR Registration No.			
Name: License No. License Class DIR Registration No.			
Name: License No. License Class DIR Registration No.			
Name: License No. License Class DIR Registration No.			
Name: License No. License Class DIR Registration No.			
Name: License No. License Class DIR Registration No.			

Circumvention by the Contractor of the requirement under Section 4104 of the Public Contract Code to list his subcontractors, by the device of listing another contractor who will in turn sublet portions constituting the majority of the work covered by this contract, shall be considered a violation of Division 2, Part 1, Chapter 4 of the Public Contract Code and shall subject the Contractor to the penalties set forth in Sections 4110 and 4111 of the Public Contract Code.

If the Contractor fails to specify a subcontractor or if the Contractor specifies more than one subcontractor for the same portion for work to be performed under the contract in excess of one-half of one percent of the Contractor's total bid, he agrees that he/she is fully qualified to perform that portion himself/herself, and that he/she shall perform that portion himself/herself. If after award of contract, the Contractor subcontracts, except as provided for in Sections 4107 or 4109 of the Public Contract Code, any such portion of the work, the Contractor shall be subject to the penalties named in Section 4111 of the Public Contract Code.

The Contractor shall not:

A. Substitute any person as subcontractor in place of the subcontractor listed in the original bid, except that the City may, except as otherwise provided in Section 4107.5 of the Public Contract Code, consent to the substitution of another person as subcontractor:

    1. When the subcontractor listed in the bid, after having had a reasonable opportunity to do so, fails or refuses to execute a written contract, based upon the general terms, conditions, plans and specifications for the project involved or the terms of such contractor's written bid, is presented to him/her by the Contractor, or
    2. When the listed subcontractor becomes bankrupt or insolvent, or
    3. When the listed subcontractor fails or refuses to perform his/her subcontract, or
    4. When the listed subcontractor fails or refuses to meet the bond requirements of the Contractor as set forth in Section 43108 of the Public Contract Code, or
    5. When the Contractor demonstrates to the City, subject to the further provisions set forth in Section 4107.5 of the Public Contract Code, that the name of the subcontractor was listed as the result of an inadvertent clerical error, or
    6. When the listed subcontractor is not licensed pursuant to the Contractors License Law, or
    7. When the City determines that the work performed by the listed subcontractor is substantially unsatisfactory and not in substantial accordance with the plans and specifications, or that the subcontractor is substantially delaying or disrupting the progress of the work.

B. Permit any subcontract to be voluntarily assigned or transferred or allow it to be performed by anyone other than the original subcontractor listed in the original bid, without the consent of the City.
C. Other than in the performance of "change orders" causing changes or deviations from the original contract, sublet or subcontract any portion of the work in excess of one-half

of one percent of the Contractor's total bid as to which his original bid did not designate a subcontractor.

Prior to approval of a Contractor's request for a subcontractor substitution, the City will give notice in writing to the listed subcontractor of the Contractor's request to substitute and of the reason for the request. The notice will be served by certified or registered mail to the last known address of the subcontractor. The listed subcontractor who has been so notified shall have five working days within which to transmit to the City written objections to the substitution. Failure to file these written objections shall constitute the listed subcontractor's consent to the substitution.

If written objections are filed, the City will give notice in writing of at least five working days to the listed subcontractor of a hearing by the City on the Contractor’s request for substitution.

The Contractor, as a condition to asserting a claim of inadvertent clerical error in the listing of a subcontractor, shall within two working days after the time of the bid opening by the City, give written notice to the City and copies of such notice to both the subcontractor he claims to have listed in error and the intended subcontractor who had bid to the Contractor prior to the bid opening.

Subletting or subcontracting of any portion of the work in excess of one-half of one percent of the Contractor's total bid as to which no subcontractor was designated in the original bid shall only be permitted in cases of public emergency or necessity, and then only after a finding reduced to writing as a public record of the City setting forth the facts constituting the emergency or necessity.

If the Contractor violates any of the provisions of Division 2, Part 1, Chapter 4 of the Public Contract Code or any amendments thereof, the Contractor violates his contract and the City may exercise the option, in its own discretion, of (1) canceling its contract, or (2) assessing the Contractor a penalty in an amount not more than ten percent of the amount of the subcontract involved, and this penalty shall be deposited in the fund out of which the prime contract is awarded. In any proceedings under Section 4110 of the Public Contract Code the Contractor shall be entitled to a public hearing and to five days’ notice of the time and place thereof.

Contractor's Affidavit of Non-collusion

STATE OF CALIFORNIA)
) SS
COUNTY OF LOS ANGELES)

_____ being first duly sworn, deposes and says:

1. That he/she is the _____ (Title of office if a corporation: "sole owner," "Partner," or other proper title) of _____, hereinafter called "Contractor", who has submitted to the City of Rolling Hills a proposal for the construction of **Tennis Court ADA Improvement Project, Job No. 2025-01**;

2. That said proposal is genuine; that the same is not sham; that all statements of fact therein are true;

3. That such proposal was not made in the interest or behalf of any person, partnership, company, association, organization, or corporation not named or disclosed.

4. That the Contractor did not, directly or indirectly induce, solicit or agree with anyone else to submit a false or sham bid, to refrain from bidding, or withdraw his/her bid, to raise or fix the bid price of the Contractor price or of anyone else, or to raise or fix any overhead profit, or cost element of the Contractor's price or the price of anyone else; and did not attempt to induce action prejudicial to the interest of the City of Rolling Hills, or of any other bidder, or anyone else interested in the proposed contract;

5. That the Contractor has not in any manner sought by collusion to secure for himself/herself an advantage over any other bidders or induce action prejudicial to the interests of the City of Rolling Hills or of any other bidder, or anyone else interested in the proposed contract;

6. That the Contractor has not accepted any bid from any subcontractor or material man through any bid depository, the bylaws, rules or regulations, of which prohibit or prevent the Contractor from considering any bid from any subcontractor or material man, which is not processed through said bid depository, or which prevent any subcontractor or material man from bidding to any Contractor who does not use facilities of or accept bids from or through such bid depository;

7. That the Contractor has not been debarred from participation in any state or federal public works project.

8. That the Contractor did not, directly or indirectly, submit the Contractor's bid price or any breakdown thereof, or the contents thereof, or divulge information or data relative thereto

to any corporation, partnership, company, association, organization, bid depository, or to any member or agent thereof, or to any individual or group of individuals, except to the City of Rolling Hills, or to any person or persons who have partnership or other financial interest with said Contractor in his business.

Dated this _____ day of _____ 20___

_____ Contractor

_____ Signature

_____ Name/Title

SUBSCRIBED AND SWORN TO BEFORE ME

ON _____

_____
Notary Public in and for the County of Los Angeles, State of California

Place Notary Seal Above

Pre-Bid Site Inspection Certification

Tennis Court ADA Improvement Project, Job No. 2025-01

The bidder hereby certifies that he or she and his or her Subcontractors have inspected the work site of the above project, and have fully acquainted themselves with all conditions and matters which might in any way affect the work, time of completion or the cost thereof. The bidder also certifies he or she has observed the designated Contractor Work Areas and access routes.

BIDDER:

Company Name:_____

Signature:_____

Name/Title: _____

Date: _____

BIDDER'S INSPECTORS:

Name: _____

Title: _____

Date of Inspection: _____

Name: _____

Title: _____

Date of Inspection: _____

Workers' Compensation Certificate

Tennis Court ADA Improvement Project, Job No. 2025-01

The bidder hereby certifies that he or she is aware of the provisions of Section 3700 of the Labor Code which requires every employer to be insured against liability for workers' compensation or to undertake self-insurance in accordance with the provisions of that code, and will comply with such provisions before commencing the performance of any work on the above project.

BIDDER:

Company Name:_____

Signature:_____

Name/Title: _____

Date: _____

Reference Standards

The standards referred to, except as modified, shall have full force and effect as though printed in this Specification, and shall be the latest edition or revision thereof in effect on the bid opening date, unless a particular edition or issue is indicated. Copies of these standards are not available from the City. Abbreviations and terms, or pronouns in place of them, shall be interpreted as follows:

AASHTO:	American Associated of State Highway and Transportation Officials, Standard Specifications.
ACI:	American Concrete Institute, Standards
AISC:	American Institute of Steel Construction, Specification for the Design, Fabrications, and Erection of Structural Steel for Buildings, and the AISC Code of Standard Practice.
AMCA:	Air Moving and Conditioning association, Standards
ANSI:	American National Standards Institute
APA:	American Plywood Association
API:	American Petroleum Institute
APWA:	American Public Works Association, Specifications for Public Works Construction
ASHRAE	American Society of Heating, Refrigeration and Air Conditioning Engineers
ASME:	American Society of Mechanical Engineers
ASTM:	American Society for Testing and Materials
AWPA:	American Wood-Preservers' Association, Standards
AWS:	American Welding Society
AWWA:	American Water Works Association
CISPI:	Standards Cast Iron Soil Pipe Institute, Standards
CMAA:	Crane Manufacturers' Association of America
CRSI:	Concrete Reinforcing Steel Institute, Standards
CSS:	CalTrans Standard Specifications, State of California, Department of Transportation.
DOSH:	Division of Occupational Safety and Health, State of California, Department of Industrial Relations
ICEA:	Insulated Cable Engineers Association
IEEE:	Institute of Electrical and Electronic Engineers
IESNA:	Illuminating Engineering Society of North America
MSS:	Manufacturers Standardization Society
NAAMM:	National Association of Architectural Metal Manufacturers
NACE:	National Association of Corrosion Engineers, Standards
NEC:	National Electric Code
NEMA:	National Electrical Manufacturers' Association, Standards

RIS:	Redwood Inspection Service, Standard
SDI:	Specifications Steel Door Institute
SMACNA:	Sheet Metal and Air Conditioning Contractors National Association
SSPC:	Steel Structures Painting Council, Specifications
CBC:	California Building Code of the California Building Standards Commission
UL:	Underwriters Laboratories
WCLIB:	West Coast Lumber Inspection Bureau, Standard Grading and Dressing Rules

General Conditions

Article 1 - Preliminary Provisions

1.01 - City's Representative.

The Project Manager / Consulting Engineer (sometimes herein called "Engineer") shall be the representative of the City and, except as otherwise expressly provided herein, shall make all decisions and interpretations to be made by the City under the provisions of the contract documents.

1.02 - Contractor's Representative.

The Contractor shall at all times be represented on the work in person or by a foreman or duly designated agent. Instructions and information given by the Engineer to the Contractor's foreman or agent on the work shall be considered as having been given to the Contractor.

1.03- Permits and Licenses.

A. The Contractor and all subcontractors shall purchase or hold current and valid City of Rolling Hills Businesses Licenses during the entire period of the contract. The Contractor shall obtain all permits required by other agencies of the State and County as well as the City of Rolling Hills. All permits and licenses shall be obtained by and at the expense of the Contractor and/or subcontractors. The Contractor shall enforce the permit requirements. Permit fees to the City of Rolling Hills shall be waived.

B. Where requirements of the permits differ from those of the drawings and specifications, the more stringent requirements shall apply.

C. The Contractor shall be responsible for payment of all assessments, fees, or charges levied or imposed by any governmental or quasi-governmental authority, or public or private utility, in connection with the work during the entire period of the contract.

1.04 - Waiver.

Waiver by City of any breach of any term, covenant, or condition contained in the contract documents shall not be deemed to be a waiver of any subsequent breach of the same or any other term, covenant, or condition contained therein, whether of the same or a different character.

1.05 - Data Furnished by the Contractor.

The Contractor shall furnish the Engineer reasonable facilities for obtaining such information as he may desire respecting the character of the materials and the progress and manner of the work, including all information necessary to determine its costs, such

as the number of men employed, their pay, the time during which they worked on the various classes of construction, and other pertinent data.

1.06 - Contract Drawings.

A. The drawings which form a part of this specification are bound in a separate volume.

B. The City will accept no responsibility for errors resulting from misinterpretation or scaling of the drawings.

1.07 - Specifications and Drawings.

A. The Contractor shall keep on the job site a copy of all specifications, drawings, and change orders pertaining to the work and shall at all times give the Engineer access thereto. Anything mentioned in the specifications and not shown on the drawings, or shown on the drawings and not mentioned in the specifications shall be of like effect as though shown or mentioned in both. In case of difference between drawings and specifications, the specifications shall govern. City specifications shall govern over referenced standards. If neither is applicable, manufacturer's specifications and instructions shall apply. The Engineer will furnish from time to time such detail drawings, plans, profiles, and information as he may consider necessary for the Contractor's guidance, unless otherwise provided in the proposal, contract, or special requirements.

B. The Specifications for this project are the entire agreement between the Contractor and City, which consist of the aforesaid drawings, the Notice to Contractors, the Instructions to Bidders, the Proposal, Bidding Form, Bid Bond, the Bidder's Qualifications and References, the Designation of Subcontractors, the Affidavit of Non- collusion, the Pre-bid Site Inspection Certification, the Worker’s Compensation Certificate, the Reference Standards, the General Conditions, the Exhibits and the Special Conditions. If no Special Conditions are attached hereto, the Specifications are further deemed to incorporate by reference the latest edition of the Standard Specifications for Public Works Construction as an essential part of the contract documents. Copies of the "Green Book" are available for review at the Project Manager / Consulting Engineer's office or for purchase at the following address: Building News, Inc., 10801 National Blvd., Suite 100, Los Angeles, CA 90064.

C. In the event of a conflict between the Agreement and the General Conditions, the former shall prevail.

D. All documents forming the complete contract are intended to integrate so that any condition or work called for in any one and not mentioned in another shall be executed as if mentioned in all documents and set forth in the drawings.

1.08 - Lines, Grades, and Measurements.

A. All lines and grades will be established by the Contractor. The Contractors shall carefully preserve all survey stakes and reference points as far as possible. Should any stakes or points be removed or destroyed unnecessarily by any act of the Contractor or his employees, they must be reset at the Contractor's expense.

B. The Contractor shall inform the Engineer a reasonable length of time in advance of the times and places at which he intends to work in order that inspection may be provided, and that necessary measurements for records and payments may be made with minimum inconvenience.

C. No direct payment will be made for the cost to the Contractor of any of the work or delay occasioned by giving lines and grades, by making other necessary measurements, or by inspection.

1.09 - Right of Way.

A. The site for the installation of equipment or the right of way for the works to be constructed under this contract will be provided by the City.

B. The City will provide the appropriate rights of way and property for pipelines and structures. Upon approval by the Engineer, the Contractor may, without cost, use portions of any of the City's rights of way or property which may be suitable for working space and for storage of equipment and materials. The Contractor will be held responsible for any damage to structures, streets, and roads, and for any damage that may result from his use of City property.

C. In case areas additional to those available on the City's rights of way or property are required by the Contractor for his operations, he shall make arrangements with the property owners for the use of such additional areas at his own expense.

1.10 - Assignment of Antitrust Cause of Action.

The Contractor assigns to the City all rights, title, and interest in and to all causes of action it may have under Section 4 of the Clayton Act (15 U.S.C. Sec. 15) or under the Cartwright Act (Chapter 2 (commencing with Section 16700) of Part 2 of Division 7 of the Business and Professions Code), in connection with the Project, such assignment to be effective upon final payment to the Contractor without further acknowledgment by the parties.

1.11 - Signs.

Contractor shall post one (1) - 3’x 6’ (shown on Exhibit N), weather-proof sign at key locations. Said sign locations shall be selected by staff and shall change as the location of the work area changes.

Article 2 - Performance of Work

Contractor will at its own cost and expense furnish all necessary materials, labor, transportation, and equipment for doing and performing said work and the materials used shall comply with the requirements of the contract documents. All work shall be performed and completed as required in the contract documents under the direction and supervision, and subject to the approval of the Project Manager / Consulting Engineer, or his designated representative.

2.02 - No Assignment.

Contractor shall not assign the contract or his interest therein in whole or in part without the prior written consent of the City Council, which may be withheld in the City's sole discretion.

2.03 - Standard of Performance.

Contractor agrees that all services performed hereunder shall be provided in a manner commensurate with the highest professional standards and shall be performed by qualified and experienced personnel; that any work performed by him under the contract will be performed in the best manner; that any material furnished by him will be the best of its class; and that both work and materials will meet fully the requirements of these plans and specifications.

2.04 - Defective Work.

The Contractor shall remove and rebuild at his own expense any part of the work that has been improperly executed, even though it has been included in the monthly estimates. If he refuses or neglects to replace such defective work, prior to acceptance of the work, it may be replaced by the City at the expense of the Contractor, plus 15% for overhead expenses, and his sureties shall be liable therefore. (See Section 2.14 for curing defects after acceptance of the work).

2.05 - Communications Regarding the Work.

After award of the contract, all communications regarding the work covered by this Specification shall be addressed to the Project Manager / Consulting Engineer and mailed or hand delivered to:

City of Rolling Hills
2 Portuguese Bend Road
Rolling Hills, California 90274

2.06 - Independent Contractor.

The Contractor in the performance of the work hereunder will be acting in an independent capacity and not as an agent, employee, partner, or joint venture of the City.

2.07 - Emergency Work.

A. During Working Hours: In case of an emergency which threatens loss or injury of property, and/or safety of life during working hours, the Contractor shall act, without previous instructions from the City, as the situation may warrant. He shall notify the Engineer of the emergency and the action taken immediately thereafter. Any compensation claimed by the Contractor, together with substantiating documents in regard to expense, shall be submitted to the Engineer within 15 calendar days after the emergency. Compensation, if allowed, will be paid for as extra work.

B. Outside of Working Hours: Whenever in the opinion of the City there shall arise, outside of the regular working hours on the contract work, an emergency involving utility services to the public or danger to public safety, the City's forces, agents or public utility operators will handle such emergency work. If such emergency arises out of or is the result of operations by the Contractor, the cost of the corrective measures will be billed to the Contractor and deducted from his payment as provided in the contract documents. The performance of emergency work by City forces will not relieve the Contractor of any of his responsibilities, obligations, or liabilities under the contract.

2.08- Subcontractors.

A. Each subcontractor shall contain a reference to the contract between the City and the principal Contractor, and the terms of the contract and all parts thereof shall be made part of each subcontract insofar as applicable to the work covered thereby. Each subcontract shall provide for its annulment at the order of the Engineer, if, in his/her opinion, the subcontractor fails to comply with the requirements of the principal contract insofar as the same may be applicable to his work.

B. Nothing contained in this Specification shall be construed as creating any contractual relationship between any subcontractor and the City. The sections of this Specification are not intended to control the Contractor in dividing the work among subcontractors or to limit the work performed by any trade.

C. The Contractor shall be considered the employer of and as fully responsible to the City for the acts and omissions of subcontractors and of persons employed by them, as he is for the acts and omissions of persons directly employed by him.

D. The Contractor shall be responsible for the coordination of the trades, subcontractors, and material men engaged upon his work. It shall be his duty to see that all of his/her subcontractors commence their work at the proper time and carry it on with due diligence so that they do not delay or injure either the work or materials; and that all damage caused by them or their workmen is made good by them or by himself/herself at his/her expense.

E. The City will not undertake to settle differences between the Contractor and his subcontractors or between subcontractors.

F. The Contractor shall utilize the services of properly licensed specialty subcontractors, without additional expense to the City, on those parts of the work which are specified to be performed by specialty contractors.

2.09 - Use of Facilities Prior to Completion of Contract.

A. Whenever in the opinion of the Engineer any work under the contract, or any portion thereof, is in a condition suitable for use by the City, the City may, after written notice and designation from the Engineer to the Contractor, use (which includes, but is not limited to, taking over or placing into service) any portion or portions designated by the Engineer.

B. The use of any portion or portions by the City shall not be construed as, and will not constitute acceptance in any sense, of any portion of the work of the Contractor.

C. All necessary repairs, renewals, changes, or modifications in the work or any portion thereof so used, not due to ordinary wear and tear, but due to defective materials or workmanship, the operations of the Contractor, or any other cause, shall be made at the expense of the Contractor.

D. The use of any portion by the City shall not relieve the Contractor of any of his responsibilities or liabilities under the contract nor constitute a waiver by the City of any of the conditions thereof. Said use shall not cancel liquidated damages as of the first date of use, or any continuance thereof, nor impair, reduce, or change the amount of liquidated damages.

2.10 - Cooperation with other Work Forces.

A. The City reserves the right to perform other work at or near the site at any time by the use of its own forces or other contractors.

B. Other contractors, other utilities and public agencies or their contractors, other City contractors, and City personnel may be working in the vicinity during the project construction period. There may be some interference between these activities and the

work under this specification. The Contractor shall cooperate and coordinate his work with that of other work forces to assure timely contract completion.

2.11 - Agreements with Property Owners.

Agreements with property owners for spoiling excavated material, storing materials, or other purpose related to the work shall be made in writing and a copy submitted to the Engineer for his information.

2.12 - Protection of Property.

All public and private property, pavement or improvement shall be safely guarded from injury or loss in connection with this contract by the Contractor at all times. Should any facility, structure, or property be damaged during operations of the Contractor, he shall immediately notify the proper owners or authorities.

2.13- Contractor's Responsibilities for Losses or Liabilities.

A. Risk of Loss: Except as otherwise provided in the contract documents and except as to the cost of repair or restoration of damage to the work caused by an act of God as that term is defined in Section 7105(b) of the Public Contract Code of the State of California, the Contractor shall bear all losses resulting to him on account of the amount or character of the work, or from any unforeseen obstructions or difficulties which may be encountered, or from any encumbrances on the line of the work, or because the nature of the ground in or on which the work is done is different from what is assumed, or on account of the weather, or floods, or other causes.

B. Materials and Facilities: The Contractor shall be responsible for materials and facilities as hereinafter provided and in the event of his failure to carry out said responsibilities, the same may be carried out by the City at the expense of the Contractor:

1. The Contractor shall be responsible for any material furnished by him and for the care of all work until its completion and final acceptance, and he shall at his own expense replace damaged or lost material and repair damaged parts of the work.

2. The Contractor shall protect City facilities from damage resulting from his work. City facilities damaged by or as a result of the Contractor's work under this contract shall be repaired or replaced, as directed by the Engineer, at the Contractor's expense.

3. The Contractor shall remove from the vicinity of the completed work all buildings, rubbish, unused material, concrete forms, and other materials belonging to him or used under his direction during construction.

C. Laws and Regulations:

1. The Contractor shall keep himself fully informed of all laws, ordinances, and regulations in any manner affecting those engaged or employed on the work, or the materials used in the work, or in any way affecting the conduct of the work, and of all orders and decrees of bodies or tribunals having any jurisdiction or authority over the same. If any discrepancy or inconsistency should be discovered in this contract, or in the drawings or specifications herein referred to, in relation to any such law, ordinance, regulation, order, or decree, he shall forthwith report the same in writing to the Engineer.

2. He shall at all times himself observe and comply with, and shall cause all his agents and employees to observe and comply with all such applicable laws, ordinances, regulations, orders, and decrees in effect or which may become effective before completion of this contract.

3. Nothing in these drawings and/or specifications is to be construed to permit work not conforming to such laws, ordinances, and regulations. If the Contractor ascertains at any time that any requirement of this contract is at variance with such applicable law requirement, he shall promptly notify the Engineer.

4. If such applicable law requirement was not in effect on the date of submission of bids, any necessary adjustment of the contract price shall be made as provided in Article 5 of the General Conditions. If such applicable law requirement was in effect on said date of bid submission, no adjustment of contract price will be considered.

5. The Contractor, at his own expense, shall pay all taxes properly assessed against his equipment or property used or required in connection with the work.

2.14 - Guarantee of Work.

A. The Contractor guarantees all materials and workmanship against defects for a period of one year, unless noted otherwise, from the date of final acceptance of all work performed under the contract. The date of final acceptance will be as stated on the Notice of Acceptance.

B. The Contractor assumes responsibility for a similar one-year guarantee, unless noted otherwise, for all work and materials provided or performed by subcontractors, manufacturers, or suppliers.

C. The Contractor hereby agrees that if, within a period of one year, unless noted otherwise, after final acceptance of the work done under the contract, any portion of the work installed, constructed, or performed by him/her fails to fulfill any of the requirements

of the contract, he/she will, without delay and with the least practicable inconvenience and without further cost to the City, repair or replace defective or otherwise unsatisfactory work or materials. This agreement will not delay acceptance of the work or final payment.

D. Should the Contractor fail to act promptly in accordance with this requirement, or should the exigencies of the case require repairs or replacements to be made before the Contractor can be notified or can respond to notification, the City may at its option make the necessary repairs or replacements, or perform the necessary work, and the Contractor shall pay to the City the actual cost of such repairs plus 15 percent.

E. The Contractor shall be responsible for the full expense incidental to making good any and all of the above guarantees and agreements. The above guarantees and agreements are covenants, the performance of which shall be binding upon the Contractor and his sureties.

2.15 - Cleaning and Environmental Controls.

A. Maintain areas free of waste materials, debris, and rubbish. Maintain site in a clean and orderly condition.

B. Remove waste materials, debris and rubbish from site and dispose off-site legally. Recycling is encouraged. The Contractor should investigate opportunities for recycling.

C. Spoil sites shall not be located where spoil shall be washed back into a street gutter, storm drain, runoff conveyance or ocean.

D. Water containing mud, silt, or other pollutants from activities, shall not be allowed to enter the ocean or placed in locations that may be subject to storm runoff.

E. Any equipment or vehicles driven and/or operated within or adjacent to a street gutter, storm drain, runoff conveyance or ocean shall be checked and maintained daily to prevent leaks of materials that if introduced to water could be deleterious to aquatic life.

F. No debris, soil, silt, sand, bark, slash, sawdust, rubbish, cement or concrete or washings thereof, oil or petroleum products or other organic or earthen material from any construction, or associated activity or whatever nature shall be allowed to enter into or placed where it may be washed by rainfall or runoff into waters of the State. When operations are completed, any excess materials or debris shall be removed from the work area.

G. The Contractor shall comply with all litter and pollution laws. All Contractors, subcontractors and employees shall also obey these laws and it shall be the responsibility of the Contractor to ensure compliance.

Article 3 - Preliminary Provisions

3.01 Commencement, Prosecution, and Completion of Work

A. Notice to Proceed: The Contractor is not authorized to perform any work under this specification until he has received from the City an official notification to commence work. The date on which the notification is received by the Contractor is herein referred to as the Notice to Proceed. The Contractor shall commence work within ten (10) calendar days after Notice to Proceed. A copy of the Notice to Proceed is included in these specifications. The notification to commence work will not be issued until the contract is properly executed, bonds are furnished and approved, and insurance has been submitted and approved.

B. Prosecution of the Work: Work shall be continued at all times with such force and equipment as will be sufficient to complete it within the specified time. The Contractor expressly proposes that he has taken into consideration and made allowances for all ordinary delays and hindrances to the work to be performed and that he will complete the work within the specified time.

C. Required Contract Completion: Facility shall be made ready for service within the agreed upon working days submitted with Contractors bid and after the Notice to Proceed is issued.

3.02 - City's Discretion to Extend Time

In the event the work required hereunder is not satisfactorily completed in all parts and in compliance with the Contract Documents, City shall have the sole right, in its discretion, to increase the number of working days or not, as may seem best to serve the interest of the City.

3.03 - Delays and Extensions of Time for Contractor

A. The Contractor shall take reasonable precautions to foresee and prevent delays to the work. In the event of any delay to the work, the Contractor shall revise his/her sequence of operations, to the extent possible under the terms of the contract, to offset the delay.

B. If any delay to the work is caused by circumstances within the Contractor's control, it is not excusable and not compensable, and the Contractor will not be entitled to any extension of time or to any other compensation for damages resulting directly or indirectly there from.

C. If any delay having a direct effect on the work is caused by circumstances beyond the control of the Contractor except for causes of delay specified in Paragraph 3.03-D., such

delay may be excusable and may entitle the Contractor to an equivalent extension of time, but not to any other compensation. Excusable but not compensable causes include, but are not limited to, labor disputes, weather conditions unfavorable for prosecution of the work, and acts of God.

D. If any delay having a direct effect on the work is caused by failure of the City to provide information as specified, or necessary instructions for carrying on the work, or to provide the necessary right of way or site for installation, or failure of a utility to remove or relocate an existing facility such delay may be compensable and may entitle the Contractor to an equivalent extension of time; and may entitle the Contractor to compensation for damages resulting directly from any of the causes of delay specified in this paragraph.

E. The Contractor shall notify the Engineer in writing of any delay having a direct effect on the work and the causes thereof within 15 days from the beginning of such delay.

F. Any claim for an extension of time or for compensation for damages resulting from delay shall be made in writing to the Engineer not more than 30 days after the ending of such delay. The Contractor shall provide data showing the effect of the delay on the specified completion of the work, that they delay was beyond the control of the Contractor, and that the Contractor has revised his construction schedule, to the extent possible, to offset the delay. No extension of time or compensation for damages resulting from delay will be granted unless the delay affects the timely completion of all work under the contract or the timely completion of a portion of the work for which a time of completion is specified.

G. The Engineer will investigate the facts and ascertain the extent of the delay, and his findings thereon shall be final and conclusive, except in the case of gross error. In the event of a gross error, the Engineer may reconsider his findings and thereafter his findings shall be final and conclusive.

H. Failure of the Contractor to give written notice of a delay, or to submit or document a claim for an extension of time or for damages resulting from delay in the manner and within the times stated above shall constitute a waiver of all claims thereto.

I. When a Contractor experiences two concurrent delays, one compensable and the other excusable, no compensation other than an extension of time will be allowed. J. An extension of time must be approved by the Engineer to be effective, but an extension of time whether with or without consent of the sureties, shall not release the sureties from their obligations, which shall remain in full force until the discharge of the contract.

3.04 - Climatic Conditions

A. The Engineer may suspend the work whenever weather conditions or conditions resulting from inclement weather are unfavorable for the prosecution of the work. The delay caused by such suspension may entitle the Contractor to an extension of time but not to any other compensation.

B. If the Contractor believes that work should be suspended under this Section 3.04, he may request such suspension. The delay caused by such suspension may entitle the Contractor to an extension of time but not to any other compensation.

C. No extension of time will be granted for suspension of work unless the suspension affects the timely completion of all work under the contract or the timely completion of a portion of the work for which a time of completion is specified. Determination that the suspension for inclement weather conditions or conditions resulting from inclement weather affects timely completion and entitles the Contractor to an extension of time shall be made and agreed to in writing by the Engineer and the Contractor on each day that work is suspended. In the event of failure to agree, the Contractor may protest under the provisions of Section 7.07.

D. If the work is suspended and an extension of time is granted under this Section 3.04 the Contractor will be entitled to a one day extension of time for each day that he is unable to work at least one-half of his current normal work day; and if the work is suspended at the regular starting time on any work day and the Contractor's workforce is dismissed as a result thereof, then he will be entitled to a one day extension of time whether or not conditions change thereafter and the major portion of the day is suitable for work.

3.05 - Safety Hazard

The Engineer may suspend operations if he determines that an imminent safety hazard exists.

3.06 - Liquidated Damages

A. The deductions for liquidated damages shall be $1000/day from date of required contract completion until actual contract completion date.

B. The above liquidated damages are necessary to ensure timely completion and to defray costs of additional construction inspection and contract administration. Timely completion is required to insure that the owner may occupy the building fully, all facilities operational and all construction activities completed in accordance with these specifications.

C. Should the Contractor fail to complete all or any portion of the work within the specified time therefore in Section 3.01, or within such extra time as may be allowed for delays by

formal extensions granted by the City, deductions as set forth above will be made from the Contractor's earning for the time that the work remains incomplete after the time set for its completion.

D. It being impracticable or extremely difficult to fix the actual damage, the amount set forth above is hereby agreed upon as liquidated damages and will be deducted from any money due the Contractor under this contract. Should the amount of the damages exceed the amount due the Contractor, he and his sureties shall be liable for the excess.

Article 4 - Construction Progress Schedules

4.01 - Initial Schedule

A. Within 24 hours after the Notice to Proceed has been given, and prior to the start of any work, the Contractor shall submit to the Project Manager / Consulting Engineer for approval six (6) copies of its proposed construction schedule with subschedules of related activity. If the Engineer notifies the Contractor that the schedule is unacceptable, the Contractor shall submit a revised schedule within 5 working days thereafter.

B. The construction schedule shall be in the form of bar charts with major activities of the project listed in chronological order showing the dates for beginning and completion of each activity.

C. The construction schedule shall also contain:

1. An economic component showing the cost of each activity, the anticipated monthly earnings and a cash flow diagram.

2. A products availability schedule, which shall show the availability dates for contractor furnished equipment affecting the progress of the work, indicate the required delivery dates for City furnished materials and equipment and indicate the required installation date for utility-furnished equipment.

4.02 Revised Schedules

A. After start of the work, the Contractor shall submit revised construction schedules not later than the 1st and 15th day of each month thereafter until completion of the contract.

B. The revised schedules should show any significant changes in activities since submission of the previous schedule with revised projections of progress and completion. It should also provide a narrative report of problem areas, anticipated delays and the impact on the schedule, corrective action recommended and its effect, and the effect of changes on schedules of other contractors involved with the work.

Article 5 - Suspension or Termination of Contract

5.01 - Suspension of Work-Default by Contractor

A. If the Contractor fails to begin the delivery of the material or to commence work as provided in the contract, or fails to make delivery of material promptly as ordered, or to maintain the rate of delivery of material or progress as ordered, or to maintain the rate of delivery of material or progress of the work in such a manner as in the opinion of the Engineer will ensure a full compliance with the contract within the time limit, or fails to timely pay subcontractors or suppliers, or if in the opinion of the Engineer the Contractor is not carrying out the provisions of the contract in their true intent and meaning, written notice will be served on him to provide within a specified time for a satisfactory compliance with the contract. If he neglects or refuses to comply with such notice, the City may suspend the operation of all or any part of the contract, or it may in its discretion after such notice perform any part of the work or purchase any or all of the material included in the contract or required for the completion thereof at the expense of the Contractor without suspending the contract.

B. Upon suspension of the contract, the Engineer, acting in behalf of the City, may in his discretion take possession of all or any part of the machinery, tools, appliances, materials, and supplies that have been delivered by or on account of the Contractor for use in connection therewith and the same may be used either directly by the City or by other parties for it in the completion of the work suspended; in which case the Contractor shall be credited with a reasonable rental therefor, to be determined by the Engineer; or the City may employ other machinery or materials, purchase the material contracted for in such manner as it may deem proper, or hire such force and buy machinery, tools, appliances, materials, and supplies at the Contractor's expense as may be necessary for the proper conduct and completion of the work. The Contractor shall not make any disposition of the plant, machinery, tools, appliances, supplies, or materials used on or in connection with the work, either by sale or conveyance, inconsistent with these provisions. The Contractor shall comply with any written order of the Engineer to re-commence the work.

5.02 - Suspension of Work-Contract without Fault

The work may be suspended in whole or in part when determined by the Project Manager / Consulting Engineer that such suspension is necessary in the best interest of the City, regardless of fault by the Contractor. In such event, the Contractor shall comply immediately with any written order of the Engineer suspending the work and shall comply with any written order of the Engineer re-commencing the work.

5.03 - Decision of Engineer Final

The determination of the Project Manager / Consulting Engineer to suspend the work under the provisions of either section 5.01 or 5.02 shall be final and binding upon both parties.

5.04 - Remainder of Contract in Effect

Suspension of the contract, or any part thereof, shall operate only to terminate the right of the Contractor to proceed with the work covered by the contract or the suspended portion thereof. The provisions of the contract permitting the City to make changes and to make proper adjustment of accounts to cover any increase or decrease of cost on account of such changes and all other provisions of the contract except those giving the Contractor the right to proceed with work on the items covered by the suspension, shall be and remain in full force and effect after such suspension and until the contract shall have been completed and final payment or final adjustment or accounts made.

5.05 - Allocation of Cost

A. Contractor at fault: When the work is suspended in whole or in part in accordance with the provisions of section 5.01 any cost to the City in excess of the contract price, arising from the suspension of the work, or from work performed or purchase made by the City, either before or after suspension, and required on account or failure of the Contractor to comply with his/her contract or the orders of the Engineer issued in pursuance thereof, will be charged to the Contractor and his/her sureties, who shall be liable therefor. If the net credits shall be in excess of the claims of the City against the Contractor, the balance will be paid to the Contractor or his legal representative.

B. Contractor without Fault:

1. Where the work is suspended in whole or in part in accordance with the provisions of section 5.02, the Contractor will be compensated for damages incurred due to delays for which the City is responsible if such delays are unreasonable in the circumstances involved and were not within the contemplation of the parties when the contract was awarded to the Contractor. Such actual costs will be determined by the Engineer. The City will not be liable for, and in making this determination the Engineer will exclude, all damages which the Engineer determines the Contractor could have avoided by and reasonable means including, without limitation, the judicious handling of forces, equipment, or plant.

2. If the Contractor desires payment for such a delay it shall, within 30 days after the beginning of the delay, file with the City a written request and report as to the cause and extent of the delay. The request for payment or extension must be made at least

15 days before the specified completion date. Failure by the Contractor to file these items within the times specified will be considered grounds for refusal by the City to consider such request.

5.06 - Termination of Contract-Default by Contractor

A. The City may terminate the Contractor's performance under the Contract and declare the Contractor in default for any breach of the Contract, which shall include, by way of example and not by limitation: (1) the Contractor fails to begin the delivery of the material or to commence work as provided in the contract; (2) the Contractor fails to make or maintain the rate of delivery of material or progress of work promptly as ordered or required under the contract, or to maintain the rate of delivery of material or progress of the work in such a manner as in the opinion of the Engineer will ensure full compliance with the contract within the time limit; (3) the Contractor fails to make prompt payment to subcontractors, materialmen, laborers or suppliers; (4) the Contractor fails to execute or prosecute the Work properly, or in the manner or location specified in the Contract, or fails to complete the Work entirely on or before any date established for partial or final completion, or fails to maintain a work program or schedule as to ensure the City's interest; (5) if there shall be filed by or against the Contractor in any court a petition in bankruptcy or insolvency or for reorganization or for the appointment of a receiver or trustee of all or a portion of the Contractor's property, and within thirty days therefrom the Contractor fails to secure a discharge thereof; (6) the Contractor makes an assignment for the benefit of creditors or petitions for or enters into an agreement or arrangement with its creditors; (7) the Contractor fails to perform the work in accordance with the contract documents (including without limitation, the failure to supply suitable materials and equipment, or sufficiently skilled workers and a sufficient number thereof, to perform the work in accordance with the contract documents); (8) the Contractor disregards any applicable law, rule, regulation, order or directive; (9) if, in the reasonable opinion of the Engineer, the Contractor is not complying in good faith with any term or condition of the contract or any order from the City.

B. In the event of such termination, the Contractor will be paid the actual amount due based on unit prices or lump sums bid and the quantity of work completed at the time of cancellation, less damages caused to the City by acts of the Contractor causing the cancellation. The Contractor, in having tendered a Bid, shall be deemed to have waived any and all claims for damages because of cancellation of Contract for any such reason.

C. The procedures for declaring the Contractor in default are as follows. The City shall first serve written notice upon the Contractor, demanding full compliance with the Contract within 5 days after receipt of such notice. The surety on the faithful performance bond may be provided with a copy of such notice. If the Contractor does not comply with such notice within 5 days after receiving it, or if, after starting to comply, the Contractor fails to prosecute the work or otherwise comply with such notice promptly and in good faith, the

City may declare Contractor in default, and such default shall be effective immediately upon Contractor's receipt of written notice of default from the City. A copy of such notice of default shall be provided to the surety.

D. In the event that Contractor is served with notice of default, the City may, immediately upon Contractor's receipt of such notice, exclude it from the premises and take possession of all material and equipment, and complete the Work by City forces, by letting the unfinished work to another Contractor, or by a combination of such methods. In any event, the cost of completing the work shall be charged against the Contractor and its Surety and may be deducted from any money due or becoming due from the City. If the sums under the Contract are insufficient for completion, the Contractor or Surety shall pay to the City within five (5) days after the completion all costs in excess of the Contract Price.

E. If the Surety assumes any part of the work, it shall take the Contractor's place in all respects for that part and shall be paid by the City for all work performed by it in accordance with the Contract. If the Surety assumes the entire Contract, all money due the Contractor at the time of its default shall be payable to the Surety as the work progresses, subject to the terms of the Contract.

F. The provisions of this section shall be in addition to all other rights and remedies available to the City under law.

5.07 - Termination of Contract - Contractor without Fault

A. The City may terminate the Contract when conditions encountered during the work make it impossible or impracticable to proceed, or when the City is prevented from proceeding with the Contract by act of God, as defined in section 4151(b) of the State Government Code, by law, or by official action of a public authority.

B. When written notice by the Engineer to discontinue work is served upon the Contractor because the Contract has been terminated as provided in subsection A above; the Contractor shall comply immediately with the order of the Engineer.

C. The Contractor shall be paid for work performed to the time of termination at the unit prices named in the contract, or in the event no unit prices are named, a sum equal to that portion of the lump sum price which the work completed to the time of termination bears to the total work to be performed under the contract as determined by the Engineer. In no event will the City be liable to the Contractor for breach of contract, extra work, or damages because of said termination of contract.

Article 6 - Changes

6.01 - Changes Initiated by City

The City reserves the right to make such alterations, deviations, additions to or deletions from the plans and specifications, including the right to increase or decrease the quantity of any item or portion of work or to omit any item or portion of the work, and to require such changes in the work as are determined by the Project Manager / Consulting Engineer to be necessary or advisable for proper completion or construction of the whole work contemplated.

6.02 - Changes at the Contractor's Request

If the Contractor, on account of conditions developing during the progress of the work, finds it impracticable to comply strictly with the plans and specifications and applies in writing for a modification of requirements or of methods of work, such change may be authorized by the Engineer, if not detrimental to the work and if without additional cost to the City.

6.03 - Change Orders - Procedure

A. Engineer's Adjustment of Contract Terms: Changes will be set forth in a contract change order. If the work to be done or change to be made causes an increase or decrease in the Contractor's cost of performance of the contract, an equitable adjustment may be made as determined by the Engineer. The contract change order will specify the payment to be made or credit to be taken and adjustment of the contract time, if any. Payment in accordance with the terms and conditions set forth in a contract change order shall constitute full compensation for all work included therein or required thereby.

B. Contractor's Agreement: Contractor shall proceed with the ordered work, unless another starting date is specified. If the Contractor agrees with the terms and conditions of the contract change order, he shall indicate his acceptance by signing the original copy and returning it to the Engineer within 3 days. If the Contractor disagrees with the terms and conditions of such contract change order, he shall proceed with the ordered work and shall submit a written protest in accordance with "E. Protest Procedure."

C. Submittal of Contractor's Proposal of Changes: Prior to issuing an approved contract change order, the Engineer may request that the Contractor submit a proposal covering the changes. The request will include a description of the work or revised drawings or specifications reflecting changes proposed to be ordered. Within 3 days after receiving the request the Contractor shall submit his proposal to the Engineer, including any claim for extension of time and any and all compensation which may be necessary as a result of performing the changes. If the Engineer decides not to issue a contract change order

after requesting a proposal from the Contractor, the Contractor will be notified of such decision in writing.

D. Issuance of Engineer's Order: The Engineer may, in writing, order the Contractor to proceed with the work prior to receipt of an approved contract change order therefor. In such case, the Engineer will as soon as practicable issue an approved contract change order for the work and the provisions "E. Protest Procedure" shall be fully applicable to such subsequently issued contract change order. The Contractor shall keep full and complete records of the cost of the ordered work until the method of compensation is determined and the approved change order is received, and shall permit the Engineer to have access to such records. An approved change order shall supersede any previously issued written order covering the same work.

E. Protest Procedure:

1. Should the Contractor disagree with any terms or conditions set forth in an approved change order which he has not executed, he shall submit a written protest to the Engineer within 3 days after the receipt of such approved contract change order. The protest shall state the points of disagreement, contract references, quantities, and costs involved. The Engineer shall consider and investigate such protest within a reasonable time and his decision thereon shall be conclusive and binding against both parties to the contract, except in the case of gross error. If a written protest is not submitted, adjustment of the contract time and payment will be made as set forth in the approved contract change order and shall constitute full compensation for all work included therein or required thereby. An unprotested approved change order will be considered as an executed contract change order.

2. When the protest concerning an approved contract change order relates to compensation, the Contractor shall keep full and complete records of the cost of such work and shall permit the Engineer to have such access thereto as may be necessary to assist in the determination of the compensation payable for such work.

3. When the protest concerning an approved contract change order relates to the adjustment of contract time for the completion of the work, the time to be allowed therefor will be determined as provided in Section 3.03.

F. Extra Work:

1. Work not covered by any of the items of the bidding form for which there are bid prices or by any combination of such items, as determined by the Engineer, and work specifically designated as extra work in the drawings or specifications is extra work. The Contractor shall furnish the required labor, material, and equipment and shall perform such extra work upon receipt of a contract change order therefor. All labor, material, and equipment shall be subject to approval of the Engineer.

2. Extra work will be paid for by an adjustment of the contract price or on a force-account basis as provided in Section 7.06, or a combination of both, as determined by the Engineer. Extra work will not be paid for unless ordered in writing by the Engineer. The determination of the Engineer on all questions relating to extra work shall be conclusive and binding against both parties to the contract except in the case of gross error.

Article 7 - Contract Payments and Claims

7.01 - General

A. Payment will be made at the price for each item listed on the bidding form as extra work as provided in the General Conditions.

B. Initial progress payment will not be made prior to approval by the Engineer of the Schedule of Costs, the Construction Progress Schedule, and the Schedule of Submittals.

C. No subsequent progress payment will be made prior to receipt by the Engineer of the monthly revision of the Construction Progress Schedule.

7.02 - Schedule of Costs for Payments

A. The Contractor shall submit to the Engineer, within ten (10) working days after Notice to Proceed, six (6) copies of a Schedule of Costs. The Schedule of Costs shall be a detailed breakdown of quantities and prices of work and materials required to perform and complete the contract.

B. The total of the price breakdown shall agree with the lump-sum price bid. The price breakdown shall, as a minimum, show the cost of each item of the Construction Progress Schedule, Article 4. Any additional breakdown of the Schedule of Costs, by quantities and prices of work and materials, considered necessary by the Engineer will be as determined by the Engineer. The price breakdown shall not be unbalanced, shall be subject to adjustment between the Engineer and the Contractor, and will be used as a basis for progress payments.

C. Acceptance of the Schedule of Costs by the Engineer shall not relieve the Contractor of the responsibility of performing all the work needed to complete the projects at the lump-sum price bid.

7.03 Progress Payments

A. Determination by Engineer: The Engineer will make an approximate measurement of all approved materials delivered to the job site and work performed by the Contractor through the last working day of each calendar month for the purpose of making a progress payment. No payment will be made for the fabrication or production of materials off the job site, or for materials stored off the job site. The Engineer will classify the work according to items listed on the Bidding Form and will estimate the value thereof and the basis of prices shown, or as extra work. The classification of the work

performed and the value thereof will be based on the Schedule of Costs submitted by the Contractor.

B. Five Percent Retention: From the amount thus determined, five percent thereof will be deducted as retention by the City for performance security. The amount of all payments previously made to the Contractor and any amounts due to the City from the Contractor for supplies, materials, services, damages, or otherwise deductible under the terms of the contract will be deducted from the remainder. The remaining amount will be paid as a progress payment by the City to the Contractor thirty (30) days from the date that the undisputed invoice is received.

C. Additional Retention: In addition to the retention under Paragraph B above, the whole or part of any payment of the estimated amount due the Contractor may be withheld as an additional retention if such course be deemed necessary to protect the City from loss due to the Contractor's failure to protect any of the following: (1) meet his obligations; (2) expedite the work; (3) correct rejected work; (4) settle damages as provided; or (5) produce substantial evidence that no claims will or have been filed, and/or if it has been determined that unpaid balance may be insufficient to complete the work.

D. Effect of Progress Payment: All material and work covered by progress payments thereupon become the sole property of the City, but this provision shall not be construed as relieving the Contractor from sole responsibility for all materials and work upon which payments have been made or the restoration of any damaged work as a waiver of the City's right to require fulfillment of all of the contract terms.

E. Contractor Retention Escrow Accounts: Contractor may, at it’s own expense, elect to have the said five percent retention paid to a qualified escrow agent, pursuant to Public Contracts Code § 22300, and any escrow agreement shall conform to the requirements of that section and be approved by the City. City approval process includes approval by the City Attorney, the City Council and the City Financial Services Department. Said City approval could take up to 120 calendar days.

7.04 - Final Payment and Release of Claims

A. Notice of Acceptance and final payment: Upon completion of the work as determined by the Engineer, a Notice of Acceptance will be issued, and a Notice of Completion will be recorded with the County. The City will pay to the Contractor 35 days after issuing the Notice of Acceptance, or as soon thereafter as practicable, the remaining amount due the Contractor, less all prior payments and advances whatsoever to or for the account of the Contractor for supplies, materials, services, damages, or otherwise deductible under the terms of the contract. All prior estimates and payments including those relating to extra work shall be subject to correction by this payment, which throughout this contract

is called "final payment." A copy of the Notice of Acceptance is included in these specifications.

B. Release of Claims: Neither the final payment nor any part of the retained percentage shall become due until the Contractor shall have delivered to the City a complete release of all claims against the City arising under and by virtue of this contract and related to undisputed amounts, including claims of subcontractors and suppliers of either materials or labor. If disputed contract claims in stated amounts are unresolved 35 days after issuing the Notice of Acceptance, a progress payment of undisputed amounts and retained funds will be made by the City upon receipt of a release specifically excluding the disputed contract claims. Upon resolution of disputed claims, the Contractor shall execute a supplemental release and, upon delivery, the City will make final payment. A copy of the release form is included in these specifications.

C. Acceptance of final payment constitutes release: The acceptance of the final payment by the Contractor shall be and shall operate as a release to the City of all claims and of all liability to the Contractor for all things done or furnished in connection with the work and for every act and neglect of the City and others relating to or arising out of this work. No payments, however, final or otherwise, shall operate to release the Contractor or his sureties from any obligation under this contract or the bonds for payment and for faithful performance.

7.05 - Force-Account Payment

A. Computation of Payment: When work is to be paid for on a force-account basis, the Contractor will be paid the costs of labor, materials, and equipment as provided in Paragraphs 7.05.B, 7.05.C and 7.05.D, except when agreement has been reached to pay in accordance with Paragraph 7.05.E. To the total of the costs computed as provided in Paragraphs 7.05.B, 7.05.C and 7.05.D, there will be added a markup of 20 percent to the cost of labor, 15 percent to the cost of materials, and 15 percent to the equipment rental. These markups shall constitute full compensation for profit and for all overhead costs which include superintendence, bond and insurance premiums, and all other items of expense not specifically designated as cost or equipment rental in Paragraphs 7.05.B, 7.05.C and 7.05.D. The total payment made as provided above shall constitute full compensation for work performed on a force-account basis.

   It is understood that labor, materials and equipment may be furnished by the Contractor or by a subcontractor or by others on behalf of the Contractor. When work paid for on a force-account basis is performed by forces other than the Contractor's organization, the Contractor shall reach agreement with such other forces as to the distribution of the payment made by the City for such work and no additional payment therefor will be made by the City.

B. Labor: The cost of labor used in performing the work, whether the employer is the Contractor, subcontractor, or other forces, will be the sum of the following:

1. Actual Wages. Actual wages paid to other workers, including foremen devoting their exclusive attention to the work in question. The actual wages shall include payments to, or on behalf of, workers for health and welfare, pension, vacation, and similar purposes.

2. Labor Surcharge. To the actual wages, as defined in Paragraph 7.05.B.1 above, will be added 27 percent which percentage shall constitute full compensation for all payments imposed by state and federal laws, and for all other payments made to, or on behalf of, the workers, other than actual wages as defined in Paragraph 7.05.B.1 above and the amount paid for travel and subsistence as specified in Paragraph 7.05.B.3 following.

3. Travel and Subsistence. The amount paid to the workers for travel and subsistence as defined in applicable collective bargaining agreements filed with the Department of Industrial Relations under the provisions of Section 1773.8 of the Labor Code.

C. Materials: Only materials incorporated in the work will be paid for, the cost of which will be the cost to the purchaser, whether Contractor, subcontractor, or other forces, from the supplier thereof, except as the following are applicable:

1. If a cash or trade discount by the actual supplier is offered or available to the purchaser, it shall be credited to the City notwithstanding the fact that such discount may not have been taken.

2. If materials are procured by the purchaser by any method which is not a direct purchase from a direct billing by the actual supplier to such purchaser, the cost of such materials shall be deemed to be the price paid to the actual supplier as determined by the Engineer. No markup except for costs incurred in the handling of such materials will be permitted.

3. If the materials are obtained from a supply or source owned wholly or in part by the purchaser, payment therefor will not exceed the price paid by the purchaser for similar materials furnished from said source on contract items or the current wholesale price for such materials delivered on the job site, whichever price is lower.

4. If the cost of such materials is excessive, in the opinion of the Engineer, then the cost of such materials shall be deemed to be the lowest current wholesale price at which such materials are available in the quantities concerned delivered to the job site, less any discounts as provided in Paragraph 7.05.C.1 above.

5. If the Contractor does not furnish satisfactory evidence of the cost of such materials from the actual supplier thereof, the cost shall then be determined as provided in Paragraph 7.05.C.4 above. The City reserves the right to furnish such materials as it deems advisable, and the Contractor shall have no claims for costs and profit on such materials.

D. Equipment: The Contractor will be paid for the use of equipment at the rental rates established as provided in Paragraph 7.05.D.1 and 7.05.D.2 below, which rates shall include the cost of fuel, oil, lubrication, supplies, small tools, necessary attachments, repairs and maintenance of any kind, depreciation, storage, insurance, and all incidentals. Operators of rented equipment will be paid for as provided in Paragraph 7.05.B above. All rented equipment shall, as determined by the Engineer, be in good working condition for the purpose for which it is to be used. Unless otherwise specified, manufacturers' ratings shall be used to classify equipment for the determination of applicable rental rates.

1. Equipment on the work: For the use of any equipment normally required for the contract regardless of whether the equipment is already on the work or is to be delivered to the work and regardless of ownership and any rental or other agreement entered into by the Contractor for the use of such equipment, the Contractor will be paid as provided herein at the current local rental rates used by the State of California. (Copies of the Equipment Rental Rates used by the State will be furnished on request.) Individual pieces of equipment not listed and having a replacement value of Two Hundred Dollars ($200) or less shall be considered to be tools or small equipment and no payment will be made for their use on the work. The hourly rates for equipment not listed under the schedules of rental rates set forth by the State of California shall be those agreed upon by the Contractor and the Engineer prior to the use of the equipment, except that in no case shall the rental rates exceed those of established distributors or equipment rental agencies. In computing the hourly rental of equipment, less than 30 minutes shall be considered 1/2 hour, except that the minimum rental time to be paid per day shall be one hour. Rental time will not be allowed while equipment is inoperative due to breakdowns or non-working days. The rental time of equipment to be paid for shall be the time the equipment is in operation on the force-account work being performed. Loading and transporting costs will be allowed when the equipment is moved by means other than its own power, except that no payment will be made if the equipment is used at the site of the force-account work on other than the force-account work.

2. Equipment not on the work: For the use of equipment not required under the contract and moved in on the work and used exclusively for force- account work, the Contractor will be paid as provided herein and at the rates agreed upon by the Contractor and the Engineer, except that in no case shall the rental rates paid exceed those of established distributors or equipment rental agencies. The rental

period shall begin at the time the equipment is unloaded at the site of the force-account work and shall terminate at the end of the day on which the order to discontinue the force-account work is given to the Contractor by the Engineer, except that the minimum total rental time to be paid for shall be not less than eight hours. Except as provided in the last sentence of this paragraph, the Contractor will be paid the cost of transporting the equipment to the work and its return to its original location, provided the original location of the equipment has been agreed to in advance by the Engineer, and provided further that such costs shall not exceed the applicable minimum Public Utility Commission's established rates for transporting the equipment. Should the equipment be transported by low bed trailers, hourly rates charged by established haulers will be paid. Also, the City will pay for loading and unloading costs. Should the Contractor desire the return of the equipment to a location other than its original location, the City will pay the cost of transportation in accordance with the above provisions, provided such costs does not exceed the cost of moving the equipment to the work. Payment for transporting and loading and unloading the equipment as provided herein will not be made if the equipment is used on the work in any other way than upon the force- account work.

E. Work Performed by Special Forces or Other Special Services: When the Engineer and the Contractor, by agreement, determine that a special service or an item of force-account work cannot be performed by the forces of the Contractor or those of any of his subcontractors, such service or force-account work item may be performed by a specialist. Invoices of such services or item or force-account work on the basis of the current market prices thereof may be accepted without complete itemization of labor, material, and equipment rental costs when it is impracticable and not in accordance with the established practice of the special service industry to provide such complete itemization. In those instances wherein the Contractor is required to perform force-account work necessitating a fabrication or machining process in a fabrication or machine shop facility away from the job site, the charges for that portion of force-account work performed in such facility may, by agreement, be accepted as a specialist billing. To the specialist invoice price, less credit to the City for any cash or trade discount offered or available, whether or not such discount may have been taken, will be added 15 percent in lieu of the percentages provided in Paragraph 7.05.A above.

F. Reporting and Invoicing: All force-account work shall be reported daily upon Daily Cost of Extra Work Sheets furnished by the Engineer to the Contractor and signed by both parties, which daily reports shall thereafter be considered the true record of force-account work done. Complete detailed invoices covering the force-account work shall be submitted for payment no later than 15 days after the completion of the work. Those not so detailed will not be processed for payment until details are furnished. The charges for work performed by the Contractor, by a subcontractor, and by an employee of a subcontractor shall be reported separately. Substantiating invoices from suppliers, vendors, and subcontractors shall be included with the Contractor's invoices. The

Contractor shall permit examination of accounts, bills, and vouchers relating to the force-account work, when requested by the Engineer.

7.06 - Claims and Protests-Contract Requirements

A. Written Protest: If work demanded of the Contractor is considered by him to be outside the requirements of the contract, or if he considers any decision of the Engineer to be unfair, he shall, upon such work being demanded or such decision being made, proceed without delay to perform the work or conform to the decision, and shall give written notice of protest to the Engineer within 48 hours. The written notice shall include the date and circumstances of the order or decision and his objections thereto. The Engineer will consider and investigate the protest and his/her decision thereon shall be final and conclusive, except in the case of gross error. In the event of a gross error, the Engineer may reconsider his/her findings and thereafter his/her findings shall be final and conclusive. Except for such protests as are made of record in the manner specified, the Contractor waives all grounds for protest to such orders or decisions of the Engineer.

B. Written Claim: No more than 30 days after submitting a protest in accordance with 7.07.A. above or 30 days after completing the protested work, if that is later, the Contractor shall submit to the Engineer his/her claim concerning the matter so noticed. The claim shall set forth clearly concerning the matter so noticed. The claim shall set forth clearly and in detail, for each item of additional compensation or time adjustment claimed, the reasons for the claim, the references to applicable provisions of the specifications, the nature and amount of cost or time involved, or both, the computations used in determining such cost or time, or both, and all other pertinent factual data. The Contractor shall furnish such clarification and further available information and data may be requested in writing by the Engineer within the time specified in such request. In addition, he/she shall maintain complete and accurate daily records of the costs of any portion of the work for which additional compensation is claimed, and shall give the Engineer access thereto or certified copies thereof as requested. Any order or decisions of the Engineer as to which the Contractor has submitted a protest shall be final and conclusive on the Contractor if he fails to submit or document a claim with respect thereto in the manner and within the times above stated, and such failure shall constitute a waiver of all claims in connection therewith, whether direct, indirect, or consequential in nature.

C. Written Decision: After reviewing the written claim submitted by the Contractor and any additional information furnished by the Contractor and after considering the facts of the matter, the Engineer will give the Contractor written notice of the Engineer's final determination regarding the claim.

Article 8 - Materials

8.01 - General

A. The Contractor shall furnish all materials needed to complete the work and installations required under the terms of this contract, except those materials specified to be furnished by the City.

B. The Contractor shall submit satisfactory evidence of compliance with the specifications of such materials to be furnished and used in the work as the Engineer may require. Materials incorporated in the work and not specifically covered in the specifications shall be the best of their kind. Unless otherwise specified, all materials and equipment incorporated in the work under the contract shall be new.

8.02 - Quality and Workmanship

All materials must be of the specified quality and equal to approved samples, if samples have been required. All work shall be done and completed in a thorough, workmanlike manner, notwithstanding any omission from the specifications or the drawings, and it shall be the duty of the Contractor to call attention to apparent errors or omissions and request instructions before proceeding with the work. The Engineer may, by appropriate instructions, correct errors and supply omissions, which instructions shall be binding upon the Contractor as though contained in the original specifications or drawings. All work performed under this Specification will be inspected by the Engineer as provided in Paragraph 8.04. All work performed within City or County street or State of California freeway rights of way shall meet the requirements of the agency having jurisdiction. All materials furnished and all work done must be satisfactory to the Engineer. Work, material, or equipment not in accordance with this Specification, in the opinion of the Engineer shall be made to conform thereto. Unsatisfactory material and equipment will be rejected, and if so ordered by the Engineer, shall, at the Contractor's expense, be immediately removed from the vicinity of the work.

8.03 - Trade Names and "Or Approved Equal" Provision

Whenever in the specifications or in the drawings the name or brand of a manufactured article is used, it is intended to indicate a measure of quality and utility or a standard. Except in those instances where the product is designated to match others in use on a particular improvement either completed or in the course of completion, the Contractor may substitute any other brand or manufacture of equal quality and utility on approval of the Engineer, provided the use of such brand or manufacture involves no additional cost to the City.

8.04 - Approval of Materials

A. The Contractor shall furnish without additional cost to the City such quantities of construction materials as may be required by the Engineer for test purposes. He shall place at the Engineer's disposal all available facilities for and cooperate with him in the sampling and testing of all materials and workmanship. The Contractor shall prepay all shipping charges on samples. No samples are to be submitted with the bids unless otherwise specified.

B. Each sample submitted shall be labeled. A letter, in duplicate, submitting each shipment of samples shall be mailed to the Engineer by the Contractor. Both the labels on the sample and the letter of transmittal shall indicate the material represented, its place of origin, the names of the producer and the Contractor, the Specification number and title, and a reference to the applicable drawings and specification paragraphs.

C. Materials or equipment of which samples are required shall not be used on the work until approval has been given by the Engineer in writing. Approval of any sample shall be only for the characteristics of for the uses named in such approval and no other. No approval of a sample shall be taken in itself to change or modify any contract requirement.

D. Failure of any material to pass the specified tests will be sufficient cause for refusal to consider under this contract any further sample of the same brand or make of that material.

8.05 - Ordering Materials

One copy of each of the Contractor's purchase orders for materials forming a portion of the work must be furnished to the Engineer, if requested. Each such purchase order shall contain a statement that the materials included in the order are subject to inspection by the City. Materials purchased locally will be inspected at the point of manufacture or supply, and materials supplied from points outside the Los Angeles area will be inspected upon arrival at the job, except when other inspection requirements are provided for specific materials in other sections of this Specification.

8.06 - Authority of the Engineer

On all questions concerning the acceptability of material or machinery, the classification of material, the execution of the work, and conflicting interests of contractors performing related work, the decision of the Engineer shall be final and binding on both parties, except in the case of gross error. The Engineer will make periodic observations of materials and completed work to observe their compliance with plans, specifications, and design and planning concepts, but he is not responsible for the superintendence of

construction processes, site conditions, operations, equipment, personnel, or the maintenance of a safe place to work or any safety in, on, or about the site of work.

8.07 - Inspection

A. All materials furnished and work done under this contract will be subject to rigid inspection. The Contractor shall furnish, without extra charge, the necessary test pieces and samples, including facilities and labor for obtaining them, as requested by the Engineer. The Engineer, or his authorized agent or agents, at all times shall have access to all parts of the shop and the works where such material under his inspection is being manufactured or the work performed. Work or material that does not conform to the specifications, although accepted through oversight, may be rejected at any stage of the work. Whenever the Contractor of installation or construction is permitted or directed to do night work or to vary the period during which work is carried on each day, he shall give the Engineer due notice, so that inspection may be provided. Such work shall be done under regulations to be furnished in writing by the Engineer.

B. No improvement shall be accepted by the City unless and until it is free of all liens and encumbrances, and free of all material defects and conditions which may create a hazard to the public health, safety, or welfare. In addition, all properties, rights- of-way, easements, and other interests to be dedicated to the City shall be, before acceptance thereof by the City, free and clear of all liens and encumbrances of any kind or character whatsoever and free of any and all material defects and conditions creating a hazard to public health or public safety.

8.08 - Infringement of Patents

The Contractor shall hold and save the City, its officers, agents, servants, and employees harmless from and against all and every demand or demands, of any nature or kind, for or on account of the use of any patented invention, process, equipment, article, or appliance employed in the execution of the work or included in the material or supplies agreed to be furnished under the contract, and should the Contractor, his agents, servants, or employees, or any of them, be enjoined from furnishing or using any invention, process, equipment, article, material, supplies or appliance supplied or required to be supplied or used under this contract, the Contractor shall promptly substitute other inventions, processes, equipment, articles, materials, supplies, or appliances in lieu thereof, of equal efficiency, quality, finish, suitability, and market value, and satisfactory in all respects to the Engineer. Or in the event that the Engineer elects, in lieu of such substitution, to have, supplied, and to retain and use, any such invention, process, equipment, article, material, supplies, or appliances, as may by this contract be required to be supplied and used, in that event the Contractor shall at his expense pay such royalties and secure such valid licenses as may be requisite and necessary to enable the City, its officers, agents, servants, and employees, or any of them, to use

such invention, process, equipment, article, material, supplies, or appliances without being disturbed or in any way interfered with by any proceeding in law or equity on account thereof. Should the Contractor neglect or refuse promptly to make the substitution herein before required, or to pay such royalties and secure such licenses as may be necessary and requisite for the purpose aforesaid, then in that event the Engineer shall have the right to make such substitution, or the City may pay such royalties and secure such licenses and charge the cost thereof against any money due the Contractor from the City, or recover the amount thereof from him and his surety, notwithstanding final payment under this contract may have been made.

Article 9 - Submittals

9.01 - General

A. The Contractor shall submit samples, drawings, and data for the Engineer's approval which demonstrate fully that the construction, and the materials and equipment to be furnished will comply with the provisions and intent of these plans and specifications.

B. Specific items to be covered by the submittals shall include, as a minimum, the following:

1. For structures, submit all shop, setting, equipment, miscellaneous iron and reinforcement drawings and schedules necessary.

2. For conduits, submit a detailed layout of the conduit with details of bends and fabricated specials and furnish any other details necessary. Show location of shop and field welds.

3. For equipment which requires electrical service, submit detailed information to show power supply requirements, wiring diagrams, control and protection schematics, shop test data, operation and maintenance procedures, outline drawings, and manufacturer's recommendation of the interface/interlock among the equipment.

4. For mechanical equipment submit all data pertinent to the installation and maintenance of the equipment including shop drawings, manufacturer's recommended installation procedure, detailed installation drawings, test data and curves, maintenance manuals, and other details necessary.

5. Samples.

6. Colors.

7. Substitutions.

8. Manuals.

9. As-built drawings.

C. Submit a schedule of submittals.

9.02 - Product Handling

A. Submittals shall be accompanied by a letter of transmittal and shall be in strict accordance with the provisions of this section.

B. Submit priority of processing when appropriate.

9.03 - Schedule of Submittals

Contractor shall provide the City with a schedule of submittals within ten (10) working days from the date of Notice of Award.

9.04 - Shop Drawings

A. Scale required: Make all shop drawings accurately to a scale sufficiently large to show all pertinent features of the item and its method of connection to the work.

B. Type of prints required: Make all shop drawings prints in blue or black line on white background. Reproductions of City drawings are not acceptable.

C. Size of drawings required: The overall dimensions of each drawing submitted to the Engineer shall be equal to one of the City's standard sheet sizes as listed below:

Sheet Sizes Height X Width
11" X 8 1/2"
11" X 17"
24" X 36"

The title block shall be located in the lower right-hand corner of each drawing and shall be clear of all line work, dimensions, details, and notes.

9.05 - Colors

Unless the precise color and pattern are specified elsewhere, submit accurate color charts and pattern charts to the Engineer for his review and selection whenever a choice of color or pattern is available in a specified product. Label each chart naming the source, the proposed location of use on the project, and the project.

9.06 - Manufacturers' Literature

Where contents of submitted literature from manufacturers includes data not pertinent to the submittal, clearly show which portions of the contents are being submitted for review.

9.07 - Substitutions

A. Engineer's approval required:

1. The contract is based on the materials, equipment, and methods described in the Contract Documents. Any Contractor-proposed substitutions are subject to the Engineer's approval.

2. The Engineer will consider proposals for substitution of materials, equipment, and methods only when such proposals are accompanied by full and complete technical data, and all other information required by the Engineer to evaluate the proposed substitution.

B. Trade names and "or approved equal" provision: See Article 8.03.

9.08 - Manuals

A. Format: When manuals are required to be submitted covering items included in this work, prepare such manuals in approximately 8-1/2" X 11" format in durable plastic binders and with at least the following:

1. Identification on, or readable through, the front cover stating general nature of the manual.

2. Neatly typewritten index near the front of the manual, furnishing immediate information as to location in the manual of all emergency data regarding the installation.

3. Complete instructions regarding operation and maintenance of all equipment involved.

4. Complete nomenclature of all replaceable parts, their part numbers, current cost, and name and address of nearest vendor of parts.

5. Copy of all guarantees and warranties issued.

6. Copy of drawings with all data concerning changes made during construction.

B. Extraneous data: Where contents of manuals include manufacturers' catalog pages, clearly indicate the precise items included in this installation and delete, or otherwise clearly indicate, all manufacturers' data with which this installation is not concerned.

9.09 - As-Built Drawings

A. When required to be submitted covering items included in this work, the Contractor shall deliver to the City one complete set of final As-Built reproducible drawings for City records before the contract will be accepted by the City.

B. The drawings shall be duplicates and at the same size and dimensional scale as the originals. They shall be on a polyester translucent base material with a minimum sheet thickness of .003 inch (.08mm).

C. The legibility and contrast of each drawing submitted to the City shall be such that every line, number, letter, and character is clearly readable in a full size blow back from a 35 mm microfilm negative of the drawing.

9.10 - Submittals Quantities

1. Submit six (6) copies of all data and drawings unless specified otherwise.

2. Submit all samples, unless specified otherwise, in the quantity to be

returned, plus two, which will be retained by the Engineer.

9.11 - Identification of Submittals

Completely identify each submittal and resubmittal by showing at least the following information:

1. Name and address of submitter, plus name and telephone number of the individual who may be contacted for further information.

2. Name of project as it appears in this specification and specification number.

3. Drawing number and specification section number other than this section to which the submittal applies.

4. Whether this is an original submittal or resubmittal.

5. For samples, indicate the source of the sample.

9.12 - Schedule of Submittals

A. Submit initial schedule of submittals within ten (10) days after Notice of Award.

B. Submit revised schedule of submittals within five (5) days after date of request from the Engineer.

C. Engineer will review schedule of submittals and will notify Contractor that schedule is acceptable or not acceptable within 5 days after receipt.

9.13 - Coordination of Submittals

A. Prior to submittal for Engineer's review, use all means necessary to fully coordinate all material, including the following procedures:

1. Determine and verify all field dimensions and conditions, materials, catalog numbers, and similar data.

2. Coordinate as required with all trades and with all public agencies involved.

3. Secure all necessary approvals from public agencies and others and signify by stamp, or other means, that they have been secured.

4. Clearly indicate all deviations from the contract documents.

B. Unless otherwise specifically permitted by the Engineer, make all submittals in groups containing all associated items; the Engineer may reject partial submittals as not complying with the provisions of the contract documents.

9.14 - Timing of Submittals

A. Make all submittals far enough in advance of scheduled dates of installation to provide all required time for reviews, for securing necessary approvals, for possible revision and resubmittal, and for placing orders and securing delivery.

B. In scheduling, allow at least ten (10) working days for the Engineer's review, plus the transit time to and from the City office.

C. Manuals shall be submitted prior to performing functional tests.

9.15 - Approval by City

A. One copy of each submittal, except manuals, schedule of costs for progress payments, and as-built drawings will be returned to the Contractor marked "Approved," "Approved as Noted," or "Returned for Correction," Manuals, schedule of costs and as-built drawings will be returned for resubmittal if incomplete or unacceptable.

B. Submittals marked "Approved as Noted" need not be resubmitted, but the notes shall be followed.

C. If submittal is returned for correction, it will be marked to indicate what is unsatisfactory.

D. Resubmit revised drawings or data as indicated, in seven (7) copies.

E. Approval of each submittal by the Engineer will be general only and shall not be construed as:

1. Permitting any departures from the contract requirements.

2. Relieving the Contractor of the responsibility for any errors and omissions in details, dimensions, or of other nature that may exist.

3. Approving departures from additional details or instructions previously furnished by the Engineer.

9.16 - Changes to Approved Submittals

A. Resubmittal is required for any proposed change to an approved submittal. Changes which require resubmittal include, but are not necessarily limited to, drawing revisions, changes in materials and equipment, installation procedures and test data. All resubmittals shall include an explanation of the necessity for the change.

B. Minor corrections to an approved submittal may be accomplished by submitting a "Corrected Copy."

Article 10 - Safety

10.01 Protection of Persons and Property

Notwithstanding any other provision of these specifications, the Contractor shall be solely and completely responsible for conditions of the job site, including safety of all persons and property, during performance of the work. This requirement will apply continuously and will not be limited to normal working hours. Safety and sanitary provisions shall conform to applicable Federal, State, County, and local laws, regulations, ordinances, standards, and codes. Where any of these are in conflict, the more stringent requirement shall be followed.

10.02 Protection from Hazards

A. Trench Excavation Safety Plans: Attention is directed to the provisions of Section 6705 of the Labor Code. Excavation for any trench 5 feet or more in depth shall not begin until the Contractor has received approval from the Engineer of the Contractor's detailed plan for worker protection from the hazards of caving ground during the excavation of such trench. Such plan shall show the details of the design of shoring, bracing, sloping or other provisions to be made for worker protection during such excavation. No such plan shall allow the use of shoring, sloping or protective system less effective than that required by the Construction Safety Orders of the Division of Occupational Safety and Health, and if such plan varies from the shoring system standards established by the Construction Safety Orders, the plan shall be prepared and signed by an engineer who is registered as a Civil or Structural Engineer in the State of California.

B. Confined Spaces:

1. Tests for the presence of combustible or dangerous gases shall be made with an approved device immediately prior to a worker entering a confined space and at intervals frequent enough to ensure a safe atmosphere during the time a worker is in such a structure. A record of such tests shall be kept at the job site. Sources of ignition, including smoking, shall be prohibited in any confined space until after the atmosphere within the confined space has been tested and found safe. Note: Confined spaces for the purpose of this Article shall mean the interior of storm drains, sewers, vaults, utility pipelines, manholes, reservoirs, and any other such structure which is similarly surrounded by confining surfaces so as to permit the accumulation of dangerous gases or vapors.

2. No employees shall be permitted to enter or remain within a confined space until such confined space is free of concentrations of harmful gases, and lack of oxygen, unless the employee is wearing suitable and approved respiratory equipment. Confined spaces that contain or that have last been used as container of toxic gases,

light oils, hydrogen sulfide, corrosives, or poisonous substances, shall, in every case, be tested by means of approved devices or chemical analysis before being entered without wearing approved respiratory equipment. Reservoirs, vessels, or other confined spaces having openings or manholes in the side as well as in the top shall be entered from the side opening or manholes when practicable.

C. Material Safety Data Sheet: Attention is directed to the provisions of General Industry Safety Orders, Section 5194, Title 8, California Administrative Code. The Contractor shall submit to the Engineer a Material Safety Data Sheet (MSDS) for each hazardous substance proposed to be used, ten days prior to the delivery of such material to the job site or use of such material at a manufacturing plant where the Engineer is to perform an inspection. For materials which are to be tested in City laboratories, the MSDS shall be submitted with the sample(s). Hazardous substance is defined as any substance included in the list (Director's List) of hazardous substances prepared by the Director, California Department of Industrial Relations, pursuant to Labor Code Section 6382. Failure to submit an MSDS for any hazardous substance may result in actions as provided in Article 5, "SUSPENSION OR TERMINATION OF CONTRACT", of these General Conditions.

10.03- Differing Site Conditions

A. Attention is directed to Section 7104 of the Public Contract Code.

B. The Contractor shall promptly, and before such conditions are disturbed, notify the Engineer in writing of:

1. Material that the Contractor believes may be hazardous waste, as defined in Section 25117 of the Health and Safety Code that is required by law to be removed to a Class I, Class II, or Class III disposal site.

2. Subsurface or latent physical conditions at the site differing materially from those indicated in its contract.

3. Unknown physical conditions at their site, of an unusual nature, differing materially from those ordinarily encountered and generally recognized as inherent in work of the character provided for in this contract.

C. The Engineer will promptly investigate the conditions. If he finds that such conditions do materially differ, or do involve hazardous waste, and do cause an increase or decrease in the Contractor's cost of, or time required for, performance of any part of the work under this contract, an equitable adjustment will be made, as determined by the Engineer.

D. In the event of disagreement between the Contractor and the Engineer whether the conditions do materially differ or whether a hazardous waste is involved or whether the conditions cause an increase or decrease in the Contractor's cost of, or time required for, performance of any part of the work, the Contractor shall not be excused from any completion date required by the contract, but shall proceed with all work to be performed under the contract.

E. The Contractor shall retain all rights provided by, and shall be subject to all requirements of, this contract which pertain to the resolution of disputes and protests.

10.04 - Traffic Regulation

A. Temporary Safeguards: During the performance of the work the Contractor shall erect and maintain necessary temporary fences, bridges, railings, lights, signals, barriers, or other safeguards as shall be appropriate under the circumstance in his judgment for the prevention of accidents; and he shall take other precautions as necessary for public safety including, but not limited to, traffic control. Traffic control shall be conducted in accordance with the latest edition of the California Manual on Traffic Control Devices (CAMUTCD).

B. Submittals: Contractor shall submit at least 15 days prior to work a detailed traffic control plan, that is approved by all agencies having jurisdiction and that conforms to all requirements of these specifications.

C. Quality Assurance:

1. No changes or deviations from the approved detailed traffic control plan shall be made, except temporary changes in emergency situations, without prior approval of the Engineer and all agencies having jurisdiction.

2. Contractor shall immediately notify the Engineer and the agencies having jurisdiction of occurrences that necessitate modification of the approved traffic control plan.

10.05 - Traffic Control Devices

Traffic signs, flashing lights, barricades and other traffic safety devices used to control traffic shall conform to the requirements of the California Manual on Traffic Control Devices (CAMUTCD).

A. Portable signals shall not be used unless permission is given in writing by the agency having jurisdiction.

B. Warning signs used for nighttime conditions shall be reflectorized or illuminated. "Reflectorized signs" shall have a reflectorized background and shall conform to the

current State of California Department of Transportation specification for reflective sheeting on highway signs.

10.06 - Execution

A. Roads subject to interference from the work covered by this contract shall be kept open, and the fences subject to interference shall be kept up by the Contractor until the work is finished. Except where public roads have been approved for closure, traffic shall be permitted to pass through designated traffic lanes with as little inconvenience and delay as possible.

B. Where alternating one-way traffic has been authorized, the maximum time that traffic will be delayed shall be posted at each end of the one-way traffic section. The maximum delay time shall be approved by the agency having jurisdiction.

C. Contractor shall install temporary traffic markings where required to direct the flow of traffic and shall maintain the traffic markings for the duration of need. Contractor shall remove the markings by abrasive blasting when no longer required.

D. Convenient access to driveways and buildings in the vicinity of work shall be maintained as much as possible. Temporary approaches to, and crossing of, intersecting traffic lanes shall be provided and kept in good condition.

E. When leaving a work area and entering a roadway carrying public traffic, the Contractor's equipment, whether empty or loaded, shall in all cases yield to public traffic.

10.07 - Flagging

Contractor shall provide flaggers to control traffic where required by the approved traffic control plan.

A. Flaggers shall perform their duties and shall be provided with the necessary equipment in accordance with the current "Instructions to Flaggers" of the California Department of Transportation.

B. Flaggers shall be employed full time on traffic control and shall have no other duties.

Article 11 - Indemnity, Insurance and Bonds

11.01 - Indemnity Standard Specifications

The indemnity provisions shall be as follows.

11.01-1 - Contractor's Duty

To the maximum extent permitted by law, Contractor hereby agrees, at its sole cost and expense, to defend with competent defense counsel approved by the City Attorney, protect, indemnify, and hold harmless the City, its elected and appointed officials, officers, employees, volunteers, attorneys, agents (including those City agents serving as independent contractors in the role of City representative), successors, and assigns (collectively "Indemnitees") from and against any and all claims (including, without limitation, claims for bodily injury, death or damage to property), demands, charges, obligations, damages, causes of action, proceedings, suits, losses, stop payment notices, judgments, fines, liens, penalties, liabilities, costs and expenses of every kind and nature whatsoever, in any manner arising out of, incident to, related to, in connection with or resulting from any act, failure to act, error or omission of Contractor or any of its officers, agents, attorneys, servants, employees, Subcontractors, material suppliers or any of their officers, agents, servants or employees, arising out of, incident to, related to, in connection with or resulting from any term, provision, image, plan, covenant, or condition in the Contract Documents, including without limitation, the payment of all consequential damages, attorneys' fees, experts' fees, and other related costs and expenses (individually, a "Claim," or collectively, "Claims"). Contractor shall promptly pay and satisfy any judgment, award or decree that may be rendered against Indemnitees in any such Claim. Contractor shall reimburse Indemnitees for any and all legal expenses and costs incurred by each of them in connection therewith or in enforcing the indemnity herein provided. Contractor's obligation to indemnify shall not be restricted to insurance proceeds, if any, received by Contractor or Indemnitees. This indemnity shall apply to all Claims regardless of whether any insurance policies are applicable or whether the Claim was caused in part or contributed to by an Indemnitees.

11.01-2 - Civil Code Exception

Nothing in this Section 11.01 shall be construed to encompass Indemnitees' sole negligence or willful misconduct to the limited extent that the underlying Contract is subject to Civil Code Section 2782(a) or the City's active negligence to the limited extent that the underlying Contract Documents are subject to Civil Code Section 2782(b), provided such sole negligence, willful misconduct or active negligence is determined by agreement between the parties or by the findings of a court of competent jurisdiction.

11.01-3 - Nonwaiver of Rights

Indemnitees do not and shall not waive any rights that they may possess against Contractor because the acceptance by City, or the deposit with City, of any insurance policy or certificate required pursuant to these Contract Documents. This indemnity provision is effective regardless of any prior, concurrent, or subsequent active or passive negligence by Indemnitees and shall operate to fully indemnify Indemnitees against any such negligence.

11.01-4 - Waiver of Right of Subrogation

Contractor, on behalf of itself and all parties claiming under or through it, hereby waives all rights of subrogation and contribution against the Indemnitees, while acting within the scope of their duties, from all Claims arising out of or incident to the activities or operations performed by or on behalf of the Contractor regardless of any prior, concurrent or subsequent active or passive negligence by Indemnitees.

11.01-5 - Survival

The provisions of this Section 11.01 shall survive the term and termination of the Contract, are intended to be as broad and inclusive as is permitted by the law of the State, and are in addition to any other rights or remedies that Indemnitees may have under the law. Payment is not required as a condition precedent to an Indemnitee's right to recover under this indemnity provision, and an entry of judgment against a Contractor shall be conclusive in favor of the Indemnitee's right to recover under this indemnity provision.

11.02 - Minimum Scope of Insurance

Contractor shall maintain minimum insurance coverage, at least as broad as following:

A. Insurance Services Office Commercial General Liability coverage (occurrence form CG 0001).

B. Insurance Services Office form number CA 0001 (Ed. 1/87) covering Automobile Liability, code 1 (any auto).

C. Workers' Compensation insurance as required by the State of California and Employer's Liability Insurance. California Labor Code Sections 1860 and 3700 provide that every contractor will be required to secure the payment of compensation to its employees. In accordance with the provisions of California Labor Code Section 1861, the Contractor hereby certifies as follows:

"I am aware of the provisions of Section 3700 of the Labor Code which require every employer to be insured against liability for workers' compensation or to undertake self-insurance in accordance with the provisions of that code, and I will comply with such provisions before commencing the performance of the work of this contract."

11.03 - Minimum Limits of Insurance

Contractor shall maintain minimum insurance limits no less than the following:

A. General Liability: $1,000,000 per occurrence for bodily injury, personal injury and property damage. The general aggregate limit shall apply separately to this project/location.

B. Automobile Liability: $1,000,000 per accident for bodily injury and property damage.

C. Employer's Liability: $1,000,000 per accident for bodily injury or disease.

11.04 - Deductibles and Self-Insured Retentions

Any deductibles or self-insured retentions must be declared to and approved by the City. At the option of the City, either: (1) the insurer shall reduce or eliminate such deductibles or self-insured retentions as respects the City, its officers, officials, employees and volunteers, or (2) the Contractor shall provide a financial guarantee satisfactory to the City guaranteeing payment of losses and related investigations, claim administration and defense expenses.

11.05 - Other Insurance Provisions

The general liability and automobile liability policies are to contain, or be endorsed to contain, the following provisions:

A. Additional Insured Endorsement:

1. General Liability: The City, its officers, elected and appointed officials, employees, and volunteers are to be covered as insureds with respect to liability arising out of work or operations performed by or on behalf of the Contractor including materials, parts or equipment furnished in connection with such work or operations. General liability coverage can be provided in the form of an endorsement to the contractor's insurance, or as a separate owner's policy.

2. Automobile Liability: The City, its officers, elected and appointed officials, employees, and volunteers are to be covered as insureds with respect to liability arising out of automobiles owned, leased, hired or borrowed by or on behalf of the Contractor.

B. For any claims related to this project, the Contractor's insurance coverage shall be primary insurance as respects the City, its officers, elected and appointed officials, employees, and volunteers. Any insurance or self-insurance maintained by the City, its officers, officials, employees, or volunteers shall be excess of the Contractor's insurance and shall not contribute with it.

C. Each insurance policy required by this clause shall be endorsed to state that coverage shall not be canceled by either party, except after thirty (30) days prior written notice by certified mail, return receipt requested, has been given to the City.

D. Each insurance policy shall be endorsed to state that the inclusion of more than one insured shall not operate to impair the rights of one insured against another insured, and the coverages afforded shall apply as though separate policies had been issued to each insured.

E. Each insurance policy shall be in effect prior to awarding the contract and each insurance policy or a successor policy shall be in effect for the duration of the project. The maintenance of proper insurance coverage is a material element of the contract and failure to maintain or renew coverage or to provide evidence of renewal may be treated by the City as a material breach of contract on the Contractor's part.

11.06 - Acceptability of Insurers

Insurance is to be placed with insurers with a current A.M. Best's rating of no less than A:VII.

11.07 - Verification of Coverage

Contractor shall furnish the City with original certificates and amendatory endorsements effecting coverage required by this clause. The endorsements should be on the City authorized forms provided with the contract specifications. Standard ISO forms which shall be subject to City approval and amended to conform to the City's requirements may be acceptable in lieu of City authorized forms. All certificates and endorsements are to be received and approved by the City before the contract is awarded. The City reserves the right to require complete, certified copies of all required insurance policies, including endorsements effecting the coverage required by these specifications at any time.

11.08 - Subcontractors

Contractor shall include all subcontractors as insured under its policies or shall furnish separate certificates and endorsements for each subcontractor. All coverages for subcontractors shall be subject to all of the requirements stated herein.

11.09 - Risk Management

Contractor acknowledges that insurance underwriting standards and practices are subject to change, and the City reserves the right to make changes to these provisions in the reasonable discretion of its Risk Manager.

11.10 - Endorsements and Certificate

A. Contractor shall have its insurance carrier(s) complete and execute the following documents, together with a copy of each insurance policy required under the contract, including all endorsements thereto, which shall be delivered to the Project Manager / Consulting Engineer within ten (10) working days following issuance of the Resolution of Award of Public Works Project:

   1. Form entitled: General Liability Endorsement, attached hereto as Exhibit A.

   2. Form entitled: Automotive Liability Endorsement, attached hereto as Exhibit B.

   3. Proof of Worker's Compensation Insurance (Employer's Liability), or if Contractor is self-insured for worker's compensation, a self-insuring certificate therefor from the State of California.

   4. Form entitled: Waiver of Subrogation Clause and Contribution, attached hereto as Exhibit C, for all coverage and policies.

   5. Form entitled: Certificate of Insurance, with 30 days' prior notice of cancellation required as to all coverage and policies.

B. The contract will not be executed by the City and the Notice to Proceed issued until the aforesaid insurance documents have been received and approved by the City. City's decision as to the acceptability of all insurance documents is final. No substitution of the form of the documents or the endorsements or amendments thereto will be permitted without the prior written consent of City.

11.11 - Bonds

A. Contractor shall furnish the following bonds:

   1. A Faithful Performance Bond in an amount equal to One Hundred percent (100%) of the contract price on City form, attached hereto as Exhibit E.

   2. A Payment Bond (Labor and Material) in an amount equal to One Hundred percent (100%) of the total contract price on City form, attached hereto as Exhibit F.

3. A Maintenance Bond in an amount equal to Ten percent (10%) of the total contract price on City form, attached hereto as Exhibit G.

B. All such bonds shall be accompanied by a power of attorney from the surety company authorizing the person executing the bond to sign on behalf of the company. If the bonds are executed outside the State of California, all copies of the bonds must be countersigned by a California representative of the surety. The signature of the person executing the bond shall be acknowledged by a notary public as the signature of the person designated in the power of attorney.

C. The surety or sureties on all bonds furnished must be satisfactory to the City. City will reject surety bonds obtained from any company which is not an admitted surety insurer under the laws of the State of California and which does not hold a Certificate of Authority from the U.S. Secretary of the Treasury under 31 U.S.C. $$ 9304- 9306 as an acceptable surety on federal bonds. The surety must also be listed in the latest edition of U.S. Department of Treasury Circular 570, and the bonds provided must not exceed the surety's bonding limitations as set forth in Circular 570. Bonds shall be in multiples of $1,000 only; provided, however, that the amount of the bond shall otherwise be fixed at the lowest sum that will fulfill all conditions herein set forth.

D. If during the continuance of the Contract any of the sureties, in the opinion of the City, are or become non-responsible or otherwise unacceptable to City, City may require other new or additional sureties, which the Contractor shall furnish to the satisfaction of City within ten days after notice, and in default thereof the contract may be suspended and the materials may be purchased or the work completed as provided in Article 5 herein.

E. No modifications or alterations made in the work to be performed under the contract or the time of performance shall operate to release any surety from liability on any bond or bonds required to be given herein. Notice of such events be waived by the surety.

F. The contract will not be executed by City nor the Notice to Proceed issued until the aforesaid bonds have been received and approved by City. City's decision as to the acceptability of all sureties and bonds is final. No substitution of the form of the documents will be permitted without the prior written consent of City.

Article 12 - Labor Provisions

12.01 - Working Hours

A. Work or activity of any kind shall be limited to the hours from 7:00 a.m. to 6:00 p.m. Monday through Friday. City Hall is closed every other Friday.
B. Work on Saturdays, Sundays, or City holidays requires prior consent of the Project Manager / Consulting Engineer and is subject to Cost of Overtime Construction Inspection.
C. City holidays are:

New Year's Day
Martin Luther King, Jr. Day
Presidents' Day
Memorial Day (observed the last Monday in May)
Independence Day
Labor Day (observed the first Monday in September)
Veterans Day
Thanksgiving Day
Friday after Thanksgiving Day
Christmas Eve
Christmas Day

Holidays which fall on Saturday shall be observed the preceding Friday and holidays which fall on Sunday shall be observed the following Monday.

12.02 - Cost of Overtime Construction Inspection

A. Overtime construction work performed at the option of, or for the convenience of, the Contractor will be inspected by the City at the expense of the Contractor. For any such overtime beyond the regular 8-hour day and for any time worked on Saturday, Sunday, alternating City Hall closed Fridays, or holidays the charges will be as shown in the following schedule:

Class	Charge Per Hour
Construction Inspector	$ 170.00

Other equipment as identified in City Council Resolution, Fees for Public Works permits, inspections, reviews and services for sewer connection fees.

B. There will be no charges for the inspection of overtime work ordered by the Project Manager or required by the specifications.

12.03 - Compliance with State Labor Code

A. Contractor acknowledges that this project is a "public work" as defined in Division 2, Part 7, Chapter 1 (commencing with Section 1720) of the California Labor Code ("Chapter 1"), and that this Agreement is subject to (1) Chapter 1, including without limitation Labor Code Section 1771 and (2) the rules and regulations established by the Director of Industrial Relations ("DIR") implementing such statutes. Contractor shall perform all work on the project as a public work. Contractor shall comply with and be bound by all the terms, rules and regulations described in (1) and (2) as though set forth in full herein.

B. California law requires the inclusion of specific Labor Code provisions in certain contracts. The inclusion of such specific provisions below, whether or not required by California law, does not alter the meaning or scope of Section 12.03 A above.

C. Contractor acknowledges that eight (8) hours labor constitutes a legal day's work. Contractor shall comply with and be bound by Labor Code Section 1810. Contractor shall comply with and be bound by the provisions of Labor Code Section 1813 concerning penalties for workers who work excess hours. The Contractor shall, as a penalty to the City, forfeit twenty-five dollars ($25) for each worker employed in the performance of this Agreement by the Contractor or by any subcontractor for each calendar day during which such worker is required or permitted to work more than eight (8) hours in any one (1) calendar day and forty (40) hours in any one calendar week in violation of the provisions of Division 2, Part 7, Chapter 1, Article 3 of the Labor Code. Pursuant to Labor Code Section 1815, work performed by employees of Contractor in excess of 8 hours per day, and 40 hours during any one week shall be permitted upon public work upon compensation for all hours worked in excess of 8 hours per day at not less than 1 and 1/2 times the basic rate of pay.

D. For every subcontractor who will perform work on the project, Contractor shall be responsible for such subcontractor's compliance with Chapter 1 and Labor Code Sections 1860 and 3700, and Contractor shall include in the written contract between it and each subcontractor a copy of those statutory provisions and a requirement that each subcontractor shall comply with those statutory provisions. Contractor shall be required to take all actions necessary to enforce such contractual provisions and ensure subcontractor's compliance, including without limitation, conducting a periodic review of the certified payroll records of the subcontractor and upon becoming aware of the failure of the subcontractor to pay his or her workers the specified prevailing rate of wages (described in Section 12.04 below). Contractor shall diligently take corrective action to halt or rectify any failure.

E. Pursuant to Labor Code Section 1771.4, Contractor shall post job site notices, as prescribed by regulation.

F. Pursuant to Labor Code Section 1771.4(a)(1), project is subject to compliance monitoring and enforcement by the Department of Industrial Relations.

12.04 - Wage Rates

A. State Prevailing Wages: The Contractor shall pay its workers on this City project, in accordance with the prevailing wage rate.

1. Pursuant to Labor Code Section 1773.2, copies of the prevailing rate of per diem wages for each craft, classification, or type of worker needed to perform the Agreement are on file at City Hall and will be made available to any interested party on request. Contractor acknowledges receipt of a copy of the DIR determination of such prevailing rate of per diem wages, and Contractor shall post such rates at each job site covered by this Agreement.

2. Contractor shall comply with and be bound by the provisions of Labor Code Sections 1774 and 1775 concerning the payment of prevailing rates of wages to workers and the penalties for failure to pay prevailing wages. The Contractor shall, as a penalty to the City, forfeit the maximum amount allowable by law for each calendar day, or portion thereof, for each worker paid less than the prevailing rates as determined by the DIR for the work or craft in which the worker is employed for any public work done pursuant to this Agreement by Contractor or by any subcontractor. The difference between the prevailing wage rates and the amount paid to each worker for each calendar day or portion thereof for which such worker was paid less than the stipulated prevailing wage rate shall be paid to such worker by the Contractor.

3. The specified wage rates are minimum rates only and the City will not consider and shall not be liable for any claims for additional compensation made by the Contractor because of payment by him of any wage rate in excess of the general prevailing rates. All disputes in regard to the payment of wages in excess of those specified herein shall be adjusted by the Contractor at his own expense.

4. The holidays upon which such rates shall be paid shall be all holidays recognized in the collective bargaining agreement applicable to the particular craft, classification, or type of worker employed on the project.

5. Pursuant to Section 1773.8 of the Labor Code, travel and subsistence payments shall be made to each worker needed to execute the work, as such travel and subsistence payments are defined in the applicable collective bargaining agreements filed with the Director of Industrial Relations, State of California.

B. Federal Prevailing Wages: In the event this is a federally assisted construction contract, Contractor acknowledges that federal labor standards provisions, including prevailing wage requirements of the Davis-Bacon and Related Acts, will be enforced. Contractor

understands that in the event of a conflict between the Federal General Wage Decision as established by the United States Department of Labor (available at www.access.gpo.gov/davisbacon/ca.html) and the State General Prevailing Wage Determination as established by the California Department of Industrial Relations (available at http://www.dir.ca.gov/DLSR/PWD/index.htm), the higher of the two will prevail. The City will not consider and shall not be liable for any claims for additional compensation made by the Contractor because of payment by him of any wage rate in excess of the federal wage rates. All disputes in regard to the payment of wages in excess of those specified herein shall be adjusted by the Contractor at its own expense.

C. Payroll Records: Contractor shall comply with and be bound by the provisions of Labor Code Section 1776, which requires Contractor and each subcontractor to (1) keep accurate payroll records and verify such records in writing under penalty of perjury, as specified in Section 1776, (2) certify and make such payroll records available for inspection as provided by Section 1776, and (3) inform the City of the location of the records, including the street address, city and county, and shall, within five working days, provide a notice of a change in location and address. The Contractor and every subcontractor shall keep an accurate record showing the name of and the actual hours worked each calendar day and each calendar week by each worker employed by him in connection with the work. Upon request by the Project Manager / Consulting Engineer, the Contractor shall provide a copy of the certified payroll records along with a statement of compliance.

12.05 - Employment of Apprentices

A. Contractor shall comply with and be bound by the provisions of Labor Code Sections 1777.5, 1777.6 and 1777.7 and California Administrative Code title 8, section 200 et seq. concerning the employment of apprentices on public works projects. Contractor shall be responsible for compliance with these aforementioned Sections for all apprenticeable occupations. Prior to commencing work under this Agreement, Contractor shall provide City with a copy of the information submitted to any applicable apprenticeship program. Within sixty (60) days after concluding work pursuant to this Agreement, Contractor and each of its subcontractors shall submit to the City a verified statement of the journeyman and apprentice hours performed under this Agreement.

B. In the event the Contractor or any subcontractor willfully fails to comply with the aforesaid sections, such Contractor or subcontractor shall be subject to the penalties for noncompliance in Labor Code Section 1777.7.

12.06 - Character of Workmen

The Contractor shall not allow its agents or employees, its subcontractors, or any agent or employee thereof, to trespass on premises or lands in the vicinity of the work. Only

skilled foremen and workmen shall be employed on work requiring special qualifications, and when required by the Project Manager / Consulting Engineer, the Contractor shall discharge any person who commits trespass or in the opinion of the Project Manager / Consulting Engineer disorderly, dangerous, insubordinate, incompetent, or otherwise objectionable. Any employee being intoxicated or bringing or having intoxicating liquors on the work shall be discharged. Such discharge shall not be the basis of any claim for compensation of damages against the City or any of its officers.

Exhibits

Exhibit A – General Liability Endorsement

GENERAL LIABILITY ENDORSEMENT

POLICY INFORMATION

Insurance Company _____ Policy Number _____

Policy Term (From) _____ (To) _____ Endorsement Effective Date _____

Named Insured _____

Address of Named Insured _____

Limit of Liability any One Occurrence/Aggregate $_____/_____

General Liability Aggregate Applies Separately to This Project/Location:

Yes _____ No _____

Deductible or Self-Insured Retention (None unless otherwise specified): _____

Coverage is equivalent to Commercial General Liability occurrence form CG 0001:

Yes _____ No _____

POLICY AMENDMENTS

1. WHO IS AN INSURED (Section II) is amended to include as an insured the City of Rolling Hills, its officers, elected and appointed officials, employees, and volunteers, but only with respect to liability arising out of work or operations performed by or on behalf of the Contractor including materials, parts or equipment furnished in connection with such work or operations.
2. This insurance shall be primary as respects the insured shown in the schedule above, or if excess, shall stand in an unbroken chain of coverage excess of the Named Insured's scheduled underlying primary coverage. In either event, any other insurance maintained by the Insured scheduled above shall be in excess of this insurance and shall not be called upon to contribute with it.
3. The insurance afforded by this policy shall not be canceled except after thirty days prior written notice by certified mail return receipt requested has been given to the City.

INCIDENT AND CLAIM REPORTING PROCEDURE

Incidents and claims are to be reported to the insurer at:

_____
(Name/Department)

_____
(Company)

_____
(Address)

_____
(City/State/Zip)

_____
(Phone)

SIGNATURE OF INSURER OR AUTHORIZED REPRESENTATIVE OF THE INSURER

I, _____ (print/type name), warrant that I have authority to bind the below listed insurance company and by my signature hereon do so bind this company.

_____
Signature - Authorized Representative / Title

_____
Organization

_____
Address/Telephone

_____
Date

Exhibit B – Automobile Liability Endorsement

AUTOMOBILE LIABILITY ENDORSEMENT

POLICY INFORMATION

Insurance Company _____ Policy Number _____

Policy Term (From) _____ (To) _____ Endorsement Effective Date _____

Named Insured _____

Address of Named Insured _____

Limit of Liability any One Occurrence/Aggregate $_____/_____

Deductible or Self-Insured Retention (None unless otherwise specified): _____

Coverage is equivalent to Commercial Auto form CA 0001, Code 1 (“any auto”) on endorsement CA 0025: Yes _____ No _____

POLICY AMENDMENTS

1. **WHO IS AN INSURED** (Section II) is amended to include as an insured the City of Rolling Hills, its officers, elected and appointed officials, employees, and volunteers, but only with respect to liability arising out of automobiles owned, leased, hired or borrowed by or on behalf of the Contractor.
2. This insurance shall be primary as respects the insured shown in the schedule above, or if excess, shall stand in an unbroken chain of coverage excess of the Named Insured’s scheduled underlying primary coverage. In either event, any other insurance maintained by the Insured scheduled above shall be in excess of this insurance and shall not be called upon to contribute with it.
3. The insurance afforded by this policy shall not be canceled except after thirty days prior written notice by certified mail return receipt requested has been given to the City.

INCIDENT AND CLAIM REPORTING PROCEDURE

Incidents and claims are to be reported to the insurer at:

_____
(Name/Department)

_____
(Company)

_____
(Address)

_____
(City/State/Zip)

_____
(Phone)

INCIDENT AND CLAIM REPORTING PROCEDURE

I, _____ (print/type name), warrant that I have authority to bind the below listed insurance company and by my signature hereon do so bind this company.

_____
Signature - Authorized Representative / Title

_____
Organization

_____
Address/Telephone

_____
Date

Exhibit C – Waiver of Subrogation and Contribution

WAIVER OF SUBROGATION AND CONTRIBUTION

The contractor and the insurer, jointly and severally, on behalf of themselves, and all parties claiming under or through them, hereby waive all rights of subrogation and contribution against the City of Rolling Hills and its officers, employees, elected officials, attorneys, members of boards and commissions, agents, and volunteers (hereinafter collectively referred to as "City"), while acting within the scope of their duties, from all claims, losses and liabilities arising out of or incident to the perils insured against in connection with the performance of the work under the designated contract by the contractor, its subcontractors, and the respective officers, agents and employees thereof, regardless of any prior, concurrent, or subsequent active or passive negligence by city.

Designated Contract: **Tennis Court ADA Improvement Project, Job No. 2025-01**

Name of Contractor:_____

Name of Insurer:_____

Policy No(s):_____

CONTRACTOR	**INSURER**
By: _____	By: _____
Name: _____	Name: _____
Its: _____	Its: _____

Exhibit D – Deductible Sample Letter

_____
_____
_____
(Name, Address and Phone No. of Contractor)

Date: _____

City of Rolling Hills
2 Portuguese Bend Road
Rolling Hills, CA. 90274

Subject: XXXXXXXXX Project, Job No. XXXXX

Dear Sir/Madam:

(Contractor's Name) hereby assumes sole responsibility for any and all deductibles on all its Policies, and shall cover any and all claims that might arise out of working by/for (Contractor's Name) on the above subject project, that said deductibles might not cover.

_____

Authorized Representative

Name: _____

Title: _____

Performance Bond

Bond No. : _____

KNOW ALL PERSONS BY THESE PRESENTS that:

WHEREAS, the City of Rolling Hills, California ("City"), has awarded to

_____

_____

(Name and address of Contractor)

("Principal"), a contract ("Contract") for the work described as follows:

Tennis Court ADA Improvement Project, Job No. 2025-01

WHEREAS, Principal is required under the terms of the Contract to furnish a bond for the faithful performance of the Contract.

NOW, THEREFORE, we, the undersigned Principal, and

_____

_____

(Name and address of Surety)

("Surety") a duly admitted surety insurer under the laws of the State of California, as Surety, are held and firmly bound unto the City in the penal sum of

_____ Dollars ($_____), this amount being not less than one hundred percent (100%) of the total contract price, in lawful money of the United States of America, for the payment of which sum well and truly to be made, we bind ourselves, our heirs, executors, administrators, successors, and assigns, jointly and severally, firmly by these presents.

THE CONDITION OF THIS OBLIGATION IS SUCH THAT, if the hereby bound Principal, its heirs, executors, administrators, successors or assigns, shall in all things stand to and abide by, and will and truly keep and perform all the undertakings, terms, covenants, conditions and agreements in the Contract and any alteration thereof made as therein provided, on the Principal's part to be kept and performed, all within the time and in the manner therein specified, and in all respects according to their true intent and meaning, and shall indemnify and hold harmless the City, its officers, agents, and others as therein provided, then this obligation shall

become null and void; otherwise, it shall be and remain in full force and effect. In case suit is brought upon this bond, Surety further agrees to pay all court costs incurred by the City in the suit and reasonable attorneys' fees in an amount fixed by the court.

FURTHER, the Surety, for value received, hereby stipulates and agrees that no change, extension of time, alteration, addition or modification to the terms of the Contract, or of the work to be performed thereunder, or the specifications for the same, shall in any way affect its obligations under this bond, and it does hereby waive notice of any such change, extension of time, alteration, addition, or modification to the terms of the Contract or to the work or to the specifications thereunder.

IN WITNESS WHEREOF, two (2) identical counterparts of this instrument, each of which shall for all purposes be deemed an original hereof, have been duly executed by Principal and Surety, on the date set forth below, the name of each corporate party being hereto affixed and these presents duly signed by its undersigned representative(s) pursuant to authority of its governing body.

Date:_____

"**Principal**"	**"Surety"**
_____	_____
_____	_____
By: _____	By: _____
Name: _____	Name: _____
Its: _____	Its: _____
By: _____	By: _____
Name: _____	Name: _____
Its: _____	Its: _____

(Seal) (Seal)

CITY OF ROLLING HILLS

APPROVED AS TO SURETY AND PRINCIPAL AMOUNT

By: _____
Christian Horvath, Risk Manager

APPROVED AS TO FORM

By: _____
Patrick Donegan, City Attorney

Note: This bond must be executed in duplicate and dated. All signatures must be notarized, and evidence of the authority of any person signing as attorney-in-fact must be attached.

Exhibit F – Payment Bond

Payment Bond

(Labor and Material)

Bond No. : _____ KNOW ALL PERSONS BY THESE PRESENTS that:

WHEREAS, the City of Rolling Hills, California ("City"), has awarded to

_____

_____

(Name and address of Contractor)

("Principal"), a contract ("Contract") for the work described as follows:

Tennis Court ADA Improvement Project, Job No. 2025-01

WHEREAS, Principal is required under the terms of the Contract and the California Civil Code secure the payment of claims of laborer, mechanics, materialmen, and other persons as provided by law

NOW, THEREFORE, we, the undersigned Principal, and

_____

_____

(Name and address of Surety)

("Surety") a duly admitted surety insurer under the laws of the State of California, as Surety, are held and firmly bound unto the City in the penal sum of _____ Dollars ($_____), this amount being not less than one hundred percent (100%) of the total contract price, in lawful money of the United States of America, for the payment of which sum well and truly to be made, we bind ourselves, our heirs, executors, administrators, successors, and assigns, jointly and severally, firmly by these presents.

THE CONDITION OF THIS OBLIGATION IS SUCH THAT, if the hereby bound Principal, its heirs, executors, administrators, successors or assigns, or subcontractors shall fail to pay any of the persons named in Section 3181 of the California Civil Code, or any amounts due under the Unemployment Insurance Code with respect to work or labor performed under the Contract, or for any amounts required to be deducted, withheld, and paid over to the Employment Development Department from the wages of employees of the Principal and subcontractors pursuant to Section 13030 of the Unemployment Insurance Code, with respect to work or labor performed under the Contract, the Surety will pay for the same in an amount not exceeding the

penal sum specified in this bond; otherwise, this obligation shall become null and void. This bond shall inure to the benefit of any of the persons named in Section 3181 of the California Civil Code so as to give a right of action to such persons or their assigns in any suit brought upon the bond. In case suit is brought upon this bond, Surety further agrees to pay all court costs incurred by the City in the suit and reasonable attorneys' fees in an amount fixed by the court.

FURTHER, the Surety, for value received, hereby stipulates and agrees that no change, extension of time, alteration, addition or modification to the terms of the Contract, or of the work to be performed thereunder, or the specifications for the same, shall in any way affect its obligations under this bond, and it does hereby waive notice of any such change, extension of time, alteration, addition, or modification to the terms of the Contract or to the work or to the specifications thereunder.

IN WITNESS WHEREOF, two (2) identical counterparts of this instrument, each of which shall for all purposes be deemed an original hereof, have been duly executed by Principal and Surety, on the date set forth below, the name of each corporate party being hereto affixed and these presents duly signed by its undersigned representative(s) pursuant to authority of its governing body.

Date:_____

"Principal"	**"Surety"**
_____	_____
_____	_____
By: _____	By: _____
Name: _____	Name: _____
Its: _____	Its: _____
By: _____	By: _____
Name: _____	Name: _____
Its: _____	Its: _____
(Seal)	(Seal)

CITY OF ROLLING HILLS

APPROVED AS TO SURETY AND PRINCIPAL AMOUNT

By: _____
Christian Horvath, Risk Manager

APPROVED AS TO FORM

By: _____
Patrick Donegan, City Attorney

Note: This bond must be executed in duplicate and dated. All signatures must be notarized, and evidence of the authority of any person signing as attorney-in-fact must be attached.

Exhibit G – Maintenance Bond

Maintenance Bond

Bond No. : _____ KNOW ALL PERSONS BY THESE PRESENTS that:

WHEREAS, the City of Rolling Hills, California ("City"), has awarded to

_____

_____

(Name and address of Contractor)

("Principal"), a contract ("Contract") for the work described as follows:

Tennis Court ADA Improvement Project, Job No. 2025-01

WHEREAS, the Principal is required to furnish a bond in connection with said contract guaranteeing the maintenance thereof.

NOW, THEREFORE, we, the undersigned Contractor and Surety, are held firmly bound unto the City in the penal sum of_____ Dollars ($_____), this amount being not less than ten percent (10%) of the total contract price, be paid to the City, its successors and assigns, for which payment will and truly to be made we bind ourselves, our heirs, executors, administrators, successors, and assigns, jointly and severally, firmly by these presents

THE CONDITION OF THIS OBLIGATION IS SUCH THAT, if bound Principal fails to make at its expense, in order to restore the work to full compliance with the requirements of the above-mentioned contract or any modifications or amendments thereto, any and all repairs and replacements made necessary by defects in materials or poor workmanship that become evident within one (1) year after the date of final payment to the Contractor, or if the Contractor fails to hold the City harmless from claims of any kind arising from damage due to said defects in materials or poor workmanship, then the Surety or sureties shall pay to the City and the City shall be entitled to retain and use the full amount of the Maintenance Bond set forth above, or any portion thereof sufficient to permit City or any contractors or subcontractors selected by the City to do the work in order to restore it to full compliance with the requirements of the contract or any modifications or amendments thereto, and sufficient to hold the City harmless from claims arising from defects in materials or poor workmanship; otherwise, the above obligations shall be void. If suit is brought to enforce the terms of this Maintenance Bond, the prevailing party shall be entitled to receive from the other party costs of suit, including reasonable attorneys' fees.

IN WITNESS WHEREOF, two (2) identical counterparts of this instrument, each of which shall for all purposes be deemed an original hereof, have been duly executed by Principal and Surety, on the date set forth below, the name of each corporate party being hereto affixed and these presents duly signed by its undersigned representative(s) pursuant to authority of its governing body.

Date:_____

"**Principal**"	**"Surety"**
_____	_____
_____	_____
By: _____	By: _____
Name: _____	Name: _____
Its: _____	Its: _____
By: _____	By: _____
Name: _____	Name: _____
Its: _____	Its: _____
(Seal)	(Seal)

CITY OF ROLLING HILLS

APPROVED AS TO SURETY AND PRINCIPAL AMOUNT	**APPROVED AS TO FORM**
By: _____	By: _____
Christian Horvath, Risk Manager	Patrick Donegan, City Attorney

Note: This bond must be executed in duplicate and dated. All signatures must be notarized, and evidence of the authority of any person signing as attorney-in-fact must be attached.

Exhibit H - Notice of Award of a Public Works Contract

CITY OF ROLLING HILLS

NOTICE OF AWARD OF PUBLIC WORKS CONTRACT

DATE: _____

_____

_____

_____

(Name, Address and Phone No. of Contractor)

NOTICE IS HEREBY GIVEN that the aforesaid contractor is the successful bidder for the **Tennis Court ADA Improvement Project, Job No. 2025-01,** as more particularly described in the plans and specifications therefore, and incorporated herein by reference, and is awarded the contract for the projects. Prior to signature of the Mayor to the contract, all applicable insurance certificates and bonds shall be provided to the City. **The aforesaid contractor acknowledges that the Contract shall be terminated and the bid bond forfeited if the contractor fails to provide the applicable insurance certificates and bonds within the time set forth in Section 21 of the Instructions to Bidders.**

CITY OF ROLLING HILLS

By: _____
Project Manager / Consulting Engineer

Exhibit I - Agreement

CONTRACT AGREEMENT

This Construction Agreement ("Agreement") is made and entered into as of the date executed by the Mayor and attested to by the City Clerk, by and between [INSERT CONTRACTOR NAME] (hereinafter referred to as "CONTRACTOR") and the City of Rolling Hills, California, a municipal corporation (hereinafter referred to as "CITY").

R E C I T A L S

A. Pursuant to the Notice Inviting Sealed Bids for [INSERT NAME OF PROJECT] (Project"),
bids were received, publicly opened, and declared on the date specified in the notice; and

B. On [INSERT DATE], City's City Council declared CONTRACTOR to be the lowest responsible bidder and accepted the bid of CONTRACTOR; and

C. The City Council has authorized the Mayor to execute a written contract with CONTRACTOR for furnishing labor, equipment and material for the [INSERT NUMBER], [INSERT PROJECT NAME] in the City of Rolling Hills.

NOW, THEREFORE, in consideration of the foregoing and the mutual covenants herein contained, it is agreed:

1. GENERAL SCOPE OF WORK: CITY agrees to engage CONTRACTOR and CONTRACTOR agrees to furnish all necessary labor, tools, materials, [INSERT PROJECT DESCRIPTION] in the City of Rolling Hills. The work shall be performed in accordance with the Plans and Specifications dated [INSERT DATE], (the "Specifications") on file in the office of the City Clerk and in accordance with bid prices set forth in CONTRACTOR'S Bid Proposal and in accordance with the instructions of the City.

2. INCORPORATED DOCUMENTS TO BE CONSIDERED COMPLEMENTARY: The contract documents for the aforesaid project shall consist of all the documents and exhibits in the Request for Bid and all referenced specifications, details, standard drawings, and appendices; together with this Agreement and all required bonds, insurance certificates, permits, notices and affidavits; and also, including any and all addenda or supplemental agreements clarifying, amending, or extending the work contemplated as may be required to insure its completion in an acceptable manner. All of the provisions of said contract documents are made a part hereof as though fully set forth herein. This contract is intended to require a complete and finished piece of work and anything necessary to complete the work properly and in accordance with the law and lawful governmental regulations shall be performed by CONTRACTOR whether set out specifically in the contract or not.

Should it be ascertained that any inconsistency exists between the aforesaid documents and this written agreement, the provisions of this Agreement shall govern. Collectively, these contract documents constitute the complete agreement between CITY and CONTRACTOR and supersede any previous agreements or understandings.

3. COMPENSATION: CONTRACTOR agrees to receive and accept the prices set forth in its Bid Proposal [INSERT VALUE] as full compensation for furnishing all materials, performing all work, and fulfilling all obligations hereunder. Said compensation shall cover all expenses, losses, damages, and consequences arising out of the nature of the work during its progress or prior to its acceptance including those for well and faithfully completing the work and the whole thereof in the manner and time specified in the aforesaid contract documents; and also including those arising from actions of the elements, unforeseen difficulties or obstructions encountered in the prosecution of the work, suspension or discontinuance of the work, and all other unknowns or risks of any description connected with the work.

4. TIME OF PERFORMANCE: CONTRACTOR agrees to complete the work within [INSERT VALUE] working days from the date of the notice to proceed. By signing this Agreement, CONTRACTOR represents to CITY that the contract time is reasonable for completion of the work and that CONTRACTOR will complete such work within the contract time.

5. LIQUIDATED DAMAGES: In accordance with Government Code section 53069.85, it is agreed that CONTRACTOR will pay to CITY the sum of be $1000/day for each and every calendar day of delay beyond the time prescribed in the Contract Documents for finishing the Work, as Liquidated Damages and not as a penalty or forfeiture. In the event this is not paid, CONTRACTOR agrees CITY may deduct that amount from any money due or that may become due CONTRACTOR under the Contract. This Article does not exclude recovery of other damages specified in the Contract Documents.

6. SUBSTITUTION OF SECURITIES: Pursuant to section 22300 of the Public Contract Code of the State of California, CONTRACTOR may request CITY to make retention payments directly to an escrow agent or may substitute securities for any money withheld by CITY to ensure performance under the contract. At the request and expense of CONTRACTOR, securities equivalent to the amount withheld shall be deposited with CITY or with a state or federally chartered bank as the escrow agent who shall return such securities to CONTRACTOR upon satisfactory completion of the contract. Deposit of securities with an escrow agent shall be subject to a written agreement substantially in the form provided in section 22300 of the Public Contract Code.

7. PREVAILING WAGES AND CALIFORNIA LABOR LAWS.

Pursuant to Labor Code §§ 1720 *et seq.*, and as specified in 8 California Code of Regulations § 16000 ("Prevailing Wage Laws"), CONTRACTOR must pay its workers prevailing wages. It is CONTRACTOR's responsibility to interpret and implement any prevailing wage requirements, and CONTRACTOR agrees to pay any penalty or civil damages resulting from a violation of the prevailing wage laws. CONTRACTOR shall defend, indemnify and hold the CITY, its officials, officers, employees and agents free and harmless from any claim or liability arising out of any failure or alleged failure to comply with the Prevailing Wage Laws. CONTRACTOR and any subcontractor shall forfeit a penalty of up to $200 per calendar day or portion thereof for each worker paid less than the prevailing wage rates.

In accordance with Labor Code § 1773.2, copies of the prevailing rate of per diem wages are available upon request from CITY's Engineering Division or the website for State of California Prevailing wage determination at http://www.dir.ca.gov/DLSR/PWD. CONTRACTOR must post a copy of the prevailing rate of per diem wages at the job site.

CITY directs CONTRACTOR's attention to Labor Code §§ 1777.5, 1777.6 and 3098 concerning the employment of apprentices by CONTRACTOR or any subcontractor.

Labor Code § 1777.5 requires CONTRACTOR or subcontractor employing tradesmen in any apprenticeship occupation to apply to the joint apprenticeship committee nearest the site of the public works project and which administers the apprenticeship program in that trade for a certificate of approval. The certificate must also fix the ratio of apprentices to journeymen that will be used in the performance of the contract. The ratio of apprentices to journeymen in such cases will not be less than one to five except:

When employment in the area of coverage by the joint apprenticeship committee has exceeded an average of 15 percent in the 90 days before the request for certificate, or

When the number of apprentices in training in the area exceeds a ratio of one to five, or

When the trade can show that it is replacing at least 1/30 of its membership through apprenticeship training on an annual basis state-wide or locally, or

Assignment of an apprentice to any work performed under a public works contract would create a condition that would jeopardize his or her life or the life, safety, or property of fellow employees or the public at large, or the specific task to which the apprentice is to be assigned is of a nature that training cannot be provided by a journeyman.

When CONTRACTOR provides evidence that CONTRACTOR employs registered apprentices on all of his contracts on an annual average of not less than one apprentice to eight journeymen.

CONTRACTOR is required to make contributions to funds established for the administration of apprenticeship programs if CONTRACTOR employs registered apprentices or journeymen in any apprenticeable trade on such contracts and if other contractors on the public works site are making such contributions.

CONTRACTOR and any subcontractor must comply with Labor Code §§ 1777.5 and 1777.6 in the employment of apprentices.

Information relative to apprenticeship standards, wage schedules and other requirements may be obtained from the Director of Industrial Relations, ex-officio the Administrator of Apprenticeship, San Francisco, California, or from the Division of Apprenticeship Standards and its branch offices.

The CONTRACTOR or any subcontractor that is determined by the Labor Commissioner to have knowingly violated Section 1777.5 shall forfeit as a civil penalty an amount not exceeding $100 for each full calendar day of noncompliance, or such greater amount as provided by law.

CONTRACTOR and each subcontractor shall keep an accurate payroll record, showing the name, address, social security number, work classification, straight time and overtime hours worked each day and week, and the actual per diem wages paid to each journeyman, apprentice, worker, or other employee employed by him or her in connection with the public work. The payroll records shall be certified and shall be available for inspection at all reasonable hours at the principal office of CONTRACTOR in the manner provided in Labor Code section 1776. In the event of noncompliance with the requirements of this section, CONTRACTOR shall have 10 days in which to comply subsequent to receipt of written notice specifying in what respects such CONTRACTOR must comply with this section. Should noncompliance still be evident after such 10-day period, CONTRACTOR shall, as a penalty to CITY, forfeit not more than $100.00 for each calendar day or portion thereof, for each worker, until strict compliance is effectuated. The amount of the forfeiture is to be determined by the Labor Commissioner. A contractor who is found to have violated the provisions of law regarding wages on Public Works with the intent to defraud shall be ineligible to bid on Public Works contracts for a period of one to three years as determined by the Labor Commissioner. Upon the request of the Division of Apprenticeship Standards or the Division of Labor Standards Enforcement, such penalties shall be withheld from progress payments then due. The responsibility for compliance with this section is on CONTRACTOR. The requirement to submit certified payroll records directly to the Labor Commissioner under Labor Code section 1771.4 shall not apply to work performed on a public works project that is exempt pursuant to the small project exemption specified in Labor Code Section 1771.4.

Any ineligible contractor or subcontractor pursuant to Labor Code Sections 1777.1 and 1777.7 may not perform work on this Project.

By executing this Contract, CONTRACTOR verifies that it fully complies with all requirements and restrictions of state and federal law respecting the employment of undocumented aliens, including, but not limited to, the Immigration Reform and Control Act of 1986, as may be amended from time to time, and shall require all subcontractors and sub-subcontractors to comply with the same.

8. LEGAL HOURS OF WORK: Eight (8) hours of labor shall constitute a legal day's work for all workmen employed in the execution of this contract, and CONTRACTOR and any subcontractor under it shall comply with and be governed by the laws of the State of California having to do with working hours set forth in Division 2, Part 7, Chapter 1, Article 3 of the Labor Code of the State of California as amended.

   CONTRACTOR shall forfeit, as a penalty to City, twenty-five dollars ($25.00) for each laborer, workman or mechanic employed in the execution of the contract, by him or any subcontractor under it, upon any of the work hereinbefore mentioned, for each calendar day during which the laborer, worker or mechanic is required or permitted to labor more than eight (8) hours in any one calendar day or 40 hours in any one calendar week in violation of the Labor Code.

9. PUBLIC WORKS CONTRACTOR REGISTRATION: Pursuant to Labor Code sections 1725.5 and 1771.1, all contractors and subcontractors that wish to bid on, be listed in a bid proposal, or enter into a contract to perform public work must be registered with the Department of Industrial Relations (DIR). No bid will be accepted nor any contract entered into without proof of the contractor's and subcontractors' current registration with the DIR to perform public work. Notwithstanding the foregoing, the contractor registration requirements mandated by Labor Code Sections 1725.5 and 1771.1 shall not apply to work performed on a public works project that is exempt pursuant to the small project exemption specified in Labor Code Sections 1725.5 and 1771.1.

10. LABOR COMPLIANCE AND STOP ORDERS: This Project is subject to compliance monitoring and enforcement by the DIR. It shall be CONTRACTOR's sole responsibility to evaluate and pay the cost of complying with all labor compliance requirements under this Contract and applicable law. Any stop orders issued by the DIR against CONTRACTOR or any subcontractor that affect CONTRACTOR's performance of Work, including any delay, shall be CONTRACTOR's sole responsibility. Any delay arising out of or resulting from such stop orders shall be considered CONTRACTOR caused delay subject to any applicable liquidated damages and shall not be compensable by the CITY. CONTRACTOR shall defend, indemnify and hold CITY, its officials, officers,

employees and agents free and harmless from any claim or liability arising out of stop orders issued by the DIR against CONTRACTOR or any subcontractor.

11. DEBARMENT OF CONTRACTORS AND SUBCONTRACTORS: Contractors or subcontractors may not perform work on a public works project with a subcontractor who is ineligible to perform work on a public project pursuant to Labor Code section 1777.1 or 1777.7. Any contract on a public works project entered into between a contractor and a debarred subcontractor is void as a matter of law. A debarred subcontractor may not receive any public money for performing work as a subcontractor on a public works contract. Any public money that is paid, or may have been paid to a debarred subcontractor by a contractor on the Project shall be returned to the CITY. CONTRACTOR shall be responsible for the payment of wages to workers of a debarred subcontractor who has been allowed to work on the project.

12. LABOR/EMPLOYMENT SAFETY: CONTRACTOR shall comply with all applicable laws and regulations of the federal, state, and local government, including Cal/OSHA requirements and requirements for verification of employees' legal right to work in the United States

    CONTRACTOR shall maintain emergency first aid treatment for its employees which complies with the Federal Occupational Safety and Health Act of 1970 (29 U.S.C. § 651 *et seq*.), and California Code of Regulations, Title 8, Industrial Relations Division 1, Department of Industrial Relations, Chapter 4. CONTRACTOR shall ensure the availability of emergency medical services for its employees in accordance with California Code of Regulations, Title 8, Section 1512.

    CONTRACTOR shall submit the Illness and Injury Prevention Program and a Project site specific safety program to CITY prior to beginning Work at the Project site. CONTRACTOR shall maintain a confined space program that meets or exceeds the CITY Standards. CONTRACTOR shall adhere to CITY's lock out tag out program

13. TRAVEL AND SUBSISTENCE PAY: CONTRACTOR agrees to pay travel and subsistence pay to each worker needed to execute the work required by this Agreement as such travel and subsistence payments are defined in the applicable collective bargaining agreements filed in accordance with Labor Code Section 1773.8.

14. CONTRACTOR'S LIABILITY: The City of Rolling Hills and its officers, agents and employees ("Indemnitees") shall not be answerable or accountable in any manner for any loss or damage that may happen to the work or any part thereof, or for any of the materials or other things used or employed in performing the work; or for injury or damage to any person or persons, either workers or employees of CONTRACTOR, of its subcontractors or the public, or for damage to adjoining or

other property from any cause whatsoever arising out of or in connection with the performance of the work. CONTRACTOR shall be responsible for any damage or injury to any person or property resulting from defects or obstructions or from any cause whatsoever.

To the fullest extent permitted by law, CONTRACTOR will indemnify Indemnities against and will hold and save Indemnitees harmless from any and all actions, claims, damages to persons or property, penalties, obligations or liabilities that may be asserted or claimed by any person, firm, entity, corporation, political subdivision, or other organization arising out of or in connection with the work, operation, or activities of CONTRACTOR, its agents, employees, subcontractors or invitees provided for herein, whether or not there is concurrent passive negligence on the part of City. In connection therewith:

a. CONTRACTOR will defend any action or actions filed in connection with any such claims, damages, penalties, obligations or liabilities and will pay all costs and expenses, including attorneys' fees, expert fees and costs incurred in connection therewith.

b. CONTRACTOR will promptly pay any judgment rendered against CONTRACTOR or Indemnitees covering such claims, damages, penalties, obligations and liabilities arising out of or in connection with such work, operations or activities of CONTRACTOR hereunder, and CONTRACTOR agrees to save and hold the Indemnitees harmless therefrom.

c. In the event Indemnitees are made a party to any action or proceeding filed or prosecuted against CONTRACTOR for damages or other claims arising out of or in connection with the work, operation or activities hereunder, CONTRACTOR agrees to pay to Indemnitees and any all costs and expenses incurred by Indemnitees in such action or proceeding together with reasonable attorneys' fees.

Contractor's obligations under this section apply regardless of whether or not such claim, charge, damage, demand, action, proceeding, loss, stop notice, cost, expense, judgment, civil fine or penalty, or liability was caused in part or contributed to by an Indemnitee. However, without affecting the rights of City under any provision of this agreement, to the extent required by Civil Code section 2782, Contractor shall not be required to indemnify and hold harmless City for liability attributable to the active negligence of City, provided such active negligence is determined by agreement between the parties or by the findings of a court of competent jurisdiction. In instances where City is shown to have been actively negligent and where City active negligence accounts for only a percentage of the liability involved, the obligation of Contractor will be for that entire portion or percentage of liability not attributable to the active negligence of City.

So much of the money due to CONTRACTOR under and by virtue of the contract as shall be considered necessary by City may be retained by City until disposition has been made of such actions or claims for damages as aforesaid.

It is expressly understood and agreed that the foregoing provisions are intended to be as broad and inclusive as is permitted by the law of the State of California. This indemnity provision shall survive the termination of the Agreement and is in addition to any other rights or remedies which Indemnitees may have under the law.

This indemnity is effective without reference to the existence or applicability of any insurance coverage which may have been required under this Agreement or any additional insured endorsements which may extend to Indemnitees.

CONTRACTOR, on behalf of itself and all parties claiming under or through it, hereby waives all rights of subrogation and contribution against the Indemnitees, while acting within the scope of their duties, from all claims, losses and liabilities arising out of or incident to activities or operations performed by or on behalf of the CONTRACTOR regardless of any prior, concurrent, or subsequent passive negligence by the Indemnitees.

15. THIRD PARTY CLAIMS. In accordance with Public Contract Code § 9201, CITY will promptly inform CONTRACTOR regarding third-party claims against CONTRACTOR, but in no event later than ten (10) business days after CITY receives such claims. Such notification will be in writing and forwarded in accordance with the “Notice” section of this Agreement. As more specifically detailed in the contract documents, CONTRACTOR agrees to indemnify and defend the City against any third-party claim.

16. WORKERS COMPENSATION: In accordance with California Labor Code Sections 1860 and 3700, CONTRACTOR and each of its subcontractors will be required to secure the payment of compensation to its employees. In accordance with the provisions of California Labor Code Section 1861, CONTRACTOR, by signing this contract, certifies as follows: "I am aware of the provisions of Section 3700 of the Labor Code which require every employer to be insured against liability for worker's compensation or to undertake self-insurance in accordance with the provisions of that code, and I will comply with such provisions before commencing the performance of the work of this contract.

17. INSURANCE: CONTRACTOR shall procure and maintain for the duration of the Agreement, and for 1 year thereafter, insurance against claims for injuries to persons or damages to property which may arise from or in connection with the performance of the work hereunder by the CONTRACTOR, its agents, representatives, employees, or subcontractors.

a. Minimum Scope and Limit of Insurance. Coverage shall be at least as broad as:

   i. Commercial General Liability (CGL): Insurance Services Office (ISO) Form CG 00 01 covering CGL on an "occurrence" basis, including products and completed operations, property damage, bodily injury and personal & advertising injury with limits no less than $5,000,000 per occurrence. If a general aggregate limit applies, either the general aggregate limit shall apply separately to this project/location (ISO CG 25 03 or 25 04) or the general aggregate limit shall be twice the required occurrence limit.

   ii. Automobile Liability: Insurance Services Office Form CA 0001 covering Code 1 (any auto), with limits no less than $5,000,000 per accident for bodily injury and property damage.

   iii. Workers' Compensation insurance as required by the State of California, with Statutory Limits, and Employers' Liability insurance with a limit of no less than $1,000,000 per accident for bodily injury or disease.

   iv. Builder's Risk (Course of Construction) insurance utilizing an "All Risk" (Special Perils) coverage form, with limits equal to the completed value of the project and no coinsurance penalty provisions.

   v. Professional Liability (if Design/Build), with limits no less than $2,000,000 per occurrence or claim, and $2,000,000 policy aggregate.

   vi. Contractors' Pollution Legal Liability and/or Asbestos Legal Liability and/or Errors and Omissions (if project involves environmental hazards) with limits no less than $1,000,000 per occurrence or claim, and $2,000,000 policy aggregate.

   vii. If the contractor maintains broader coverage and/or higher limits than the minimums shown above, the CITY requires and shall be entitled to the broader coverage and/or the higher limits maintained by CONTRACTOR. Any available insurance proceeds in excess of the specified minimum limits of insurance and coverage shall be available to the CITY.

b. Self-Insured Retentions. Self-insured retentions must be declared to and approved by the CITY. At the option of the CITY, either: the CONTRACTOR shall obtain coverage to reduce or eliminate such self-insured retentions as respects the CITY, its officers, officials, employees, and volunteers; or the CONTRACTOR shall provide a financial guarantee satisfactory to the CITY guaranteeing payment of losses and related investigations, claim administration, and defense expenses. The policy language shall provide, or be endorsed to provide, that the self-insured retention may be satisfied by either the named insured or CITY.

c. Other Insurance Provisions. The insurance policies are to contain, or be endorsed to contain, the following provisions:

i. The CITY, its officers, officials, employees, and volunteers are to be covered as additional insureds on the CGL policy with respect to liability arising out of work or operations performed by or on behalf of the CONTRACTOR including materials, parts, or equipment furnished in connection with such work or operations and automobiles owned, leased, hired, or borrowed by or on behalf of the CONTRACTOR. General liability coverage can be provided in the form of an endorsement to the CONTRACTOR's insurance (at least as broad as ISO Form CG 20 10, CG 11 85 or both CG 20 10, CG 20 26, CG 20 33, or CG 20 38; and CG 20 37 forms if later revisions used).

ii. For any claims related to this project, the CONTRACTOR's insurance coverage shall be primary insurance coverage at least as broad as ISO CG 20 01 04 13 as respects the CITY, its officers, officials, employees, and volunteers. Any insurance or self-insurance maintained by the CITY, its officers, officials, employees, or volunteers shall be excess of the CONTRACTOR's insurance and shall not contribute with it.

iii. Each insurance policy required by this clause shall provide that coverage shall not be canceled, except with notice to the CITY.

d. Builder's Risk (Course of Construction) Insurance.

i. CONTRACTOR may submit evidence of Builder's Risk insurance in the form of Course of Construction coverage. Such coverage shall name the CITY as a loss payee as their interest may appear.

ii. If the Project does not involve new or major reconstruction, at the option of the CITY, an Installation Floater may be acceptable. For such projects, a Property Installation Floater shall be obtained that provides for the improvement, remodel, modification, alteration, conversion or adjustment to existing buildings, structures, processes, machinery, and equipment. The Property Installation Floater shall provide property damage coverage for any building, structure, machinery or equipment damaged, impaired, broken, or destroyed during the performance of the Work, including during transit, installation, and testing at the CITY's site.

e. Claims Made Policies. If any coverage required is written on a claims-made coverage form:

i. The retroactive date must be shown, and this date must be before the execution date of the contract or the beginning of contract work.

ii. Insurance must be maintained and evidence of insurance must be provided for at least five (5) years after completion of contract work.

iii. If coverage is cancelled or non-renewed, and not replaced with another claims-made policy form with a retroactive date prior to the contract effective, or start of work date, the CONTRACTOR must purchase extended reporting period coverage for a minimum of five (5) years after completion of contract work.

iv. A copy of the claims reporting requirements must be submitted to the CITY for review.

v. If the services involve lead-based paint or asbestos identification/remediation, the Contractors Pollution Liability policy shall not contain lead-based paint or asbestos exclusions. If the services involve mold identification/remediation, the Contractors Pollution Liability policy shall not contain a mold exclusion, and the definition of Pollution shall include microbial matter, including mold.

f. Acceptability of Insurers. Insurance is to be placed with insurers authorized to conduct business in the state with a current A.M. Best rating of no less than A: VII, unless otherwise acceptable to the CITY.

g. Waiver of Subrogation. CONTRACTOR hereby agrees to waive rights of subrogation which any insurer of CONTRACTOR may acquire from CONTRACTOR by virtue of the payment of any loss. CONTRACTOR agrees to obtain any endorsement that may be necessary to affect this waiver of subrogation. The Workers' Compensation policy shall be endorsed with a waiver of subrogation in favor of the CITY for all work performed by the CONTRACTOR, its employees, agents and subcontractors.

h. Verification of Coverage. CONTRACTOR shall furnish the CITY with original Certificates of Insurance including all required amendatory endorsements (or copies of the applicable policy language effecting coverage required by this clause) and a copy of the Declarations and Endorsement Page of the CGL policy listing all policy endorsements to CITY before work begins. However, failure to obtain the required documents prior to the work beginning shall not waive the CONTRACTOR's obligation to provide them. The CITY reserves the right to require complete, certified copies of all required insurance policies, including endorsements, required by these specifications, at any time.

i. Subcontractors. CONTRACTOR shall require and verify that all subcontractors maintain insurance meeting all requirements stated herein, and CONTRACTOR shall ensure that CITY is an additional insured on insurance required from subcontractors. For CGL coverage, subcontractors shall provide coverage with a form at least as broad as CG 20 38 04 13.

j. Special Risks or Circumstances. CITY reserves the right to modify these requirements, including limits, based on the nature of the risk, prior experience, insurer, coverage, or other circumstances.

18. ASSIGNMENT: This contract is not assignable nor the performance of either party's duties delegable without the prior written consent of the other party. Any attempted or purported assignment or delegation of any of the rights of obligations of either party without the prior written consent of the other shall be void and of no force and effect.

19. INDEPENDENT CONTRACTOR: CONTRACTOR is and shall at all times remain as to the CITY, a wholly independent contractor. Neither the CITY nor any of its agents shall have control of the conduct of CONTRACTOR or any of CONTRACTOR'S employees, except as herein set forth. CONTRACTOR shall not at any time or in any manner represent that it or any of its agents or employees are in any manner agents or employees of CITY.

20. TAXES: CONTRACTOR is responsible for paying all retail sales and use, transportation, export, import, special or other taxes and duties applicable to, and assessable against any work, materials, equipment, services, processes and operations incidental to or involved in this contract. CONTRACTOR is responsible for ascertaining and arranging to pay them. The prices established in the contract shall include compensation for any taxes CONTRACTOR is required to pay by laws and regulations in effect at the bid opening date.

21. LICENSES: CONTRACTOR represents and warrants to CITY that it has all licenses, permits, qualifications, insurance, and approvals of whatsoever nature which are legally required of CONTRACTOR to practice its profession. CONTRACTOR represents and warrants to CITY that CONTRACTOR shall, at its sole cost and expense, keep in effect or obtain at all times during the term of this Agreement any licenses, permits, insurance, and approvals which are legally required of CONTRACTOR to practice its profession.

    Contractors are required by law to be licensed and regulated by the Contractors' State License Board which has jurisdiction to investigate complaints against contractors if a complaint regarding a patent act or omission is filed within five (5) years of the date of the alleged violation. A complaint regarding a latent act or omission pertaining to structural defects must be filed within ten (10) years of the date of the alleged violation. Any questions concerning a contractor may be referred to the Registrar, Contractors' State License Board, P.O. Box 26000, Sacramento, California 95826.

22. RECORDS: CONTRACTOR shall maintain accounts and records, including personnel, property, and financial records, adequate to identify and account for all costs pertaining to this Agreement and such other records as may be deemed necessary by CITY or any authorized representative, and will be retained for four years after the expiration of this Agreement. All such records shall be made available for inspection or audit by CITY at any time during regular business hours.

23. SEVERABILITY: If any portion of these contract documents are declared by a court of competent jurisdiction to be invalid or unenforceable, then such portion will

be deemed modified to the extent necessary in the opinion of the court to render such portion enforceable and, as so modified, such portion and the balance of this Agreement will continue in full force and effect.

24. WHOLE AGREEMENT: This Agreement supersedes any and all other agreements either oral or written, between the parties and contains all of the covenants and agreements between the parties pertaining to the work of improvements described herein. Each party to this contract acknowledges that no representations, inducements, promises or agreements, orally or otherwise, have been made by any party, or anyone acting on behalf of any party, which are not embodied herein, and that any other agreement, statements or promise not contained in this contract shall not be valid or binding. Any modifications of this contract will be effective only if signed by the party to be charged.

25. AUTHORITY: CONTRACTOR affirms that the signatures, titles, and seals set forth hereinafter in execution of this Agreement represent all individuals, firm members, partners, joint ventures, and/or corporate officers having a principal interest herein. Each party warrants that the individuals who have signed this Agreement have the legal power, right, and authority to make this Agreement and to bind each respective party. This Agreement may be modified by written amendment. CITY's city manager may execute any such amendment on CITY's behalf.

26. NOTICES: All notices permitted or required under this Agreement shall be in writing, and shall be deemed made when delivered to the applicable party's representative as provided in this Agreement. Additionally, such notices may be given to the respective parties at the following addresses, or at such other addresses as the parties may provide in writing for this purpose. Such notices shall be deemed made when personally delivered or when mailed forty-eight (48) hours after deposit in the U.S. mail, first-class postage prepaid, and addressed to the party at its applicable address.

CITY OF ROLLING HILLS
2 Portuguese Bend Rd.
Rolling Hills, CA 90274

Attention: _____ Project Manager

CONTRACTOR:

_____

_____

Attention: _____

27. DISPUTES: Effective January 1, 1991, Section 20104 et seq., of the California Public Contract Code prescribes a process utilizing informal conferences, non-binding judicial supervised mediation, and judicial arbitration to resolve disputes on construction claims of $375,000 or less. Effective January 1, 2017, Section 9204 of the Public Contract Code prescribes a process for negotiation and mediation to resolve disputes on construction claims. The intent of this Section is to implement Sections 20104 et seq. and Section 9204 of the California Public Contract Code. This Section shall be construed to be consistent with said statutes.

Claims: For purposes of this Section, "Claim" means a separate demand by CONTRACTOR, after a change order duly requested in accordance with the terms of this Contract has been denied by the CITY, for (A) a time extension, (B) payment of money or damages arising from Work done by or on behalf of CONTRACTOR pursuant to the Contract, or (C) an amount the payment of which is disputed by the CITY. A "Claim" does not include any demand for payment for which CONTRACTOR has failed to provide notice, request a change order, or otherwise failed to follow any procedures contained in the Contract Documents. Claims governed by this Section may not be filed unless and until CONTRACTOR completes all procedures for giving notice of delay or change and for the requesting of a time extension or change order, including but not necessarily limited to the change order procedures contained herein, and CONTRACTOR's request for a change has been denied in whole or in part. Claims governed by this Section must be filed no later than fourteen (14) days after a request for change has been denied in whole or in part or after any other event giving rise to the Claim. The Claim shall be submitted in writing to the CITY and shall include on its first page the following in 16 point capital font: "THIS IS A CLAIM." Furthermore, the claim shall include the documents necessary to substantiate the claim. Nothing in this Section is intended to extend the time limit or supersede notice requirements otherwise provided by contract for the filing of claims, including all requirements pertaining to compensation or payment for extra Work, disputed Work, and/or changed conditions. Failure to follow such contractual requirements shall bar any claims or subsequent lawsuits for compensation or payment thereon.

Supporting Documentation: The CONTRACTOR shall submit all claims in the following format:

Summary of claim merit and price, reference Contract Document provisions pursuant to which the claim is made

List of documents relating to claim:

- Specifications
- Drawings
- Clarifications (Requests for Information)
- Schedules
- Other

Chronology of events and correspondence

Analysis of claim merit

Analysis of claim cost

Time impact analysis in CPM format

If CONTRACTOR's claim is based in whole or in part on an allegation of errors or omissions in the Drawings or Specifications for the Project, CONTRACTOR shall provide a summary of the percentage of the claim subject to design errors or omissions and shall obtain a certificate of merit in support of the claim of design errors and omissions.

Cover letter and certification of validity of the claim, including any claims from subcontractors of any tier, in accordance with Government Code section 12650 *et seq*.

City's Response. Upon receipt of a claim pursuant to this Section, CITY shall conduct a reasonable review of the claim and, within a period not to exceed 45 days, shall provide CONTRACTOR a written statement identifying what portion of the claim is disputed and what portion is undisputed. Any payment due on an undisputed portion of the claim will be processed and made within 60 days after the public entity issues its written statement.

If CITY needs approval from its governing body to provide the CONTRACTOR a written statement identifying the disputed portion and the undisputed portion of the claim, and the governing body does not meet within the 45 days or within the mutually agreed to extension of time following receipt of a claim sent by registered mail or certified mail, return receipt requested, CITY shall have up to three days following the next duly publicly noticed meeting of the governing body after the 45-day period, or extension, expires to provide CONTRACTOR a written statement identifying the disputed portion and the undisputed portion.

Within 30 days of receipt of a claim, CITY may request in writing additional documentation supporting the claim or relating to defenses or claims CITY may have against the CONTRACTOR. If additional information is thereafter required, it shall be requested and provided pursuant to this subdivision, upon mutual agreement of CITY and the CONTRACTOR.

CITY's written response to the claim, as further documented, shall be submitted to CONTRACTOR within 30 days (if the claim is less than $50,000, within 15 days) after receipt of the further documentation, or within a period of time no greater than that taken by CONTRACTOR in producing the additional information or requested documentation, whichever is greater.

Meet and Confer. If the CONTRACTOR disputes CITY's written response, or CITY fails to respond within the time prescribed, the CONTRACTOR may so notify CITY, in writing, either within 15 days of receipt of CITY's response or within 15 days of CITY's failure to respond within the time prescribed, respectively, and demand an informal conference to

meet and confer for settlement of the issues in dispute. Upon receipt of a demand, CITY shall schedule a meet and confer conference within 30 days for settlement of the dispute.

Mediation. Within 10 business days following the conclusion of the meet and confer conference, if the claim or any portion of the claim remains in dispute, CITY shall provide the CONTRACTOR a written statement identifying the portion of the claim that remains in dispute and the portion that is undisputed. Any payment due on an undisputed portion of the claim shall be processed and made within 60 days after CITY issues its written statement. Any disputed portion of the claim, as identified by CONTRACTOR in writing, shall be submitted to nonbinding mediation, with CITY and CONTRACTOR sharing the associated costs equally. CITY and CONTRACTOR shall mutually agree to a mediator within 10 business days after the disputed portion of the claim has been identified in writing unless the parties agree to select a mediator at a later time.

If the Parties cannot agree upon a mediator, each Party shall select a mediator and those mediators shall select a qualified neutral third party to mediate with regard to the disputed portion of the claim. Each Party shall bear the fees and costs charged by its respective mediator in connection with the selection of the neutral mediator.

For purposes of this section, mediation includes any nonbinding process, including, but not limited to, neutral evaluation or a dispute review board, in which an independent third party or board assists the Parties in dispute resolution through negotiation or by issuance of an evaluation. Any mediation utilized shall conform to the timeframes in this section.

Unless otherwise agreed to by CITY and CONTRACTOR in writing, the mediation conducted pursuant to this section shall excuse any further obligation under Section 20104.4 to mediate after litigation has been commenced.

The mediation shall be held no earlier than the date CONTRACTOR completes the Work or the date that CONTRACTOR last performs Work, whichever is earlier. All unresolved claims shall be considered jointly in a single mediation unless a new unrelated claim arises after mediation is completed.

Procedures After Mediation. If following the mediation, the claim or any portion remains in dispute, CONTRACTOR must file a claim pursuant to Chapter 1 (commencing with Section 900) and Chapter 2 (commencing with Section 910) of Part 3 of Division 3.6 of Title 1 of the Government Code. For purposes of those provisions, the running of the period of time within which a claim must be filed shall be tolled from the time CONTRACTOR submits his or her written claim pursuant to subdivision (a) until the time the claim is denied, including any period of time utilized by the meet and confer conference or mediation.

Civil Actions. The following procedures are established for all civil actions filed to resolve claims subject to this Section:

Within 60 days, but no earlier than 30 days, following the filing or responsive pleadings, the court shall submit the matter to non-binding mediation unless waived by mutual stipulation of both parties or unless mediation was held prior to commencement of the action in accordance with Public Contract Code section 9204 and the terms of these procedures. The mediation process shall provide for the selection within 15 days by both parties of a disinterested third person as mediator, shall be commenced within 30 days of the submittal, and shall be concluded within 15 days from the commencement of the mediation unless a time requirement is extended upon a good cause showing to the court.

If the matter remains in dispute, the case shall be submitted to judicial arbitration pursuant to Chapter 2.5 (commencing with Section 1141.10) of Title 3 of Part 3 of the Code of Civil Procedure, notwithstanding Section 1114.11 of that code. The Civil Discovery Act of 1986 (Article 3 (commencing with Section 2016) of Chapter 3 of Title 3 of Part 4 of the Code of Civil Procedure) shall apply to any proceeding brought under this subdivision consistent with the rules pertaining to judicial arbitration.

In addition to Chapter 2.5 (commencing with Section 1141.10) of Title 3 of Part 3 of the Code of Civil Procedure, (A) arbitrators shall, when possible, be experienced in construction law, and (B) any party appealing an arbitration award who does not obtain a more favorable judgment shall, in addition to payment of costs and fees under that chapter, also pay the attorney's fees on appeal of the other party.

Government Code Claims. In addition to any and all contract requirements pertaining to notices of and requests for compensation or payment for extra work, disputed work, claims and/or changed conditions, CONTRACTOR must comply with the claim procedures set forth in Government Code sections 900 et seq. prior to filing any lawsuit against the CITY. Such Government Code claims and any subsequent lawsuit based upon the Government Code claims shall be limited to those matters that remain unresolved after all procedures pertaining to extra work, disputed work, claims, and/or changed conditions have been followed by CONTRACTOR. If no such Government Code claim is submitted, or if any prerequisite contractual requirements are not otherwise satisfied as specified herein, CONTRACTOR shall be barred from bringing and maintaining a valid lawsuit against the CITY. A Government Code claim must be filed no earlier than the date the work is completed or the date CONTRACTOR last performs work on the Project, whichever occurs first. A Government Code claim shall be inclusive of all unresolved claims unless a new unrelated claim arises after the Government Code claim is submitted.

Non-Waiver. CITY's failure to respond to a claim from CONTRACTOR within the time periods described in this Section or to otherwise meet the time requirements of this Section shall result in the claim being deemed rejected in its entirety. CITY's failure to respond shall not waive CITY's rights to any subsequent procedures for the resolution of disputed claims.

28. NON-DISCRIMINATION: Contractor represents that it is an equal opportunity employer and that it shall not discriminate against any employee or applicant for employment because of race, religion, color, national origin, ancestry, sex, age or other interests protected by the State or Federal Constitutions. Such non-discrimination shall include, but not be limited to, all activities related to initial employment, upgrading, demotion, transfer, recruitment or recruitment advertising, layoff or termination. A violation of this section exposes CONTRACTOR to the penalties provided for in Labor Code Section 1735.

29. TERMINATION: This Contract may be terminated by CITY at any time, either with our without cause, by giving CONTRACTOR three (3) days advance written notice. In the event of termination by CITY for any reason other than the fault of CONTRACTOR, CITY shall pay CONTRACTOR for all Work performed up to that time as provided herein. In the event of breach of the Contract by Contractor, CITY may terminate the Contract immediately without notice, may reduce payment to CONTRACTOR in the amount necessary to offset CITY's resulting damages, and may pursue any other available recourse against CONTRACTOR. CONTRACTOR may not terminate this Contract except for cause. In the event this Contract is terminated in whole or in part as provided, CITY may procure, upon such terms and in such manner as it may determine appropriate, services similar to those terminated. Further, if this Contract is terminated as provided, CITY may require CONTRACTOR to provide all finished or unfinished documents, data, diagrams, drawings, materials or other matter prepared or built by CONTRACTOR in connection with its performance of this Contract.

30. ANTI-TRUST CLAIMS: This provision shall be operative if this Contract Agreement is applicable to California Public Contract Code Section 7103.5. In entering into this Contract Agreement to supply goods, services or materials, Contractor hereby offers and agrees to assign to the Agency all rights, title, and interest in and to all causes of action it may have under Section 4 of the Clayton Act (15 U.S.C. Section 15) or under the Cartwright Act (Chapter 2, commencing with Section 16700, of Part 2 of Division 7 of the Business and Professions Code) arising from purchases of goods, services, or materials pursuant to the Contract Agreement. This assignment shall be made and become effective at the time the Agency tender final payment to Contractor, without further acknowledgment by the Parties.

31. NO THIRD PARTY BENEFICIARY: This Contract and every provision herein is for the exclusive benefit of the Contractor and the City and not for the benefit of any other party. There will be no incidental or other beneficiaries of any of the Contractor's or the City's obligations under this Contract.

32. TIME IS OF ESSENCE: Time is of the essence for each and every provision of the Contract Documents.

33. FORCE MAJEURE: If CONTRACTOR is delayed in the performance or progress of the work by a Force Majeure Event, then the CONTRACTOR shall be entitled

to a time extension, as provided in the contract documents, when the work stopped is on the critical path and shall not be charged liquidated damages. Such a non-compensable adjustment shall be CONTRACTOR's sole and exclusive remedy for such delays and the CONTRACTOR will not receive an adjustment to the contract price or any other compensation. Contractor must submit a timely request in accordance with the requirements of the contract documents. A Force Majeure Event shall mean an event that materially affects a party's performance and is one or more of the following: (1) Acts of God or other natural disasters occurring at the project site; (2) terrorism or other acts of a public enemy; (3) orders of governmental authorities (including, without limitation, unreasonable and unforeseeable delay in the issuance of permits or approvals by governmental authorities that are required for the work); (4) pandemics, epidemics or quarantine restrictions; and (5) strikes and other organized labor action occurring at the project site and the effects thereof on the work, only to the extent such strikes and other organized labor action are beyond the control of CONTRACTOR and its subcontractors, of every tier, and to the extent the effects thereof cannot be avoided by use of replacement workers. For purposes of this section, "orders of governmental authorities," includes ordinances, emergency proclamations and orders, rules to protect the public health, welfare and safety, and other actions of the City in its capacity as a municipal authority.

34. PROVISIONS REQUIRED BY LAW AND CONTRACTOR COMPLIANCE: Each and every provision of law required to be included in these Contract Documents shall be deemed to be included in these Contract Documents. The Contractor shall comply with all requirements of applicable federal, state and local laws, rules and regulations, including, but not limited to, the provisions of the California Labor Code and California Public Contract Code which are applicable to this Work.

35. ACCEPTANCE OF FACSIMILE SIGNATURES: The Parties agree that this Contract, agreements ancillary to this Contract, and related documents to be entered into in connection with this Contract will be considered signed when the signature of a party is delivered by facsimile transmission. Such facsimile signature will be treated in all respects as having the same effect as an original signature.

36. GOVERNING LAW: This Agreement shall be governed by the laws of the State of California, and exclusive venue for any action involving this Contract will be in Los Angeles County.

IN WITNESS WHEREOF, the parties hereto have executed this Agreement with all the formalities required by law on the respective dates set forth opposite their signatures.

State of California
CONTRACTOR'S License No. _____

CONTRACTOR

_____

_____

_____ By:_____
Date TITLE

CITY OF ROLLING HILLS, CALIFORNIA

_____ By: _____
Date JEFF PIEPER, MAYOR

ATTEST:

_____ By: _____
Date CHRISTIAN HORVATH, CITY CLERK

CONTRACTOR'S Business Phone _____

Emergency Phone at which CONTRACTOR can be reached at any time:

(____)_____

APPROVED AS TO FORM:

_____
PATRICK DONEGAN, CITY ATTORNEY

_____
Date

AGREEMENT OF INDEMNIFICATION
AND HOLD HARMLESS AND WAIVER OF SUBROGATION AND CONTRIBUTION

DESCRIBE PROJECT

Contract/Agreement/License/Permit No. or description:_____

_____

Indemnitor(s) (list all names):

To the fullest extent permitted by law, Indemnitor hereby agrees, at its sole cost and expense, to defend, protect, indemnify, and hold harmless the City of Rolling Hills and its respective elected officials, officers, attorneys, agents, employees, volunteers, successors, and assigns (collectively "Indemnitees") from and against any and all damages, costs, expenses, liabilities, claims, demands, causes of action, proceedings, expenses, judgments, penalties, liens, and losses of any nature whatsoever, including fees of accountants, attorneys, or other professionals and all costs associated therewith (collectively "Liabilities"), arising or claimed to arise, directly or indirectly, out of, in connection with, resulting from, or related to any act, failure to act, error, or omission of Indemnitor or any of its officers, agents, servants, employees, subcontractors, materialmen, suppliers or their officers, agents, servants or employees, arising or claimed to arise, directly or indirectly, out of, in connection with, resulting from, or related to the above-referenced contract, agreement, license, or permit (the "Agreement") or the performance or failure to perform any term, provision, covenant, or condition of the Agreement, including this indemnity provision. This indemnity provision is effective regardless of any prior, concurrent, or subsequent active or passive negligence by Indemnitees and shall operate to fully indemnify Indemnitees against any such negligence. This indemnity provision shall survive the termination of the Agreement and is in addition to any other rights or remedies which Indemnitees may have under the law. Payment is not required as a condition precedent to an Indemnitee's right to recover under this indemnity provision, and an entry of judgment against an Indemnitee shall be conclusive in favor of the Indemnitee's right to recover under this indemnity provision. Indemnitor shall pay Indemnitees for any attorney fees and costs incurred in enforcing this indemnification provision. Notwithstanding the foregoing, nothing in this instrument shall be construed to encompass (a) Indemnitees' sole negligence or willful misconduct to the limited extent that the underlying Agreement is subject to Civil Code 2782(a), or (b) the contracting public agency's active negligence to the limited extent that the underlying Agreement is subject to Civil Code 2782(b). This indemnity is effective without reference to the existence or applicability of any insurance coverages which may have been required under the Agreement or any additional insured endorsements which may extend to Indemnitees.

Indemnitor, on behalf of itself and all parties claiming under or through it, hereby waives all rights of subrogation and contribution against the Indemnitees, while acting within the scope of their duties, from all claims, losses and liabilities arising out of or incident to

activities or operations performed by or on behalf of the Indemnitor regardless of any prior, concurrent, or subsequent active or passive negligence by the Indemnitees. Accountants, attorneys, or other professionals employed by Indemnitor to defend Indemnitees shall be selected by Indemnitees.

In the event there is more than one person or entity named in the Agreement as an Indemnitor, then all obligations, liabilities, covenants and conditions under this instrument shall be joint and several.

“Indemnitor”

Name_____ Name _____

By:_____ By:_____

Exhibit J - Notice to Proceed

CITY OF ROLLING HILLS

NOTICE TO PROCEED

DATE: _____

_____

_____

_____

(Name, Address and Phone No. of Contractor)

NOTICE IS HEREBY GIVEN that the aforesaid contractor is hereby authorized to proceed with the **Tennis Court ADA Improvement Project, Job No. 2025-01**, as more particularly described in the plans and specifications therefore, and incorporated herein by reference, starting _____.

Unless otherwise provided, the contract time shall commence on said _____, and work shall be diligently prosecuted to completion within the time provided in Article 3.

CITY OF ROLLING HILLS

By: _____
Project Manager / Consulting Engineer

Contractor's Waiver and Affidavit

(Individual)

STATE OF CALIFORNIA)
) SS
COUNTY OF LOS ANGELES)

_____

First being duly sworn, deposes and says:

That he/she, as general contractor on _____ , entered into a written contract with the City of Rolling Hills, as owner, for the construction of the **Tennis Court ADA Improvement Project, Job No. 2025-01**, in the City of Rolling Hills, County of Los Angeles, State of California.

That said improvement was fully completed on _____.

That all bills for labor and/or material furnished in connection with the construction of said buildings and work of improvements have been fully paid;

That said affiant further certifies and declares that he/she will testify or depose before any competent tribunal, officer, or person, in any case now pending or hereafter instituted, to the truth of the foregoing statements and each of them.

_____
Contractor or Contractor's Authorized Agent

SUBSCRIBED AND SWORN TO BEFORE ME

ON _____

_____
Notary Public in and for the County of
Los Angeles, State of California

Place Notary Seal Above

Exhibit L - Notice of Acceptance

CITY OF ROLLING HILLS

NOTICE OF ACCEPTANCE

DATE: _____

_____

_____

_____

(Name, Address and Phone No. of Contractor)

NOTICE IS HEREBY GIVEN that the aforesaid contractor has satisfactorily completed the **Tennis Court ADA Improvement Project, Job No. 2025-01**, in accordance with the project plans, specifications, and authorized changes, and that at its regular meeting held on _____, 20___, Rolling Hills City Council formally accepted said project as satisfactorily completed.

The release of retention will be 35 days from the date of the Notice of Acceptance.

CITY OF ROLLING HILLS

By: _____
Project Manager / Consulting Engineer

Exhibit M - Notice of Completion

RECORDING REQUESTED BY:

CITY OF ROLLING HILLS
2 PORTUGUESE BEND ROAD
ROLLING HILLS, CA 90274

WHEN RECORDED MAIL TO:

CITY OF ROLLING HILLS
2 PORTUGUESE BEND ROAD
ROLLING HILLS, CA 90274

SPACE ABOVE THIS LINE RESERVED FOR RECORDER'S USE

CITY OF ROLLING HILLS

NOTICE OF COMPLETION

NOTICE IS HEREBY GIVEN:

1. The City of Rolling Hills is the Owner of that certain public improvement known as the **Tennis Court ADA Improvement Project, Job No. 2025-01.**
2. Owner's address is: 2 Portuguese Bend Road, Rolling Hills, California 90274.
3. Work was completed on the said public improvement and was accepted by the City on.
4. The Contractor on said job was _____ of _____, California per contract dated _____. Kindly refer to _____ on all matters relating to said contract.
5. The property on which said work of improvement was completed is in the City of Rolling Hills, County of Los Angeles, State of California and is described as the **City Hall ADA Improvements Project, Job No. XXXXX** located at 2 Portuguese Bend Road, Rolling Hills, California 90277.

_____ _____
Dated Karina Banales, City Manager

VERIFICATION

The undersigned says: I am the City Manager of the City of Rolling Hills, California, the Declarant of the foregoing Notice of Completion, that said City being the owner of the aforesaid interest or estate in the property described in the foregoing notice; that I have read the same and know the contents thereof, and the same is true to my own knowledge. I declare under penalty of perjury that the foregoing is true and correct.

_____ _____
Dated Karina Banales, City Manager

Project Plans

A – CL_BID_250113_2025-01_GR2301100001_ApprovedGradingPlans.pdf

B - CL_BID_250113_2025-01_ZC23-071_RetainingWalls_Approved.pdf

C - CL_BID_250113_2025-01_RHCA_TC_CabanaArch_Approved.pdf

D - CL_BID_250113_2025-01_RHCA_TC_CabanaStructure_Approved.pdf

E - CL_BID_250113_2025-01_RHCA_TC_Cabana_ElectricalSet.pdf

F - CL_BID_250113_2025-01_RHCA_TC_Cabana_PlumbingSet.pdf

G - CL_BID_250113_2025-01_RHCA_TC_LandscapeSet_24x36.pdf

H – CL_BID_250113_2025-01_PBR-RHR_8inchMain_SewerImprvmntPlans.pdf

Attachment A

GENERAL NOTES

1. ALL GRADING AND CONSTRUCTION SHALL CONFORM TO THE 2023 COUNTY OF LOS ANGELES BUILDING CODES AND THE STATE MODEL WATER EFFICIENCY LANDSCAPE ORDINANCE UNLESS SPECIFICALLY NOTED ON THESE PLANS.
2. ANY MODIFICATIONS OF OR CHANGES TO APPROVED GRADING PLANS MUST BE APPROVED BY THE BUILDING OFFICIAL
3. NO GRADING SHALL BE STARTED WITHOUT FIRST NOTIFYING THE BUILDING OFFICIAL. A PRE-GRADING MEETING AT THE SITE IS REQUIRED BEFORE THE START OF THE GRADING WITH THE FOLLOWING PEOPLE PRESENT: OWNER, GRADING CONTRACTOR, DESIGN CIVIL ENGINEER, SOILS ENGINEER, GEOLOGIST, COUNTY GRADING INSPECTOR(S) OR THEIR REPRESENTATIVES, AND WHEN REQUIRED THE ARCHEOLOGIST OR OTHER JURISDICTIONAL AGENCIES. PERMITTEE OR HIS AGENT ARE RESPONSIBLE FOR ARRANGING PRE-GRADE MEETING AND MUST NOTIFY THE BUILDING OFFICIAL AT LEAST TWO BUSINESS DAYS PRIOR TO PROPOSED PRE-GRADING MEETING.
4. APPROVAL OF THESE PLANS REFLECT SOLELY THE REVIEW OF PLANS IN ACCORDANCE WITH THE LOS ANGELES COUNTY BUILDING CODE AND DOES NOT REFLECT ANY POSITION BY THE COUNTY OF LOS ANGELES OF THE DEPARTMENT OF PUBLIC WORKS REGARDING THE STATUS OF ANY TITLE ISSUES RELATING TO THE LAND ON WHICH THE IMPROVEMENTS MAY BE CONSTRUCTED. ANY DISPUTES RELATING TO TITLE ARE SOLELY A PRIVATE MATTER NOT INVOLVING THE COUNTY OF LOS ANGELES OR THE DEPARTMENT OF PUBLIC WORKS.
5. ALL GRADING AND CONSTRUCTION ACTIVITIES SHALL COMPLY WITH LOS ANGELES COUNTY CODE, TITLE 12, SECTION 12.12.030 THAT CONTROLS AND RESTRICTS NOISE FROM THE USE OF CONSTRUCTION AND GRADING EQUIPMENT FROM THE HOURS OF 8:00 PM TO 6:30 AM, AND ON SUNDAYS AND HOLIDAYS. *(MORE RESTRICTIVE CONSTRUCTION ACTIVITY TIMES MAY GOVERN, AS REQUIRED BY THE DEPARTMENT OF REGIONAL PLANNING AND SHOULD BE SHOWN ON THE GRADING PLANS WHEN APPLICABLE.)*
6. CALIFORNIA PUBLIC RESOURCES CODE (SECTION 5097.98) AND HEALTH AND SAFETY CODE (SECTION 7050.5) ADDRESS THE DISCOVERY AND DISPOSITION OF HUMAN REMAINS. IN THE EVENT OF DISCOVERY OR RECOGNITION OF ANY HUMAN REMAINS IN ANY LOCATION OTHER THAN A DEDICATED CEMETERY, THE LAW REQUIRES THAT GRADING IMMEDIATELY STOPS AND NO FURTHER EXCAVATION OR DISTURBANCE OF THE SITE, OR ANY NEARBY AREA WHERE HUMAN REMAINS MAY BE LOCATED, UNTIL THE FOLLOWING MEASURES HAVE BEEN TAKEN:
   A. THE COUNTY CORONER HAS BEEN INFORMED AND HAS DETERMINED THAT NO INVESTIGATION OF THE CAUSE OF DEATH IS REQUIRED, AND;
   B. IF THE REMAINS ARE OF NATIVE AMERICAN ORIGIN, THE DESCENDANTS FROM THE DECEASED NATIVE AMERICAN HAVE MADE A RECOMMENDATION FOR THE MEANS OF TREATING OR DISPOSING OF, WITH APPROPRIATE DIGNITY, THE HUMAN REMAINS AND ANY ASSOCIATED GRAVE GOODS.
7. THE LOCATION AND PROTECTION OF ALL UTILITIES IS THE RESPONSIBILITY OF THE PERMITTEE.
8. ALL EXPORT OF MATERIAL FROM THE SITE MUST GO TO A PERMITTED SITE APPROVED BY THE BUILDING OFFICIAL OR A LEGAL DUMP SITE. RECEIPTS FOR ACCEPTANCE OF EXCESS MATERIAL BY A DUMP SITE ARE REQUIRED AND MUST BE PROVIDED TO THE BUILDING OFFICIAL UPON REQUEST.
9. A COPY OF THE GRADING PERMIT AND APPROVED GRADING PLANS MUST BE IN THE POSSESSION OF A RESPONSIBLE PERSON AND AVAILABLE AT THE SITE AT ALL TIMES.
10. SITE BOUNDARIES, EASEMENTS, DRAINAGE DEVICES, RESTRICTED USE AREAS SHALL BE LOCATED PER CONSTRUCTION STAKING BY FIELD ENGINEER OR LICENSED SURVEYOR. PRIOR TO GRADING, AS REQUESTED BY THE BUILDING OFFICIAL , ALL PROPERTY LINES, EASEMENTS, AND RESTRICTED USE AREAS SHALL BE STAKED.
11. NO GRADING OR CONSTRUCTION SHALL OCCUR WITHIN THE PROTECTED ZONE OF ANY PROTECTED TREE SPECIES AS REQUIRED PER PLANNING APPROVAL.
12. THE STANDARD RETAINING WALL DETAILS SHOWN ON THE GRADING PLANS ARE FOR REFERENCE ONLY. STANDARD RETAINING WALLS ARE NOT CHECKED, PERMITTED, OR INSPECTED PER THE GRADING PERMIT. A SEPARATE RETAINING WALL PERMIT IS REQUIRED FOR ALL STANDARD RETAINING WALLS.
    NOTE: THIS NOTE ONLY APPLIES TO STANDARD RETAINING WALLS. GEOGRID FABRIC AND SEGMENTAL RETAINING WALLS DO NOT REQUIRE A SEPARATE RETAINING WALL PERMIT. DETAILS AND CONSTRUCTION NOTES FOR ALL GEOGRID WALLS MUST BE ON THE GRADING PLAN.
13. A PREVENTATIVE PROGRAM TO PROTECT THE SLOPES FROM POTENTIAL DAMAGE FROM BURROWING RODENTS IS REQUIRED PER SECTION J101.8 OF THE COUNTY OF LOS ANGELES BUILDING CODE. OWNER IS TO INSPECT SLOPES PERIODICALLY FOR EVIDENCE OF BURROWING RODENTS AND AT FIRST EVIDENCE OF THEIR EXISTENCE SHALL EMPLOY AN EXTERMINATOR FOR THEIR REMOVAL.
14. WHERE A GRADING PERMIT IS ISSUED AND THE BUILDING OFFICIAL DETERMINES THAT THE GRADING WILL NOT BE COMPLETED PRIOR TO NOVEMBER 1, THE OWNER OF THE SITE ON WHICH THE GRADING IS BEING PERFORMED SHALL, ON OR BEFORE OCTOBER 1, FILE OR CAUSE TO BE FILED WITH THE BUILDING OFFICIAL AND ESCP PER SECTION J110.8.3 OF THE COUNTY OF LOS ANGELES BUILDING CODE.
15. TRANSFER OF RESPONSIBILITY: IF THE FIELD ENGINEER, THE SOILS ENGINEER, OR THE ENGINEERING GEOLOGIST OF RECORD IS CHANGED DURING GRADING, THE WORK SHALL BE STOPPED UNTIL THE REPLACEMENT HAS AGREED IN WRITING TO ACCEPT THEIR RESPONSIBILITY WITHIN THE AREA OF TECHNICAL COMPETENCE FOR APPROVAL UPON COMPLETION OF THE WORK. IT SHALL BE THE DUTY OF THE PERMITTEE TO NOTIFY THE BUILDING OFFICIAL IN WRITING OF SUCH CHANGE PRIOR TO THE RECOMMENCEMENT OF SUCH GRADING.

INSPECTION NOTES

16. THE PERMITTEE OR HIS AGENT SHALL NOTIFY THE BUILDING OFFICIAL AT LEAST ONE WORKING DAY IN ADVANCE OF REQUIRED INSPECTIONS AT FOLLOWING STAGES OF THE WORK. (SECTION J105.7 OF THE BUILDING CODE.)
    (a) PRE-GRADE – BEFORE THE START OF ANY EARTH DISTURBING ACTIVITY OR CONSTRUCTION.
    (b) INITIAL – WHEN THE SITE HAS BEEN CLEARED OF VEGETATION AND UNAPPROVED FILL HAS BEEN SCARIFIED, BENCHED OR OTHERWISE PREPARED FOR FILL. FILL SHALL NOT BE PLACED PRIOR TO THIS INSPECTION.
    NOTE: PRIOR TO ANY CONSTRUCTION ACTIVITIES, INCLUDING GRADING, ALL STORM WATER POLLUTION PREVENTION MEASURES, INCLUDING EROSION CONTROL DEVICES WHICH CONTAIN SEDIMENTS, MUST BE INSTALLED.
    (c) ROUGH– WHEN APPROXIMATE FINAL ELEVATIONS HAVE BEEN ESTABLISHED; DRAINAGE TERRACES, SWALES AND BERMS INSTALLED AT THE TOP OF THE SLOPE; AND THE STATEMENTS REQUIRED IN THIS SECTION HAVE BEEN RECEIVED.
    (d) FINAL– WHEN GRADING HAS BEEN COMPLETED; ALL DRAINAGE DEVICES INSTALLED; SLOPE PLANTING ESTABLISHED, IRRIGATION SYSTEMS INSTALLED AND THE AS-BUILT PLANS, REQUIRED STATEMENTS, AND REPORTS HAVE BEEN SUBMITTED AND APPROVED.
17. IN ADDITION TO THE INSPECTION REQUIRED OF THE BUILDING OFFICIAL FOR REGULAR GRADING, REPORTS AND STATEMENTS SHALL BE SUBMITTED TO THE BUILDING OFFICIAL IN ACCORDANCE WITH SECTIONS J105 OF THE COUNTY OF LOS ANGELES BUILDING CODE.
18. UNLESS OTHERWISE DIRECTED BY THE BUILDING OFFICIAL, THE FIELD ENGINEER FOR ALL ENGINEERED GRADING PROJECTS SHALL PREPARE ROUTING INSPECTION REPORTS AS REQUIRED UNDER SECTION J105.11 OF THE COUNTY OF LOS ANGELES BUILDING CODE. THESE REPORTS, KNOWN AS "REPORT OF GRADING ACTIVITIES," SHALL BE SUBMITTED TO THE BUILDING OFFICIAL AS FOLLOWS:
    1. BI-WEEKLY DURING ALL TIMES WHEN GRADING OF 400 CUBIC YARDS OR MORE PER WEEK IS OCCURRING ON THE SITE;
    2. MONTHLY, AT ALL OTHER TIMES, AND;
    3. AT ANY TIME WHEN REQUESTED IN WRITING BY THE BUILDING OFFICIAL.

    SUCH "REPORT OF GRADING ACTIVITIES" SHALL CERTIFY TO THE BUILDING OFFICIAL THAT THE FIELD ENGINEER HAS INSPECTED THE GRADING SITE AND RELATED ACTIVITIES AND HAS FOUND THEM IN COMPLIANCE WITH THE APPROVED GRADING PLANS AND SPECIFICATIONS, THE BUILDING CODE, ALL GRADING PERMIT CONDITIONS, AND ALL OTHER APPLICABLE ORDINANCES AND REQUIREMENTS. THIS FORM IS AVAILABLE AT THE FOLLOWING ADDRESS: HTTP://DPW.LACOUNTY.GOV/BSD/DG/DEFAULT.ASPX. "REPORT OF GRADING ACTIVITIES" MAY BE SCANNED AND UPLOADED AT THE WEBSITE OR FAXED TO (310) 530-5482. FAILURE TO PROVIDE REQUIRED INSPECTION REPORTS WILL RESULT IN A "STOP WORK ORDER."
19. ALL GRADED SITES MUST HAVE DRAINAGE SWALES, BERMS AND OTHER DRAINAGE DEVICES PRIOR TO ROUGH GRADING APPROVAL PER SECTION J105.7 OF THE COUNTY OF LOS ANGELES BUILDING CODE.
20. THE GRADING CONTRACTOR SHALL SUBMIT THE STATEMENT TO THE GRADING INSPECTOR AS REQUIRED BY SECTION J105.12 OF THE COUNTY OF LOS ANGELES BUILDING CODE AT THE COMPLETION OF ROUGH GRADING.
21. FINAL GRADING MUST BE APPROVED BEFORE OCCUPANCY OF BUILDINGS WILL BE ALLOWED PER SECTION J105 OF THE COUNTY OF LOS ANGELES BUILDING CODE.
22. A PROPERTY LINE SURVEY, PREPARED BY A CA LICENSED LAND SURVEYOR OR A CIVIL ENGINEER WITH A LICENSE NUMBER BELOW C33966, MAY BE REQUIRED BY THE BUILDING OFFICIAL BASED ON SITE CONDITIONS IN ACCORDANCE WITH LACBC SECTION 108.1.

DRAINAGE NOTES

23. ROOF DRAINAGE MUST BE DIVERTED FROM GRADED SLOPES.
24. PROVISIONS SHALL BE MADE FOR CONTRIBUTORY DRAINAGE AT ALL TIMES.
25. ALL CONSTRUCTION AND GRADING WITHIN A STORM DRAIN EASEMENT ARE TO BE DONE PER PRIVATE DRAIN PD NO. n/a OR MISCELLANEOUS TRANSFER DRAIN MTD NO. n/a
26. ALL STORM DRAIN WORK IS TO BE DONE UNDER CONTINUOUS INSPECTION BY THE FIELD ENGINEER. STATUS REPORTS REQUIRED UNDER NOTE 18 AND SECTION J105.11 OF THE COUNTY OF LOS ANGELES BUILDING CODE SHALL INCLUDE INSPECTION INFORMATION AND REPORTS ON THE STORM DRAIN INSTALLATION.

AGENCY NOTES

27. AN ENCROACHMENT PERMIT FROM (COUNTY OF LOS ANGELES DEPARTMENT OF PUBLIC WORKS) (CALTRANS) (CITY OF n/a) IS REQUIRED FOR ALL WORK WITHIN OR AFFECTING ROAD RIGHT OF WAY. ALL WORK WITHIN ROAD RIGHT OF WAY SHALL CONFORM TO (COUNTY OF LOS ANGELES DEPARTMENT OF PUBLIC WORKS) (CALTRANS) (CITY OF n/a) ENCROACHMENT PERMIT.
28. AN ENCROACHMENT PERMIT/CONNECTION PERMIT IS REQUIRED FROM THE COUNTY OF LOS ANGELES FLOOD CONTROL DISTRICT FOR ALL WORK WITHIN THE LOS ANGELES COUNTY FLOOD CONTROL DISTRICT RIGHT OF WAY. ALL WORK SHALL CONFORM WITH CONDITIONS SET BY THE PERMIT.
29. PERMISSION TO OPERATE IN VERY HIGH FIRE HAZARD SEVERITY ZONE MUST BE OBTAINED FROM THE FIRE PREVENTION BUREAU OR THE LOCAL FIRE STATION PRIOR TO COMMENCING WORK.
30. ALL WORK WITHIN THE STREAMBED AND AREAS OUTLINED ON THE GRADING PLANS SHALL CONFORM TO:
    -- ARMY CORP 404 PERMIT NUMBER: n/a
    -- CALIFORNIA FISH & WILDLIFE PERMIT NO.: n/a
31. ALL CONSTRUCTION/DEMOLITION, GRADING, AND STORAGE OF BULK MATERIALS MUST COMPLY WITH THE LOCAL AQMD RULE 403 FOR FUGITIVE DUST. INFORMATION ON RULE 403 IS AVAILABLE AT AQMD'S WEBSITE HTTP://WWW.AVAQMD.COM

GENERAL GEOTECHNICAL NOTES

32. ALL WORK MUST BE IN COMPLIANCE WITH THE RECOMMENDATIONS INCLUDED IN THE GEOTECHNICAL CONSULTANT'S REPORT(S) AND THE APPROVED GRADING PLANS AND SPECIFICATIONS.
33. GRADING OPERATIONS MUST BE CONDUCTED UNDER PERIODIC INSPECTIONS BY THE GEOTECHNICAL CONSULTANTS WITH MONTHLY INSPECTION REPORTS TO BE SUBMITTED TO THE GEOLOGY AND SOILS SECTION. (900 S. FREMONT AVE., ALHAMBRA, CA 91803 – 3RD FLOOR)
34. THE SOIL ENGINEER SHALL PROVIDE SUFFICIENT INSPECTIONS DURING THE PREPARATION OF THE NATURAL GROUND AND THE PLACEMENT AND COMPACTION OF THE FILL TO BE SATISFIED THAT THE WORK IS BEING PERFORMED IN ACCORDANCE WITH THE PLAN AND APPLICABLE CODE REQUIREMENTS.
35. ROUGH GRADING MUST BE APPROVED BY A FINAL ENGINEERING GEOLOGY AND SOILS ENGINEERING REPORT. AN AS-BUILT GEOLOGIC MAP MUST BE INCLUDED IN THE FINAL GEOLOGY REPORT. PROVIDE A FINAL REPORT STATEMENT THAT VERIFIES WORK WAS DONE IN ACCORDANCE WITH REPORT RECOMMENDATIONS AND CODE PROVISIONS (SECTION J105.12 OF THE COUNTY OF LOS ANGELES BUILDING CODE). THE FINAL REPORT(S) MUST BE SUBMITTED TO THE GEOTECHNICAL AND MATERIALS ENGINEERING DIVISION FOR REVIEW AND APPROVAL.
36. FOUNDATION, WALL AND POOL EXCAVATIONS MUST BE INSPECTED AND APPROVED BY THE CONSULTING GEOLOGIST AND SOILS ENGINEER, PRIOR TO THE PLACING OF STEEL OR CONCRETE.
37. BUILDING PADS LOCATED IN CUT/FILL TRANSITION AREAS SHALL BE OVER-EXCAVATED A MINIMUM OF THREE (3) FEET BELOW THE PROPOSED BOTTOM OF FOOTING.

FILL NOTES

38. ALL FILL SHALL BE COMPACTED TO THE FOLLOWING MINIMUM RELATIVE COMPACTION CRITERIA;
    A. 90 PERCENT OF MAXIMUM DRY DENSITY WITHIN 40 FEET BELOW FINISH GRADE.
    B. 93 PERCENT OF MAXIMUM DRY DENSITY DEEPER THAN 40 FEET BELOW FINISH GRADE, UNLESS A LOWER RELATIVE COMPACTION (NOT LESS THAN 90 PERCENT OF MAXIMUM DRY DENSITY) IS JUSTIFIED BY THE GEOTECHNICAL ENGINEER. THE RELATIVE COMPACTION SHALL BE DETERMINED BY A.S.T.M. SOIL COMPACTION TEST D1557-91 WHERE APPLICABLE: WHERE NOT APPLICABLE, A TEST ACCEPTABLE TO THE BUILDING OFFICIAL SHALL BE USED. (SECTION J107.5 OF THE COUNTY OF LOS ANGELES BUILDING CODE.)
    C. 95 PERCENT MAXIMUM DRY DENSITY IS REQUIRED FOR ALL FIRE LANES UNLESS OTHERWISE APPROVED BY THE FIRE DEPARTMENT.
39. FIELD DENSITY SHALL BE DETERMINED BY A METHOD ACCEPTABLE TO THE BUILDING OFFICIAL. (SECTION J107.5 OF THE COUNTY OF LOS ANGELES BUILDING CODE.) HOWEVER, NOT LESS THAN 10% OF THE REQUIRED DENSITY TEST, UNIFORMLY DISTRIBUTED, AND SHALL BE OBTAINED BY THE SAND CONE METHOD.
40. SUFFICIENT TESTS OF THE FILL SOILS SHALL BE MADE TO DETERMINE THE RELATIVE COMPACTION OF THE FILL IN ACCORDANCE WITH THE FOLLOWING MINIMUM GUIDELINES:
    A. ONE TEST FOR EACH TWO FEET VERTICAL LIFT.
    B. ONE TEST FOR EACH 1,000 CUBIC YARDS OF MATERIAL PLACED.
    C. ONE TEST AT THE LOCATION OF THE FINAL FILL SLOPE FOR EACH BUILDING SITE (LOT) IN EACH FOUR-FOOT VERTICAL LIFT OR PORTION THEREOF.
    D. ONE TEST IN THE VICINITY OF EACH BUILDING PAD FOR EACH FOUR-FOOT VERTICAL LIFT OR PORTION THEREOF.
41. SUFFICIENT TESTS OF THE FILL SOILS SHALL BE MADE TO VERIFY THAT THE SOIL PROPERTIES COMPLY WITH DESIGN REQUIREMENTS, AS DETERMINED BY THE SOILS ENGINEER INCLUDING SOIL TYPES, SHEAR STRENGTHS PARAMETERS AND CORRESPONDING UNIT WEIGHTS IN ACCORDANCE WITH THE FOLLOWING GUIDELINES:
    A. PRIOR AND SUBSEQUENT TO PLACEMENT OF THE FILL, SHEAR TESTS SHALL BE TAKEN ON EACH TYPE OF SOIL OR SOIL MIXTURE TO BE USED FOR ALL FILL SLOPES STEEPER THAN THREE (3) HORIZONTAL TO ONE VERTICAL
    B. SHEAR TEST RESULTS FOR THE PROPOSED FILL MATERIAL MUST MEET OR EXCEED THE DESIGN VALUES USED IN THE GEOTECHNICAL REPORT TO DETERMINE SLOPE STABILITY REQUIREMENTS. OTHERWISE, THE SLOPE MUST BE RE-EVALUATED USING THE ACTUAL SHEAR TEST VALUE OF THE FILL MATERIAL THAT IS IN PLACE.
    C. FILL SOILS SHALL BE FREE OF DELETERIOUS MATERIALS.
42. FILL SHALL NOT BE PLACED UNTIL STRIPPING OF VEGETATION, REMOVAL OF UNSUITABLE SOILS, AND INSTALLATION OF SUBDRAIN (IF ANY) HAVE BEEN INSPECTED AND APPROVED BY THE SOILS ENGINEER. THE BUILDING OFFICIAL MAY REQUIRE A "STANDARD TEST METHOD FOR MOISTURE, ASH, ORGANIC MATTER, PEAT OR OTHER ORGANIC SOILS" ASTM D-2974-87 ON ANY SUSPECT MATERIAL. DETRIMENTAL AMOUNTS OF ORGANIC MATERIAL SHALL NOT BE PERMITTED IN FILLS. SOIL CONTAINING SMALL AMOUNTS OF ROOTS MAY BE ALLOWED PROVIDED THAT THE ROOTS ARE IN A QUANTITY AND DISTRIBUTED IN A MANNER THAT WILL NOT BE DETRIMENTAL TO THE FUTURE USE OF THE SITE AND THE USE OF SUCH MATERIAL IS APPROVED BY THE SOILS ENGINEER.
43. ROCK OR SIMILAR MATERIAL GREATER THAN 12 INCHES IN DIAMETER SHALL NOT BE PLACED IN THE FILL UNLESS RECOMMENDATIONS FOR SUCH PLACEMENT HAVE BEEN SUBMITTED BY THE SOIL ENGINEER AND APPROVED IN ADVANCE BY THE BUILDING OFFICIAL. LOCATION, EXTENT, AND ELEVATION OF ROCK DISPOSAL AREAS MUST BE SHOWN ON AN "AS-BUILT" GRADING PLAN.
44. CONTINUOUS INSPECTION BY THE SOIL ENGINEER, OR A RESPONSIBLE REPRESENTATIVE, SHALL BE PROVIDED DURING ALL FILL PLACEMENT AND COMPACTION OPERATIONS WHERE FILLS HAVE A DEPTH GREATER THAN 30 FEET OR SLOPE SURFACE STEEPER THAN 2:1. (SECTION J107.8 OF THE COUNTY OF LOS ANGELES BUILDING CODE).
45. CONTINUOUS INSPECTION BY THE SOIL ENGINEER, OR A RESPONSIBLE REPRESENTATIVE, SHALL BE PROVIDED DURING ALL SUBDRAIN INSTALLATION. (J107.2 OF THE LOS ANGELES COUNTY BUILDING CODE.)
46. ALL SUBDRAIN OUTLETS ARE TO BE SURVEYED FOR LINE AND ELEVATION. SUBDRAIN INFORMATION MUST BE SHOWN ON AN "AS-BUILT" GRADING PLAN.
47. FILL SLOPES IN EXCESS OF 2:1 STEEPNESS RATIO ARE TO BE CONSTRUCTED BY THE PLACEMENT OF SOIL AT SUFFICIENT DISTANCE BEYOND THE PROPOSED FINISH SLOPE TO ALLOW COMPACTION EQUIPMENT TO BE OPERATED AT THE OUTER LIMITS OF THE FINAL SLOPE SURFACE. THE EXCESS FILL IS TO BE REMOVED PRIOR TO COMPLETION OF ROUGH GRADING. OTHER CONSTRUCTION PROCEDURES MAY BE USED WHEN IT IS DEMONSTRATED TO THE SATISFACTION OF THE BUILDING OFFICIAL THAT THE ANGLE OF SLOPE, CONSTRUCTION METHOD AND OTHER FACTORS WILL HAVE EQUIVALENT EFFECT. (SECTION J107.5 OF THE COUNTY OF LOS ANGELES BUILDING CODE.)
48. PLANTING AND IRRIGATION ON GRADED SLOPES MUST COMPLY WITH THE FOLLOWING MINIMUM GUIDELINES.
    a. THE SURFACE OF ALL CUT SLOPES MORE THAN 5 FEET IN HEIGHT AND FILL SLOPES MORE THAN 3 FEET IN HEIGHT SHALL BE PROTECTED AGAINST DAMAGE BY EROSION BY PLANTING WITH GRASS OR GROUNDCOVER PLANTS. SLOPES EXCEEDING 15 FEET VERTICAL HEIGHT SHALL ALSO BE PLANTED WITH SHRUBS, SPACED AT NOT TO EXCEED 10 FEET ON CENTER; OR TREES, SPACED AT NOT TO EXCEED 20 FEET ON CENTER, OR A COMBINATION OF SHRUBS AND TREES AT EQUIVALENT SPACING, IN ADDITION TO THE GRASS OR GROUNDCOVER PLANTS. THE PLANTS SELECTED AND PLANTING METHODS USED SHALL BE SUITABLE FOR THE SOIL AND CLIMATIC CONDITIONS OF THE SITE. PLANT MATERIAL SHALL BE SELECTED WHICH WILL PRODUCE A COVERAGE OF PERMANENT PLANTING EFFECTIVELY CONTROLLING EROSION. CONSIDERATION SHALL BE GIVEN TO DEEP ROOTED PLANTING MATERIAL NEEDING LIMITED WATERING, MAINTENANCE, HIGH ROOT TO SHOOT RATIO, WIND SUSCEPTIBILITY AND FIRE RETARDENT CHARACTERISTICS. ALL PLANT MATERIALS MUST BE APPROVED BY THE BUILDING OFFICIAL. (SECTION J110.3 OF THE COUNTY OF LOS ANGELES BUILDING CODE.)
    NOTE: PLANTING MAY BE MODIFIED FOR THE SITE IF SPECIFIC RECOMMENDATIONS ARE PROVIDED BY BOTH THE SOILS ENGINEER AND A LANDSCAPE ARCHITECT. SPECIFIC RECOMMENDATIONS MUST CONSIDER SOILS AND CLIMATIC CONDITIONS, IRRIGATION REQUIREMENTS, PLANTING METHODS, FIRE RETARDANT CHARACTERISTICS, WATER EFFICIENCY, MAINTENANCE NEEDS, AND OTHER REGULATORY REQUIREMENTS. RECOMMENDATIONS MUST INCLUDE A FINDING THAT THE ALTERNATIVE PLANTING WILL PROVIDE A PERMANENT AND EFFECTIVE METHOD OF EROSION CONTROL. MODIFICATIONS TO PLANTING MUST BE APPROVED BY THE BUILDING OFFICIAL PRIOR TO INSTALLATION.
    B. SLOPES REQUIRED TO BE PLANTED BY SECTION J110.3 SHALL BE PROVIDED WITH AN APPROVED SYSTEM OF IRRIGATION THAT IS DESIGNED TO COVER ALL PORTIONS OF THE SLOPE. IRRIGATION SYSTEM PLANS SHALL BE SUBMITTED AND APPROVED PRIOR TO INSTALLATION. A FUNCTIONAL TEST OF THE SYSTEM MAY BE REQUIRED. FOR SLOPES LESS THAN 20 FEET IN VERTICAL HEIGHT, HOSE BIBS TO PERMIT HAND WATERING WILL BE ACCEPTABLE IF SUCH HOSE BIBS ARE INSTALLED AT CONVENIENTLY ACCESSIBLE LOCATIONS WHERE A HOSE NO LONGER THAN 50 FEET IS NECESSARY FOR IRRIGATION. THE REQUIREMENTS FOR PERMANENT IRRIGATION SYSTEMS MAY BE MODIFIED UPON SPECIFIC RECOMMENDATION OF A LANDSCAPE ARCHITECT OR EQUIVALENT AUTHORITY THAT, BECAUSE OF THE TYPE OF PLANTS SELECTED, THAT PLANTING METHODS USED AND THE SOIL AND CLIMATIC CONDITIONS AT THE SITE, IRRIGATION WILL NOT BE NECESSARY FOR THE MAINTENANCE OF THE SLOPE PLANTING. (SECTION J110.4 OF THE COUNTY OF LOS ANGELES BUILDING CODE.)
    C. OTHER GOVERNMENTAL AGENCIES MAY HAVE ADDITIONAL REQUIREMENTS FOR LANDSCAPING AND IRRIGATION. IT IS THE RESPONSIBILITY OF THE APPLICANT TO COORDINATE WITH OTHER AGENCIES TO MEET THEIR REQUIREMENTS WHILE MAINTAINING COMPLIANCE WITH THE COUNTY OF LOS ANGELES BUILDING CODE.
49. THE PLANTING AND IRRIGATION SYSTEMS SHALL BE INSTALLED AS SOON AS PRACTICAL AFTER ROUGH GRADING. PRIOR TO FINAL GRADING APPROVAL, ALL REQUIRED SLOPE PLANTING MUST BE WELL ESTABLISHED. (SECTION J110.7 OF THE COUNTY OF LOS ANGELES BUILDING CODE.)
50. LANDSCAPE AND IRRIGATION SYSTEM SHALL BE DESIGNED AND MAINTAINED TO PREVENT SPRAY ON STRUCTURES. (TITLE 31, SECTION 5.407.2.1)
51. PRIOR TO ROUGH GRADE APPROVAL, THIS PROJECT REQUIRES A LANDSCAPE PERMIT. LANDSCAPE PLANS IN COMPLIANCE WITH THE "MODEL WATER EFFICIENT LANDSCAPE ORDINANCE" TITLE 23 CHAPTER 2.7 OF CALIFORNIA CODE OF REGULATIONS (AB 1881) MUST BE SUBMITTED TO THE DEPARTMENT OF PUBLIC WORKS, LAND DEVELOPMENT DIVISION. (900 S. FREMONT AVE. ALHAMBRA- 3RD FLOOR, 91803 (626) 458-4921). TO OBTAIN LANDSCAPE PERMIT, APPROVED PLANS AND WATER PURVEYOR ACKNOWLEDGEMENT FORM MUST BE SUBMITTED TO THE LOCAL BUILDING & SAFETY OFFICE.

FIRE DEPARTMENT ACCESS DRIVEWAY REQUIREMENTS FOR GRADING PROJECTS

FOR SINGLE LOT GRADING PLANS, A STATEMENT SIGNED BY THE OWNER OR REGISTERED CIVIL ENGINEER IS REQUIRED VERIFYING THAT THE OWNER/ENGINEER IS AWARE THAT THE FIRE DEPARTMENT ACCESS ROAD REQUIREMENTS WILL BE DETERMINED PRIOR TO THE ISSUANCE OF BUILDING PERMITS. PERMISSION TO OPERATE IN FIRE ZONE 4 MUST BE OBTAINED FROM THE FIRE PREVENTION BUREAU OR THE LOCAL FIRE STATION PRIOR TO COMMENCING WORK.

SITE LOCATION: 1 PORTUGUESE BEND ROAD

GRADING PLAN CHECK NO: GR2301100001

THIS IS TO CERTIFY THAT THE OWNER OF THE SUBJECT PROPERTY IS AWARE OF THE FIRE DEPARTMENT ACCESS REQUIREMENTS WHICH ARE DEFINED IN SECTION 902 OF TITLE 32 OF THE LOS ANGELES COUNTY CODE (FIRE CODE) AND THE FOLLOWING STANDARDS ISSUED BY THE FORESTER AND FIRE WARDEN:
1. STANDARD FOR PRIVATE ACCESS ROADS AND DRIVEWAYS FOR SINGLE-FAMILY DWELLINGS (NO PUBLIC RIGHT OF WAY).
2. STANDARDS FOR ACCESS TO ALL BUILDINGS OTHER THAN SINGLE-FAMILY DWELLINGS.

ADDITIONAL GRADING OR CONSTRUCTION MAY BE REQUIRED AND APPROVED BY THE FORESTER AND FIRE WARDEN TO MEET THESE REQUIREMENTS PRIOR TO ISSUANCE OF A BUILDING PERMIT.

OWNER: OR ENGINEER:

SIGNATURE: _____ SIGNATURE: _____

ADDRESS: _____ ADDRESS: 25834 NARBONNE AVE #210, LOMITA CA 90717

BUILDING AND SAFETY DIVISION
Department of Public Works
DRAINAGE & GRADING APPROVED
UNDER LOS ANGELES COUNTY CODE
TITLE 26
anwong
PUBLIC WORKS
12/20/2023 11:41:52 AM
This set of plans and specifications shall be kept at the job site at all times; and it is unlawful to make any changes, modifications or alterations to these plans or specifications without the prior written permission of the Building Official. The stamping of this set of plans and specifications SHALL NOT, under any circumstances, be deemed to permit or to be an approval of any work or activity that violates any provisions of any County Ordinance or State Law

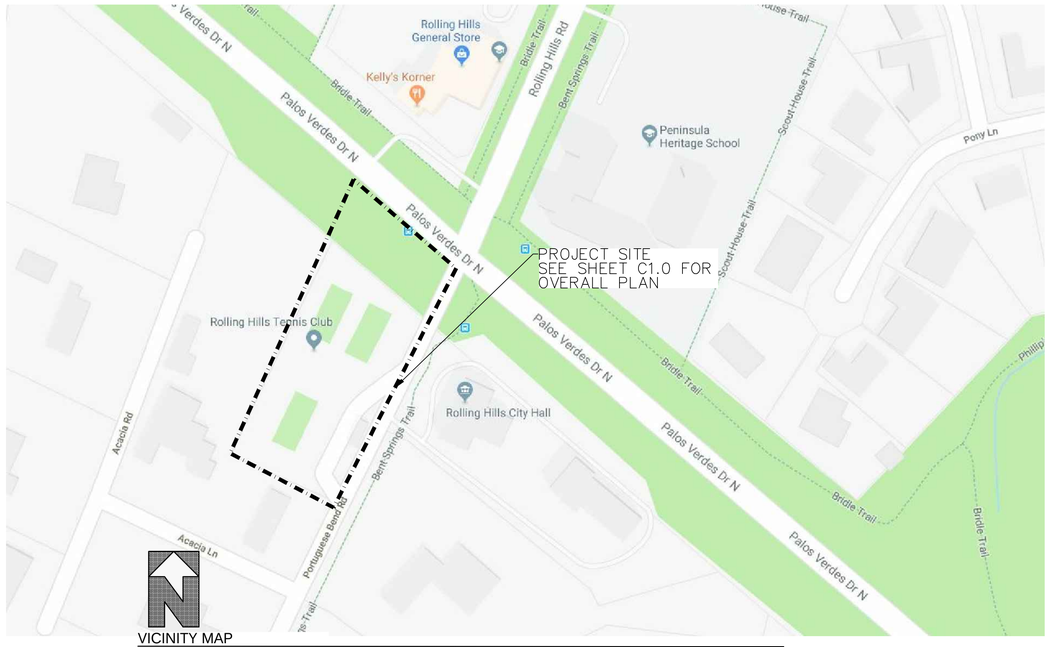

VICINITY MAP
SCALE: 1" = 100'

Low Impact Development Analysis

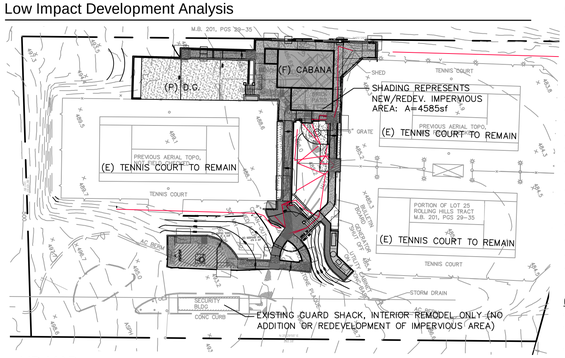

LID MAP
SCALE: 1" = 40'

ANALYSIS

PROPOSED PROJECT CONTEMPLATES THE ADDITION OR REDEVELOPMENT OF 4,865 SQUARE FEET OF IMPERVIOUS AREA; THE BALANCE OF THE PROJECT IS LANDSCAPING, OR OTHERWISE PERVIOUS MATERIALS SUCH AS DECOMPOSED GRANITE SURFACES.

THE CITY OF ROLLING HILLS MUNICIPAL CODE PROVIDES A THRESHOLD OF 5,000 SQUARE FEET OF NEW OR REDEVELOPED IMPERVIOUS AREA FOR LOW IMPACT DEVELOPMENT.

THUS, THE PROJECT IS EXEMPT FROM LOW IMPACT DEVELOPMENT REQUIREMENTS.

ENGINEER'S NOTES

A. ALL WORK AND MATERIAL REQUIRED BY THESE PLANS SHALL BE IN ACCORDANCE WITH THE "STANDARD SPECIFICATIONS FOR PUBLIC WORKS CONSTRUCTION," LATEST EDITION, INCLUDING AMENDMENTS AND SUPPLEMENTS THERETO AS PROMULGATED BY A.G.C. AND A.P.W.A. LOS ANGELES COUNTY ORDINANCE NO. 2225, CHAPTER 70 (EXCAVATION AND GRADING) AND/OR LOCAL ORDINANCES AS APPLICABLE.
B. CONTRACTORS BIDDING THE JOB ARE EXPECTED TO PREPARE THEIR OWN ESTIMATES AND WILL IMMEDIATELY NOTIFY THE CIVIL ENGINEER AND THE BUILDING OFFICIAL UPON DISCOVERING ANY ERRORS, OMISSIONS, OR DIFFERENCES THAT AFFECT THE COST
C. THE CONTRACTOR IS REQUIRED TO FAMILIARIZE HIMSELF WITH THE PLANS, THE SOILS AND OR GEOLOGIC REPORTS, AND THE SITE PRIOR TO COMMENCING WORK.
D. PROPOSED STARTING DATE: 6-1-2023
E. PROPOSED COMPLETION DATE: 3-1-2024
F. ESTIMATED QUANTITY OF CUT: 150 CUBIC YDS.
G. ESTIMATED QUANTITY OF FILL: 150 CUBIC YDS.
NOTE: (FOR PLAN CHECK AND PERMIT FEES ONLY, NOT FOR BID OR PAYMENT. SEE NOTE B.
H. THE EXISTENCE AND LOCATION OF ANY UNDERGROUND UTILITY PIPES, CONDUITS, OR STRUCTURES SHOWN ON THESE PLANS ARE OBTAINED BY A SEARCH OF THE AVAILABLE RECORDS. THE CONTRACTOR IS REQUIRED TO INVESTIGATE THE UTILITY LINES, (INCLUDING HOUSE LATERALS) FOR B

PORTION OF LOT 25
ROLLING HILLS TRACT
M.B. 201, PGS 29–35

N 25°29'55" E
333.74'

LIMITS OF FIELD SURVEY

30" TREE
30" TREE
18" TREE
BENCH
BBQ
BRICK
SHED
TRELLIS
BRICK PATIO
BRICK
6" GRATE
BRICK PATH

TENNIS COURT
PREVIOUS AERIAL TOPO,
NOT FIELD CHECKED

TENNIS COURT
PREVIOUS AERIAL TOPO,
NOT FIELD CHECKED

PORTION OF LOT 25
ROLLING HILLS TRACT
M.B. 201, PGS 29–35

TENNIS COURT

S 66°49'30" E
167.95'

30" MH
4" CLEAN-OUT
MED ALERT
(E) SEPTIC TANK
8' X 3.5'
(E) SEEPAGE PIT
4'ø X 34'
AC BERM
BRICK
BRICK STONE PLAQUE
BULLETIN BOARD
GENERATOR SHUT OFF
UTILITY CABINET ON A CONC BASE
STORM DRAIN
AC BERM
ROLLING HILLS ESTATES
SECURITY BLDG
CONC CURB
ASPH

N 49°32'40" W
178.38'

N 25°29'55" E
282.16'

LIMITS OF FIELD SURVEY

TOPOGRAPHIC SURVEY
SCALE: 1" = 10'

1
C0.1

GRAPHIC SCALE
10 0 10 20
(IN FEET)
1 inch = 10 ft.

Revisions	By

Bolton Engineering Corp.
Civil Engineering and Surveying
25834 Narbonne Avenue Suite 210
Lomita, Ca. 90717
Ph: 310-325-5580 Fax: 310-325-5581

CLIENT: CITY OF ROLLING HILLS &
ROLLING HILLS COMMUNITY ASSOCIATION
2 PORTUGUESE BEND ROAD
ROLLING HILLS, CA 90274

TITLE: TOPOGRAPHIC SURVEY
TENNIS COURT AREA IMPROVEMENTS
1 PORTUGUESE BEND ROAD
ROLLING HILLS, CA 90274

Date: Sept. 24,2023
Scale: AS SHOWN
Drawn: TMA
Checked: DJB
Job No. 8080_P1
Sheet
C0.1
Of 10 Sheets

J:\8080P.1_City Tennis Court Parcel\dwg\C-GRADING PLAN_Tennis Court_2020_h3 – Copy.dwg 9/26/2023 10:19:19 AM

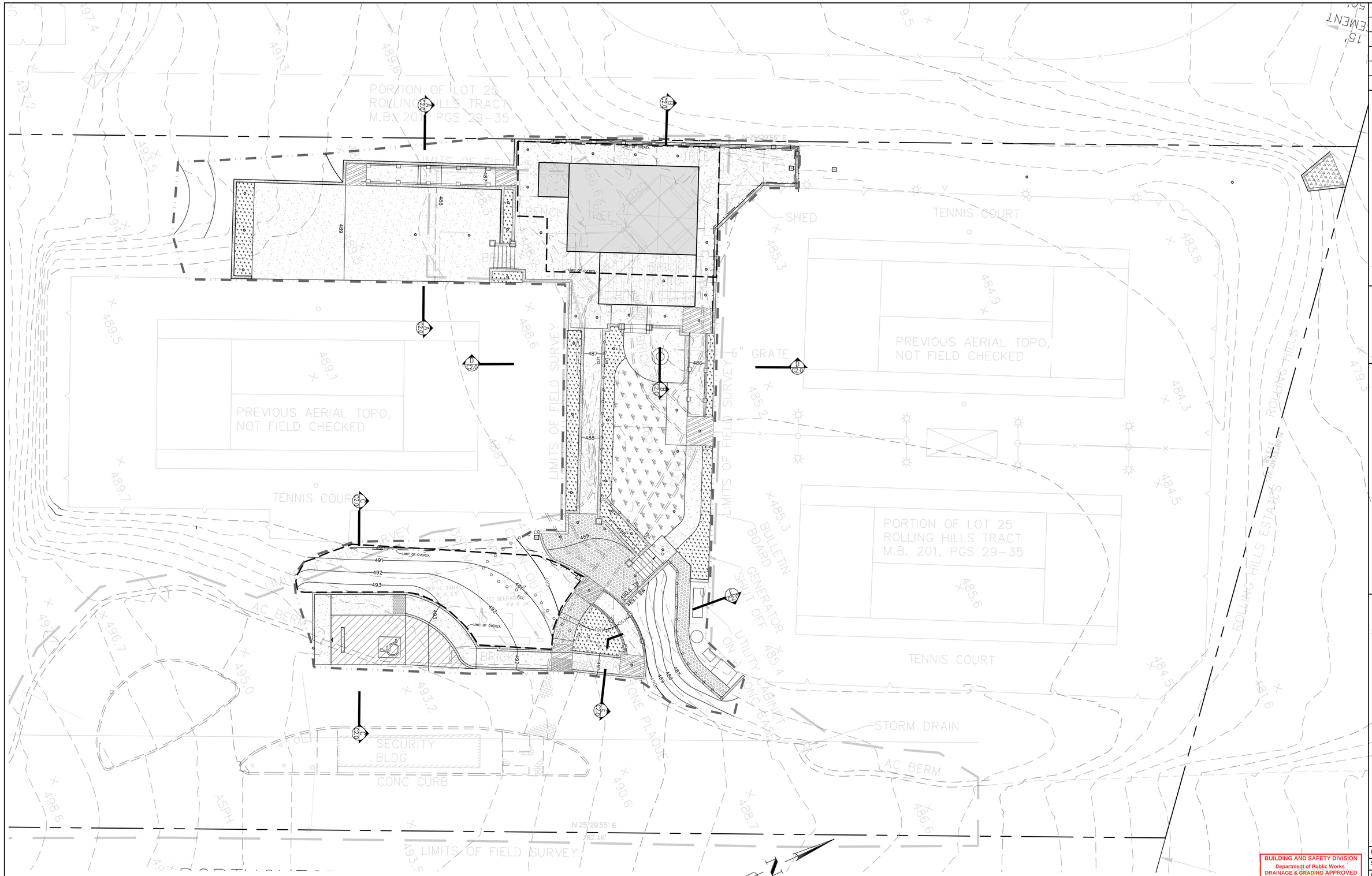

TENNIS COURT OVERALL SITE PLAN
SCALE: 1" = 10'

1 C1.0

GRAPHIC SCALE
10 0 10 20
(IN FEET)
1 inch = 10 ft.

DIGALERT
DIAL TOLL FREE
1-800-227-2600
AT LEAST TWO DAYS BEFORE YOU DIG
UNDERGROUND SERVICE ALERT OF SOUTHERN CALIFORNIA

ANY UNDERGROUND UTILITIES OR STRUCTURES SHOWN ON THESE PLANS WERE PLOTTED FROM CITY RECORDS. NO ADDITIONAL UTILITY OR SUBSTRUCTURE RESEARCH HAS BEEN PERFORMED. THE CONTRACTOR SHALL DETERMINE THE EXISTENCE AND THE TRUE HORIZONTAL AND VERTICAL LOCATION AND SIZE OF ANY UNDERGROUND UTILITIES OR STRUCTURES AND SHALL BE RESPONSIBLE FOR PROTECTION, ADJUSTMENT, OR DAMAGE TO ANY PUBLIC OR PRIVATE UTILITIES SHOWN OR NOT SHOWN HEREON. THE CONTRACTOR SHALL ALSO BE RESPONSIBLE FOR NOTIFYING U.S.A./DIG ALERT AT 1-800-227-2600 FOR UNDERGROUND UTILITY MARKING AT LEAST 48 HOURS PRIOR TO COMMENCING ANY CONSTRUCTION. CONSTRUCTION SHALL NOT COMMENCE PRIOR TO SAID UNDERGROUND UTILITY MARKING.

BUILDING AND SAFETY DIVISION
Department of Public Works
DRAINAGE & GRADING APPROVED
UNDER LOS ANGELES COUNTY CODE
TITLE 26
awong
PUBLIC WORKS
12/26/2023 11:41:52 AM

This set of plans and specifications must be kept at the job site at all times and it is unlawful to make any changes, modifications or alterations to these plans or specifications without the prior written permission of the Building Official. The stamping of this set of plans and specifications SHALL NOT, under any circumstances, be deemed to permit or to be an approval of any work or activity that violates any provisions of any County Ordinance or State Law.

Revisions	By

Bolton Engineering Corp.
Civil Engineering and Surveying
25834 Narbonne Avenue Suite 210
Lomita, Ca. 90717
Ph: 310-325-5580 Fax: 310-325-5581

CLIENT: CITY OF ROLLING HILLS &
ROLLING HILLS COMMUNITY ASSOCIATION
2 PORTUGUESE BEND ROAD
ROLLING HILLS, CA 90274

TITLE: OVERALL SITE PLAN
TENNIS COURT AREA IMPROVEMENTS
1 PORTUGUESE BEND ROAD
ROLLING HILLS, CA 90274

Date: Sept. 24,2023
Scale: AS SHOWN
Drawn: TMA
Checked: DJB
Job No. 8080_P1
Sheet
C1.0
Of 10 Sheets

J:\8080P.1_City Tennis Court Parcel\dwg\C-GRADING PLAN_Tennis Court_2020_h3 - Copy.dwg 9/26/2023 10:19:21 AM

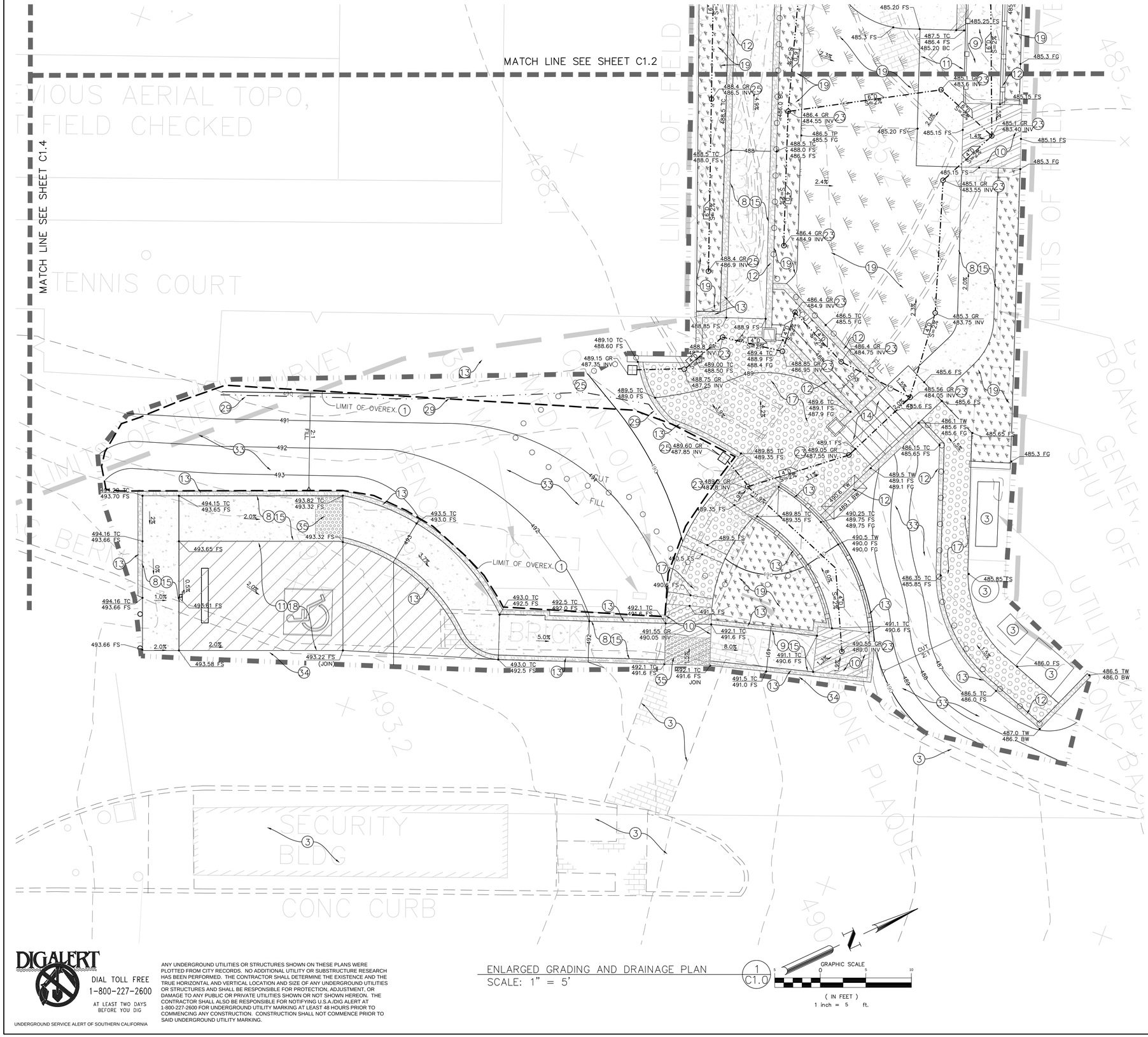
MATCH LINE SEE SHEET C1.2
MATCH LINE SEE SHEET C1.4
LIMIT OF OVEREX.
FILL
CUT
TENNIS COURT
SECURITY BLDG
CONC CURB
LIMITS OF FIELD
485.20 FS
485.25 FS
485.3 FG
485.15 FS
485.6 FS
485.65 FS
485.85 FS
486.0 FS
486.5 TW
486.0 BW
487.0 TW
486.2 BW
489.10 TC
488.60 FS
489.15 GR
487.35 INVO
489.5 TC
489.0 FS
489.60 GR
487.85 INV
490.5 FS
491.5 FS
491.55 GR
490.05 INV
490.55 GR
489.0 INV
493.20 TC
493.70 FS
494.15 TC
493.65 FS
493.82 TC
493.32 FS
493.5 TC
493.0 FS
494.16 TC
493.66 FS
493.65 FS
493.61 FS
493.66 FS
493.58 FS
493.22 FS
(JOIN)
493.0 TC
492.5 FS
492.5 TC
492.0 FS
492.1 TC
491.6 FS
491.6 FS
JOIN
491.5 TC
491.0 FS
491.1 TC
490.6 FS
490.6 FS
490.25 TC
489.75 FS
489.75 FG
490.5 TW
490.0 FS
490.0 FG
489.85 TC
489.35 FS
489.35 FS
489.6 TC
489.1 FS
487.9 FG
489.1 FS
489.05 GR
487.55 INV
489.4 TC
488.9 FS
488.4 FG
488.8 GR
487.3 INV
489.00 TC
488.50 FS
488.75 GR
487.25 INV
488.85 GR
486.95 INV
488.85 FS
488.9 FS
486.4 GR
484.9 INV
486.4 GR
484.75 INV
486.5 TC
485.5 FG
485.3 GR
483.75 INV
485.56 GR
484.05 INV
486.1 TW
485.6 FS
485.6 FG
486.15 TC
485.65 FS
485.35 TC
485.85 FS
491.1 TC
490.6 FS
486.5 TC
486.0 FS
485.3 FG
485.3 FG
485.15 FS
485.1 GR
483.55 INV
485.1 GR
483.40 INV
485.20 FS
485.3 FS
487.5 TC
486.4 FS
485.20 BC
486.4 GR
484.55 INV
485.5 TP
485.5 FG
488.5 TC
488.0 FS
486.5 FS
488.5 TC
488.0 FS
486.4 GR
484.9 INV
488.4 GR
486.9 INV
486.0 BC
484.5 FS
485.1 GR
483.6 INV
485.1 GR
483.6 INV
485.15 FS
485.3 FG
485.15 FS
485.3 FG
485.3 FG
485.15 FS
485.1 GR
483.55 INV
485.1 GR
483.40

CONSTRUCTION NOTES

1. OVER-EX. TO COMPETENT MATERIAL (2' MIN) AND RE-COMPACTION PER NOTES ON THIS SHEET FOR BUILDING PADS.
2. EXISTING STRUCTURE TO BE DEMOLISHED
3. EXISTING, PROTECT IN PLACE.
4. EXISTING UTILITY, PROTECT IN PLACE. UTILITIES ARE PROVIDED FOR REFERENCE ONLY AND SEPARATE PERMITS MAY BE REQUIRED.
5. EXISTING UTILITY / WALL TO BE REMOVED
6. CONSTRUCT NEW ATTACHED ACCESSORY STRUCTURE PER SEPARATE PLAN AND PERMIT.
7. CONSTRUCT NEW 3' MAXIMUM HEIGHT RETAINING WALL / RAISED SLAB PER SEPARATE PLAN AND PERMIT. FOR SCHEMATIC SEE DETAIL 1, SHEET C3.1.
8. CONSTRUCT ADA WALKWAY, 5% MAXIMUM
9. CONSTRUCT ADA RAMP, 8% MAXIMUM. SEE DETAIL 16, SHEET C3.0.
10. CONSTRUCT ADA LANDING, 2% MAXIMUM.
11. CONSTRUCT ADA PARKING STALL, 2% MAXIMUM.
12. CONSTRUCT 24" CURB PER DETAIL 1, SHEET C3.0.
13. CONSTRUCT 6" CURB PER DETAIL 1, SHEET C3.0
14. CONSTRUCT CONCRETE STAIRWAY, SEE DETAIL 13, SHEET C3.0.
15. CONSTRUCT PCC PAVEMENT, STRUCTURAL SECTION PER DETAIL 4, SHEET C3.0 AND FINISH PER OWNER.
16. CONSTRUCT DG PATIO AREA PER DETAIL 5, SHEET C3.0.
17. CONSTRUCT NEW PERVIOUS PAVER WALKWAY/PATIO AREA PER DETAIL 6, SHEET C3.0, FINISH PER OWNER.
18. CONSTRUCT NEW ASPHALT PAVING PER DETAIL 7, SHEET C3.0.
19. CONSTRUCT NEW PLANTER AREA, SEE LANDSCAPE PLANS.
20. CONSTRUCT NEW EROSION CONTROL OUTLET STRUCTURE PER DETAIL 9, SHEET C3.0.
21. ~~CONSTRUCT NEW 12" CONCRETE SWALE PER DETAIL 10, SHEET C3.0. ELEVATION AND SLOPE PER PLAN.~~
22. DOWNSPOUT; CONNECT TO UNDERGROUND SYSTEM PER DETAIL 12, SHEET C3.0.
23. INSTALL 4" ø ROUND NDS GRATE, ATRIUM IF IN LANDSCAPED AREA, FINISH PER OWNER. ELEVATIONS PER PLAN. CONNECT TO UNDERGROUND DRAINAGE SYSTEM. SEE DETAIL 10, SHEET C3.0.
24. INSTALL 6" ø ROUND NDS GRATE, ATRIUM IF IN LANDSCAPED AREA, FINISH PER OWNER. ELEVATIONS PER PLAN. CONNECT TO UNDERGROUND DRAINAGE SYSTEM. SEE DETAIL 10, SHEET C3.0.
25. INSTALL 12" NDS CATCH BASIN, ATRIUM IF IN LANDSCAPED AREA, FINISH PER OWNER. ELEVATIONS PER PLAN. CONNECT TO UNDERGROUND DRAINAGE SYSTEM. SEE DETAIL 11, SHEET C3.0.
26. INSTALL 4" PVC DRAINAGE PIPE SCHEDULE 40. SLOPE AND INVERT PER PLAN. MINIMUM SLOPE OF 1%
27. INSTALL 6" PVC DRAINAGE PIPE SCHEDULE 40. SLOPE AND INVERT PER PLAN. MINIMUM SLOPE OF 1%
28. INSTALL 8" PVC DRAINAGE PIPE SCHEDULE 40. SLOPE AND INVERT PER PLAN. MINIMUM SLOPE OF 2%
29. INSTALL 4" SCH 40 OR SDR 35 PERFORATED PIPE (HOLES DOWN) SUBDRAIN SURROUNDED WITH ONE CUBIC FOOT PER LINEAL FOOT OF ¾" GRAVEL. PER SOILS REPORT RECOMMENDATIONS. SEE DETAIL 12, SHEET C3.0.
30. INSTALL 4" PVC PIPE SCH-40 AS SUBDRAIN OUTLET THROUGH FACE OF WALL @ 20' O.C.. MIN. SLOPE OF 1%
31. ~~INSTALL FILTERRA 4X4 PER MANUFACTURER SPECIFICATIONS. SEE DETAIL 13, SHEET C3.0~~
32. INSTALL CLEANOUT PER DETAIL 14, SHEET C3.0.
33. SLOPE PLANTING ON CUT/FILL SLOPES PER COUNTY PLANTING GUIDELINE NOTES, THIS SHEET.
34. RECONSTRUCTION OF EXISTING ASPHALT PAVING TO MATCH NEW GRADES. TO BE FIELD VERIFIED PRIOR TO PAVING BY CITY AND RHCA PERSONNEL. MATCH EXISTING CROSS SECTION OF ASPHALT.
35. DETECTIBLE WARNING PER DETAIL 16, SHEET C3.0.

CABANA
FF=486.75
PAD=486.25

LIMIT OF OVEREX

MATCH LINE SEE SHEET C1.3

MATCH LINE SEE SHEET C1.4

MATCH LINE SEE SHEET C1.1

ROLLING HILLS TRACT
M.B. 201, PGS 29-35

LIMITS OF FIELD SURVEY

PREVIOUS AERIAL TOPO, NOT FIELD CHECKED

TENNIS COURT

LEGEND

- PROPOSED BUILDING
- PROPOSED PATIO
- PROPOSED CONCRETE
- PROPOSED ASPHALT
- PROPOSED PAVERS
- PROPOSED D.G.
- PROPOSED CURB
- PROPOSED RETAINING WALL
- PROPOSED LANDSCAPING
- LIMIT OF GRADING
- CUT/FILL DAYLIGHT LINE
- WALL SUBDRAIN

ACROYNMS

A.C.	ACRES
B.W.	BOTTOM OF WALL
(E)	EXISTING
F.F	FINISHED FLOOR
F.G	FINISHED GRADE
F.G.P	FINISHED GRADE OF PLANTER
F.L.	FLOW LINE
F.S.	FINISHED SURFACE
G.R.	GRATE
H.P.	HIGH POINT
INV.	INVERT
L.I.D.	LOW IMPACT DEVELOPMENT
(P)	PROPOSED
P.L.	PROPERTY LINE
S.F.	SQUARE FEET
T.C.	TOP OF CURB
T.W.	TOP OF WALL

ENLARGED GRADING AND DRAINAGE PLAN
SCALE: 1" = 5'

1 / C1.2

GRAPHIC SCALE
0 5 10
(IN FEET)
1 inch = 5 ft.

DIGALERT
DIAL TOLL FREE
1-800-227-2600
AT LEAST TWO DAYS BEFORE YOU DIG
UNDERGROUND SERVICE ALERT OF SOUTHERN CALIFORNIA

ANY UNDERGROUND UTILITIES OR STRUCTURES SHOWN ON THESE PLANS WERE PLOTTED FROM CITY RECORDS. NO ADDITIONAL UTILITY OR SUBSTRUCTURE RESEARCH HAS BEEN PERFORMED. THE CONTRACTOR SHALL DETERMINE THE EXISTENCE AND THE TRUE HORIZONTAL AND VERTICAL LOCATION AND SIZE OF ANY UNDERGROUND UTILITIES OR STRUCTURES AND SHALL BE RESPONSIBLE FOR PROTECTION, ADJUSTMENT, OR DAMAGE TO ANY PUBLIC OR PRIVATE UTILITIES SHOWN OR NOT SHOWN HEREON. THE CONTRACTOR SHALL ALSO BE RESPONSIBLE FOR NOTIFYING U.S.A./DIG ALERT AT 1-800-227-2600 FOR UNDERGROUND UTILITY MARKING AT LEAST 48 HOURS PRIOR TO COMMENCING ANY CONSTRUCTION. CONSTRUCTION SHALL NOT COMMENCE PRIOR TO SAID UNDERGROUND UTILITY MARKING.

BUILDING AND SAFETY DIVISION
Department of Public Works
DRAINAGE & GRADING APPROVED
UNDER LOS ANGELES COUNTY CODE
TITLE 26
awwong
PUBLIC WORKS
12/26/2023 11:41:52 AM

This set of plans and specifications must be kept at the job site at all times, and it is unlawful to make any changes, modifications or alterations to these plans or specifications without the prior written permission of the Building Official. The stamping of this set of plans and specifications SHALL NOT, under any circumstances, be deemed to permit or to be an approval of any work or activity that violates any provisions of any County Ordinance or State Law.

Revisions	By

Bolton Engineering Corp.
Civil Engineering and Surveying
25834 Narbonne Avenue Suite 210
Lomita, Ca. 90717
Ph: 310-325-5580 Fax: 310-325-5581

CLIENT: CITY OF ROLLING HILLS & ROLLING HILLS COMMUNITY ASSOCIATION
2 PORTUGUESE BEND ROAD
ROLLING HILLS, CA 90274

TITLE: ENLARGED GRADING AND DRAINAGE PLAN
TENNIS COURT AREA IMPROVEMENTS: CABANA
1 PORTUGUESE BEND ROAD
ROLLING HILLS, CA 90274

Date: Sept. 24,2023
Scale: AS SHOWN
Drawn: TMA
Checked: DJB
Job No. 8080_P1
Sheet C1.2
Of 10 Sheets

J:\8080P.1_City Tennis Court Parcel\dwg\C-GRADING PLAN_Tennis Court_2020_h3 - Copy.dwg 9/26/2023 10:19:27 AM

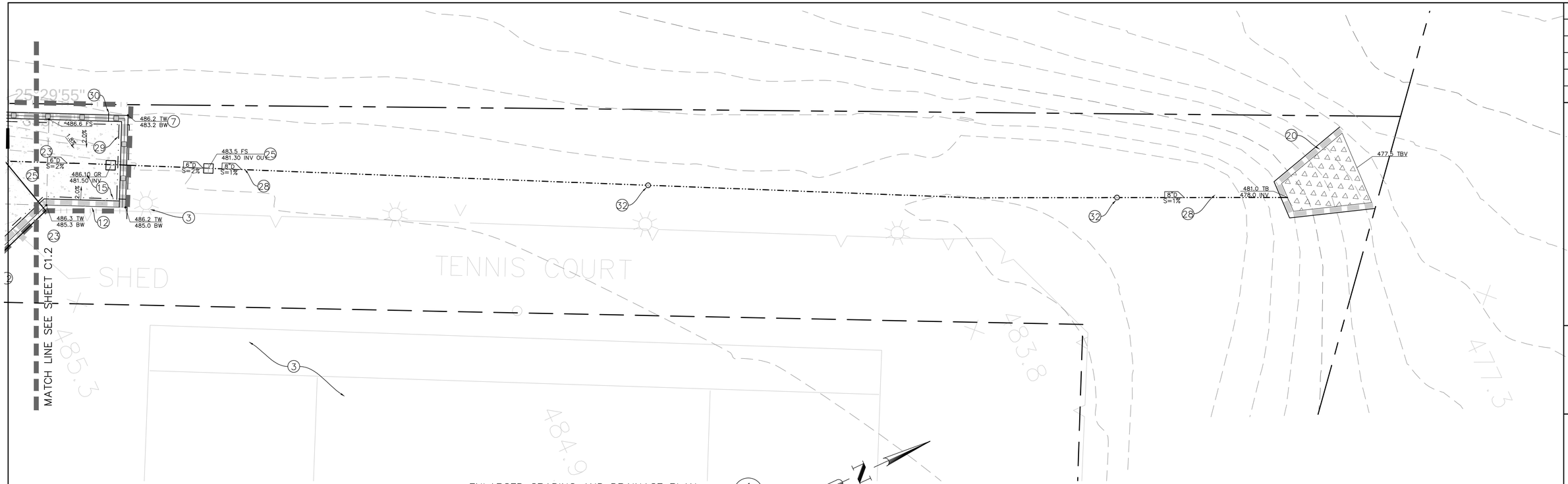

ENLARGED GRADING AND DRAINAGE PLAN (1 / C1.3)
SCALE: 1" = 5'

GRAPHIC SCALE
5 0 5 10
(IN FEET)
1 inch = 5 ft.

DIGALERT
DIAL TOLL FREE
1-800-227-2600
AT LEAST TWO DAYS BEFORE YOU DIG
UNDERGROUND SERVICE ALERT OF SOUTHERN CALIFORNIA

ANY UNDERGROUND UTILITIES OR STRUCTURES SHOWN ON THESE PLANS WERE PLOTTED FROM CITY RECORDS. NO ADDITIONAL UTILITY OR SUBSTRUCTURE RESEARCH HAS BEEN PERFORMED. THE CONTRACTOR SHALL DETERMINE THE EXISTENCE AND THE TRUE HORIZONTAL AND VERTICAL LOCATION AND SIZE OF ANY UNDERGROUND UTILITIES OR STRUCTURES AND SHALL BE RESPONSIBLE FOR PROTECTION, ADJUSTMENT, OR DAMAGE TO ANY PUBLIC OR PRIVATE UTILITIES SHOWN OR NOT SHOWN HEREON. THE CONTRACTOR SHALL ALSO BE RESPONSIBLE FOR NOTIFYING U.S.A./DIG ALERT AT 1-800-227-2600 FOR UNDERGROUND UTILITY MARKING AT LEAST 48 HOURS PRIOR TO COMMENCING ANY CONSTRUCTION. CONSTRUCTION SHALL NOT COMMENCE PRIOR TO SAID UNDERGROUND UTILITY MARKING.

BUILDING AND SAFETY DIVISION
Department of Public Works
DRAINAGE & GRADING APPROVED
UNDER LOS ANGELES COUNTY CODE
TITLE 26
anwong
PUBLIC WORKS
12/26/2023 11:41:52 AM
This set of plans and specifications shall be kept at the job site at all times, and it is unlawful to make any changes, modifications or alterations to these plans or specifications without the prior written permission of the Building Official. The stamping of this set of plans and specifications SHALL NOT, under any circumstances, be deemed to permit or to be an approval of any work or activity that violates any provisions of any County Ordinance or State Law.

LEGEND

- PROPOSED BUILDING
- PROPOSED PATIO
- PROPOSED CONCRETE
- PROPOSED ASPHALT
- PROPOSED PAVERS
- PROPOSED D.G.
- PROPOSED CURB
- PROPOSED RETAINING WALL
- PROPOSED LANDSCAPING
- LIMIT OF GRADING
- ○ ○ ○ ○CUT/FILL DAYLIGHT LINE
- —·—·— WALL SUBDRAIN

ACROYNMS

A.C.	ACRES
B.W.	BOTTOM OF WALL
(E)	EXISTING
F.F	FINISHED FLOOR
F.G	FINISHED GRADE
F.G.P	FINISHED GRADE OF PLANTER
F.L.	FLOW LINE
F.S.	FINISHED SURFACE
G.R.	GRATE
H.P.	HIGH POINT
INV.	INVERT
L.I.D.	LOW IMPACT DEVELOPMENT
(P)	PROPOSED
P.L.	PROPERTY LINE
S.F.	SQUARE FEET
T.C.	TOP OF CURB
T.W.	TOP OF WALL

SLOPE PLANTING, IRRIGATION, AND EROSION CONTROL

THE SURFACE OF ALL CUT SLOPES MORE THAN 5 FEET IN HEIGHT AND FILL SLOPES MORE THAN 3 FEET IN HEIGHT SHALL BE PROTECTED AGAINST DAMAGE FROM EROSION BY PLANTING WITH GRASS OR GROUND COVER PLANTS. (J110.1) SLOPES EXCEEDING 15 FEET IN VERTICAL HEIGHT SHALL ALSO BE PLANTED WITH SHRUBS, SPACED AT NOT TO EXCEED 10 FEET ON CENTERS; OR TREES, SPACED AT NOT TO EXCEED 20 FEET ON CENTER; OR A COMBINATION OF SHRUBS AND TREES AT EQUIVALENT SPACING, IN ADDITION TO THE GRASS OR GROUND COVER PLANTS. THE PLANTS SELECTED AND PLANTING METHODS USED SHALL BE SUITABLE FOR THE SOIL AND CLIMATIC CONDITIONS OF THE SITE.

FIRE PREVENTION NOTES:

PERMISSION TO OPERATE IN VERY HIGH FIRE HAZARD SEVERITY ZONE MUST BE OBTAINED FROM THE FIRE PREVENTION BUREAU OR THE LOCAL FIRE STATION PRIOR TO COMMENCING WORK.

EASEMENTS:

EASEMENTS ARE TO BE STAKED AND MAINTAINED THROUGHOUT CONSTRUCTION

SPOILS:

NO DIRT SHALL BE PLACED ON SITE, IN EXCESS OF 12" IN HEIGHT, UNLESS DEPICTED IN THIS GRADING PLAN.

SOILS

THE UPPER ON-SITE SOILS HAVE A HIGH EXPANSION POTENTIAL

UTILITIES

UTILITIES SUCH AS WATER, ELECTRICAL, PLUMBING, MECHANICAL, AND SEWER SHOWN ON GRADING PLANS MAY REQUIRED A SEPARATE PERMIT.

CONSTRUCTION NOTES

1. OVER-EX. TO COMPETENT MATERIAL (2' MIN) AND RE-COMPACTION PER NOTES ON THIS SHEET FOR BUILDING PADS.
2. EXISTING STRUCTURE TO BE DEMOLISHED
3. EXISTING, PROTECT IN PLACE.
4. EXISTING UTILITY, PROTECT IN PLACE. UTILITIES ARE PROVIDED FOR REFERENCE ONLY AND SEPARATE PERMITS MAY BE REQUIRED.
5. EXISTING UTILITY / WALL TO BE REMOVED
6. CONSTRUCT NEW ATTACHED ACCESSORY STRUCTURE PER SEPARATE PLAN AND PERMIT.
7. CONSTRUCT NEW 3' MAXIMUM HEIGHT RETAINING WALL / RAISED SLAB PER SEPARATE PLAN AND PERMIT. FOR SCHEMATIC SEE DETAIL 1, SHEET C3.1.
8. CONSTRUCT ADA WALKWAY, 5% MAXIMUM
9. CONSTRUCT ADA RAMP, 8% MAXIMUM. SEE DETAIL 16, SHEET C3.0.
10. CONSTRUCT ADA LANDING, 2% MAXIMUM.
11. CONSTRUCT ADA PARKING STALL, 2% MAXIMUM.
12. CONSTRUCT 24" CURB PER DETAIL 1, SHEET C3.0.
13. CONSTRUCT 6" CURB PER DETAIL 1, SHEET C3.0
14. CONSTRUCT CONCRETE STAIRWAY, SEE DETAIL 13, SHEET C3.0.
15. CONSTRUCT PCC PAVEMENT, STRUCTURAL SECTION PER DETAIL 4, SHEET C3.0 AND FINISH PER OWNER.
16. CONSTRUCT DG PATIO AREA PER DETAIL 5, SHEET C3.0.
17. CONSTRUCT NEW PERVIOUS PAVER WALKWAY/PATIO AREA PER DETAIL 6, SHEET C3.0, FINISH PER OWNER.
18. CONSTRUCT NEW ASPHALT PAVING PER DETAIL 7, SHEET C3.0.
19. CONSTRUCT NEW PLANTER AREA, SEE LANDSCAPE PLANS.
20. CONSTRUCT NEW EROSION CONTROL OUTLET STRUCTURE PER DETAIL 9, SHEET C3.0.
21. ~~CONSTRUCT NEW 12" CONCRETE SWALE PER DETAIL 10, SHEET C3.0. ELEVATION AND SLOPE PER PLAN.~~
22. DOWNSPOUT; CONNECT TO UNDERGROUND SYSTEM PER DETAIL 12, SHEET C3.0.
23. INSTALL 4" ø ROUND NDS GRATE, ATRIUM IF IN LANDSCAPED AREA, FINISH PER OWNER. ELEVATIONS PER PLAN. CONNECT TO UNDERGROUND DRAINAGE SYSTEM. SEE DETAIL 10, SHEET C3.0.
24. INSTALL 6" ø ROUND NDS GRATE, ATRIUM IF IN LANDSCAPED AREA, FINISH PER OWNER. ELEVATIONS PER PLAN. CONNECT TO UNDERGROUND DRAINAGE SYSTEM. SEE DETAIL 10, SHEET C3.0.
25. INSTALL 12" NDS CATCH BASIN, ATRIUM IF IN LANDSCAPED AREA, FINISH PER OWNER. ELEVATIONS PER PLAN. CONNECT TO UNDERGROUND DRAINAGE SYSTEM. SEE DETAIL 11, SHEET C3.0.
26. INSTALL 4" PVC DRAINAGE PIPE SCHEDULE 40. SLOPE AND INVERT PER PLAN. MINIMUM SLOPE OF 1%
27. INSTALL 6" PVC DRAINAGE PIPE SCHEDULE 40. SLOPE AND INVERT PER PLAN. MINIMUM SLOPE OF 1%
28. INSTALL 8" PVC DRAINAGE PIPE SCHEDULE 40. SLOPE AND INVERT PER PLAN. MINIMUM SLOPE OF 2%
29. INSTALL 4" SCH 40 OR SDR 35 PERFORATED PIPE (HOLES DOWN) SUBDRAIN SURROUNDED WITH ONE CUBIC FOOT PER LINEAL FOOT OF ¾" GRAVEL. PER SOILS REPORT RECOMMENDATIONS. SEE DETAIL 12, SHEET C3.0.
30. INSTALL 4" PVC PIPE SCH-40 AS SUBDRAIN OUTLET THROUGH FACE OF WALL @ 20' O.C.. MIN. SLOPE OF 1%.
31. ~~INSTALL FILTERRA 4X4 PER MANUFACTURER SPECIFICATIONS. SEE DETAIL 13, SHEET C3.0~~
32. INSTALL CLEANOUT PER DETAIL 14, SHEET C3.0.
33. SLOPE PLANTING ON CUT/FILL SLOPES PER COUNTY PLANTING GUIDELINE NOTES, THIS SHEET.
34. RECONSTRUCTION OF EXISTING ASPHALT PAVING TO MATCH NEW GRADES. TO BE FIELD VERIFIED PRIOR TO PAVING BY CITY AND RHCA PERSONNEL. MATCH EXISTING CROSS SECTION OF ASPHALT.
35. DETECTIBLE WARNING PER DETAIL 16, SHEET C3.0.

Revisions	By

Bolton Engineering Corp.
Civil Engineering and Surveying
25834 Narbonne Avenue Suite 210
Lomita, Ca. 90717
Ph: 310-325-5580 Fax: 310-325-5581

CLIENT: CITY OF ROLLING HILLS &
ROLLING HILLS COMMUNITY ASSOCIATION
2 PORTUGUESE BEND ROAD
ROLLING HILLS, CA 90274

TITLE: ENLARGED GRADING AND DRAINAGE PLAN
TENNIS COURT AREA IMPROVEMENTS: NORTH
1 PORTUGUESE BEND ROAD
ROLLING HILLS, CA 90274

Date: Sept. 24,2023
Scale: AS SHOWN
Drawn: TMA
Checked: DJB
Job No. 8080_P1
Sheet C1.3
Of 10 Sheets

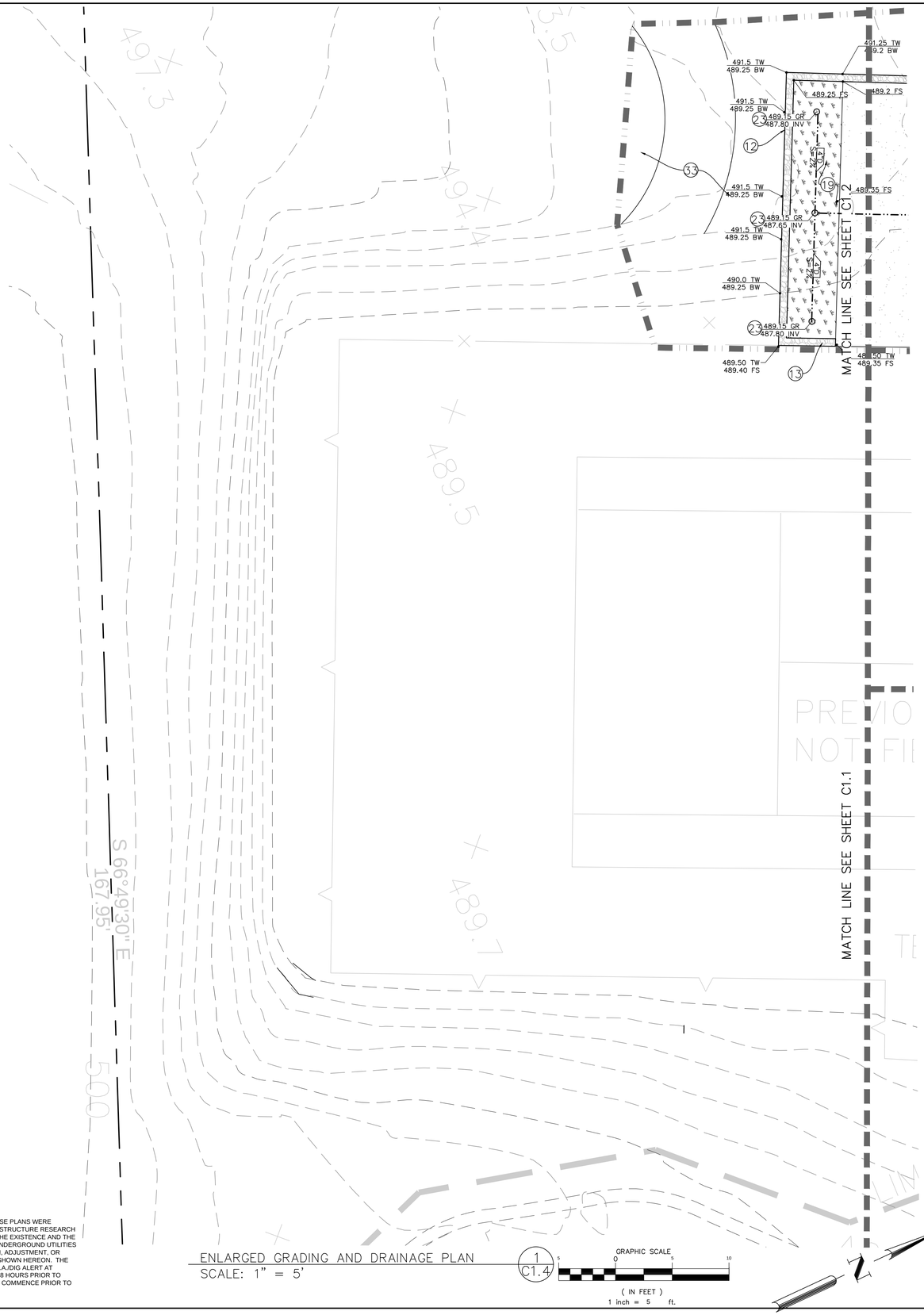

ENLARGED GRADING AND DRAINAGE PLAN
SCALE: 1" = 5'

1 / C1.4

GRAPHIC SCALE
5 0 5 10
(IN FEET)
1 inch = 5 ft.

SLOPE PLANTING, IRRIGATION, AND EROSION CONTROL

THE SURFACE OF ALL CUT SLOPES MORE THAN 5 FEET IN HEIGHT AND FILL SLOPES MORE THAN 3 FEET IN HEIGHT SHALL BE PROTECTED AGAINST DAMAGE FROM EROSION BY PLANTING WITH GRASS OR GROUND COVER PLANTS. (J110.1) SLOPES EXCEEDING 15 FEET IN VERTICAL HEIGHT SHALL ALSO BE PLANTED WITH SHRUBS, SPACED AT NOT TO EXCEED 10 FEET ON CENTERS; OR TREES, SPACED AT NOT TO EXCEED 20 FEET ON CENTER; OR A COMBINATION OF SHRUBS AND TREES AT EQUIVALENT SPACING, IN ADDITION TO THE GRASS OR GROUND COVER PLANTS. THE PLANTS SELECTED AND PLANTING METHODS USED SHALL BE SUITABLE FOR THE SOIL AND CLIMATIC CONDITIONS OF THE SITE.

FIRE PREVENTION NOTES:

PERMISSION TO OPERATE IN VERY HIGH FIRE HAZARD SEVERITY ZONE MUST BE OBTAINED FROM THE FIRE PREVENTION BUREAU OR THE LOCAL FIRE STATION PRIOR TO COMMENCING WORK.

EASEMENTS:

EASEMENTS ARE TO BE STAKED AND MAINTAINED THROUGHOUT CONSTRUCTION

SPOILS:

NO DIRT SHALL BE PLACED ON SITE, IN EXCESS OF 12" IN HEIGHT, UNLESS DEPICTED IN THIS GRADING PLAN.

SOILS

THE UPPER ON-SITE SOILS HAVE A HIGH EXPANSION POTENTIAL

UTILITIES

UTILITIES SUCH AS WATER, ELECTRICAL, PLUMBING, MECHANICAL, AND SEWER SHOWN ON GRADING PLANS MAY REQUIRED A SEPARATE PERMIT.

CONSTRUCTION NOTES

1. OVER-EX. TO COMPETENT MATERIAL (2' MIN) AND RE-COMPACTION PER NOTES ON THIS SHEET FOR BUILDING PADS.
2. EXISTING STRUCTURE TO BE DEMOLISHED
3. EXISTING, PROTECT IN PLACE.
4. EXISTING UTILITY, PROTECT IN PLACE. UTILITIES ARE PROVIDED FOR REFERENCE ONLY AND SEPARATE PERMITS MAY BE REQUIRED.
5. EXISTING UTILITY / WALL TO BE REMOVED
6. CONSTRUCT NEW ATTACHED ACCESSORY STRUCTURE PER SEPARATE PLAN AND PERMIT.
7. CONSTRUCT NEW 3' MAXIMUM HEIGHT RETAINING WALL / RAISED SLAB PER SEPARATE PLAN AND PERMIT. FOR SCHEMATIC SEE DETAIL 1, SHEET C3.1.
8. CONSTRUCT ADA WALKWAY, 5% MAXIMUM
9. CONSTRUCT ADA RAMP, 8% MAXIMUM. SEE DETAIL 16, SHEET C3.0.
10. CONSTRUCT ADA LANDING, 2% MAXIMUM.
11. CONSTRUCT ADA PARKING STALL, 2% MAXIMUM.
12. CONSTRUCT 24" CURB PER DETAIL 1, SHEET C3.0.
13. CONSTRUCT 6" CURB PER DETAIL 1, SHEET C3.0
14. CONSTRUCT CONCRETE STAIRWAY, SEE DETAIL 13, SHEET C3.0.
15. CONSTRUCT PCC PAVEMENT, STRUCTURAL SECTION PER DETAIL 4, SHEET C3.0 AND FINISH PER OWNER.
16. CONSTRUCT DG PATIO AREA PER DETAIL 5, SHEET C3.0.
17. CONSTRUCT NEW PERVIOUS PAVER WALKWAY/PATIO AREA PER DETAIL 6, SHEET C3.0, FINISH PER OWNER.
18. CONSTRUCT NEW ASPHALT PAVING PER DETAIL 7, SHEET C3.0.
19. CONSTRUCT NEW PLANTER AREA, SEE LANDSCAPE PLANS.
20. CONSTRUCT NEW EROSION CONTROL OUTLET STRUCTURE PER DETAIL 9, SHEET C3.0.
21. ~~CONSTRUCT NEW 12" CONCRETE SWALE PER DETAIL 10, SHEET C3.0. ELEVATION AND SLOPE PER PLAN.~~
22. DOWNSPOUT; CONNECT TO UNDERGROUND SYSTEM PER DETAIL 12, SHEET C3.0.
23. INSTALL 4" ø ROUND NDS GRATE, ATRIUM IF IN LANDSCAPED AREA, FINISH PER OWNER. ELEVATIONS PER PLAN. CONNECT TO UNDERGROUND DRAINAGE SYSTEM. SEE DETAIL 10, SHEET C3.0.
24. INSTALL 6" ø ROUND NDS GRATE, ATRIUM IF IN LANDSCAPED AREA, FINISH PER OWNER. ELEVATIONS PER PLAN. CONNECT TO UNDERGROUND DRAINAGE SYSTEM. SEE DETAIL 10, SHEET C3.0.
25. INSTALL 12" NDS CATCH BASIN, ATRIUM IF IN LANDSCAPED AREA, FINISH PER OWNER. ELEVATIONS PER PLAN. CONNECT TO UNDERGROUND DRAINAGE SYSTEM. SEE DETAIL 11, SHEET C3.0.
26. INSTALL 4" PVC DRAINAGE PIPE SCHEDULE 40. SLOPE AND INVERT PER PLAN. MINIMUM SLOPE OF 1%
27. INSTALL 6" PVC DRAINAGE PIPE SCHEDULE 40. SLOPE AND INVERT PER PLAN. MINIMUM SLOPE OF 1%
28. INSTALL 8" PVC DRAINAGE PIPE SCHEDULE 40. SLOPE AND INVERT PER PLAN. MINIMUM SLOPE OF 2%
29. INSTALL 4" SCH 40 OR SDR 35 PERFORATED PIPE (HOLES DOWN) SUBDRAIN SURROUNDED WITH ONE CUBIC FOOT PER LINEAL FOOT OF ¾" GRAVEL. PER SOILS REPORT RECOMMENDATIONS. SEE DETAIL 12, SHEET C3.0.
30. INSTALL 4" PVC PIPE SCH-40 AS SUBDRAIN OUTLET THROUGH FACE OF WALL @ 20' O.C.. MIN. SLOPE OF 1%
31. ~~INSTALL FILTERRA 4X4 PER MANUFACTURER SPECIFICATIONS. SEE DETAIL 13, SHEET C3.0~~
32. INSTALL CLEANOUT PER DETAIL 14, SHEET C3.0.
33. SLOPE PLANTING ON CUT/FILL SLOPES PER COUNTY PLANTING GUIDELINE NOTES, THIS SHEET.
34. RECONSTRUCTION OF EXISTING ASPHALT PAVING TO MATCH NEW GRADES. TO BE FIELD VERIFIED PRIOR TO PAVING BY CITY AND RHCA PERSONNEL. MATCH EXISTING CROSS SECTION OF ASPHALT.
35. DETECTIBLE WARNING PER DETAIL 16, SHEET C3.0.

DIGALERT
DIAL TOLL FREE
1-800-227-2600
AT LEAST TWO DAYS BEFORE YOU DIG
UNDERGROUND SERVICE ALERT OF SOUTHERN CALIFORNIA

ANY UNDERGROUND UTILITIES OR STRUCTURES SHOWN ON THESE PLANS WERE PLOTTED FROM CITY RECORDS. NO ADDITIONAL UTILITY OR SUBSTRUCTURE RESEARCH HAS BEEN PERFORMED. THE CONTRACTOR SHALL DETERMINE THE EXISTENCE AND THE TRUE HORIZONTAL AND VERTICAL LOCATION AND SIZE OF ANY UNDERGROUND UTILITIES OR STRUCTURES AND SHALL BE RESPONSIBLE FOR PROTECTION, ADJUSTMENT, OR DAMAGE TO ANY PUBLIC OR PRIVATE UTILITIES SHOWN OR NOT SHOWN HEREON. THE CONTRACTOR SHALL ALSO BE RESPONSIBLE FOR NOTIFYING U.S.A./DIG ALERT AT 1-800-227-2600 FOR UNDERGROUND UTILITY MARKING AT LEAST 48 HOURS PRIOR TO COMMENCING ANY CONSTRUCTION. CONSTRUCTION SHALL NOT COMMENCE PRIOR TO SAID UNDERGROUND UTILITY MARKING.

BUILDING AND SAFETY DIVISION
Department of Public Works
DRAINAGE & GRADING APPROVED
UNDER LOS ANGELES COUNTY CODE
TITLE 26
anwong
PUBLIC WORKS
12/26/2023 11:41:52 AM
This set of plans and specifications must be kept at the job site at all times; and it is unlawful to make any changes, modifications or additions to these plans or specifications without the prior written permission of the Building Official. The stamping of this set of plans and specifications SHALL NOT, under any circumstances, be deemed to permit or to be an approval of any work or activity that violates any provisions of any County Ordinance or State Law

Revisions	By

Bolton Engineering Corp.
Civil Engineering and Surveying
25834 Narbonne Avenue Suite 210
Lomita, Ca. 90717
Ph: 310-325-5580 Fax: 310-325-5581

CLIENT: CITY OF ROLLING HILLS &
ROLLING HILLS COMMUNITY ASSOCIATION
2 PORTUGUESE BEND ROAD
ROLLING HILLS, CA 90274

TITLE: ENLARGED GRADING AND DRAINAGE PLAN
TENNIS COURT AREA IMPROVEMENTS: ENTRY
1 PORTUGUESE BEND ROAD
ROLLING HILLS, CA 90274

Date: Sept. 24,2023
Scale: AS SHOWN
Drawn: TMA
Checked: DJB
Job No. 8080_P1
Sheet
C1.4
Of 10 Sheets

J:\8080P.1_City Tennis Court Parcel\dwg\C-GRADING PLAN_Tennis Court_2020_h3 - Copy.dwg 9/26/2023 10:19:31 AM

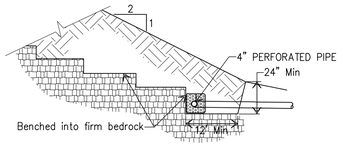

A subdrain system shall be installed behind the proposed fill slope. The subdrain system shall consist of a drain located at the rear of the keyway above the toe of the slope. The subdrain shall consist of 4-inch perforated pipes, with perforations facing downward. It shall be surrounded by a minimum of 3 cubic feet of gravel for each linear foot of pipe. The gravels shall be wrapped by filter fabric. The subdrain shall exit to the face of the fill slope through non-perforated pipes. Subdrain outlets shall be provided every 25 linear feet along the length of the slope.

Typical Key and Bench Fill Slope — 1 / C2.0

N.T.S.

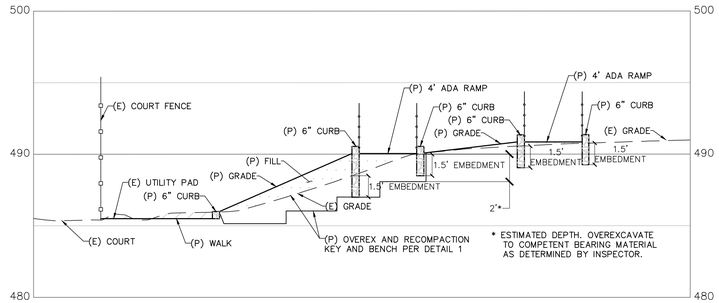

SECTION E-E — E / C2.0

SCALE: 1" = 5'

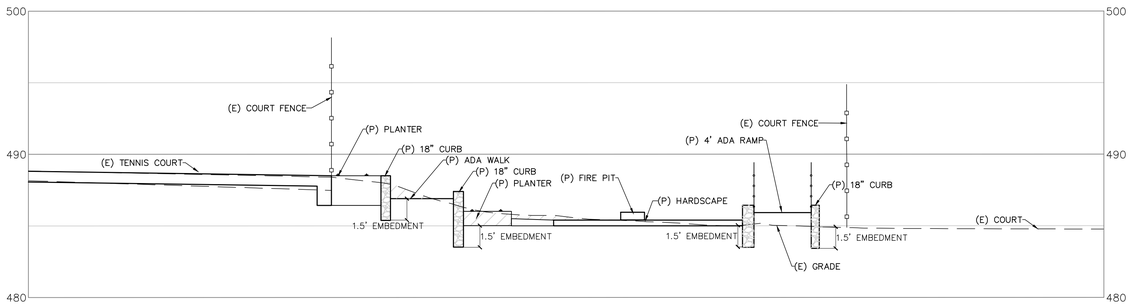

SECTION D-D — D / C2.0

SCALE: 1" = 5'

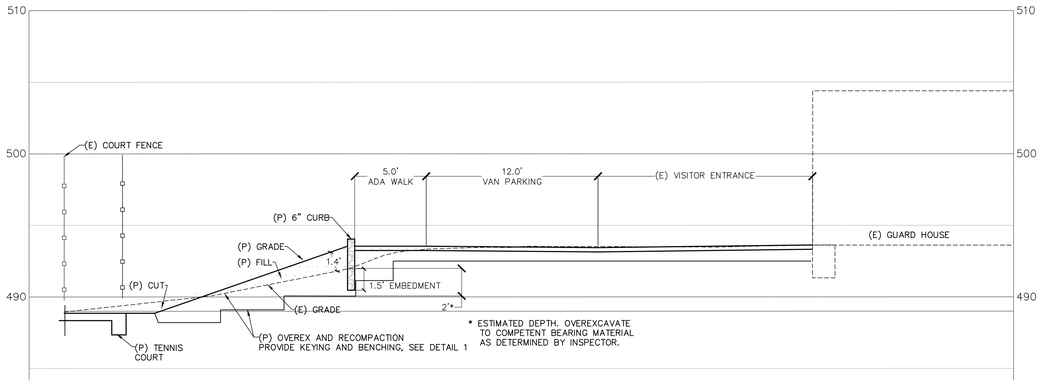

SECTION C-C — C / C2.0

SCALE: 1" = 5'

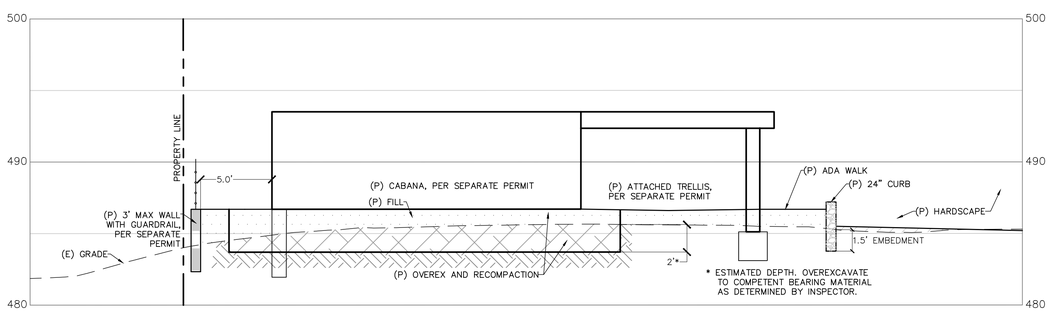

SECTION B-B — B / C2.0

SCALE: 1" = 5'

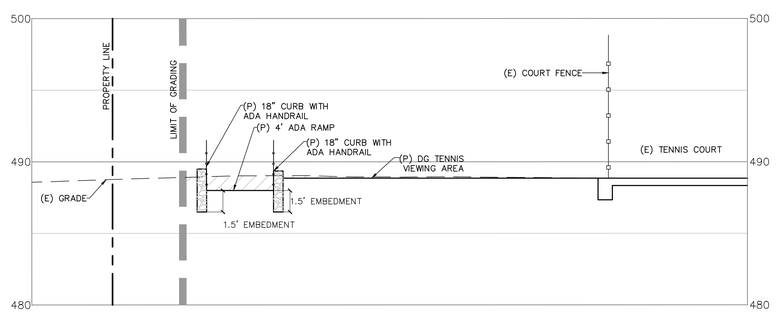

SECTION A-A — A / C2.0

SCALE: 1" = 5'

BUILDING AND SAFETY DIVISION
Department of Public Works
DRAINAGE & GRADING APPROVED
UNDER LOS ANGELES COUNTY CODE
TITLE 26
anwong
PUBLIC WORKS
12/26/2023 11:41:52 AM
This set of plans and specifications must be kept at the job site at all times and it is unlawful to make any changes, modifications or alterations to these plans or specifications without the prior written permission of the Building Official. The stamping of this set of plans and specifications SHALL NOT, under any circumstances, be deemed to permit or to be an approval of any work or activity that violates any provisions of any County Ordinance or State Law

Revisions	By

Bolton Engineering Corp.
Civil Engineering and Surveying
25834 Narbonne Avenue Suite 210
Lomita, Ca. 90717
Ph: 310-325-5580 Fax: 310-325-5581

CLIENT: CITY OF ROLLING HILLS &
ROLLING HILLS COMMUNITY ASSOCIATION
2 PORTUGUESE BEND ROAD
ROLLING HILLS, CA 90274

TITLE: SITE SECTIONS & DETAILS
TENNIS COURT AREA IMPROVEMENTS
1 PORTUGUESE BEND ROAD
ROLLING HILLS, CA 90274

Date: Sept. 24,2023
Scale: AS SHOWN
Drawn: TMA
Checked: DJB
Job No. 8080_P1
Sheet
C2.0
Of 10 Sheets

J:\8080P.1_City Tennis Court Parcel\dwg\C-GRADING PLAN_Tennis Court_2020_h3 - Copy.dwg 9/26/2023 10:19:36 AM

NOTES:

1. Maximum slopes of adjoining gutters, the road surface immediately adjacent to the curb ramp or accessible route shall not exceed 5 percent within 4'-0" of the top and bottom of the curb ramp.
2. Curb ramps shall have a detectable warning surface that extends the full width and 3'-0" depth of the ramp. Detectable Warning Surfaces shall conform to the details on this plan.
3. The edge of the detectable warning surface nearest the street shall be between 6" and 8" from the gutter flowline.

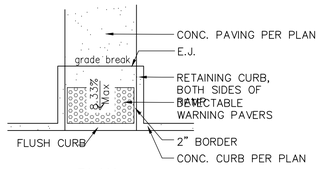

PLAN

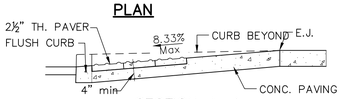

SECTION A–A

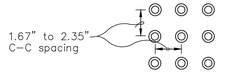

RAISED TRUNCATED DOME PATTERN (IN–LINE)
DETECTABLE WARNING SURFACE
See Note 2

Curb Ramp Detail 16 C3.0
N.T.S.

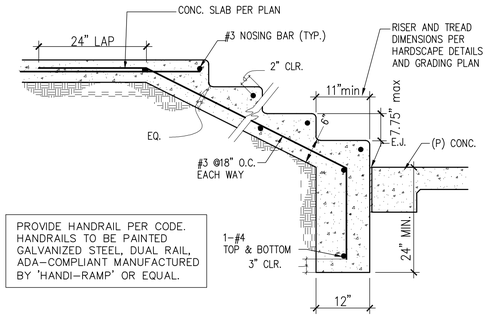

13 C3.0 Concrete Stairs
N.T.S.

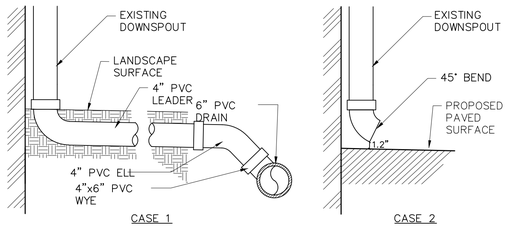

DOWNSPOUT DETAIL
N.T.S.
12 C3.0

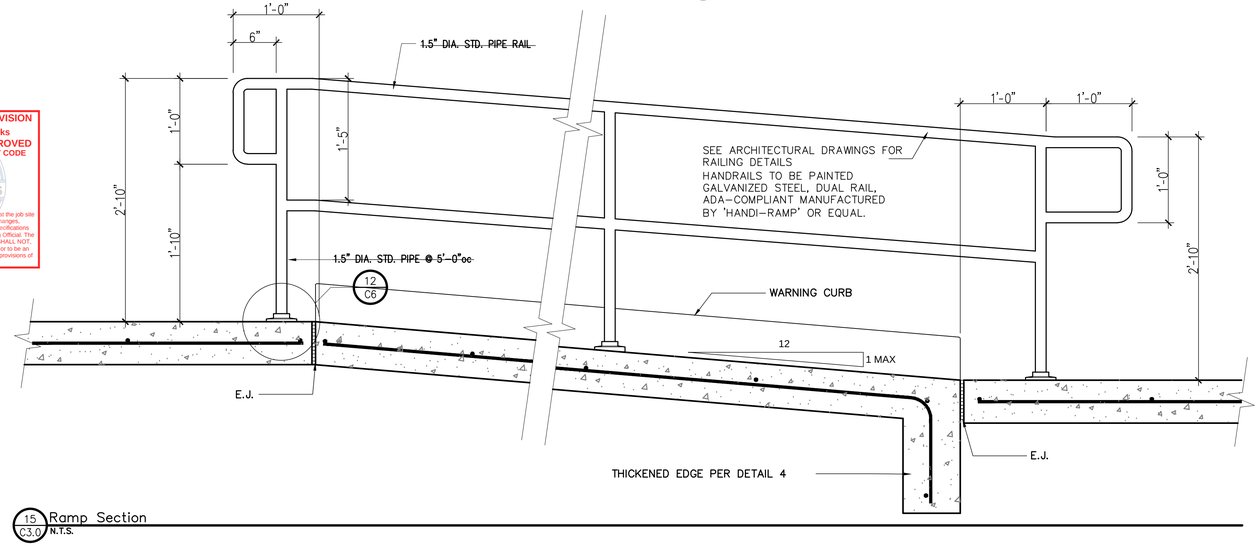

15 C3.0 Ramp Section
N.T.S.

BUILDING AND SAFETY DIVISION
Department of Public Works
DRAINAGE & GRADING APPROVED
UNDER LOS ANGELES COUNTY CODE
TITLE 26
anwong
PUBLIC WORKS
12/26/2023 11:41:52 AM
This set of plans and specifications must be kept at the job site at all times, and it is unlawful to make any changes, modifications or additions to these plans or specifications without the prior written permission of the Building Official. The stamping of this set of plans and specifications SHALL NOT, under any circumstances, be deemed to permit or to be an approval of any work or activity that violates any provisions of any County Ordinance or State Law.

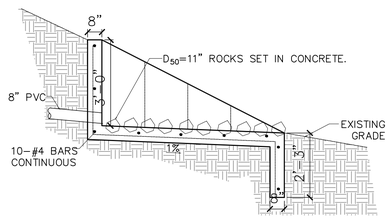

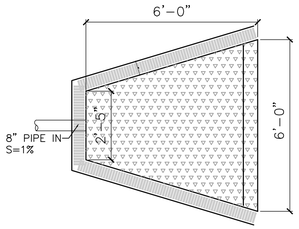

Outfall 9 C3.0
N.T.S.

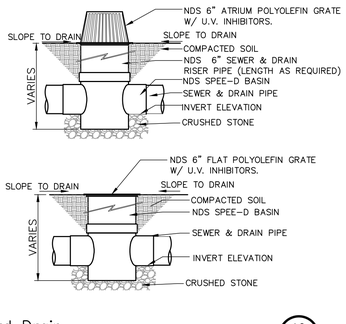

Yard Drain 10 C3.0
N.T.S.

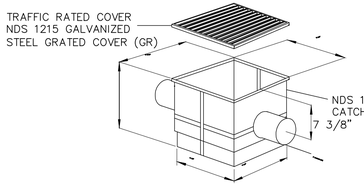

**NOTE: PROVIDE RISER (NDS 1216) AS NECESSARY TO ACCOMMODATE SPECIFIED GR/INV ELEVATIONS.

NDS Catch Basin 11 C3.0
N.T.S.

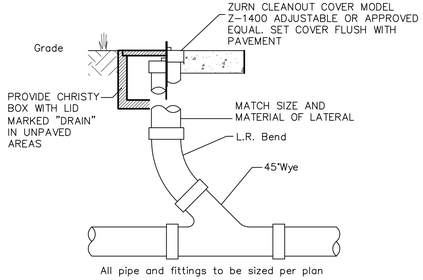

All pipe and fittings to be sized per plan

Drain Cleanout 14 C3.0
N.T.S.

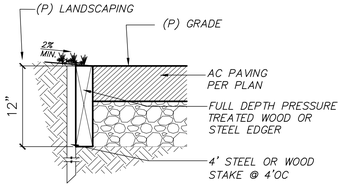

ALTERNATE-EDGER

NOTES:
1. FOR ALL OTHER CURBS, PLEASE SEE APWA STANDARD DETAILS.
2. LOCATE EXPANSION JOINTS AT 30'-0" (MAXIMUM) ON CENTER. SEE DETAIL 2.
3. REINFORCING: WHERE 'D' IS 12" OR MORE, PROVIDE #4 LONG, T&B, AND #4 VERT @ 18"OC. WHERE 'D' IS 24"-48", PROVIDE #4 LONG. @ 12"OC

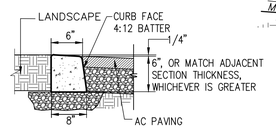

MOW CURB

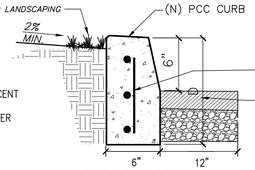

TYPE A1-6 (Modified)

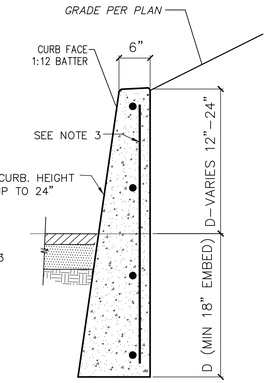

TYPE A1-Varies (Up to 24")

(N) PCC Curb Details 1 C6
N.T.S.

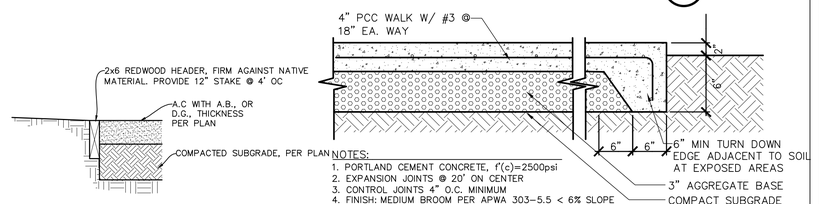

NOTES:
1. PORTLAND CEMENT CONCRETE, f'(c)=2500psi
2. EXPANSION JOINTS @ 20' ON CENTER
3. CONTROL JOINTS 4" O.C. MINIMUM
4. FINISH: MEDIUM BROOM PER APWA 303–5.5 < 6% SLOPE HEAVY BROOM PER APWA 303–5.5>6% SLOPE SEE ARCHITECT FOR COLORING AND SCORE PATTERNS/STAMPING

D.G. Surface 5 C3.0
N.T.S.

Concrete Pavement 4 C3.0
N.T.S.

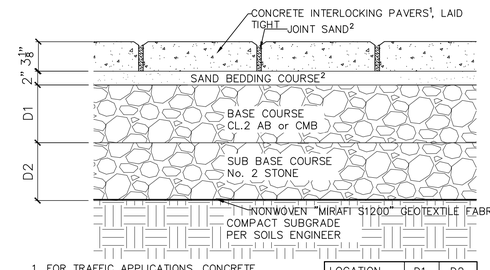

1. FOR TRAFFIC APPLICATIONS, CONCRETE INTERLOCKING PAVERS SHALL HAVE AN ASPECT RATIO (LENGTH/ THICKNESS) 3:1 OR LESS, LAID IN HERRINGBONE OR OTHER APPROVED PATTERN.
2. SAND BEDDING SHALL CONFORM TO ASTM C33. JOINT SAND SHALL CONFORM TO ASTM C144 or CSA A179.

LOCATION	D1	D2
FIRE LANE	6"	7"
PEDESTRIAN	8"	N/A

Paver Pavement 6 C3.0
N.T.S.

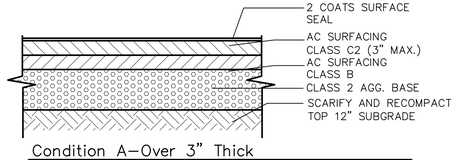

Condition A–Over 3" Thick

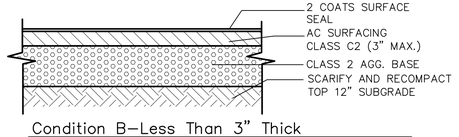

Condition B–Less Than 3" Thick

LOCATION	ASPHALT CONC.		AGGREGATE BASE			
	THICKNESS	CLASS	THICKNESS EX.	THICKNESS NEW	TYPE	GRADE
AUTOMOBILE PARKING	4"	2" CL.C2		4"	CMB	FINE
MAIN DRIVE AISLE	4"	2" CL.C2 2" CL.B		9"	CMB	FINE

Asphalt Concrete Pavement 7 C3.0
N.T.S.

Revisions | By

Bolton Engineering Corp.
Civil Engineering and Surveying
25834 Narbonne Avenue Suite 210
Lomita, Ca. 90717
Ph: 310-325-5580 Fax: 310-325-5581

CLIENT: CITY OF ROLLING HILLS & ROLLING HILLS COMMUNITY ASSOCIATION
2 PORTUGUESE BEND ROAD
ROLLING HILLS, CA 90274

TITLE: SITE SECTIONS & DETAILS
TENNIS COURT AREA IMPROVEMENTS
1 PORTUGUESE BEND ROAD
ROLLING HILLS, CA 90274

Date: Sept. 24,2023
Scale: AS SHOWN
Drawn: TMA
Checked: DJB
Job No. 8080_P1
Sheet
C3.0
Of 10 Sheets

WALL NOTES:

1. FOUNDATION: FORM AGAINST FIRM, UNDISTURBED NATIVE MATERIAL.
2. BACKDRAIN: 4" DIA PERFORATED PIPES, LAID AT 2% MINIMUM, PLACED WITH PERFORATIONS FACING DOWN AND SURROUNDED BY CRUSHED ROCK, WRAPPED WITH GEOFABRIC. DISCHARGE THROUGH FACE OF WALL OR OTHER APPROVED LOCATION.
3. WATERPROOFING: LAYER OF BITUMINOUS MATERIAL APPLIED OVER THE BACK OF THE WALL, COVERED BY AN IMPERVIOUS MEMBRANE COVERED BY FOAM BOARDS.
4. BACKFILL: BACKFILL TO BE CLEAN NATIVE MATERIAL. ALL IMPORT MATERIALS SHALL BE APPROVED BY INSPECTOR PRIOR TO USE. TESTING AT TWO-FOOT VERTICAL INTERVALS. COMPACTION OF NEW SOIL SHALL BE 95%.

REINFORCING NOTES:

- R1 PROVIDE #4 @ 12" IN FOOTING
- R2 #4 @ 18" OC HORIZONTAL BARS, MIN.
- R3 VERTICAL BARS: #4 @ 12" O.C. MIN

NOTE:

1. RETAINING WALL PER SEPARATE PERMIT
2. FOOTINGS SHALL BE EMBEDDED 12" MIN. INTO NATURAL SOIL AND/OR AT LEAST 24 INCHES BELOW ADJACENT GRADE.
3. RETAINING WALL DAMP PROOFING TO BE INSPECTED PRIOR TO PLACEMENT OF BACKFILL.

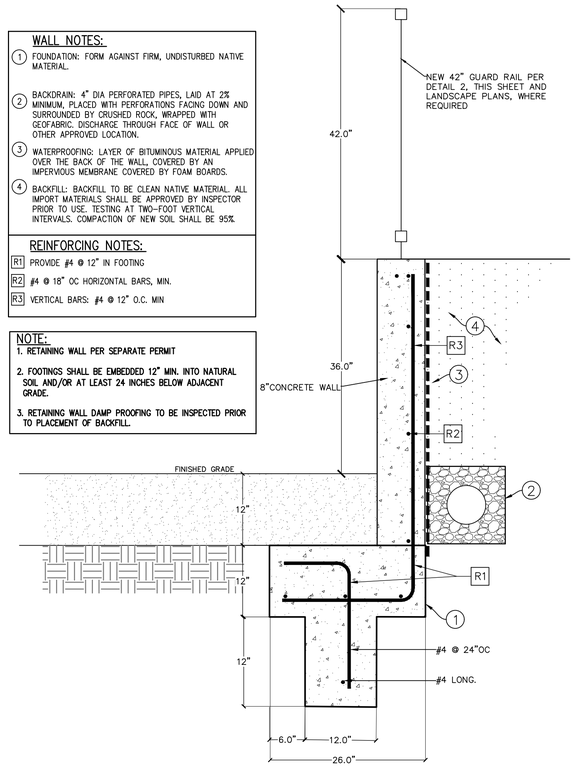

1 C3.1 RETAINING WALL DETAIL
N.T.S.

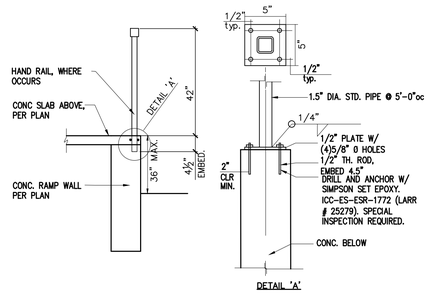

2 C3.1 HANDRAIL DETAIL
N.T.S.

BUILDING AND SAFETY DIVISION
Department of Public Works
DRAINAGE & GRADING APPROVED
UNDER LOS ANGELES COUNTY CODE
TITLE 26
anwong
PUBLIC WORKS
12/26/2023 11:41:52 AM

This set of plans and specifications must be kept at the job site at all times and it is unlawful to make any changes, modifications or alterations to these plans or specifications without the prior written permission of the Building Official. The stamping of this set of plans and specifications SHALL NOT, under any circumstances, be deemed to permit or to be an approval of any work or activity that violates any provisions of any County Ordinance or State Law

Revisions	By

Bolton Engineering Corp.
Civil Engineering and Surveying
25834 Narbonne Avenue Suite 210
Lomita, Ca. 90717
Ph: 310-325-5580 Fax: 310-325-5581

CLIENT: CITY OF ROLLING HILLS &
ROLLING HILLS COMMUNITY ASSOCIATION
2 PORTUGUESE BEND ROAD
ROLLING HILLS, CA 90274

TITLE: SITE SECTIONS & DETAILS
TENNIS COURT AREA IMPROVEMENTS
1 PORTUGUESE BEND ROAD
ROLLING HILLS, CA 90274

Date: Sept. 24,2023
Scale: AS SHOWN
Drawn: TMA
Checked: DJB
Job No. 8080_P1
Sheet
C3.1
Of 10 Sheets

J:\8080P.1_City Tennis Court Parcel\dwg\C-GRADING PLAN_Tennis Court_2020_h3 - Copy.dwg 9/26/2023 10:19:38 AM

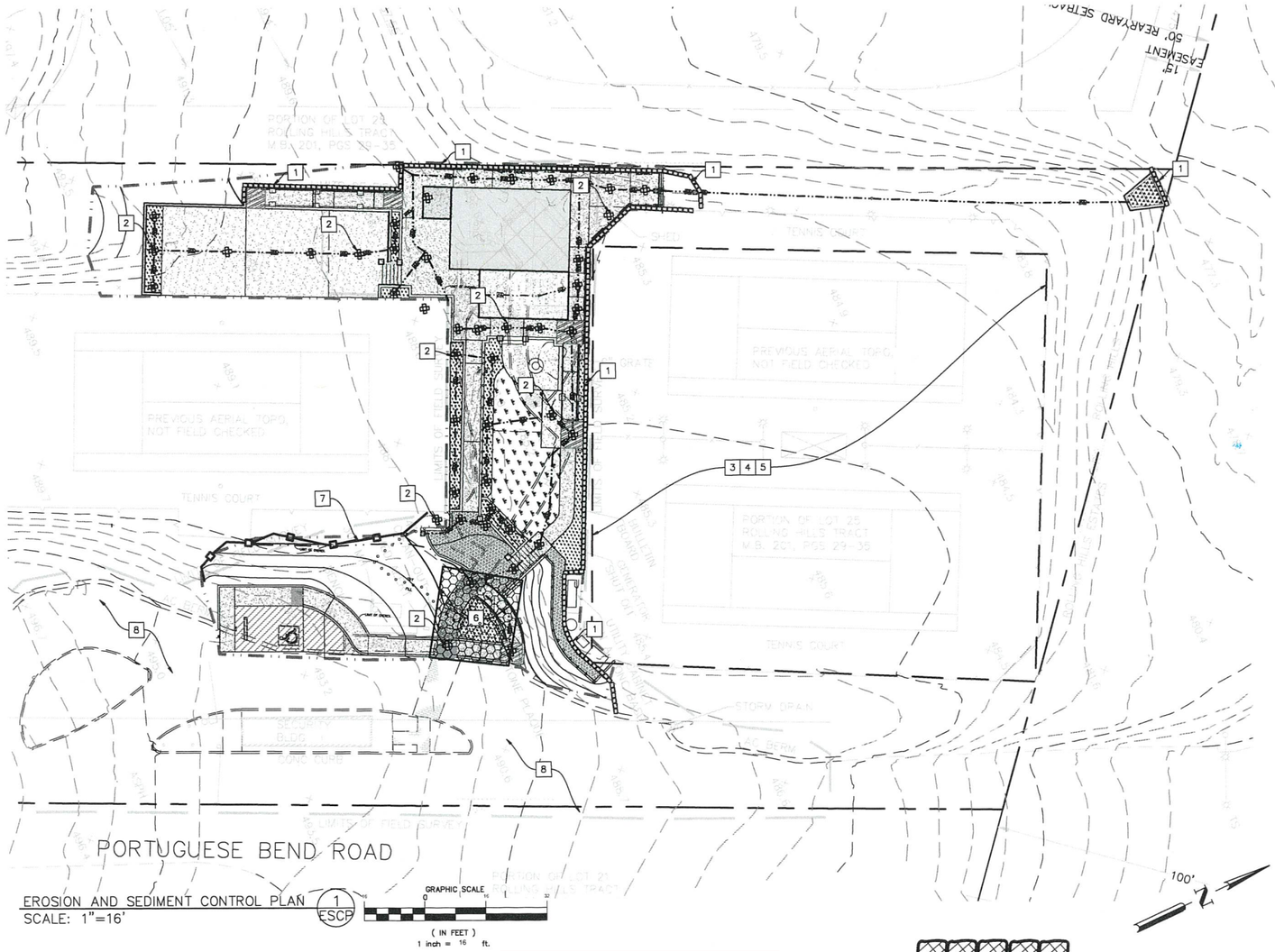

EROSION AND SEDIMENT CONTROL PLAN
SCALE: 1"=16'
1 ESCP

EROSION AND SEDIMENT CONTROL PLAN
APPROVED FOR DRAINAGE
STORM SEASON 2023
anwong
PUBLIC WORKS
12/26/2023 11:45:58 AM
BUILDING AND SAFETY DIVISION
LA COUNTY DEPARTMENT OF PUBLIC WORKS

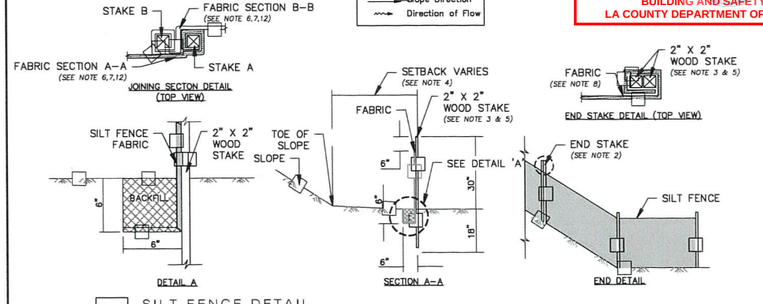

2 SILT FENCE DETAIL
SCALE: NOT TO SCALE



1 SANDBAG DETAIL
SCALE: NOT TO SCALE

CONSTRUCTION NOTES

1. PLACE 2 HIGH SANDBAG ALONG PERIMETER PER SE-8 AND DETAIL 1, THIS SHEET.
2. PLACE 3 HIGH GRAVEL BAG INLET/OUTLET SEDIMENT PROTECTION PER SE-10.
3. MATERIALS DELIVERY AND STORAGE AREA PER WM-1, 2, 3, AND 4.
4. WASTE COLLECTION AREA PER WM-5, 6, 7, 8, AND 9.
5. VEHICLE AND EQUIPMENT MAINTENANCE PER NS- 8, 9, AND 10
6. CONSTRUCTION ENTRANCE PER TC-1.
7. INSTALL SILT FENCE ALONG PERIMETER PER SE-1 AND DETAIL 2, THIS SHEET.
8. STREET SWEEPING PER SE-7.

ENTIRE SITE - APPLY WIND EROSION CONTROL MEASURES PER WE-1.

EROSION AND SEDIMENT CONTROL PLAN (ESCP) GENERAL NOTES:

1. IN CASE OF EMERGENCY, CALL CITY OF ROLLING HILLS AT 310-377-1521
2. TOTAL DISTURBED AREA 0.24 ACRES WDID# NOT REQUIRED
~~I. RISK LEVEL 1 2 3 (CIRCLE ONE AS DETERMINED BY STATE GENERAL PERMIT FOR SITES GREATER THAN 1 ACRE)~~
3. A STAND-BY CREW FOR EMERGENCY WORK SHALL BE AVAILABLE AT ALL TIMES DURING THE RAINY SEASON (NOVEMBER 1 TO APRIL 15). NECESSARY MATERIALS SHALL BE AVAILABLE ON-SITE AND STOCKPILED AT CONVENIENT LOCATIONS TO FACILITATE RAPID CONSTRUCTION OF EMERGENCY DEVICES WHEN RAIN IS IMMINENT.
4. EROSION CONTROL DEVICES SHOWN ON THIS PLAN MAY BE REMOVED WHEN APPROVED BY THE BUILDING OFFICIAL IF THE GRADING OPERATION HAS PROGRESSED TO THE POINT WHERE THEY ARE NO LONGER REQUIRED.
5. GRADED AREAS ADJACENT TO FILL SLOPES LOCATED AT THE SITE PERIMETER MUST DRAIN AWAY FROM THE TOP OF SLOPE AT THE CONCLUSION OF EACH WORKING DAY. ALL LOOSE SOILS AND DEBRIS THAT MAY CREATE A POTENTIAL HAZARD TO OFF-SITE PROPERTY SHALL BE STABILIZED OR REMOVED FROM THE SITE ON A DAILY BASIS.
6. ALL SILT AND DEBRIS SHALL BE REMOVED FROM ALL DEVICES WITHIN 24 HOURS AFTER EACH RAINSTORM AND BE DISPOSED OF PROPERLY.
7. A GUARD SHALL BE POSTED ON THE SITE WHENEVER THE DEPTH OF WATER IN ANY DEVICE EXCEEDS TWO FEET. THE DEVICE SHALL BE DRAINED OR PUMPED DRY WITHIN 24 HOURS AFTER EACH RAINSTORM. PUMPING AND DRAINING OF ALL BASINS AND DRAINAGE DEVISES MUST COMPLY WITH THE APPROPRIATE BMP FOR DE-WATERING OPERATIONS.
8. THE PLACEMENT OF ADDITIONAL DEVICES TO REDUCE EROSION DAMAGE AND CONTAIN POLLUTANTS WITHIN THE SITE IS LEFT TO THE DISCRETION OF THE FIELD ENGINEER. ADDITIONAL DEVICES AS NEEDED SHALL BE INSTALLED TO RETAIN SEDIMENTS AND OTHER POLLUTANTS ON SITE.
9. DE-SILTING BASINS MAY NOT BE REMOVED OR MADE INOPERABLE BETWEEN NOVEMBER 1 AND APRIL 15 OF THE FOLLOWING YEAR WITHOUT THE APPROVAL OF THE BUILDING OFFICIAL.
10. STORM WATER POLLUTION AND EROSION CONTROL DEVICES ARE TO BE MODIFIED, AS NEEDED, AS THE PROJECT PROGRESSES, THE DESIGN ADN THE PLACEMENT OF THESE DEVICES IS THE RESPONSIBILITY OF THE FIELD ENGINEER. PLANS REPRESENTING CHANGES MUST BE SUBMITTED FOR APPROVAL IF REQUESTED BY THE BUILDING OFFICIAL.
11. EVERY EFFORT SHOULD BE MADE TO ELIMINATE THE DISCHARGE OF NON-STORM WATER FROM THE PROJECT SITE AT ALL TIMES.
12. ERODED SEDIMENTS AND OTHER POLLUTANTS MUST BE RETAINED ON-SITE AND MAY NO BE TRANSPORTED FROM THE SITE VIA SHEET FLOW, SWALES, AREA DRAINS NATURAL DRAINAGE COURSES OR WND.
13. STOCKPILES OF EARTH AND OTHER CONSTRUCTION-ORELATED MATERIALS MUST BE PROTECTED FROM BEING TRANSPORTED FROM THE SITE BY THE FORCES OF WND OR WATER.
14. FUELS, OILS, SOLVENTS AND OTHER TOXIC MATERIALS MUST BE STORED IN ACCORDANCE WITH THEIR LISTING AND ARE NOT TO CONTAMINATE THE SOILS AND SURFACE WATERS. ALL APPROVED STORAGE CONTAINERS ARE TO BE PROTECTED FROM THE WEATHER. SPOOLS MUST BE CLEANED UP IMMEDIATELY AND DISPOSED OF IN A PROPER MANNER. SPILLS MAY NOT BE WASHED INTO THE DRAINAGE SYSTEM.
15. EXCESS OR WASTE CONCRETE MAY NOT BE WASHED INTO THE PUBLIC WAY OR ANY OTHER DRAINAGE SYSTEM. PROVISIONS SHALL BE MADE TO RETAIN CONCRETE WASTES ON-SITE UNTIL THEY CAN BE DISPOSED OF AS SOLID WASTE.
16. DEVELOPERS/ CONTRACTORS ARE RESPONSIBLE TO INSPECT ALL EROSION CONTROL DEVICES AND BMPS ARE INSTALLED AND FUNCTIONING PROPERLY IF THERE IS A 50% OR GREATER PROBABILITY OF PREDICTED PRECIPITATION, AND AFTER ACTUAL PRECIPITATION. A CONSTRUCTION SITE INSPECTION CHECKLIST AND INSPECTION LOG SHALL BE MAINTAINED AT THE PROJECT SITE AT ALL TIMES AND AVAILABLE FOR REVIEW BY THE BUILDING OFFICIAL (COPIES OF THE SELF-INSPECTION CHECKLIST AND INSPECTION LOGS ARE AVAILABLE UPON REQUEST.
17. TRASH AND CONSTRUCTION-RETLATED SOLID WASTES MUST BE DEPOSITED INTO A COVERED RECEPTACLE TO PREVENT CONTAMINATION OF RAINWATER AND DISPERSAL BY WND.
18. SEDIMENTS AND OTHER MATERIALS MAY NOT BE TRACKED FROM THE SITE BY VEHICLE TRAFFIC. THE CONSTRUCTION ENTRANCE ROADWAYS MUST BE STABILIZED SO AS TO INHIBIT SEDIMENTS FROM BEING DEPOSITED INTO THE PUBLIC WAY. ACCIDENTAL DEPOSITIONS MUST BE SWEPT UP IMMEDIATELY AND MAY NOT BE WASHED DOWN BY RAIN OR OTHER MEANS.
19. ANY SLOPES WITH DISTURBED SOILS OR DENUDED OF VEGETATION MUST BE STABILIZED SO AS TO INHIBIT EROSION BY WND OR WATER.
20. AS THE ENGINEER/ QSD OF RECORD, I HAVE SELECTED APPROPRIATE BMPS TO EFFECTIVELY MINIMIZE THE NEGATIVE IMPACTS OF THIS PROJECT'S CONSTRUCTION ACTIVITIES ON STORM WATER QUALITY. THE PROJECT OWNER AND CONTRACT ARE AWARE THAT THE SELECTED BMPS MUST BE INSTALLED, MONITORED, AND MAINTAINED TO ENSURE THEIR EFFECTIVENESS.

CIVIL ENGINEER / ~~QSD SIGNATURE~~ — 8-24-23 DATE

21. THE FOLLOWNG NOTES MUST BE ON THE PLAN:

AS THE PROJECT OWNER OR AUTHORIZED AGENT OR THE OWNER, "I CERTIFY THAT THIS DOCUMENT AND ALL ATTACHMENTS WERE PREPARED UNDER MY DIRECTION OR SUPERVISION IN ACCORDANCE WITH THE SYSTEM DESIGNED TO ENSURE THAT A QUALIFIED PERSONNEL PROPERLY GATHER AND EVALUATE THE INFORMATION SUBMITTED. BASED ON MY INQUIRY OF THE PERSON OR PERSONS WHO MANAGE THE SYSTEM OR THOSE PERSONS DIRECTLY RESPONSIBLE FOR GATHERING THE INFORMATION, TO THE BEST OF MY KNOWLEDGE AND BELIEF, THE INFORMATION SUBMITTED IS TRUE, ACCURATE, AND COMPLETE. I AM AWARE THAT BY SUBMITTING FALSE AND/OR INACCURATE INFORMATION, FAILING TO UPDATE THE ESCP TO REFLECT CURRENT CONDITIONS, OR FAILING TO PROPERLY AND/OR ADEQUATELY IMPLEMENT THE ESCP MAY RESULT IN REVOCATION OF GRADING AND/OR OTHER PERMITS AND OTHER SANCTIONS PROVIDED BY LAW."

OWNER OR AUTHORIZED REPRESENTATIVE (PERMITTEE) — 12/14/2023 DATE

22. DEVELOPERS/CONTRACTORS ARE RESPONSIBLE TO INSPECT ALL EROSION CONTROL DEVICES AND BMPS AREA INSTALLED AND FUNCTION PROPERLY AS REQUIRED BY THE STATE CONSTRUCTION GENERAL PERMIT. A CONSTRUCTION SITE INSPECTION CHECKLIST AND INSPECTION LOG SHALL BE MAINTAINED AT THE PROJECT SITE AT ALL TIMES AND AVAILABLE FOR REVIEW BY THE BUILDING OFFICIAL.

EROSION CONTROL
- EC1 SCHEDULING
- EC2 PRESERVATION OF EXISTING VEGETATION
- EC3 HYDRAULIC MULCH
- EC4 HYDROSEEDING
- EC5 SOIL BINDERS
- EC6 STRAW MULCH
- EC7 GEOTEXTILES AND MATS
- EC8 WOOD MULCHING
- EC9 EARTH DIKES AND DRAINAGE SYSTEMS
- EC10 VELOCITY DISSIPATION DEVICES
- EC11 SLOPE DRAINS
- EC12 STREAMBANK STABILIZATION
- EC13 RESERVED
- EC14 COMPOST BLANKETS
- EC15 SOIL PRESERVATION/ROUGHENING
- EC16 NON-VEGETATED STABILIZATION

TEMPORARY SEDIMENT CONTROL
- SE1 SILT FENCE
- SE2 SEDIMENT BASIN
- SE3 SEDIMENT TRAP
- SE4 CHECK DAM
- SE5 FIBER ROLLS
- SE6 GRAVEL BAG BERM
- SE7 STREET SWEEPING AND VACUUMING
- SE8 SANDBAG BARRIER
- SE9 STRAW BALE BARRIER
- SE10 STORM DRAIN INLET PROTECTION
- SE11 ACTIVE TREATMENT SYSTEMS
- SE12 TEMPORARY SILT DIKE
- SE13 COMPOST SOCKS & BERMS
- SE14 BIOFILTER BAGS

WIND EROSION CONTROL
- WE1 WIND EROSION CONTROL

NON-STORMWATER MANAGEMENT
- NS1 WATER CONSERVATION PRACTICES
- NS2 DE-WATERING OPERATIONS
- NS3 PAVING AND GRINDING OPERATIONS
- NS4 TEMPORARY STREAM CROSSING
- NS5 CLEAN WATER DIVERSION
- NS6 ILLICIT CONNECTION/DISCHARGE
- NS7 POTABLE WATER/IRRIGATION
- NS8 VEHICLE AND EQUIPMENT CLEANING
- NS9 VEHICLE AND EQUIPMENT FUELING
- NS10 VEHICLE AND EQUIPMENT MAINTENANCE
- NS11 PILE DRIVING OPERATIONS
- NS12 CONCRETE CURING
- NS13 CONCRETE FINISHING
- NS14 MATERIAL AND EQUIPMENT USE
- NS15 DEMOLITION ADJACENT TO WATER
- NS16 TEMPORARY BATCH PLANTS

WASTE MANAGEMENT AND MATERIAL POLLUTION CONTROL
- WM1 MATERIAL DELIVERY AND STORAGE
- WM2 MATERIAL USE
- WM3 STOCKPILE MANAGEMENT
- WM4 SPILL PREVENTION AND CONTROL
- WM5 SOLID WASTE MANAGEMENT
- WM6 HAZARDOUS WASTE MANAGEMENT
- WM7 CONTAMINATION SOIL MANAGEMENT
- WM8 CONCRETE WASTE MANAGEMENT
- WM9 SANITARY SEPTIC WASTE MANAGEMENT
- WM10 LIQUID WASTE MANAGEMENT

EQUIPMENT TRACKING CONTROL
- TC1 STABILIZED CONSTRUCTION ENTRANCE EXIT
- TC2 STABILIZED CONSTRUCTION ROADWAY
- TC3 ENTRANCE/OUTLET TIRE WASH

ADDITIONAL INFORMATION:
GRADING PLAN CHECK NUMBER: BLD2008010082
CONTRACTOR CONTACT INFORMATION:
COMPANY NAME:
CONTACT PERSON:
CONTACT PHONE NUMBER:

Revisions	By

Bolton Engineering Corp.
Civil Engineering and Surveying
25834 Narbonne Avenue Suite 210
Lomita, Ca. 90717
Ph: 310-325-5580 Fax: 310-325-5581

CLIENT: CITY OF ROLLING HILLS &
ROLLING HILLS COMMUNITY ASSOCIATION
2 PORTUGUESE BEND ROAD
ROLLING HILLS, CA 90274

TITLE: EROSION AND SEDIMENT CONTROL PLAN
TENNIS COURT AREA IMPROVEMENTS
1 PORTUGUESE BEND ROAD
ROLLING HILLS, CA 90274

Date: Dec 6, 2023
Scale: AS SHOWN
Drawn: TMA
Checked: DJB
Job No. 8080_P1
Sheet
ESCP
Of 10 Sheets

Hydrology: Watershed O1 (Off-site)			
Area (Acres):	0.053305785		
Impervious (%):	0		
Storm Type:	25 Year		
T_C (min):	5 Min	I (in/hr):	2.72
C_U:	0.8568	C_D:	0.8573
Q_{O1} (cfs):	0.12		
Control Method:	(E) 24" Swale at top of slope connected to underground system		

Hydraulics: Watershed O1 (Off-site)	
Proposed Control:	Sheet flow onto property
Number of Units:	n/a
Flow Rate Per Unit (gpm):	n/a
Q_{Drains}=	n/a
Check $Q_{Drains} > Q_{O1}$:	PASS

Hydrology: Watershed A			
Area (Acres):	0.073025712		
Impervious (%):	0		
Storm Type:	25 Year		
T_C (min):	5 Min	I (in/hr):	2.724
C_U:	0.8568	C_D:	0.8573
Q_A (cfs):	0.17		
Control Method:	Area drains are connected to underground drainage system		

Hydraulics: Watershed A	
Proposed Control:	12" Concrete Swale
Number of Units:	1 @ 2% Slope: n=0.013
Flow Rate Per Unit (cfs):	0.900
Q_{Drains}=	0.900
Check $Q_{Drains} > Q_{O1} + Q_A$:	0.29

Hydrology: Watershed N			
Area (Acres):	0.015151515		
Impervious (%):	1		
Storm Type:	25 Year		
T_C (min):	5 Min	I (in/hr):	2.724
C_U:	0.8568	C_D:	0.8573
Q_{11} (cfs):	0.04		
Control Method:	Runoff collected in (E) 12" Swale at slope bench and is connected to underground system		

Hydrology: Watershed B			
Area (Acres):	0.03328742		
Impervious (%):	0.0		
Storm Type:	25 Year		
T_C (min):	5 Min	I (in/hr):	2.724
C_U:	0.8568	C_D:	0.8573
Q_B (cfs):	0.08		
Control Method:	Area drains		

Hydraulics: Watershed M	
Proposed Control:	Sheet flow to planter 12" Square NDS Area Drain
Number of Units:	3
Flow Rate Per Unit (gpm):	155
Flow Rate Per Unit (cfs):	0.3460
Q_{Drains}=	1.038
Check $Q_{Drains} > Q_H + Q_{O2} + Q_L$:	PASS

Hydraulics: Watershed B	
Proposed Control:	4" Round NDS Area Drain: Brass
Number of Units:	3
Flow Rate Per Unit (gpm):	16
Flow Rate Per Unit (cfs):	0.0357
Q_{Drains}=	0.107
Check $Q_{Drains} > Q_B$:	PASS

Hydrology: Rip Rap	
Flow Rate In (cfs):	1.55
(All Watersheds)	

Hydraulics: Rip Rap	
Pipe Size In (ft):	0.67
Upstream Width (ft)	2.00
Length of Rip Rap (ft)	8.35
Downstream Width (ft)	8.0
Incoming Velocity (ft/s)	6.87
Rock Size D50 (in):	8
Outgoing Velocity (ft/s)	1.5
Check: Velocity < 3 ft/3)	OK

Hydrology: Watershed C			
Area (Acres):	0.02020202		
Impervious (%):	0.909090909		
Storm Type:	25 Year		
T_C (min):	5 Min	I (in/hr):	2.724
C_U:	0.8568	C_D:	0.8961
Q_B (cfs):	0.05		
Control Method:	Downspouts connected to underground system		

Hydraulics: Watershed C	
Proposed Control:	4" NDS round Area Drain: Brass
Number of Units:	4
Flow Rate Per Unit (gpm):	16
Flow Rate Per Unit (cfs):	0.0357
Q_{Drains}=	0.143
Check $Q_{Drains} > Q_U$:	PASS

Hydrology: Watershed D			
Area (Acres):	0.0021809		
Impervious (%):	100		
Storm Type:	50 Year		
T_C (min):	5 Min	I (in/hr):	2.724
C_U:	0.8568	C_D:	0.9
Q_E (cfs):	0.01		
Control Method:	Runoff collected in area drains are connected to underground drainage system		

Hydraulics: Watershed D	
Proposed Control:	Microchannel Drain
Number of Units:	30
Flow Rate Per Unit (gpm):	3
Flow Rate Per Unit (cfs):	0.0067
Q_{Drains}=	0.201
Check $Q_{Drains} > Q_U$:	PASS

Hydrology: Watershed F			
Area (Acres):	0.006887052		
Impervious (%):	100		
Storm Type:	50 Year		
T_C (min):	5 Min	I (in/hr):	2.724
C_U:	0.8568	C_D:	0.9
Q_{11} (cfs):	0.02		
Control Method:	Runoff collected in (E) 12" Swale at slope bench and is connected to underground system		

Hydraulics: Watershed F	
Proposed Control:	4" NDS round Area Drain: Brass
Number of Units:	3
Flow Rate Per Unit (gpm):	16
Flow Rate Per Unit (cfs):	0.0357
Q_{Drains}=	0.107
Check $Q_{Drains} > Q_H$:	PASS

Hydrology: Watershed E			
Area (Acres):	0.015495868		
Impervious (%):	100		
Storm Type:	25 Year		
T_C (min):	5 Min	I (in/hr):	2.724
C_U:	0.8844	C_D:	0.9
Q_E (cfs):	0.04		
Control Method:	Runoff collected in area drains are connected to underground drainage system		

Hydraulics: Watershed E	
Proposed Control:	Connect downspout to underground system

Hydrology: Watershed G			
Area (Acres):	0.014921947		
Impervious (%):	100		
Storm Type:	25 Year		
T_C (min):	5 Min	I (in/hr):	2.724
C_U:	0.8568	C_D:	0.9
Q_E (cfs):	0.04		
Control Method:	Runoff collected in area drains are connected to underground drainage system		

Hydraulics: Watershed G	
Proposed Control:	4" Round NDS Area Drain: Brass
Number of Units:	7
Flow Rate Per Unit (gpm):	16
Flow Rate Per Unit (cfs):	0.0357
Q_{Drains}=	0.250
Check $Q_{Drains} > Q_U$:	PASS

Hydrology: Watershed H			
Area (Acres):	0.03030303		
Impervious (%):	0.181818182		
Storm Type:	25 Year		
T_C (min):	5 Min	I (in/hr):	2.724
C_U:	0.8568	C_D:	0.8646
Q_D (cfs):	0.07		
Control Method:	Runoff collected in area drains are connected to underground drainage system		

Hydraulics: Watershed H	
Proposed Control:	4" Round NDS Area Drain: Brass
Number of Units:	3
Flow Rate Per Unit (gpm):	52
Flow Rate Per Unit (cfs):	0.1161
Q_{Drains}=	0.348
Check $Q_{Drains} > Q_H + Q_{O2}$:	PASS

Hydrology: Watershed I			
Area (Acres):	0.009182736		
Impervious (%):	0.65		
Storm Type:	25 Year		
T_C (min):	5 Min	I (in/hr):	2.724
C_U:	0.8568	C_D:	0.8849
Q_B (cfs):	0.02		
Control Method:	Runoff collected in area drains are connected to underground drainage system		

Hydraulics: Watershed I	
Proposed Control:	4" Round NDS Area Drain: Brass
Number of Units:	1
Flow Rate Per Unit (gpm):	16
Flow Rate Per Unit (cfs):	0.0357
Q_{Drains}=	0.036
Check $Q_{Drains} > Q_U$:	PASS

Hydrology: Watershed J			
Area (Acres):	0.038131313		
Impervious (%):	0.371462974		
Storm Type:	25 Year		
T_C (min):	5 Min	I (in/hr):	2.724
C_U:	0.8568	C_D:	0.8729
Q_D (cfs):	0.09		
Control Method:	Area Drains		

Hydraulics: Watershed J	
Proposed Control:	4" Round NDS Area Drain: Brass
Number of Units:	4
Flow Rate Per Unit (gpm):	16
Flow Rate Per Unit (cfs):	0.0357
Q_{Drains}=	0.143
Check $Q_{Drains} > Q_U$:	PASS

Hydrology: Watershed O2 (Off-site)			
Area (Acres):	0.035261708		
Impervious (%):	0		
Storm Type:	25 Year		
T_C (min):	5 Min	I (in/hr):	2.724
C_U:	0.8568	C_D:	0.8573
Q_{O2} (cfs):	0.08		
Control Method:	(E) 24" Swale at top of slope connected to underground system		

Hydraulics: Watershed O2(Off-site)	
Proposed Control:	Sheet flow onto property
Number of Units:	n/a
Flow Rate Per Unit (gpm):	n/a
Q_{Drains}=	n/a
Check $Q_{Drains} > Q_{O1}$:	PASS

Hydrology: Watershed L			
Area (Acres):	0.066574839		
Impervious (%):	0		
Storm Type:	25 Year		
T_C (min):	5 Min	I (in/hr):	2.724
C_U:	0.8568	C_D:	0.8573
Q_{11} (cfs):	0.16		
Control Method:	Runoff collected in (E) 12" Swale at slope bench and is connected to underground		

Hydraulics: Watershed L	
Proposed Control:	Run on to tennis court sheet flow

Hydrology: Watershed K			
Area (Acres):	0.016069789		
Impervious (%):	0.857142857		
Storm Type:	25 Year		
T_C (min):	5 Min	I (in/hr):	2.724
C_U:	0.8568	C_D:	0.8938
Q_{10} (cfs):	0.04		
Control Method:	Driveway runoff is not collected and discharges onto Poppy Trail		

Hydraulics: Watershed K	
Proposed Control:	4" Round NDS Area Drain: Brass
Number of Units:	3
Flow Rate Per Unit (gpm):	16
Flow Rate Per Unit (cfs):	0.0357
Q_{Drains}=	0.107
Check $Q_{Drains} > Q_L$:	PASS

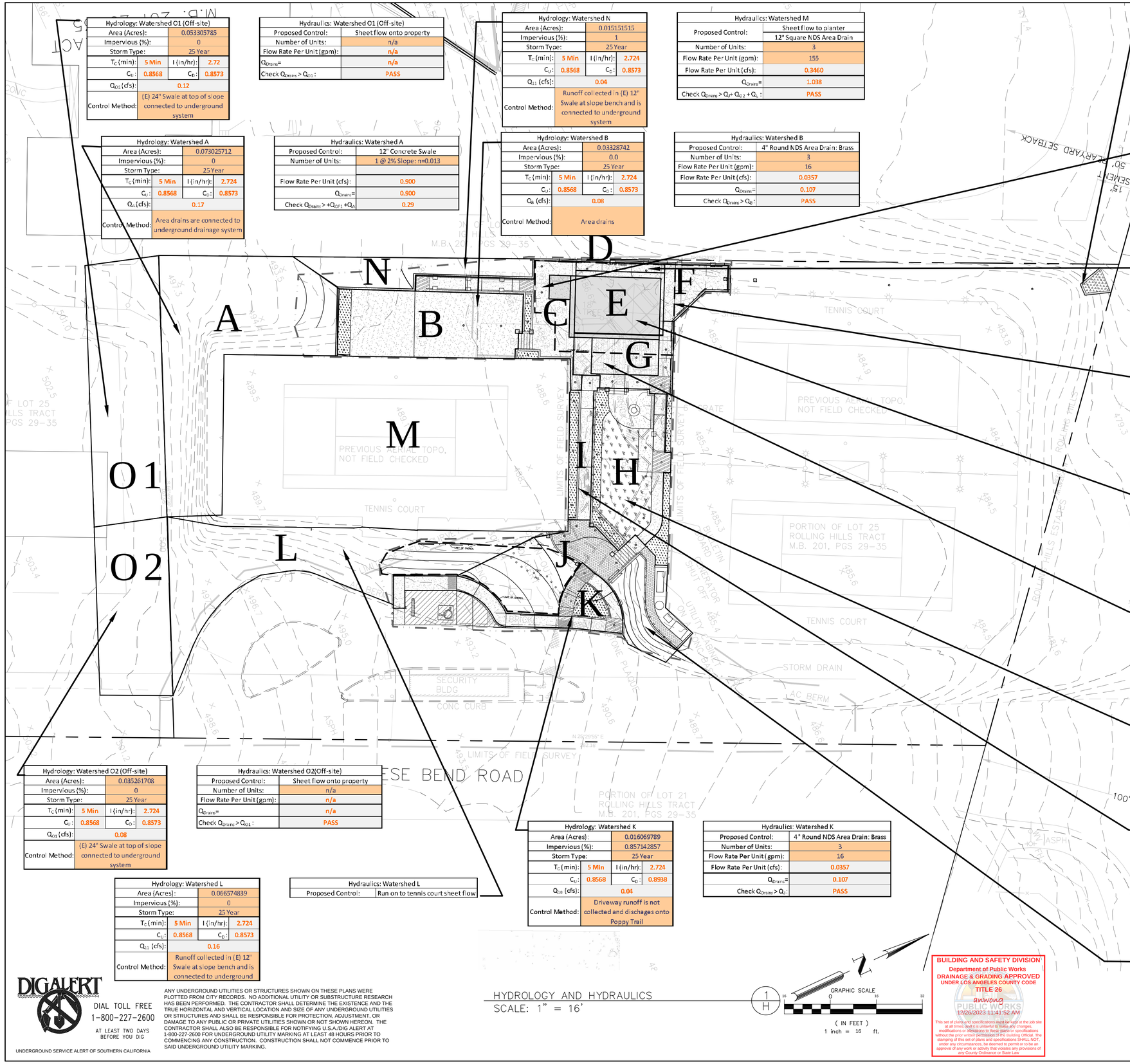

HYDROLOGY AND HYDRAULICS
SCALE: 1" = 16'

1 H

GRAPHIC SCALE
0 16 32
(IN FEET)
1 inch = 16 ft.

DIGALERT
DIAL TOLL FREE
1-800-227-2600
AT LEAST TWO DAYS BEFORE YOU DIG
UNDERGROUND SERVICE ALERT OF SOUTHERN CALIFORNIA

ANY UNDERGROUND UTILITIES OR STRUCTURES SHOWN ON THESE PLANS WERE PLOTTED FROM CITY RECORDS. NO ADDITIONAL UTILITY OR SUBSTRUCTURE RESEARCH HAS BEEN PERFORMED. THE CONTRACTOR SHALL DETERMINE THE EXISTENCE AND THE TRUE HORIZONTAL AND VERTICAL LOCATION AND SIZE OF ANY UNDERGROUND UTILITIES OR STRUCTURES AND SHALL BE RESPONSIBLE FOR PROTECTION, ADJUSTMENT, OR DAMAGE TO ANY PUBLIC OR PRIVATE UTILITIES SHOWN OR NOT SHOWN HEREON. THE CONTRACTOR SHALL ALSO BE RESPONSIBLE FOR NOTIFYING U.S.A./DIG ALERT AT 1-800-227-2600 FOR UNDERGROUND UTILITY MARKING AT LEAST 48 HOURS PRIOR TO COMMENCING ANY CONSTRUCTION. CONSTRUCTION SHALL NOT COMMENCE PRIOR TO SAID UNDERGROUND UTILITY MARKING.

BUILDING AND SAFETY DIVISION
Department of Public Works
DRAINAGE & GRADING APPROVED
UNDER LOS ANGELES COUNTY CODE
TITLE 26
awong
PUBLIC WORKS
12/26/2023 11:41:52 AM
This set of plans and specifications must be kept at the job site at all times. It is unlawful to make any changes, modifications or alterations to these plans or specifications without the prior written permission of the Building Official. The stamping of this set of plans and specifications SHALL NOT, under any circumstances, be deemed to permit or to be an approval of any work or activity that violates any provisions of any County Ordinance or State Law

Revisions	By

Bolton Engineering Corp.
Civil Engineering and Surveying
25834 Narbonne Avenue Suite 210
Lomita, Ca. 90717
Ph: 310-325-5580 Fax: 310-325-5581

CLIENT: CITY OF ROLLING HILLS & ROLLING HILLS COMMUNITY ASSOCIATION
2 PORTUGUESE BEND ROAD
ROLLING HILLS, CA 90274

TITLE: HYDROLOGY AND HYDRAULICS
TENNIS COURT AREA IMPROVEMENTS
1 PORTUGUESE BEND ROAD
ROLLING HILLS, CA 90274

Date: Sept. 24,2023
Scale: AS SHOWN
Drawn: TMA
Checked: DJB
Job No. 8080_P1
Sheet H
Of 10 Sheets

J:\8080P.1_City Tennis Court Parcel\dwg\C-GRADING PLAN_Tennis Court_2020_h3 - Copy.dwg 9/26/2023 10:19:43 AM

Attachment B

GENERAL NOTES

1. Building and structures and all work shall be engineered in accordance with the 2017 County of Los Angeles Building Code including all local ordinances and requirements. The contract structural drawings represent the finished structure. They do not indicate the method of construction.
2. It shall be the responsibility of the contractor to provide for the proper design and installation of all required shoring, bracing, and formwork. The methods, techniques, sequence, procedures, supervision, and installation of all shoring and bracing shall be per the most recent OSHA standards. All shoring, bracing, and formwork shall remain in place until all work has been suitably completed.
3. Bolton Engineering Corporation (BEC) is the engineer of record. All dimensions, elevations, and existing improvements shall be verified and discrepancies reported to BEC's offices at 310-325-5580.
4. The information shown has been compiled from sources of varying reliability. The contractor is cautioned that only excavation, demolition, potholing, or selective construction inspection will reveal the exact locations, elevations, and extents of existing improvements shown.
5. Dimensions shall take precedence over scales on drawings. Notes and details on drawings shall take precedence over general notes and typical details. Where no construction details are noted, details shall be the same as for any other similar work.
6. It shall be the responsibility of the contractor to provide supervision of the construction work to ensure that it is built in conformance with the approved plans and specifications.
7. The approved plans and specifications, including revisions, shall be kept on the construction site at all times.
8. Construction materials shall be spread out if placed on framed floors or roofs. In no event shall loads exceed the design loadings for the supporting members.
9. No changes in the plans shall be made and no extra work performed unless so approved by the architect, civil/structural engineer, soils/geological engineer, county/city inspector and building official.
10. It is the intent of the drawings and specifications to require the completion of the work in a thorough and workmanlike manner in every respect.
11. The contractor shall promptly remove from the building, lot, sidewalks, and streets all rubbish and debris as it accumulates, due to the work done under contract. All combustible debris shall be removed from the building on a daily basis.
12. The contractor shall obtain or otherwise furnish permits, licenses, fees, materials, labor, tools, supplies, equipment, transportation, superintendence, temporary construction of every nature, insurance, taxes and all other services and facilities necessary to complete this project.
13. The contractor shall at all times maintain full and unlimited worker's compensation insurance in accordance with the labor code in the state of California, and shall carry public contingent liability of insurance, in an amount satisfactory to and in companies selected with the consent of the owner.
14. Excavations shall be per the requirements of the State Construction Safety Orders as enforced by the State Division of Industrial Safety.
15. Submit copies of permits, licenses, certifications, inspection reports, releases, jurisdictional settlements, notices, receipts for fee payments, judgments and similar documents, correspondence for the owner's records.
16. Every item mentioned in the specifications is the intended minimum quality of material that will be demanded. Should the contractor wish to suggest any substitute considered equal in value and efficiency with the one specified, it shall be stated what the item suggested is and the difference in cost, if any.

CONCRETE NOTES

1. All phases of work pertaining to the construction shall conform to the building code requirements for reinforced concrete (ACI 318, latest approved edition) with modification as noted on the drawings.
2. All concrete has been designed for 2,500 psi minimum compressive strength at 28 days. Specific minimums are as follows:

	Concrete Strengths f'c
Slabs on Grade	2,500 psi
Footings	2,500 psi
Wall Stems	2,500 psi
Concrete Beams	None
Caissons	None

3. Continuous inspection by a city approved deputy inspector shall be required for pouring concrete exceeding 2,500 psi.
4. Not used
5. All structural concrete shall be made from aggregates based on weight classification as shown below:
   Normal Weight: ASTM C33 with proven shrinkage characteristics of less than 0.05%
6. Concrete mix designs shall be prepared by an independent laboratory and reviewed by the engineer.
7. Admixtures shall comply with ASTM C494 and be of a type that increases the workability of the concrete, but shall not be considered to reduce the specified minimum cement content (calcium chloride shall not be used). Any water reducing agents added shall be used to reduce water/cement ratio.
8. Clear coverage over reinforcing bars, anchor bolts and all other concrete inserts, unless noted otherwise, shall be as follows:

Concrete against earth	3" Clear
Slab on grade construction	Centered in slab
Formed concrete	2" Clear

9. Provide sleeves for plumbing and electrical openings in concrete before placing. Do not cut any reinforcing which may conflict. Coring in concrete is not permitted, except where shown. Notify BEC in advance of conditions not shown on the structural drawings.
10. Dry pack under base plates, sill plates and where otherwise noted on drawings shall consist of 1 part Portland cement and 2.5 parts fine aggregate conforming to ASTM C33, with enough water to form a ball when squeezed by hand. The space between two surfaces requiring dry pack shall be packed with the dry pack material, by tamping or ramming with a bar or rod, until the voids are completely filled.
11. Non shrink grout shall be a ready to use metallic aggregate project requiring only the addition of water at the job site, and shall have the following attributes:
1. Be capable of producing a flowable grouting material having no drying shrinkage or settlement at any time.
2. The compressive strength of the grout shall be not less than 5,000 psi at seven days, and 7,500 psi at 28 days.
3. Grout shall be Embeco 636 produced by Master Builders (Available from Compton Sales Office: 310-886-1000), or other listed makes approved by the building official.
12. For slabs on grade, locate the unindicated construction joints in a manner to divide the slab into areas not in excess of 600 square feet, with one dimension being not greater than 1.2 times the other. Place perpendicular to the main frame reinforcement, and continue reinforcement across joint. Provide isolation joints in slabs on grade and vertical surfaces.

FOUNDATION NOTES

1. The foundation design is based on the recommendations of the 2016 CBC SECTION 1807A AND LA COUNTY RCM R404.4A1 DESIGN OF RETAINING WALLS
   Passive Bearing Pressure = 1,500 psf
   Allowable Passive Pressure:= 100 psf
   Active Pressure= 45 psf/ft (Level Backfill)
2. Unless otherwise indicated, foundation works shall be performed in accordance with the above soils report and requirements of the soils engineer and project geologist.
3. Foundation and caissons excavations must be inspected and approved by the **Field Engineer** prior to the placing of steel or concrete.
4. Unexpected soil conditions: Any subsurface conditions not in accordance with the conditions described in this report shall be reported to the soils engineer immediately for resolution prior to continuing any work.
5. Compaction: Material for filling and backfilling shall consist of the excavated material and/or imported borrow and shall be free of organic matter, trash, lumber or other debris. Compact in accordance with above referenced report. Earth shall be compacted under all slabs and around all footings.
6. Form footings as necessary. Bottom of footing shall be stepped if necessary to provide level bearing. Foundation excavations shall be cleaned of any loosened soils and standing water before placing steel or concrete.

CITY OF ROLLING HILLS
Approved by:
PLANNING DEPARTMENT
Date: 9/27/23
ZC 23-071
Site retaining walls

REINFORCING STEEL NOTES

1. All reinforcing steel shall conform to ASTM A615 grade 60 U.N.O. except reinforcing to be welded shall conform to ASTM A706.
2. All concrete shall be reinforced unless specifically noted "Not Reinforced" in the drawings. If reinforcing bars are not shown or noted, provide same reinforcement as for similar conditions elsewhere in the work, or as directed by the architect/engineer.
3. Reinforcement bars #5 and larger shall not be spliced except as detailed and located on drawings. #4 and smaller bars with length not shown shall be continuous, lapping in concrete 1'-6" minimum. Wall horizontal reinforcement splices shall be staggered, vertical reinforcement shall be spliced only at horizontal supports, such as roof or floor unless otherwise noted on drawings. All splices shall be Class B unless noted otherwise.
4. Anchor bolts, dowels and other embedded items shall be accurately set in place before concrete is poured.
5. Reinforcement bars shall be accurately placed and firmly supported using ties and support bars in addition to reinforcement shown where firm and accurate placing is necessary as specified in the ACI Standards. Dowels should be provided to match all reinforcement at construction joints unless otherwise noted.
6. No reinforcement welding shall be done unless shown on the drawings, or approved by the engineer (tack welding included).
7. All dimensions shown for location of reinforcing are to the face of bars and denote clear coverage unless otherwise noted.
8. Minimum concrete coverage of reinforcing steel shall be as follows, unless otherwise noted on plans:

   Concrete cast against ground: . . . . 3"
   Formed concrete but exposed to earth or weather: . . . . 2"

9. Drawings show typical reinforcing conditions. Contractor shall prepare detailed placement drawings of all conditions showing quantity, spacing, sizes, clearance, laps, intersections and coverage required by structural details, applicable code and trade standards. Contractor shall notify reinforcing inspector of any adjustments from typical conditions which are proposed in placement drawings to facilitate field placement of reinforcing steel and concrete.
10. For non-contact #5 bar lap splice is 40" with minimum clear spacing of 1.25" and minimum clear cover of 0.625". For non-contact #6 bar lap splice is 47" with minimum clear spacing of 1.5" and minimum clear cover of 0.75".

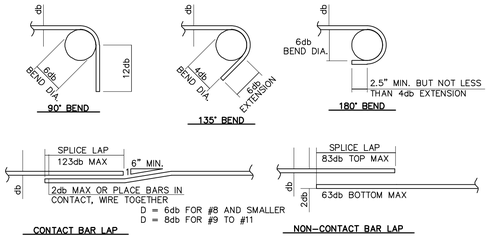

STRUCTURAL OBSERVATION GENERAL NOTES

1. Structural observation is required for the structural system in accordance with Section 1704.5 of the Los Angeles County Building Code. Structural observation is the visual observation at the construction stages and the complete structure for general conformance to the approved plans and specifications. Structural observation does not waive the responsibility for the inspections required of the building inspector or the special inspector.
2. The owner shall employ the registered design professional responsible for the structural design, or another registered design professional designated by the registered design professional responsible for the structural design to perform structural observations.
3. The owner or owner's representative shall coordinate and call for a meeting between the engineer or architect responsible for the structural design, structural observer, contractor, affected subcontractors and special inspectors. The purpose of the meeting shall be to identify the major structural elements and connections that affect the vertical and lateral load systems of the structure and to review scheduling of the required observations. A record of the meeting shall be included in the first observation report submitted to the building inspector.
4. The structural observer shall prepare a report of the Structural Observation Report Form for each significant stage of construction observed. The original of the Structural Observation report shall be sent to the building inspector's office and shall be signed and sealed (wet stamp) by the responsible structural observer. Copies of the report shall also be given to the owner, contractor, and deputy inspector. Any deficiency noted on the observation report will become the responsibility of the structural engineer of record to verify its completion by him(her), or by a registered special inspector at the discretion of the Structural Observer.
5. A final observation report and that of the registered special inspector must be submitted which shows that all observed deficiencies were resolved and structural system generally conforms with the approved plans and specifications.
6. When the owner elects to change the structural observer of record, the owner shall:

   a) Notify the building inspector in writing before the next inspection by submitting the completed Structural Observation Program and Designation of the Structural Observer Form.
   b) Call an additional reconstruction meeting
   c) Furnish the replacement structural observer shall approve the correction of the original observed deficiencies unless otherwise approved by the Building Official.

7. The engineer or architect of record shall develop all changes relating to the structural systems. The Building Official shall review and approved all changes to the approved plans and specifications.

INSPECTION REQUIREMENTS

1. It shall be the duty of the person doing the work authorized by the permit to notify the building official and any special inspectors required by the plans that such work is ready for inspection, and to provide access and means for such inspection.
2. The special inspector shall observe the work assigned for conformance with the approved design drawings and specifications. The special inspector shall furnish inspection reports to the building official, engineer or architect of record and other designated persons. All discrepancies shall be brought to the attention of the contractor for correction.
3. The special inspector shall submit a final signed report stating whether the work requiring special inspection was, to the best of their knowledge, in conformance with the approved plans, specifications, and applicable workmanship provisions of the code.
4. In conformance with CBC Section 1701, the following work requires special inspection:

CONCRETE:	None
MASONRY:	None
TIMBER:	None
STEEL:	None

County of Los Angeles
DEPARTMENT OF PUBLIC WORKS
BUILDING & SAFETY DIVISION
Los Angeles Regional Uniform Code Program

STRUCTURAL OBSERVATION PROGRAM
AND DESIGNATION OF THE
STRUCTURAL OBSERVER

PERMIT APPL. NO.:

Project Address: 2 PORTUGUESE BEND ROAD, Rolling Hills, CA	
Description of Work: Site Retaining Walls	
Owner: CITY OF ROLLING HILLS	Architect: Obelisk Architecture
Engineer of Record: Bolton Engineering Corp.	

STRUCTURAL OBSERVATION (ONLY CHECKED ITEMS ARE REQUIRED)

Firm or Individual to be responsible for the Structural Observation:
Name: Bolton Engineering Corp. Phone: (310)325-5580 Calif. Registration:

FOUNDATION	WALL	FRAME	DIAPHRAGM
■ Footing, Stem Walls, Piers	☐ Concrete	☐ Steel Moment Frame	☐ Concrete
☐ Mat Foundation	■ Masonry	☐ Steel Braced Frame	☐ Steel Deck
☐ Caisson, Piles, Grade Beams	☐ Wood	☐ Concrete Moment Frame	☐ Wood
☐ Retaining Foundation Hillside Special Anchors	☐ Others:	☐ Masonry Wall Frame	☐ Others:
☐ Others:		☐ Others:	

DECLARATION BY OWNER

I, the Owner of the project, declare that the above listed firm or individual is hired **by me** to be the Structural Observer.

Signature Date

DECLARATION BY ARCHITECT OR ENGINEER OF RECORD
(required if the Structural Observer is different from the Architect or Engineer of Record)

I, the Architect or Engineer of record for the project, declare that the above listed firm or individual is designated by me to be responsible for the Structural Observation.

Signature License No. Date

Version 2.0 (2014 LACBC) Dec. 16 2013

APPROVED
2023-9-27 ADA IMPROVEMENTS
ROLLING HILLS COMMUNITY ASSOCIATION ARCHITECTURAL COMMITTEE

* Submit finish materials for approval prior to installation

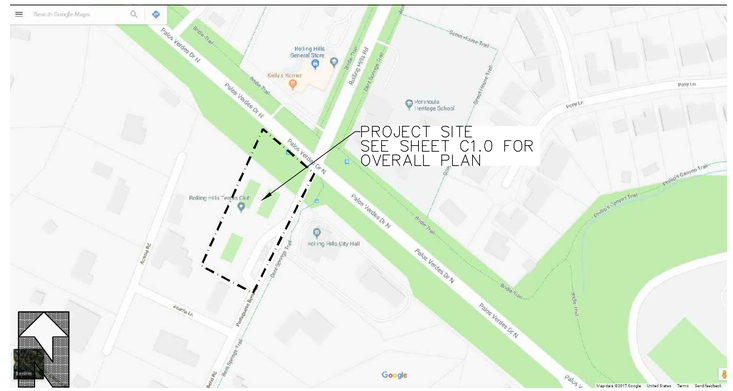

VICINITY MAP
SCALE: 1" = 200'

BASIS OF DESIGN

1. THE FOUNDATION DESIGNS FOR THE FENCE FOOTINGS, LIGHT POLE FOOTINGS, AND SITE RETAINING WALL ARE BASED ON THE VALUES PROVIDED IN THE 2021 CBC FOR CLAYEY SOILS WHICH PROVIDES FOR MINIMUM 12" EMBEDMENT INTO COMPETENT NATIVE MATERIAL. ALLOWABLE BEARING OF 1500psf, ALLOWABLE LATERAL OF 100pcf.
2. IN THE EVENT THAT UNUSUAL OR SUBSTANDARD SOIL CONDITIONS ARE ENCOUNTERED, RECOMPACTION IS REQUIRED PER THE DIRECTION OF THE INSPECTOR. IN THIS EVEN, THE FOOTING WIDTHS AND DEPTHS SHOWN HEREON MAY CHANGE. THE CONTRACTOR SHALL NOTIFY THE ENGINEER PRIOR TO PROCEEDING IN THE EVENT THAT POOR OR SUBSTANDARD SOIL CONDITIONS ARE ENCOUNTERED.
3. FOUNDATION DEPTHS SHOWN HEREON ARE BASED ON MINIMUM PENETRATION INTO FIRM NATIVE MATERIAL. LOOSE SOIL OR POOR SITE CONDITIONS MAY REQUIRE ADDITIONAL DEPTH TO ACHIEVE ADEQUATE BEARING, SUBJECT TO THE INSPECTOR.

BL2308170004
new retaining wall for grading only

BUILDING AND SAFETY DIVISION
Department of Public Works
APPROVED
UNDER LOS ANGELES COUNTY CODE
TITLES 26, 30 AND 31
09/27/2023 11:10:57 AM
PUBLIC WORKS
This set of plans and specifications must be kept at the job site at all times and it is unlawful to make any changes, modifications or additions to these plans or specifications without the prior written permission of the Building Official. The stamping of this set of plans and specifications SHALL NOT, under any circumstances, be deemed to permit or to be an approval of any work or activity that violates any provisions of any County Ordinance or State Law.

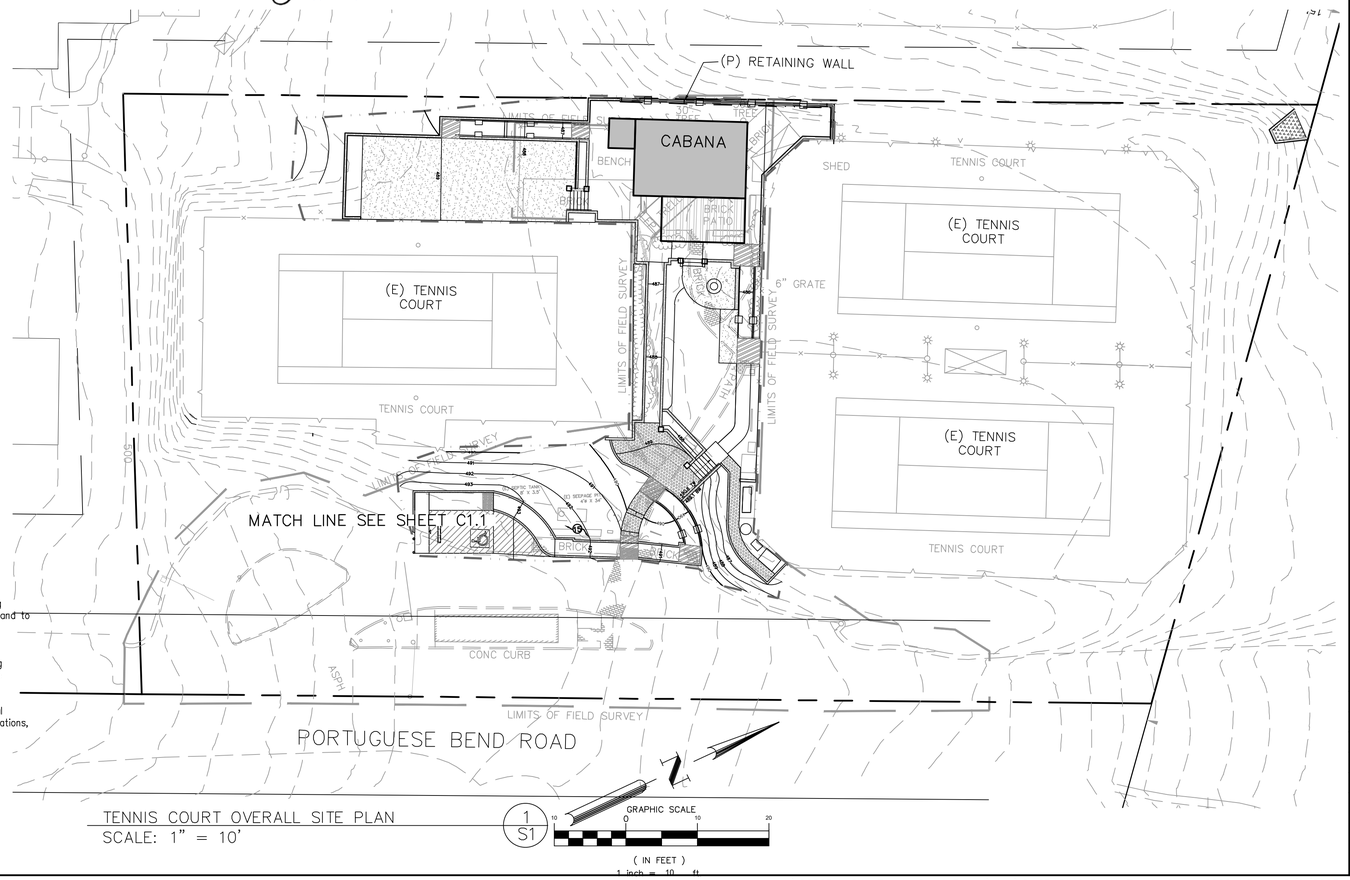

TENNIS COURT OVERALL SITE PLAN
SCALE: 1" = 10'
1 / S1

Revisions	By

Bolton Engineering Corp.
Civil Engineering and Surveying
25834 Narbonne Avenue Suite 210
Lomita, Ca. 90717
Ph: 310-325-5580 Fax: 310-325-5581

CLIENT: CITY OF ROLLING HILLS & ROLLING HILLS COMMUNITY ASSOCIATION
2 PORTUGUESE BEND ROAD
ROLLING HILLS, CA 90274

TITLE: RETAINING WALL PLAN
TENNIS COURT AREA IMPROVEMENTS
1 PORTUGUESE BEND ROAD
ROLLING HILLS, CA 90274

Date: June 6, 2023
Scale: AS SHOWN
Drawn: TMA
Checked: TMA
Job No. 8080_P1
Sheet S1
Of 10 Sheets

J:\8080P.1_City Tennis Court Parcel\dwg\C-GRADING PLAN_Tennis Court_2020_h3.dwg 8/2/2023 10:20:01 AM



HAND RAIL DETAIL
SCALE: 1" = 1'
2 / S2

WALL NOTES:

1. FOUNDATION: FORM AGAINST FIRM, UNDISTURBED NATIVE MATERIAL.
2. BACKDRAIN: 4" DIA PERFORATED PIPES, LAID AT 2% MINIMUM, PLACED WITH PERFORATIONS FACING DOWN AND SURROUNDED BY CRUSHED ROCK, WRAPPED WITH GEOFABRIC. DISCHARGE THROUGH FACE OF WALL OR OTHER APPROVED LOCATION.
3. WATERPROOFING: LAYER OF BITUMINOUS MATERIAL APPLIED OVER THE BACK OF THE WALL, COVERED BY AN IMPERVIOUS MEMBRANE COVERED BY FOAM BOARDS.
4. BACKFILL: BACKFILL TO BE CLEAN NATIVE MATERIAL. ALL IMPORT MATERIALS SHALL BE APPROVED BY INSPECTOR PRIOR TO USE. TESTING AT TWO-FOOT VERTICAL INTERVALS. COMPACTION OF NEW SOIL SHALL BE 95%.

REINFORCING NOTES:

- R1 PROVIDE #4 @ 12" IN FOOTING
- R2 #4 @ 18" OC HORIZONTAL BARS, MIN.
- R3 VERTICAL BARS: #4 @ 12" O.C. MIN

NOTE:

1. RETAINING WALL PER SEPARATE PERMIT
2. FOOTINGS SHALL BE EMBEDDED 12" MIN. INTO NATURAL SOIL AND/OR AT LEAST 24 INCHES BELOW ADJACENT GRADE.
3. RETAINING WALL DAMP PROOFING TO BE INSPECTED PRIOR TO PLACEMENT OF BACKFILL.

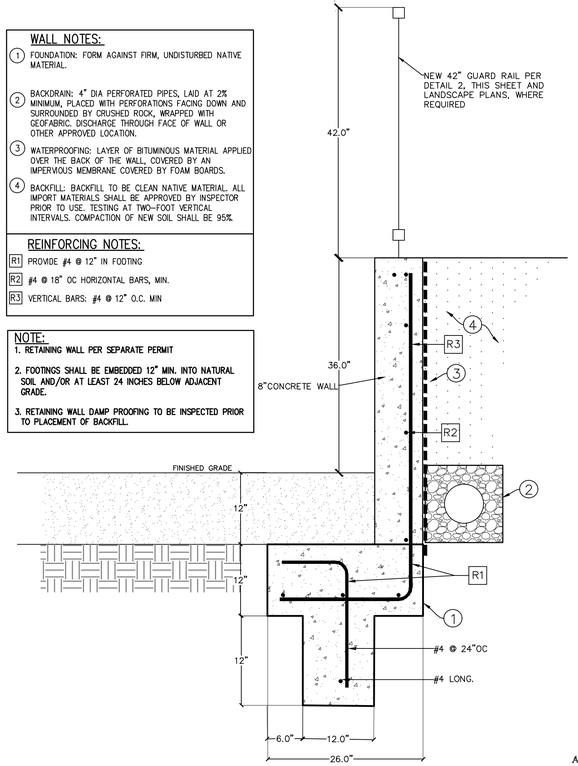

36' RETAINING WALL DETAIL
SCALE: 1" = 1'
1 / S2

CITY OF ROLLING HILLS
Approved by: [signature]
PLANNING DEPARTMENT
Date: 9/27/23
ZC 23-071
Site retaining walls

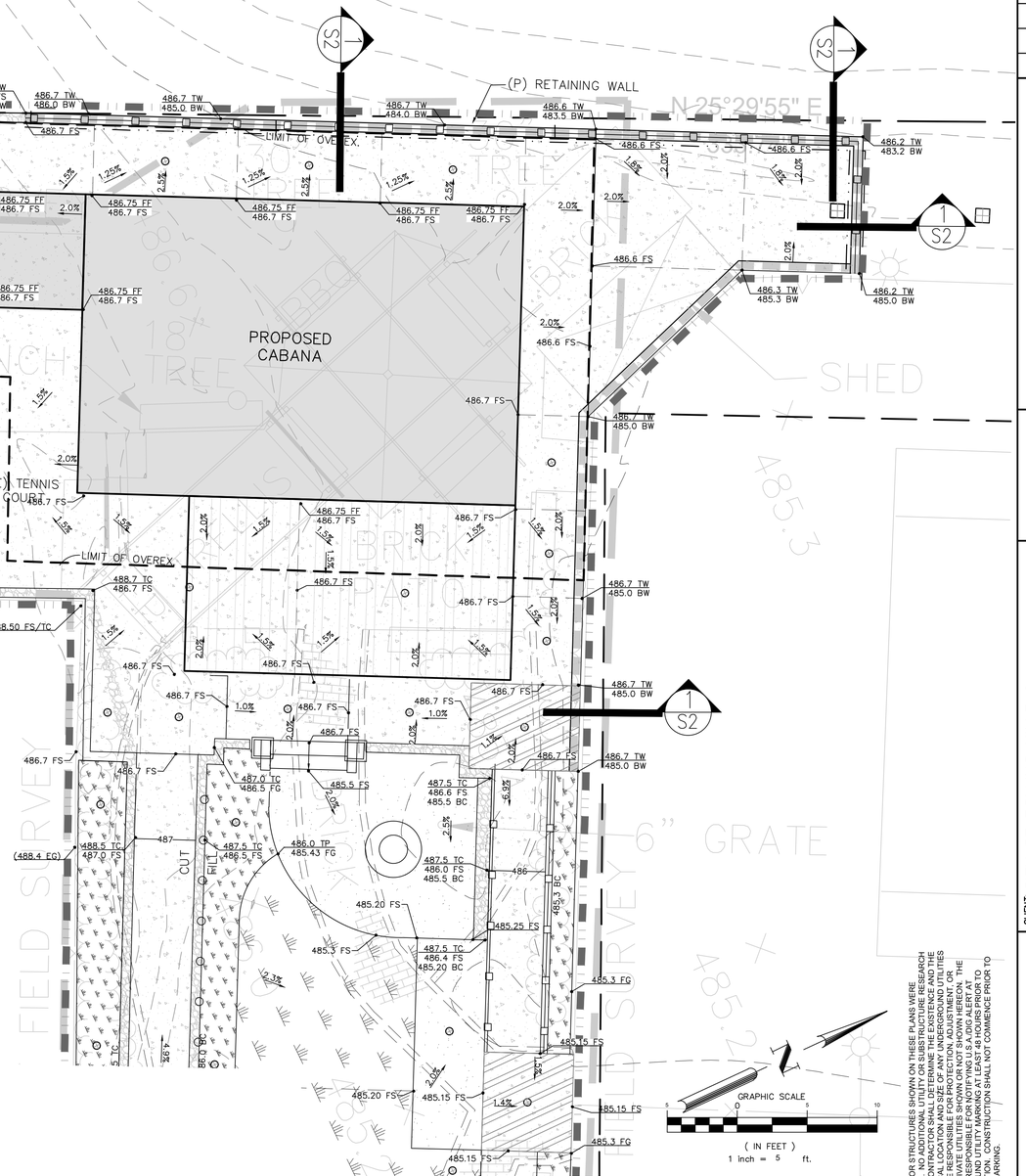

RETAINING WALL PLAN
SCALE: 1" = 5'
1 / S3.1

GRAPHIC SCALE
(IN FEET)
1 inch = 5 ft.

ANY UNDERGROUND UTILITIES OR STRUCTURES SHOWN ON THESE PLANS WERE PLOTTED FROM CITY RECORDS. NO ADDITIONAL UTILITY OR SUBSTRUCTURE RESEARCH HAS BEEN PERFORMED. THE CONTRACTOR SHALL DETERMINE THE EXISTENCE AND THE TRUE HORIZONTAL AND VERTICAL LOCATION AND SIZE OF ANY UNDERGROUND UTILITIES OR STRUCTURES WHETHER SHOWN HEREON OR NOT SHOWN HEREON. THE CONTRACTOR SHALL BE RESPONSIBLE FOR ANY DAMAGE TO ANY PUBLIC OR PRIVATE UTILITIES SHOWN OR NOT SHOWN HEREON. THE CONTRACTOR SHALL ALSO BE RESPONSIBLE FOR NOTIFYING U.S.A./DIG ALERT AT 1-800-227-2600 AT LEAST TWO DAYS BEFORE YOU DIG, AND ANY LOCAL AGENCIES AS REQUIRED PRIOR TO COMMENCING ANY CONSTRUCTION. CONSTRUCTION SHALL NOT COMMENCE PRIOR TO SAID UNDERGROUND UTILITY MARKING.

APPROVED
2023-9-27 ADA IMPROVEMENTS
ROLLING HILLS COMMUNITY ASSOCIATION ARCHITECTURAL COMMITTEE
[signature]
* Submit finish materials for approval prior to installation

BUILDING AND SAFETY DIVISION
Department of Public Works
APPROVED
UNDER LOS ANGELES COUNTY CODE
TITLES 26, 30 AND 31
by:
PUBLIC WORKS
09/27/2023 11:10:57 AM
This set of plans and specifications must be kept at the job site at all times and it is unlawful to make any changes, modifications or alterations to these plans or specifications without the prior written authorization of the Building Official. The stamping of this set of plans and specifications SHALL NOT, under any circumstances, be deemed to permit or to be an approval of any work or activity that violates any provisions of any County Ordinance or State Law.

DIGALERT
DIAL TOLL FREE 1-800-227-2600
AT LEAST TWO DAYS BEFORE YOU DIG
UNDERGROUND SERVICE ALERT OF SOUTHERN CALIFORNIA

Revisions	By

Bolton Engineering Corp.
Civil Engineering and Surveying
25834 Narbonne Avenue Suite 210
Lomita, Ca. 90717
Ph: 310-325-5580 Fax: 310-325-5581

CLIENT: CITY OF ROLLING HILLS & ROLLING HILLS COMMUNITY ASSOCIATION
2 PORTUGUESE BEND ROAD
ROLLING HILLS, CA 90274

TITLE: RETAINING WALL PLAN
TENNIS COURT AREA IMPROVEMENTS: CABANA
1 PORTUGUESE BEND ROAD
ROLLING HILLS, CA 90274

Date: June 6, 2023
Scale: AS SHOWN
Drawn: TMA
Checked: TMA
Job No. 8080_P1
Sheet S2
Of 10 Sheets

J:\8080P.1_City Tennis Court Parcel\dwg\C-GRADING PLAN_Tennis Court_2020_h3.dwg 8/2/2023 10:20:04 AM

Attachment C

ROLLING HILLS COMMUNITY ASSOC.
CABANA PROJECT



ABBREVIATIONS

ARCH.	Architectural	FIN.	Finish, Finished	PLYWD.	Plywood
BTWN.	Between	FLR.	Floor	RIS.	Risers
BLDG.	Building	F.J.	Floor Joist	R.O.	Rough Opening
BLK.	Block	FT'G.	Footing	R.R.	Roof Rafters
BM.	Beam	FRZ.	Freezer	REV.	Revision
CSMT.	Casement	GALV.	Galvanized	REFR.	Refrigerator
CLR.	Clear	G.D.	Garbage Disposal	REQ'D.	Required
CL'G.	Ceiling	GRD.	Grade	SHT.	Sheet
C.J.	Ceiling Joist	GYP. BD.	Gypsum Board	SL.	Slider
COL.	Column	HDR.	Header	SIM.	Similar
CONC.	Concrete	HGT.	Height	STL.	Steel
CONT.	Continuous	INT.	Interior	STRUCT.	Structural
DRY.	Dryer	MAX.	Maximum	TEMP.	Tempered
DIA.	Diameter	MIN.	Minimum	TR.	Treads
DIM.	Dimension(s)	MECH.	Mechanical	T.&G.	Tongue & Groove
D.W.	Dishwasher	MFGR.	Manufacturer	T.O.	Top of
DWGS.	Drawings	MICRO.	Microwave	TYP.	Typical
ELEV.	Elevation	MTL.	Metal	U.N.O.	Unless Noted Otherwise
EQ.	Equal	NAT.	Natural	V.I.F.	Verify In Field
(E)	Existing	(N)	New	WASH.	Washer
EXT.	Exterior	NO.	Number	W.H.	Water Heater
F.A.U.	Forced Air Unit	O.C.	On Center	WD.	Wood

LEGEND

- Concrete
- Masonry Wall
- New Wall
- Furred Ceiling / Arch
- # — Shearwall
- # — Door
- # — Window
- X / Detail # / AX.X / Sheet # — Detail
- XX / Room # / AX.X / Sheet # — Interior Elevations
- X / Sect. # / AX.X / Sheet # — Section
- X'-X" — Dimension to center line
- X'-X" — Dimension to face of framing/masonry (unless noted otherwise)
- X — Slope
- X'-X" — Elevation Heights

VICINITY MAP



CITY NOTES:

1. OBTAIN SANITATION DISTRICT APPROVAL FOR ANY NEW SEWER CONNECTION.
2. AN APPROVED BACKWATER VALVE IS REQUIRED FOR DRAINAGE PIPING SERVING FIXTURES LOCATED BELOW THE ELEVATION OF THE NEXT UPSTREAM MANHOLE COVER. FIXTURES ABOVE SUCH ELEVATION SHALL NOT DISCHARGE THROUGH THE BACKWATER VALVE.
3. USE 1% MINIMUM SLOPE AWAY FROM BUILDING PAD. HYDRAULIC CALCS SHALL BE SUBMITTED IF SUMP AND PUMP ARE REQ'D.
4. ALL UTILITIES SERVING THE SITE SHALL BE UNDER GROUNDED.
5. YARD DRAINAGE IMPROVEMENTS SHALL BE INSPECTED & CERTIFIED BY THE ENGINEER OF RECORD PRIOR TO FINAL APRVL.
6. A RE-INSPECTION FEE OF $27.00 WILL BE CHARGED FOR AN INSPECTION WHICH IS CALLED WITHOUT PROVIDING ACCESS, PLANS, OR IF THE JOB IS NOT READY.
7. ALL GENERAL CONTRACTORS, SUBCONTRACTORS, ARCHITECTS, AND ENGINEERS CONDUCTING BUSINESS WITHIN THE CITY OF ROLLING HILLS ARE REQUIRED TO MAINTAIN A CURRENT CITY BUSINESS LICENSE.
8. ALL CONSTRUCTION WASTE AND DEBRIS MUST BE CONTAINERIZED AT ALL TIMES.
9. PRE-GRADE MEETING REQUIRED WITH CITY BUILDING INSPECTOR, GENERAL CONTRACTOR, OWNER OR OWNER'S AGENT, SOILS ENGINEER, GEOLOGIST (IF APPLICABLE) AND GRADING CONTRACTOR, PRIOR TO ANY WORK COMMENCING ON THE SITE.
10. DUST CONTROL MEASURES SHALL BE MAINTAINED THROUGHOUT THE DURATION OF THE PROJECT.
11. THE CF-6R FORM SHALL BE COMPLETED PRIOR TO FINAL INSPECTIONS ON NEW CONSTRUCTION.
12. FABRICATION OF STRUCTURAL STEEL SHALL BE BY AN APPROVED FABRICATOR OR FABRICATION SHALL BE CONTINUOUSLY INSPECTED BY A REGISTERED INSPECTOR.
13. SPECIFY FLUORESCENT LIGHTS RATED AT NO LESS THAN 40/ LUMENS PER WATT FOR GENERAL LIGHTINGS IN KITCHENS AND IN BATHROOMS WITH TUB OR SHOWER PER TITLE 24 SECTION 150 (K) 1 TO 4 (SEE EXCEPTIONS).

PUBLIC WORKS DEPARTMENT NOTES:

18. ALL IRRIGATION MUST MEET CURRENT CITY REQUIREMENTS FOR PROPER INSTALLATION.
19. NO DISCHARGE OF CONSTRUCTION WASTE FROM THE PREMISES IS PERMITTED.
20. A PROPERTY LINE CLEAN OUT MUST BE INSTALLED ON THE SANITARY SEWER LATERAL (PER STANDARD PLAN)
21. IF ANY SEWER LATERAL IS REUSED, IT MUST BE TELEVISED TO CHECK ITS STRUCTURAL INTEGRITY. THE TAPE MUST BE AVAILABLE FOR REVIEW BY THE PUBLIC WORKS DEPARTMENT.
22. FINAL APPROVAL REQUIRED BY THE PUBLIC WORKS DEPARTMENT FOR STREET IMPROVEMENTS, CURB CORES, CURBS/GUTTERS, ETC.

F.A.U. / ATTIC NOTES:

23. PROVIDE DOUBLE JOISTS SUPPORTING THE UNIT. (IF REQUIRED)
24. PROVIDE 22" X 30" MINIMUM SCUTTLE TO ATTIC. SECTION 1505.1 UBC AND 307.3.2.1 UMC (30" X 30" IF FAU IN ATTIC).
25. PROVIDE ATTIC VENTILATION EQUAL TO 1/150 OF ROOF AREA MINIMUM AND INCREASED ACCORDINGLY, IF COMBUSTION AIR IS TAKEN FROM THE ATTIC. (SECTION 1505.3 UBC)
26. PROVIDE PERMANENT OUTLET AND LIGHT FIXTURE AT OR NEAR THE EQUIPMENT CONTROLLED BY A SWITCH LOCATED AT THE SCUTTLE. (IF REQUIRED)
27. PROVIDE SEISMIC SWAY BRACE OR ANCHOR UNIT TO PLATFORM.
28. CONDENSATE DRAIN TO APPROVED PLUMBING FIXTURE.

FIRE PREVENTION NOTES:

1. PROVIDE A MINIMUM UNOBSTRUCTED WIDTH OF 15 FEET, EXCLUSIVE OF SHOULDERS, EXCEPT FOR APPROVED SECURITY GATES IN ACCORDANCE WITH SECTION 503.6, AND AN UNOBSTRUCTED VERTICAL CLEARANCE "CLEAR TO SKY" FIRE DEPARTMENT VEHICULAR ACCESS TO WITHIN 150 FEET OF ALL PORTIONS OF THE EXTERIOR BUILDING WALLS. FIRE CODE 503.2.1
2. APPROVED BUILDING ADDRESS NUMBERS, BUILDING NUMBERS OR APPROVED BUILDING IDENTIFICATION SHALL BE PROVIDED AND MAINTAINED SO AS TO BE PLAINLY VISIBLE AND LEGIBLE FROM THE STREET FRONTING THE PROPERTY. THE NUMBERS SHALL CONTRAST WITH THEIR BACKGROUND, BE ARABIC NUMERALS OR ALPHABET LETTERS, AND BE A MINIMUM OF 4 INCHES HIGH WITH A MINIMUM STROKE WIDTH OF 0.5 INCH. FIRE CODE 505.1
3. THE REQUIRED FIRE FLOW FOR FIRE HYDRANTS AT THIS LOCATION IS 1,500 GPM, AT 20 PSI RESIDUAL PRESSURE, FOR A DURATION OF 2 HOURS OVER AND ABOVE MAXIMUM DAILY DOMESTIC DEMAND. FIRE CODE 507.3, TABLE 8105.1, COUNTY OF LOS ANGELES FIRE DEPARTMENT REGULATION 8.
4. PLANS SHOWING UNDERGROUND PIPING, FIRE DEPARTMENT CONNECTION, OR PRIVATE ON-SITE FIRE HYDRANTS SHALL BE SUBMITTED TO THE SPRINKLER PLAN CHECK UNIT FOR REVIEW AND APPROVAL PRIOR TO INSTALLATION. FIRE CODE 901.2, COUNTY OF LOS ANGELES FIRE DEPARTMENT REGULATION 7.
5. THE INSPECTION, HYDROSTATIC TEST AND FLUSHING OF THE UNDERGROUND FIRE PROTECTION PIPING SHALL BE WITNESSED BY AN AUTHORIZED FIRE DEPARTMENT REPRESENTATIVE. NO UNDERGROUND PIPING OR THRUST BLOCKS SHALL BE COVERED WITH EARTH R HIDDEN FROM VIEW UNTIL THE FIRE DEPARTMENT REPRESENTATIVE HAS BEEN NOTIFIED AND GIVEN NOT LESS THAN 48 HOURS IN WHICH TO INSPECT SUCH INSTALLATIONS. FIRE COD E901.5, COUNTY OF LOS ANGELES FIRE DEPARTMENT REGULATION 7.
6. BUILDING CODE OCCUPANCY CLASSIFICATION FOR THIS STABLE IS "U: UTILITY AND MISCELLANEOUS GROUP, STABLE"
7. BUILDING CODE TYPE OF CONSTRUCTION CLASSIFICATION FOR THE PROJECT IS "TYPE V-A"
8. PROVIDE AN APPROVED AUTOMATIC IRE SPRINKLER SYSTEM AS SET FORTH BY BUILDING CODE 903 AND FIRE CODE 903. PLANS SHALL BE SUBMITTED TO SPRINKLER PLAN CHECK UNIT FOR REVIEW AND APPROVAL PRIOR TO INSTALLATION.REASON: FIRE CODE 503.1.1 EXCEPTION #1 INCREASED TRAVEL DISTANCE.
9. ALL ROF COVERING SHALL BE CIASS "A" AS SPECIFIED IN BUILDING CODE 1505.1.1 (RESIDENTIAL CODE R327.5.2 & R902)
10. ROOF VALLEY FLASHING SHALL BE NOT LESS THAN 0.019 INCH(NO. 26 GALVANIZED SHEET GAGE) CORROSION-RESISTNAT M.ETAL INSTALLED OVER MINIMUM 36 INCH WIDE UNDERLAYMENT CONSISTING OF ONE LAYER OF MO. 72 ASTM CAP SHEET MEETING RUNNING THE FULL LENGTH OF THE VALLEY. (RESIDENTIAL CODE R327.5.3 AND BUILDING CODE 705A.3)
11. ROOF GUTTERS SHALL BE PROVIDED WITH A MEANS TO PREVENT THE ACCUMMULATION OF LEAVES AND DEBRIS IN THE GUTTER. (RESIDENTIAL CODE R327.534 AND BUILDING CODE 705A.4)
12. CLEARANCE OF BRUSH AND VEGETATION GROWTH SHALL BE MAINTAINED PER FIRE CODE 325
13. EXTERIOR WALLS HAVE 1 HOUR FIRE RESISTANCE RATINGS.
    1. EXTERIOR FACE: BOARD AND BATTEN SIDING OVER 2 LAYERS OF 15 LB. FELT AND 112" PLYWOOD. IGNITION MATERIAL MATCH EXISTING RESIDENCE
    2. INTERIOR FACE: 5/8" TYPE 'X' GYP. BOARD OVER 2x6 @ 16"0C, SEE TITLE 24 FOR INSULATION REQUIREMENTS
14. ALL FIRE HYDRANTS SHALL MEASURE 6"X4"X2-1/2", BRASS OR BRONZE, CONFORMING TO AMERICAN WATER WORKS ASSOCIATION STANDARD 0503, OR APPROVAL EQUAL, AND SHALL BE INSTALLED IN COMPLIANCE WITH THE COUNTY OF LOS ANGELES FIRE DEPARTMENT REGULATION 8. FIRE CODE 507.5 AND REGULATION 8.
15. ALL REQUIRED PUBLIC FIRE HYDRANTS SHALL BE INSTALLED, TESTED AND ACCEPTED PRIOR TO BEGINNING CONSTRUCTION. FIRE CODE 501.4
16. VEHICULAR ACCESS MUST BE PROVIDED AND MAINTAINED SERVICEABLE THROUGHOUT CONSTRUCTION. FIRE CODE 10.207
17. PRIOR TO BUILDING PERMIT FINAL APPROVAL, THE PROPERTY SHALL BE IN COMPLIANCE WITH THE VEGETATION CLEARANCE REQUIREMENTS PRESCRIBED IN CALIFORNIA RESOURCES CODE SECTION 4291, CALIFORNIA GOVERNMENT CODE SECTION 51182, AND THIS CODE. (FIRE CODE 4708.3)
18. CLEARANCE OF BRUSH AND VEGETATIVE GROWTH SHALL BE MAINTAINED PER FIRE CODE 325
19. ANCILLARY BUILDINGS AND STRUCTURES AND DETACHED ACCESSORY STRUCTURES SHALL COMPLY WITH THE PROVISIONS OF THE RESIDENT AIL CODE R327.10.1 AND BUILDING CODE 710A.1

BEST MANAGEMENT PRACTICES FOR CONSTRUCTION ACTIVITIES

Storm Water Pollution Control Requirements for Construction Activities Minimum Water Quality Protection Requirements for All Development Construction Projects/Certification Statement

The following is intended as minimum notes or as an attachment for building and grading plans and represent the minimum standards of good housekeeping that must be implemented on all construction sites regardless of size. (Applies to all permits)

- Eroded sediments and other pollutants must be retained on site and may not be transported from the site via sheetflow, swales, area drains, natural drainage courses or wind.
- Stockpiles of earth and other construction related materials must be protected from being transported from the site by the forces of wind or water.
- Fuels, oils, solvents and other toxic materials must be stored in accordance with their listing and are not to contaminate the soil and surface waters. All approved storage containers are to be protected from the weather. Spills must be cleaned up immediately and disposed of in a proper manner. Spills may not be washed into the drainage system.
- Non-stormwater runoff from equipment and vehicle washing and any other activity shall be contained at the project site.
- Excess or waste concrete may not be washed into the public way or any other drainage system. Provisions shall be made to retain concrete wastes on site until they can be disposed of as solid waste.
- Trash and construction related solid wastes must be deposited into a covered receptacle to prevent contamination of rainwater and dispersal by wind.
- Sediments and other materials may not be tracked from the site by vehicle traffic. The construction entrance roadways must be stabilized so as to inhibit sediments from being deposited into the public way. Accidental depositions must be swept up immediately and may not be washed down by rain or other means.
- Any slopes with disturbed soils or denuded of vegetation must be stabilized so as to inhibit erosion by wind and water.
- Other: -

As the project owner or authorized agent of the owner, I have read and understand the requirements listed above, necessary to control storm water pollution from sediments, erosion, and construction materials, and I certify that I will comply with these requirements.
Print Name _____ (Owner or authorized agent of the owner)
Signature _____ (Owner or authorized agent of the owner)
Date _____
*The above Best Management Practices are detailed in the California Storm Water Best Management Practices Handbook,

OCCUPANCY LOADS

Name	Area	Occupancy Factor	Max Capacity
ADA RESTROOM	60 SF	35	1
CABANA	593 SF	15	39
TRELLIS	266 SF	15	17
TENNIS COURTYARD	1263 SF	15	84
COURTYARD	828 SF	15	55
Grand total			196

1

PROJECT CONTACTS

OWNER:	ROLLING HILLS COMMUNITY ASSOC.
ARCHITECT:	Obelisk Architects 3800 Pacific Coast Highway Torrance, CA 90505 Phone: 1.310.373.3568 Contact: Nagy Bakhoum
STRUCTURAL:	G&G STRUCTURES, INC. 24702 NARBONNE AVE. LOMITA, CA. 90717 PH: 310-294-8111 FAX: 310-294-8112
SURVEYOR:	Bolton Engineering Corp. Civil Engineering and Surveying 25834 Narbonne Avenue Suite 210 Lomita, Ca. 90717 Ph: 310-325-5580 Fax: 310-325-5581

PROJECT SUMMARY

PROJECT ADDRESS:	#2 PORTUGUESE BEND ROAD ROLLING HILLS, CALIFORNIA 90274
PROJECT DESCRIPTION:	DEMO EXISTING CABANA, NEW TENNIS COURT CABANA WITH ATTACHED ADA BATHROOM AND ATTACHED WOOD TRELLIS (CABANA - 744 S.F. TRELLIS 270 S.F.)
FIRE ZONE: V/FHSZ CBC CHAPTER 7A	
ZONE:	RAS-2 SPRINKLERED: NO
BUILDING TYPE:	CABANA WITH ATTCHED TRELLIS
PLUMBING FIXTURE	
OCCUPANCY GROUP:	A-5
CONSTRUCTION TYPE:	Type V-B (NON-SPRINKLERED)
APPLICABLE CODES:	2022 CBC, 2022 CMC, 2022 CPC & 202 CEC w/State of 2022 California Title 24,California Energy Code and C.R.C.
LEGAL DESCRIPTION:	

1

SHEET INDEX

GENERAL			
G-001	Cover Sheet	E-3	Electrical Plan
G-002	General Notes	E-4	Electrical Plan
G-003	General Notes	E-5	Electrical Plan
ARCHITECTURAL		E-6	Electrical Plan
A-001	Site Plan	MECHANICAL	
A-002	Accessible Route Plan	M-1	Mechanical
A-003	Area Plan	M-2	Mechanical
A-101	First Floor / Roof Plan	M-3	Mechanical
A-102	ADA Restroom	PLUMBING	
A-103	ADA Kitchen	P-1	Plumbing Plan
A-201	Elevations	P-2	Plumbing Plan
A-301	Building Sections	P-3	Plumbing Plan
A-401	Perspectives	P-4	Plumbing Plan
A-402	Renderings	P-5	Plumbing Plan
A-501	First Floor Reflected Ceiling Plan / Interior Elevations	Grand total: 49	
A-601	Architectural Details		
A-602	Architectural Details		
A-603	Architectural Details		
A-604	Architectural Details		
E-101	Electrical Plan		
STRUCTURAL			
S0.1	General Notes		
S1.0	Foundation + Roof Framing Plan		
S3.0	Details		
S3.1	Details		
STRUCTURAL			
HFX	Hardie Frame Details		
CIVIL			
C0.0	Cover Sheet		
C0.1	Toppgraphic Survey		
C1.0	Overall Site Plan		
C1.1	Enlarged Grading & Draining Plan		
C1.2	Enlarged Grading & Draining Plan		
C1.3	Enlarged Grading & Draining Plan		
C1.4	Enlarged Grading & Draining Plan		
C2.0	Site Sections & Details		
C3.0	Site Sections & Details		
C3.1	Site Sections & Details		
ESCP	Erosion And Sediment Control Plan		
ELECTRICAL			
E-1	Electrical Plan		
E-2	Electrical Plan		

AREA BREAKDOWN

Name	Area Type	Area
NEW COURT VEIWING AREA	Exterior Area	1508 SF
CABANA	Gross Building Area	747 SF
TRELLIS	Exterior Area	270 SF
COURTYARD	Exterior Area	1028 SF

BL2310050015
Tennis court improvement for new cabana, restroom and path of travel access with ADA parking stall

BUILDING AND SAFETY DIVISION
Department of Public Works
APPROVED
UNDER LOS ANGELES COUNTY CODE
TITLES 26, 30 AND 31
EVP
PUBLIC WORKS
03/27/2024 2:05:07 PM
This set of plans and specifications must be kept at the job site at all times and it is unlawful to make any changes, modifications or additions to these plans or specifications without the prior written permission of the Building Official. The stamping of this set of plans and specifications SHALL NOT, under any circumstances, be deemed to permit or to be an approval of any work or activity that violates any provisions of any County Ordinance or State Law.

OBELISK ARCHITECTS
A Professional Corporation

3800 PACIFIC COAST HIGHWAY
TORRANCE, CALIFORNIA 90505
obeliskarc.com
310.373.0810 fax
310.373.3568 tel

PROJECT

Rolling Hills Community Association

#2 Portuguese Bend Road
Rolling Hills, Ca. 90274

No.	Description	Date
1	PLANNING CORRECTIONS	8-17-2023

PROJECT NUMBER
Project Number

DATE
March 19, 2024

STAMP



SHEET TITLE

Cover Sheet

THIS DOCUMENT IS FURNISHED IN CONFIDENCE FOR THE LIMITED PURPOSE OF EVALUATION, BIDDING OR REVIEW. THIS DOCUMENT AND ITS CONTENTS MAY NOT BE USED FOR ANY OTHER PURPOSE AND MAY NOT BE REPRODUCED OR DISCLOSED TO OTHERS WITHOUT THE PRIOR WRITTEN AUTHORIZED CONSENT OF OBELISK ARCHITECTS ALL RIGHTS RESERVED (C) 1997-2022

SHEET
G-001

ENGINEERING DIVISION NOTES

1. ALL BASEMENTS, OIL WELLS, SUBSTRUCTURES, SUPERSTRUCTURES, LANDSCAPE, HARDSCAPE, UTILITY POLES, UTILITY BOXES, UTILITY VENTS, UTILITY VAULTS, UTILITY CABINETS, UTILITY OVERHEAD LINES AND WATER HYDRANTS ARE SHOWN ON SITE PLAN.
2. PROVIDE PLAN AND PROFILE OF SEWER LATERAL. SEWER LATERAL SHALL BE CONNECTED TO MAIN SEWER LINE WITHIN FRONTAGE SECTION OF MAIN SEWER LINE. SEWER LATERAL SHALL BE PERPENDICULAR TO MAIN SEWER LINE. MINIMUM SEWER LATERAL DIAMETER SHALL BE 4 INCHES. QUALITY/QUANTITY OF SEWAGE CONSTITUENTS SHALL COMPLY WITH THE REQUIREMENTS OF THE LATEST EDITION OF THE WASTEWATER ORDINANCE OF THE SANITATION DISTRICTS OF LOS ANGELES COUNTY. PROVIDE 6 INCH CLEANOUT IMMEDIATELY BEHIND SIDEWALK. ENCASE CLEAN-OUT IN CONCRETE BOX MARKED "S" OR "SEWER". DESIGN SHALL BE PERFORMED BY A REGISTERED CIVIL ENGINEER.
3. SEWER LATERAL SHALL BE CONNECTED TO MAIN SEWER LINE WITHIN FRONTAGE SECTION OF MAIN SEWER LINE. SEWER LATERAL SHALL BE PERPENDICULAR TO MAIN SEWER LINE. MINIMUM SEWER LATERAL DIAMETER SHALL BE 4 INCHES. NO CONNECTION TO EXISTING SEWER IS ALLOWED UNLESS THE EXISTING SEWER MEETS THE CURRENT CODE REQUIREMENTS AND APPROVED BY THE BUILDING AND SAFETY DIVISION. QUALITY/QUANTITY OF SEWAGE CONSTITUENTS SHALL COMPLY WITH THE REQUIREMENTS OF THE LATEST EDITION OF THE WASTEWATER ORDINANCE OF THE SANITATION DISTRICTS OF LOS ANGELES COUNTY. PROVIDE 6 INCH CLEAN-OUT IMMEDIATELY BEHIND SIDEWALK. ENCASE CLEAN-OUT IN CONCRETE BOX MARKED "S" OR "SEWER". DESIGN SHALL BE PERFORMED BY A REGISTERED CIVIL ENGINEER.
4. PROVIDE TRENCHING/BORING DETAIL FOR WORK IN PUBLIC RIGHT-OF-WAY. PROVIDING SHORING PLANS AND CALCULATIONS FOR EXCAVATION IN EXCESS OF 5 FEET DEEP. TRENCHING/BORING AND SHORING DESIGN SHALL BE BY A REGISTERED GEOTECHNICAL ENGINEER.
5. DAMAGED SIDEWALK , DRIVEWAY, CURB, GUTTER, AND PAVEMENT SHALL BE REPLACED TO THE SATIFACTION OF THE CITY ENGINEER OR HIS REPRESENTATIVE.
6. CONSTRUCT NEW CONCRETE HANDICAP RAMP WHERE NOTED ON SITE PLAN. NEW CONCRETE SHALL BE CLASS 520-C-2500.
7. CONSTRUCT NEW CONCRETE DRIVEWAY WHERE NOTED ON SITE PLAN. NEW CONCRETE SHALL BE CLASS 520-C-2500.
8. CONSTRUCT NEW CONCRETE SIDEWALK WHERE NOTED ON SITE PLAN. NEW SIDEWALK SHALL MATCH EXISTING. NEW CONCRETE SHALL BE CLASS 520-C-2500.
9. CONSTRUCT NEW CONCRETE CURB AND GUTTER WHERE NOTED ON SITE PLAN. NEW CURB SHALL HAVE FACE HEIGHT OF 6 INCHES OR MATCH EXISTING. NEW GUTTER SHALL BE 12 INCHES WIDE OR MATCH EXISTING. NEW CONCRETE SHALL BE CLASS 520-C-2500.
10. CONSTRUCT NEW FULL DEPTH ASPHALT CONCRETE PAVEMENT WHERE NOTED ON SITE PLAN. ASPHALT CONCRETE SHALL BE CLASS D1-AR-4000.
11. PROVIDE IRRIGATION AND LANDSCAPING PLANS FOR CITY ENGINEERS APPROVAL.
12. COMMERCIAL VEHICLES TRANSPORTING SOIL, EQUIPMENT OR CONSTRUCTION MATERIALS AND HAVING UNLADEN WEIGHT AS DEFINED IN SECTION 660 OF CVC OF 6000 POUNDS OR MORE OR HAVING MANUFACTURER'S GROSS WEIGHT RATING AS DEFINED IN SECTION 390 OF CVC OF 10,000 POUNDS OR MORE SHALL USE DESIGNATED TRUCK ROUTE TO COMMUTE TO PROJECT SITE. ANY COMMERCIAL VEHICLE HAVING A FULLY LADEN WEIGHT OF 20,000 POUNDS OR MORE SHALL NOT USE CONDITIONAL TRUCK ROUTE.
13. WORK IN PUBLIC RIGHT-OF-WAY SHALL COMPLY WITH THE LATEST EDITION OF THE APWA STANDARD PLANS AND SPECIFICATIONS AND SHALL BE EXECUTED TO THE SATISFACTION OF THE CITY ENGINEER AND/OR HIS REPRESENTATIVE. TRENCHING, DIGGING, DRILLING, BORING, SAWCUTTING AND EXCAVATION IN PUBLIC RIGHT-OF-WAY BE PERFORMED BY A LICENSED CONTRACTOR. CONTRACTORS AND SUBCONTRACTORS SHALL POSSESS SOLID BUSINESS LICENSE. CONTRACTOR SHALL MAINTAIN CONSTRUCTION PERMIT AND AN APPROVED SET OF PLANS ON SITE. CONTRACTOR SHALL NOTIFY THE DEPARTMENT OF PUBLIC WORKS AND ENGINEERING 24 HOURS PRIOR TO ANY TRENCHING, DIGGING, DRILLING, BORING, SAWCUTTING OR ANY OTHER METHOD OF ALTERING THE EXISTING CONDITION OF CITY RIGHT-OF-WAY. CONTRACTOR SHALL SURRENDER ALL REQUIRED CONSTRUCTION DOCUMENTS TO CITY ENGINEER OR HIS REPRESENTATIVE UPON REQUEST.
14. PRIOR TO ISSUING THE BUILDING/ENGINEERING PERMIT, THE CONTRACTOR MUST PROVIDE PROOF OF INSURANCE. CONTRACTOR SHALL MAINTAIN ON CITY FILES APPROVED ONE MILLION DOLLAR GENERAL LIABILITY AND ONE MILLION DOLLAR WORKER'S COMPENSATION INSURANCE POLICY NAMING THE CITY ADDITIONAL INSURED WITH 30 DAY CANCELLATION NOTICE. THE INSURANCE POLICY SHALL STATE THE CITY, ITS OFFICERS, ELECTED OFFICIALS, ATTORNEYS, EMPLOYEES, MEMBERS OF BOARDS AND COMMISIONS, AGENTS AND VOLUNTEERS ARE RECOGNIZED AS ADDITIONAL INSURED. THE CERTIFICATE OF INSURANCE MUST STATE THAT THE INSURANCE IS "PRIMARY" AND NOT EXCESS. THE CANCELLATION CLAUSE SHALL STATE "SHOULD ANY OF THE ABOVE DESCRIBED POLICIES BE CANCELED BEFORE THE EXPIRATION DATE THEREOF, THE ISSUING COMPANY WILL ENDEAVOR TO MAIL 30 DAYS WRITTEN NOTICE TO THE CERTIFICATE HOLDER NAMED TO THE LEFT.
15. PUBLIC WORKS INSPECTOR SHALL INSPECT ALL STREET IMPROVEMENTS; ALL SEWER SYSTEMS INCLUDING ALL PIPING, TRENCHING, BACKFILLING AND SEWER EJECTOR; ALL STORM DRAIN SYSTEMS INCLUDING ALL PIPING, TRENCHING, BACKFILLING, CATCH BASINS, SUMP PUMPS AND/OR OIL/WATER SEPARATOR. FIRST INSPECTION SHALL TAKE PLACE AFTER FORMS ARE IN PLACE FOR SIDEWALKS, DRIVEWAYS ETC. OR AT THE TIME OF CONSTRUCTING THE SEWER LINE SADDLE. SECOND INSPECTION SHALL TAKE PLACE WHILE SIDEWALKS, DRIVEWAYS ETC. ARE BEING POURED AND FINISHED OR AT THE TIME OF BACKFILLING. BACKFILLING, COMPACTION, AND TESTING SHALL BE CONDUCTED IN ACCORDANCE WITH CITY STANDARDS AND TO THE SATISFACTION OF THE CITY ENGINEER AND/OR HIS REPRESENTATIVE. FINAL INSPECTION WILL BE MADE AFTER THE BUILDING DEPARTMENT HAS MADE THEIR FINAL INSPECTION. AT THAT TIME, IF ALL WORK PERTAINING TO PUBLC RIGHT-OF-WAY, DRAINAGE SYSTEM AND SEWER SYSTEM, ARE IN GOOD ORDER, YOUR DEPOSITS WILL BE RELEASED, LESS ANY AND ALL CHARGES. CONTACT THE DEPARTMENT OF PUBLIC WORKS AND ENGINEERING FOR ALLINSPECTIONS.
16. PERMITTEE SHALL ARRANGE FOR PUBLIC WORKS INSPECTION 24 HOURS PRIOR TO COMMENCING ANY WORK IN PUBLIC RIGHT-OF-WAY.
17. DRIVEWAY MAX. ANGLE OF APPROACH SHALL BE 15 DEG. RAMP BREAKOVER MAX. ANGLE SHALL BE 6 DEG. AND MAX. ANGLE OF DEPARTURE SHALL BE 8 DEG.
18. PERMITTEE SHALL SUBMIT COMPACTION REPORTS, CONCRETE/ASPHALT CLASS CERTIFICATES AND CONSTRUCTION DEMOLITION/DEBRIS FORM TO DEPARTMENT OF PUBLIC WORKS AND ENGINEERING PRIOR TO REQUESTING FINAL INSPECTION.
19. DUST CONTROL SHALL BE ENFORCED TO THE SATISFACTION OF THE CITY ENGINEER AND/OR HIS REPRESENTATIVE THROUGHOUT CONSTRUCTION.
20. NOISE CONTROL SHALL BE ENFORCED TO THE SATISFACTION OF THE CITY ENGINEER AND/OR HIS REPRESENTATIVE THROUGHOUT CONSTRUCTION. ACTUAL CONSTRUCTION IN PUBLIC RIGHT-OF-WAY MAY OCCUR ON SATURDAYS WITHOUT PRIOR AUTHORIZATION FROM CITY ENGINEER AND/OR HIS REPRESENTATIVE. AUTHORIZED WORK ON SATURDAYS SHALL OCCUR FROM 9:00 A.M. TO 5:00 P.M.
21. NO WORK IN PUBLIC RIGHT-OF-WAY SHALL OCCUR ON SUNDAYS OR NATIONAL HOLIDAYS.
22. PUBLIC RIGHT-OF-WAY SHALL BE KEPT CLEAR AND CLEAN TO SATISFACTION OF CITY ENGINEER AND/OR HIS REPRESENTATIVE THROUGHOUT CONSTRUCTION. NO STORAGE OF DEBRIS, MATERIALS OR EQUIPMENT SHALL BE ALLOWED ON PUBLIC RIGHT-OF-WAY WITHOUT PRIOR PAGE 4 OF 5 WRITTEN CONSENT FROM CITY ENGINEER AND/OR HIS REPRESENTATIVE. SUCH CONSENT SHALL BE RENEWED DAILY. IF CITY CREWS ARE CALLED TO PERFORM WORK OF CONTRACTOR, REGARDING CITY RIGHT-OF-WAY, CONTRACTOR SHALL BE CHARGED FOR ALL EXPENSES INCURRED BY CITY.
23. TREES AND LANDSCAPING TO BE REMOVED FROM PUBLIC RIGHT-OF-WAY SHALL BE REPLACED IN KIND AND TO THE SATISFACTION OF THE CITY ENGINEER OR HIS REPRESENTATIVE.
24. TRAFFIC DELINEATION SHALL BE EXECUTED IN ACCORDANCE WITH THE LATEST EDITION OF THE WATCH MANUAL AND TO THE SATISFACTION OF THE CITY ENGINEER AND/OR HIS REPRESENTATIVE.
25. PERMITTEE SHALL LOCATE AND PROTECT EXISTING UTILITIES. PERMITTEE SHALL REPAIR AT HIS COST AND TO THE SATISFACTION OF THE CITY ENGINEER AND/OR HIS REPRESENTATIVE, ANY PAMAGE INFLICTED BY PERMITTEE ON EXISTING UTILITIES.

GRADING NOTES

1. ALL WORK SHALL BE IN ACCORDANCE WITH THE EXCAVATION AND GRADING CODE OF THE CITY AND ANY SPECIAL REQUIREMENTS OF THE PERMIT. ANY VIOLATION WILL RESULT IN THE STOPPING OF ALL WORK UNTIL THE VIOLATION IS CORRECTED.
2. NO WORK WHAT-SO-EVER SHALL BE STARTED WITHOUT FIRST NOTIFYING THE GRADING INSPECTOR OR SOILS ENGINEER.
3. CUT SLOPES SHALL BE NO STEEPER THAN 2 HORIZONTAL TO 1 VERTICAL.
4. FILL SLOPES SHALL BE NO STEEPER THAN 2 HORIZONTAL TO 1 VERTICAL AND SHALL HAVE NOT LESS THAN 90% COMPACTION AT THE FINISHED SURFACE, UNLESS SUPPORTED BY A SOIL STUDY PERFORMED BY A SOILS ENGINEER.
5. FILLS SHALL BE COMPACTED THROUGHOUT TO 90% DENSITY AS DETERMINED BY THE ASTM:D-1557-78, AND CERTIFIED BY THE SOILS ENGINEER.
6. CUT AND FILL SLOPES SHALL BE PLANTED WITH AN APPROVED GROUND COVER FOR EROSION CONTROL.
7. PLANTED SLOPES SHALL BE WATERED AND MAINTAINED.
8. FILL AREAS SHALL BE CLEANED OF ALL VEGETATION AND DEBRIS, SCARIFIED AND INSPECTED BY GRADING INSPECTOR OR SOILS ENGINEER AND APPROVED SOIL TESTING AGENCY PRIOR TO PLACING OR FILL.
9. PRIOR TO PLACING FILLS, THE BASINS LEFT BY PULLING TREES SHALL BE INSPECTED AND APPROVED BY THE GRADING INSPECTOR OR SOILS ENGINEER.
10. AS FILLS ARE PLACED, SLOPE BENCHING SHALL BE PROVIDED IF NATURAL GRADE IS OVER 5 HORIZONTAL TO 1 VERTICAL. BENCHING SHALL BE A MINIMUM OF 5' WIDTH, 15' WIDTH AT THE TOE WITH 5' EXPOSED.
11. ALL EXISTING FILLS ARE APPROVED BY THE GRADING INSPECTOR OR SOILS ENGINEER OR REMOVED BEFORE ANY ADDITIONAL FILLS ARE ADDED.
12. THE EXISTING IRRIGATION LINES AND CISTERNS SHALL BE REMOVED, OR CRUSHED IN PLACE AND BACKFILLED, AND APPROVED BY THE GRADING INSPECTOR OR SOILS ENGINEER.
13. APPROVED EROSION PROTECTION DEVICES SHALL BE PROVIDED AND MAINTAINED DURING THE RAINY SEASON AND SHALL BE IN PLACE AT THE END OF EACH DAYS WORK.
14. SANITARY FACILITIES SHALL BE MAINTAINED ON THE SITE FROM BEGINNING TO COMPLETION OF GRADING OPERATIONS PER CITYS REGULATION ON CONSTRUCTION SANITATION FACILITY.
15. THE LOCATION AND PROTECTION OF ALL UTILITIES IS THE RESPONSIBILITY OF THE PERMITTEE.
16. THE PERMITTEE SHALL NOTIFY THE ENGINEERING AND BUILDING SERVICES WHEN THE GRADING OPERATIONS IS READY FOR ROUGH GRADING INSPECTION. WHEN ALL WORK INCLUDING INSTALLATION OF ALL DRAINAGE STRUCTURES AND PROTECTIVE DEVICES HAS BEEN COMPLETED AND REQUIRED REPORTS HAVE BEEN SUBMITTED.
17. GRADING INSPECTION DURING INSTALLATION IS REQUIRED FOR ALL DRAIN DEVICES. FILL TERRACE BENCHES AND SLOPES MUST BE APPROVED BY THE SOILS ENGINEER AND DESIGN ENGINEER PRIOR TO TERRACE PAVING.
18. DRAINAGE PIPE THAT WILL UNDERLAY STRUCTURES MUST BE REINFORCED CONCRETE OR CAST IRON AND THE STRUCTURE FOUNDATIONS MUST BE ENGINEERED BY A FOUNDATION ENGINEER. THE DESIGN ENGINEER SHALL BE RESPONSIBLE FOR DEPUTY INSPECTION AND TESTING OF BACKFILL AND PIPE AND WILL CERTIFY TO THE STABILITY AND THAT THE WORK WAS DONE TO HIS SATISFACTION.
19. SUBMISSION OF PROFFESSIONAL OPINION THAT THE SUBSOILS HAVE SUFFICIENT STABILITY TO SUPPORT ADDITIONAL WEIGHT OF THE PROPOSED FILLS WITHOUT SETTLEMENT THAT WILL CAUSE DAMAGE TO PROPOSED IMPROVEMENTS MUST BE SUBMITTED TO THE BUILDING OFFICIALS PRIOR TO PLACEMENT OF FILL.
20. ALL TRENCH BACKFILLS IN SLOPES OR LEVEL AREAS OF PRIVATE PROPERTY SHALL BE TESTED AND CERTIFIED BY THE SITE SOIL TESTING FIRM. THE SOIL CERTIFICATION SHALL INCLUDE THE STABILITY OF THE BACKFILL AND THAT THE COMPACTION IS 90% OF THE MAXIMUM DRY DENSITY USING THE ASTM: D-1557-78.
21. ALL TRENCH BACKFILS IN PUBLIC PROPERTY WHERE PRIVATE PROPERTY STRUCTURES OR SLOPES BEAR ON THEM FOR SUPPORT SHALL BE CERTIFIED BY THE SITE SOIL TESTING FIRM.
22. THE ENGINEERING GEOLOGIST SHALL MAINTAIN PERIODIC INSPECTIONS AND SUBMIT A COMPLETE REPORT AND MAP UPON COMPLETION OF THE ROUGH GRADING.
23. ALL CUT SLOPES SHALL BE INVESTIGATED BOTH DURING AND AFTER GRADING BY AN ENGINEERING GEOLOGIST FOR ANY GEOLOGICAL HAZARDS OF WHICH HE IS AWARE EXISTS. SHOULD EXCAVATION DISCLOSE ANY GEOLOGICAL HAZARDS OR POTENTIAL GEOLOGICAL HAZARDS, THE ENGINEERING GEOLOGIST SHALL RECOMMEND NECESSARY TREATMENT TO THE BUILDING OFFICIAL FOR APPROVAL.
24. WHERE SUPPORT OR BUTTRESSING OF CUT AND NATURAL SLOPE IS DETERMINED TO BE NECESSARY BY THE ENGINEERING GEOLOGIST OR SOILS ENGINEER, THE SOILS ENGINEER WILL SUBMIT DESIGN, LOCATION AND CALCULATIONS TO THE BUILDING OFFICIALS PRIOR TO CONSTRUCTION. THE ENGINEERING GEOLOGIST AND SOILS ENGINEER WILL INSPECT AND CONTROL THE CONSTRUCTION OF THE BUTTRESSING AND CERTIFY TO THE STABILITY OF THE SLOPE AND ADJACENT STRUCTURES UPON COMPLETION.
25. THE DESIGN ENGINEER SHALL EXERCISE SUFFICIENT SUPERVISORY CONTROL DURING GRADING AND CONSTRUCTION TO INSURE COMPLIANCE WITH THE APPROVED PLANS.
26. DUST SHALL BE CONTROLLED CONTINUOUSLY BY WATERING OR BY OTHER APPROVED MEANS IF EXCAVATION. CONTRACTOR SHALL NOTIFY THE UNDERGROUND SERVICE ALERT (USA-1-800-422-4133) PRIOR TO ANY EXCAVATION.
27. THE HOLDER OF A SHORING PERMIT SHALL NOTIFY IN WRITING ALL THE OWNERS OF ADJOINING PROPERTIES NOT LESS THAN 10 DAYS BEFORE SUCH EXCAVATION IS TO COMMENCE. AN OSHA PERMIT IS ALSO REQUIRED, A COPY OF WHICH SHALL BE SUBMITTED TO THE BUILDING DIVISION. SHORING CONTRACTOR SHALL NOTIFY THE UNDERGROUND SERVICE ALERT (1-800-422-4133) PRIOR TO ANY EXCAVATION.
28. NO FENCE OR WALL OVER 42" SHALL BE CONSTRUCTED IN FRONT YARD SETBACK AREA. NO FENCE OR WALL OVER 6'-0" SHALL BE CONSTRUCTED ON REMAINING SITE PERIMETER.

BEST MANAGEMENT PRACTICES FOR CONSTRUCTION ACTIVITIES

1. ALL PERSONS WORKING AT THE SITE SHOULD OBTAIN, READ AND UNDERSTAND THE BEST MANAGEMENT PRACTICES PAMPLET FOR THE TYPE(S) OF CONSTRUCTION BEING DONE.
2. STOCKPILES OF SOIL, DEMOLITION DEBRIS, CEMENT, SAND, TOPSOIL ETC. MUST BE COVERED WITH WATERPROOF MATERIALS OR BERMED TO PREVENT BEING WASHED OFF SITE.
3. FUELS, OILS, PAINTS, AND OTHER LIQUID MATERIALS MUST BE KEPT INSIDE BERMED AREAS. SPILLS MUST NOT BE WASHED TO THE STREET.
4. WASTE CONCRETE MUST NOT BE WASHED INTO THE STREET, STORM DRAIN CATCH BASINS OR PUBLIC RIGHT-OF-WAY. ALL DUST AND SLURRY FROM CONCRETE CUTTING MUST BE REMOVED USING A WET-DRY VACUMM OR EQUIVALENT.
5. TRASH AND OTHER CONSTRUCTION SOLID WASTES MUST BE PLACED IN A COVERED TRASH RECEPTACLE.
6. ERODED SOIL FROM DISTURBED SLOPES MUST BE CONTAINED USING BERMS, SILT FENCES, SETTING BASINS OR GOOD EROSION MANAGEMENT PRACTICES SUCH AS RESEEDING.
7. WASH WATER FROM CLEANING CONSTRUCTION VEHICLES AND EQUIPMENT MUST BE KEPT ON-SITE WITHIN A CONTAINMENT AREA.

A. IN ADDITION TO THE REQUIREMENTS OF SECTION 106.4.4, EVERY PERMIT ISSUED SHALL EXPIRE AND BECOME NULL AND VOID IF THE BUILDING OR WORK AUTHORIZED BY SUCH PERMIT IS NOT COMPLETED WITHIN TWO YEARS FROM THE DATE OF SAID PERMIT.

B. AT LEAST TWO SIGNS, WEATHER PROOF, 12" X 18" MINIMUM SHALL BE POSTED ON THE CONSTRUCTION SITE SHOWING WORKING HOURS, NAME AND EMERGENCY PHONE NUMBER OF THE CONTRACTOR.

C. THE SANDBLASTING MUST BE WET SANDBLASTING, AND ALL THE PRECAUTIONARY MEASURES MUST BE TAKEN BY THE CONTRACTOR TO PROTECT LIFE AND PROPERTY OF NEIGHBORS, RESIDENTS AND THE PUBLIC. ADJACENT PROPERTY OWNERS MUST BE NOTIFIED AT LEAST TWO (2) DAYS IN ADVANCE OF SANDBLASTING.

D. NO DEMOLITION SHALL COMMENCE WITHOUT A VALID DEMOLITION PERMIT. WORK COMMENCED WITHOUT A VALID PERMIT MAY BE SUBJECTED TO A SPECIAL INVESTIGATION BEFORE A PERMIT MAY BE ISSUED FOR SUCH WORK.

E. DEMOLITION PERMIT - THERE WILL BE A 14 DAY WAITING PERIOD AFTER A DEMOLITION PERMIT APPLICATION IS FILED, BEFORE A DEMOLITION PERMIT MAY BE ISSUED. EVERY HOLDER OF A DEMOLITION PERMIT AND/OR BUILDING PERMIT SHALL COMPLETLY ENCLOSE BY FENCING THE CONSTRUCTION SITE PRIOR TO THE START OF DEMOLITION OR CONSTRUCTION.

F. AN OPERABLE WINDOW OR WINDOWS IN A WALL HAVING A WIDTH AND HEIGHT OF AT LEAST 18", WITH FLOOR TO SILL HEIGHT OF LESS THAN 30" THRU WHICH A PERSON MIGHT FALL TO LEVEL OF 30" OR MORE BELOW THE FINISH FLOOR SHALL BE PROVIDED WITH A PERMANENTGUARD RAIL CONFORMING TO THE REQUIREMENTS OF SEC. 509 AND TABLE 16-b.

G. FIRED BRICK EVERY 10'-0" MAX HORIZONTAL AND VERTICAL.

H. ALL SAFETY GLASS SHALL BE LABELED.

I. FIRE SPRINKLERS ARE REQUIRED PER ORD.

GENERAL REQUIREMENTS / NOTES:

1. THE INTENT OF THESE DOCUMENTS (I.E. SPECIFICATIONS, DRAWINGS, SCHEDULES) IS TO INCLUDE ALL ITEMS NECESSARY FOR THE PROPER EXECUTION AND COMPLETION OF THE WORK BY CONTRACTOR. THESE DOCUMENTS ARE COMPLEMENTARY, AND WHAT IS REQUIRED BY ONE SHALL BE AS BINDING AS IF REQUIRED BY ALL; PERFORMANCE BY THE CONTRACTOR SHALL BE REQUIRED ONLY TO THE EXTENT CONSISTENT WITH THESE DOCUMENTS AND REASONABLY INFERABLE FROM THEM AS BEING NECESSARY TO PRODUCE THE INTENDED RESULTS. CONTRACTOR SHALL EXECUTE THE WORK IN AS EXPEDITIOUS A MANNER AS POSSIBLE. CONTRACTOR TO SUBMIT CONSTRUCTION SCHEDULE AT START OF PROJECT AND PROVIDE MONTHLY UPDATES OF PROGRESS AND SCHEDULE. APPROVAL OF A SUBSTITUTION BY THE ARCHITECT SHALL NOT BE CONSTRUED AS A CHECK FOR GENERAL CONFORMANCE WITH THE DESIGN CONCEPT OF THE WORK AS EXPRESSED IN THE CONTRACT DOCUMENTS. THE OBLIGATION TO GUARANTEE DIMENSIONS AND QUANTITIES IS SOLELY THAT OF CONTRACTOR. ALL DRAWINGS/SPECIFICATIONS ARE ADDITIVE AND COMPLEMENT EACH OTHER WITH RELATED INFORMATION CONTRACTOR TO PROVIDE ALL TRADES/SUBCONTRACTORS ALL DRAWINGS AND SPECIFICATIONS AND VERIFY ANY DISCREPANCIES BEFORE PROCEEDING WITH CONSRUCTIONS. CONTACT ARCHITECT IMMEDIATELY IF ANY DISCREPANCIES ARE FOUND. THE FOLLOWING NOTES ARE MINIMUM REQUIREMENTS. IF A MORE STRINGENT SPECIFICATION OR CONDITION OCCURS ON THE CONSULTANT SET OF DRAWINGS, THE MORE STRINGENT OF THE TWO WILL APPLY. CONTRACTOR SHALL ADVISE ARCHITECT AND OWNER IN WRITING OF ANY RECOMMENDED CHANGES TO THE FOLLOWING NOTES AND SPECIFICATIONS AND SHALL SUBMIT WRITTEN CONFIRMATION TO ARCHITECT OF ANY CHANGES AND RECEIVE ARCHITECTS WRITTEN APPROVAL PRIOR TO ORDERING OR INSTALLATION. THE ARCHITECT WILL IN NO WAY BE RESPONSIBLE FOR HOW THE WORK IS PERFORMED. SAFETY IN, ON, OR ABOUT THE JOB SITE, MANNER AND METHODS OF PERFORMANCE OR TIMELINESS IN THE PERFORMANCE OF THE WORK.
2. "CONTRACTOR" REFERS TO BOTH THE GENERAL CONTRACTOR, HIS AGENTS AND SUBCONTRACTORS. "ARCHITECT" REFERS TO THE ARCHITECT OF RECORD OR HIS AGENT. CONSTRUCTION DOCUMENTS REFERS TO THESE GENERAL REQUIREMENTS/NOTES, SPECIFICATIONS, DRAWINGS, INFORMATION/INSTRUCTIONS PROVIDED/AVAILABLE TO BIDDERS, BID FORMS AND SUPPLEMENTS, ADDENDA, CONTRACT DOCUMENTS, CONTRACT FORMS, CONDITIONS OF THE CONTRACT, MODIFICATIONS, AND SUPPLEMENTAL INFORMATION AND WRITTEN DIRECTIVES PROVIDED BY THE ARCHITECT AND DESIGN TEAM/CONSULTANTS.
3. CONTRACTOR/ SUBCONTRACTORS SHALL FURNISH AND INSTALL ALL ITEMS NECESSARY TO COMPLETE THE WORK IN ACCORDANCE WITH BEST BUILDING PRACTICE AND INDUSTRY STANDARDS WHETHER SPECIFICALLY CALLED FOR OR NOT ON THE CONSTRUCTION DOCUMENTS. COMPLY WITH ALL ENVIRONMENTAL CONTROL REGULATIONS IN EFFECT. MANUFACTURER RECOMMENDATIONS ON ANY PRODUCT USED ON OR IN CONJUNCTION WITH THIS PROJECT SHALL BE STRICTLY FOLLOWED UNLESS THEY ARE IN CONTRADICTION WITH THE DRAWINGS AND SPECIFICATIONS. IF THIS OCCURS NOTIFY ARCHITECT IN WRITING IMMEDIATELY. THE 1987 EDITION OF THE AIA DOCUMENT A701 "INSTRUCTION TO BIDDERS" IS A PART OF THE CONSTRUCTION DOCUMENTS AND SHALL GOVERN THE BIDDING PROCESS. THE 1987 EDITION OF THE AIA DOCUMENT A201 "GENERAL CONDITIONS OF THE CONTRACT FOR CONSTRUCTION" IS A PART OF THE CONSTRUCTION DOCUMENTS AND SHALL GOVERN THE WORK.
4. CONTRACTOR SHALL PROVIDE A JOB SITE FAX AND JOB SITE PHONE WHICH SHALL BE AVAILABLE FOR USE 24 HOURS EACH DAY.
5. PRIOR TO FINALIZING CONTRACT PRICES, CONTRACTOR SHALL BE RESPONSIBLE FOR REVIEWING AND COORDINATING ALL NOTED AND DRAWINGS TO INCLUDE ANY SUBCONTRACTORS REQUIREMENTS OR INFORMATION WHICH MAY NOT BE INDICATED ELSEWHERE IN THE CONSTRUCTION DOCUMENTS.
6. CONTRACTOR SHALL VERIFY ALL WORKS, DIMENSIONS AND DETAILS AND REPORT ANY DISCREPANCIES TO THE OWNER AND ARCHITECT PRIOR TO COMMENCING WORK. DURING CONSTRUCTION, THE OWNER AND ARCHITECT ARE TO BE ADVISED REGARDING ANY DISCREPANCIES IN MEASUREMENT, DIMENSION, LOCATION OR DETAILS PRIOR TO CONTRACTOR'S PROCEEDING WITH THAT PORTION OF THE WORK.
7. CONTRACTOR SHALL CONSULT REPRESENTATIVES OF LOCAL UTILITIES, INCLUDING GAS, WATER, POWER, TELEPHONE AND TV WHERE APPLICABLE CONCERNING LOCATIONS AND AVAILABILITY OF UTILITIES PRIOR TO COMMENCING WORK OR CONNECTING UTILITIES, AND SHALL BE RESPONSIBLE FOR ANY DAMAGE TO EXISTING UTILITY LINES.
8. CONTRACTOR SHALL VERIFY ON SITE THE LOCATIONS, DEPTH AND ELEVATIONS OF ALL EXISTING UTILITIES AND DRAINAGE FACILITIES BEFORE WORK. WORK SHALL ALSO INCLUDE ALL SITE WORK AND UTILITY HOOKUPS AS CONDITIONS REQUIRE. CONTRACTOR SHALL RECORD LOCATIONS AND ELEVATIONS OF ALL EXISTING AND NEW UTILITY LINES, MAINS, AND METERS ON SITE PLAN SEPIA AND DELIVER TO ARCHITECT ON COMPLETION OF CONSTRUCTION.
9. THESE CONSTRUCTION DOCUMENTS ARE BASED ON OBSERVATION AND DOCUMENTATION OF EXISTING CONDITIONS BY THE ARCHITECT, SURVEYOR, AND/ OR FROM DOCUMENTS PROVIDED BY THE OWNER. THE ARCHITECT MAKES NO CLAIM TO THE ACCURACY OF SUCH OBSERVATIONS. SHOULD THE CONTRACTOR ENCOUNTER FIELD CONDITIONS WHICH VARY FROM THESE CONSTRUCTION DOCUMENTS AND WHICH AFFECT THE EXISTING FIRE DRAWINGS OR THE CONTRACT SUM, THE ARCHITECT SHALL BE NOTIFIED IMMEDIATELY. CONTRACTOR SHALL VISIT THE SITE AND VERIFY ALL CONDITIONS, DIMENSIONS AND ELEVATIONS AND REPORT ALL DISCREPANCIES TO THE ARCHITECT BEFORE THE COMMENCEMENT OF WORK. IT IS THE CONTRACTOR'S FAILURE TO REPORT ANY SUCH DISCREPANCIES TO THE ARCHITECT THE COST OF ANY CORRECTIVE WORK WHICH RESULTS FROM THIS FAILURE SHALL BE PAID FOR BY THE CONTRACTOR AT NO COST TO THE OWNER AND/ OR ARCHITECT.
10. WRITTEN DIMENSIONS SHALL PREVAIL OVER SCALED DIMENSIONS ON DRAWINGS. IN NO EVENT IS ANY DIMENSION SUPPLEMENTAL DRAWINGS OR SHOP DRAWINGS WITHOUT PRIOR APPROVALS FROM ARCHITECT. CONTRACTOR/ SUBCONTRACTORS SHALL BE HELD RESPONSIBLE FOR HIS/THEIR WORK. ALL DIMENSIONS SHALL BE FIELD VERIFY WHERE POSSIBLE. ALL DIMENSIONS ARE TO FACE OF STUD/ FACE OF CONCRETE WALL UNLESS OTHERWISE INDICATED.
11. DETAILS ARE INTENDED TO SHOW FINAL EFFECT OF PARTS OF CONSTRUCTION. MINOR MODIFICATIONS MAY BE REQUIRED TO SUIT PARTICULAR JOB SITE DIMENSIONS OR CONDITIONS AND SHALL BE INCLUDED WITHIN THE SCOPE OF THE WORK AND CONSTRUCTION CONTRACT. ANY MODIFICATIONS REQUIRED IN DETAILS ARE TO BE FIRST REVIEWED AND APPROVED WITH THE ARCHITECT BEFORE CONSTRUCTION.
12. CONTRACTOR SHALL KEEP PREMISES SECURE, CLEAN AND HAZARD FREE. CONTRACTOR SHALL BE RESPONSIBLE FOR MAINTAINING HIS EQUIPMENT, MATERIALS, AND WORK IN NEAT, CLEAN, ORDERLY, AND SAFE CONDITION AT ALL TIMES.
13. CONTRACTOR SHALL PROVIDE AND MAINTAIN TEMPORARY BARRICADES, WATERPROOFING, AND DUST PARTITIONS AS NEEDED FOR PROTECTION AGAINST ACCIDENT, AND SHALL CONTINUOUSLY MAINTAIN ADEQUATE PROTECTION OF HIS WORK AND THE OWNER'S PROPERTY FROM DAMAGE OR LOSS ARISING IN CONNECTION WITH CONSTRUCTION TRADES AND WORK. CONTRACTOR SHALL MAKE GOOD ANY DAMAGE OR LOSS REQUIRED TO PERFORM ALL WORK NECESSARY, INDICATED, REASONABLE INFERRED, OR REQUIRED BY ANY CODE WITH JURISDICTION TO COMPLETE THEIR SCOPE OF WORK FOR A COMPLETED AND PROPERLY JOB USING ONLY NEW MATERIALS IN ACCORDANCE WITH THE BEST ACCEPTED STANDARDS OF WORKMANSHIP. ALL F.B.O (FURNISHED BY OWNER) THE CONTRACTOR SHALL BE RESPONSIBLE FOR THE ACCURACY OF THE BUILDING LINES, BUILDING AND SITE ELEVATIONS, AND LEVELS. THE CONTRACTOR SHALL COMPARE CAREFULLY THE LINES, ELEVATIONS, AND LEVELS SHOW ON THE DRAWINGS WITH EXISTING LEVELS, GRADES AND ELEVATIONS FOR THE LOCATION AND CONSTRUCTION OF THE WORK AND SHALL BE RESPONSIBLE FOR THE CORRECT RELATIONS OF THE SAME BEFORE PROCEEDING WITH THE WORK. SHOP AND FIELD WORK SHALL BE PERFORMED BY MECHANICS, CRAFTSMEN, AND WORKER'S SKILLED AND EXPERIENCED AND LICENSED IN THE FABRICATION AND INSTALLATION OF THE WORK INVOLVED. ALL WORK ON THIS PROJECT SHALL BE PERFORMED IN ACCORDANCE WITH THE BEST ACCEPTED PRACTICES AND STANDARDS OF THE VARIOUS TRADES INVOLVED. IN CONFLICT WITH THE DRAWINGS, REVIEWED SHOP DRAWINGS, STANDARDS, RECOMMENDATIONS ESTABLISHED BY APPLICABLE TRADE ASSOCIATIONS, AND THESE SPECIFICATIONS. THE ARCHITECT RESERVES THE RIGHT T

6. ALL BUILT UP ROOF AREAS SHALL HAVE MIN. 1/4" PER FOOT PITCH TO DRAINS FOR SPANS UP TO 20'-0". EMERGENCY OVERFLOW SCUPPERS OR DRAINS SHALL BE INSTALLED WITH OUTLETS 2" ABOVE PRINCIPAL ROOF DRAINS, AND SHALL BE INDEPENDENT OF PRINCIPAL ROOF DRAINS OR GUTTERS PER U.B.C.
7. UNLESS OTHERWISE NOTED, ALL ROOF AREA DRAINS SHALL BE LARGE LOW PROFILE CAST IRON GENERAL PURPOSED DRAINS WITH REMOVABLE PERFORATED DOMES TO PROTECT AGAINST CLOGGING, AND SHALL BE INSTALLED WITH THE RECOMMENDED FLASHING. USE SIDE OUTLET TYPE WHERE CEILING CLEARANCE REQUIRES IT. PERFORATED DOMES SHALL BE FINE ENOUGH TO PREVENT ROOF GRAVEL FROM ENTERING DRAIN.
8. ALL ROOF FLASHING AND SHEET METAL SHALL BE 24 GAUGE GALVANIZED (G90) & BONDERIZED MATERIAL. ALL FLASHING CONCEALED BEHIND OR IN CONTACT WITH STONE SHALL BE 24 GAUGE GALVANIZED (G90) & BONDERIZED MATERIAL.
9. ALL ROOF, PARAPET, CHIMNEY AND OTHER FLASHINGS SHALL BE INSTALLED SO THAT THEY ARE WATER TIGHT. NOTIFY ARCHITECT OF ANY POINTS WHERE WATER OR MOISTURE MAY PENETRATE FOR ANY ADDITIONAL WATER PROTECTIVE MEASURES. PARAPET COPING CAPS SHALL BE INSTALLED SO AS TO BE CONTINUOUS AND LEVEL, WITH WELDED SEAMS, AND SHALL BE INSTALLED TO SLOPE A MINIMUM OF 1/2" PER FOOT TOWARDS THE ROOF SIDE. UNLESS SPECIFIED, SHEET METAL GAUGE SHALL BE SUFFICIENT TO WITHSTAND DENTING OR BENDING. DO NOT NAIL THROUGH HORIZONTAL SURFACES.
10. ALL COPINGS, SCUPPERS, GUTTERS, DOWN SPOUTS, LEADER BOXES OR OTHER SHEET METAL WORK SHALL BE PROPERLY FLASHED AND SHALL HAVE WELDED OR SEALED WATERPROOF JOINTS. ALL BENDS, SEAMS, SPLICES OR OTHER CONNECTIONS SHALL BE STRAIGHT, SMOOTH AND CONTINUOUS WITHOUT DIMPLES OR DENTS. UNLESS SPECIFIED, SHEET METAL GAUGE SHALL BE SUFFICIENT TO WITHSTAND DENTING OR BENDING.
11. PROVIDE GALVANIZED AND BITUMINOUS INSULATION BETWEEN DISSIMILAR METALS.
12. UNLESS OTHERWISE NOTED, ALL CONCEALED INTERIOR ROOF DRAIN DOWN SPOUTS SHALL BE CAST IRON, MIN. 4" DIAMETER OR LARGER AS SPECIFIED SUFFICIENT TO HANDLE ROOF AREAS. ALL CONNECTIONS SHALL BE WATER TIGHT. NO PVC PIPING SHALL BE ALLOWED IN HOUSE.
13. ALL ROOF DRAINAGE SHALL BE CARRIED TO THE STREET OR OTHER CODE APPROVED DRAINAGE AREA VIA NON-EROSIVE DEVICES AS REQUIRED BY CODE. AT BASE OF ALL EXTERIOR DOWN SPOUTS PROVIDE MINIMUM 4" DIAMETER PVC SCHEDULE 40 LINES UNDERGROUND TO STREET, ROADWAY OR A DRAINAGE SWALE. VERIFY LAYOUT WITH ARCHITECT PRIOR TO INSTALLING. SEE UTILITIES SECTION FOR ADDITIONAL INFORMATION REGARDING APPLICATIONS.
14. ALL EXTERIOR CAULKING SHALL BE HIGHEST QUALITY EXTERIOR GRADE SILICON CAULK RECOMMENDED FOR EXTREME TEMPERATURE VARIATION. CONFIRM COLOR WITH ARCHITECT FOR SPECIFIC APPLICATIONS.

F. ENERGY / INSULATION: CALIFORNIA STATE DESIGN STANDARDS

1. ALL NEW AND EXISTING EXTERIOR WALL THAT ARE OPENED DURING THE COURSE OF CONSTRUCTION SHALL BE INSULATED WITH BLANKET TYPE MINERAL OR GLASS FIBER INSULATION CONFORMING TO FEDERAL SPECIFICATION ASTM C-665, TYPE 11, CLASS C FOR KRAFT-FACED THERMAL BATTS, WITH A MINIMUM THERMAL RESISTANCE OF NOT LESS THAN R-13.
2. ALL NEW CEILINGS AND ATTICS SHALL BE INSULATED WITH BLANKET TYPE MINERAL OR GLASS FIBER INSULATION CONFORMING TO FEDERAL SPECIFICATION ASTM C-665, TYPE 11, CLASS C FOR KRAFT-FACED THERMAL RESISTANCE OF NOT LESS THAN R-19.
3. INSULATION THICKNESS AND THERMAL RESISTANCE SHALL CONFORM TO TITLE 24 REGULATIONS FOR CLIMATE ZONE OF JOB SITE. CONFIRM INSULATION TYPE AND THICKNESS WITH OWNER AND ARCHITECT PRIOR TO FINALIZING GENERAL CONSTRUCTION CONTRACT.
4. BUILDINGS LOCATED IN CLIMATE ZONES 1, 14 AND 16 SHALL BE PROVIDED WITH VAPOR BARRIERS. SWINGING DOORS OR WINDOWS TO THE EXTERIOR OR UNCONDITIONED SPACES SUCH AS GARAGES SHALL BE FULLY WEATHER-STRIPPED AND GASKETED TO LIMIT AIR INFILTRATION.
5. ANY OPERABLE GLASS DOORS OR WINDOWS SHALL BE CERTIFIED AND LABELED TO SHOW CONFORMANCE WITH AIR INFILTRATION STANDARDS FOR 1972 AMERICAN NATIONAL STANDARDS INSTITUTE (A134.1, A134.2, A134.3, A134.4) WHEN TESTED PRESSURE DIFFERENTIAL OF 1.57, 16FT2. AS PER ASTM E283-73. CONFIRM TYPE OF WEATHER STRIPPING AND SPECIFICATIONS WITH ARCHITECT PRIOR TO FINALIZING CONSTRUCTION CONTRACT AND SUBCONTRACTS.
6. ALL CONTINUOUSLY CIRCULATING DOMESTIC HEATING OR HOT WATER PIPING SHALL BE INSULATED AS REQUIRED BY THE PLUMBING DIVISION.
7. A CERTIFICATE OF COMPLIANCE (AVAILABLE AT BUILDING DEPARTMENT OFFICE) SHALL BE SIGNED BY THE INSULATION CONTRACTOR, CERTIFYING CONFORMANCE WITH CURRENT ENERGY REGULATION: CALIFORNIA ADMINISTRATIVE CODE, TITLE 24, STATE OF CALIFORNIA. CERTIFICATE SHALL BE PROMINENTLY POSTED ON THE SITE.
8. THE BUILDING DESIGN MEETS THE REQUIREMENTS OF TITLE 24, PART 2, CHAPTER 2-53. ALL NSULATION MATERIALS SHALL BE CERTIFIED BY THE MANUFACTURER AS COMPLYING WITH THE CALIFORNIA QUALITY STANDARDS FOR INSULATING MATERIAL.
9. ALL FAN SYSTEMS EXHAUSTING AIR FROM THE BUILDING SHALL BE PROVIDED WITH BACK DRAFT DAMPERS.
10. CAULK AROUND ALL PLUMBING, ELECTRICAL AND OTHER PENETRATIONS INTO THE BUILDING ENVELOPE.
11. NEW MASONRY AND FACTORY BUILT FIREPLACES SHALL HAVE THE FOLLOWING:
    A. TIGHT FITTING CLOSING METAL OR GLASS DOORS COVERING THE ENTIRE OPENING OF THE FIREBOX.
    B. A COMBUSTON AIR INTAKE, TO DRAW AIR FROM THE OUTSIDE OF THE BUILDING DIRECTLY INTO THE FIREBOX, WHICH IS AT LEAST SIX SQUARE INCHES IN AREA AND IS EQUIPPED WITH A READILY ACCESSIBLE, OPERABLE AND TIGHT FITTING DAMPERS.
    C. TIGHT FITTING FLUE DAMPER WITH READILY ACCESSIBLE CONTROL.
    D. CONTINUOUS BURNING PILOT LIGHTS ARE PROHIBITED.
12. DUCTS SHALL BE CONSTRUCTED, INSTALLED AND INSULATED ACCORDING TO CHAPTER 10 OF THE LATEST EDITION OF THE UNIFORM MECHANICAL CODE. ALL PARTS OF THE DUCT SYSTEM SHALL BE TIGHTLY SEALED WITH MASTIC OR TAPE.
13. GAS FIRED HOUSEHOLD HEATING AND COOLING APPLIANCES AND ALL PLUMBING FIXTURES SHALL COMPLY WITH EFFICIENCY STANDARDS.
14. GENERAL LIGHTING IN KITCHEN AND BATHROOMS SHALL HAVE AN EFFICIENCY OF NOT LESS THAN 25 LUMENS/ WATTS.
15. THERMOSTATIC ALLY CONTROLLED HEATING OR COOLING SYSTEMS (EXCEPT HEATING PUMPS) SHALL HAVE AN AUTOMATIC THERMOSTAT WITH A CLOCK MECHANISM WHICH CAN BE MANUALLY PROGRAMMED TO AUTOMATICALLY SET BACK THE THERMOSTAT SET POINTS FOR AT LEAST TWO PERIODS WITHIN 24 HOURS. ALSO SEE MECHANICAL NOTES.

G. DOORS & WINDOWS

1. PRIOR TO INSTALLATION, ALL PAINTED WOOD DOOR AND WINDOW FRAMES SHALL BE PRIMED WITH AN APPROVED PRIMER COMPATIBLE WITH FINISH PAINT SPECIFICATIONS, INCLUDING BACK SIDES OF FRAMES, FRAME BUCKS AND END GRAIN CUTS. STAINED WOOD FRAMES SHALL BE BACK-PRIMED SO AS NOT TO SHOW IN FINISH.
2. GLASS DOORS, ADJACENT GLASS PANELS WITHIN 24" OF DOORS, AND ALL GLAZED OPENINGS WITHIN 18" OF THE ADJACENT FLOOR OR LANDING SHALL BE OF GLASS APPROVED FOR IMPACT HAZARD.
3. ALL GLASS USED FOR GLAZING EXTERIOR OPENINGS SHALL BE LIMITED IN AREA AND THICKNESS SHOWN BY TABLE NO. 17-C AND AS MODIFIED BY TABLE NO. 17-D OF THE BUILDING CODE. EXCEPTIONS NOS. 1, 2 AND 3 OF SECTION 91.1711 (A) ARE NOT APPLICABLE IN A "HIGH WIND VELOCITY" AREA.
4. ALL OPENINGS IN EXTERIOR WALLS, INCLUDING WINDOWS AND DOORS, SHALL COMPLY WITH SPECIFICATIONS FOR SECURITY OPENINGS; SEE SECURITY NOTES AND DOOR AND WINDOW SCHEDULES FOR ADDITIONAL INFORMATION.
5. ALL EXTERIOR AND INTERIOR DOORS SHALL BE INSTALLED WITH 1-1/2 PAIR OF HINGES UNLESS NOTED OTHERWISE. VERIFY HINGE TYPE AND FINISH WITH ARCHITECT PRIOR TO ORDERING.
6. EXTERIOR WOOD DOOR SILLS SHALL BE TEAK, OR STONE UNLESS NOTED OR DETAILED OTHERWISE.
7. ALL EXTERIOR DOORS SHALL BE WEATHER-STRIPPED AT HEADS, JAMBS, AND MEETING STILES SHALL BE PROVIDED WITH EXTRUDED BRONZE INTERLOCKING THRESHOLDS WITH CONCEALED BRONZE HOOKS AND RAIN DRIPS. WEATHER-STRIPPING SHALL BE PEMKO OR EQUAL AS APPROVED BY ARCHITECT. SEE ENERGY SECTION FOR ADDITIONAL INFORMATION REGARDING WEATHER-STRIPPING, ETC. FOR ALL OPENINGS MARKED AS SECURITY OPENINGS ON THE DOOR AND WINDOW SCHEDULES, THE FOLLOWING SHALL APPLY:
    A. DOOR STOPS OF IN-SWINGING DOORS SHALL BE OF ONE-PIECE CONSTRUCTION WITH THE JAMB.
    B. ALL PIN-TYPE HINGES WHICH ARE ACCESSIBLE FROM OUTSIDE THE SECURED AREA WHEN THE DOOR IS CLOSED SHALL HAVE A NON-REMOVABLE HINGE PINS. IN ADDITION THEY SHALL HAVE MIN. 1/4" STEEL JAMB WITH 1/4" MIN. PROJECTION.
    C. THE STRIKE PLATE FOR LATCHES & THE HOLDING DEVICE FOR PROJECTING DEAD BOLTS SHALL BE SECURED TO THE JAMB & WALL FRAMING WITH 2 1/2" LONG SCREWS.
    D. UNLESS NOTED OTHERWISE, ALL EXTERIOR DOORS SHALL BE FLUSH-TYPE DOORS, 1 3/4" THICK, WITH SOLID CORE CONSTRUCTION, & SHALL BE INSTALLED WITH DEAD LOCKING LATCHES. DEAD BOLTS SHALL HAVE MIN. 1" THROW MIN. 5/8" EMBEDMENT, STRAIGHT TYPE, & SHALL CONTAIN HARDENED INSERTS. LOCKS SHALL BE FLUSH KEY-OPERATED CYLINDERS ON EXTERIOR, & SHALL BE OPERABLE WITHOUT KEY, SPECIAL KNOWLEDGE OR SPECIAL EFFORT ON INTERIOR
    E. CYLINDER GUARDS SHALL BE INSTALLED ON ALL CYLINDER LOCKS WHENEVER THE CYLINDER PROJECTS BEYOND THE FACE OF THE DOOR OR IS OTHERWISE ACCESSIBLE TO GRIPPING TOOLS.
    F. GLASS DOORS SHALL HAVE FULLY TEMPERED GLASS COMPLYING WITH LOCAL CODE.

H. SECURITY NOTES

1. SLIDING GLASS DOORS:
    A. SHALL HAVE FULLY TEMPERED GLASS COMPLYING WITH LOCAL CODE.
    B. SHALL BE EQUIPPED WITH LOCKING DEVICES AND SHALL BE SO CONSTRUCTED AND INSTALLED THAT THEY REMAIN INTACT AND ENGAGED WHEN SUBJECTED TO THE TESTS SPECIFIED BY LOCAL CODE.
    C. SHALL BE PROVIDED WITH A DEVICE IN THE UPPER CHANNEL OF THE MOVING PANEL TO PROHIBIT RAISING AND REMOVING OF THE MOVING PANEL IN THE CLOSED OR PARTIALLY OPEN POSITION.
2. ALL OPERABLE WINDOWS SHALL BE PROVIDED WITH SUBSTANTIAL LOCKING DEVICES.

I. FINISHES. CABINETRY. RAILING. ETC.

1. ALL SURFACES TO BE CLEAN, DRY, SMOOTH AND DUST FREE BEFORE APPLICATION OF ANY MATERIAL. CONTRACTOR SHALL VERIFY CONDITION OF SUBSTRATE AND ITS SUITABILITY TO RECEIVE FINISH MATERIAL / COVER. WELDING SHALL BE DONE BY WELDERS CERTIFIED BY THE COUNTY OF MARIN BUILDING DEPARTMENT. EXTERIOR AND INTERIOR WALL INSULATION SHALL BE INCOMBUSTIBLE. CONTRACTOR SHALL PROVIDE ACCESS PANELS AS OR REQUIRED BY THE PLUMBING, HVAC, AND OTHER INSTALLATIONS, AND AS REQUIRED BY CODE. ACCESS PANEL TYPE, FINISH AND LOCATION SHALL BE APPROVED BY ARCHITECT PRIOR TO FABRICATION AND INSTALLATION. PROVIDE SEISMIC RESTRAINTS FOR ALL MECHANICAL EQUIPMENT COMPLYING WITH CODE.
2. CONTRACTOR SHALL SUBMIT ARCHITECTURAL SAMPLES FOR ARCHITECT'S AND OWNER'S REVIEW OF ALL FINAL FINISH MATERIALS, PAINT AND STAINS PRIOR TO ORDERING MATERIALS.

WINDOWS SEE SCHEDULE:

DRYWALL/INTERIOR PLASTER:

3. UNLESS NOTED OTHERWISE, ALL PLASTER AND DRYWALL MATERIALS AND INSTALLATION SHALL BE ACCORDING TO CURRENT US GYPSUM HANDBOOK SPECIFICATIONS AND APPLICABLE CODE EQUIREMENTS. USE WATERPROOF DRYWALL IN ALL BATHROOMS, KITCHENS, JANITOR CLOSETS AND WET AREAS. STANDARD DRYWALL INSTALLATIONS: BLOCK ALL PANEL EDGES AND USE DRYWALL SCREWS FOR ALL PANEL INTERIOR (FIELD) FASTENING. ALL CORNER BEADS AND EDGE TRIM SHALL BE SET LEVEL OR PLUMB, STRAIGHT AND TRUE AND CHECKED PRIOR TO TAPING. GO OVER TAPING AS MANY TIMES AS NECESSARY TO OBTAIN AN EVENN FINISH PRIOR TO APPLYING SKIM COAT. APPLY SKIM COAT AND FINNISH SMOOTH. NO TAPE JOINTS OR SCREW LOCATIONS SHALL BE VISIBLE. WHEN COMPLETELY DRY, ROLL ON PAINT PRIMER COAT (DO NOT BRUSH OR SPRAY), THEN SAND LIGHTLY TO SMOOTH FINISH, TOUCH UP DRYWALL AS REQUIRED WITH SPOT PRIME TOUCHUP MATERIAL USING FINAL PAINT COATS.
4. GYPSUM WALL BOARD SHALL BE 5/8" THICKNESS UNLESS OTHERWISE NOTED AND TYPE X FIRE RESISTANT GYPSUM BOARD WHERE REQUIRED BY THE APPLICABLE FIRE BUILDING CODES. GREEN BOARD WHERE REQUIRED BY CODE.
5. INTERIOR 2-COAT GYPSUM WALLBOARD VENEER COAT INSTALLATIONS SHALL BE ACCORDING TO U.S. GYPSUM "IMPERIAL VENEER SYSTEM", 5/8" BASE BOARD PLUS 2-COAT "IMPERIAL" VENEER PLASTER, SMOOTH FINISH.
7. INTERIOR PLASTER SHALL BE MINIMUM 2-COAT APPLICATION OVER 3/8" GYPSUM LATH BOARD. CONFIRM FINISH WITH ARCHITECT PRIOR TO STARTING WORK. USE KEENE'S CEMENT PLASTER AT ALL BATHROOM AND WET AREAS.

CERAMIC TILE / STONE:

8. MARBLE OR GRANITE WORK SHALL BE IN ACCORDANCE WITH THE MASONRY INSTITUTE OF AMERICAN AND BUILDING STONE INSTITUTE GUIDELINES. VERIFY ALL CORNER, EDGE, SPLASH, AND OTHER DETAILS WITH ARCHITECT PRIOR TO STARTING CONSTRUCTION.
9. ALL CERAMIC, MARBLE, GRANITE, SLATE OR OTHER TILE WORK SHALL BE ACCORDING TO CURRENT STANDARDS AND SPECIFICATIONS OF THE TILE COUNCIL OF AMERICA AND CERAMIC TILE INSTITUTE. VERIFY ALL LAYOUTS, TRIM SHAPES, GROUT SELECTIONS AND WIDTH, AND OTHER SPECIFICATIONS WITH ARCHITECT PRIOR TO ORDERING TILE.
10. UNLESS OTHERWISE SPECIFIED, TILE SHALL BE INSTALLED ON A WIRE-REINFORCED MORTAR BED OVER A CLEAVAGE MEMBRANE. ALL DUST SHALL BE COMPLETELY WASHED OFF TILE PRIOR TO APPLICATION OF THE BOND COAT. BONDING MORTAR SHALL COVER 100% OF BOTH THE TILE AND THE SURFACE TO BE COLORED APPROXIMATELY 1/8" THICK. ON MARBLE TILE, USE GRAY BONDING MORTAR WITH DARKER TILE. WHILE BONDING MORTAR WITH LIGHT COLORED TILE.
11. THE USE OF GYPSUM BOARD FOR TILED WALLS OR CEILINGS IN SHOWERS AND OTHER WET AREAS IS PROHIBITED, EVEN FOR BACKING.
12. THE USE OF WONDER BOARD OR DUROCK WILL BE ACCEPTABLE FOR TILE SETTING BED BACKING ONLY, AND ONLY WITH ARCHITECT'S WRITTEN APPROVAL AND IF A WATERPROOF MEMBRANE IS INSTALLED BEHIND BOARD OVER STUDS. USE FULL SHEETS WHEREVER POSSIBLE TO ELIMINATE JOINTS. APPLY MIN. 1/2" THICK MORTAR BED PLUS 1/8" BONDING OVER BACKING SURFACES.
13. INSTALLATION OF QUARRY OR CLAY TILE, BRICK OR OTHER CERAMIC OR MASONRY PRODUCTS SHALL USE A MAX. OF .6% BY WEIGHT LOW ALKALI SULFATE CEMENT MORTAR WITH CLEAN WASHED SAND AND ALKALI SULFATE-FREE WATER TO CONTROL EFFLORESCENCE. CONTRACTOR SHALL REQUIRE TILE OR BRICK MANUFACTURER TO WICK TEST AND CERTIFY IN WRITING TO ARCHITECT THAT MATERIAL IS NON CONTRIBUTING.
14. CONTRACTOR SHALL BE RESPONSIBLE FOR ORDERING ALL CERAMIC TILE AND OTHER FINISH MATERIALS WITH ENOUGH LEAD TIME SO THAT ORDERED MATERIAL CAN BE CONFIRMED AS ACCEPTABLE, AND ANY UNACCEPTABLE MATERIAL REPLACED, WITHOUT DELAYING CONSTRUCTION.
15. FINISH CAULKING FOR TUBS, COUNTERS, AND OTHER ITEMS SHALL BE COLOR-MATCHED SILICON LATEX CAULK.
16. ALL SHEET VINYL OR VINYL TILE FLOORS SHALL BE PREPARED WITH THE INSTALLATION OF A SMOOTH HARDWOOD VENEER PLYWOOD UNDERLAYMENT, MINIMUM 1/4" THICK, WATERPROOF GLUE. ALL BUMPS, PROTRUDING EDGES OR OTHER HIGH POINTS SHALL BE REMOVED OR SANDED SMOOTH, AND ALL HOLES, CRACKS AND DEPRESSIONS SHALL BE FILLED SO THAT THERE IS NO APPARENT UNEVENNESS TO THE FINISHED FLOOR. WHERE REQUIRED, INSTALL ADDITIONAL PLYWOOD UNDERLAYMENT AS NECESSARY BETWEEN FINISH 1/4" UNDERLAYMENT AND STRUCTURAL SUB FLOOR SO FINISH VINYL FLOOR IS FLUSH WITH ADJACENT FINISH FLOORING.
17. HARDWOOD FOR FLOORS SHALL BE TOP GRADE KILN DRIED MATERIAL, DELIVERED TO THE JOB SITE AND ALLOWED TO ACCIMATIZE INSIDE THE FINISHED HEATED OR AIR CONDITIONED SPACE FOR AT LEAST TWO WEEKS PRIOR TO INSTALLATION. HARDWOOD FLOORS SHALL BE INSTALLED OVER A MEMBRANE LAYER OF ROSIN SIZED (PINK) PAPER OVER PLYWOOD SUBFLOOR. DO NOT USE FELT OR ASPHALT PAPER. GENERAL CONTRACTOR AND FLOORING CONTRACTOR SHALL CONFIRM INSTALLATION AND FINISHING SPECIFICATIONS WITH ARCHITECT PRIOR TO ORDERING MATERIAL.

OTHER FINISH ITEMS:

18. FLOOR FINISH TO BE APPROVED BY OWNER AND ARCHITECT FROM SAMPLES SUBMITTED BY GENERAL CONTRACTOR.
19. ALL CABINETRY AND MILL WORK SHALL BE ACCORDING TO CURRENT WOODWORKERS INSTITUTE OF CALIFORNIA HANDBOOK STANDARDS, CUSTOM GRADE. ALL DRAWERS AND SLIDING UNITS TO BE INSTALLED WITH FULL EXTENSION ACCURIDE # 4037 (24" MAXIMUM WIDTH) AND #4025 (42" MAXIMUM WIDTH) GUIDES OR EQUAL AS APPROVED BY ARCHITECT. CONFIRM CABINET STYLE, CONSTRUCTION TYPE, HINGES AND HARDWARE WITH ARCHITECT PRIOR TO FINALIZING CONSTRUCTION CONTRACT. CABINET SUBCONTRACTOR SHALL SUBMIT DETAILED SHOP DRAWINGS OF ALL CABINETS, COUNTERS, AND OTHER BUILT-IN CABINETRY TO ARCHITECT FOR REVIEW. A SAMPLE CABINET FRONT SHALL BE PROVIDED FOR OWNER'S AND ARCHITECT'S REVIEW PRIOR TO MANUFACTURING CABINETS. INSTALL PAIRS OF SMALLCLEAR RUBBER CUSHIONS INSIDE ALL DOORS AND DRAWER FRONTS FOLLOWING CABINET INSTALLATION.
20. ALL CUSTOM RUN WOOD MOLDINGS, PANELING AND OTHER MILLWORK SHALL BE TESTED BEFORE, DURING AND AFTER MILLING SO THE PROPER MOISTURE CONTENT (DRYNESS) IS CONSISTENTLY MAINTAINED.
21. CONTRACTOR SHALL INCLUDE IN CONSTRUCTION CONTRACT INSTALLATION OF ALL FINISH HARDWARE, INCLUDING BUT NOT LIMITED TO CABINET PULL, KNOBS, DOOR STOPS, TOWEL BARS, TOILET PAPER HOLDERS AND OTHER MISCELLANEOUS ITEMS, REGARDLESS OF WHETHER THESE ITEMS ARE SUPPLIED TO OWNER OR AN ALLOWANCE.
22. CONTRACTOR SHALL REVIEW RAILINGS AND RAILING DETAILS WITH ARCHITECT PRIOR TO FINALIZING CONTRACT. RAILING SUBCONTRACTOR SHALL SUBMIT SAMPLES AND DETAILED SHOP DRAWINGS FOR ARCHITECT'S REVIEW PRIOR TO MANUFACTURE.
23. INSTALL SPARK ARRESTORS AT TOPS OF ALL CHIMNEYS: MIN. 12 GA. WELDED WIRE WITH A MAX. OPENING OF 1/2" OR EQUAL. U.L. LISTED ASSEMBLY.

J.PAINTING

1. CONTRACTOR SHALL INCLUDE WITHIN THE SCOPE OF HIS WORK PREPARATION, PRIMING AND FINISHING PAINTING OF EXTERIOR WALLS AFFECTED BY ADDITIONS AND REMODELING AND INTERIOR WALLS AND CEILINGS, INCLUDING DOORS, SASH AND TRIM WORK. CONFIRM ANY EXPOSED BEAMS, DECKING, CABINETS OR WOOD TO BE STAINED AND OR CLEAR-SEALED PRIOR TO ORDERING. CONFIRM PAINT, STAIN AND FINISH SELECTIONS AND SPECIFICATIONS WITH ARCHITECT, SUBMIT COLOR SAMPLES AND APPLY SAMPLE COLORS ON ACTUAL SURFACES TO BE PAINTED FOR OWNER'S AND ARCHITECT'S REVIEW PRIOR TO ORDERING MATERIAL.
2. BEFORE BEGINNING, INSPECT ALL WORK TO BE PAINTED OR STAINED AND REPORT TO ARCHITECT ANY CONDITIONS WHICH WILL PREVENT A QUALITY FINISH FROM BEING ACCOMPLISHED. COMMENCING OF WORK BY THE CONTRACTOR INDICATES HIS ACCEPTANCE OF THE SURFACES.
3. ALL SPACES SHALL BE BROOM CLEAN, AND ALL SURFACES TO BE PAINTED SHALL BE DRY AND CLEAN.
4. ALL WOODWORK SHALL BE CLEANED, SANDED AND DUSTED BEFORE PAINTING. ALL WOODWORK SHALL BE SANDED LIGHTLY BETWEEN COATS.
5. AFTER PRIMING HAS DRIED, APPLY PIGMENTED WHITE SHELLAC TO ALL KNOTS, PITCH AND SAPWOOD: PUTTY ALL NAIL HOLES, CRACKS, OPEN JOINTS AND OTHER DEFECTED.
6. TOPS AND BOTTOMS OF ALL DOOR SHALL BE FULLY SEALED, AND PAINTED AFTER CUTTING AND PRIOR TO HANGING.
7. TO AVOID OVER PAINTING ON FINISHED HARDWARE, INCLUDING DOOR HINGES, ALL CABINETS, WOOD WINDOWS AND DOORS SHALL BE HUNG, COMPLETELY WEATHER-STRIPPED AND FITTED WITH LOCK SETS AND FINISH HARDWARE, THE ENTIRELY REMOVED AND STRIPPED OF HARDWARE FOR FINISH PAINTING AND OR STAINING. REMOVE ALL ELECTRIC PLATES, SURFACE HARDWARE, ETC., BEFORE PAINTING, PROTECT, AND REPLACE WHEN COMPLETED.
8. EXCEPT AS NOTED, ALL PAINT SHALL BE AS MANUFACTURED BY OR PRATT & LAMBERT APPROVED EQUAL. ALL MATERIAL SHALL ARRIVE AT THE JOB IN UNBROKEN CONTAINERS WITH MANUFACTURE'S LABEL CLEARLY VISIBLE. UNLESS OTHERWISE NOTED, ALL PAINTS SHALL BE APPLIED IN STRICT ACCORDANCE WITH MANUFACTURER'S SPECIFICATIONS AND RECOMMENDATIONS.
9. PAINTING COATS AS SPECIFIED ARE INTENDED TO COVER SURFACES COMPLETELY; IF NOT,FURTHER COATS SHALL BE APPLIED.
10. ALL EXTERIOR STAINS SHALL BE SIKKENS, MANDERS OR APPROVED EQUAL.
11. PRIOR TO SEALING INTERIOR PLASTER OR DRYWALL, CONTRACTOR SHALL VERIFY ANY SURFACES TO RECEIVE PAPER, AND SHALL OBTAIN WRITTEN APPROVAL OF THE SPECIFIC SEALER PRODUCT TO BE USED FROM THE PAPER MANUFACTURER AND HANGER.
12. NATURAL WOOD FINISH INTERIOR PANELING, CABINETS, DOORS AND OTHER WOODWORK SHALL BE STAINED, IF REQUIRED, AND FINISHED WITH A FLAT EGGSHELL LACQUER SANDING SEALER AS SPECIFIED BY ARCHITECT. ON SOFT WOODS, APPLY A COAT OF SANDING SEALER PRIOR TO STAINING. CONFIRM STAIN AND FINISH SELECTIONS WITH ARCHITECT AND PROVIDE FINISHED SAMPLE ON THE ACTUAL WOODS USED FOR ARCHITECT'S AND OWNER'S APPROVAL PRIOR TO STARTING WORK.
13. EXTERIOR CONCRETE MASONRY UNITS TO BE CLEAR SEALED SHALL BE SEALED WITH AN ASHFORD FORMULA PENETRATION SEALER AS APPROVED BY ARCHITECT.
15. PRIOR TO APPLICATION, CONTRACTOR SHALL ADVISE OWNER AND ARCHITECT OF ANY FINISHES, FACTORY OR SITE APPLIED, WHICH DO NOT OR CANNOT MEET HIGHEST QUALITY SPECIFICATION STANDARDS.

K. UTILITIES. PLUMBING. DRAINAGE. ETC.

1. GENERAL CONTRACTOR SHALL CONFIRM ARRANGEMENTS FOR ANY TEMPORARY POWER AND TELEPHONE SERVICE WITH OWNER PRIOR TO FINALIZING CONTRACT. SEE ELECTRICAL NOTES FOR ADDITIONAL NOTES. SEE ELECTRICAL PLANS FOR ELECTRICAL WORK.
2. EXCEPT AS PROVIDED BY ARCHITECT IN THE CONSTRUCTION DOCUMENTS, CONTRACTOR SHALL DESIGN, PREPARE NECESSARY PLANS, HAVE PLANS CHECKED AND OBTAIN BUILDING PERMITS FOR ALL PLUMBING SYSTEMS AND EQUIPMENT
3. CONTRACTOR SHALL REROUTE ANY EXISTING UTILITY LINES, CONDUITS OR EQUIPMENT IN CONFLICT WITH NEW CONSTRUCTION AND SHALL CONFIRM REROUTING WITH ARCHITECT, AND SHALL NOTE SUCH REROUTING ON THE RECORD DRAWINGS.
4. CONTRACTOR SHALL PROVIDE AND INSTALL NEW UNDERGROUND WATER AND GAS SUPPLY LINES AND VERIFY THAT METER, MAIN, TANK AND LINE SIZES ARE ADEQUATE TO PROVIDE ACCEPTABLE PRESSURE AND VOLUME TO ALL FIXTURES AND APPLIANCES.
5. ALL NEW WATER SUPPLY LINES SHALL BE COPPER AND ALL NEW AND ACCESSIBLE EXISTING HOT WATER LINES SHALL BE INSULATED WITH R-3 OR GREATER PIPE INSULATION WITH WATER SAVERS IF NOT SUBMITTED. WATER HEATER LINES SHALL BE CUSHIONED WHERE PENETRATION OR TANGENT TO WOOD FRAMING TO REDUCE SOUND.
6. ALL UNDERGROUND COPPER LINES SHALL BE TYPE L.
7. COPPER LINES SHALL HAVE ISOLATION COUPLINGS WHERE CONNECTING TO EXISTING GALVANIZED IRON OR STEEL PIPE WHICH CANNOT BE CHANGED TO COPPER.
8. MAIN WATER LINE TO DOMESTIC SYSTEMS SHALL BE INSTALLED WITH SEPARATE GATE VALVE AND PRESSURE REGULATOR AT HOUSE ENTRY POINT.
9. HOSE BIBBS AND IRRIGATION SYSTEMS SHALL BOTH BE CONNECTED TO BUILDING WATER SYSTEM, BUT SHALL BE FED FROM MAIN WATER LINE BEFORE BUILDING SYSTEM PRESSURE REGULATOR AND MAIN VALVE.
10. ALL HOT AND COLD SHOWER AND TUB SUPPLY LINES SHALL BE MINIMUM 1"
11. CONTRACTOR SHALL PROVIDE NEW MAIN UNDERGROUND SEWER LINES AND NEW WASTE LINES OF SUFFICIENT SIZE, INCLUDING ACCESSIBLE CLEAN OUTS AT CONNECTIONS, BENDS OR ELSEWHERE AS REQUIRED BY CODE.
12. STRAP ALL FIRE PLACE GAS LINES IN PLACE AND PRESSURE TEST FOR LEAKS, INCLUDING SECTION OF LINES FROM KEY VALVES TO LOG LIGHTERS, AND REPAIR ANY LEAKS PRIOR TO ENCLOSING WALLS. GAS LINE HOLES THROUGH FIREBOXES SHOULD BE GROUTED SOLID TO PREVENT PIPE MOVEMENT AND CLOSE ANY AIR LEAKAGE.
13. ALL SANITARY SEWER PIPING SHALL BE CAST IRON UNLESS OTHERWISE APPROVED BY ARCHITECT. PLASTIC DRAIN, WASTE OR VENT PIPE, WHERE PERMITTED, SHALL BE A.B.S. AS APPROVED PER ASTM STANDARD D2261-73. WASTE LINE INSIDE THE STRUCTURE ABOVE THE FIRST FLOOR LINE SHALL BE FULLY WRAPPED WITH INSULATION TO REDUCE SOUND.
14. CATCH BASINS SHALL BE INSTALLED WHERE INDICATED ON PLANS OR REQUIRED BY JOB SITE CONDITIONS, AND SHALL BE CONNECTED UNDERGROUND TO STREET OR STORM SEWER. CATCH BASINS SHALL BE CONCRETE AND PROVIDED WITH CAST IRON GRILLS.
15. UNLESS OTHERWISE NOTED OR REQUIRED BY CODE, ALL UNDERGROUND STORM DRAIN LINES SHALL BE PVC MIN. SCHEDULE 40 AND MIN. 4" DIAMETER OR GREATER AS REQUIRED TO HANDLE LOAD. ALL CONNECTIONS SHALL BE PROPERLY JOINED AND SEALED SO THAT THEY ARE WATER-TIGHT. SEE ROOF SECTION FOR ADDITIONAL INFO. REGARDING COORDINATING WITH ROOF DAMAGE.
16. LINE UNDER A PUBLIC SIDEWALK SHALL BE CAST IRON MIN. 4" DIAM., CONSTRUCTED PER PUBLIC WORKS REQUIREMENTS.
17. CONTRACTOR SHALL EXISTING PLUMBING PRIOR TO STARTING WORK, AND SHALL REPLACE ANY EXISTING PLUMBING IN POOR CONDITION, ADVISING OWNER OF EXTRA EXPENSE PRIOR TO DOING WORK.
18. FLUSH OUT ALL NEW AND OLD WATER SUPPLY LINES PRIOR TO CONNECTING FIXTURES.
19. CONTRACTOR SHALL MAINTAIN ADEQUATE AND CONSTANT WATER SUPPLY TO ALL EXISTING PLUMBING FIXTURES, HOSE BIBS AND SPRINKLER SYSTEMS DESIRED BY OWNER DURING CONSTRUCTION.
20. ALL NEW HOT WATER HEATERS SHALL BE A.O. SMITH, NAUTILUS OR EQUAL, C.E.C. CERTIFIED, RAPID RECOVERY, SIZED TO PROVIDE ADEQUATE VOLUME OF HOT WATER TO FIXTURES SERVED, AND INSTALLED ON SMITTY PANS WITH CONCEALED DRAINS

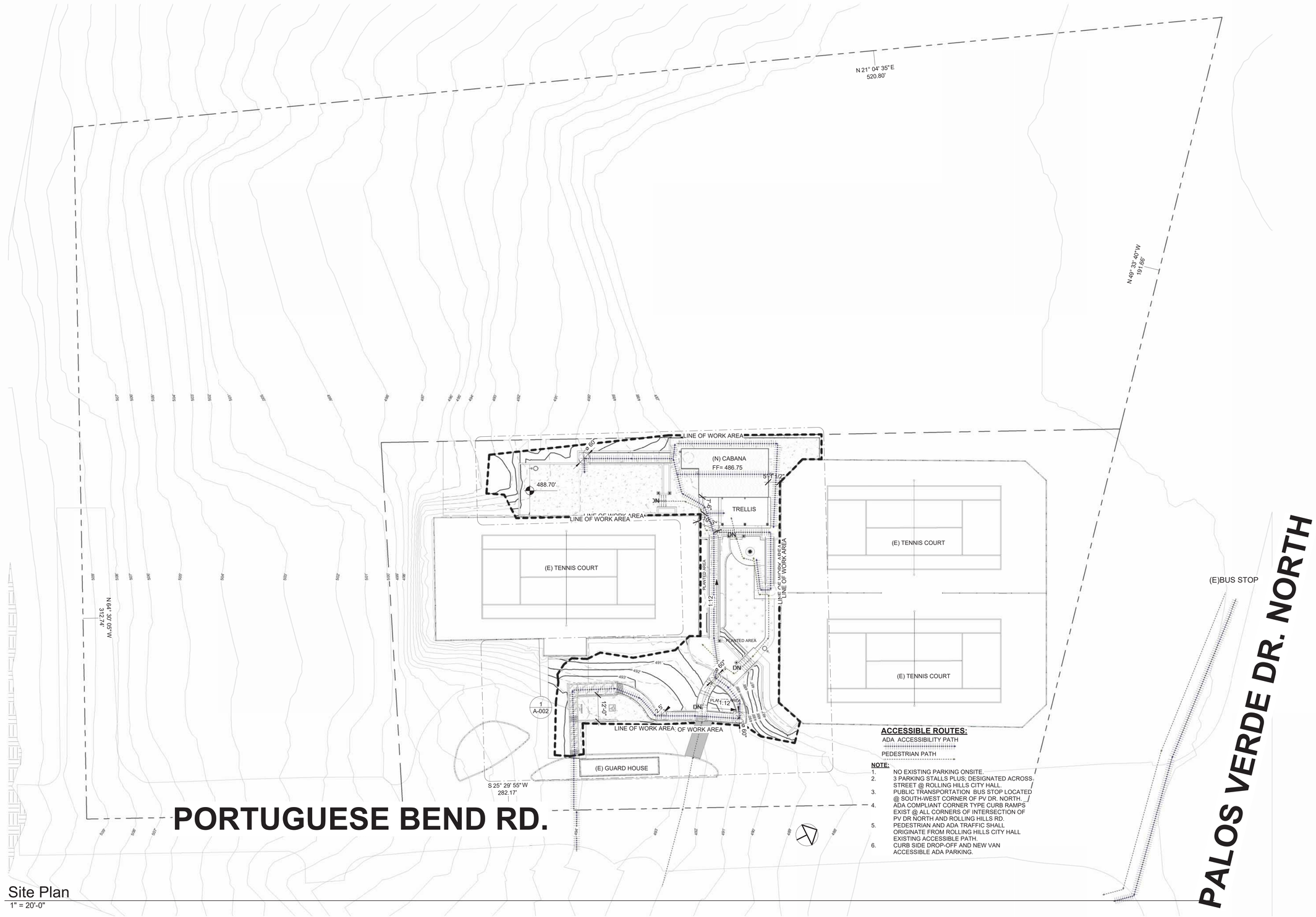

ACCESSIBLE ROUTES:

ADA ACCESSIBILITY PATH

PEDESTRIAN PATH

NOTE:

1. NO EXISTING PARKING ONSITE.
2. 3 PARKING STALLS PLUS; DESIGNATED ACROSS STREET @ ROLLING HILLS CITY HALL.
3. PUBLIC TRANSPORTATION BUS STOP LOCATED @ SOUTH-WEST CORNER OF PV DR. NORTH.
4. ADA COMPLIANT CORNER TYPE CURB RAMPS EXIST @ ALL CORNERS OF INTERSECTION OF PV DR NORTH AND ROLLING HILLS RD.
5. PEDESTRIAN AND ADA TRAFFIC SHALL ORIGINATE FROM ROLLING HILLS CITY HALL EXISTING ACCESSIBLE PATH.
6. CURB SIDE DROP-OFF AND NEW VAN ACCESSIBLE ADA PARKING.

Site Plan

1" = 20'-0"

OBELISK
ARCHITECTS
A Professional Corporation

3800 PACIFIC COAST HIGHWAY
TORRANCE, CALIFORNIA 90505
obeliskarc.com
310.373.0810 fax
310.373.3568 tel

PROJECT

Rolling Hills Community Association

#2 Portuguese Bend Road
Rolling Hills, Ca. 90274

REVISIONS

No.	Description	Date

BUILDING AND SAFETY DIVISION
Department of Public Works
APPROVED
UNDER LOS ANGELES COUNTY CODE
TITLES 26, 30 AND 31
PUBLIC WORKS
03/27/2024 2:05:07 PM
This set of plans and specifications shall be kept at the job site at all times and it is unlawful to make any changes, modifications or alterations to these plans or specifications without the prior written permission of the Building Official. The stamping of this set of plans and specifications SHALL NOT, under any circumstances, be deemed to permit or to be an approval of any work or activity that violates any provisions of any County Ordinance or State Law.

PROJECT NUMBER

Project Number

DATE

March 19, 2024

STAMP

REGISTERED PROFESSIONAL ARCHITECT
WAYNE R. BARROW
EXP 1-31-25
LIC# C26503
STATE OF CALIFORNIA

SHEET TITLE

Site Plan

THIS DOCUMENT IS FURNISHED IN CONFIDENCE FOR THE LIMITED PURPOSE OF EVALUATION, BIDDING OR REVIEW. THIS DOCUMENT AND ITS CONTENTS MAY NOT BE USED FOR ANY OTHER PURPOSE AND MAY NOT BE REPRODUCED OR DISCLOSED TO OTHERS WITHOUT THE PRIOR WRITTEN AUTHORIZED CONSENT OF OBELISK ARCHITECTS ALL RIGHTS RESERVED (C) 1997–2022

SHEET

A-001

3/19/2024 4:38:53 PM H:\Rolling Hills Cabana Project\REVIT FILES\CITY OF ROLLING HILLS COMMUNITY ASSOC.rvt

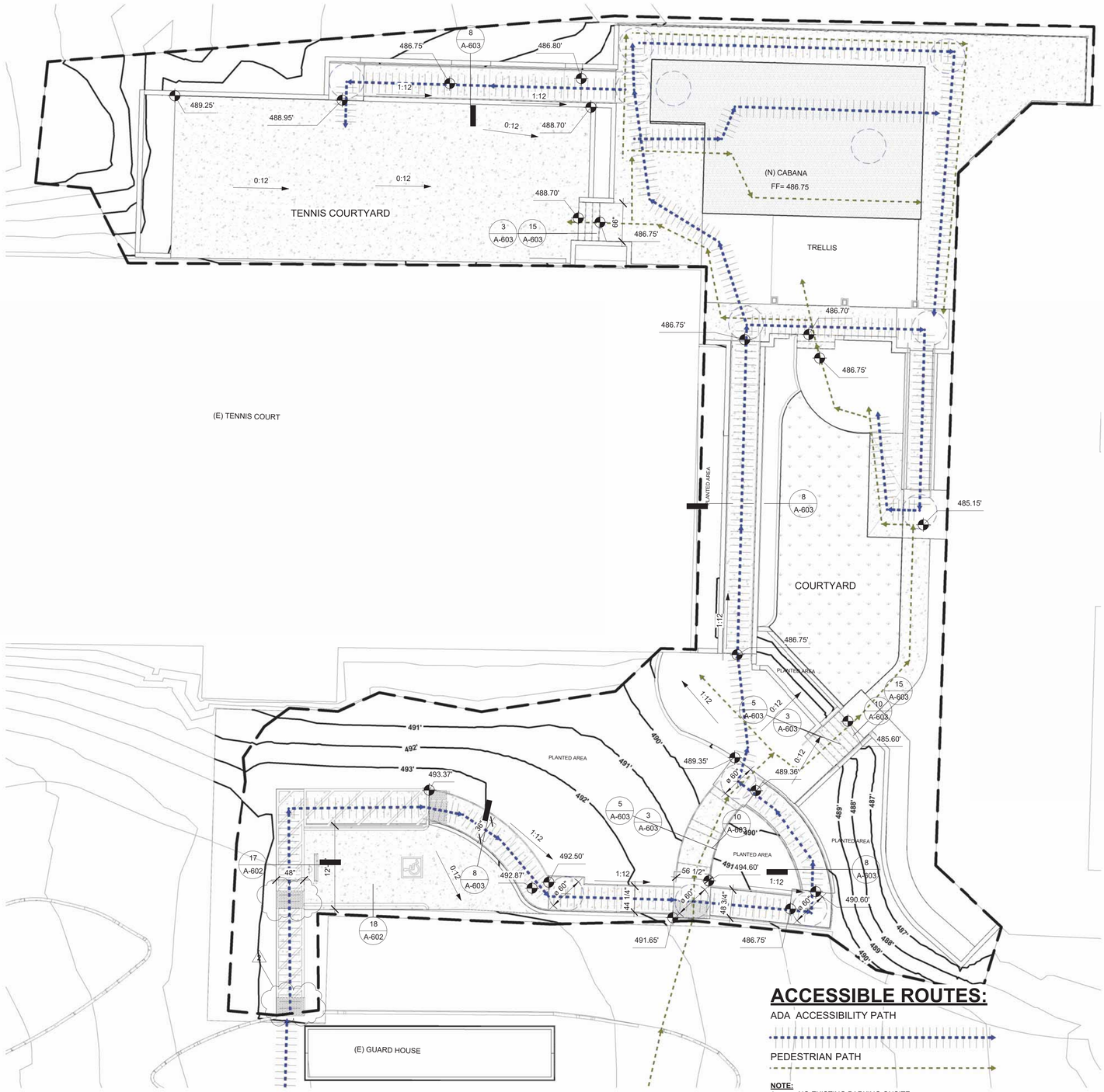

ACCESSIBLE ROUTES:

ADA ACCESSIBILITY PATH

PEDESTRIAN PATH

NOTE:

1. NO EXISTING PARKING ONSITE.
2. 3 PARKING STALLS PLUS; DESIGNATED ACROSS STREET @ ROLLING HILLS CITY HALL.
3. PUBLIC TRANSPORTATION .BUS STOP LOCATED @ SOUTH-WEST CORNER OF PV DR. NORTH.
4. ADA COMPLIANT CORNER TYPE CURB RAMPS EXIST @ ALL CORNERS OF INTERSECTION OF PV DR NORTH AND ROLLING HILLS RD.
5. PEDESTRIAN AND ADA TRAFFIC SHALL ORIGINATE FROM ROLLING HILLS CITY HALL EXISTING ACCESSIBLE PATH.
6. CURB SIDE DROP-OFF AND NEW VAN ACCESSIBLE ADA PARKING.

Site Plan - Accessible Route

1/8" = 1'-0"

OBELISK ARCHITECTS
A Professional Corporation

3800 PACIFIC COAST HIGHWAY
TORRANCE, CALIFORNIA 90505
obeliskarc.com
310.373.0810 fax
310.373.3568 tel

PROJECT

Rolling Hills Community Association

#2 Portuguese Bend Road
Rolling Hills, Ca. 90274

REVISIONS

No.	Description	Date
1	PLANNING CORRECTIONS	8-17-2023
2	PLANNING CORRECTIONS	3-19-2024

BUILDING AND SAFETY DIVISION
Department of Public Works
APPROVED
UNDER LOS ANGELES COUNTY CODE
TITLES 26, 30 AND 31
PUBLIC WORKS
09/27/2024 2:05:07 PM
This set of plans and specifications must be kept on the job site at all times and it is unlawful to make any changes, modifications or alterations to these plans or specifications without the prior written permission of the Building Official. The stamping of this set of plans and specifications SHALL NOT, under any circumstances, be deemed to permit or to be an approval of any work or activity that violates any provisions of any County Ordinance or State Law.

PROJECT NUMBER

Project Number

DATE

March 19, 2024

STAMP

REGISTERED PROFESSIONAL ARCHITECT
N. G. R. BAKHTIAN
EXP. 1-31-25
LIC# C26503
STATE OF CALIFORNIA

SHEET TITLE

Accessible Route Plan

THIS DOCUMENT IS FURNISHED IN CONFIDENCE FOR THE LIMITED PURPOSE OF EVALUATION, BIDDING OR REVIEW. THIS DOCUMENT AND ITS CONTENTS MAY NOT BE USED FOR ANY OTHER PURPOSE AND MAY NOT BE REPRODUCED OR DISCLOSED TO OTHERS WITHOUT THE PRIOR WRITTEN AUTHORIZED CONSENT OF OBELISK ARCHITECTS ALL RIGHTS RESERVED (C) 1997-2022

1

SHEET
A-002

ATTACHMENT 4

COUNTY OF LOS ANGELES
DEPARTMENT OF PUBLIC WORKS
BUILDING AND SAFETY DIVISION

STATEMENT OF COMPLIANCE WITH THE NONRESIDENTIAL ENERGY STANDARDS:
FOR CONSTRUCTION < 1000 SQ. FT. (AND 49 OCCUPANTS)

I hereby certify as a licensed architect or a licensed engineer with chief responsibility for the design, that the construction on the building located at

#2 Portuguese Bend Road, Rolling Hills, CA 90274
Project Address

has met the following conditions:

1. The building is of nonresidential occupancy
2. The scope of work listed on the application for a building permit was for less than 1000 square feet of conditioned floor area and an occupant load of 49 persons or less.
3. The completed construction and devices and materials used and installed appear in every respect to be in compliance with Section 10-103 of Part 1 of the State of California Energy Efficiency Standards for Nonresidential Buildings.

Compliance has been shown by the following method: (check one)

x Prescriptive ___Performance

DATE: March 8, 2024

PRINT NAME: Nagy Bakhoum, Architect

SIGNED: _____
(Licensed Architect or Engineer)

LICENSE NO. C26503

This signed form must be presented to the building inspector upon final inspection of the above project.

5-24-2005

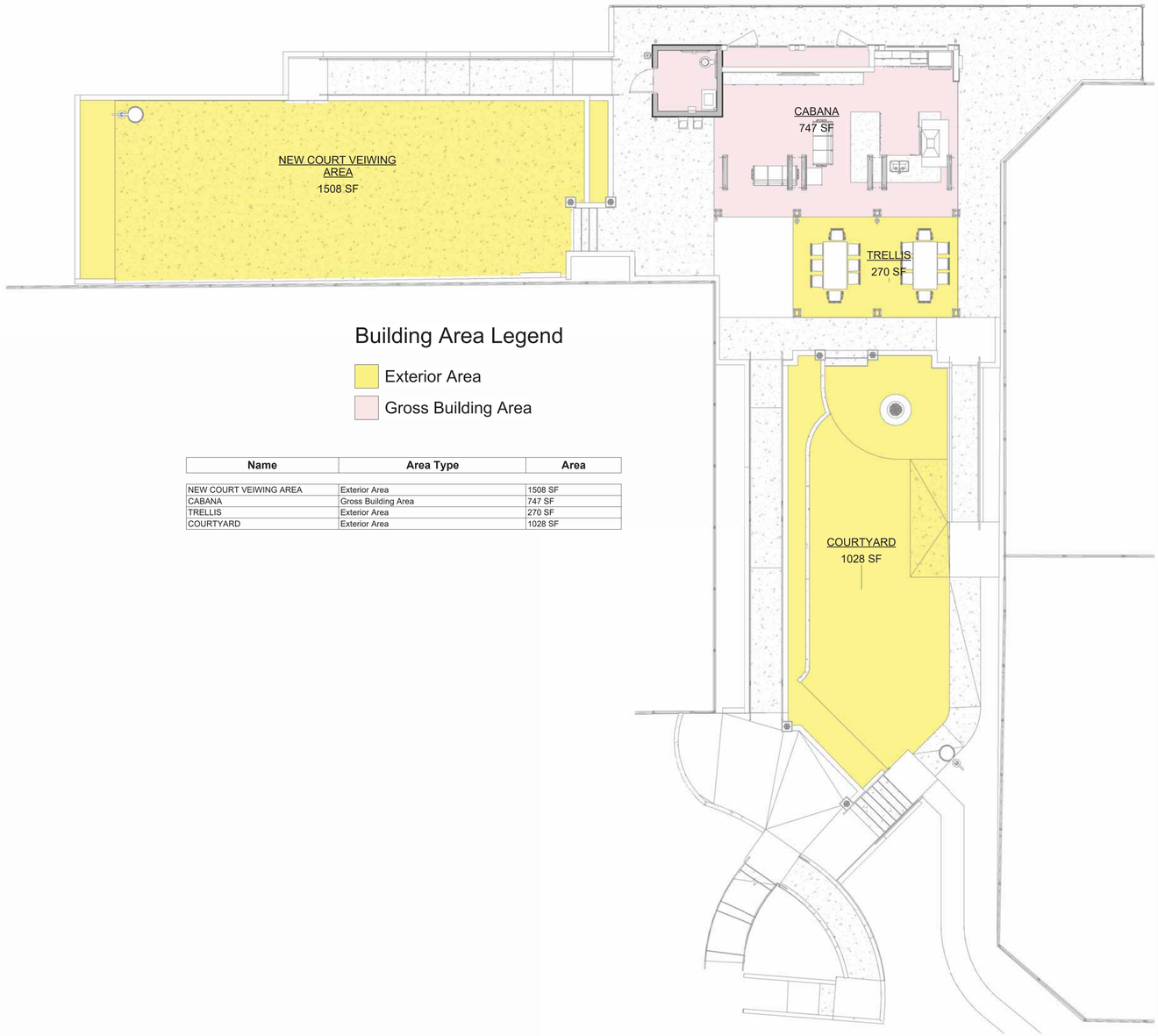

Building Area Legend

Exterior Area

Gross Building Area

Name	Area Type	Area
NEW COURT VEIWING AREA	Exterior Area	1508 SF
CABANA	Gross Building Area	747 SF
TRELLIS	Exterior Area	270 SF
COURTYARD	Exterior Area	1028 SF

Level 1
1/8" = 1'-0"

OBELISK ARCHITECTS
A Professional Corporation

3800 PACIFIC COAST HIGHWAY
TORRANCE, CALIFORNIA 90505
obeliskarc.com
310.373.0810 fax
310.373.3568 tel

PROJECT

Rolling Hills Community Association

#2 Portuguese Bend Road
Rolling Hills, Ca. 90274

REVISIONS

No.	Description	Date

BUILDING AND SAFETY DIVISION
Department of Public Works
APPROVED
UNDER LOS ANGELES COUNTY CODE
TITLES 26, 30 AND 31
tvto
PUBLIC WORKS
03/27/2024 2:05:07 PM
This set of plans and specifications shall be kept at the job site at all times and it is unlawful to make any changes, modifications or alterations to these plans and specifications without the prior written permission of the Building Official. The stamping of this set of plans and specifications SHALL NOT, under any circumstances, be deemed to permit or to be an approval of any work or activity that violates any provisions of any County Ordinance or State Law.

PROJECT NUMBER
Project Number

DATE
March 19, 2024

STAMP

REGISTERED PROFESSIONAL ARCHITECT
NAGY R. BAKHOUM
EXP 1-31-25
LIC# C26503
STATE OF CALIFORNIA

SHEET TITLE

Area Plan

THIS DOCUMENT IS FURNISHED IN CONFIDENCE FOR THE LIMITED PURPOSE OF EVALUATION, BIDDING OR REVIEW. THIS DOCUMENT AND ITS CONTENTS MAY NOT BE USED FOR ANY OTHER PURPOSE AND MAY NOT BE REPRODUCED OR DISCLOSED TO OTHERS WITHOUT THE PRIOR WRITTEN AUTHORIZED CONSENT OF OBELISK ARCHITECTS ALL RIGHTS RESERVED (C) 1997–2022

SHEET
A-003

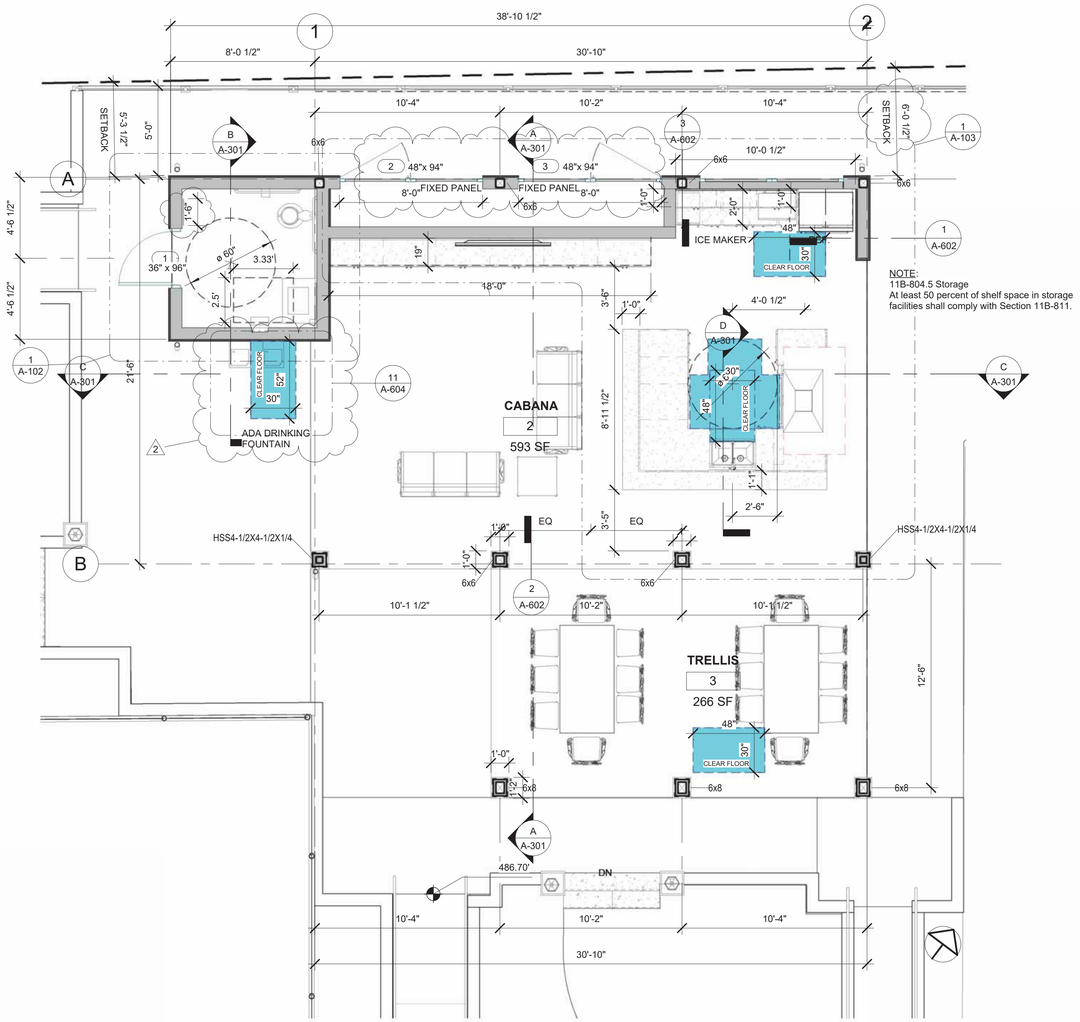

Level 1

1/4" = 1'-0"

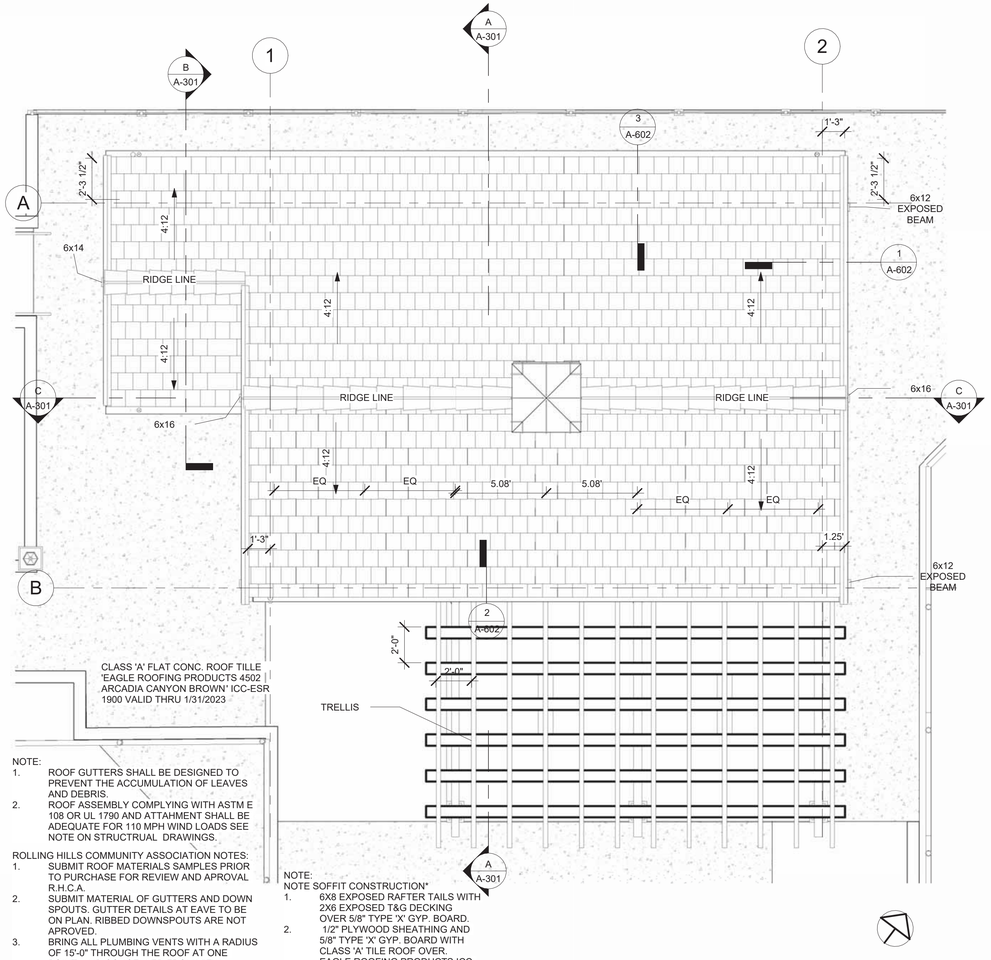

NOTE:
1. ROOF GUTTERS SHALL BE DESIGNED TO PREVENT THE ACCUMULATION OF LEAVES AND DEBRIS.
2. ROOF ASSEMBLY COMPLYING WITH ASTM E 108 OR UL 1790 AND ATTAHMENT SHALL BE ADEQUATE FOR 110 MPH WIND LOADS SEE NOTE ON STRUCTRUAL DRAWINGS.

ROLLING HILLS COMMUNITY ASSOCIATION NOTES:
1. SUBMIT ROOF MATERIALS SAMPLES PRIOR TO PURCHASE FOR REVIEW AND APROVAL R.H.C.A.
2. SUBMIT MATERIAL OF GUTTERS AND DOWN SPOUTS. GUTTER DETAILS AT EAVE TO BE ON PLAN. RIBBED DOWNSPOUTS ARE NOT APROVED.
3. BRING ALL PLUMBING VENTS WITH A RADIUS OF 15'-0" THROUGH THE ROOF AT ONE POINT. AND CONCEALED FROM VIEW WHERE POSSIBLE TO THE SATIFICATION OF BUILDING INSPECTOR.

NOTE:
NOTE SOFFIT CONSTRUCTION"
1. 6X8 EXPOSED RAFTER TAILS WITH 2X6 EXPOSED T&G DECKING OVER 5/8" TYPE 'X' GYP. BOARD.
2. 1/2" PLYWOOD SHEATHING AND 5/8" TYPE 'X' GYP. BOARD WITH CLASS 'A' TILE ROOF OVER EAGLE ROOFING PRODUCTS ICC-ESR 1900 VALID THRU 1/31/2023
3. FIRE RESISTIVE SIDING OVER 2X6 STUDS. 1/2" PLYWOOD SHEATHING AND 5/8"TYPE 'X' GYP. BOARD TYPICAL.
4. JAMES HARDIE ARTISAN V-CHANNEL ESR-2290 VALID THRU MARCH 2024.

Roof

1/4" = 1'-0"

OBELISK
ARCHITECTS
A Professional Corporation

3800 PACIFIC COAST HIGHWAY
TORRANCE, CALIFORNIA 90505
obeliskarc.com
310.373.0810 fax
310.373.3568 tel

PROJECT

Rolling Hills Community Association

#2 Portuguese Bend Road
Rolling Hills, Ca. 90274

REVISIONS

No.	Description	Date
1	PLANNING CORRECTIONS	8-17-2023
2	PLANNING CORRECTIONS	3-19-2024

BUILDING AND SAFETY DIVISION
Department of Public Works
APPROVED
UNDER LOS ANGELES COUNTY CODE
TITLES 26, 30 AND 33
PUBLIC WORKS
03/27/2024 2:05:07 PM
This set of plans and specifications must be kept at the job site at all times and it is unlawful to make any changes, modifications or alterations to these plans or specifications without the prior written permission of the Building Official. The stamping of this set of plans and specifications SHALL NOT, under any circumstances, be deemed to permit or to be an approval of any work or activity that violates any provisions of any County Ordinance or State Law.

PROJECT NUMBER
Project Number

DATE
March 19, 2024

STAMP

REGISTERED PROFESSIONAL ARCHITECT
WARREN R. BARNUM
EXP 1-31-25
LIC# C26503
STATE OF CALIFORNIA

SHEET TITLE

First Floor / Roof Plan

THIS DOCUMENT IS FURNISHED IN CONFIDENCE FOR THE LIMITED PURPOSE OF EVALUATION, BIDDING OR REVIEW. THIS DOCUMENT AND ITS CONTENTS MAY NOT BE USED FOR ANY OTHER PURPOSE AND MAY NOT BE REPRODUCED OR DISCLOSED TO OTHERS WITHOUT THE PRIOR WRITTEN AUTHORIZED CONSENT OF OBELISK ARCHITECTS ALL RIGHTS RESERVED (C) 1997-2022

SHEET
A-101

3/19/2024 4:39:45 PM H:\Rolling Hills Cabana Project\REVIT FILES\CITY OF ROLLING HILLS COMMUNITY ASSOC.rvt

ADA RESTROOM KEY NOTE:

1. H.C. WATER CLOSET SET TO ADA STANDARDS.
2. LAVATORY WITH LEVER HANDLES TYP. SET TO ADA STANDARDS.
3. WALL MOUNTED SOAP DISPENSER PER ADA STANDARDS.
4. WRAP/INSULATE HOT WATER AND DRAIN PIPES.
5. SEMI RECESSED PAPER DISPENSER/TRASH RECEPTICLE.
6. 36" GRAB BAR SET TO ADA STANDARDS.
7. 42" GRAB BAR SET TO ADA STANDARDS.
8. TOILET PAPER/SEAT COVER DISPENSER.
9. TOILET PAPER DISPENSER.
10. 5/8 GYP BOARD (GREEN BOARD) WALLS USE EPOXY PAINT FOR WASHABLE SURFACE.
11. 24" MIRROR MOUNTED PER ADA STANDARDS.
12. SMOOTH WASHABLE SURFACE AT WALLS AND CEILING.
13. DOOR WITH ADA HARDWARE AND KICK PLATE DOOR 3'-0" X 7'-0"X 1-¾" SOLID CORE. ALL HARDWARE TO BE ADA ACCESSIBLE LEVERS HANDLES AND KICKPLATE
14. FLOOR DRAIN.

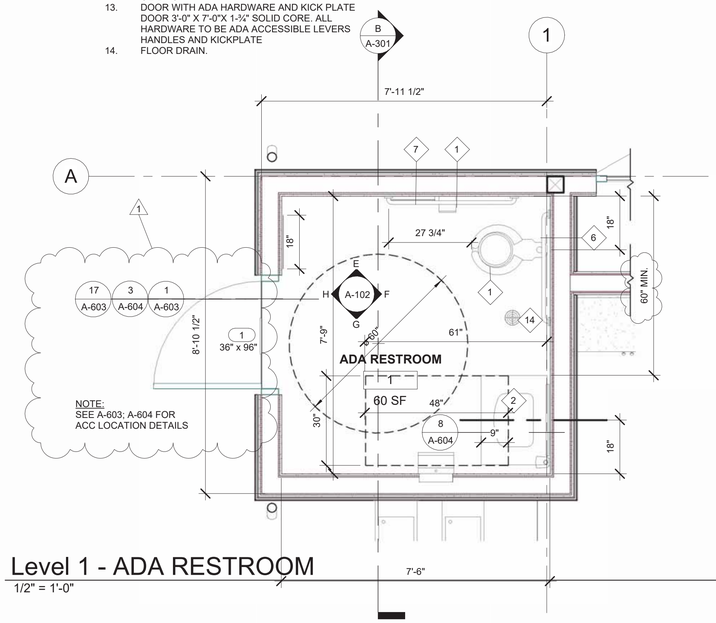

Level 1 - ADA RESTROOM
1/2" = 1'-0"

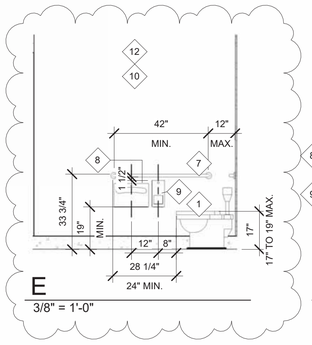

E
3/8" = 1'-0"

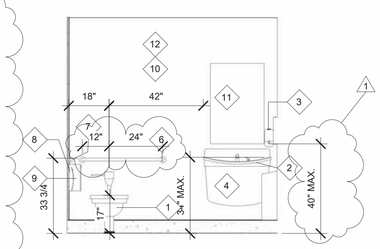

F
3/8" = 1'-0"

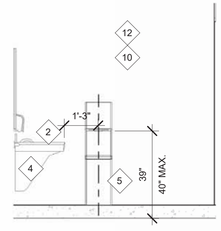

G
3/8" = 1'-0"

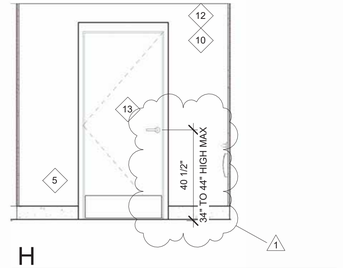

H
3/8" = 1'-0"

OBELISK
ARCHITECTS
A Professional Corporation

3800 PACIFIC COAST HIGHWAY
TORRANCE, CALIFORNIA 90505
obeliskarc.com
310.373.0810 fax
310.373.3568 tel

PROJECT

Rolling Hills Community Association

#2 Portuguese Bend Road
Rolling Hills, Ca. 90274

REVISIONS

No.	Description	Date
1	PLANNING CORRECTIONS	8-17-2023

BUILDING AND SAFETY DIVISION
Department of Public Works
APPROVED
UNDER LOS ANGELES COUNTY CODE
TITLES 26, 30 AND 31
EVED
PUBLIC WORKS
03/27/2024 2:05:07 PM
This set of plans and specifications must be kept at the job site at all times and it is unlawful to make any changes, modifications or alterations to these plans or specifications without the prior written permission of the Building Official. The stamping of this set of plans and specifications SHALL NOT, under any circumstances, be deemed to permit or to be an approval of any work or activity that violates any provisions of any County Ordinance or State Law.

PROJECT NUMBER
Project Number

DATE
March 19, 2024

STAMP



SHEET TITLE

ADA Restroom

THIS DOCUMENT IS FURNISHED IN CONFIDENCE FOR THE LIMITED PURPOSE OF EVALUATION, BIDDING OR REVIEW. THIS DOCUMENT AND ITS CONTENTS MAY NOT BE USED FOR ANY OTHER PURPOSE AND MAY NOT BE REPRODUCED OR DISCLOSED TO OTHERS WITHOUT THE PRIOR WRITTEN AUTHORIZED CONSENT OF OBELISK ARCHITECTS ALL RIGHTS RESERVED (C) 1997-2022

SHEET
1
A-102

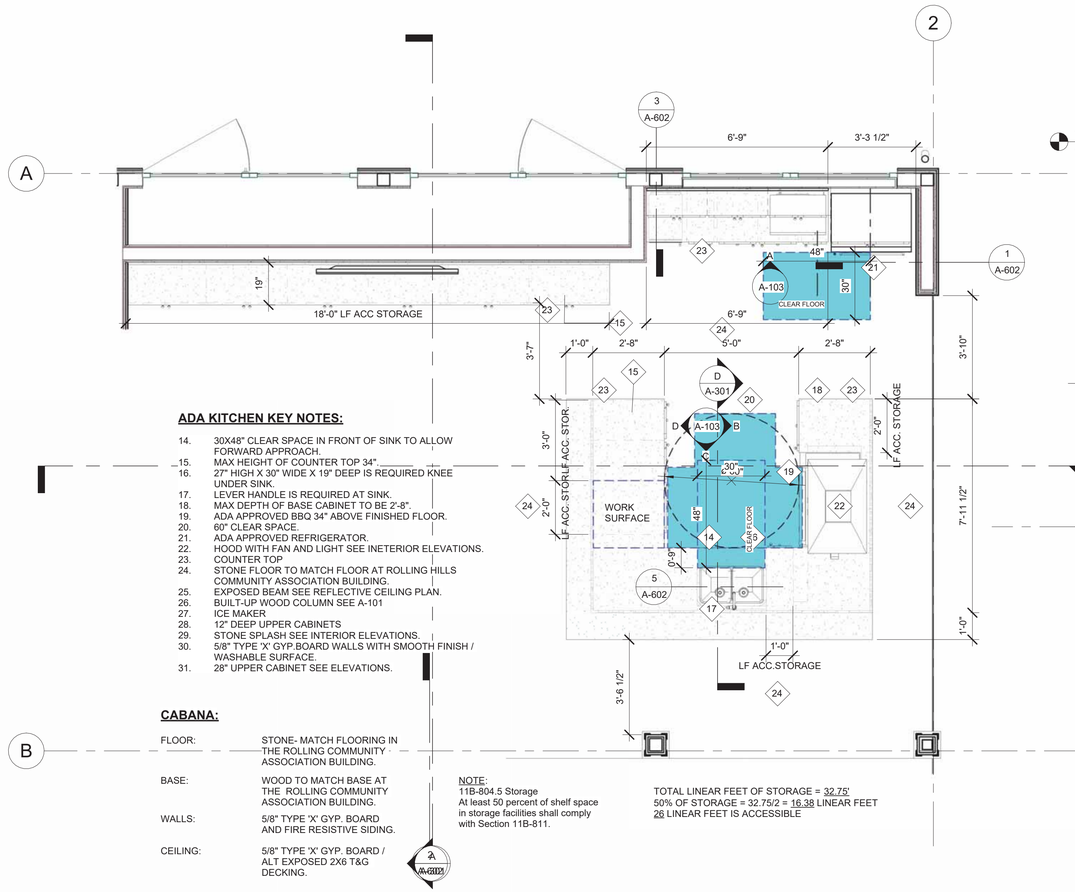

ADA KITCHEN KEY NOTES:

14. 30X48" CLEAR SPACE IN FRONT OF SINK TO ALLOW FORWARD APPROACH.
15. MAX HEIGHT OF COUNTER TOP 34"
16. 27" HIGH X 30" WIDE X 19" DEEP IS REQUIRED KNEE UNDER SINK.
17. LEVER HANDLE IS REQUIRED AT SINK.
18. MAX DEPTH OF BASE CABINET TO BE 2'-8".
19. ADA APPROVED BBQ 34" ABOVE FINISHED FLOOR.
20. 60" CLEAR SPACE.
21. ADA APPROVED REFRIGERATOR.
22. HOOD WITH FAN AND LIGHT SEE INETERIOR ELEVATIONS.
23. COUNTER TOP
24. STONE FLOOR TO MATCH FLOOR AT ROLLING HILLS COMMUNITY ASSOCIATION BUILDING.
25. EXPOSED BEAM SEE REFLECTIVE CEILING PLAN.
26. BUILT-UP WOOD COLUMN SEE A-101
27. ICE MAKER
28. 12" DEEP UPPER CABINETS
29. STONE SPLASH SEE INTERIOR ELEVATIONS.
30. 5/8" TYPE 'X' GYP.BOARD WALLS WITH SMOOTH FINISH / WASHABLE SURFACE.
31. 28" UPPER CABINET SEE ELEVATIONS.

CABANA:

FLOOR:	STONE- MATCH FLOORING IN THE ROLLING COMMUNITY ASSOCIATION BUILDING.
BASE:	WOOD TO MATCH BASE AT THE ROLLING COMMUNITY ASSOCIATION BUILDING.
WALLS:	5/8" TYPE 'X' GYP. BOARD AND FIRE RESISTIVE SIDING.
CEILING:	5/8" TYPE 'X' GYP. BOARD / ALT EXPOSED 2X6 T&G DECKING.

NOTE:
11B-804.5 Storage
At least 50 percent of shelf space in storage facilities shall comply with Section 11B-811.

TOTAL LINEAR FEET OF STORAGE = 32.75'
50% OF STORAGE = 32.75/2 = 16.38 LINEAR FEET
26 LINEAR FEET IS ACCESSIBLE

Level 1 -Enlarged Kitchen

3/8" = 1'-0"

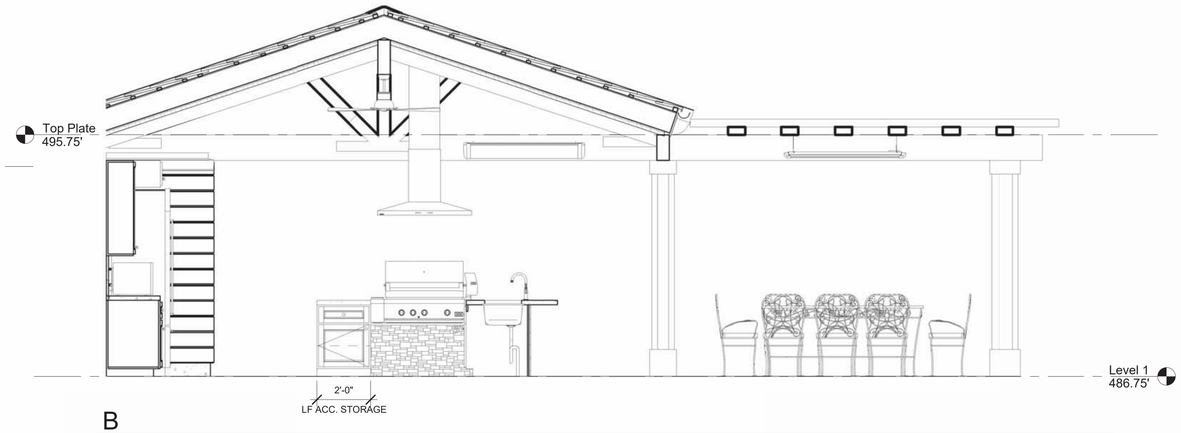

B
3/8" = 1'-0"

C
A-301

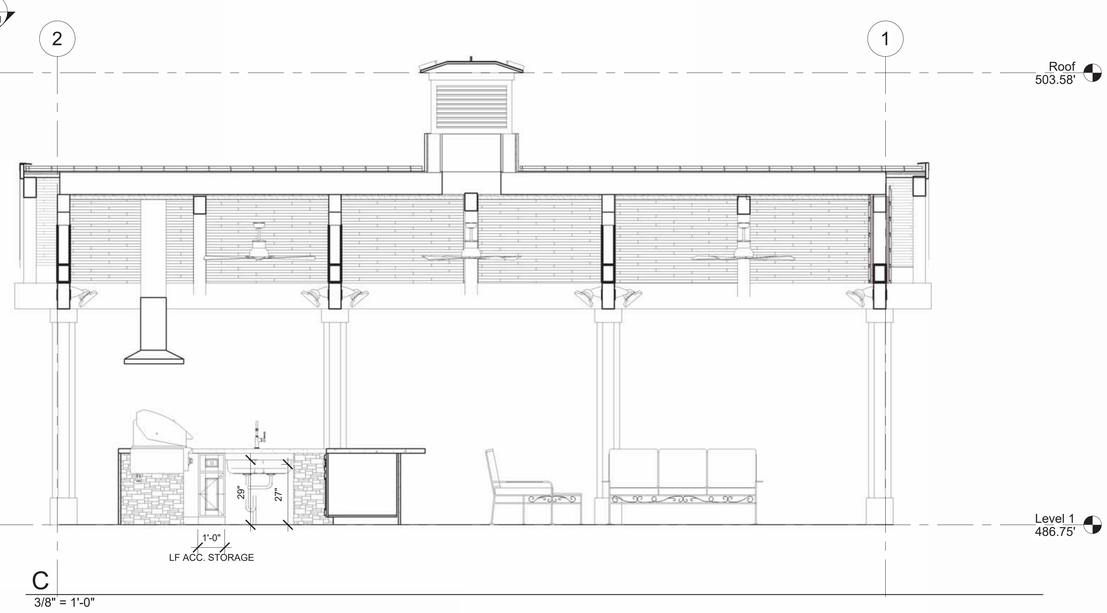

C
3/8" = 1'-0"

NOTES:

11B-308.2.2 Obstructed High Reach
Where a high forward reach is over an obstruction, the clear floor space shall extend beneath the element for a distance not less than the required reach depth over the obstruction. The high forward reach shall be 48 inches (1219 mm) maximum where the reach depth is 20 inches (508 mm) maximum. Where the reach depth exceeds 20 inches (508 mm), the high forward reach shall be 44 inches (1118 mm) maximum and the reach depth shall be 25 inches (635 mm) maximum.

11B-804.6.6 Refrigerator/Freezer
Combination refrigerators and freezers shall have at least 50 percent of the freezer space 54 inches (1372 mm) maximum above the finish floor or ground. The clear floor or ground space shall be positioned for a parallel approach to the space dedicated to a refrigerator/freezer with the centerline of the clear floor or ground space offset 24 inches (610 mm) maximum from the centerline of the dedicated space.

11B-804.5, at least 50% of the shelf space in storage provided in Kitchens, Kitchenettes and Wet Bars is required to comply with the accessibility requirements outlined in section 11B-811.

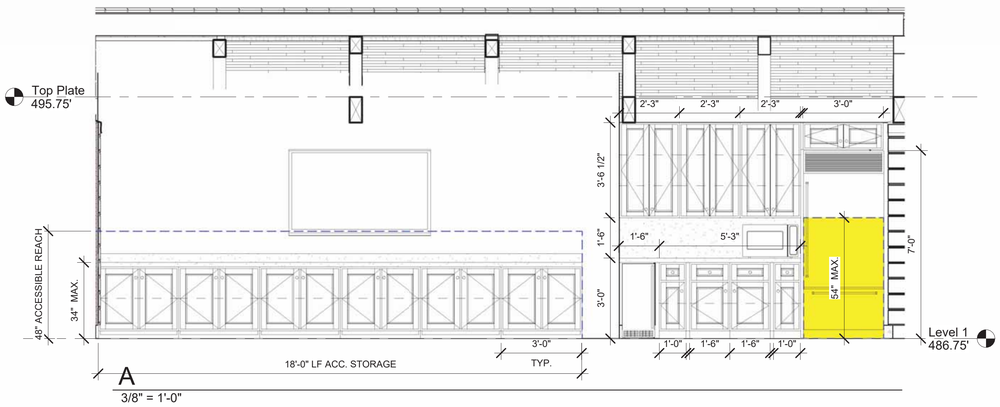

A
3/8" = 1'-0"

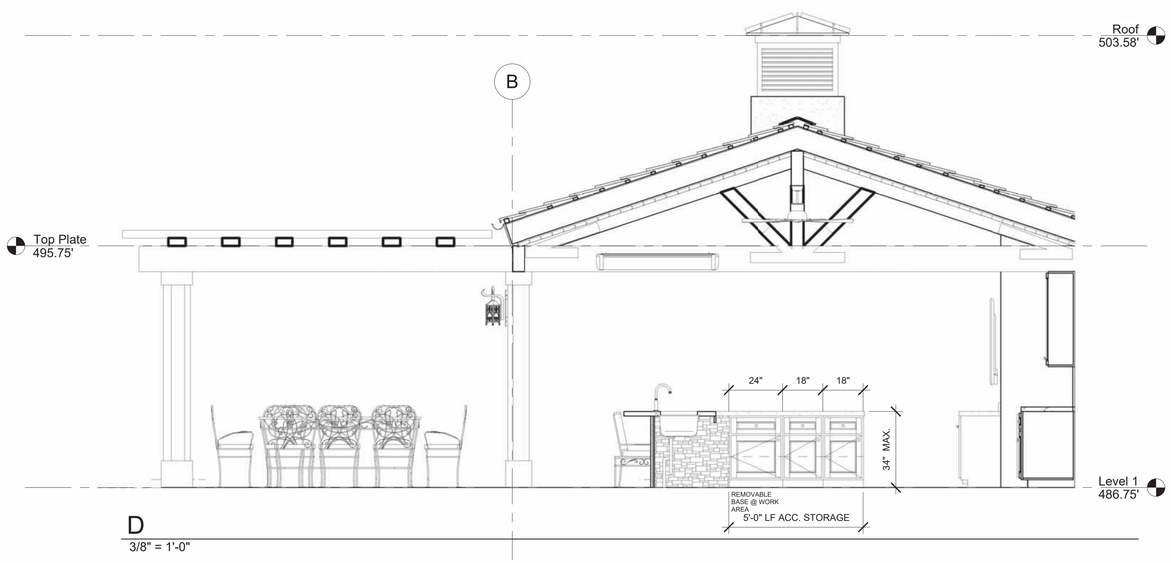

D
3/8" = 1'-0"

OBELISK
ARCHITECTS
A Professional Corporation

3800 PACIFIC COAST HIGHWAY
TORRANCE, CALIFORNIA 90505
obeliskarc.com
310.373.0810 fax
310.373.3568 tel

PROJECT

Rolling Hills Community Association

#2 Portuguese Bend Road
Rolling Hills, Ca. 90274

REVISIONS

No.	Description	Date
1	PLANNING CORRECTIONS	8-17-2023

BUILDING AND SAFETY DIVISION
Department of Public Works
APPROVED
UNDER LOS ANGELES COUNTY CODE
TITLES 26, 30 AND 31
DATE
PUBLIC WORKS
03/27/2024 2:05:07 PM

This set of plans and specifications shall be kept at the job site at all times and it is unlawful to make any changes, modifications or alterations to these plans or specifications without the prior written permission of the Building Official. The stamping of this set of plans and specifications SHALL NOT, under any circumstances, be deemed to permit or to be an approval of any work or activity that violates any provisions of any County Ordinance or State Law.

PROJECT NUMBER
Project Number

DATE
March 19, 2024

STAMP

REGISTERED PROFESSIONAL ARCHITECT
HANSEN BAKEWELL
EXP. 1-31-25
LIC# C26503
STATE OF CALIFORNIA

SHEET TITLE

ADA Kitchen

THIS DOCUMENT IS FURNISHED IN CONFIDENCE FOR THE LIMITED PURPOSE OF EVALUATION, BIDDING OR REVIEW. THIS DOCUMENT AND ITS CONTENTS MAY NOT BE USED FOR ANY OTHER PURPOSE AND MAY NOT BE REPRODUCED OR DISCLOSED TO OTHERS WITHOUT THE PRIOR WRITTEN AUTHORIZED CONSENT OF OBELISK ARCHITECTS ALL RIGHTS RESERVED (C) 1997-2022

SHEET
A-103

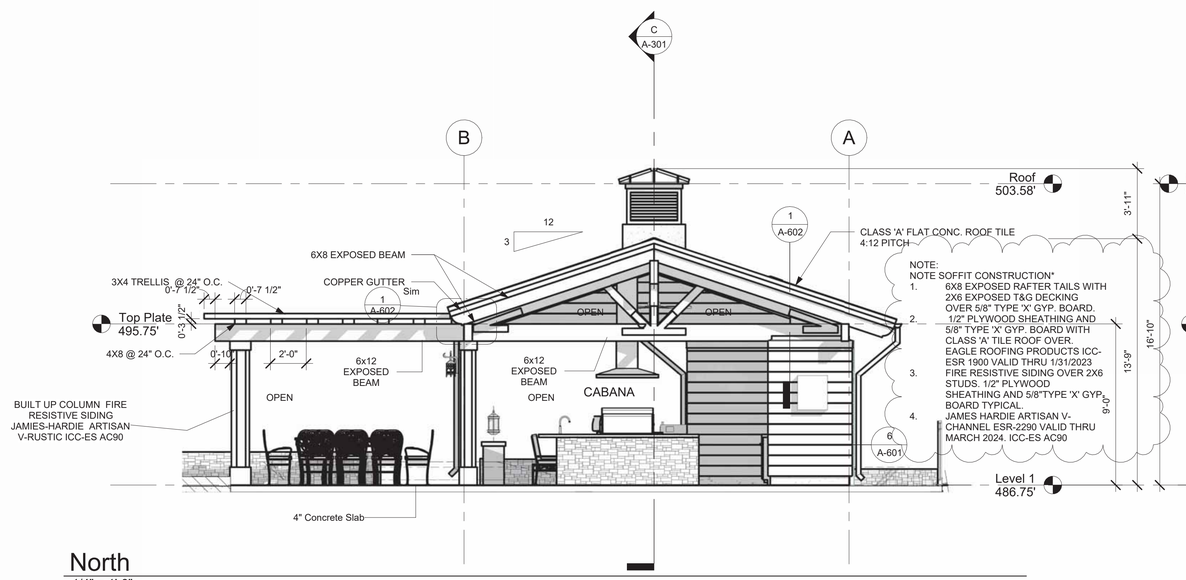

North
1/4" = 1'-0"

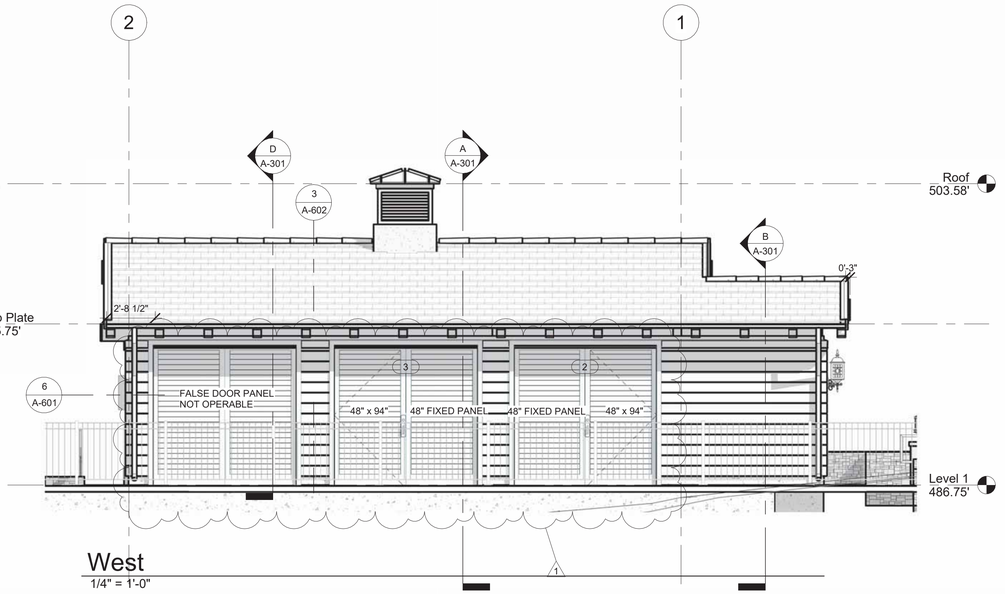

West
1/4" = 1'-0"

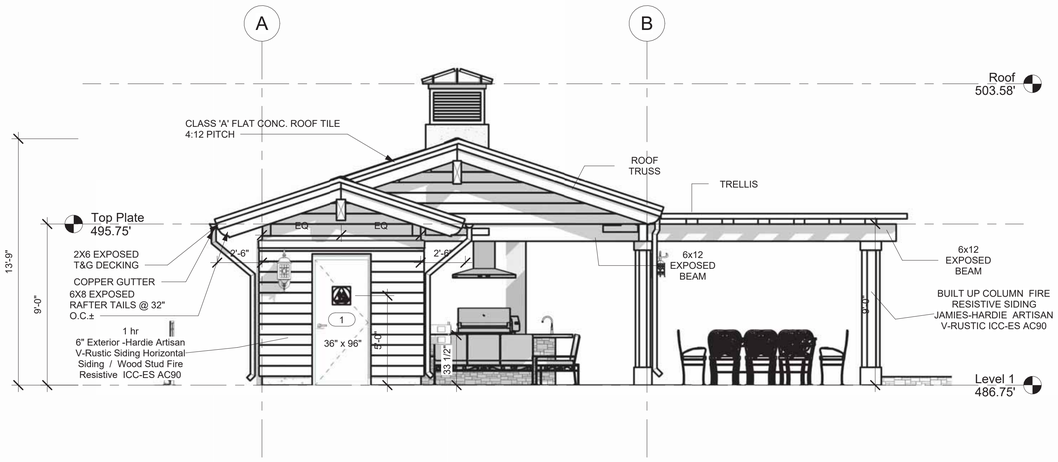

South
1/4" = 1'-0"

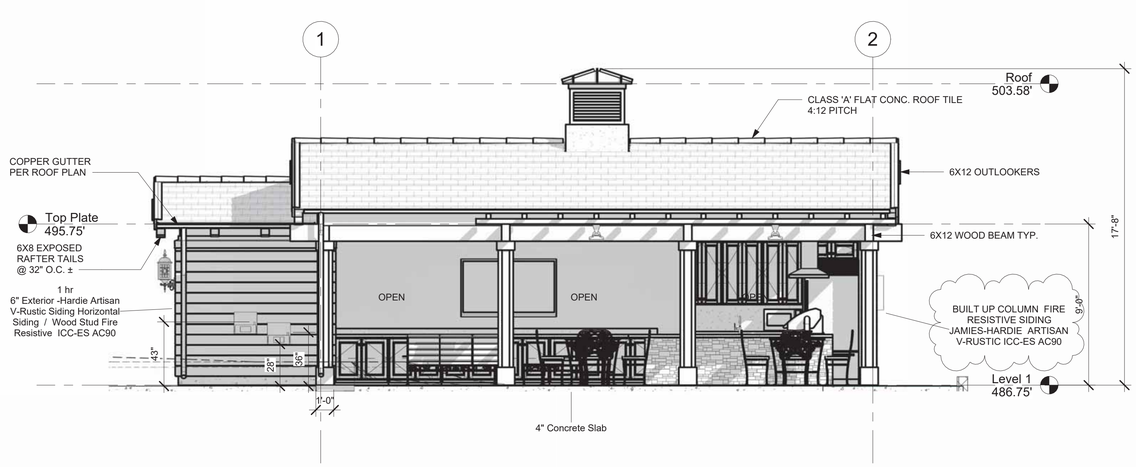

East
1/4" = 1'-0"

OBELISK
ARCHITECTS
A Professional Corporation

3800 PACIFIC COAST HIGHWAY
TORRANCE, CALIFORNIA 90505
obeliskarc.com
310.373.0810 fax
310.373.3568 tel

PROJECT

Rolling Hills
Community
Association

#2 Portuguese Bend Road
Rolling Hills, Ca. 90274

REVISIONS

No.	Description	Date
1	PLANNING CORRECTIONS	8-17-2023

BUILDING AND SAFETY DIVISION
Department of Public Works
APPROVED
UNDER LOS ANGELES COUNTY CODE
TITLES 26, 30 AND 31
By
PUBLIC WORKS
03/27/2024 2:05:07 PM
This set of plans and specifications shall be kept at the job site at all times and it is unlawful to make any changes, modifications or alterations to these plans or specifications without the prior written permission of the Building Official. The stamping of this set of plans and specifications SHALL NOT, under any circumstances, be deemed to permit or to be an approval of any work or activity that violates any provisions of any County Ordinance or State Law

PROJECT NUMBER
Project Number

DATE
March 19, 2024

STAMP

REGISTERED PROFESSIONAL ARCHITECT
NASRIN R. SAKHAI
EXP. 1-31-25
LIC# C26503
STATE OF CALIFORNIA

SHEET TITLE

Elevations

THIS DOCUMENT IS FURNISHED IN CONFIDENCE FOR THE LIMITED PURPOSE OF EVALUATION, BIDDING OR REVIEW. THIS DOCUMENT AND ITS CONTENTS MAY NOT BE USED FOR ANY OTHER PURPOSE AND MAY NOT BE REPRODUCED OR DISCLOSED TO OTHERS WITHOUT THE PRIOR WRITTEN AUTHORIZED CONSENT OF OBELISK ARCHITECTS ALL RIGHTS RESERVED (C) 1997-2022

SHEET
1
A-201

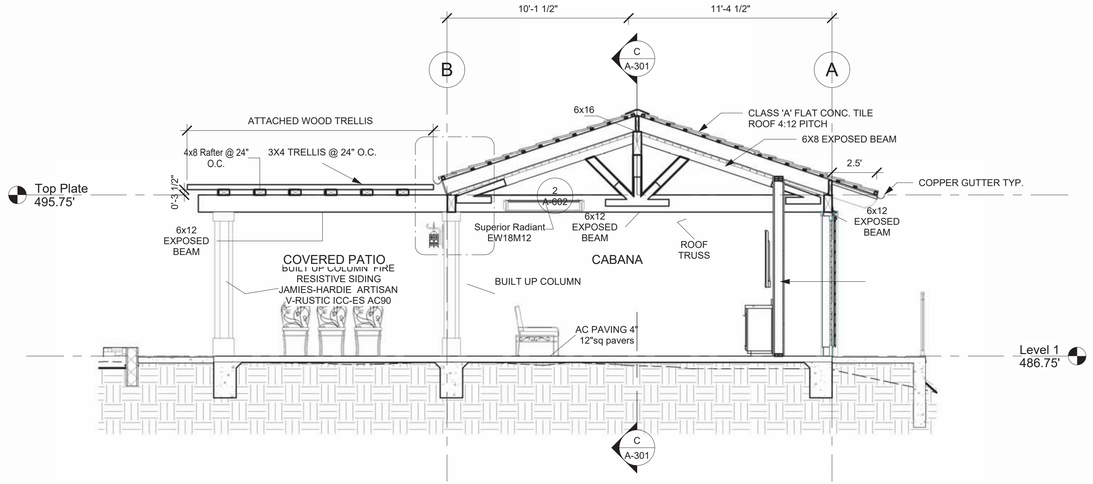

Section A

1/4" = 1'-0"

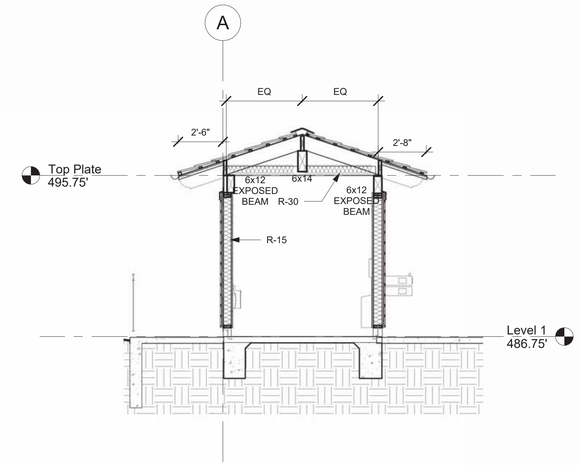

Section B

1/4" = 1'-0"

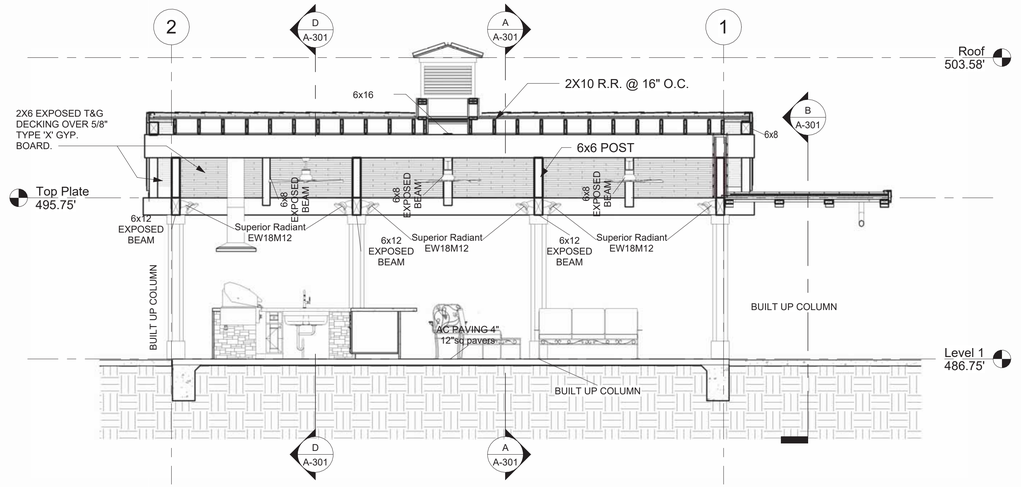

Section C

1/4" = 1'-0"

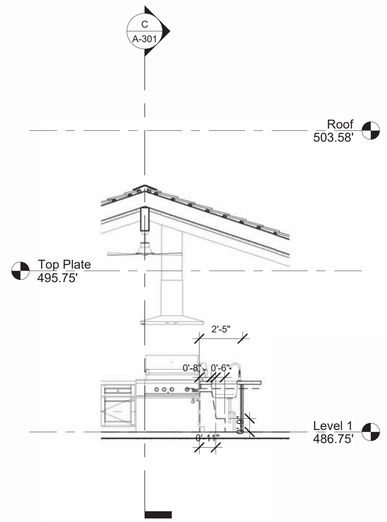

Section D

1/4" = 1'-0"

OBELISK
ARCHITECTS
A Professional Corporation

3800 PACIFIC COAST HIGHWAY
TORRANCE, CALIFORNIA 90505
obeliskarc.com
310.373.0810 fax
310.373.3568 tel

PROJECT

Rolling Hills
Community
Association

#2 Portuguese Bend Road
Rolling Hills, Ca. 90274

REVISIONS

No.	Description	Date

BUILDING AND SAFETY DIVISION
Department of Public Works
APPROVED
UNDER LOS ANGELES COUNTY CODE
TITLES 26, 30 AND 31
By to
PUBLIC WORKS
03/27/2024 2:05:07 PM

This set of plans and specifications shall be kept at the job site at all times and it is unlawful to make any changes, modifications or alterations to these plans or specifications without the prior written permission of the Building Official. The stamping of this set of plans and specifications SHALL NOT, under any circumstances, be deemed to permit or to be an approval of any work or activity that violates any provisions of any County Ordinance or State Law.

PROJECT NUMBER

Project Number

DATE

March 19, 2024

STAMP

REGISTERED PROFESSIONAL ARCHITECT
NASRIN R. BAKHTIAR
EXP. 1-31-25
LIC# C26503
STATE OF CALIFORNIA

SHEET TITLE

Building Sections

THIS DOCUMENT IS FURNISHED IN CONFIDENCE FOR THE LIMITED PURPOSE OF EVALUATION, BIDDING OR REVIEW. THIS DOCUMENT AND ITS CONTENTS MAY NOT BE USED FOR ANY OTHER PURPOSE AND MAY NOT BE REPRODUCED OR DISCLOSED TO OTHERS WITHOUT THE PRIOR WRITTEN AUTHORIZED CONSENT OF OBELISK ARCHITECTS ALL RIGHTS RESERVED (C) 1997-2022

SHEET

A-301



NORTH VIEW

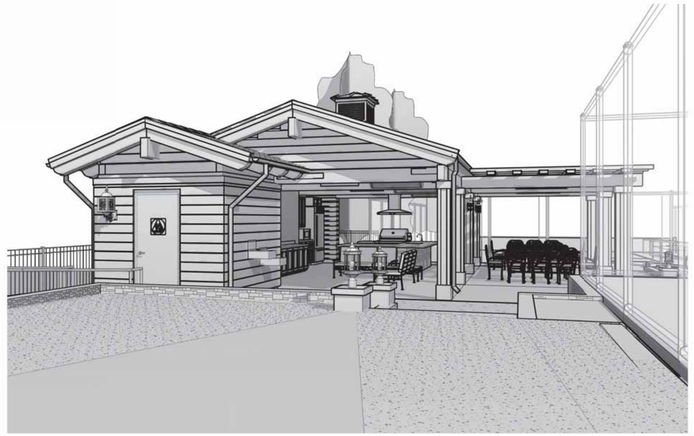

SOUTH VIEW

BBQ AREA

KITCHEN

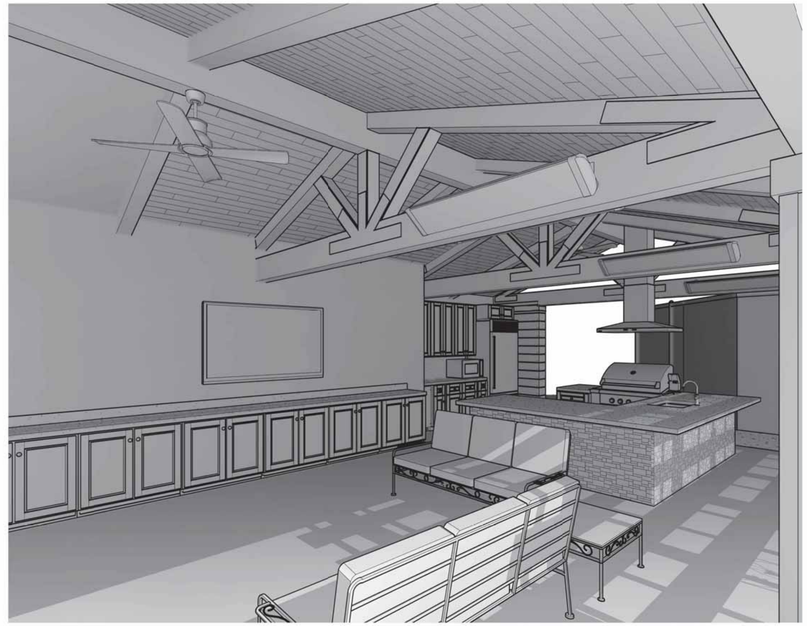

TV AREA

OBELISK
ARCHITECTS
A Professional Corporation

3800 PACIFIC COAST HIGHWAY
TORRANCE, CALIFORNIA 90505
obeliskarc.com
310.373.0810 fax
310.373.3568 tel

PROJECT

Rolling Hills Community Association

#2 Portuguese Bend Road
Rolling Hills, Ca. 90274

REVISIONS

No.	Description	Date

BUILDING AND SAFETY DIVISION
Department of Public Works
APPROVED
UNDER LOS ANGELES COUNTY CODE
TITLES 26, 30 AND 31
PUBLIC WORKS
03/27/2024 2:05:07 PM

This set of plans and specifications shall be kept at the job site at all times and it is unlawful to make any changes, modifications or alterations to these plans or specifications without the prior written permission of the Building Official. The stamping of this set of plans and specifications SHALL NOT, under any circumstances, be deemed to permit or to be an approval of any work or activity that violates any provisions of any County Ordinance or State Law.

PROJECT NUMBER

Project Number

DATE

March 19, 2024

STAMP

REGISTERED PROFESSIONAL ARCHITECT
WAYNE R. BARKSHIRE
EXP 1-31-25
LIC# C26503
STATE OF CALIFORNIA

SHEET TITLE

Perspectives

THIS DOCUMENT IS FURNISHED IN CONFIDENCE FOR THE LIMITED PURPOSE OF EVALUATION, BIDDING OR REVIEW. THIS DOCUMENT AND ITS CONTENTS MAY NOT BE USED FOR ANY OTHER PURPOSE AND MAY NOT BE REPRODUCED OR DISCLOSED TO OTHERS WITHOUT THE PRIOR WRITTEN AUTHORIZED CONSENT OF OBELISK ARCHITECTS ALL RIGHTS RESERVED (C) 1997–2022

SHEET

A-401













OBELISK
ARCHITECTS
A Professional Corporation

3800 PACIFIC COAST HIGHWAY
TORRANCE, CALIFORNIA 90505
obeliskarc.com
310.373.0810 fax
310.373.3568 tel

PROJECT

Rolling Hills Community Association

#2 Portuguese Bend Road
Rolling Hills, Ca. 90274

REVISIONS

No.	Description	Date

BUILDING AND SAFETY DIVISION
Department of Public Works
APPROVED
UNDER LOS ANGELES COUNTY CODE
TITLES 26, 30 AND 31
cvtv
PUBLIC WORKS
03/27/2024 2:05:07 PM
This set of plans and specifications must be kept at the job site at all times and it is unlawful to make any changes, modifications or alterations to these plans or specifications without the prior written permission of the Building Official. The stamping of this set of plans and specifications SHALL NOT, under any circumstances, be deemed to permit or to be an approval of any work or activity that violates any provisions of any County Ordinance or State Law.

PROJECT NUMBER

Project Number

DATE

March 19, 2024

STAMP

REGISTERED PROFESSIONAL ARCHITECT
WAYNE A. BARNUM
EXP 1-31-25
LIC# C26503
STATE OF CALIFORNIA

SHEET TITLE

Renderings

THIS DOCUMENT IS FURNISHED IN CONFIDENCE FOR THE LIMITED PURPOSE OF EVALUATION, BIDDING OR REVIEW. THIS DOCUMENT AND ITS CONTENTS MAY NOT BE USED FOR ANY OTHER PURPOSE AND MAY NOT BE REPRODUCED OR DISCLOSED TO OTHERS WITHOUT THE PRIOR WRITTEN AUTHORIZED CONSENT OF OBELISK ARCHITECTS ALL RIGHTS RESERVED (C) 1997-2022

SHEET

A-402

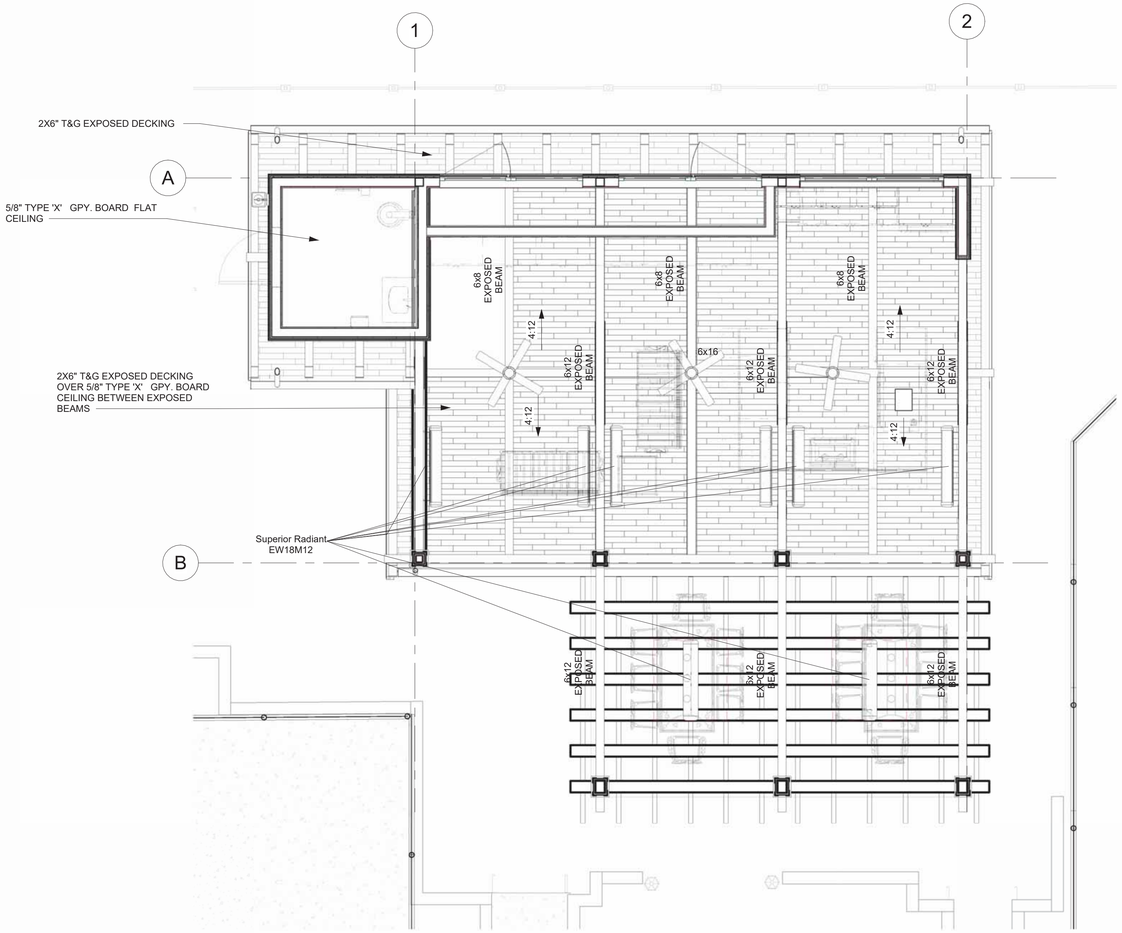

Level 1

1/4" = 1'-0"

OBELISK ARCHITECTS
A Professional Corporation

3800 PACIFIC COAST HIGHWAY
TORRANCE, CALIFORNIA 90505
obeliskarc.com
310.373.0810 fax
310.373.3568 tel

PROJECT

Rolling Hills Community Association

#2 Portuguese Bend Road
Rolling Hills, Ca. 90274

REVISIONS

No.	Description	Date

BUILDING AND SAFETY DIVISION
Department of Public Works
APPROVED
UNDER LOS ANGELES COUNTY CODE
TITLES 26, 30 AND 31
PUBLIC WORKS
03/27/2024 2:05:07 PM
This set of plans and specifications must be kept at the job site at all times and it is unlawful to make any changes, modifications or alterations to these plans or specifications without the prior written permission of the Building Official. The stamping of this set of plans and specifications SHALL NOT, under any circumstances, be deemed to permit or to be an approval of any work or activity that violates any provisions of any County Ordinance or State Law

PROJECT NUMBER

Project Number

DATE

March 19, 2024

STAMP

REGISTERED PROFESSIONAL ARCHITECT
MARK R. BANHAM
EXP. 1-31-25
LIC# C26503
STATE OF CALIFORNIA

SHEET TITLE

First Floor Reflected Ceiling Plan / Interior Elevations

THIS DOCUMENT IS FURNISHED IN CONFIDENCE FOR THE LIMITED PURPOSE OF EVALUATION, BIDDING OR REVIEW. THIS DOCUMENT AND ITS CONTENTS MAY NOT BE USED FOR ANY OTHER PURPOSE AND MAY NOT BE REPRODUCED OR DISCLOSED TO OTHERS WITHOUT THE PRIOR WRITTEN AUTHORIZED CONSENT OF OBELISK ARCHITECTS ALL RIGHTS RESERVED (C) 1997-2022

SHEET

A-501

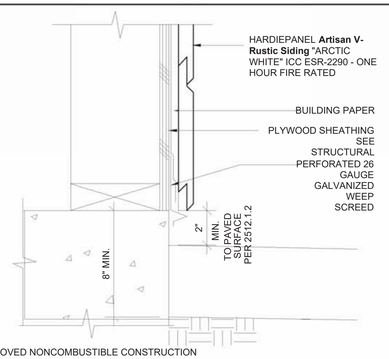

APPROVED NONCOMBUSTIBLE CONSTRUCTION

1 Wall Flashing @ Ext. Fin. Surf.

SCALE: 3"=1'-0"

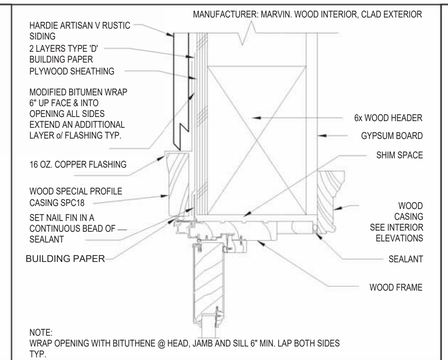

2 Exterior Out-Swing Door Head

SCALE: 3"=1'-0"

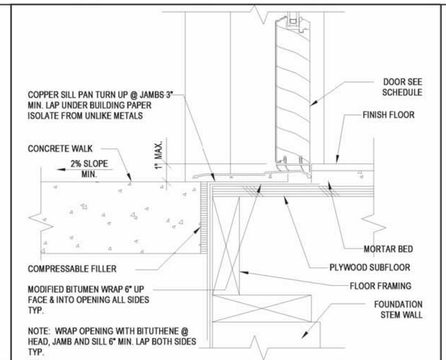

3 Exterior In-Swing Door Sill

SCALE: 3"=1'-0"

4

5

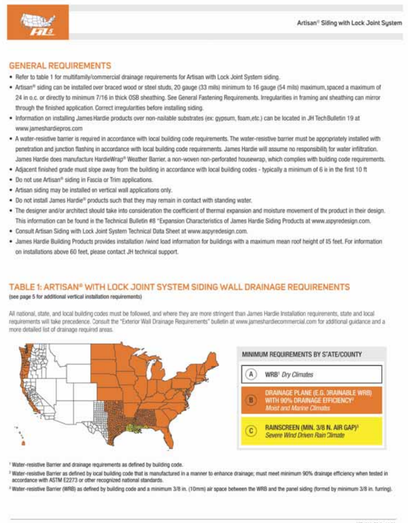

Artisan® Siding with Lock Joint System

GENERAL REQUIREMENTS

- Refer to table 1 for multifamily/commercial drainage requirements for Artisan with Lock Joint System siding.
- Artisan® siding can be installed over braced wood or steel studs, 20 gauge (33 mils) minimum to 16 gauge (54 mils) maximum,spaced a maximum of 24 in o.c. or directly to minimum 7/16 in thick OSB sheathing. See General Fastening Requirements. Irregularities in framing and sheathing can mirror through the finished application. Correct irregularities before installing siding.
- Information on installing James Hardie products over non-nailable substrates (ex: gypsum, foam,etc.) can be located in JH TechBulletin 19 at www.jameshardiepros.com
- A water-resistive barrier is required in accordance with local building code requirements. The water-resistive barrier must be appropriately installed with penetration and junction flashing in accordance with local building code requirements. James Hardie will assume no responsibility for water infiltration. James Hardie does manufacture HardieWrap® Weather Barrier, a non-woven non-perforated housewrap, which complies with building code requirements.
- Adjacent finished grade must slope away from the building in accordance with local building codes - typically a minimum of 6 ii in the first 10 ft
- Do not use Artisan® siding in Fascia or Trim applications.
- Artisan siding may be installed on vertical wall applications only.
- Do not install James Hardie® products such that they may remain in contact with standing water.
- The designer and/or architect should take into consideration the coefficient of thermal expansion and moisture movement of the product in their design. This information can be found in the Technical Bulletin #9 "Expansion Characteristics of James Hardie Siding Products at www.aspyredesign.com.
- Consult Artisan Siding with Lock Joint System Technical Data Sheet at www.aspyredesign.com.
- James Hardie Building Products provides installation /wind load information for buildings with a maximum mean roof height of l5 feet. For information on installations above 60 feet, please contact JH technical support.

TABLE 1: ARTISAN® WITH LOCK JOINT SYSTEM SIDING WALL DRAINAGE REQUIRENENTS

(see page 5 for additional vertical installation requirements)

All national, state, and local building codes must be followed, and where they are more stringent than James Hardie Installation requirements, state and local requirements will take precedence. Consult the "Exterior Wall Drainage Requirements" bulletin at www.jameshardiecommercial.com for additional guidance and a more detailed list of drainage required areas.

MINIMUM REQUIREMENTS BY S'TATE/COUNTY

- A — WRB[1] *Dry Climates*
- B — DRAINAGE PLANE (E.G. 3RAINABLE WRB) WITH 90% DRAINAGE EFFICIENCY[2] *Moist and Marine Climates*
- C — RAINSCREEN (MIN. 3/8 N. AIR GAP)[3] *Severe Wind Driven Rain Climate*

[1] Water-resistive Barrier and drainage requirements as defined by building code.
[2] Water-resistive Barrier as defined by local building code that is manufactured in a manner to enhance drainage, must meet minimum 90% drainage efficiency when tested in accordance with ASTM E2273 or other recognized national standards.
[3] Water-resistive Barrier (WRB) as defined by building code and a minimum 3/8 in. (10mm) air space between the WRB and the panel siding (formed by minimum 3/8 in. furring).

ASP1838 P2/9 11/20

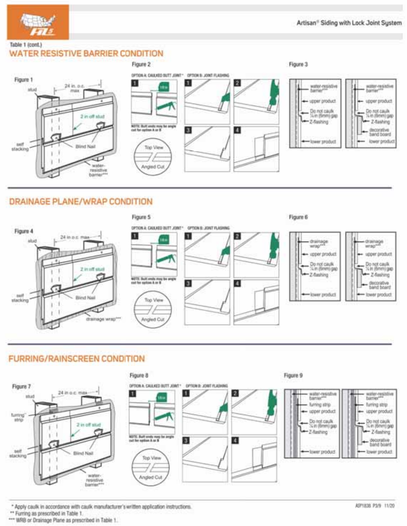

Artisan® Siding with Lock Joint System

Table 1 (cont.)

WATER RESISTIVE BARRIER CONDITION

Figure 1

Figure 2

Figure 3

DRAINAGE PLANE/WRAP CONDITION

Figure 4

Figure 5

Figure 6

FURRING/RAINSCREEN CONDITION

Figure 7

Figure 8

Figure 9

* Apply caulk in accordance with caulk manufacturer's written application instructions.
** Furring as prescribed in Table 1.
*** WRB or Drainage Plane as prescribed in Table 1.

ASP1838 P2/9 11/20

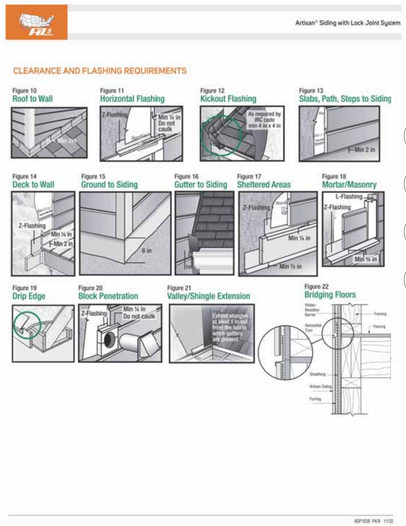

Artisan® Siding with Lock Joint System

CLEARANCE AND FLASHING REQUIREMENTS

Figure 10 — Roof to Wall

Figure 11 — Horizontal Flashing

Figure 12 — Kickout Flashing

Figure 13 — Slabs, Path, Steps to Siding

Figure 14 — Deck to Wall

Figure 15 — Ground to Siding

Figure 16 — Gutter to Siding

Figure 17 — Sheltered Areas

Figure 18 — Mortar/Masonry

Figure 19 — Drip Edge

Figure 20 — Block Penetration

Figure 21 — Valley/Shingle Extension

Figure 22 — Bridging Floors

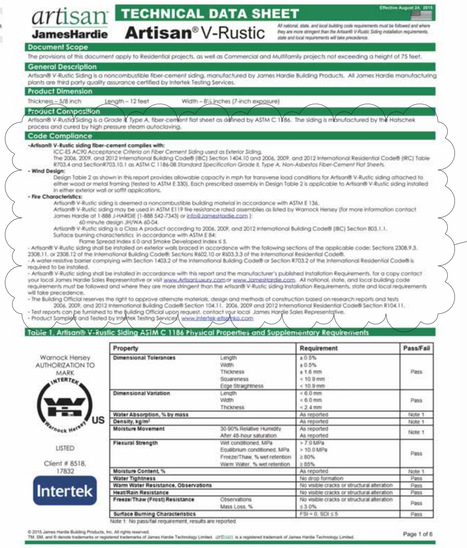

artisan JamesHardie **TECHNICAL DATA SHEET** — **Artisan® V-Rustic**

Effective August 24, 2015

At national, state, and local building code requirements must be followed and where they are more stringent than the Artisan® V-Rustic Siding installation requirements, state and local requirements will take precedence.

Document Scope

the provisions of this document apply to Residential projects, as well as Commercial and Multifamily projects not exceeding a height of 75 feet.

General Description

Artisan® V-Rustic Siding is a noncombustible fiber-cement siding, manufactured by James Hardie Building Products. All James Hardie manufacturing plants are third party quality assurance certified by Intertek Testing Services.

Product Dimension

Thickness – 5/8 inch Length – 12 feet Width – 8 ¼ inches (7-inch exposure)

Product Composition

Artisan® V-Rustic Siding is a Grade II Type A, fiber-cement flat sheet as defined by ASTM C 1186. The siding is manufactured by the Hatschek process and cured by high pressure steam autoclaving.

Code Compliance

- **Artisan® V-Rustic siding fiber-cement complies with:**
  ICC-ES AC90 Acceptance Criteria on fiber Cement Siding used as Exterior Siding.
  The 2006, 2009, and 2012 International Building Code® (IBC) Section 1404.10 and 2006, 2009, and 2012 International Residential Code® (IRC) Table R703.4 and Section R703.10.1 as ASTM C 1186-08 Standard Specification Grade II, Type A, Non-Asbestos Fiber-Cement Flat Sheets.
- **Wind Design:**
  Design Table 2 as shown in this report provides allowable capacity in mph for transverse load conditions for Artisan® V-Rustic siding attached to either wood or metal framing (tested to ASTM E 330). Each prescribed assembly in Design Table 2 is applicable to Artisan® V-Rustic siding installed in either exterior wall or soffit applications.
- **Fire Characteristics:**
  Artisan® V-Rustic siding is deemed a noncombustible building material in accordance with ASTM E 136.
  Artisan® V-Rustic siding may be used in ASTM E119 fire resistance rated assemblies as listed by Warnock Hersey (for more information contact James Hardie at 1-888 J-HARDIE (1-888 542-7343) or info@JamesHardie.com) 1
  - 40-minute design JHWA 40-04.
  Artisan® V-Rustic siding is a Class A product according to 2006, 2009, and 2012 International Building Code® (IBC) Section 803.1.1.
  Surface burning characteristics in accordance with ASTM E 84:
  Flame Spread Index ≤ 0 and Smoke Developed Index ≤ 5.
- Artisan® V-Rustic siding shall be installed in accordance with this report and the manufacturer's published Installation Requirements, for a copy contact your local James Hardie Sales Representative or visit www.ArtisanLuxury.com or www.JamesHardie.com. All national, state, and local building code requirements must be followed and where they are more stringent than the Artisan® V-Rustic siding Installation Requirements, state and local requirements will take precedence.
- The Building Official reserves the right to approve alternate materials, design and methods of construction based on research reports and tests 2006, 2009, and 2012 International Building Code® Section 104.11, 2006, 2009 and 2012 International Residential Code® Section R104.11.
- Test reports can be furnished to the Building Official upon request, contact your local James Hardie Sales Representative.
- Product Sampled and Tested by Intertek Testing Services, www.intertek-etsna.com

Table 1, Artisan® V-Rustic Siding ASTM C 1186 Physical Properties and Supplementary Requirements

Property			Requirement	Pass/Fail
Dimensional Tolerances	Length		± 0.5%	Pass
	Width		± 0.5%	
	Thickness		± 1.6 mm	
	Squareness		< 10.9 mm	
	Edge Straightness		< 10.9 mm	
Dimensional Variation	Length		< 6.0 mm	Pass
	Width		< 6.0 mm	
	Thickness		< 2.4 mm	
Water Absorption, % by mass			As reported	Note 1
Density, kg/m³			As reported	Note 1
Moisture Movement		30-90% Relative Humidity	As reported	Note 1
		After 48-hour saturation	As reported	
Flexural Strength		Wet conditioned, MPa	> 7.0 MPa	Pass
		Equilibrium conditioned, MPa	> 10.0 MPa	
		Freeze/Thaw, % wet retention	≥ 80%	
		Warm Water, % wet retention	≥ 85%	
Moisture Content, %			As reported	Note 1
Water Tightness			No drop formation	Pass
Warm Water Resistance, Observations			No visible cracks or structural alteration	Pass
Heat/Rain Resistance			No visible cracks or structural alteration	Pass
Freeze/Thaw (Frost) Resistance		Observations	No visible cracks or structural alteration	Pass
		Mass Loss, %	≤ 3.0%	
Surface Burning Characteristics			FSI = 0, SDI ≤ 5	Pass

Note 1: No pass/fail requirement, results are reported

© 2015 James Hardie Building Products, Inc. All rights reserved.
TM, SM, and ® denote trademarks or registered trademarks of James Hardie Technology Limited. (JHTL021) is a registered trademark of James Hardie Technology Limited.

Warnock Hersey AUTHORIZATION TO MARK — LISTED Client # 8518, 17832 — Intertek

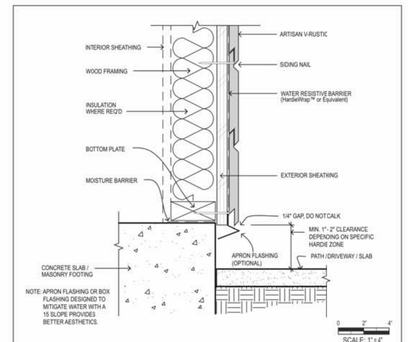

HARDSCAPE CLEARANCES

These drawings are published as an information guide only. These CAD drawings are intended as templates to assist the designer. They do not contain the full details required for construction and must be read in conjunction with the installation instructions on www.jameshardie.com. You should obtain architectural, engineering or other technical advice to assess the suitability of these drawings to the requirements of your particular project. James Hardie accepts no liability in respect to the use of these drawings.

For fastener specifications and complete installation instructions refer to appropriate documentation at www.JamesHardie.com

DETAIL: Artisan V-Rustic 3.02 Rev. 2 (2015)

Artisan V-Rustic Siding on Wood Framing
- Wood Framing
- OSB or Plywood Sheathing

JamesHardie Commercial

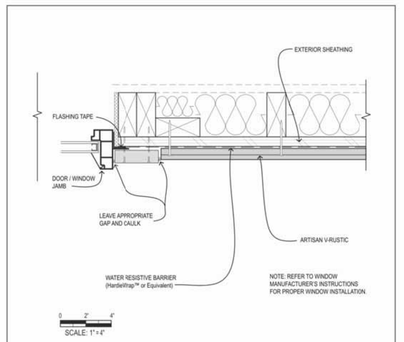

DOOR / WINDOW JAMB

These drawings are published as an information guide only. These CAD drawings are intended as templates to assist the designer. They do not contain the full details required for construction and must be read in conjunction with the installation instructions on www.jameshardie.com. You should obtain architectural, engineering or other technical advice to assess the suitability of these drawings to the requirements of your particular project. James Hardie accepts no liability in respect to the use of these drawings.

For fastener specifications and complete installation instructions refer to appropriate documentation at www.JamesHardie.com

DETAIL: Artisan V-Rustic 3.10 Rev. 2 (2015)

Artisan V-Rustic Siding on Wood Framing
- Wood Framing
- OSB or Plywood Sheathing

JamesHardie Commercial

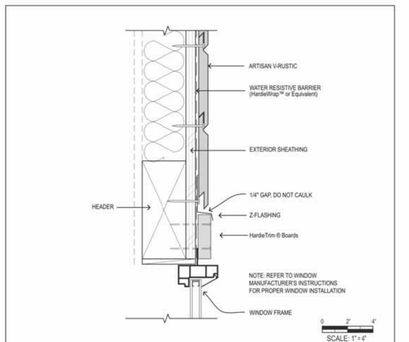

WINDOW/DOOR HEAD

These drawings are published as an information guide only. These CAD drawings are intended as templates to assist the designer. They do not contain the full details required for construction and must be read in conjunction with the installation instructions on www.jameshardie.com. You should obtain architectural, engineering or other technical advice to assess the suitability of these drawings to the requirements of your particular project. James Hardie accepts no liability in respect to the use of these drawings.

For fastener specifications and complete installation instructions refer to appropriate documentation at www.JamesHardie.com

DETAIL: Artisan V-Rustic 3.08 Rev. 2 (2015)

Artisan V-Rustic Siding on Wood Framing
- Wood Framing
- OSB or Plywood Sheathing

JamesHardie Commercial

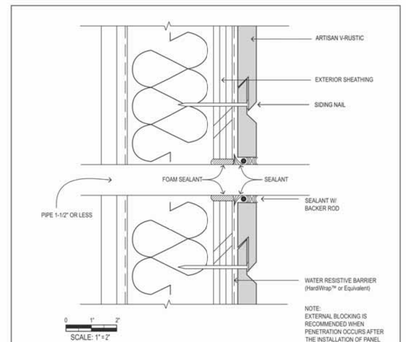

1-1/2" OR LESS PENETRATION TREATMENT

These drawings are published as an information guide only. These CAD drawings are intended as templates to assist the designer. They do not contain the full details required for construction and must be read in conjunction with the installation instructions on www.jameshardiecommercial.com. You should obtain architectural, engineering or other technical advice to assess the suitability of these drawings to the requirements of your particular project. James Hardie accepts no liability in respect to the use of these drawings.

For fastener specifications and complete installation instructions refer to appropriate documentation at www.JamesHardieCommercial.com.

DETAIL: Artisan V-Rustic 3.06 Rev. 2 (2015)

Artisan V-Rustic Siding on Wood Framing
- Wood Framing
- OSB or Plywood Sheathing

JamesHardie Commercial

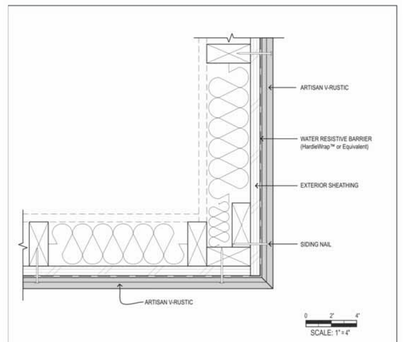

OUTSIDE CORNER

These drawings are published as an information guide only. These CAD drawings are intended as templates to assist the designer. They do not contain the full details required for construction and must be read in conjunction with the installation instructions on www.jameshardie.com. You should obtain architectural, engineering or other technical advice to assess the suitability of these drawings to the requirements of your particular project. James Hardie accepts no liability in respect to the use of these drawings.

For fastener specifications and complete installation instructions refer to appropriate documentation at www.JamesHardie.com

DETAIL: Artisan V-Rustic 3.04c Rev. 2 (2015)

Artisan V-Rustic Siding on Wood Framing
- Wood Framing
- OSB or Plywood Sheathing

JamesHardie Commercial

6 HARDIEPANEL ARTISAN V HORIZONTAL SIDING - ARTIC WHITE - 1 HR FIRE

OBELISK ARCHITECTS
A Professional Corporation

3800 PACIFIC COAST HIGHWAY
TORRANCE, CALIFORNIA 90505
obeliskarc.com
310.373.0810 fax
310.373.3568 tel

PROJECT

Rolling Hills Community Association

#2 Portuguese Bend Road
Rolling Hills, Ca. 90274

REVISIONS

No.	Description	Date
1	PLANNING CORRECTIONS	8-17-2023

BUILDING AND SAFETY DIVISION
Department of Public Works
APPROVED
UNDER LOS ANGELES COUNTY CODE
TITLES 26, 30 AND 31
Eyco
03/27/2024 2:05:07 PM
This set of plans and specifications must be kept at the job site at all times and it is unlawful to make any changes, modifications or alterations to these plans or specifications without the prior written permission of the Building Official. The stamping of this set of plans and specifications SHALL NOT, under any circumstances, be deemed to permit or to be an approval of any work or activity that violates any provisions of any County Ordinance or State Law.

PROJECT NUMBER
Project Number

DATE
March 19, 2024

STAMP

REGISTERED PROFESSIONAL ARCHITECT — NASRIN R. BAKHTIAR — STATE OF CALIFORNIA
EXP. 1-31-25
LIC# C26503

SHEET TITLE

Architectural Details

THIS DOCUMENT IS FURNISHED IN CONFIDENCE FOR THE LIMITED PURPOSE OF EVALUATION, BIDDING OR REVIEW. THIS DOCUMENT AND ITS CONTENTS MAY NOT BE USED FOR ANY OTHER PURPOSE AND MAY NOT BE REPRODUCED OR DISCLOSED TO OTHERS WITHOUT THE PRIOR WRITTEN AUTHORIZED CONSENT OF OBELISK ARCHITECTS. ALL RIGHTS RESERVED (C) 1997–2022

SHEET

A-601

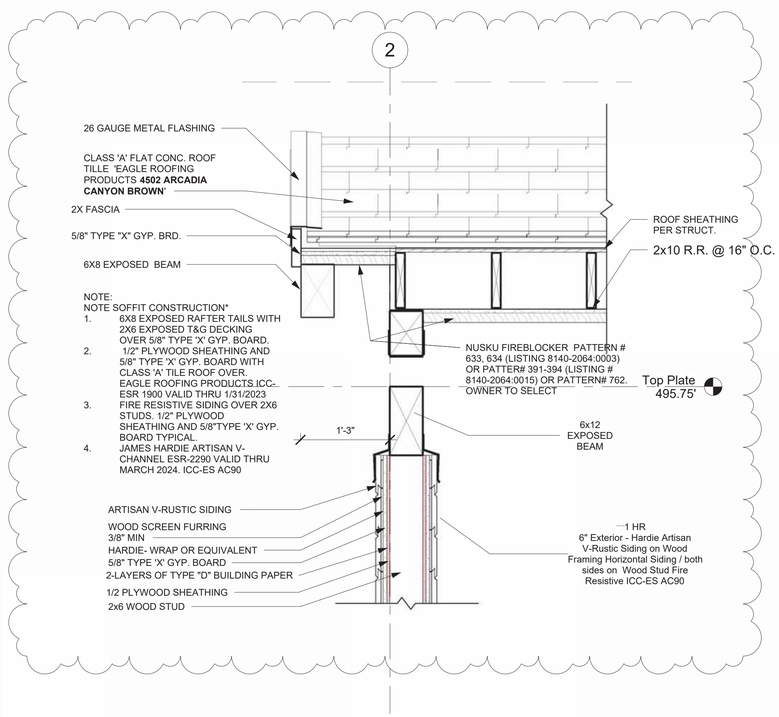

1 Rake Detail
1" = 1'-0"

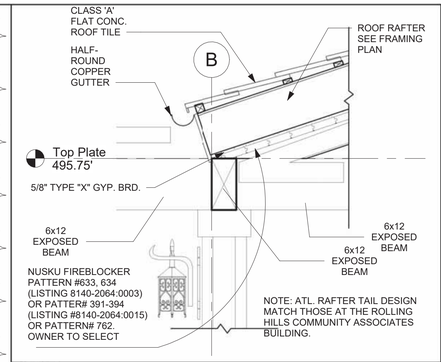

3 Eave Detail
3/4" = 1'-0"

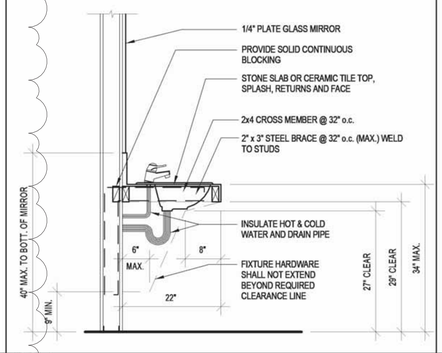

4 H.C. Lavatory
SCALE: 3/4"=1'-0"

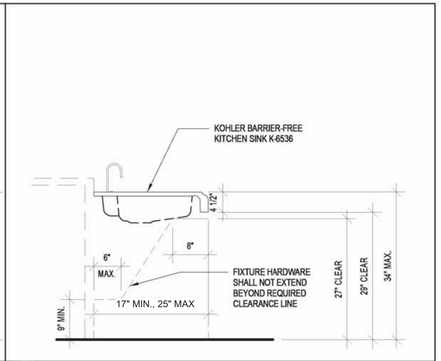

5 Barrier-Free Kitchen Sink
SCALE: 3/4"=1'-0"

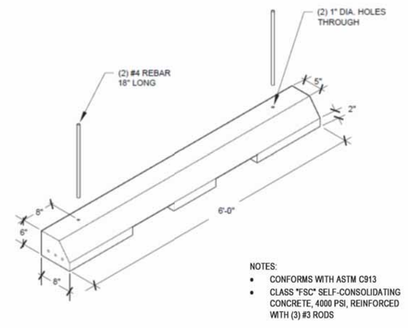

8 Wheel Stop
SCALE: N.T.S

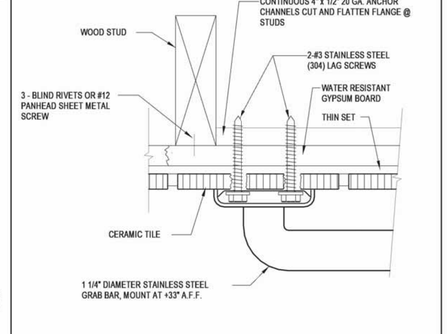

9 Grab Bar
SCALE: 6"=1'-0"

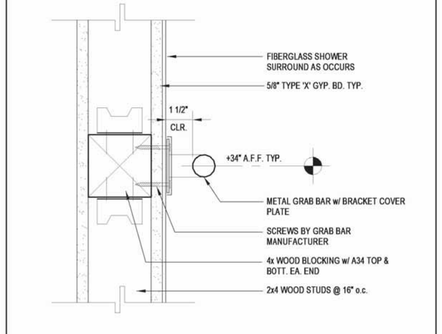

10 Grab Bar Backing
SCALE: 3"=1'-0"

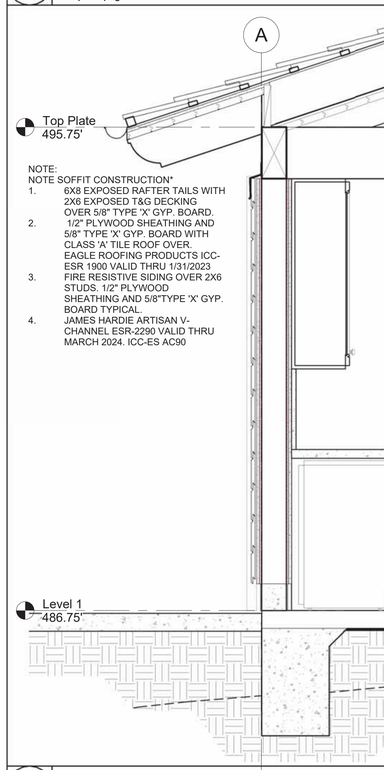

16 Eave Detail 1
3/4" = 1'-0"

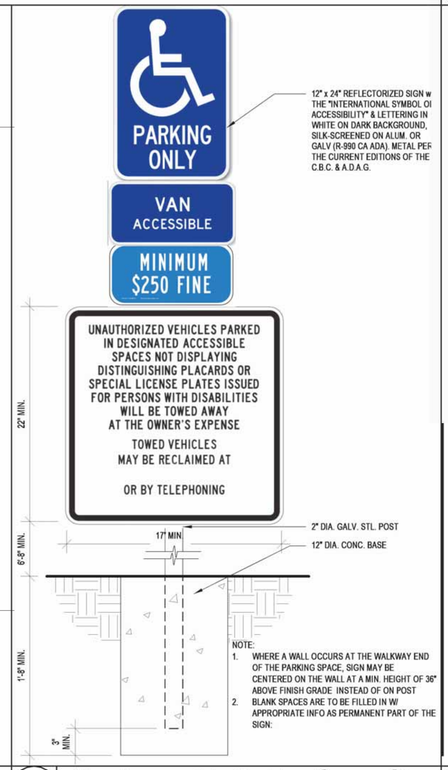

17 Van-Accessible Parking Space Sign
SCALE: N.T.S

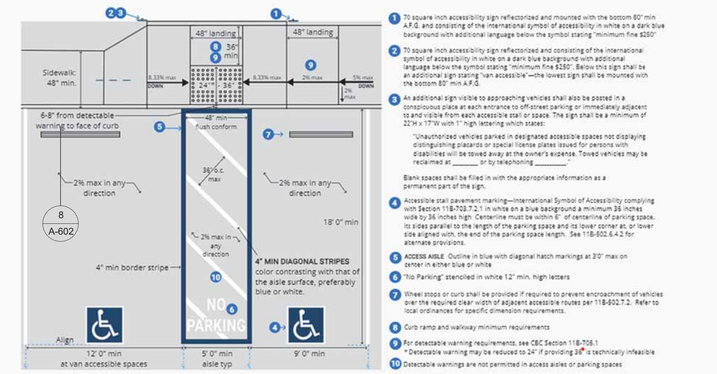

18 Accessible Parking Stall
Scale: N.T.S

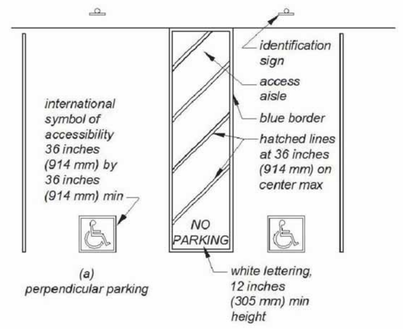

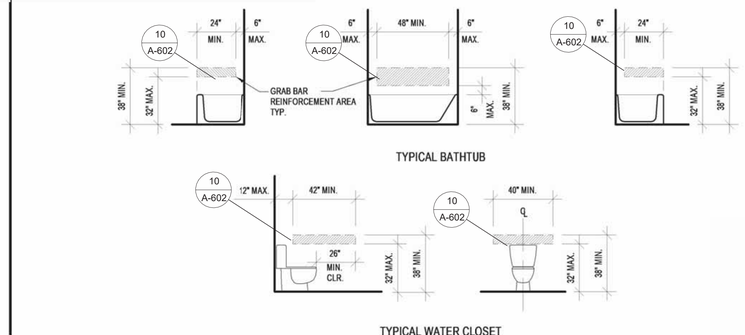

19 Grab Bar Reinforcement Areas
SCALE: 1/4"=1'-0"

OBELISK ARCHITECTS
A Professional Corporation
3800 PACIFIC COAST HIGHWAY
TORRANCE, CALIFORNIA 90505
obeliskarc.com
310.373.0810 fax
310.373.3568 tel

PROJECT

Rolling Hills Community Association

#2 Portuguese Bend Road
Rolling Hills, Ca. 90274

REVISIONS

No.	Description	Date
1	PLANNING CORRECTIONS	8-17-2023

BUILDING AND SAFETY DIVISION
Department of Public Works
APPROVED
UNDER LOS ANGELES COUNTY CODE TITLES 26, 30 AND 31
by
PUBLIC WORKS
03/27/2024 2:05:07 PM
This set of plans and specifications shall be kept at the job site at all times and it is unlawful to make any changes, modifications or alterations to these plans or specifications without the prior written permission of the Building Official. The stamping of this set of plans and specifications SHALL NOT, under any circumstances, be deemed to permit or to be an approval of any work or activity that violates any provisions of any County Ordinance or State Law.

PROJECT NUMBER
Project Number

DATE
March 19, 2024

STAMP



SHEET TITLE

Architectural Details

THIS DOCUMENT IS FURNISHED IN CONFIDENCE FOR THE LIMITED PURPOSE OF EVALUATION, BIDDING OR REVIEW. THIS DOCUMENT AND ITS CONTENTS MAY NOT BE USED FOR ANY OTHER PURPOSE AND MAY NOT BE REPRODUCED OR DISCLOSED TO OTHERS WITHOUT THE PRIOR WRITTEN AUTHORIZED CONSENT OF OBELISK ARCHITECTS ALL RIGHTS RESERVED (C) 1997–2022

SHEET
1
A-602

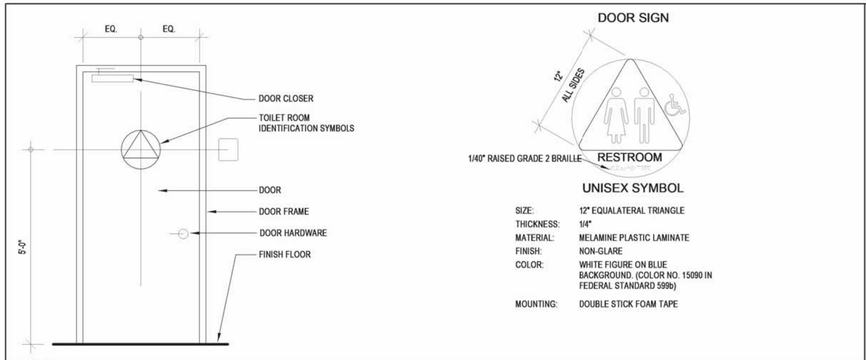

1 **Toilet Room Door Identification Symbols**
SCALE: N.T.S

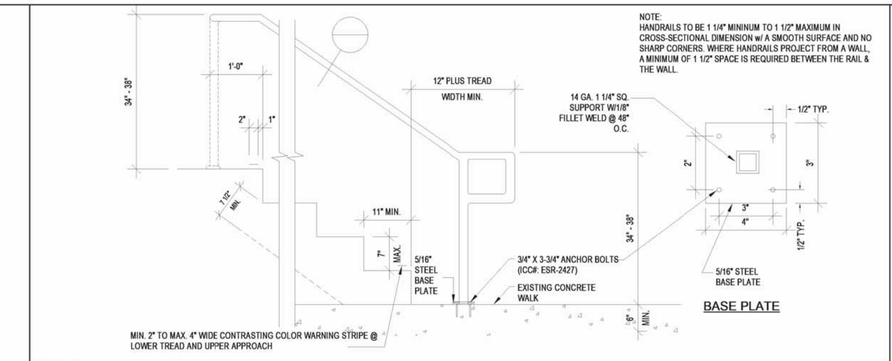

3 **Stair / Handrail Layout**
SCALE: 3/4"=1'-0"

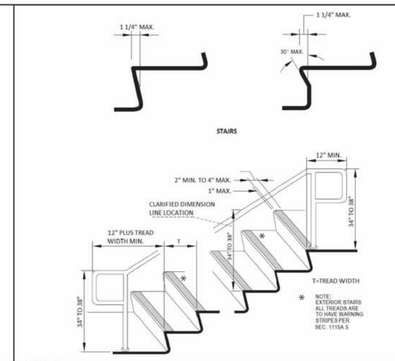

5 **Warning Striping / Nosing**
SCALE: N.T.S.

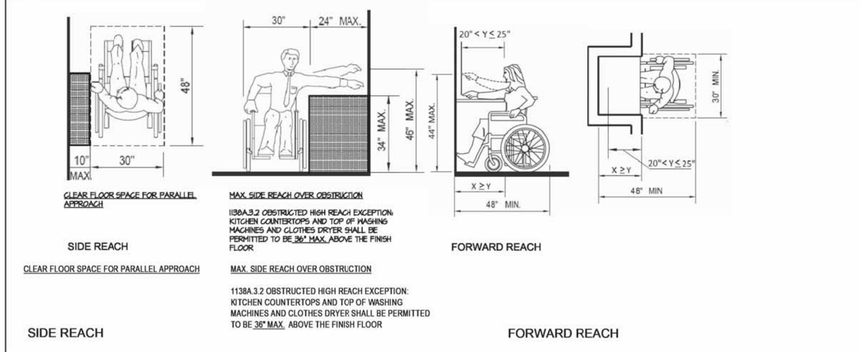

6 **Accessible Reach Ranges**
SCALE: 1/4"=1'-0"

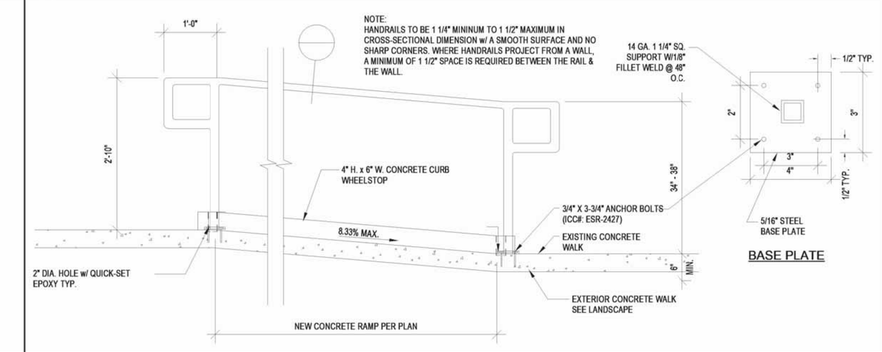

8 **Ramp Section / Handrail**
SCALE: 3/4"=1'-0"

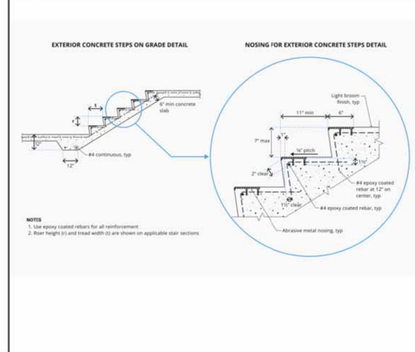

10 **STAIR NOSING DETAIL**
3/4" = 1'-0"

NOTES:

1. THIS DRAWING SHOWS THE MOUNTING HEIGHTS OF THE STANDARD ACCESORIES. SEE PLANS FOR MORE INFORMATION. THE ACTIVE PART OF EACH ACCESSORY SHALL BE LOCATED 40" FROM FLOOR

2. INSULATE THE HOT WATER AND DRAIN PIPES UNDER EACH ACCESSIBLE LAVATORY.

3. THERE SHALL BE NO SHARP OR ABRASIVE SURFACES UNDER LAVATORIES.

4. FAUCET CONTROLS AT ACCESSIBLE LAVATORY SHALL BE OPERABLE WITH ONE HAND WITHOUT TIGHT GRASPING, PINCHING, OR TWISTING OF THE WRIST TO OPERATE.

5. ALL FIXTURES AND MECHANISMS SHALL MEET THE CURRENT CODES APPLICABLE TO THIS PROJECT

6. NO UNIT MAY PROTRUDE FROM THE WALL

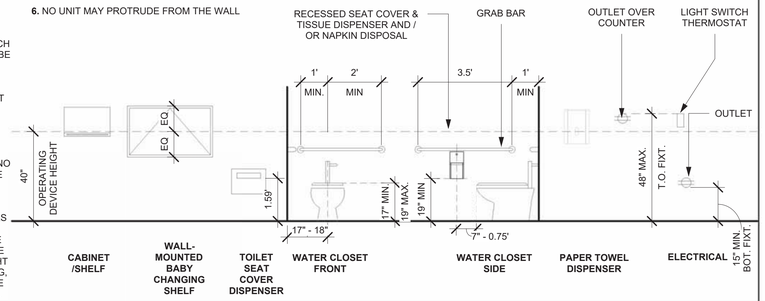

11 **ACCESSIBLITY FOR ACCESSORIES - STANDARD MOUNTING HTS**
3/8" = 1'-0"

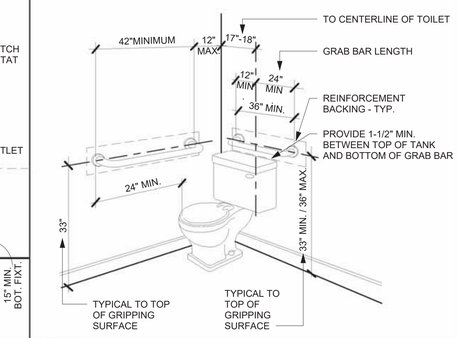

13 **GRAB BAR REINFORCEMENT1**
12" = 1'-0"

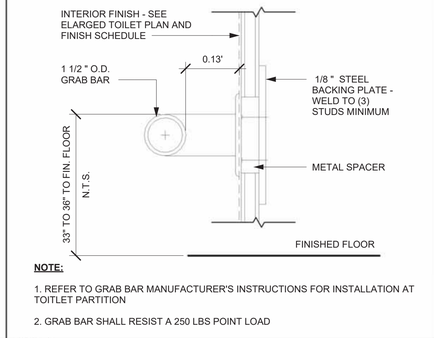

NOTE:

1. REFER TO GRAB BAR MANUFACTURER'S INSTRUCTIONS FOR INSTALLATION AT TOITLET PARTITION

2. GRAB BAR SHALL RESIST A 250 LBS POINT LOAD

14 **TOILET GRAB BAR**
6" = 1'-0"

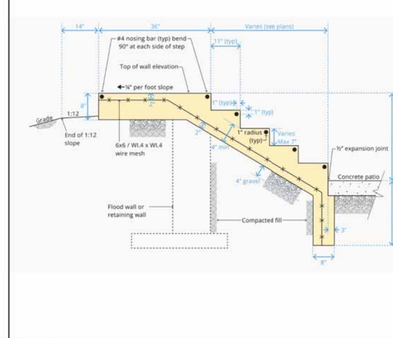

15 **Concrete Stairs on Grade**
3/4" = 1'-0"

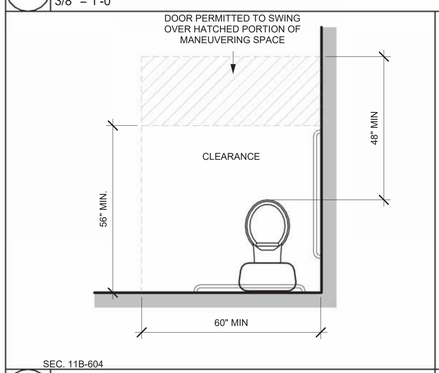

16 **ACC. TOILET CLEARANCE**
1/2" = 1'-0"

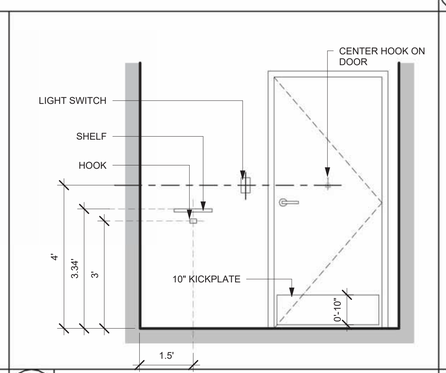

17 **TYPICAL ACC. R.R. @ DOOR**
1/2" = 1'-0"

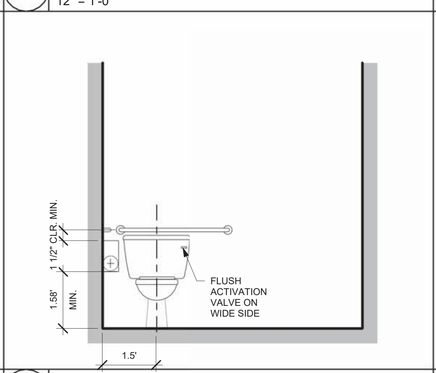

18 **TYPICAL ACC. R.R. @ FRONT**
1/2" = 1'-0"

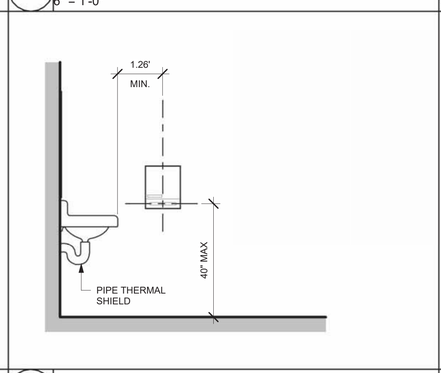

19 **TYPICAL ACC. R.R. @ SIDE 1**
1/2" = 1'-0"

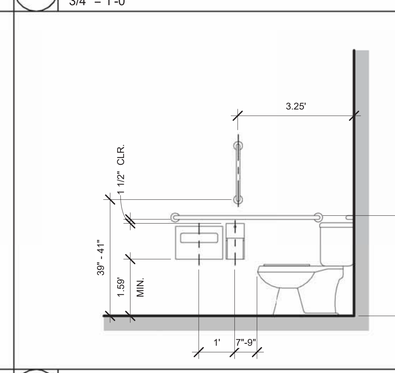

20 **TYPICAL ACC .R.R @ SIDE 2**
1/2" = 1'-0"

OBELISK ARCHITECTS
A Professional Corporation

3800 PACIFIC COAST HIGHWAY
TORRANCE, CALIFORNIA 90505
obeliskarc.com
310.373.0810 fax
310.373.3568 tel

PROJECT

Rolling Hills Community Association

#2 Portuguese Bend Road
Rolling Hills, Ca. 90274

REVISIONS

No.	Description	Date

BUILDING AND SAFETY DIVISION
Department of Public Works
APPROVED
UNDER LOS ANGELES COUNTY CODE
TITLES 26, 30 AND 31
PUBLIC WORKS
03/27/2024 2:05:07 PM
This set of plans and specifications must be kept at the job site at all times and it is unlawful to make any changes, modifications or alterations to these plans or specifications without the prior written permission of the building official. The stamping of this set of plans and specifications SHALL NOT, under any circumstances, be deemed to permit or to be an approval of any work or activity that violates any provisions of any County Ordinance or State Law

PROJECT NUMBER
Project Number

DATE
March 19, 2024

STAMP

REGISTERED PROFESSIONAL ARCHITECT
WAYNE R. BARWIN
EXP. 1-31-25
LIC# C26503
STATE OF CALIFORNIA

SHEET TITLE
Architectural Details

THIS DOCUMENT IS FURNISHED IN CONFIDENCE FOR THE LIMITED PURPOSE OF EVALUATION, BIDDING OR REVIEW. THIS DOCUMENT AND ITS CONTENTS MAY NOT BE USED FOR ANY OTHER PURPOSE AND MAY NOT BE REPRODUCED OR DISCLOSED TO OTHERS WITHOUT THE PRIOR WRITTEN AUTHORIZED CONSENT OF OBELISK ARCHITECTS ALL RIGHTS RESERVED (C) 1997–2022

SHEET
A-603

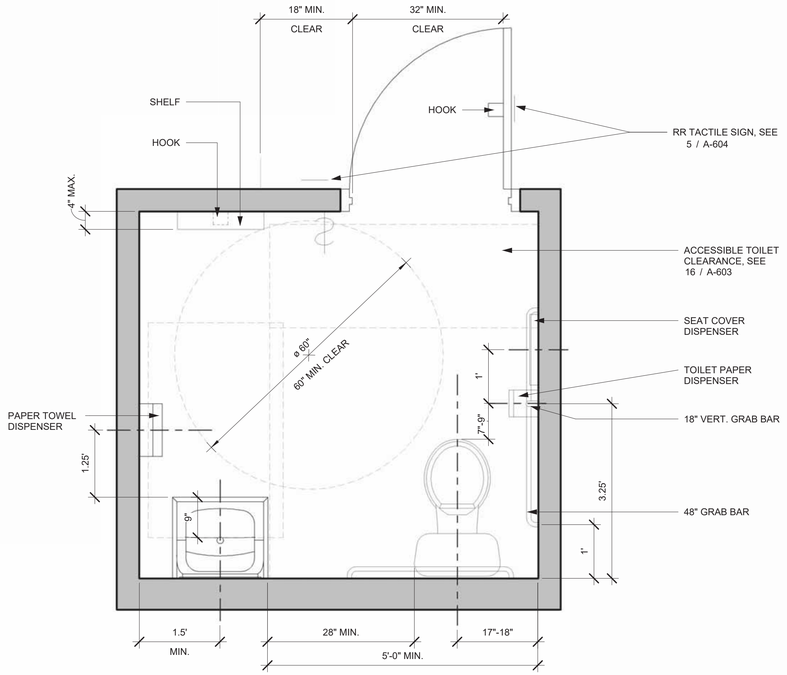

6 TYPICAL ACCESSIBLE RESTROOM PLAN
3/4" = 1'-0"

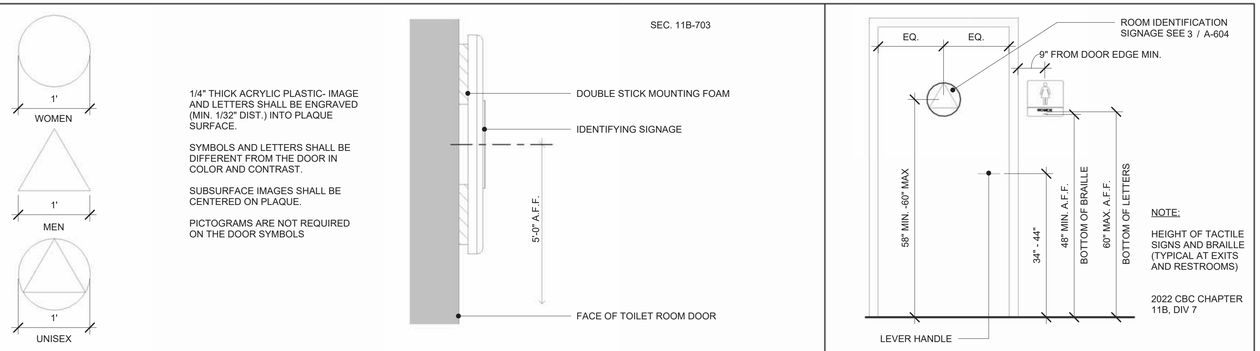

3 RESTROOM IDENTIFYING SIGNS
1" = 1'-0"

5 ACCESSIBLE R.R. SIGNAGE
12" = 1'-0"

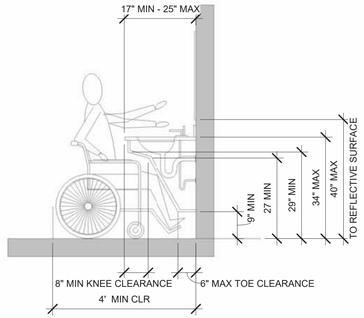

8 ACCESSIBLE LAVATORY
1/2" = 1'-0"

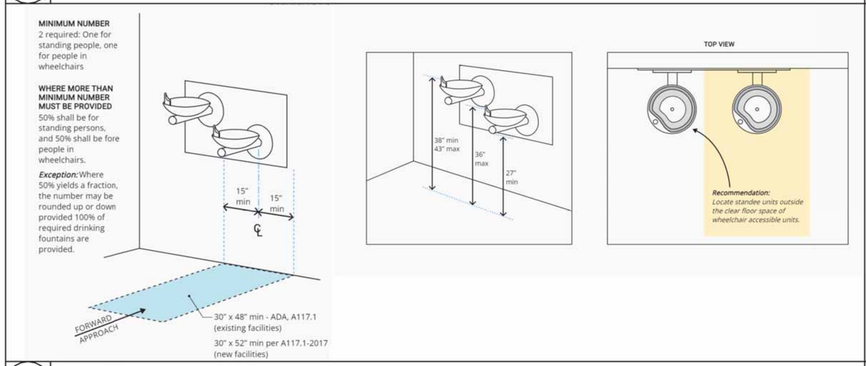

11 MULTI-PERSON ADA DRINKING FOUNTAIN
3/4" = 1'-0"

OBELISK ARCHITECTS
A Professional Corporation
3800 PACIFIC COAST HIGHWAY
TORRANCE, CALIFORNIA 90505
obeliskarc.com
310.373.0810 fax
310.373.3568 tel

PROJECT

Rolling Hills Community Association

#2 Portuguese Bend Road
Rolling Hills, Ca. 90274

REVISIONS

No.	Description	Date
2	PLANNING CORRECTIONS	3-19-2024

BUILDING AND SAFETY DIVISION
Department of Public Works
APPROVED
UNDER LOS ANGELES COUNTY CODE
TITLES 26, 30 AND 31
PUBLIC WORKS
03/27/2024 2:05:07 PM
This set of plans and specifications shall be kept at the job site at all times and it is unlawful to make any changes, modifications or alterations to these plans and specifications without the prior written permission of the Building Official. The stamping of this set of plans and specifications SHALL NOT, under any circumstances, be deemed to permit or to be an approval of any work or activity that violates any provisions of any County Ordinance or State Law

PROJECT NUMBER
Project Number

DATE
March 19, 2024

STAMP

REGISTERED PROFESSIONAL ARCHITECT
WAYNE R. BANNON
EXP 1-31-25
LIC# C26503
STATE OF CALIFORNIA

SHEET TITLE

Architectural Details

THIS DOCUMENT IS FURNISHED IN CONFIDENCE FOR THE LIMITED PURPOSE OF EVALUATION, BIDDING OR REVIEW. THIS DOCUMENT AND ITS CONTENTS MAY NOT BE USED FOR ANY OTHER PURPOSE AND MAY NOT BE REPRODUCED OR DISCLOSED TO OTHERS WITHOUT THE PRIOR WRITTEN AUTHORIZED CONSENT OF OBELISK ARCHITECTS ALL RIGHTS RESERVED (C) 1997–2022

SHEET
A-604

3/19/2024 4:42:11 PM H:\Rolling Hills Cabana Project\REVIT FILES\CITY OF ROLLING HILLS COMMUNITY ASSOC.rvt

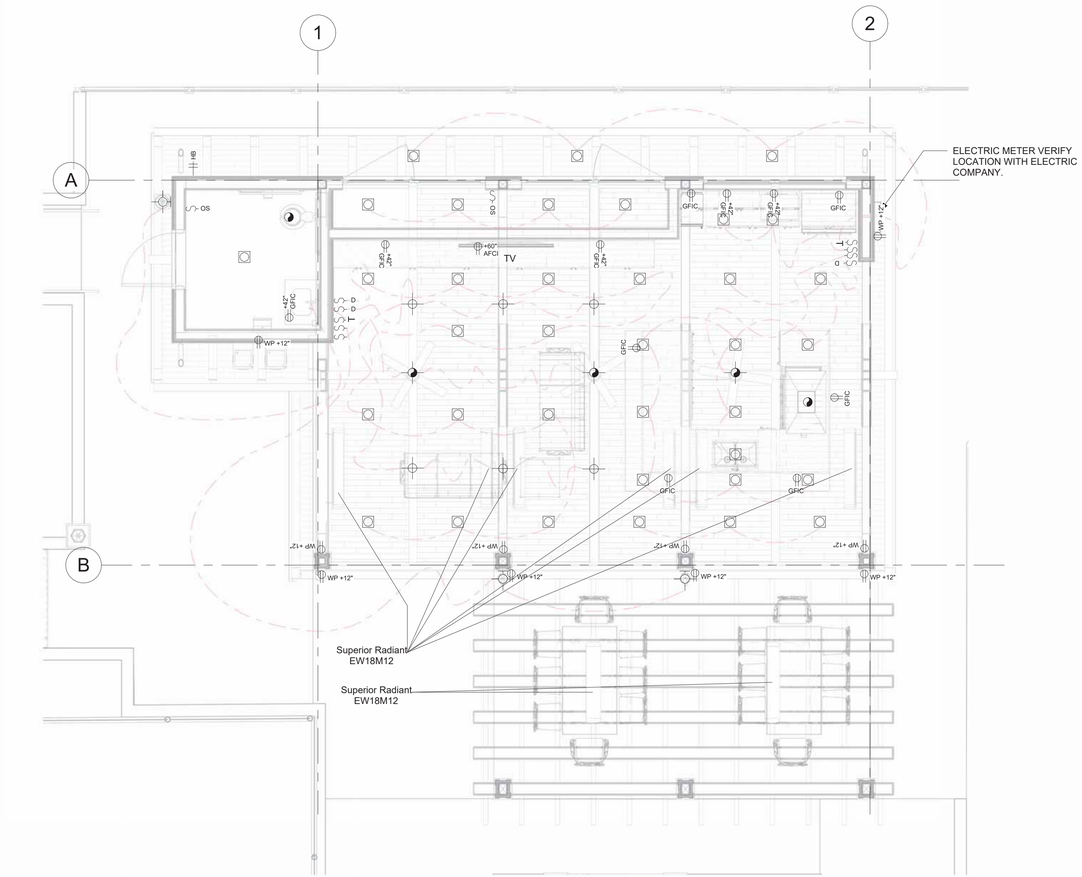

Level 1 - Electrical Plan

1/4" = 1'-0"

ELECTRICAL NOTES:

1. ALL BATHROOM RECEPTACLES SHALL BE SERVED BY DEDICATED 20 AMP. CIRCUIT PER CEC ARTICLE 210.11(c)3.
2. AT LEAST ONE 20 AMP BRANCH CIRCUIT SHALL BE PROVIDED TO SUPPLY LAUNDRY RECEPTACLE OUTLETS. SUCH CIRCUITS SHALL HAVE NO OTHER OUTLETS. (210.11 (C)(2) CEC).
3. RECEPTACLES ON THE KITCHEN COUNTER SHALL BE STARTED WITHIN 24" OF THE THE WALL OR COUNTER EDGE AND SPACED NOT MORE THAN 48" O.C. (N.E.C. SECT. 210-52 (c))
4. GROUND FAULT CIRCUIT INTERRUPTER (GFCI) RECEPTACLE PROTECTION IS REQUIRED IN THE -BATH, GARAGE, OUTDOORS, UNDERFLOOR SPACE, KITCHEN COUNTERS, UNFINISHED BASEMENTS AND LAUNDRY/UTILITY/WET BAR SINKS (WHERE RECEPTACLE IS WITHIN 6FT OF THE OUTSIDE SINK EDGE). (210.52 CEC)
5. ALL BEDROOM RECEPTACLES SHALL BE PROTECTED BY AN ARC-FAULT CIRCUIT INTERRUPTER LISTED TO PROVIDE PROTECTION OF THE ENTIRE BRANCH CIRCUIT PER CEC ARTICLE 210-12(B).
6. ALIGN CONVENIENT OUTLETS, & SWITCHES WITHIN 32"
7. TWO 20-AMP SMALL APPLIANCE BRANCH CIRCUITS SERVING THE KITCHEN COUNTER RECEPTACLES SHALL HAVE NO OTHER OUTLETS PER CEC ARTICLE 210.52 (b).
8. LIGHTING IN BATHROOMS, GARAGES, LAUNDRY AND UTILITY ROOMS MUST BE HIGH EFFICACY LIGHTING OR HAVE OCCUPANCY SENSORS.
9. FLUORESCENT LIGHTS RATED AT NOT LESS THAN 40/LUMENS PER WATT FOR GENERAL LIGHTING IN KITCHENS AND IN BATHROOMS AS PER TITLE 24.
10. ALL LIGHTING IN BATHROOMS, THE UTILITY ROOM, THE LAUNDRY ROOM, THE GARAGE AND POWDER ROOM SHALL BE FLUORESCENT LIGHTING FIXTURE UNLESS LIGHTINGS ARE CONTROLLED WITH MOTION SENSOR.
11. MAXIMUM 50% OF LIGHTING WATTAGE IN THE KITCHEN MUST BE NON-HIGH EFFICIENCY LIGHTING & COMPLETE CF-2R-LTG-01-E AND CF-2R-T-LTG-02-E
12. ALL INCANDESCENT LIGHTING FIXTURES RECESSED INTO INSULATED CEILINGS MUST BE APPROVED FOR ZERO CLEARANCE INSULATION COVER (I.C.) BY UNDERWRITERS LABORATORIES OR OTHER TESTING/RATING LABORATORIES AS PER TITLE 24.
13. PROVIDE COVER AND LOCATE LIGHT FIXTURES 6" AWAY FROM SHELVES IN CLOSETS (PER NEC SECT. 410-8)
14. ALL LIGHTING IN THE BUILDING EXCEPT CLOSETS LESS THAN 70 SQUARE FEET IN AREA SHALL BE FLUORESCENT LIGHTING FIXTURE UNLESS LIGHTINGS ARE CONTROLLED WITH MOTION SENSOR.
15. OUTDOOR LIGHTING MUST BE ON THE BUILDING AND BE HIGH EFFICACY OR HAVE PHOTO-CONTROL / MOTION SENSORS.
16. ALL WINDOW AND SLIDING GLASS DOOR ASSEMBLIES MUST BE DUAL-PANED AND ALUMINUM FRAME OR HAVE A MAXIMUM U-VALUE OF 0.67.
17. A GAS CONNECTION AND GFC/WP ELECTRICAL CONNECTION SHALL BE PROVIDE FRO AT THE SITE INDICATED FOR A HOT TUB IN THE BACKYARD.
18. COOKING EQUIPMENT MUST BE LISTED FOR RESIDENTIAL USE.
19. PROVIDE BONDING WIRE TO METAL WATER SUPPLY SYSTEM, OR GROUND ROD (NEC 250-80(a) & 83).
20. SEPARATE EARLY WARNING SMOKE DETECTION SYSTEMS ARE REQUIRED.
21. IN NEW CONSTRUCTION SMOKE ALARM SHALL RECEIVE THEIR PRIMARY POWER SOURCE FROM THE BUILDING WIRING AND SHALL BE EQUIPPED WITH BATTERY BACK UP AND LOW BATTRY SIGNAL. (907.2.10.1.3, 908.2.10.5.2). IN EXISTING CONSTRUTION, SMOKE ALARMS (i.e., SMOKE DETECTORS) MAY BE BATTERY OPERATED. (CBC 907.2.10.1.3, 908.2.10.5.2)
22. SMOKE ALARMS (i.e., SMOKE DETECTORS) SHALL BE INSTALLED AND MAINTAINED AT ALL OF THE FOLLOWING LOCATIONS: (CBC 907.2.10.1.2). PROVIDE ONE CO2 DETECTOR TO MEET CODE.
    a. IN EACH ROOM USED FOR SLEEPING PURPOSES.
    b. ON THE CEILING OR WALL OUTSIDE IMMEDIATE VICINITY OF SLEEPING ROOM.
23. A PERMIT FOR ALTERATIONS, REPAIRS, OR ADDITIONS, EXCEEDING $1,000 SHALL REQUIRE THE INSTALLATION OF SMOKE DETECTORS. (CBC 907.2.10.5.2, HSC 13113.7)
24. WHERE MORE THAN ONE SMOKE ALARM IS REQUIRED TO BE INSTALLED, IT SHALL BE INTERCONNECTED IN SUCH A MANNER.
25. ALL ELECTRICAL, TELEPHONE, CABLE TELEVISION SYSTEM AND SIMILAR SERVICE WIRES AND CABLES SHALL BE INSTALLED UNDER GROUND FOR ALL NEW BUILDINGS.
26. ANY SATELLITE DISH ANTENNAS AND/OR SIMILAR EQUIPMENT SHALL COMPLY WITH THE REQUIREMENTS OF SECT. 17.46.240 OF THE ZONING ORDINANCE
27. CONDUIT SHALL BE INSTALLED IN EACH UNIT FOR CABLE TELEVISION.
28. ALL NEW PLUMBING FIXTURES SHALL BE CERTIFIED LOW FLOW FIXTURES.
29. THE ADDRESS SHALL BE CONSPICUOUSLY DISPLAYED ON THE STREET SIDE OF THE BUILDING WITH EXTERNALLY OR INTERNALLY LIT NUMBERS.
30. NO PENETRATION IN CEILING USE ACOUSTI BLOK @ CL'G FIBER BOARD / GLUE OVER GYPSUM USE NO SCREWS.

HVAC NOTES:

31. PILOT LIGHTS TO BE 18" ABOVE GARAGE SLAB.
32. EXHAUST FAN IN THE BATHROOM CAPABLE OF PROVIDING 4 COMPLETE AIR CHANGES PER HOUR. VENT EXHAUST FANS TO OUTSIDE AIR. (SEE ELECTRICAL PLANS)
33. THE NEW OUTPUT CAPACITY OF THE GAS FURNACES IN THE BUILDING MUST BE LESS THAN 45,000 BTU/HR. OR HEAT-LOSS CALCULATIONS MUST BE PROVIDED.
34. ALL FAN SYSTEMS EXHAUSTING AIR FROM THE BUILDING ENVELOPE TO THE OUTSIDE SHALL BE PROVIDED WITH BACK-DRAFT DAMPERS.
35. RE-CIRCULATION HOT WATER PIPING IN ATTICS, GARAGES, CRAWL SPACES OR UNHEATED SPACES SHALL BE INSULATED.
36. AN APPROVED SEISMIC GAS SHUT OFF VALVE WILL BE INSTALLED ON THE FUEL GAS LINE ON THE DOWN STREAM SIDE OF THE UTILITY METER AND BE RIGIDLY CONNECTED TO THE EXTERIOR OF THE BUILDING OR STRUCTURE CONTAINING THE FUEL GAS PIPING.
37. WATER HEATER MUST BE STRAPPED TO WALL AS PER UPC SECTION 510.5 (ONE AT 1/3 FROM THE TOP AND ONE AT 1/3 FROM THE BOTTOM OF THE WATER HEATER).
38. APPLIANCES SUCH AS KITCHEN SINK FOOD GRINDERS, DISHWASHERS, MICROWAVE OVENS, TRASH COMPACTORS, WASHING MACHINES, DRYERS, REFRIGERATORS, FREEZERS, AIR CONDITIONERS, FAUs BUILT-IN HEATERS OR ANY FIXED APPLIANCE WITH MOTOR LARGER THAN 1/4 HP SHALL BE ON A SEPARATE BRANCH CIRCUIT SUPPLIED BY A MIN. NUMBER 12 AWG WIRE.
39. PROVIDE AN APPROVED SPARK ARRESTERFOR THE CHIMNEY OF A FIREPLACE, STOVE, OR BARBECUE.
40. INSULATION OF HEATING AND COOLING DUCTS,MINIMUM R-6, IN ACCORDANCE WITH REQUIREMENT OF CHAPTER 6 OF THE CALIFORNIA MECHANICAL CODE.

ELECTRICAL SYMBOLS

SYMBOL	DESCRIPTION
	STANDARD DUPLEX OUTLET (110 VOLTS)
	UNDER CABINET OUTLET
GFIC	STANDARD DUPLEX OUTLET WITH GROUND FAULT CIRCUIT INTERRUPTER
AFIC	STANDARD DUPLEX OUTLET WITH ARC FAULT CIRCUIT INTERRUPTER
WP	WATERPROOF STANDARD DUPLEX OUTLET WITH G.F.C.I.
220	220 VOLT HARDWIRE JUNCTION
1/2 HOT	HALF-HOT DUPLEX OUTLET
	QUADRUPLEX RECEPTACLE OUTLET
	DUPLEX FLOOR OUTLET
S	SINGLE POLE SWITCH
S3	3-WAY SWITCH
S4	4-WAY SWITCH
SA	AIR SWITCH
SD	SINGLE POLE SWITCH WITH DIMMER CONTROL
SOS	SINGLE POLE SWITCH WITH OCCUPANCY SENSOR
ST	SWITCH ON TIMER
SFL	SWITCH FOR LOG LIGHTER @ F.P.
	SURFACE MOUNTED INCANDESCENT LIGHT FIXTURE
	CEILING HUNG PENDANT FIXTURE
	CEILING HUNG CHANDELIER (BY OWNER)
	CEILING FAN WITH LIGHT PROVIDE ADDED WIRE & BLOCKING
	WALL MOUNTED INCANDESCENT LIGHT FIXTURE
M	WALL MOUNTED & BE HIGH EFFICACY OR HAVE PHOTO-CONTROL MOTION SENSOR
	RECESS MOUNTED CEILING LIGHT FIXTURE (PROVIDE SPEC. FIXT. @ SLOPED CL'G.) 3" LED 2700K
	RECESSED EXTERIOR STEP LIGHT FIXTURE 8" ABOVE FLOOR OR TREAD NOSINGS
F OR FLUOR	FLUORESCENT FIXTURE
LED	LOW VOLTAGE FIXTURE / LED
VP	VAPOR PROOF FIXTURE
	CEILING MOUNTED 4 FT. FLUORESCENT LIGHT FIXTURE
	UNDER CABINET FLUORESCENT LIGHT FIXTURE
	ABOVE CABINET FLUORESCENT LIGHT FIXTURE
	TRACK LIGHT
	PIN LIGHT
W	WALL-WASH LIGHT FIXTURE (PROVIDE SPEC. FIXTURE @ SLOPED CEILING) 3" LED W/ ADJST. 2700K
1	FIXTURE TO BE SELECTED BY OWNER
2	GARDEN / PATH LIGHT
3	STEP, AISLE OR NIGHT LIGHT
4	PICTURE LIGHT
	FLOOD LIGHT
	HEAT LAMP
	EXHAUST FAN 50 CFM Min.
	EXHAUST FAN WITH LIGHT 50 CFM Min.
S	STATE FIRE MARSHALL APPROVED SMOKE DETECTOR
CMA	CARBOM MONOXIDE ALARM
	CHIMES
	TELEPHONE OUTLET
TV	TELEVISION ANTENNA TERMINAL WITH TELEPHONE JACK FOR SATELLITE
	DOOR BELL
T	THERMOSTAT
J	HARDWARE JUNCTION BOX, HARDWIRE
	200 AMP SERVICE PANEL
SA	SUPPLY AIR REGISTAR
RAG	RETURN AIR GRILL
FG	FUEL GAS
KEY	FIREPLACE KEY (LOOSE)
HB	HOSE BIBB
HB	HOSE BIBB WITH SHUT-OFF VALVE
WATER	WATER LINE
	1 HP GARBAGE DISPOSAL
	CENTRAL VACUUM HOSE CONECTION

OBELISK ARCHITECTS
A Professional Corporation

3800 PACIFIC COAST HIGHWAY
TORRANCE, CALIFORNIA 90505
obeliskarc.com
310.373.0810 fax
310.373.3568 tel

PROJECT

Rolling Hills Community Association

#2 Portuguese Bend Road
Rolling Hills, Ca. 90274

REVISIONS

No.	Description	Date

BUILDING AND SAFETY DIVISION
Department of Public Works
APPROVED
UNDER LOS ANGELES COUNTY CODE
TITLES 26, 30 AND 31
PUBLIC WORKS
03/27/2024 2:05:07 PM
This set of plans and specifications shall be kept at the job site at all times and it is unlawful to make any changes, modifications or alterations to these plans or specifications without the prior written permission of the Building Official. The stamping of this set of plans and specifications SHALL NOT, under any circumstances, be deemed to permit or to be an approval of any work or activity that violates any provisions of any County Ordinance or State Law.

PROJECT NUMBER
Project Number

DATE
March 19, 2024

STAMP

REGISTERED PROFESSIONAL ARCHITECT
IN GLENN R. BAKEWELL
STATE OF CALIFORNIA
EXP. 1-31-25
LIC# C26503

SHEET TITLE

Electrical Plan

THIS DOCUMENT IS FURNISHED IN CONFIDENCE FOR THE LIMITED PURPOSE OF EVALUATION, BIDDING OR REVIEW. THIS DOCUMENT AND ITS CONTENTS MAY NOT BE USED FOR ANY OTHER PURPOSE AND MAY NOT BE REPRODUCED OR DISCLOSED TO OTHERS WITHOUT THE PRIOR WRITTEN AUTHORIZED CONSENT OF OBELISK ARCHITECTS
ALL RIGHTS RESERVED (C) 1997~2022

SHEET

E-101

Attachment D

GOVERNING CODES:

1. THE DESIGN COMPLIES TO THE 2022 EDITION OF THE STATE OF CALIFORNIA BUILDING CODE AND AMENDMENTS BY THE LOCAL JURISDICTION.

DRAWING NOTES:

1. TYPICAL DETAILS SHALL BE USED WHERE NO SPECIFIC DETAIL OR SECTION IS REFERENCED. ALL DETAILS, SECTIONS, AND NOTES ON THE DRAWINGS ARE INTENDED TO BE TYPICAL AND SHALL, U.N.O.
2. NOTES AND DETAILS ON DRAWINGS SHALL TAKE PRECEDENCE OVER THESE GENERAL SPECIFICATIONS. DIMENSIONS FOR CONSTRUCTION SHALL NOT BE SCALED FROM THE DRAWINGS. PRINTED DIMENSIONS HAVE PRECEDENCE OVER SCALED DRAWINGS AND LARGE SCALE OVER SMALL SCALE.
3. THE CONTRACTOR SHALL VERIFY ALL DIMENSIONS, ELEVATIONS AND SITE CONDITIONS BEFORE STARTING WORK. WHERE ACTUAL CONDITIONS CONFLICT WITH THE DRAWINGS AND/OR SPECIFICATIONS, DISCREPANCIES OR OMISSIONS SHALL BE REPORTED TO THE ENGINEER OF RECORD PRIOR TO PROCEEDING WITH CONSTRUCTION.
4. THE CONTRACTOR SHALL ALLOW REASONABLE TIME FOR THE ENGINEER OF RECORD TO RESOLVE CONFLICTS AND/OR MAKE REVISIONS TO THE DRAWINGS AND/OR SPECIFICATIONS. REVISIONS TO THE DRAWINGS SHALL BE REVIEWED AND APPROVED BY THE BUILDING OFFICIAL.
5. THE DRAWINGS AND SPECIFICATIONS REPRESENT THE FINISHED STRUCTURE, UNLESS OTHERWISE SHOWN, THEY DO NOT INDICATE THE METHOD OF CONSTRUCTION.
6. THE STAMPED SET OF DRAWINGS AND SPECIFICATIONS SHALL BE KEPT AT THE JOB SITE AND SHALL BE AVAILABLE TO THE AUTHORIZED REPRESENTATIVES OF THE BUILDING AND SAFETY DEPARTMENT. THERE SHALL BE NO DEVIATION FROM THE APPROVED PLANS AND SPECIFICATIONS WITHOUT AN APPROVED CHANGE ORDER.
7. ALL SYMBOLS AND ABBREVIATIONS USED ON THE DRAWINGS ARE CONSIDERED TO BE CONSTRUCTION STANDARDS. IF CLARIFICATION IS REQUIRED, THE CONTRACTOR SHALL NOTIFY ENGINEER PRIOR TO PROCEEDING WITH THE WORK.
8. THE CONTRACTOR SHALL COORDINATE ALL STRUCTURAL WORK WITH THE ARCHITECTURAL, ELECTRICAL, MECHANICAL, PLUMBING, AND OTHER CONSULTANT DRAWINGS. NOTIFY THE ARCHITECT OF ANY DISCREPANCIES BEFORE PROCEEDING WITH ANY WORK.
9. REFER TO ARCHITECTURAL, ELECTRICAL, MECHANICAL, AND OTHER CONSULTANT'S DRAWINGS FOR DETAILS, CONDITIONS, PITS, TRENCHES, DEPRESSIONS, ROOF AND FLOOR OPENINGS, SLEEVE, ITEMS TO BE EMBEDDED OR ATTACHED TO STRUCTURAL ELEMENTS, ETC., NOT SHOWN ON STRUCTURAL DRAWINGS.

CONSTRUCTION NOTES:

1. THE CONTRACTOR SHALL BE FULLY RESPONSIBLE FOR METHODS OF CONSTRUCTION, WORKMANSHIP, AND JOB SAFETY. WORKMANSHIP AND MATERIALS INCLUDING FALSE WORK, BRACING, AND OTHER TEMPORARY ITEMS SHALL CONFORM TO THE GOVERNING CODES AND JOB SAFETY REQUIREMENTS PER OSHA STANDARDS. THE CONTRACTOR SHALL SUPERVISE/DIRECT ALL WORK AND SHALL BE SOLELY RESPONSIBLE FOR ALL CONSTRUCTION MEANS, METHODS, TECHNIQUES, SEQUENCES AND PROCEDURES.
2. CONSTRUCTION, INSPECTION AND PHYSICAL TESTING PROCEDURES SHALL CONFORM TO THE REQUIREMENTS OF THE GOVERNING CODES.
3. CONSTRUCTION LOADING SHALL NOT EXCEED THE DESIGN LIVE LOAD UNLESS SPECIAL SHORING IS PROVIDED. ALLOWABLE LOADS SHALL BE REDUCED IN AREAS WHERE THE STRUCTURE HAS NOT ATTAINED ITS FULL DESIGN STRENGTH.
4. CONTRACTOR SHALL PROVIDE A COPY OF SHORING PLANS TO THE ENGINEER FOR APPROVAL, A PERMIT MAY BE REQUIRED BY THE GOVERNMENT AGENCY.
5. ANY SUPPORT SERVICES PERFORMED BY THE ENGINEER DURING CONSTRUCTION SHALL BE DISTINGUISHED FROM CONTINUOUS AND DETAILED INSPECTION SERVICES WHICH ARE FURNISHED BY OTHERS. THESE SUPPORT SERVICES WHICH ARE FURNISHED BY THE ENGINEER WHETHER OF MATERIAL OR WORK, AND WHETHER PERFORMED PRIOR TO, DURING OR AFTER COMPLETION OF CONSTRUCTION, ARE PERFORMED SOLELY FOR THE PURPOSE OF ASSISTING IN QUALITY CONTROL AND IN ACHIEVING CONFORMANCE WITH CONTRACT DRAWINGS AND SPECIFICATIONS, BUT THEY DO NOT WARRANTEE CONTRACTOR'S PERFORMANCE AND SHALL NOT BE CONSTRUED AS SUPERVISION OF CONSTRUCTION.

CONCRETE:

1. ALL CONCRETE SHALL BE NORMAL WEIGHT CONCRETE U.N.O. STATEMENTS OF MIX DESIGN SHALL BE AS PER THE BUILDING CODE, SHALL BE PROVIDED BY AN APPROVED LABORATORY AND COPIES OF THE STATEMENT SHALL BE IN THE OFFICE OF THE BUILDING INSPECTOR AND AT THE BATCH PLANT PRIOR TO BATCHING OF CONCRETE AND AT THE JOB SITE PRIOR TO PLACING OF CONCRETE. SPECIAL INSPECTION REQUIRED FOR CONCRETE STRENGTH GREATER THAN 2500 PSI. CONCRETE SHALL HAVE THE FOLLOWING MINIMUM 28 DAYS STRENGTH, U.N.O. ON PLAN:
   - SLABS ON GRADE . . . . . 2500 PSI
   - CURBS, PIT WALLS & MISC CONCRETE . . . . 2500 PSI
   - CONTINUOUS WALL FOOTINGS . . . . . 2500 PSI
   - COLUMN FOOTINGS . . . . . 2500 PSI
   - STRUCTURAL SLABS & BEAMS . . . . . 3000 PSI
   - STRUC WALLS. . . . . 3000 PSI
   - COLUMNS . . . . . 4000 PSI
2. NORMAL WEIGHT CONCRETE SHALL BE 145 TO 155 POUNDS PER CUBIC FOOT. LIGHTWEIGHT CONCRETE SHALL BE 110 POUNDS PER CUBIC FOOT. MAXIMUM SLUMP SHALL BE 4", U.N.O.
3. CEMENT SHALL CONFORM TO ASTM C150, TYPE II CEMENT U.N.O. CEMENT TYPES SHALL NOT BE MIXED IN THE CONCRETE MIX. CALCIUM CHLORIDE SHALL NOT BE USED IN THE CONCRETE MIX. FINE AND COARSE AGGREGATE SHALL CONFORM TO ASTM C33. WHEN SPECIFIED, AIR-ENTRAINING ADMIXTURES SHALL COMPLY WITH ASTM C260. READY MIX CONCRETE SHALL BE MIXED AND DELIVERED IN ACCORDANCE WITH ASTM C94. CONCRETE MIX DESIGNS CONTAINING FLY ASH SHALL BE USED AND SHALL REPLACE 20% OF PORTLAND CEMENT BY VOLUME. FLY ASH SHALL CONFORM WITH ASTM C618.
4. MAXIMUM SIZE OF STONE AGGREGATE FOR SLABS SHALL BE 1" AND 1½" ELSEWHERE, U.N.O. SAND SHALL BE CLEAN, HARD, DURABLE, WASHED, FREE FROM SILT, LIME OR CLAY. MIXING WATER SHALL BE CLEAN AND FREE FROM INJURIOUS AMOUNTS OF OIL, ACIDS, ALKALIS, ORGANIC MATERIALS OR OTHER DELETERIOUS SUBSTANCES. CONCRETE MIX MAY CONTAIN A POLYMER BASED WATER REDUCING ADMIXTURE. THE MAXIMUM SLUMP OF CONCRETE SHALL NOT EXCEED 6" UNLESS OTHERWISE APPROVED BY THE ENGINEER.
5. FORM WORK SHALL COMPLY WITH STANDARD PUBLICATION (ACI 347) AND THE PROJECT SPECIFICATIONS. THE CONTRACTOR SHALL BE RESPONSIBLE FOR THE DESIGN, DETAILING, CARE, PLACEMENT AND REMOVAL OF THE FORM WORK AND SHORES. NO STAKES, STEEL OR WOOD WILL BE PERMITTED IN ANY CONCRETE POUR. SUSPEND FORMS FROM ABOVE THE POUR.
6. ALL CONCRETE SLABS SHALL BE CURED BY KEEPING CONTINUOUSLY WET FOR 7 DAYS AFTER POURING. THE CONTRACTOR SHALL BE RESPONSIBLE FOR THE CURING OF CONCRETE.
7. THE CONTRACTOR SHALL PROVIDE A LEVEL TOP SURFACE FOR ALL SLABS IN ACCORDANCE WITH THE LEVELNESS TOLERANCE REQUIRED FOR ALL FINISHES, PARTITIONS, BUILT-IN CABINETS AND COUNTERS, ETC.
8. PROVIDE NON-SLIP FINISH ON ALL CONCRETE STAIR TREADS, EXPOSED FLAT WORK, AND WHERE SPECIFIED ON WORKING DRAWINGS.
9. LOCATION OF CONSTRUCTION JOINTS OR POUR JOINTS SHALL BE AS SHOWN ON PLANS OR AS APPROVED BY THE STRUCTURAL ENGINEER PRIOR TO POURING CONCRETE. CONTROL JOINTS SHALL BE INSTALLED SO THE SLAB'S LENGTH TO WIDTH RATIO IS NOT MORE THAN 1 TO 2, MAXIMUM LENGTH SHALL BE 15 FEET. CONTROL JOINTS SHALL BE COMPLETED WITHIN 12 HOURS OF CONCRETE PLACEMENT AND THE JOINT DEPTH SHALL BE ¼ OF THE SLAB THICKNESS.
10. FINAL SLABS SHALL BE LEVEL TO WITHIN ⅜" WHEN MEASURED WITH A 10 FEET STRAIGHT EDGE AND WITHIN ½" IN ANY 30 FEET BAY. THE REQUIRED CAMBER FOR STRUCTURAL SLABS MAY VARY FROM L/140 TO L/480. THE EXACT CAMBER WILL BE DETERMINED BY THE ENGINEER AFTER THE SHOP DRAWINGS FOR SLAB SHORING HAVE BEEN SUBMITTED.
11. PIPES, DUCTS, SLEEVES, CHASES, ETC. SHALL NOT BE PLACED IN SLABS, BEAMS, OR WALLS UNLESS SPECIFICALLY SHOWN OR NOTED ON PLANS. CONTRACTOR SHALL OBTAIN APPROVAL FOR INSTALLATION OF ANY ADDITIONAL PIPES, DUCTS, ETC. REFER TO ARCHITECTURAL AND MECHANICAL PLANS FOR LOCATIONS OF ALL PIPES, DUCTS, CHASES, ETC. ALL SUSPENDED EQUIPMENT TO BE PROVIDED WITH ICC APPROVED LATERAL OR SWAY BRACING. ALL SLEEVES NOT SPECIFICALLY SHOWN ON THE DRAWINGS SHALL BE LOCATED BY THE TRADES INVOLVED AND SHALL BE APPROVED BY THE STRUCTURAL ENGINEER.

EPOXY ANCHORS AND DOWELS: (SIMPSON SET-XP EPOXY, ICC-ESR 2508)

1. BOLTS AND REINFORCEMENT EMBEDDED INTO CONCRETE OR MASONRY WITH EPOXY SHALL BE INSTALLED PER MANUFACTURER'S RECOMMENDATIONS AND APPROVED ICC REPORTS. ALL EPOXY ADHESIVE INSTALLATIONS SHALL HAVE CONTINUOUS SPECIAL INSPECTION PER THE CURRENT CODE REQUIREMENTS.

WOOD AND CARPENTRY:

1. LUMBER SHALL BE COAST REGION DOUGLAS FIR-LARCH GRADE WITH A MAXIMUM MOISTURE CONTENT OF 19% AND SHALL CONFORM TO THE FOLLOWING GRADES, (U.N.O.)
   - BEAMS AND POSTS SHALL BE DF #1, (U.N.O.)
   - JOIST AND RAFTERS SHALL BE DF #2, (U.N.O.)
   - FRAMING SUCH AS STUDS, FURRING AND BLOCKING SHALL BE DF #2, (U.N.O.)
   - SILL PLATES OR PRESSURE TREATED LUMBER SHALL BE DF #1. (U.N.O.)
2. PLYWOOD SHEATHING SHALL BE DOUGLAS FIR PLYWOOD PLIES WITH EXTERIOR GLUE CONFORMING TO THE LATEST PRODUCT STANDARDS (PS-1-09 OR PS-2-10) BY THE U.S. DEPARTMENT OF COMMERCE.
3. CONNECTIONS LISTED IN THE "NAILING SCHEDULE" ARE MINIMUM REQUIREMENTS FOR BOX OR COMMON WIRE NAILS, U.N.O. WHERE POSSIBLE, NAILS SHALL BE DRIVEN PERPENDICULAR TO THE GRAIN INSTEAD OF TOE NAILS. USE GALVANIZED NAILS FOR PRESSURE TREATDE WOOD. (TABLE NO. 2304.10.1).
4. STEEL HARDWARE AND CONNECTORS SHALL BE SIMPSON OR OTHER LISTED MAKE APPROVED BY THE BUILDING OFFICIAL. FULL NAILING OR BOLTING SHALL BE USED ON SPECIFIED HARDWARE, (U.N.O.)
5. MACHINE BOLT HOLES IN WOOD MEMBERS SHALL BE DRILLED 1/32 TO 1/16" OVERSIZED. LAG BOLTS IN WOOD MEMBERS SHALL BE PRE DRILLED WITH A LEAD HOLE 40% TO 70% OF THREADED SHANK DIAMETER AND FULL DIAMETER FOR SMOOTH SHANK PORTION. A STEEL WASHER SHALL BE PROVIDED UNDER ALL BOLT HEADS AND NUTS THAT BEAR UPON WOOD. BOLTS SHALL BE ASTM A-307 OR BETTER.
6. HOLES AND NOTCHES IN WOOD MEMBERS, UNLESS OTHERWISE DETAILED OR APPROVED BY THE ENGINEER, SHALL MEET THE FOLLOWING REQUIREMENTS: HOLES SHALL BE LOCATED ON THE CENTER OF THE MEMBER OR AT LEAST 2" FROM THE TOP OR BOTTOM OF THE MEMBER; THE DIAMETER OF THE HOLE SHALL NOT EXCEED 1/3 THE DEPTH OF THE MEMBER; NOTCHES IN THE TOP OR BOTTOM OF MEMBERS SHALL NOT EXCEED 1/10 THE DEPTH OF THE MEMBER AND SHALL NOT BE LOCATED IN THE MIDDLE THIRD OF THE SPAN; BEAMS OR JOISTS MAY BE NOTCHED AT THE ENDS WHERE THE NOTCH DOES NOT EXCEED 1/4 OF THE BEAM DEPTH.
7. CUTTING AND NOTCHING OF STUDS: STUDS IN EXTERIOR WALLS AND BEARING PARTITIONS MAY BE CUT OR NOTCHED TO A DEPTH NOT EXCEEDING 25% OF ITS WIDTH. CUTTING OR NOTCHING OF STUDS IN NONBEARING PARTITIONS SHALL NOT EXCEED 40% OF THE WIDTH.
8. BORED HOLES IN STUDS: A HOLE NOT GREATER IN DIAMETER THAN 40% OF STUD WIDTH MAY BE BORED IN ANY WOOD STUD. BORED HOLES NOT GREATER THAN 60% OF THE WIDTH OF THE STUD ARE PERMITTED IN NONBEARING PARTITIONS. IN NO CASE SHALL THE EDGES OF THE BORED HOLE BE NEARER THAN 5/8" TO THE EDGE OF THE STUD. BORED HOLES SHALL NOT BE LOCATED AT THE SAME SECTION OF STUD AS A CUT OR NOTCH.
9. WOOD MEMBERS BOLTED TO CONCRETE, MASONRY OR STEEL SHALL HAVE A MINIMUM OF 2 BOLTS PER MEMBER, WITH AT LEAST ONE BOLT WITHIN 12" FROM EACH MEMBER END. WOOD IN CONTACT WITH CONCRETE OR MASONRY WITHIN 48" OF THE GROUND SHALL BE PRESSURE TREATED (P.T., AWPA STANDARD U1 & M4). FASTENERS (< 0.5" in ø) IN CONTACT W/ P.T. WOOD SHALL BE HOT DIPPED GALVINEZED PER ASTM F1667.
10. STUD PARTITION WALLS AND JOISTS CONTAINING PLUMBING, HEATING OR OTHER PIPES SHALL BE FRAMED TO GIVE PROPER CLEARANCE FOR THE PIPING. WHERE A PARTITION CONTAINING SUCH PIPING RUNS PARALLEL TO FLOOR JOISTS, THE JOIST UNDERNEATH SUCH PARTITION SHALL BE DOUBLED AND SPACED TO PERMIT PASSAGE OF SUCH PIPES.
11. ENGINEERED WOOD SHALL BE FABRICATED BY A CITY APPROVED LICENSED FABRICATOR. TRUSSJOIST (TJI) SHALL BE MANUFACTURED BY WEYERHAEUSER, PER REPORT ICC-ESR-1153. PARALLAM BEAMS (PSL) SHALL BE MANUFACTURED BY WEYERHAEUSER w/ E=2,000,000 PSI, PER REPORT ICC-ESR-1387.
12. DUE TO SHRINKAGE OF WOOD FRAMING IN MULTI-STORY BUILDINGS, ALL HOLES THROUGH JOISTS OR BEAMS SHALL BE OVERSIZED 1/4" TO ALLOW MOVEMENT OF THE RIGID CONDUIT.
13. JOIST HANGER, PURLIN HANGERS AND FRAMING CLIPS SHALL BE MANUFACTURED BY THE SIMPSON-TIE OR OTHER LISTED MAKE APPROVED BY THE BUILDING OFFICIAL. NAILS TO BE FURNISHED BY THE MANUFACTURER AND A NAIL SHALL BE PLACED IN EACH HOLE. FOR MAXIMUM CAPACITY, (U.N.O.)
14. ROOF/FLOOR SHEATHING: STAGGER PANEL END JOINTS AND LAY PANELS WITH FACE GRAIN ACROSS SUPPORTS. WHERE PANELS SPAN GREATER THAN 28", PANEL EDGES SHALL USE T&G SHT'G, APPROVED SHT'G. EDGE SUPPORT STEEL CLIPS, OR 2x SOLID BLOCKING (TABLE 2304.8(3)). NAILING TO BE INSPECTED BEFORE COVERING. USE BOUNDARY NAILING (B.N.) . @ ALL SHEARWALL, DRAGLINE, PERIMETER WALLS, RIDGES, VALLEYS, AND OPENINGS. SEE DETAILS FOR ADDITIONAL REQT'S.

FASTENING SCHEDULE (SUMMARIZED FROM TABLE 2304.10.1)

No	CONNECTION	FASTENING	LOCATION
1	JST. TO SILL OR GIRDER	(3) 8d COM'N.	TOE NAIL
2	BRIDGING TO JST.	(2) 8d COM'N.	TOE NAIL EACH END
3	1"x6" SUB FLOOR OR LESS TO EACH JST.	(2) 8d COM'N.	FACE NAIL
4	WIDER THAN 1"x6" SUBFLOOR TO EACH JST.	(3) 8d COM'N.	FACE NAIL
5	2" SUBFLOOR TO JST. OR GIRDER	(2) 16d COM'N.	FACE NAIL
6	SOLE PLT. TO JST. OR BLK'G.	16d COM'N. @ 16" O.C.	TYP. FACE NAIL
6.1	SOLE PLT. TO JST. OR BLK'G. AT BRACED WALL PANEL	(3) COM'N. 16d @ 16" O.C.	TYP. FACE NAIL
7	TOP PLT. TO STUD	(2) 16d COM'N.	END NAIL
8	STUD TO SOLE PLT.	(4) 8d COM'N. OR (2) 16d COM'N.	TOE NAIL END NAIL
9	DOUBLE STUDS	16d COM'N. @ 24" O.C.	FACE NAIL
10	DOUBLE TOP PLT'S.	16d COM'N. @ 16" O.C.	TYP. FACE NAIL
10.1	DOUBLE TOP PLT'S.	(8) 16d COM'N.	LAP SPLICE
11	BLK'G. BETN. JST'S. OR RAFTERS TO TOP PLT.	(3) 8d COM'N.	TOE NAIL
12	RIM JST. TO TOP PLT.	8d COM'N. @ 6" O.C.	TOE NAIL
13	TOP PLT'S, LAPS	(8) 16d COM'N.	FACE NAIL
14	CONTINUOUS HEADER, TWO PIECES	16d COM'N. @ 16" O.C.	ALONG EDGE
15	CEILING JST'S. TO PLT.	(3) 8d COM'N.	TOE NAIL
16	CONTINUOUS HEADER TO STUD	(4) 8d COM'N.	TOE NAIL
17	CEILING JST'S, LAPS OVER PARTITIONS	(3) 16d COM'N.	FACE NAIL
18	CEILING JST. TO PARALLEL RAFTERS	(3) 16d COM'N.	FACE NAIL
19	RAFTER TO PLT.	(3) 8d COM'N.	TOE NAIL
20	BUILT-UP CORNER STUDS	16d COM'N. @ 24" O.C.	24" O.C.
21	BUILT-UP GIRDER & BEAMS	20d COM'N. @ 32" O.C.	FACE NAIL AT TOP & BOTTOM STAG'D. ON OPPOSITE SIDES
22	COLLAR TIE TO RAFTER	(3) 10d COM'N.	FACE NAIL
23	ROOF RAFTER TO 2-BY RIDGE BEAM	(2) 16d COM'N.	TOE NAIL/FACE NAIL
24	LEDGER STRIP	(3) 16d COM'N.	FACE NAIL

ABREVIATIONS: COMMON: COM'N., BLOCKING: BLK'G., STAGGERED.: STAG'D., BETWEEN.: BTWN., JOIST: JST., PLATE: PLT.

EXISTING STRUCTURES:

1. ALL CONDITIONS SHOWN OR NOTED AS EXISTING ARE BASED ON INFORMATION CURRENTLY AVAILABLE AT THE TIME OF PREPARATION OF THESE DRAWINGS. NO WARRANTY IS IMPLIED AS TO THE ACCURACY OF SAME. CONTRACTOR IS TO FIELD VERIFY ALL CONDITIONS. SHOULD CONDITIONS BE DIFFERENT THAN INDICATED IN THESE DRAWINGS, THE CONTRACTOR SHALL INFORM THE ENGINEER OF ANY DISCREPANCIES PRIOR TO CONTINUING CONSTRUCTION.

SHEAR WALL SCHEDULE

TYPE	SHEATHING	SHT'G NAILING COMMON NAILS	NAILS THRU WALL BOTTOM (SILL) PL.	⅝"ø BOLTS THRU SILL PL. @ FNDN.	SIMPSON A35 OR LTP4 @ TOP PL.	FRAMING @ JOINTS ABUTTING PANELS	WALL SILL PLATE	SHEAR VALUE	REMARKS
1	1/2" DRYWALL	5d COOLER NAILS @ 7" O.C.	16d @ 16" O.C.	48" O.C.	48" O.C.	2x	2x	53 #/FT	E
2	7/8" STUCCO OR PLASTER	11GAx1.5" NAILS.	16d @ 16" O.C.	48" O.C.	48" O.C.	2x	2x	128 #/FT	A
3	1/2" STRUC. I PLYWD/OSB	8d @ 6" O.C. E.N. & 12" O.C. F.N.	16d @ 8" O.C.	48" O.C.	16" O.C.	2x	2x	280 #/FT	E
4	1/2" STRUC. I PLYWD/OSB	8d @ 4" O.C. E.N. & 12" O.C. F.N.	16d @ 6" O.C.	48" O.C.	12" O.C.	3x	3x	430 #/FT	B, C, H
5	1/2" STRUC. I PLYWD/OSB	10d @ 4" O.C. E.N. & 12" O.C. F.N.	16d @ 4" O.C.	32" O.C.	12" O.C.	3x	3x	510 #/FT	B, C, H
6	1/2" STRUC. I PLYWD/OSB	10d @ 3" O.C. E.N. & 12" O.C. F.N.	16d @ 3" OR SDS @ 12" O.C.	32" O.C.	9" O.C.	3x	3x	664 #/FT	B, C, D, H
7	1/2" STRUC. I PLYWD/OSB	10d @ 2" O.C. E.N. & 12" O.C. F.N.	SIMP. SCREWS SDS @ 8" O.C.	24" O.C.	6" O.C.	3x	3x	869 #/FT	B, D, E, F, H
8	1/2" STRUC. I PLYWD/OSB BOTH SIDES	10d @ 4" O.C. E.N. & 12" O.C. F.N.	SIMP. SCREWS SDS @ 6" O.C.	16" O.C.	BOTH SIDES 12" O.C.	3x	3x	1,020 #/FT	B, D, E, F, G, H
9	1/2" STRUC. I PLYWD/OSB BOTH SIDES	10d @ 3" O.C. E.N. & 12" O.C. F.N.	USE @ FNDN. LEVEL ONLY	12" O.C.	BOTH SIDES 9" O.C.	3x	3x	1,328 #/FT	B, F, G, H
10	1/2" STRUC. I PLYWD/OSB BOTH SIDES	10d @ 2" O.C. E.N. & 12" O.C. F.N.	USE @ FNDN. LEVEL ONLY	12" O.C.	BOTH SIDES 6" O.C.	3x	3x	1,739 #/FT	B, F, G, H

SHEAR WALL NOTES:

1. ANCHOR BOLTS SHALL BE ⅝"ø w/ 7" MIN CONC. EMBEDMENT & W/ 3"X3"X0.229" WASHER PLATES (ALSO DIAGONAL SLOTTED W/ STD WASHERS). NAILS THRU PLATES AND SHT'G NAILS SHALL BE COMMON NAILS (EXCEPT AS NOTED). SEE "WOOD NOTES" FOR LUMBER, PLYWD, OSB, & OTHER SPEC'S.
2. WALL SHT'G SHALL CONSIST OF 4'X8' PANELS WHEREVER POSSIBLE. THE MINIMUM PANEL WIDTH SHALL BE 24" WITH BLK'G MEMBERS @ EDGES. WALL STUDS SHALL HAVE A MAXIMUM SPACING OF 16" O.C.
3. WALL PLATES SHALL BE CONTINUOUS AND FREE OF CUTS AND NOTCHES. BORED HOLES SHALL BE LIMITED TO A MAXIMUM OF 1"ø AT CENTER OF PLATE.
4. CONTRACTOR SHALL CALIBRATE PNEUMATIC NAILING EQUIPMENT TO ENSURE THAT THE FACE PLY OF THE SHT'G IS NOT BROKEN BY THE NAIL HEAD PENETRATION. REPLACE ALL PANELS W/ MORE THAN 10% OF THE NAIL HEADS PENETRATING THE FACE PLY. PANELS MAY BE RE-NAILED ONLY WHEN APPROVED BY THE ENGINEER.
5. HOLD-DOWNS SHALL BE INSTALLED ON END POSTS AS NOTED ON PLANS. CONTRACTOR SHALL FOLLOW INSTALLATION RECOMMENDATIONS AS SPECIFIED BY MANUFACTURER. BOLTS ON WOOD POST SHALL HAVE A MAXIMUM OVERSIZED HOLE EQUAL TO THE BOLT DIAMETER PLUS 1/16" AND SHALL BE TIGHTENED AND VERIFIED BY INSPECTOR JUST PRIOR TO INSTALLATION OF SHEATHING.

REMARKS:

A. STUCCO OR CEMENT PLASTER SHALL HAVE EXPANDED METAL OR WOVEN WIRE.
B. SPECIAL INSPECTION REQUIRED WHEN NAILING IS 4" OR LESS (CBC 1707.3).
C. 3x FRAMING ALTERNATE: (2)2x FRAMING NAILED w/ 10d @ 4" O.C. (SDPWS 4.3.7.1).
D. SIMPSON SDS SCREWS w/ 5" LENGTH FOR 2x & 6" FOR 3x SILL PLATES
E. 3/8" SHALL BE PROVIDED FOR EDGE NAILING ON SHT'G & 2x MEMBERS @ JOINTS.
F. WALL BOTTOM PL'S, STUDS & BLK'G @ SHT'G JOINTS REQUIRE 3X FRAMING.
G. SHT'G E.N. SHALL BE STAGGERED WHEN SHEATHING OCCURS ON BOTH SIDES.
H. 1/2" SHALL BE PROVIDED FOR EDGE NAILING ON SHT'G & 3x MEMBERS @ JOINTS.

FOUNDATIONS:

1. THE SOIL PROPERTIES REFERENCED BELOW ARE BASED ON EXPANSIVE CLAY AND THE CORRESPONDING ALLOWABLE DESIGN VALUES CORRESPOND TO TABLE 1806.2 OF THE GOVERNING CODE:
   - SOIL BEARING PRESSURE ON NATURAL SOILS, 1500 PSF
   - ACTIVE PRESSURE DUE TO NATURAL SOILS, 60 PCF
   - PASSIVE PRESSURE OF NATURAL SOILS, 100 PCF
2. FOOTINGS SHALL BEAR A MINIMUM 24" BELOW ADJACENT GRADE OR COMPACTED SOIL OR AS NOTED ON THE PLANS. ALL BACKFILL SHALL BE COMPACTED TO A MINIMUM OF 90% OF MAXIMUM DENSITY IN ACCORDANCE WITH ASTM S-1557 OR PER APPROVED SOILS REPORT. EXCAVATIONS FOR THE FOOTINGS SHALL BE FREE OF WATER PRIOR TO PLACING OF CONCRETE.
3. NO PERSON SHALL DESCEND INTO TRENCHES OR EXCAVATIONS WITH A DEPTH GREATER THAN 5 FEET, UNLESS NECESSARY PERMITS HAVE BEEN OBTAINED FROM THE STATE OF CALIFORNIA DIVISION OF INDUSTRIAL SAFETY.
4. THE CONTRACTOR SHALL BE SOLELY RESPONSIBLE FOR ALL EXCAVATION PROCEDURES INCLUDING LAGGING, SHORING AND PROTECTION OF ANY ADJACENT PROPERTY, STRUCTURES, STREETS AND UTILITIES IN ACCORDANCE WITH ALL NATIONAL, STATE AND LOCAL SAFETY ORDINANCES.
5. CONTRACTOR SHALL REVIEW EXISTING UTILITY PLANS AND SHALL VERIFY THE LOCATION OF ALL UTILITY LINES IN THE AREA TO BE EXCAVATED PRIOR TO EXCAVATION FOR NEW FOUNDATIONS.

REINFORCING STEEL:

1. REINFORCING STEEL SHALL CONFORM TO ASTM 615, GRADE 60, U.N.O. STEEL BARS SHALL BE DEFORMED BARS THAT ARE FREE FROM GREASE, RUST, MILL SCALE OR ANY OTHER FOREIGN MATERIAL WHICH MAY AFFECT THE BARS ABILITY TO BOND TO THE CONCRETE. REINFORCING STEEL SHALL HAVE MINIMUM PROTECTIVE COVER AS FOLLOWS:
   - CONC. CAST AND PERMANENTLY EXPOSED TO EARTH . . . . . 3"
   - CONC. EXPOSED TO EARTH/WEATHER, # 6 THRU #11 BARS. . . . . 2"
   - CONC. NOT EXPOSED TO WEATHER NOR IN CONTACT W/ GROUND. . 1½"
   - CONC. FOR SLABS, WALLS AND JOISTS, #11 BARS AND SMALLER. . ¾"
   - CONC. FOR BEAMS & COLUMNS, INCLUDING TIES & STIRRUPS. . . . 1½"
   - MASONRY WALLS, PILASTER AND LINTELS REINFORCEMENT. . . . . 1½"
2. ALL DETAILING OF REINFORCING SHALL CONFORM TO THE REQUIREMENTS OF ACI 318-14. ALL REINFORCING BAR BENDS SHALL BE MADE COLD. REINFORCEMENT THAT IS PARTIALLY EMBEDDED IN CONCRETE SHALL NOT BE FIELD BENT, U.N.O.
3. CONTRACTOR SHALL USE CHAIRS OR OTHER SUPPORT DEVICES RECOMMENDED BY THE CRSI TO SUPPORT THE REINFORCING BARS OR WELDED WIRE MESH PRIOR TO PLACING CONCRETE. WELDED WIRE MESH SHALL BE CONTINUOUSLY SUPPORTED AT 36" O.C MAXIMUM.
4. LAP SPLICES FOR MASONRY AND CLASS-B (NOT STAGGERED, BARS SPACING GREATER THAN $2d_b$) LAP SPLICES FOR CONCRETE SHALL HAVE A MINIMUM LENGTH AS FOLLOWS:
   - #4 BARS & LESS . . . . . 24"
   - #5 & #6 BARS. . . . . $62d_b$
   - #7 BARS & LARGER. . . . . $78d_b$

   LAP SPLICES FOR CANTILEVER BEAMS W/ TOP REINFORCEMENT SHALL BE INCREASED BY 30%
5. REINFORCING STEEL, ANCHOR BOLTS, DOWELS, AND WALL TIES SHALL BE SECURED IN POSITION AND INSPECTED BY THE LOCAL BUILDING INSPECTOR PRIOR TO POURING OF ANY CONCRETE OR GROUTING MASONRY.
6. REINFORCEMENT TO BE WELDED TO STEEL MEMBERS SHALL CONFORM TO ASTM 706 AND SHALL REQUIRE CONTINUOS INSPECTION. USE LOW HYDROGEN ELECTRODES, GRADE E-90, FOR WELDING OF REINFORCING BARS.
7. PROVIDE DOWELS OF SAME SIZE AND NUMBER FROM ADJACENT POUR, BOTH VERTICALLY AND HORIZONTALLY TO MATCH TYP. REINFORCING SHOWN. LAPS TO BE IN ACCORDANCE WITH THE DRAWINGS AND DETAILS. ALL DOWELS TO BE CLEANED AFTER POUR AND CARE SHALL BE TAKEN SO AS NOT TO BEND DOWELS EXTENDING FROM CONCRETE PREVIOUSLY POURED.

STRUCTURAL STEEL:

1. STRUCTURAL STEEL SHAPES SHALL CONFORM TO THE FOLLOWING MATERIAL SPECIFICATIONS PER ASTM DESIGNATIONS AND AS AMENDED TO DATE, U.N.O.:
   - WIDE FLANGES ASTM A-572, GRADE 50.
   - ANGLES AND OTHER SHAPES: ASTM A-36.
   - PIPES: ASTM A-53 TYPE E OR S, GRADE B.
   - TUBES: ASTM A-500 GRADE B.
   - SHEAR PLATES AND COLUMN BASE PLATES: ASTM A-36.
   - CONTINUITY PLATES AND DOUBLER PLATES: ASTM A-572, GRADE 50.
   - MISCELLANEOUS PLATES: ASTM A-36.
2. SHOP DRAWINGS FOR STEELWORK MUST BE APPROVED BY THE ENGINEER PRIOR TO FABRICATION. FABRICATOR SHALL FIELD VERIFY ALL DIMENSIONS PRIOR TO COMMENCEMENT OF FABRICATION. FABRICATION AND ERECTION SHALL CONFORM TO AISC AND AWS SPECIFICATIONS.
3. BOLTS SHALL BE A307 WITH ASTM A563 HEAVY HEX NUTS AND HARDENED WASHERS GRADE A, U.N.O. HIGH STRENGTH BOLTS SHALL BE A325 AND SHALL BE INSTALLED WITH SPECIAL INSPECTION BY A DEPUTY INSPECTOR, U.N.O. HOLES FOR BOLTS IN STRUCTURAL STEEL SHALL BE DRILLED OR PUNCHED. BURNING OF HOLES SHALL NOT BE PERMITTED. HOLES IN STEEL MEMBERS SHALL NOT BE GREATER THAN 1/16" OF THE NOMINAL BOLT DIAMETER, U.N.O.
4. WELDING PROCEDURE SPECIFICATIONS SHALL CONFORM TO PRE-QUALIFIED AWS PROCEDURES OR AS APPROVED BY THE ENGINEER. ELECTRODES SHALL BE E70XX, U.N.O.
5. SHOP WELDING SHALL BE PERFORMED BY A CERTIFIED FABRICATOR LICENSED BY THE LOCAL BUILDING DEPARTMENT.
6. FIELD WELDING SHALL BE PERFORMED BY CERTIFIED WELDERS LICENSED BY THE LOCAL BUILDING DEPARTMENT. CONTINUOUS INSPECTION BY A REGISTERED DEPUTY BUILDING INSP

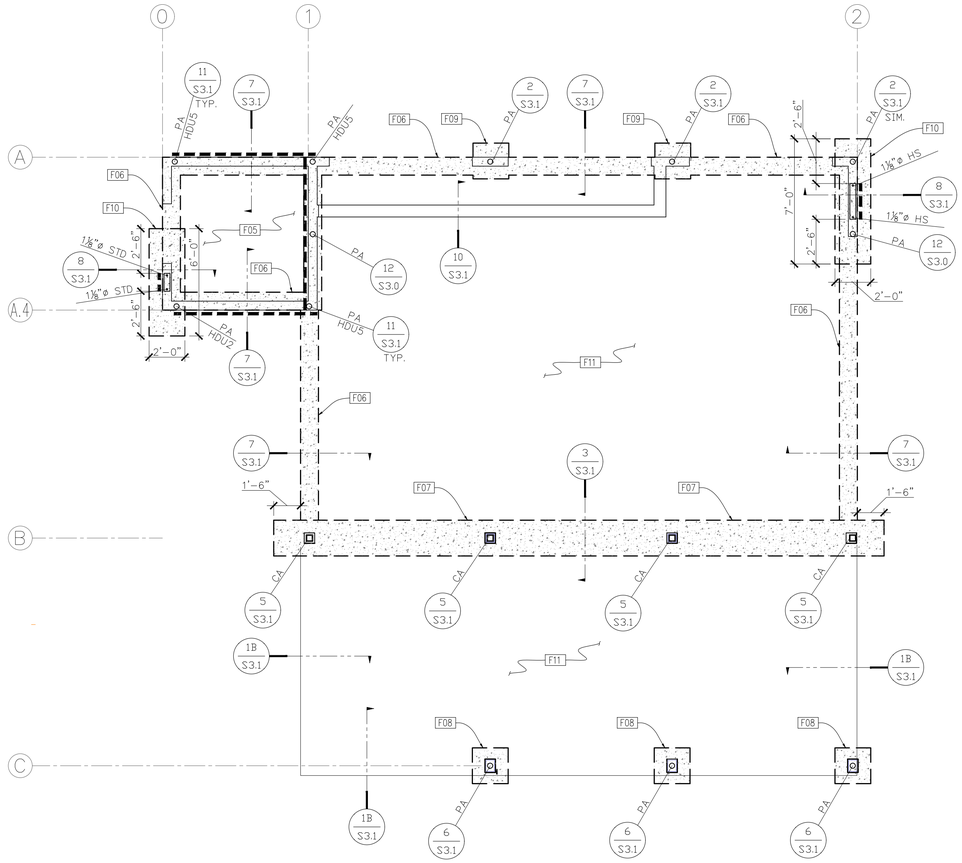

FOUNDATION PLAN

1/4"=1'-0"

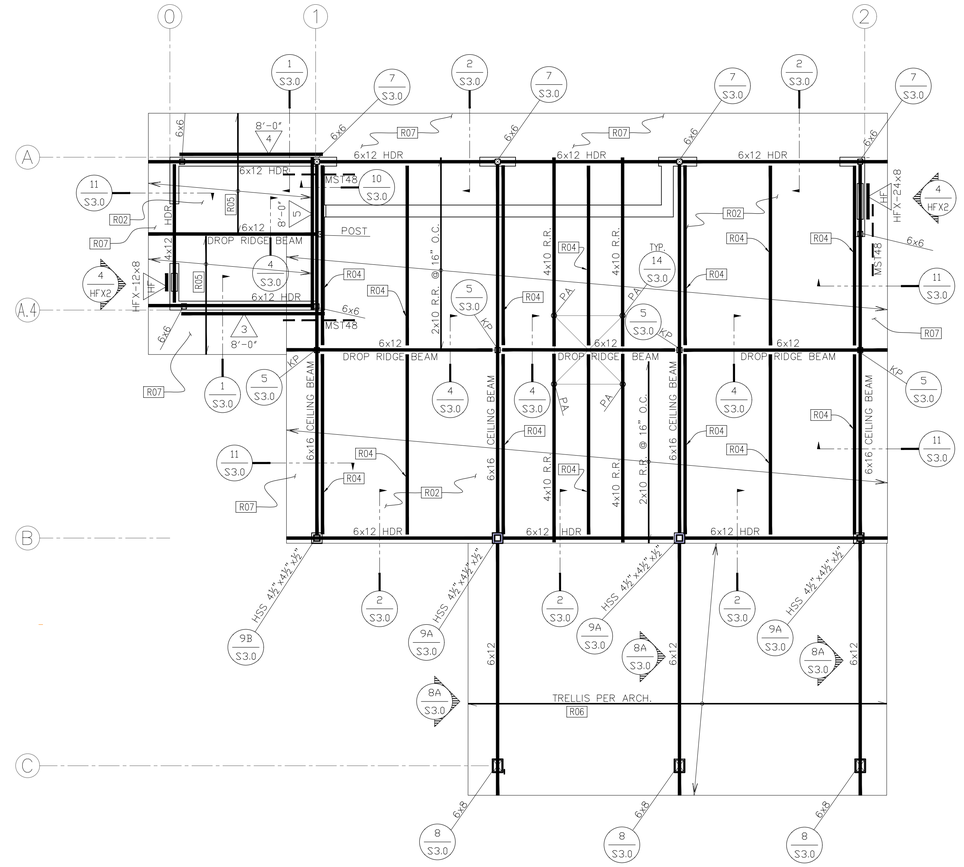

ROOF FRAMING PLAN

1/4"=1'-0"

PLAN NOTES:

P01 SEE SHEET S0.1 FOR GENERAL NOTES & MATERIAL SPECIFICATIONS.

P02 SEE SHEET S3.0 TO S3.1 FOR TYPICAL DETAILS.

P03 SEE ARCH. DWG'S. FOR DIMENSIONS, DEPRESSIONS, CURBS AND OTHER INFORMATION NOT SHOWN.

FOUNDATION NOTES

F01 ALL FOOTING EXCAVATIONS SHALL BE WET PRIOR TO POUR.

F02 ALL HOLDOWN ANCHORS SHALL BE TIED IN PLACE PRIOR TO CALLING FOR FOUNDATION INSPECTION. HOLDOWNS SHALL BE RE-TIGHTENED JUST PRIOR TO COVERING THE WALL FRAMING.

F03 BOTTOM OF FOOTINGS SHALL BE A 12" INTO BEARING MATERIAL w/ A MINIMUM OF 24" BELOW THE LOWEST ADJACENT EXTERIOR GRADE AND/OR 18" BELOW THE BOTTOM OF INTERIOR SLABS, U.N.O.

F04 ALL SILL PLATES SHALL BE ANCHORED @ A MAX. SPACING OF 4'-0" W/ ⅝"ø x10" LONG A.B. EMBEDDED 7" INTO FOOTING (12" LONG @ 3x PL.), SEE SHEAR WALL SCHEDULE FOR ADDITIONAL REQUIREMENTS. A MINIMUM TWO BOLTS PER PIECE OF SILL PLATE AND ONE LOCATED WITHIN 12" AND NOT LESS THAN 7 BOLT DIAMETER OF EACH END OF EACH SILL PLATE. 3"x3"x.229" PLATE WASHER SHALL BE USED ON EACH ANCHOR BOLT.

F05 SLAB ON GRADE: 4" THK. CONC. W/ #4 BARS @ 16" O.C. E.W. SEE DETAIL 1A/S3.1

F06 CONTINUOUS FOOTING: 12" WIDE x 24" DEEP W/ (2) #4 BARS @ T&B. MIN. DEPTH PER NOTE F03.

F07 GRADE BEAM: 24" WIDE x 24" DEEP W/ (3) #7 BARS @ T&B. & #4 TIES @ 10" O.C. MIN DEPTH PER NOTE F03.

F08 CONC. PAD: 24" SQ. MIN. DEPTH PER NOTE F03. SEE DETAIL 6/S3.1 FOR REINFORCEMENT INFO.

F09 CONC. PAD: 24" SQ. x 12" THK. W/ (3) #4 BOTTOM BARS E.W. MIN. DEPTH PER NOTE F03.

F10 GRADE BEAM: 24" WIDE x 24" DEEP W/ (2) #6 BARS @ T&B. & #4 TIES @ 10" O.C. MIN DEPTH PER NOTE F03.

F11 EXTERIOR SLAB ON GRADE: 4" THK. CONC. W/ #4 BARS @ 16" O.C. E.W. SEE DETAIL 1B/S3.1

FRAMING NOTES:

R01 WALL FRAMING SHALL USE 2x4 STUDS @ 16" O.C. U.N.O. SEE ARCH. DRAWINGS FOR ADDITIONAL SIZE REQUIREMENTS.

R02 ROOF SHEATHING SHALL BE ½" CDX-EXP 1 OSB, INDEX 32/16. NAILING SCHEDULE SHALL CONSIST OF 8d COMMON NAILS @ 6" O.C. ALONG PANEL EDGES AND 12" O.C. @ INTERMEDIATE SUPPORTS. SEE "WOOD & CARPENTRY" NOTES ON SHEET S0.1 FOR ADDITIONAL INFO.

R03 JOIST & BEAM SIMPSON HANGERS FOR FLUSH FRAMING SHALL BE AS FOLLOWS, U.N.O. ON PLAN NEXT TO REFERENCED DETAIL. SAWN LUMBER JOIST/ RAFTERS: LUSXX (FACEMOUNT), JBXX (TOP FLANGE), OR HUCXX (CONCEALED FLANGE). SAWN LUMBER BEAMS: SIMPSON HUXX (FACEMOUNT), HUXXTF (TOP FLANGE), OR HUCXX (CONCEALED FLANGE). TJI JOIST: IUTXX (FACEMOUNT), ITTXX (TOP FLANGE). PSL BEAMS: HGUSXX (FACEMOUNT), HBXX OR GLTVXX (TOP FLANGE).

R04 6x8 SLOPPED DECORATIVE BEAM PER ARCH. SEE DETAIL 2/S3.0 & 4/S3.0 FOR CONNECTIONS TO BEAMS.

R05 2x10 ROOF RAFTERS @ 16" O.C.

R06 TRELLIS PER ARCH. SEE DETAIL 8A/S3.0 FOR CONNECTIONS TO BEAMS.

R07 2x6 EXPOSED T&G DECKING W/ (2) 10d NAILS @ EACH OUTRIGGER OR EXPOSED ROOF RAFTERS.

R08 ROOFING MATERIAL SHALL NOT EXCEED 15 POUNDS PER SQUARE FOOT.

PLAN LEGEND:

- #'-#" / # — SHEAR WALL TYPE AND MIN. LENGTH. SEE GENERAL NOTES FOR SHEAR WALL NOTES AND SCHEDULE. SEE ARCH. DWG'S. FOR ACTUAL DIMENSIONS.
- MST — SIMPSON "MST" HORZ. STRAP (DRAG LINE).
- R.R. — DIRECTION OF FRAMING RAFTER/JOIST.
- SPAN DIRECTION OF FRAMING.
- HDR/BM — FLUSHED / DROPPED / BEAM HEADER
- POST, KP, PA, COL, CA — POST= 4x4, U.N.O. PA= POST ABOVE, SIZE NOTED ON PLAN ABOVE. HUXX= SIMPSON HOLDOWN. KP = KING POST
- STEEL COLUMN/COLUMN ABOVE PER PLAN.
- (N) — CONTINUOUS OR PAD FOOTING.

BUILDING AND SAFETY DIVISION
Department of Public Works
APPROVED
UNDER LOS ANGELES COUNTY CODE
TITLES 26, 30 AND 31
tvtp
PUBLIC WORKS
09/27/2024 2:06:40 PM

This set of plans and specifications must be kept at the job site at all times, and it is unlawful to make any changes, modifications or additions to these plans or specifications without the prior written permission of the Building Official. The stamping of this set of plans and specifications SHALL NOT, under any circumstances, be deemed to permit or to be an approval of any work or activity that violates any provisions of any County Ordinance or State Law

REVISION

REGISTERED PROFESSIONAL ENGINEER
LIONEL J. GARCIA
No. 4653
STRUCTURAL
STATE OF CALIFORNIA

G&G STRUCTURES, INC.
CIVIL & STRUCTURAL ENGINEERING
24702 NARBONNE AVE.
LOMITA, CA 90717
TEL (310) 294-8111 FAX (310) 294-8112

sheet description
FOUNDATION + ROOF FRAMING PLAN

All ideas, designs, and plans indicated or represented by this drawing are the property of G&G STRUCTURES, INC., and were created and developed for use on and in connection with this specific project. None of such ideas, designs or plans shall be used by or disclosed to any person, firm or corporation for any purpose without the written permission of G&G STRUCTURES, INC.

CABANA
#2 PORTUGUESE BEND ROAD
ROLLING HILLS, CA 90274

date:	11/19/2023
scale:	1/4": 1'-0"
drawn by:	R.R.
job no.:	23-197
sheet:	S1.0

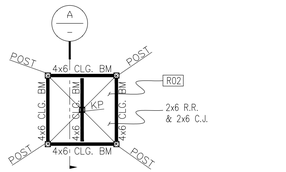

COPULA ROOF FRAMING PLAN

1/4"=1'-0"

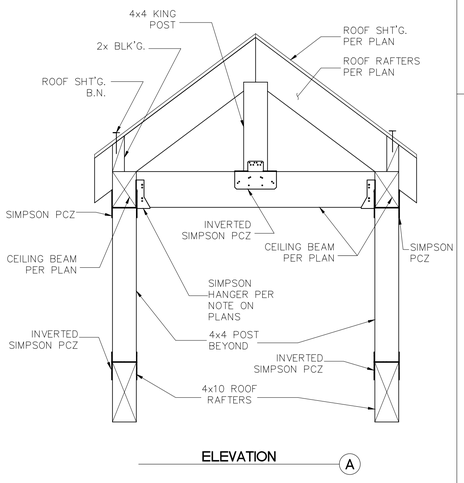

14 COPULA FRAMING

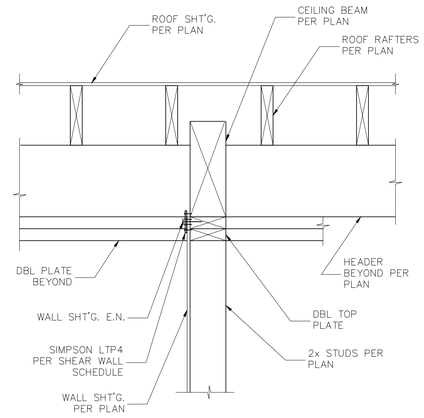

10 INTERIOR SHEAR WALL

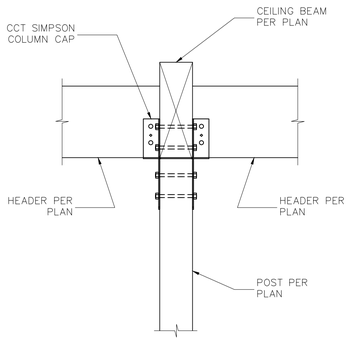

7 BEAMS/ POST CONNECTION

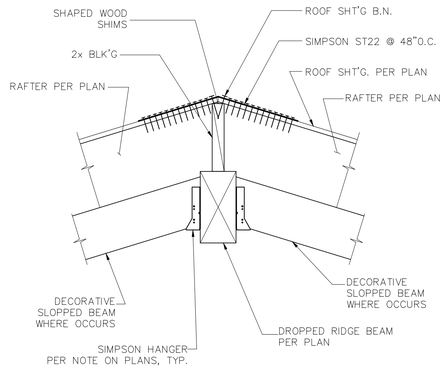

4 DROPPED RIDGE BEAM

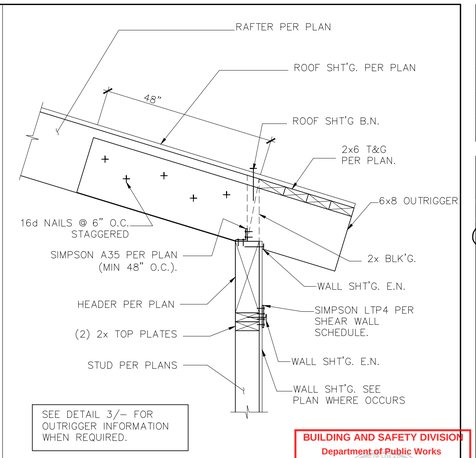

1 RAFTER TO WALL (PERP.)

BUILDING AND SAFETY DIVISION
Department of Public Works
APPROVED
UNDER LOS ANGELES COUNTY CODE
TITLES 26, 30 AND 31
BY
PUBLIC WORKS
03/27/2024 2:06:40 PM
This set of plans and specifications shall be kept at the job site at all times and it is unlawful to make any changes, modifications or deviations to these plans or specifications without the prior written permission of the Building Official. The stamping of this set of plans and specifications SHALL NOT be construed to be a permit or to be an approval of any work or activity that violates any provisions of the Los Angeles County Building Code or State Law



11 EAVE DETAIL

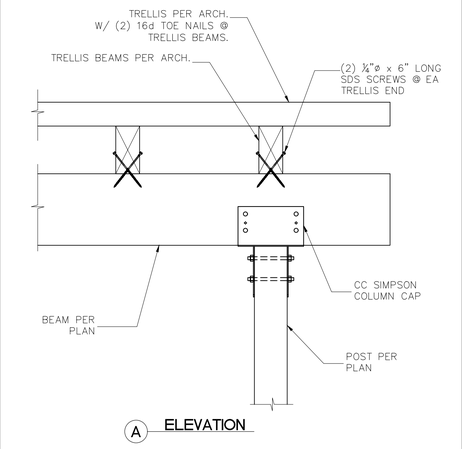

8 TRELLIS BEAMS/ POST CONNECTION

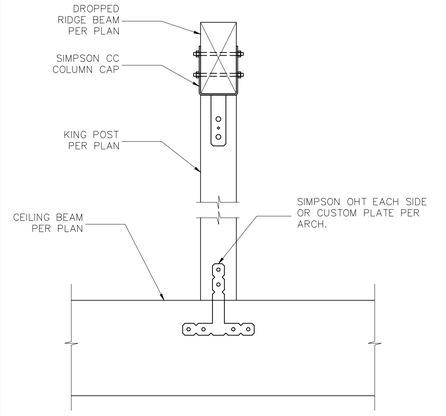

5 KING POST CONNECTION

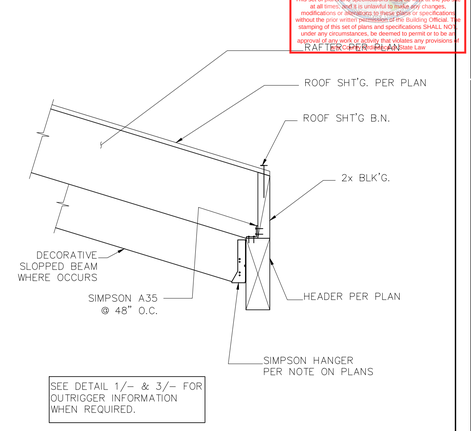

2 RAFTER TO HEADER (PERP.)

15 NOT USED

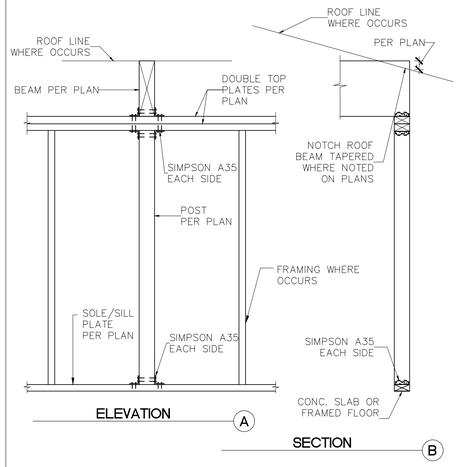

12 BEAM SET ON WALL PLATE W/ POST

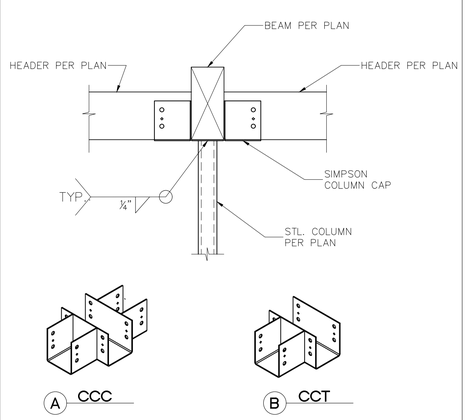

9 WOOD BEAMS/ STL. COLUMN CONNECTION

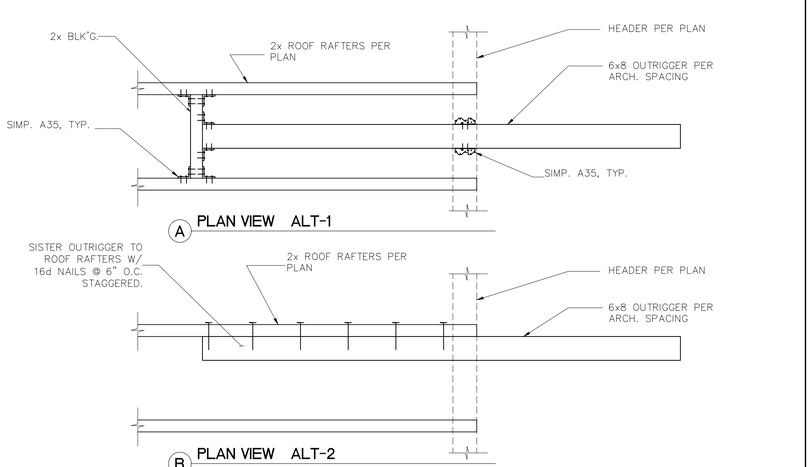

3 OUTRIGGER

REVISION

REGISTERED PROFESSIONAL ENGINEER
LIONEL J. GARCIA
No. 4653
STRUCTURAL
STATE OF CALIFORNIA

G&G STRUCTURES, INC.
CIVIL & STRUCTURAL ENGINEERING
24702 NARBONNE AVE.
LOMITA, CA 90717
TEL (310) 294-8111 FAX (310) 294-8112

sheet description
DETAILS

All ideas, designs, and plans indicated or represented by this drawing are the property of G&G STRUCTURES, INC., and were created and developed for use on and in connection with this specific project. None of such ideas, designs or plans may be used by any person, firm or corporation for any purpose without the written permission of G&G STRUCTURES, INC.

CABANA
#2 PORTUGUESE BEND ROAD
ROLLING HILLS, CA 90274

date:	11/19/2023
scale:	N.T.S
drawn by:	R.R.
job no.:	23-197
sheet:	S3.0

13 NOT USED

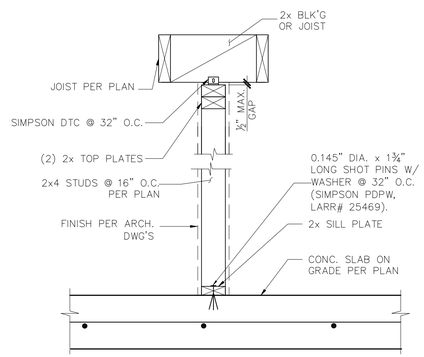

10 NON-BEARING WALL - SLAB ON GRADE

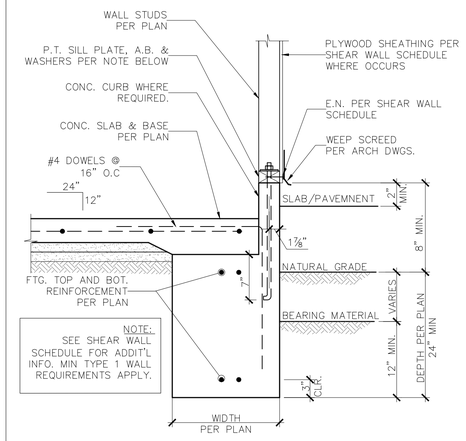

7 EXTERIOR FOOTING

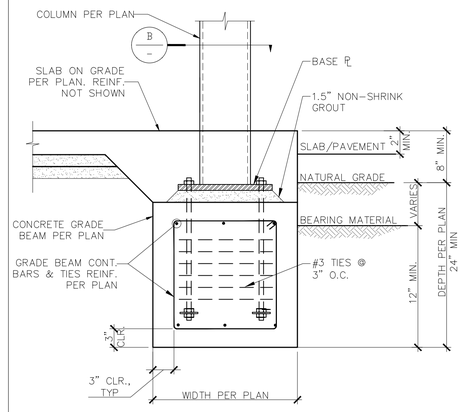

SECTION A

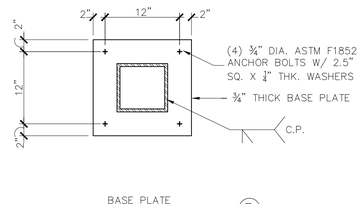

BUILDING AND SAFETY DIVISION
Department of Public Works
APPROVED
UNDER LOS ANGELES COUNTY CODE
TITLES 26, 30 AND 31
PUBLIC WORKS
03/27/2024 2:06:40 PM
This set of drawings, specifications shall be kept at the job site at all times and it is unlawful to make any changes, modifications or alterations on these plans or specifications, without the approval of the Building and Safety Official. The stamping of this set of plans and specifications SHALL NOT, be construed as being a permit or to be an approval of any provisions of any building code or law.

5 FOOTING FOR CANTILEVER COLUMN

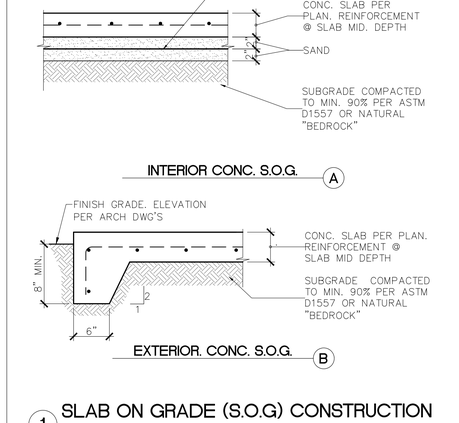

INTERIOR CONC. S.O.G. (A)

EXTERIOR. CONC. S.O.G. (B)

1 SLAB ON GRADE (S.O.G) CONSTRUCTION

14 NOT USED

HOLDOWN	ANCHOR	EMBED
HDU2	SSTB20	13"
HDU4	SSTB24	17"
HDU5	SSTB24	21"
HDU8	SSTB28	25"
HDU11	SB1x30	24"

ALL HOLDOWNS USE SIMPSON SCREWS SDS ¼" x2½" SSTB & SB1X30 LARR 25827 ICC NO. ESR-2611

NOTE: MIN 5" EDGE DISTANCE FROM END AND CORNER WALLS. EXTEND REBAR A MIN OF 2x EMBED ON EACH SIDE OF ROD, EXCEPT AT END WALL AND CORNER CONDITIONS.

11 HOLDOWN @ FOOTING / S.O.G.

8 GRADE BEAM UNDER CONT. FOOTING @ HARDY FRAME

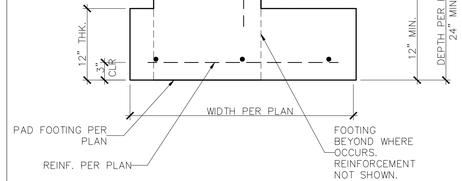

2 POST AT WIDEN FOOTING

15 NOT USED

12 NOT USED

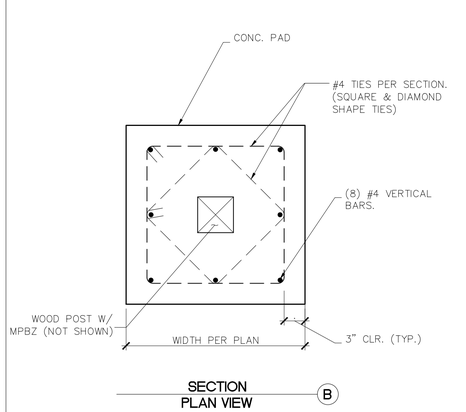

SECTION
PLAN VIEW (B)

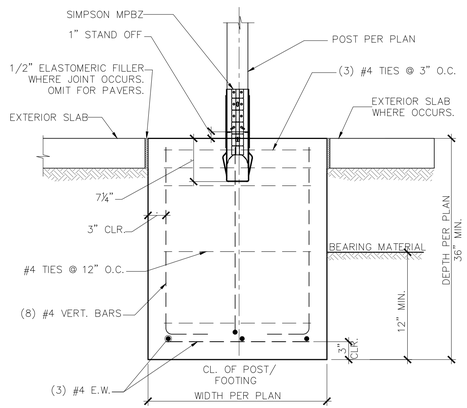

A SECTION
ELEVATION

6 POST AT ISOLATED SQUARE PAD FOOTING

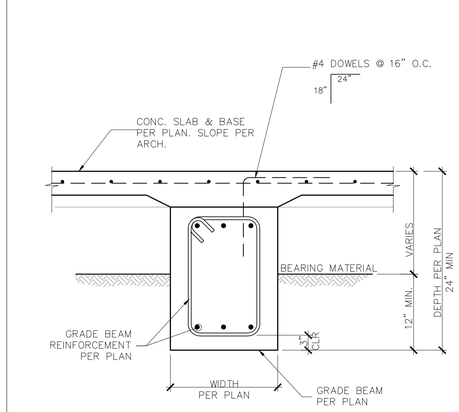

3 GRADE BEAM/ SLAB ON GRADE

REVISION

REGISTERED PROFESSIONAL ENGINEER
LIONEL J. GARCIA
No. 4653
STRUCTURAL
STATE OF CALIFORNIA

G&G STRUCTURES, INC.
CIVIL & STRUCTURAL ENGINEERING
24702 NARBONNE AVE.
LOMITA, CA 90717
TEL (310) 294-8111 FAX (310) 294-8112

sheet description
DETAILS

All ideas, designs, and plans indicated or represented by this drawing are the property of G&G STRUCTURES, INC., and were created and developed for use on and in connection with this specific project. None of such ideas, designs or plans shall be used by or disclosed to any person, firm or corporation for any purpose without the written permission of G&G STRUCTURES, INC.

CABANA
#2 PORTUGUESE BEND ROAD
ROLLING HILLS, CA 90274

date:	11/19/2023
scale:	N.T.S
drawn by:	R.R.
job no.:	23-197
sheet:	S3.1

BACK TO BACK REINFORCED ANCHORAGE (BB-RA)

Model	Panel Width (in)	Anchorage[1]	Rod Dia (in)	Rod Grade	BB-RA le[4] (in)	C_{a1}[5] (in)	C_{a2}[5] (in)	Stirrups[6] (in)	Shear[7] Ties
HFX-9x	9	1-1/8-STD-BB-RA	1-1/8	STD	15	19-3/4	11	8 - # 4	# 3 (min) @ 3-3/4" OC
HFX-12x	12	1-1/8-STD-BB-RA		STD				13 - # 4	
HFX-15x	15	1-1/8-HS-BB-RA		HS					# 3 (min) @ 4" OC
HFX-18x	18	1-1/8-STD-BB-RA		STD				14 - # 4	
		1-1/8-HS-BB-RA		HS					
HFX-21x	21	1-1/8-STD-BB-RA		STD	23	20-5/8		15 - # 4	# 4 (min) @ 4" OC
		1-1/8-HS-BB-RA		HS				16 - # 4	
HFX-24x	24	1-1/8-STD-BB-RA		STD				18 - # 4	
		1-1/8-HS-BB-RA		HS					

BACK TO BACK REINFORCED ANCHORAGE NOMENCLATURE
1-1/8 - STD - BB - RA
- REINFORCED ANCHORAGE
- "BACK TO BACK" INSTALLATION
- ROD GRADE
- ROD DIAMETER

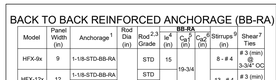

3

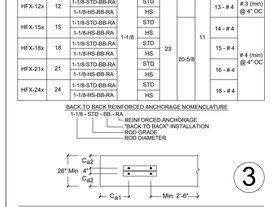

BB-RA SHEAR TIES & STIRRUPS 3A

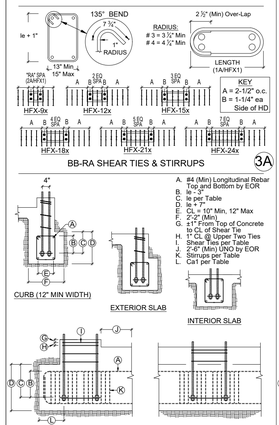

BB-RA SECTIONS & ELEVATIONS 3B

REINFORCED ANCHORAGE (RA)

Model	Panel Width (in)	Anchorage[1]	Rod Dia (in)	Rod Grade	RA le[4] (in)	C_{a1}[5] (in)	C_{a2}[5] (in)	Stirrups[6] (in)	Shear[7,8] Ties
HFX-9x	9	1-1/8-STD-RA	1-1/8	STD	15	19-3/4	11	8 - # 4	1 - # 3
HFX-12x	12	1-1/8-STD-RA		STD				9 - # 4	
HFX-15x	15	1-1/8-HS-RA		HS					
		1-1/8-STD-RA		STD				10 - # 4	# 3 (min) @ 4" OC
HFX-18x	18	1-1/8-HS-RA		HS					
		1-1/8-STD-RA		STD				11 - # 4	
HFX-21x	21	1-1/8-HS-RA		HS		20-5/8			
HFX-24x	24	1-1/8-STD-RA		STD				12 - # 4	# 4 (min) @ 4" OC
		1-1/8-HS-RA		HS					

REINFORCED ANCHORAGE NOMENCLATURE
1-1/8 - STD - RA
- REINFORCED ANCHORAGE
- ROD GRADE
- ROD DIAMETER

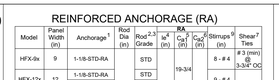

2

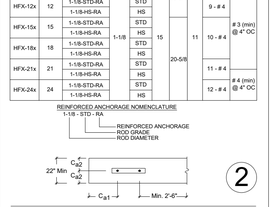

RA SHEAR TIES & STIRRUPS 2A

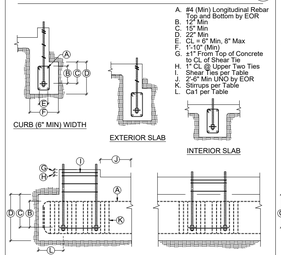

RA SECTIONS & ELEVATIONS 2B

UNREINFORCED ANCHORAGE (UA)

Model	Panel Height	Anchorage[1]	Rod Dia (in)	Rod Grade[2,3]	UA le[4] (in)	C_{a1}[5] (in)	C_{a2}[5] (in)	Shear[7,8] Ties
HFX-9x	79.5" - 8'	1-1/8-STD-13-19	1-1/8	STD	13	19		1 - # 3
HFX-12x	78" - 10'	1-1/8-HS-20-30		HS	20	30		
HFX-15x, 18x	78" - 13'	1-1/8-STD-14-20		STD	14	20		
HFX-15x, 18x Balloon	14' - 20'	1-1/8-HS-20-30		HS	20	30		
HFX-21x, 24x	78" - 13'	1-1/8-STD-14-20		STD	14	20		2 - # 3
		1-1/8-HS-23-34		23	34			
HFX-21x, 24x Balloon	14' - 20'	1-1/8-HS-20-30		HS	20	30		

UNREINFORCED ANCHORAGE NOMENCLATURE
1-1/8 - STD - 14 - 20
- END & EDGE DISTANCE (C_{a1} & C_{a2})
- EMBEDMENT DEPTH (l_e)
- ROD GRADE
- ROD DIAMETER

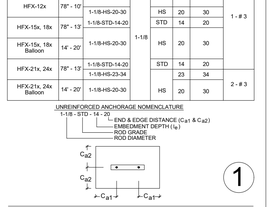

SHEAR TIES	NOT REQUIRED WHEN	
Model	Length	End Distance	Edge Distance 2
HFX-9x	7-1/2"	2-3/8"	2-3/8"
HFX-12x	10-1/2"	6-1/4"	3-1/2"
HFX-15x	12"	7-3/8"	4-1/4"
HFX-18x	15"	8-3/8"	5"
HFX-21x	18"	9-3/8"	5-1/2"
HFX-24x	21"	10-3/8"	6"

UA SHEAR TIES 1A

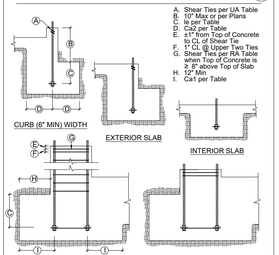

UA SECTIONS & ELEVATIONS 1B

TABLE NOTES

1. DESIGNS ARE TO RESIST LOADING PER ACI 318-14, SECTION 17.2.3.4.3.
2. STD INDICATES ANCHORS COMPLYING WITH ASTM F1554 GRADE 36 WITH A HARDY FRAME BOLT BRACE (HFXBB) INSTALLED WITH DOUBLE NUTS ON THE EMBED END.
3. HS INDICATES ANCHORS COMPLYING WITH ASTM A193,GRADE B7 WITH A 1/2"X3"X3"(MIN) HFPW PLATE WASHER INSTALLED WITH DOUBLE NUTS ON THE EMBED END (HFXBB NOT REQUIRED).
4. LE = LENGTH OF EMBEDMENT FROM THE TOP OF FOOTING OR GRADE BEAM TO THE TOP OF THE HFXBB BOLT BRACE (TOP OF THE EMBEDDED HFPW PLATE WASHER @ HS ANCHORS)
5. CA1 = DISTANCE FROM HD CENTERLINE TO BOTH THE FRONT AND THE BACK FACE OF THE FOOTING OR GRADE BEAM.
6. CA2 = DISTANCE FROM HD CENTERLINE TO BOTH THE FRONT AND THE BACK FACE OF THE FOOTING OR GRADE BEAM.
7. SHEAR TIES ARE GRADE 60 (MIN) REBAR AND REQUIRED FOR NEAR EDGE DISTANCE CONDITIONS PER ACI-318-14, f'_C = 2,500 PSI. CURBS AND STEM WALLS MUST BE 6 INCH (MIN) WIDTH FOR UA AND RA, 12 INCH (MIN) WIDTH FOR BB-RA.
8. FOR UA APPLICATIONS, ADDITIONAL TIES MAY BE REQUIRED AT STEM WALLS. SHEAR TIES ARE NOT REQUIRED FOR INSTALLATION AWAY FROM EDGE (SEE DETAIL 1A). INSTALLATION ON WOOD FRAMING, OR FOR IRC BRACED WALL PANEL APPLICATIONS.
9. STIRRUPS ARE GRADE 60 (MIN) REBAR. SEE TABLE FOR SIZE AND SPACING. SEE "STIRRUP LAYOUT" DIAGRAMS AND "KEY" FOR LAYOUT PATTERNS.
10. CONCRETE EDGE DISTANCES MUST COMPLY WITH ACI 318-14, SECTION 17.7.1

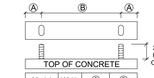

TOP OF CONCRETE

Model	Width	A	B
HFX-9x	9"	1-3/4"	5-1/2"
HFX-12x	12"		8-1/2"
HFX-15x	15"	2-5/8"	9-3/4"
HFX-18x	18"		12-3/4"
HFX-21x	21"		15-3/4"
HFX-24x	24"		18-3/4"

HFX ANCHOR CENTERLINES A

IMPORTANT!

1. ANCHORAGE IS DESIGNED FOR TENSION AND SHEAR TRANSFER ONLY, FOUNDATION DESIGN PER EOR.
2. REINFORCEMENT SHOWN IS THE MINIMUM REQUIREMENT AND IS NOT INTENDED TO REPLACE REINFORCEMENT DESIGNED BY THE EOR.
3. FOR RA AND BB-RA INSTALLATIONS, THE HFXBB BOLT BRACE MAY BE PLACED ON TOP OF THE STIRRUPS WITH DOUBLE-NUTS INSTALLED AT EMBED END OF STANDARD GRADE ANCHOR RODS. (NOTE: ½" x 3" x 5" MIN. HFPW PLATE WASHERS ARE REQUIRED TO BE DOUBLE-NUTTED AT EMBED END OF HIGH STRENGTH ANCHOR RODS.)
4. HIGH STRENGTH ALL-THREAD RODS PROVIDED BY HARDY FRAMES ARE STAMPED ON BOTH ENDS. (HF B7)

IMPORTANT NOTES B

REVISIONS	DATE

ANCHORAGE DETAILS - HFX PANELS

THIS DETAIL SHEET IS NOT PROPRIETARY AND IS NOT REQUIRED FOR PLAN SUBMITTAL WITH HARDY FRAME® PRODUCTS

HARDY FRAME® SHEARWALL SYSTEM
1739 PALMA DRIVE, SUITE 200, VENTURA, CA 93003
TELEPHONE: 805-754-0600 / www.hardyframe.com

MiTek®

DATE: 1-1-2018

HFX1

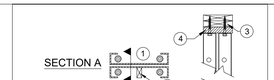

BACK TO BACK INSTALLATION 3

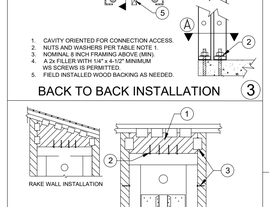

FILLER GREATER THAN 1-1/2 IN. 6

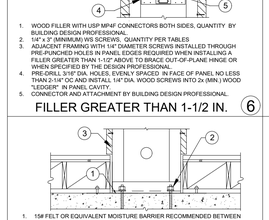

RAISED FLOOR HEAD-OUT 8

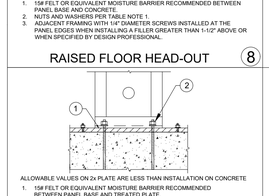

INSTALLATION ON 2x PLATE 11

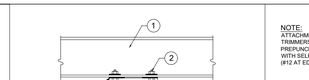

STEEL BEAM ABOVE THRU-BOLT 2

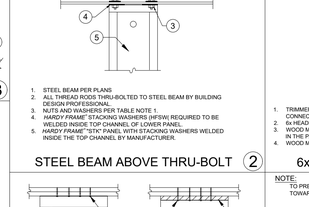

TOP PLATE CONNECTIONS 5

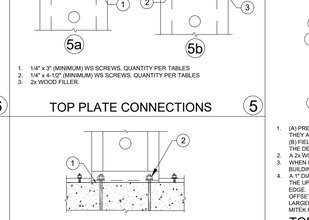

INSTALLATION ON CONCRETE 7

INSTALLATION ON NUTS & WASHERS 10

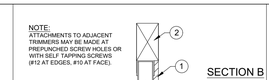

6x HEADER ABOVE-SECTIONS 1

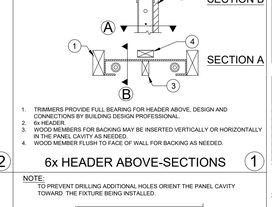

TOP CONNECTION TO HEADER 4

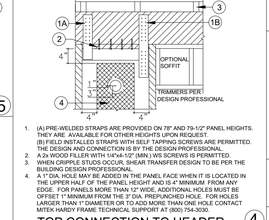

INSTALLATION ON CURB 9

HFX PANELS 78 IN. THROUGH NOMINAL 13 FEET

Model Number	Net Height (in)	Depth (in)	Hold Down Diameter[1] (in)	Top Screw Qty[2] (ea)	Screw Qty Available at Edges (ea)[2]
HFX-12,15,18,21 & 24x78	78	3-3/4	1-1/2	1-1/8	9" Width = 5	4
HFX-9x79.5	79-1/2				12" Width = 6	
HFX-12,15,18,21 & 24x9	92-1/4				15" Width = 8	
HFX-9x8	93-3/4				18" Width = 10	5
HFX-12,15,18,21 & 24x9	104-1/4				21" Width = 12	
HFX-12,15,18,21 & 24x10	116-1/4				24" Width = 14	6
HFX-15,18,21 & 24x11	128-1/4					
HFX-15,18,21 & 24x12	140-1/4					
HFX-15,18,21 & 24x13	152-1/4					

BALLOON PANELS 14 FEET THROUGH 20 FEET

Model Number	Net Height (in)	Depth (in)	Hold Down Diameter[1] (in)	Top Screw Qty[2] (ea)	Screw Qty Available at Edges (ea)
HFX-15,18,21 & 24x14	164-1/4	3-1/2	1-1/8	15" Width = 8	6
HFX-15,18,21 & 24x15	176-1/4				
HFX-15,18,21 & 24x16	188-1/4			18" Width = 10	7
HFX-15,18,21 & 24x17	200-1/4			21" Width = 12	
HFX-15,18,21 & 24x18	212-1/4				
HFX-15,18,21 & 24x19	224-1/4			24" Width = 14	8
HFX-15,18,21 & 24x20	236-1/4				

1. HOLD DOWN ANCHOR BOLTS CONNECT TO THE PANEL BASE WITH HARDENED ROUND WASHERS BELOW GRADE 8 NUTS. ALTERNATE WASHERS ARE (2 EA) ROUND-FLAT OR (2 EA) SAE WASHERS ON EACH BOLT. ALTERNATE NUTS ARE 2H HEAVY HEX.
2. 1/4" DIAMETER MITEK™PRO SERIES™ WS SCREWS. LENGTH IS 3" (MINIMUM) WHEN ATTACHED DIRECTLY TO THE COLLECTOR AND 4-1/2" (MINIMUM) WHEN INSTALLING A 2x FILLER ABOVE THE PANEL.
3. ADJACENT FRAMING WITH 1/4" DIAMETER SCREWS IS REQUIRED AT THE PANEL EDGES WHEN INSTALLING A FILLER ABOVE THE TOP CHANNEL THAT IS GREATER THAN 1-1/2" OR WHEN SPECIFIED BY THE DESIGN PROFESSIONAL.

A

INSTALLATION INSTRUCTIONS

1. WHEN INSTALLING ON CONCRETE CONNECT WITH (1 EA) HARDENED ROUND WASHER BELOW (1 EA) GRADE 8 NUT, SECURE WITH A DEEP SOCKET (RECOMMENDED) UNTIL SNUG TIGHT. ALTERNATE WASHERS AND NUTS ARE PROVIDED IN TABLE NOTE 1.
2. INSTALLATION ON CONCRETE PROVIDES THE HIGHEST ALLOWABLE VALUES. CONFIRM WITH THE DESIGN PROFESSIONAL BEFORE INSTALLING ON OTHER SUPPORTING SURFACES.
3. USE 1/4"X4-1/2" MITEK PRO SERIES WS SCREWS AT TOP CONNECTIONS WITH A 2x FILLER. IF THE TOP OF PANEL IS IN DIRECT CONTACT WITH THE COLLECTOR ABOVE (TOP PLATES, HEADER, BEAM, ETC.) USE1/4 x 3" (MINIMUM).
4. FOR INSTALLATIONS WITH A FILLER GREATER THAN 1-1/2" ABOVE, OR WHEN SPECIFIED BY THE DESIGN PROFESSIONAL, ADJACENT KING POSTS TO BRACE THE OUT-OF-PLANE HINGE CAN BE CONNECTED WITH 1/4" DIA. SCREWS THROUGH PRE-PUNCHED HOLES AT THE PANEL EDGES.

B

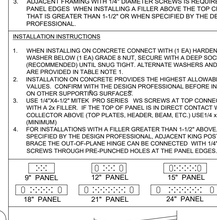

C



NOTES:
A. SURFACE FINISHES, CONNECTORS AND FIXTURES ARE ATTACHED TO THE PANEL FACE WITH # 10 SELF-TAPPING SCREWS SPACED NO LESS THAN 2-1/4" OC.
B. ATTACHMENTS TO THE PANEL EDGES ARE MADE WITH # 12 SELF-TAPPING SCREWS.
C. STRUCTURAL CONNECTIONS ARE TO BE DESIGNED BY THE DESIGN PROFESSIONAL.
D. STRUCTURAL HARDWARE USED TO TRANSFER LOADS SHOULD NOT EXCEED 12 GAUGE.

D

REVISIONS	DATE

FRAMING DETAILS - HFX PANELS

THIS DETAIL SHEET IS NOT PROPRIETARY AND IS NOT REQUIRED FOR PLAN SUBMITTAL WITH MITEK®/HARDY FRAME® PRODUCTS

HARDY FRAME® SHEARWALL SYSTEM
1739 PALMA DRIVE, SUITE 200, VENTURA, CA 93003
TELEPHONE: 800 754-3000 / www.hardyframe.com

MiTek®

DATE: 1-1-2018

HFX2

BUILDING AND SAFETY DIVISION
Department of Public Works
APPROVED
UNDER LOS ANGELES COUNTY CODE
TITLES 26, 30 AND 31
PUBLIC WORKS
03/27/2024 2:06:40 PM
This set of plans and specifications shall be kept at the job site at all times and it is unlawful to make any changes, modifications or deviations to these plans or specifications without the prior written permission of the Building Official. The stamping of this set of plans and specifications SHALL NOT, under any circumstances, be deemed to permit or to be an approval of any work or activity that violates any provisions of any County Ordinance or State Law

REGISTERED PROFESSIONAL ENGINEER
LIONEL J. GARCIA
No. 4653
STRUCTURAL
STATE OF CALIFORNIA

G&G STRUCTURES, INC.
CIVIL & STRUCTURAL ENGINEERING
24702 NARBONNE AVE.
LOMITA, CA 90717
TEL (310) 294-8111 FAX (310) 294-8112

sheet description
HARDY FRAME DETAILS

All ideas, designs, and plans indicated or represented by this drawing are the property of G&G STRUCTURES, INC., and were created and developed for use in connection with this specific project. None of such ideas, designs or plans shall be used by or disclosed to any person, firm or corporation for any purpose without the written permission of G&G STRUCTURES, INC.

CABANA
#2 PORTUGUESE BEND ROAD
ROLLING HILLS, CA 90274

date: 11/19/2023
scale: N.T.S
drawn by: R.R.
job no.: 23-197
sheet:

HFX

Attachment E

SPECIFICATIONS

1. SCOPE: THE WORK OF THIS SECTION INCLUDES EVERYTHING NECESSARY FOR AND INCIDENTAL TO EXECUTING AND COMPLETING ELECTRICAL WORK, EXCEPT AS OTHERWISE HEREINAFTER SPECIFICALLY EXCLUDED.

2. GUARANTEE: CONTRACTOR SHALL PROVIDE TO THE OWNER A WRITTEN GUARANTEE, IN COMPLIANCE WITH DIVISION 1, AGAINST DEFECTS IN MATERIAL AND WORKMANSHIP FOR ONE (1) YEAR, UPON FINAL ACCEPTANCE OF PROJECT BY OWNER.

3. TESTING AND ADJUSTMENT: UPON COMPLETION OF ALL ELECTRICAL WORK, ELECTRICAL CONTRACTOR SHALL ADJUST AND TEST ALL CIRCUITS, OUTLETS, SWITCHES, LIGHTS, MOTORS AND ANY OTHER ELECTRICAL ITEMS TO INSURE PERFECT OPERATION OF ALL ELECTRICAL EQUIPMENT. ITEMS, FIXTURES AND PARTS IN NEED OF CORRECTION AND DISCOVERED DURING SUCH TESTING SHALL BE IMMEDIATELY REPAIRED OR REPLACED WITH ALL NEW EQUIPMENT AND THAT PART OF THE SYSTEM SHALL THEN BE RETESTED. ALL SUCH REPLACEMENT OR REPAIR SHALL BE DONE AT NO ADDITIONAL COST TO THE OWNER.

4. SITE INSPECTION: THE CONTRACTOR SHALL CAREFULLY EXAMINE THE SITE AND EXISTING BUILDINGS, SHALL COMPARE THE DRAWINGS WITH THE EXISTING ELECTRICAL INSTALLATIONS, AND SHALL THOROUGHLY FAMILIARIZE HIMSELF WITH ALL EXISTING CONDITIONS WITHIN THE SCOPE OF THIS WORK. BY THE ACT OF SUBMITTING A BID, THE CONTRACTOR WILL BE DEEMED TO HAVE MADE SUCH EXAMINATION AND TO HAVE ACCEPTED SUCH CONDITIONS, AND TO HAVE MADE ALLOWANCE THEREOF IN PREPARING HIS FIGURE.

5. LOCATIONS AND ACCESSIBILITY: CONTRACTOR SHALL FULLY INFORM HIMSELF REGARDING PECULIARITIES AND LIMITATIONS OF THE SPACES AVAILABLE FOR INSTALLATION OF WORK AND MATERIALS FURNISHED AND INSTALLED UNDER THIS DIVISION. DRAWINGS INDICATE DESIRED LOCATION AND ARRANGEMENT OF PIPING, EQUIPMENT, AND OTHER ITEMS, AND ARE TO BE FOLLOWED AS CLOSELY AS POSSIBLE. WORK SPECIFIED AND NOT CLEARLY DEFINED BY DRAWINGS SHALL BE INSTALLED AND ARRANGED IN A MANNER SATISFACTORY TO ARCHITECT, THEY SHALL BE MADE BY CONTRACTOR WITHOUT ADDITIONAL CHARGES, PROVIDED THE CHANGE IS ORDERED BEFORE WORK IS INSTALLED AND NO EXTRA MATERIAL ARE REQUIRED.

6. CLEANUP: AFTER COMPLETION OF WORK UNDER THIS SECTION, CLEAN UP ALL RESULTANT DEBRIS FROM THIS WORK AND REMOVE FROM THE SITE.

7. CUTTING AND PATCHING: THE CONTRACTOR SHALL DO ALL CUTTING AND PATCHING OF THE EXISTING CONSTRUCTION WORK WHICH MAY BE REQUIRED FOR THE PROPER INSTALLATION OF THE ELECTRICAL WORK. ALL PATCHING SHALL BE OF THE SAME MATERIALS, WORKMANSHIP AND FINISH AS, AND SHALL ACCURATELY MATCH ALL SURROUNDING WORK.

8. DRAWINGS AND SPECIFICATIONS: ELECTRICAL DRAWINGS ARE DIAGRAMMATIC IN SOME RESPECTS. SIZES AND LOCATION OF EQUIPMENT AND WIRING ARE SHOWN TO SCALE WHERE POSSIBLE, BUT MAY BE DISTORTED FOR CLARITY ON THE DRAWINGS. FINAL LOCATIONS OF OUTLETS AND EQUIPMENT SHALL BE AS SHOWN IN ENLARGED DETAILS OR AS APPROVED BY THE LIGHTING CONSULTANT. IT IS NOT WITHIN THE SCOPE OF DRAWINGS TO SHOW ALL NECESSARY BENDS, OFFSETS, PULLBOXES, AND OBSTRUCTION. IT SHALL BE THE RESPONSIBILITY OF THE CONTRACTOR TO INSTALL HIS WORK TO CONFORM TO THE STRUCTURE, PRESERVE HEADROOM AND KEEP OPENINGS AND PASSAGEWAYS CLEAR.

9. WIRING AND CONNECTIONS OF EQUIPMENT BY OTHERS: FURNISH AND INSTALL WIRING FOR POWER REQUIREMENT AS SHOWN ON DRAWINGS. COORDINATE WITH OTHER TRADES ON DETAILS OF INSTALLATION. THE TERM "WIRING" AS USED HEREIN, INCLUDES FURNISHING AND INSTALLING CONDUIT, WIRE, JUNCTION BOXES, DISCONNECTS, AND MAKING CONNECTIONS. CHECK LIGHTING CONSULTANT AND SPECIFICATIONS FOR EQUIPMENT TO BE INSTALLED BY OTHERS. ELECTRICAL DRAWINGS INDICATE IN GENERAL THE INTENT AND SCOPE OF SYSTEMS. CONTRACTOR SHALL BE RESPONSIBLE FOR PROPER WIRING AND NECESSARY ELECTRICAL ADJUSTMENTS TO EQUIPMENT TO CONFORM TO SPECIFIED REQUIREMENTS OF THE EQUIPMENT.

10. SHOP DRAWINGS: WITHIN FOURTEEN (14) DAYS AFTER RECEIPT OF CONTRACT, SUBMIT TO ARCHITECT SEVEN (7) COMPLETE SETS OF DRAWINGS FOR ALL ELECTRICAL EQUIPMENT AND DEVICES. DO NOT DELIVER THESE ITEMS TO THE JOB SITE UNTIL SHOP DRAWINGS HAVE BEEN REVIEWED AND APPROVED BY ARCHITECT AND ELECTRICAL ENGINEER.

11. OUTLET BOXES: OUTLET BOXES SHALL BE ONE PIECE PRESS STEEL BOX. "4S" MINIMUM SIZE OR LARGER AS REQUIRED PER CODE.

12. CONDUIT SHALL BE STANDARD STEEL RIGID, IMC OR EMT (THIN WALL) ACCORDING TO CEC CODE AND LANDLORD REQUIREMENTS. CONDUIT SHALL BE CONCEALED IN FINISHED AREAS, EXCEPT AS OTHERWISE APPROVED BY ARCHITECT. EMT CONNECTIONS SHALL BE COMPRESSION OR SET SCREW TYPE. LIQUIDTIGHT FLEXIBLE METAL CONDUIT SHALL BE USED FOR MOTOR CONNECTIONS, AND COMPLY WITH ARTICLE 350.

    PVC CONDUIT SHALL BE USED ONLY FOR UNDERGROUND CONDUIT.

    FLEXIBLE METAL CONDUIT SHALL BE INSTALLED PER ARTICLE 348.

    MC CABLE SHALL BE SUITABLE FOR INSTALLATION IN CONCEALED AREAS SUCH AS ABOVE CEILINGS AND INSIDE WALL CONSTRUCTION AND COMPLY WITH ARTICLE 330. MINIMUM CONDUIT SIZE SHALL BE 1/2".

13. WIRE AND CABLE: ALL CONDUCTORS SHALL BE DELIVERED TO THE SITE IN THEIR ORIGINAL UNBROKEN PACKAGES, PLAINLY MARKED OR TAGGED AS FOLLOWS:

14. UNDERWRITERS' LABELS.
    SIZE, TYP. AND INSULATION OF WIRE.
    NAME OF THE MANUFACTURING COMPANY AND THE TRADE NAME OF THE WIRE.
    MONTH AND YEAR WHEN MANUFACTURED WHICH DATE SHALL NOT EXCEED TWO (2) YEARS PRIOR TO THE DATE OF DELIVERY TO THE SITE.

15. CONDUCTORS FOR SIZES #14 THRU #10 SHALL BE SOLID SOFT DRAWN COPPER, 600 VOLT, TYPE THHN/THWN INSULATION EXCEPT AS HEREINAFTER SPECIFIED.

16. CONDUCTORS FOR SIZES #8 AND LARGER SHALL BE STRANDED COPPER WITH 600 VOLT, TYPE THHN/THWN INSULATION.

17. MINIMUM WIRE SIZE SHALL BE #12 A.W.G. UNLESS SPECIFICALLY NOTED AS #14.

UTILITY NOTES:

1. ELECTRICAL CONTRACTOR MUST OBTAIN APPROVED CONSTRUCTION DRAWINGS FROM THE RESPECTIVE UTILITY COMPANIES AND INCLUDE ALL MATERIAL AND WORK AS INDICATED THEREON IN THIS BID PRICE. IF UTILITY DRAWINGS ARE NOT AVAILABLE WHEN BIDS ARE SUBMITTED. SO INDICATE AND ADVISE ELECTRICAL ENGINEER ACCORDINGLY.
2. ELECTRICAL CONTRACTOR SHALL VERIFY EXACT LOCATION OF UTILITY PANELS, CONDUITS AND XFMR WITH RESPECTIVE UTILITY COMPANIES PRIOR TO START OF ANY SITE WORK.
3. ELECTRICAL CONTRACTOR SHALL SUBMIT THE MAIN SWITCHBOARD SHOP DRAWING TO POWER COMPANY REPRESENTATIVE PRIOR TO START OF ANY WORK AND OBTAIN APPROVED DRAWINGS.
4. GENERAL CONTRACTOR SHALL SUBMIT SINGLE LINE DIAGRAM, SITE PLAN AND LOAD INFORMATION DRAWINGS TO UTILITY POWER COMPANY TO OBTAIN SERVICE REPORT INDICATING THE AVAILABLE FAULT CURRENT AND SERVICE ROUTING.

GENERAL NOTES

1. ALL WORK SHALL COMPLY WITH THE STATE OF CALIFORNIA, TITLE 24 AND ALL OTHER GOVERNING CODES AND ORDINANCES. 2022 CEC.& 2022 CALIFORNIA ENERGY CODE.

2a. ELECTRICAL SWITCHES AND CONTROLS/MOUNTING HEIGHTS/DISABLED ACCESS: 2022 CBC NOW REQUIRES CONTROLS AND SWITCHES INTENDED TO BE USED BY OCCUPANTS OF THE ROOM OR AREA TO BE LOCATED:
    2a.1 NO MORE THAN 48–INCHES, MEASURED FROM THE TOP OF THE OUTLET BOX,
    2a.2 NO LESS THAN 15 INCHES, MEASURED FROM THE BOTTOM OF THE OUTLET BOX, TO THE LEVEL OF THE FINISHED FLOOR OR WORKING PLATFORM.

2b. ELECTRICAL RECEPTACLE OUTLETS/MOUTING HEIGHTS/DISABLED ACCESS: 2022 CBC REQUIRES ELECTRICAL RECEPTACLE OUTLETS ON BRANCH CIRCUITS OF 30 AMPERES OR LESS AND COMMUNICATION SYSTEM RECEPTACLETO BE LOCATED:
    2b.1 NO MORE THAN 48–INCHES, MEASURED FROM THE TOP OF THE RECEPTACLE OUTLET BOX OR RECEPTACLE HOUSING.
    2b.2 NO LESS THAN 15–INCHES, MEASURED FROM THE BOTTOM OF RECEPTACLE OUTLET BOX OR RECEPTACLE HOUSING, TO THE LEVEL OF THE FINISHED FLOOR OR WORKING PLATFORM.

3. REFER TO THE ARCHITECTURAL REFLECTED CEILING PLAN FOR THE EXACT TYPE AND LOCATION OF LIGHT FIXTURES.

4. REFER TO THE ARCHITECTURAL POWER AND TELEPHONE PLAN FOR THE EXACT LOCATION AND MOUNTING HEIGHTS AND TYPES OF ALL OUTLETS (RECEPTACLES, TELEPHONES, CRT'S, CLOCKS, ETC.).

5. ALL ELECTRICAL WORK, ITEMS, DEIVCES, ETC. SHALL CONFORM TO THE REQUIREMENTS OF THE BASE BUILDING SPECIFICATION.

6. ALL OUTLETS SHALL BE INSTALLED AT THE HEIGHTS INDICATES ON THE SYMBOL LIST UNLESS OTHERWISE NOTED ON THE DRAWINGS.

7. EVERY OUTLET HEIGHT SHALL BE VERIFIED ON EACH WALL WITH THE ARCHITECT OR INTERIOR DESIGNER TO ENSURE THE PROPER HEIGHT AND LOCATION WITH RESPECT TO CABINET, EQUIPMENT, ETC.

8. ALL WORK/MATERIALS SHOWN ON PLANS SHALL BE NEW UNLESS OTHERWISE INDICATED.

9. UNLESS INSTRUCTED OTHERWISE, THE ELECTRICAL CONTRACTOR SHALL OBTAIN AND PAY FOR ALL PERMITS, LICENSES, AND FEES REQUIRED FOR INSTALLATION OF THE ELECTRICAL WORK. FURNISH FINAL CERTIFICATE OF INSPECTION OR WRITTEN EVIDENCE OF ACCEPTANCE BY INSPECTION AUTHORITIES FOR ALL WORK INSTALLED.

10. BEFORE STARTING ANY WORK, THE ELECTRICAL CONTRACTOR SHALL EXAMINE THE COMPLETE SET OF DRAWINGS FOR ALL TRADES, INCLUDING ARCHITECTURAL, HEATING–VENTILATING–AIR CONDITIONING AND PLUMBING. VERIFY ALL DIMENSIONS, SPACE REQUIREMENTS AND POINTS OF CONNECTION TO ALL EQUIPMENT. MAKE ANY MINOR ADJUSTMENTS NECESSARY TO AVOID CONFLICT WITH THE BUILDING STRUCTURE AND THE WORK OF OTHER TRADES.

11. UPDATE PANEL CARDS INDICATING CIRCUIT'S SPECIFIC FUNCTION/LOCATION.

12. AS–BUILT DRAWINGS SHALL BE MAINTAINED AND REFLECT THE FOLLOWING:
    A. ANY DEVIATION FROM THE CIRCUIT NUMBERS ON WORKING DRAWINGS SHALL BE INDICATED ON AS–BUILTS.
    B. THE ADDITION, DELETION OR RELOCATION OF OUTLETS AS SHOWN ON WORKING DRAWINGS SHALL BE INDICATED ON "AS–BUILTS".

13. ALL CONDUIT OTHER THAN USED FOR ELECTRICAL WIRING SHALL HAVE #12 GALVANIZED PULL WIRE INSTALLED BY THE ELECTRICAL CONTRACTOR.

14. ALL EXTERIOR RECEPTACLES SHALL BE WEATHER–PROOF TYPE. AND GFCI PROTECTION.

15. ALL WORK SHALL BE DONE IN ACCORDANCE WITH LOCAL & STATE CODES.

16. THE ELECTRICAL CONTRACTOR SHALL VERIFY THE EXACT LOCATION, DEPTH AND ADEQUACY OF ALL SERVICES BEFORE STARTING AND SHALL NOTIFY THE GENERAL CONTRACTOR IF SAID CONNECTION ARE NOT IN THE LOCATION SHOWN OR ARE NOT OF SUFFICIENT SIZE OR DEPTH TO MAKE THIS CONNECTION IN COMPLIANCE WITH THIS PLAN.

17. THESE PLAN INDICATE APPROXIMATE DIMENSION ONLY FOR EQUIPMENT OR FIXTURE. EXACT DIMENSIONS MUST BE OBTAINED FROM THE EQUIPMENT MANUFACTURER.

18. THE CONDUIT & PIPING SHOWN ON PLANS ARE SCHEMATIC ONLY. INSTALL DUCT AND PIPING TO SUIT THE STRUCTURAL CONDITIONS. PROVIDE ALL NECESSARY OFFSETS AS REQUIRED. VERIFY WITH ARCHITECTURAL, STRUCTURAL, HVAC. FIRE PROTECTION AND PLUMBING DRAWINGS.

19. ELECTRICAL CONTRACTOR SHALL PROVIDE ALL ELECTRIC DEVICE, CONTROL VALVES AND ACCESS PANELS, ETC. TO ASSURE AN APPROVED ACCEPTABLE ELECTRICAL SYSTEM.

20. SEAL ALL OPENINGS AROUND ELECTRIC CONDUITS AND PIPES (WIRES) PENETRATING THE FIRE RATED FLOOR & WALLS WITH APPROVED FIRE RETARDING MATERIALS.

21. INSTALL EXPANSION JOINTS IN THE CONDUITS AND PIPINGS AND EXPANSION LOOPS IN THE PIPING AS REQUIRED BY THE LOCAL ADMINISTRATIVE AUTHORITY.

22. ELECTRICAL CONTRACTOR SHALL COORDINATE HIS WORK CAREFULLY W/ THE PLUMBING, FIRE PROTECTION AND HVAC CONTRACTORS TO AVOID INTERFERENCES.

23. ALL CONDUITS & WIRES SUSPENDED IN BASEMENT OR CEILING SHALL BE INSTALLED AS HIGH AS POSSIBLE.

24. ALL 15 AND 20 AMPERE, 125 AND 250 VOLTS NONLOCKING RECEPTACLES SHALL BE LISTED WEATHER–RESISTANT TYPE IN A DAMP OR WET LOCATION (406. 8(A) &.(B).

25. ALL ELECTRICAL EQUIPMENT SHALL BE LISTED BY U.L. OR LOCAL GOVERNMENT APPROVED THIRD PARTY TESTING FACILITY. PER SECTION 110.3 (b)

26. NO PIPING,DUCTS OR EQUIPMENT FOREIGN TO ELECTRICAL EQUIPMENT SHALL BE PERMITTED TO BE LOCATED WITHIN THE DEDICATED SPACE ABOVE THE ELECTRICAL EQUIPMENT.

27. FUSES SHALL BE PROVIDED WITH REJECTION TYPE FUSE HOLDERS.

28. UNLESS LISTED OTHERWISE, THE AMPACITY OF 600 VOLTS OR LESS CONDUCTORS SHALL BASE ON THE TERMINALS NOT EXCEED 60° C FOR CONDUCTOR SIZE 12 THRUGH 1 AWG, OR 75° C FOR CONDUCTOR SIZES OVER 1 AWG.

29. APPLIANCES PROVIDED AND INSTALLED MEETS ENERGY STAR IF AN ENERGY STAR DESIGNATION IS APPLICABLE FOR THAT APPLIANCE AND SUBJECT TO FIELD VERIFICATION.

30. WORKING SPACE: MINIMUM 3FT WORKING SPACE SHALL BE PROVIDED AND MAINTAINED FOR ALL ELECTRICAL PANELS AND EQUIPMENT. PER CEC 110.26.

31. ELECTRICAL SERVICE EQUIPMENT SHALL BE LEGIBLY–MARKED IN THE FIELD WITH THE MAXIMUM AVAILABLE FAULT CRUUENT.(AFC) THE FIELD MARKING(S) SHALL INCLUDE THE DATED THE FAULT CURRENT CALCULATION WAS PERFORMED AND BE OF SUFFICIENT DURABILITY TO WITHSTAND THE ENVIRONMENT INVOLVED . CEC 110.24

32. PROVIDE SEPARATE NEUTRALS FOR ALL SINGLE PHASE SYSTEMS AND ALL THE MULTI–WIRE BRANCH CIRCUITS, WHERE HANDLE TIE IS NOT PERMITTED, REFER TO C.E.C. ARTICLE(S) 215.4 AND 225.7 FOR ADDITIONAL REQUIREMTNTS.

33. PROVIDE IDENTIFICATION LABEL INDICATING FEEDER SOURCE AT ALL PANELBOARDS AND SWITCHBOARDS, PER C.E.C. ARTICLE 408.4(B).

34. CONDUCTORS OF A MULTI–WIRE BRANCH CIRCUIT SHALL ORIGINATE FROM THE SAME PANELBOARD. THE BRANCH CIRCUIT SHALL BE PROVIDED WITH A MEANS THAT WILL SIMULTANEOUSLY DISCONNECT ALL UNGROUNDED CONDUCTORS AT THE POINT WHERE THE BRANCH CIRCUIT ORIGINATES. (210.4,240.15(B)(1)).

35. SWITCHBOARD AND PANEL BOARDS SHALL BE FIELD MARKED TO WARN QUALIFIED PERSONS OF POTENTIAL ELECTRIC ARC FLUSH HAZARDS (110.16).

36. LETTER FOR SHORT CIRCUIT CURRENT VALUE FROM SOUTHERN CALIFORNIA EDISON SHALL BE AVAILABLE AT THE JOB SITE FOR INSPECTION.

GENERAL LIGHTING FIXTURE COMMENTS

1. All ballasts shall be HPF, C.B.M. – E.T.I. certified, class–P equal to universal "Energy saver" VLH series, of quietest sound rating available. Provide low temperature ballasts for outdoor mounted fixtures.
2. Contractor shall be responsible for ordering proper types of trim for all recessed fluorescent fixtures and incandescent fixtures to fit the ceiling being installed. Finish trims of all recessed led fixtures shall match ceiling finish as directed by architect.
3. The contractor shall verify the type of ceiling before ordering any fixtures. He is fully responsible to provide all mounting brackets for all ceiling conditions, at no extra charge to the owner.
4. All fixtures shall bear U.L. label.
5. Acrylic lens shall be 100% pure, virgin, acrylic.
6. All lighting fixtures shall be installed in accordance with the manufacturers instructions.
7. Recessed fixtures in fire rated ceiling shall be approved for the fire rating of the ceiling.
8. Fixtures in luminous ceiling of ceiling cavities or soffites shall be approved for type of installation.
9. Stem lengths pendent fixtures shall be one piece without couplings, with finish to match canopy and with swivel hanger legally approved for weight supported and for earthquake protection. Provide wedge type canopy for fixtures to be installed on sloped ceiling.
10. Outdoor fixtures and fixtures installed in damp location shall be approved for wet locations.
11. Verify letter size and color of internally illuminated exit signs with local authorities prior to submittal of shop drawings.
12. Recessed fixtures shall be pre–wired to attached J–Box in accordance with local code requirements. Fixtures shall be approved for the maximum number of wires going in and out of the fixtures as shown on plans. Attached J–Boxes shall be accessible per C.E.C.
13. ALL LIGHTING FIXTURES ARE TO BE CERTIFIED BY CALIFORNIA ENERGY COMMISSION.

SYMBOL LIST

	HOME RUN		
	CONDUIT CONCEALED IN WALL OR CEILING UNLESS NOTED		
	CONDUIT CONCEALED IN WALL, FLOOR, UNDERGROUND OR UNDER FLOOR UNLESS NOTED		
#10	HOME RUN TO PANEL. HASH MARKS INDICATE QUANTITY OF CONDUCTORS. NO HASH MARK INDICATES 1/2"C–2#12&1#12GROUND #10 INDICATES #10 AWG CONDUCTORS, SIZE OF CONDUIT SHALL BASE ON N.E. CODE.		
1 2 3	ROOM NUMBER	C.O.	CONDUIT ONLY
N.I.C.	NOT IN CONSTRUCTION		
W.P.	WEATHER PROOF	N.T.S.	NOT TO SCALE
5" BOX	4 11/16" SQ.X2 1/8" D.BOX	○	CONDUIT UP
V.L.	VERIFY LOCATION	●	CONDUIT DOWN

FL'R.	WALL	CEIL.	DESCRIPTION
	$		SINGLE POLE TOGGLE SWITCH (SEE NOTE 2a)
	$a,b		SINGLE POLE SW,SUBSCRIPT INDICATES OUTLETS CONTR'LD PROVIDE SEPARATE SW. FOR EACH IN GANG ASSEMBLY(SEE NOTE 2a)
	$2		TWO POLE SWITCH (SEE NOTE 2a)
	$3		THREE WAY SWITCH (SEE NOTE 2a)
	$4		FOUR WAY SWITCH (SEE NOTE 2a)
	$OCC		OCCUPANCY SENSOR SWITCH (SEE NOTE 2a)
	$D		SINGLE POLE DIMMER SWITCH (SEE NOTE 2a)
	$M		MANUAL MOTOR STARTER
●	⇒	⊟	DUPLEX CONVENIENCE OUTLET (SEE NOTE 2b)
	⇒TL		20A–250V, TWISTLOCK RECEPTACLE (SEE NOTE 2b)
	⇒GFCI		RECEPTACLE GROUND–FAULT CIRCUIT INTERRUPTER
J	HJ	J	JUNCTION BOX
		⇔	SHOW WINDOW RECEPTACLE
M			METER
	⊠		TIME CLOCK
	⊠		OVERRIDE SWITCH
	▨		MAIN SWITCHBOARD
	◢		POWER PANEL
	▭		FUSE DISCONNECT SWITCH
		OS	OCCUPANCY SENSOR
		SD	SYSTEM SMOKE DETECTOR
		CD	CARBON MONOXIDE DETECTOR
		PS	PHOTOSENSOR
	⇒		RECEPTACLE 230V 20A UNLESS NOTED
	Ⓐ		RECEPTACLE, NEMA TYPE MATCH WITH EQUIPMENT
		EF	EXHAUST FAN
		⊗	EXIT SIGN
	⊠		DEMAND RESPONSIVE CONTROL SYSTEM
		⊏⊐	EMERGENCY LIGHT
	WR GFCI		WET LOCATION RECEPTACLE. (GFCI/ WATER PROOF/WEATHER RESISTANT/EXTRA DUTY.)

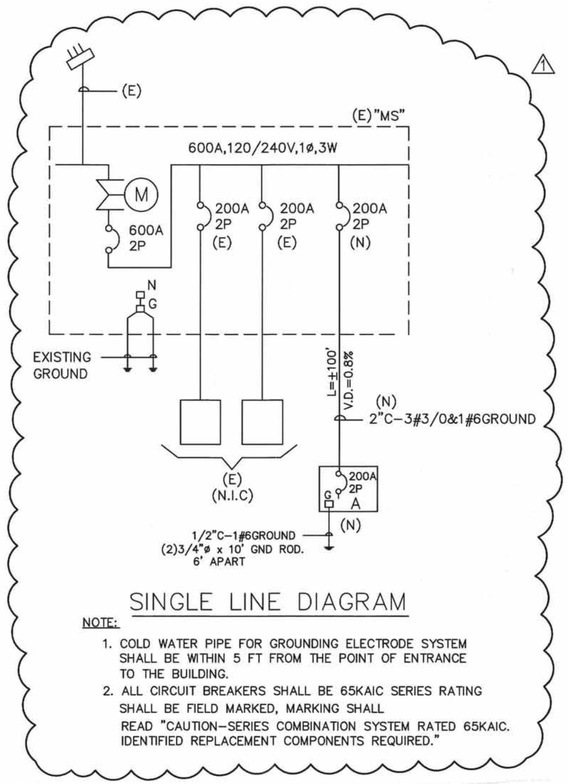

SINGLE LINE DIAGRAM

NOTE:

1. COLD WATER PIPE FOR GROUNDING ELECTRODE SYSTEM SHALL BE WITHIN 5 FT FROM THE POINT OF ENTRANCE TO THE BUILDING.
2. ALL CIRCUIT BREAKERS SHALL BE 65KAIC SERIES RATING SHALL BE FIELD MARKED, MARKING SHALL READ "CAUTION–SERIES COMBINATION SYSTEM RATED 65KAIC. IDENTIFIED REPLACEMENT COMPONENTS REQUIRED."

P TO P FAULT CURRENT CALCULATION

8/7/2024

	FROM	TO	LENGTH(FEET)	Isc	FEEDER	C VALUE	E_{LN}	f	m	Isc@Panel
F1	MS	A	100	65000	#3/0	12844	240	4.22	0.19	12350

CITY STAMP LOCATION

SCOPE OF WORK:

1. PROVIDE NEW 200 AMP, 120/240V,1 PHASE, 3 WIRE SERVICE FOR CABANA.
2. PROVIDE NEW RECEPTACLES AND POWER.
3. PROVIDE NEW LIGHTING AND T24.

REVISIONS	BY
1 08 - 07 - 24	

PERFECT DESIGN & MANAGEMENT INC.
Design & Consulting
Air–Conditioning, Plumbing, Fire Sprinkler System, Electrical, Title 24 Energy Calculation.
2416 W. Valley Blvd.
Alhambra, CA 91803
Tel: (626) 289–8808
Fax: (626) 289–4913
E–Mail:perfectaaa2@gmail.com

REGISTERED PROFESSIONAL ENGINEER
PEIFEI SHENG ZHANG
NO. E-21737
EXP. 06-30-25
ELECTRICAL
STATE OF CALIFORNIA

CABANA
2 PORTUGUESE BEND RD.
ROLLING HILLS, CA 90274

Date 08 - 07 - 24
Scale
Drawn E.C.
Job # Q23-385
Sheet **E-1**
Of 6+1 Sheets

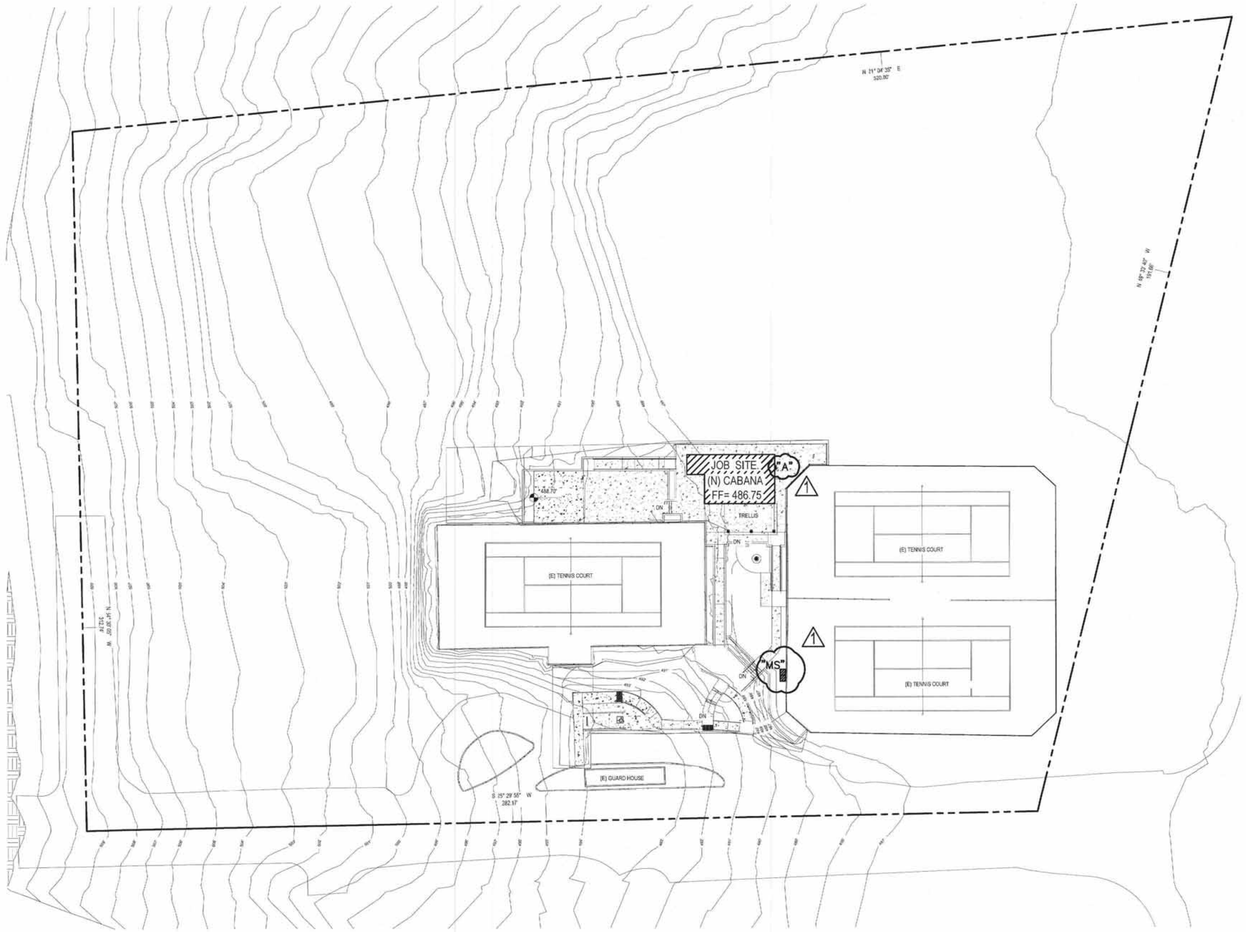

SITE PLAN
1/32"=1'-0"

eWAVE™

@SRPHEAT

☑ SELECT DESIRED VOLTAGE:
- ☐ 120 V
- ☐ 240 V

☑ SELECT DESIRED LENGTH
- ☐ 41"
- ☐ 43"

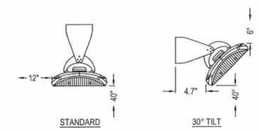







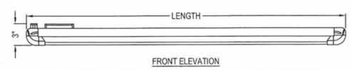

MODEL	OUTPUT WATTAGE	SUPPLY VOLTAGE	SUPPLY PHASE	SUPPLY AMP DRAW	SUPPLY VOLTAGE/ CONNECTION	DIMENSIONS	WEIGHT	SUPPORT MOUNT A X B
EW18M12	1800 W	120 V	1	15A	1Φ2W,120 VAC	41 X 10 X 3" (105 X 25 X 9 CM)	15.7 LBS (7.1 KG)	33.5 X 3.8" (85 X 9.6 CM)
EW18M12V	1800 W	120 V	1	15A	1Φ2W,120 VAC	43 X 10 X 3" (110 X 25 X 9 CM)	16.8 LBS (7.6 KG)	33.5 X 3.8" (85 X 9.6 CM)
EW18M24	1800 W	240 V	1	7.5A	1Φ2W, 240VAC	41 X 10 X 3" (105 X 25 X 9 CM)	15.7 LBS (7.1 KG)	33.5 X 3.8" (85 X 9.6 CM)
EW18M24V	1800 W	240 V	1	7.5A	1Φ2W, 240VAC	43 X 10 X 3" (110 X 25 X 9 CM)	16.8 LBS (7.6 KG)	33.5 X 3.8" (85 X 9.6 CM)

An optional remote control is available for V models

NOTES:
1. INSTALLATION TO BE COMPLETED IN ACCORDANCE WITH MANUFACTURER'S SPECIFICATIONS.
2. DO NOT SCALE DRAWING.
3. THIS DRAWING IS INTENDED FOR USE BY ARCHITECTS, ENGINEERS, CONTRACTORS, CONSULTANTS AND DESIGN PROFESSIONALS FOR PLANNING PURPOSES ONLY.
4. ALL INFORMATION CONTAINED HEREIN WAS CURRENT AT THE TIME OF DEVELOPMENT BUT MUST BE REVIEWED AND APPROVED BY THE PRODUCT MANUFACTURER TO BE CONSIDERED ACCURATE.
5. CONTRACTOR'S NOTE: FOR PRODUCT AND COMPANY INFORMATION VISIT www.CADdetails.com/info AND ENTER REFERENCE NUMBER 5029-023.

SUPERIOR RADIANT PRODUCTS
Superior Radiant Products Inc. 315 N Madison Street Fortville, IN 46040 USA
1 800 527 HEAT(4328) | tel 1 905 664 8274 | fax 1 905 664 8846 sales@superiorradiant.com | www.superiorradiant.com
SAVING ENERGY FOR FUTURE GENERATIONS

REVISIONS	BY
1 08 - 07 - 24	

PERFECT DESIGN & MANAGEMENT INC.
Design & Consulting
Air-Conditioning, Plumbing, Fire Sprinkler System.
Electrical, Title 24 Energy Calculation.
2416 W. Valley Blvd. Tel: (626) 289-8808
Alhambra, CA 91803 Fax: (626) 289-4913
E-Mail:perfectaaa2@gmail.com

REGISTERED PROFESSIONAL ENGINEER
PETER SHENG ZAO
No. E-21737
EXP. 08-31-25
ELECTRICAL
STATE OF CALIFORNIA

CABANA
2 PORTUGUESE BEND RD.
ROLLING HILLS, CA 90274

Date	08 - 07 - 24
Scale	
Drawn	E.C.
Job #	Q23-385
Sheet	E-2
Of	Sheets

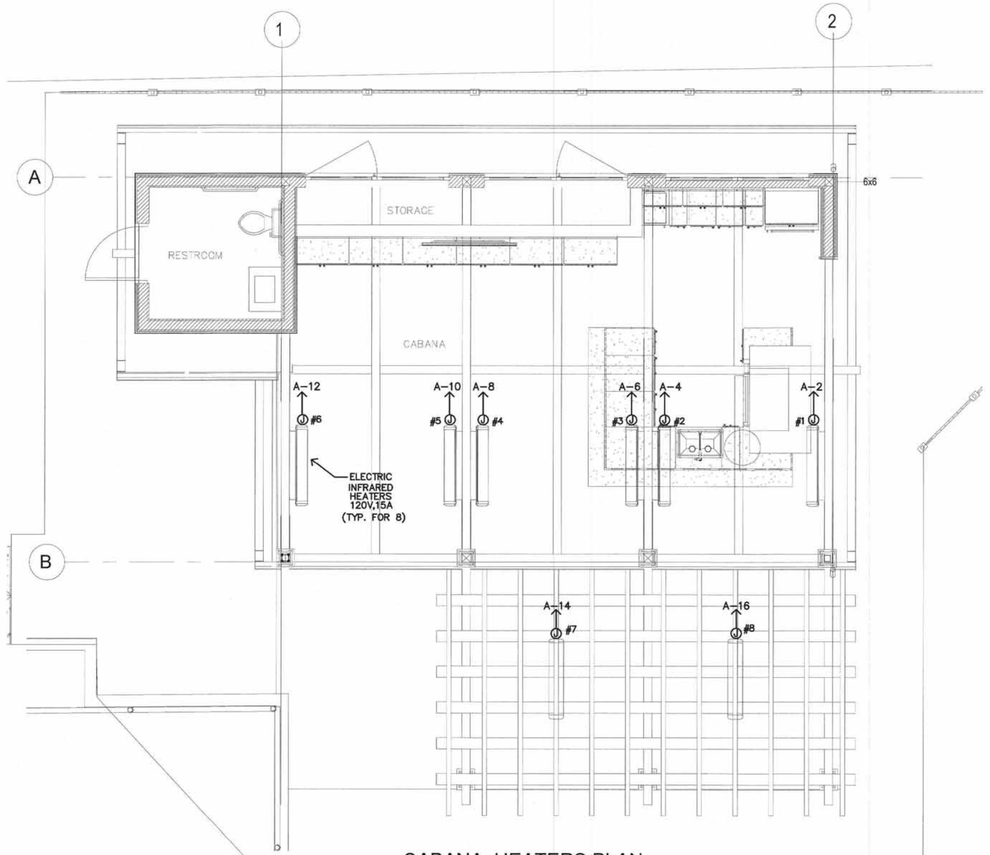

CABANA HEATERS PLAN
1/4"=1'-0"

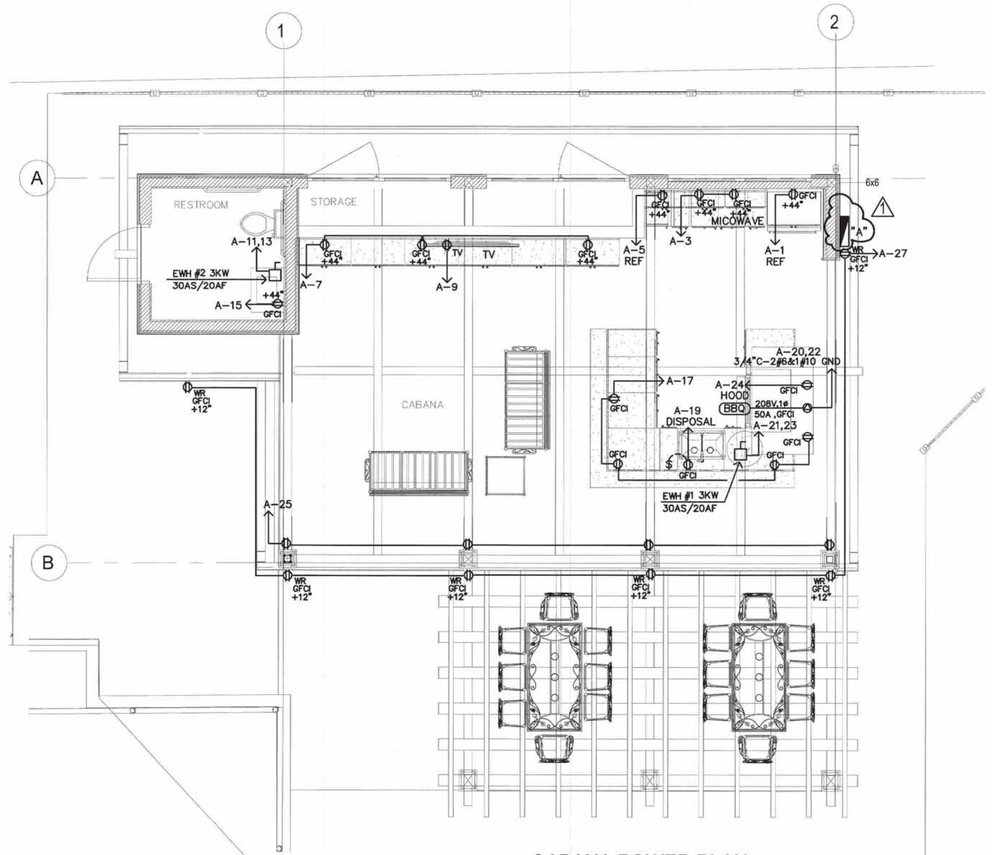

CABANA POWER PLAN
1/4"=1'-0"

PANEL "A" 120/240 V,1 Ø ,3 WIRE R. MOUNTED 200 AMPERE MAIN C.B.
LOCATION 200 AMPERE BUS FED FROM "MS"
AIC RATING: 22KAIC FULLY RATED

CCT NO.	VOLT-AMPERES L1	VOLT-AMPERES L2	DESCRIPTION	OUTLETS REC	OUTLETS LTG	CCT BKR POLE	CCT BKR TRIP AMPS	PHASE L1	PHASE L2	CCT BKR TRIP AMPS	CCT BKR POLE	OUTLETS LTG	OUTLETS REC	DESCRIPTION	VOLT-AMPERES L1	VOLT-AMPERES L2	CCT NO.
1	1000		REFRIGERATOR 1			1	20			20	1			PATIO HEATER 1	1800		2
3		360	COUNTER REC	2		1	20			20	1			PATIO HEATER 2		1800	4
5	1000		REFRIGERATOR 2			1	20			20	1			PATIO HEATER 3	1800		6
7		540	CABANA REC	3		1	20			20	1			PATIO HEATER 4		1800	8
9	600		TV			1	20			20	1			PATIO HEATER 5	1800		10
11		1500	WATER HEATER 1			2				20	1			PATIO HEATER 6		1800	12
13	1500						20			20	1			PATIO HEATER 7	1800		14
15		600	RESTROOM			1	20			20	1			PATIO HEATER 8		1800	16
17	720		COOKING COUNTER REC	4		1	20			20	1			SPARE	0		18
19		1000	DISPOSAL			1	20			50				BBQ ELEC. RANGE		4000	20
21	1500		WATER HEATER 2			2					2				4000		22
23		1500					20			20	1			HOOD		200	24
25	720		OUTDOOR REC INNER	4		1	20			20	1	LCL		CABANA LIGHTS	462		26
27		1080	OUTDOOR REC	6		1	20			20	1	LCL		WALL LTS		108	28
29										20	1	LCL		TIME CLOCK	100		30
31																	32
33																	34
35																	36
37																	38
39																	40
	7040	6580					SUB TOTALS								11762	11508	
	18802	18088	TOTAL VA/Ø	36890 VA													
			25%(LCL+LML)	168 VA													
			TOTAL VA/Ø	37058 VA													
			TOTAL AMPS	154 AMP													

Q23-385 8/7/2024

REVISIONS	BY
1 08 - 07 - 24	

PERFECT DESIGN & MANAGEMENT INC.
Design & Consulting
Air-Conditioning, Plumbing, Fire Sprinkler System,
Electrical, Title 24 Energy Calculation.
2416 W. Valley Blvd. Tel: (626) 289-8808
Alhambra, CA 91803 Fax: (626) 289-4913
E-Mail:perfectcaaa2@gmail.com

REGISTERED PROFESSIONAL ENGINEER
PETER SHENG ZHONG
No. E-21757
EXP. 06-31-25
ELECTRICAL
STATE OF CALIFORNIA

CABANA
2 PORTUGUESE BEND RD.
ROLLING HILLS, CA 90274

Date 08 - 07 - 24
Scale
Drawn E.C.
Job # Q23-385
Sheet **E-3**
Of Sheets

TABLE 5-2-(TABLE 130.1-A IN THE STANDARDS)
MULTI-LEVEL LIGHTING CONTROLS AND UNIFORMITY REQUIREMENTS

LUMINAIRE TYPE	MINIMUM REQUIRED CONTRO STEPS (PRCENT OF FULL RATED POWER[1])				UNIFORM LEVEL OF ILLUMINANCE SHALL BE ACHIEVED BY:
LINE-VOLTAGE SOCKETS EXCEPT GU-24	CONTINUOUS DIMMING 10-100 PERCENT				
LOW-VOLTAGE INCANDESCENT SYSTEMS					
LED LUMINAIRES AND LED SOURCE SYSTEMS					
GU-24 RATED FOR LED					
GU-24 SOCKETS RATED FOR FLUORESCENT >20WATTS	CONTINUOUS DIMMING 20-100 PERCENT				
PIN-BASED COMPACT FLUORESCENT >20WATTS[2]					
GU-24 SOCKETS RATED FOR FLUORESCENT ≤20WATTS	MINIMUM ONE STEP BETWEEN 30-70 PERCENT				*STEPPED DIMMING; OR *CONTINUOUS DIMMING; OR *SWITCHING ALTERNATE LAMPS IN A LUMINAIRE.
PIN-BASED COMPACT FLUORESENT ≤20WATTS[2]					
LINEAR FLUORESCENT AND U-BENT FLUORESCENT <13WATTS					
LINEAR FLUORESCENT AND U-BENT FLUORESCENT >13WATTS	MINIMUM REQUIREDCONTRO STEPS				*STEPPED DIMMING; OR *CONTINUOUS DIMMING; OR *SWITCHING ALTERNATE LAMPS IN EACH LUMINAIRE, HAVING A MINIMUM OF 4 LAMPS PER LUMINAIRE, ILLUMINATING THE SAME AREA AND IN THE SAME MANNER.
	20% TO 40%	50% TO 70%	80% TO 85%	100%	
TRACK LIGHTING	MINIMUM ONE STEP BETWEEN 30-70 PERCENT				*STEP DIMMING; OR *CONTINUOUS DIMMING; OR *SEPARATELY SWITCHING CIRCUITS IN MULTI-CIRCUIT TRACK WITH A MINIMUM OF TWO CIRCUITS.
HID >20WATTS	MINIMUM ONE STEP BETWEEN 50-70 PERCENT				*STEPPED DIMMING; OR *CONTINUOUS DIMMING; OR *SWITCHING ALTERNATE LAMPS IN EACH LUMINAIRE, HAVING A MINIMUM OF 2 LAMPS PER LUMINAIRE, ILLUMINATING THE SAME AREA AND IN THE SAME MANNER.
INDUCTION >20WATTS					
OTHER LIGHT SOURCES					

1. FULL RATED INPUT POWER OF BALLAST AND LAMP, CORRESPONDING TO MAXIMUM BALLAST FACTOR.
2. INCLUDES ONLY PIN BASED LAMPS: TWIN TUBE, MULTIPLE TWIN TUBE, AND SPIRAL LAMPS.

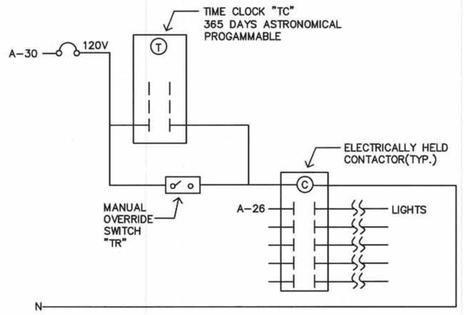

INTERIOR LIGHTING CONTROLS

- THE TIME CLOCK & OVERRIDE SWITCH SHALL BE CEC CERTIFED.
- THE TIME CLOCK SHALL PROVIDE 365 DAYS,ADVANCE HOLIDAY, ASTRONOMICAL PROGRAMMABLE SHUT OFF SWITCH AND 0-2 HOURS MAXIMUM OVERRIDE SWITCH.
- THE TIME CLOCK CAN BE TORK DG200A SERIES.
- THE TIME CLOCK SHALL BE BATTERY BACKUP 78 HOURS MIN.

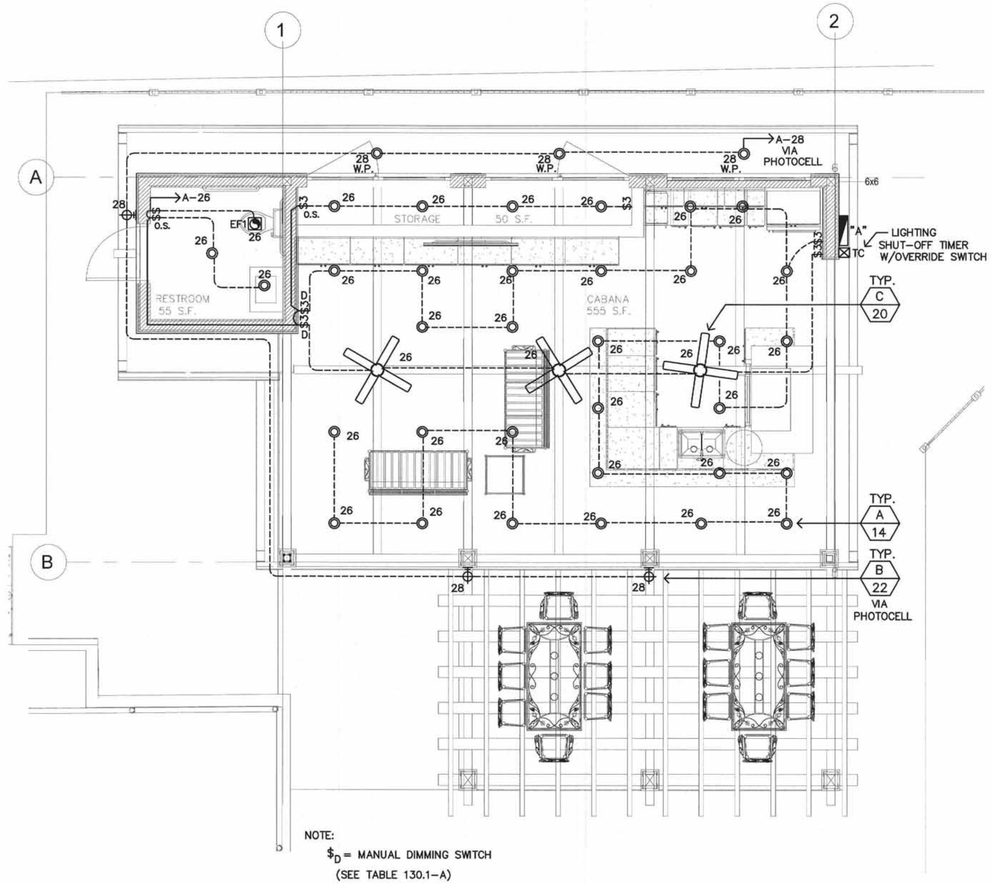

NOTE:
$_D$ = MANUAL DIMMING SWITCH (SEE TABLE 130.1-A)
$_{O.S.}$: SWITCH WITH OCCUPANCY SENSOR.

CABANA LIGHTING PLAN
1/4"=1'-0"

LIGHTING FIXTURE SCHEDULE

VOLT	SYMBOL	TYPE	MOUNTING: RECESSED	SURFACE	WALL	PENDANT	POLE	LAMPS: NUMBER	WATTAG	TYPE	LOAD V.A.	MANUFACTURER	CATALOG NO.	FINISH & REMARKS
120	◎	A 14	X					1	14	LED	14	ELITE LIGHTING	B6IC-LED-650L-DIM10-120	W/DIMMER
120	⊕	B 22			X			1	22	LED	22	SUN VALLEY LIGHTING	LCKM13-CPA	WET LOCATION
120	✕	C 20	X					2	10	LED	20	LIGHTOLOGY	HUN419552	FAN WITH LIGHT

REVISIONS | BY

PERFECT DESIGN & MANAGEMENT INC.
Design & Consulting
Air-Conditioning, Plumbing, Fire Sprinkler System.
Electrical, Title 24 Energy Calculation.
2416 W. Valley Blvd. Tel: (626) 289-8808
Alhambra, Ca 91803 Fax: (626) 289-4913
E-Mail:perfectaaa2@gmail.com

REGISTERED PROFESSIONAL ENGINEER
PEILEI SHENG ZHOU
No. E-21737
EXP. 08-31-25
ELECTRICAL
STATE OF CALIFORNIA

CABANA
2 PORTUGUESE BEND RD.
ROLLING HILLS, CA 90274

Date 08-17-23
Scale
Drawn E.C.
Job # Q23-385
Sheet E-4
Of Sheets

B6IC-LED 6" NEW CONSTRUCTION IC LED HOUSING

Catalog Number	B6IC-LED
Project Name	
Type	A

SAME DAY



900 LUMENS | IC RATED

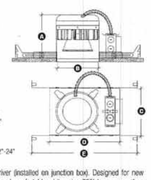

A Height = 7-1/4"
B Cut-out = 6-1/2"
C Width = 7"
D Length = ~ 80"
E Bar Hanger = 12"-24"

INPUT VOLT	INPUT FREQ	INPUT CUR.	INPUT POWER	THD	POWER FACTOR	LUMENS
120/277	50/60Hz	156mA/65mA	18W/+5%	<20%	>0.9	900
120/277	50/60Hz	116mA/56mA	14W/+5%	<20%	>0.9	650

DESCRIPTION - 6" LED dedicated New Construction IC housing with integral LED heat management casting and driver (installed on junction box). Designed for new construction installations and suitable for use in insulation covered or non-insulation covered ceilings. Lighting is smooth and comfortable while using 75% less energy than the equivalent 65W BR30 & 75W BR30 and 25% less than the common 18W & 26W CFL luminaire. Plus, the eco-friendly Elite LED system features 70% lumen maintenance at 72,000 hours life, with Energy Star and California Title-24 compliances.

FEATURES - Greater light output than an 18W & 26W CFL or a 65W BR30 & 75W BR30 while consuming less than 14W & 18W of power. Elite LED luminaires are ideally suited for use in hospitality, health care, commercial, retail and residential applications.

PROUDLY ASSEMBLED IN AMERICA

OPTICS - Elite's optics gather the light scattered by the LED chip, shape it into a functional beam with state of the art reflectors, integrate the light through a smooth lens to minimize brightness, then top it all off with a glare-reducing cone that has a 55-degree cut-off. Now you have the Elite engineered, superior quality, light engine; producing over 650 & 900 lumens.

DURABILITY - Die-cast aluminum heat management system is engineered for extremely long life and service period. Heat sink is attached to top of housing. The LED light engine is attached to the die-cast heat sink and is easily replaceable and upgradable. Life tests have shown the Elite light engine output will be maintained at 70% of initial at 50,000 hours of operation. Our LED driver is rated for 50 to 60 Hz, produces less than 20% THD, has a power factor between 0.90 and 1.00 and is thermally protected for additional safety. Elite's driver is installed on the junction box cover so it may be serviced from below the ceiling.

REPEATABLE - All Elite LED luminaries are rated at 90+ CRI as rated and tested to LM-79 and LM-80 standards by a certified laboratory. California Title 24-2013 and Energy Star compliance are standard.

DIMMABLE - The Elite LED system is fully dimmable down to 10% of initial light output with a 0-10 Volt dimmer when ordered with the following option (DIM10-MVOLT). Fixtures can be shipped with a Lutron Hi-lume A series Driver which can be dimmed with Lutron Dimming Systems when ordered with the following options (TCD-LUTH, 277-LUTH). Triac & Electronic Low Voltage dimming driver also available when ordered with the following options (DIMTR-120). Consult Factory for details.

HOUSING - Die-formed aluminum and galvanized steel for maximum heat dissipation and rust protection. Housing adjusts vertically in plaster frame to accommodate 1/2" to 1-3/8" thick ceiling. Housing is IC rated for direct contact with insulation and can be used in IC and NON-IC applications. May be installed in 2" x 8" joist construction.

JUNCTION BOX - UL Listed for through-branch circuit wiring, provided with four ½" knockouts, one ¾" knockout and four Romex knockouts with true pry-out slots and strain clamps. Designed for straight through conduit runs. Driver is installed on the junction box cover so it may be serviced from below the ceiling.

THERMAL PROTECTION - Standard thermal protection device guards against improper installation and misuse of insulation material.

BAR HANGERS - Preinstalled bar hangers allow housing to be positioned and locked at any point within a 24" joist span. They can be positioned on either the long or short axis of the housing and can be shortened for 12" joists. They contain a double-headed nail rail for secure attachment into the joist. Bar hanger nails are installed on a 20º downward angle for better contact, and the 90º pivoting mounting plate makes installation fast and accurate. Bar hangers can fit onto T-Bar spines with additional slots and holes for special mounting methods if necessary.

OUR WORD - The Elite LED lighting system carries a five-year carefree warranty for parts and components. (Labor not included.)

LISTING
c-UL-us - listed for Damp location
c-UL-us - listed for feed Through Wiring
c-UL-us - listed for Direct Contact With Insulation
LM79 / LM80
Covered by U.S. Patent Numbers: D642317SS, 7717390B1, D615239S

DIMMING INFORMATION
DIMTR (Triac & Electronic Low Voltage Dimming)
DIM10 (0-10V Dimming)
LUTH (Lutron® Hi-lume® Dimming)

ITEM SELECTOR: Example: **B6IC-LED-900L-DIM10-MVOLT-MD-30K-AT-LE01-W-WH** ◄ LENSED TRIMS AVAILABLE ONLY IN **650 LUMENS**

B6IC-LED																				
TYPE	650L SERIES	900L SERIES	OPTICS	DCT	CRI	6IN HOUSING	EMERGENCY	TRIM							BAFFLE	REFLECTOR	TRIM FINISH	
B6IC-LED	☐ 650L-DIM7R-120 ☐ 650L-LUTH-120 ☐ 650L-LUTH-277 ☐ 650L-DIM10-MVOLT	☐ 900L-DIM7R-120 ☐ 900L-LUTH-120 ☐ 900L-LUTH-277 ☐ 900L-DIM10-MVOLT	☐ MD (Medium)	☐ 27K ☐ 30K ☐ 35K ☐ 40K ☐ 50K (65+ CRI Only)	☐ 80+ ☐ 90+	☐ AT	☐ EM65	☐ .635" ☐ .602" ☐ .661" ☐ .622" ☐ .650" ☐ .678" ☐ .670"	☐ .635" ☐ .638" ☐ .607" ☐ .659" ☐ .658" ☐ .641" ☐ .642"	☐ .602" ☐ .642" ☐ .607" ☐ .601" ☐ .601" ☐ .605" ☐ .602"	☐ .667" ☐ .661" ☐ .668" ☐ .685" ☐ .686" ☐ .688" ☐ .696"	☐ WH ☐ SF ☐ BK ☐ BNG ☐ NI ☐ BN ☐ SNG	☐ RW ☐ CW ☐ WW ☐ WG ☐ NR ☐ WB ☐ WH	☐ WH ☐ SF ☐ BK ☐ DBH ☐ DH ☐ PB ☐ NI ☐ SN ☐ BZ

elite Lutron

WWW.IUSEELITE.COM • TEL 1-877-375-5555 • FAX 1-877-375-3333

ISSUE 10529 Rev. B.1

382

Lightology

Dempsey Ceiling Fan with Light

TYPE "C"



Description:
Dempsey Ceiling Fan with Light features a Brushed Nickel motor with reversible black oak/chocolate oak blades or a Fresh White motor with reversible blonde oak/fresh white blades - all with White cased glass. WhisperWind motor delivers ultra-powerful air movement with whisper-quiet performance. Features a 52 inch blade span and 13 degree blade pitch. Two 10 watt, 120 volt 3000K 80CR LED bulb, one 2 inch and one 3 inch downrods, and handheld remote control are included. Limited lifetime warranty. 52 inch width x 14.34 inch height.

Shown in: Brushed Nickel

List Price: $331.67
Our Price: $199.00

Shade Color: N/A
Body Finish: Brushed Nickel
Lamp: 2 x LED/10W/120V LED
Wattage: 20W
Dimmer: Included
Dimensions: 14.34"H x 52"W

Product Number: **HUN419552**					
Company:		Fixture Type:		Date:	Jun 12, 2016
Project:		Approved By:			

Address: 1718 W. Fullerton Ave, Chicago IL 60614 Phone: 866-954-4689 Fax: (773) 883-0131 www.Lightology.com

6 INCH NEW CONSTRUCTION IC LED HOUSING

LED 6"

SOLID STATE LIGHTING

LCKM-CPA WALL MOUNT-PLED

S P E C I F I C A T I O N S

PROJECT NAME:

FIXTURE TYPE: B

FIXTURE HOUSING
Optical Crown, Arms and Hub are welded to create a one piece unitized Housing consisting of precise heavy wall cast low copper (A356 alloy: < 0.2%Cu) aluminum. Housing retains six Clear Patterned Acrylic lenses. Hood is fastened to the Housing with a stainless steel hinge and secured with a single stainless steel hex head cap screw 180° opposite the hinge. Hood and Optical Crown are sealed with an extruded closed cell silicone gasket. Driver/wiring accessed through top of Electrical Access Hub. All exposed hardware is stainless steel.

DECORATIVE ARM
One piece unitized decorative arm assembly and Wall Mount Plate consisting of cast low copper (A356 alloy:<0.2% Cu) aluminum. Arm is welded to the Wall Mount plate and to either the LCKM13 Hood (XKM-P) or Hub (XKM-T) or both (XKM-TP). All welds are blended to create a homogeneous appearance. Wall Mount plate affixed to mounting surface covering a recessed j-box.

PLED® OPTICS
Emitters (LED's) are arrayed on a metal core PCB panel with each emitter located on a copper thermal transfer pad and enclosed by an LED refractor. In asymmetric distributions, a micro-reflector inside the refractor re-directs. The house side emitter output towards the street side and functions as a house side shielding element. Refractors are injection molded H12 acrylic. Each LED refractor is sealed to the PCB over an emitter and all refractors are retained by an aluminum frame. LED refractors produce standard asymmetric site/area distributions. Panels are field replaceable. Housing frame retains Clear Patterned Acrylic diffusing panels.

LED DRIVER(S)
Constant current electronic with a power factor of > 90 and a minimum operating temperature of -40°F. Driver(s) is/are UL and cUL recognized. In-line terminal blocks facilitate wiring between the driver and optical arrays. Drivers accept an input of 120-277V, 50/60Hz or 347V-480V, 50,60Hz. (D - 10V dimmable Driver has a minimum of 3KV internal surge protection. Luminaire supplied with 20KV surge protector for field accessible installation.)

LED EMITTERS
High output LED's are utilized with drive currents ranging from 175mA to 525mA. 70CRI Minimum. LED's are available in standard Neutral White (4000K), or optional Cool White (5000K) or Warm White (3000K). Consult Factory for other LED options.

AMBER LED's
PCA (Phosphor Converted Amber) LED's utilize phosphors to create color output similar to LPS lamps and have a slight output in the blue spectral bandwidth. **TRA** (True Amber) LED's utilize material that emits light in the amber spectral bandwidth only without the use of phosphors.

FINISH
Electrostatically applied TGIC Polyester Powder Coat on substrate prepared with 20 PSI power wash at 140°F. Four step media blast and iron phosphate pretreatment for protection and paint adhesion. 400°F bake for maximum hardness and durability.

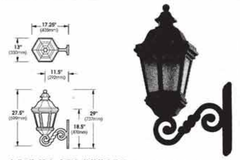

LCKM13-CPA/XKM-DT (Post Top Mount)

PATENT PENDING

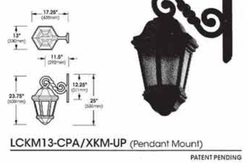

LCKM13-CPA/XKM-UP (Pendant Mount)

PATENT PENDING

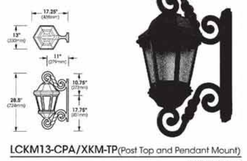

LCKM13-CPA/XKM-TP(Post Top and Pendant Mount)

PATENT PENDING

MADE IN THE USA

2019254

Sun Valley Lighting 440 West Avenue O Palmdale, CA 93551 Phone (661) 233-2266 Fax (661) 233-2001 www.svlltg.com

SUN VALLEY LIGHTING

LCKM-CPA WALL MOUNT - PLED ELECTRICAL GUIDE

LED COUNT	SOURCE TYPE	SOURCE	INITIAL LUMENS - 4000K	INITIAL LUMENS - 3000K	INITIAL LUMENS - 5000K	L70 GREATER THAN (HR) IN(2)	STARTING TEMP.	SYSTEM WATTS	VOLTS	MAX INPUT AMPS
20	LED	20 PLED® Optical Module - 175mA	1,078 - 1,198	1,024 - 1,138	1,132- 1,258	85,000+	-20°F	11	120 277	0.09 0.04
20	LED	20 PLED® Optical Module - 350mA	1,960 - 2,178	1,862 - 2,069	2,058 - 2,287	85,000+	-20°F	22	120 277	0.18 0.09
20	LED	20 PLED® Optical Module - 450mA	2,427 - 2,697	2,305 - 2,562	2,548 - 2,831	85,000+	-20°F	29	120 277	0.23 0.10
20	LED	20 PLED® Optical Module - 525mA	2,828 - 3,143	2,687 - 2,986	2,969 - 3,300	85,000+	-20°F	33	120 277	0.27 0.12
20	LED	20 PLED® Optical Module - 700mA	3,594 - 3,993	3,414 - 3,794	3,773 - 4,193	85,000+	-20°F	44	120 277	0.36 0.16

NOTES:
1. Max Input Amps is the highest of starting, operating, or open circuit currents.
2. Lumen values for LED Modules vary according to the distribution type.
3. System Watts includes the source watts and all driver components.
4. Fuse value should be sufficient to protect all wiring components. For electronic driver and LED component protection, use 180V – 20KV surge suppressors.
5. L70(14K) - TM-21 6x rule applied
   L70(14K) - Calculated = 244,000 @ 700mA

WARNING: All fixtures must be installed in accordance with local codes or the National Electrical Code. Failure to do so may result in serious personal injury.

Sun Valley Lighting 440 West Avenue O Palmdale, CA 93551 Phone (661) 233-2266 Fax (661) 233-2001 www.svlltg.com

SUN VALLEY LIGHTING

REVISIONS	BY

PERFECT DESIGN & MANAGEMENT INC.
Electrical, Plumbing, Fire Sprinkler System, Air Conditioning
Electrical Title 24 Energy Calculation.
2416 W. Valley Blvd.
Alhambra, CA 91803
Tel: (626) 289-8808
Fax: (626) 289-4913
E-Mail:perfectaan2@gmail.com

REGISTERED PROFESSIONAL ENGINEER
PETER SHENG ZHANG
No. E-21737
EXP. 08-31-25
ELECTRICAL
STATE OF CALIFORNIA

CABANA
2 PORTUGUESE BEND RD.
ROLLING HILLS, CA 90274

Date	06 - 16 - 23
Scale	
Drawn	E.C.
Job #	Q23-385
Sheet	E-4.1
Of	Sheets

STATE OF CALIFORNIA
Indoor Lighting
CALIFORNIA ENERGY COMMISSION

CERTIFICATE OF COMPLIANCE			NRCC-LTI-E
This document is used to demonstrate compliance with requirements in 110.9, 110.12(c), 130.0, 130.1, 140.6 and 141.0(b)2 for indoor lighting scopes using the prescriptive path for nonresidential and hotel/motel occupancies. It is also used to document compliance with requirements in 160.5, 170.2(e) and 180.2(b)4 for indoor lighting scopes using the prescriptive path for multifamily occupancies. Multifamily includes dormitory and senior living facilities.			
Project Name:	CABANA	**Report Page:**	**(Page 1 of 7)**
Project Address:	2 PORTUGUESE BEND RD	**Date Prepared:**	6/18/2023

A. GENERAL INFORMATION

01	Project Location (city)	ROLLING HILLS	04	Total Conditioned Floor Area (ft²)	0
02	Climate Zone	6	05	Total Unconditioned Floor Area (ft²)	610
03	Occupancy Types Within Project (select all that apply):		06	# of Stories (Habitable Above Grade)	1
• Support Areas					

B. PROJECT SCOPE

This table includes any lighting systems that are within the scope of the permit application and are demonstrating compliance using the prescriptive path outlined in 140.6 / 170.2(e) or 141.0(b)2 / 180.2(b)4 for alterations.

Scope of Work	Conditioned Spaces		Unconditioned Spaces	
01	02	03	04	05
My Project Consists of (check all that apply):	Calculation Method	Area (ft²)	Calculation Method	Area (ft²)
☐ New Lighting System				
☐ New Lighting System - Parking Garage				
☒ Altered Lighting System	Area Category Method	0	Area Category Method	610
Total Area of Work (ft²)	0		610	

C. COMPLIANCE RESULTS

If any cell on this table says "DOES NOT COMPLY" or "COMPLIES with Exceptional Conditions" refer to Table D. for guidance.

Lighting in conditioned and unconditioned spaces must not be combined for compliance per 140.6(b)1 / 170.2(e)	Allowed Lighting Power per 140.6(b) / 170.2(e) (Watts)						Adjusted Lighting Power per 140.6(a) / 170.2(e) (Watts)				Compliance Results
	01	02	03	04		05	06	07		08	09
	Complete Building 140.6(c)1	Area Category 140.6(c)2 / 170.2(e)4	Area Category Additional 140.6(c)2G / 170.2(e)4Av (+)	Tailored 140.6(c)3 / 170.2(e)4B (+)	=	**Total Allowed** (Watts)	Total Designed (Watts)	Adjustments PAF Lighting Control Credits 140.6(a)2 / 170.2(e)1B (-)	=	**Total Adjusted** (Watts) *Includes Adjustments	**05 must be >= 08 140.6 / 170.2(e)**
	(See Table I)	(See Table I)	(See Table J)	(See Table K)			(See Table F)	(See Table P)			
Conditioned					=				=		
Unconditioned		563	0		=	563	406	0	=	406	COMPLIES
Controls Compliance (See Table H for Details)											COMPLIES
Rated Power Reduction Compliance (See Table Q for Details)											

D. EXCEPTIONAL CONDITIONS

This table is auto-filled with uneditable comments because of selections made or data entered in tables throughout the form.

E. ADDITIONAL REMARKS

This table includes remarks made by the permit applicant to the Authority Having Jurisdiction.

F. INDOOR LIGHTING FIXTURE SCHEDULE

This table includes all planned permanent and portable lighting other than dwelling unit/ hotel/ motel room lighting. Multifamily dwelling unit and hotel/motel room lighting is documented in Table T. If using Table T to document lighting in multifamily common use areas providing shared provisions for living, eating, cooking or sanitation, those luminaires are not included here.

Designed Wattage: Unconditioned Spaces

01	02	03	04	05	06	07	08	09	10	
									Field Inspector	
Name or Item Tag	Complete Luminaire Description	Modular (Track) Fixture	Small Aperture & Color Change[1]	Watts per luminaire[2]	How is Wattage determined	Total Number of Luminaires	Excluded per 140.6(a)3 / 170.2(e)2C	Design Watts	Pass	Fail
A	LED 6" DOWN LT	No	NA	14	Mfr. Spec	29	No	406	☐	☐
							Total Designed Watts: UNCONDITIONED SPACES	406		

[1]*FOOTNOTE: Design Watts for small aperture and color changing luminaires which qualify per 140.6(a)4B / 170.2(e)2D is adjusted to be 75% /80% of their rated wattage. Table F automatically makes this adjustment, the permit applicant should enter full rated wattage in column 05.*

[2]*Authority Having Jurisdiction may ask for Luminaire cut sheets to confirm wattage used for compliance per 130.0(c) / 160.5(b). Wattage used must be the maximum rated for the luminaire, not the lamp.*

G. MODULAR LIGHTING SYSTEMS

This section does not apply to this project.

H. INDOOR LIGHTING CONTROLS (Not including PAFs)

This table includes lighting controls for conditioned and unconditioned spaces.

Building Level Controls

01	02	03	
		Field Inspector	
Mandatory Demand Response 110.12(c)	Shut-off controls 130.1(c) / 160.5(b)4C	Pass	Fail
NA: per H&LS	See Area/Space Level Controls	☐	☐

H. INDOOR LIGHTING CONTROLS (Not including PAFs)

Area Level Controls

04	05	06	07	08	09	10	11	12	
								Field Inspector	
Area Description	Complete Building or Area Category Primary Function Area	Manual Area Controls 130.1(a) / 160.5(b)4A	Multi-Level Controls 130.1(b) / 160.5(b)4B	Shut-Off Controls 130.1(c) // 160.5(b)4C	Primary Sky lit Daylighting 130.1(d) / 160.5(b)4D	Secondary Daylighting 130.1(d) / 160.5(b)4D	Interlocked Systems 140.6(a)1/ 170.2(e)2A	Pass	Fail
CABANA KITCHEN	Kitchen/ Food Preparation	Readily Accessible	Dimmer	Auto. Time Switch	NA: Rm < 24sf Glazing	NA: Rm < 24sf Glazing	No	☐	☐
RESTROOM	Restroom	Readily Accessible	Dimmer	Occupancy Sensor	NA: Rm < 24sf Glazing	NA: Rm < 24sf Glazing	No	☐	☐
					13				
					Plan Sheet Showing Daylit Zones:				
					LIGHTING PLAN				

I. LIGHTING POWER ALLOWANCE: COMPLETE BUILDING OR AREA CATEGORY METHODS

Each area complying using the Complete Building or Area Category Methods per 140.6(b) are included in this table. Column 06 indicates if additional lighting power allowances per 140.6(c) or adjustments per 140.6(a) are being used .

Unconditioned Spaces

01	02	03	04	05	06	
					Additional Allowance / Adjustment	
Area Description	Complete Building or Area Category Primary Function Area	Allowed Density (W/ft²)	Area (ft²)	Allowed Wattage (Watts)	Area Category	PAF
CABANA KITCHEN	Kitchen/ Food Preparation	0.95	555	527.2	No	No
RESTROOM	Restroom	0.65	55	35.8	No	No
		TOTALS:	610	563	See Tables J, or P for detail	

J. ADDITIONAL ALLOWANCE: AREA CATEGORY METHOD QUALIFYING LIGHTING SYSTEM

This section does not apply to this project.

K. TAILORED METHOD GENERAL LIGHTING POWER ALLOWANCE

This section does not apply to this project.

L. ADDITIONAL LIGHTING ALLOWANCE: TAILORED WALL DISPLAY

This section does not apply to this project.

M. ADDITIONAL LIGHTING ALLOWANCE: TAILORED FLOOR AND TASK LIGHTING

This section does not apply to this project.

N. ADDITIONAL LIGHTING ALLOWANCE: TAILORED DECORATIVE /SPECIAL EFFECTS

This section does not apply to this project.

O. ADDITIONAL LIGHTING ALLOWANCE: TAILORED VERY VALUABLE MERCHANDISE

This section does not apply to this project.

P. POWER ADJUSTMENT: LIGHTING CONTROL CREDIT (POWER ADJUSTMENT FACTOR (PAF))

This section does not apply to this project.

Q. RATED POWER REDUCTION COMPLIANCE FOR ONE-FOR-ONE ALTERATIONS

This section does not apply to this project.

R. 80% LIGHTING POWER FOR ALL ALTERATIONS - CONTROLS EXCEPTIONS

This section does not apply to this project.

S. DAYLIGHT DESIGN POWER ADJUSTMENT FACTOR (PAF)

This section does not apply to this project.

T. DWELLING UNIT LIGHTING

This section does not apply to this project.

U. DECLARATION OF REQUIRED CERTIFICATES OF INSTALLATION

Form/Title
NRCI-LTI-E - Must be submitted for all buildings

V. DECLARATION OF REQUIRED CERTIFICATES OF ACCEPTANCE

Form/Title	Systems/Spaces To Be Field Verified
NRCA-LTI-02-A - Must be submitted for occupancy sensors and automatic time switch controls.	CABANA KITCHEN; RESTROOM;

DOCUMENTATION AUTHOR'S DECLARATION STATEMENT

I certify that this Certificate of Compliance documentation is accurate and complete.

Documentation Author Name:	Documentation Author Signature:
Company: Perfect Design & Management	Signature Date: 2023-06-18
Address: 2416 W. VALLEY BLVD.	CEA/ HERS Certification Identification (if applicable):
City/State/Zip: ALHAMBRA CA 91803	Phone: (626)289-8808

RESPONSIBLE PERSON'S DECLARATION STATEMENT

I certify the following under penalty of perjury, under the laws of the State of California:

1. The information provided on this Certificate of Compliance is true and correct.
2. I am eligible under Division 3 of the Business and Professions Code to accept responsibility for the building design or system design identified on this Certificate of Compliance (responsible designer)
3. The energy features and performance specifications, materials, components, and manufactured devices for the building design or system design identified on this Certificate of Compliance conform to the requirements of Title 24, Part 1 and Part 6 of the California Code of Regulations.
4. The building design features or system design features identified on this Certificate of Compliance are consistent with the information provided on other applicable compliance documents, worksheets, calculations, plans and specifications submitted to the enforcement agency for approval with this building permit application.
5. I will ensure that a completed signed copy of this Certificate of Compliance shall be made available with the building permit(s) issued for the building, and made available to the enforcement agency for all applicable inspections. I understand that a completed signed copy of this Certificate of Compliance is required to be included with the documentation the builder provides to the building owner at occupancy.

Responsible Designer Name:	Responsible Designer Signature:
PETER ZHONG	
Company: Perfect Design & Management	Date Signed: 2023-06-18
Address: 2416 W. VALLEY BLVD	License: E-21737
City/State/Zip: ALHAMBRA CA 91803	Phone: 6262898808

PERFECT DESIGN & INVESTMENT, INC.
Design & Consulting
Air-Conditioning, Plumbing, Fire Sprinkler System,
Electrical, Title 24 Energy Calculation.
2416 W. Valley Blvd.
Alhambra, CA 91803
Tel: (626) 289-8808
Fax: (626) 289-4913
E-Mail:PERFECTAA@aol.com
E-Mail:perfectdesign2@gmail.com

REVISIONS | BY

REGISTERED PROFESSIONAL ENGINEER
PETER SHENG ZHONG
No. E-21737
EXP: 08-31-25
ELECTRICAL
STATE OF CALIFORNIA

CABANA
2 PORTUGUESE BEND RD.
ROLLING HILLS, CA 90274

Date 06-16-23
Scale
Drawn E.C.
Job # Q23-385
Sheet **E-5**
Of Sheets

STATE OF CALIFORNIA
Outdoor Lighting
CALIFORNIA ENERGY COMMISSION

CERTIFICATE OF COMPLIANCE			NRCC-LTO-E
Project Name:	CABANA	Report Page:	(Page 1 of 7)
Project Address:	2 PORTUGUESE BEND RD	Date Prepared:	6/18/2023

This document is used to demonstrate compliance with requirements in 110.9, 130.0, 130.2, 140.7, and 141.0(b)2I for outdoor lighting scopes using the prescriptive path for nonresidential and hotel/motel occupancies. It is also used to document compliance with requirements in 160.5, 170.2(e)6, 180.1(a) and 180.2(b)4bv for outdoor lighting scopes using the prescriptive path for multifamily and mixed-use occupancies. Multifamily includes dormitory and senior living facilities.

A. GENERAL INFORMATION

01	Project Location (city)	ROLLING HILLS	04	Total Illuminated Hardscape Area (ft^2)	0
02	Climate Zone	6			
03	Outdoor Lighting Zone per Title 24 Part 1 10.114 or as designated by Authority Having Jurisdiction (AHJ):				
☐ LZ-0: Very Low - Undeveloped Parkland		☐ LZ-2: Moderate - Urban Clusters		☐ LZ-4: High - Must be reviewed by CA Energy Commission for Approval	
☐ LZ-1: Low - Rural Areas		☒ LZ-3: Moderately High - Urban Areas			
05	Occupancy Types within Project				
• All Other Occupancies					

B. PROJECT SCOPE

This table includes outdoor lighting systems that are within the scope of the permit application and are demonstrating compliance using the prescriptive path outlined in 140.7 / 170.2(e)6 or 141.0(b)2I / 180.2(b)4bv for alterations.

My Project Consists of:

01	02	
☐ New Lighting System	Must Comply with Allowances from 140.7 / 170.2(e)6	
☒ Altered Lighting System	Is your alteration increasing the connected lighting load (Watts)?	● Yes ○ No
03	04	05
% of Existing Luminaires Being Altered[1]	Sum Total of Luminaires Being Added or Altered	Calculation Method
☐ < 10% ☐ >= 10% and < 50% ☐ >= 50%	0	

Please proceed to Table F. Outdoor Lighting Fixture Schedule to define the project's luminaires.

[1] *FOOTNOTES: % of Existing Luminaires Being Altered = (Sum Total of Luminaires Being Added or Altered / Existing Luminaires within the Scope of the Permit Application) x 100.*

C. COMPLIANCE RESULTS

Results in this table are automatically calculated from data input and calculations in Tables F through N. Note: if any cell on this table says "COMPLIES with Exceptional Conditions" refer to Table D. Exceptional Conditions for guidance or see applicable Table referenced below.

Calculations of Total Allowed Lighting Power (Watts) 140.7 / 170.2(e)6 or 141.0(b)2L / 180.2(b)4bv												Compliance Results		
01		02		03		04		05	OR	06		07		08	09
General Hardscape Allowance 140.7(d)1 / 170.2(e)6 (See Table I)	+	Per Application 140.7(d)2 / 170.2(e)6 (See Table J)	+	Sales Frontage 140.7(d)2 (See Table K)	+	Ornamental 140.7(d)2 / 170.2(e)6 (See Table L)	+	Per Specific Area 140.7(d)2 / 170.2(e)6 (See Table M)		Existing Power Allowance 141.0(b)2L / 180.2(b)4bv (See Table N)	=	Total Allowed (Watts)	≥	Total Actual (Watts)	07 must be >= 08
0	+	---	+	---	+	---	+	108	OR	---	=	108	≥	108	COMPLIES
Shielding Compliance (See Table G for Details)															N/A
Controls Compliance (See Table H for Details)															COMPLIES

D. EXCEPTIONAL CONDITIONS

This table is auto-filled with uneditable comments because of selections made or data entered in tables throughout the form.

E. ADDITIONAL REMARKS

This table includes remarks made by the permit applicant to the Authority Having Jurisdiction.

DOCUMENTATION AUTHOR'S DECLARATION STATEMENT

I certify that this Certificate of Compliance documentation is accurate and complete.

Documentation Author Name:	Documentation Author Signature:
Company: Perfect Design & Management	Signature Date:
Address: 2416 W. VALLEY BLVD.	CEA/ HERS Certification Identification (if applicable):
City/State/Zip: ALHAMBRA CA 91803	Phone: (626)289-8808

RESPONSIBLE PERSON'S DECLARATION STATEMENT

I certify the following under penalty of perjury, under the laws of the State of California:

1. The information provided on this Certificate of Compliance is true and correct.
2. I am eligible under Division 3 of the Business and Professions Code to accept responsibility for the building design or system design identified on this Certificate of Compliance (responsible designer).
3. The energy features and performance specifications, materials, components, and manufactured devices for the building design or system design identified on this Certificate of Compliance conform to the requirements of Title 24, Part 1 and Part 6 of the California Code of Regulations.
4. The building design features or system design features identified on this Certificate of Compliance are consistent with the information provided on other applicable compliance documents, worksheets, calculations, plans and specifications submitted to the enforcement agency for approval with this building permit application.
5. I will ensure that a completed signed copy of this Certificate of Compliance shall be made available with the building permit(s) issued for the building, and made available to the enforcement agency for all applicable inspections. I understand that a completed signed copy of this Certificate of Compliance is required to be included with the documentation the builder provides to the building owner at occupancy.

Responsible Designer Name: PETER ZHONG	Responsible Designer Signature:
Company: Perfect Design & Management	Date Signed: 2023-06-18
Address: 2416 W. VALLEY BLVD	License: E-21737
City/State/Zip: ALHAMBRA CA 91803	Phone: 6262898808

REGISTERED PROFESSIONAL ENGINEER PETER SHENG ZHONG No. E-21737 EXP. 08-31-25 ELECTRICAL STATE OF CALIFORNIA

F. OUTDOOR LIGHTING FIXTURE SCHEDULE

For new or altered lighting systems demonstrating compliance with 140.7 / 170.2(e)6 all new luminaires being installed and any existing luminaires remaining or being moved within the spaces covered by the permit application are included in the Table below. For altered lighting systems using the Existing Power method per 141.0(b)2I, only new luminaires being installed and replacement luminaires being installed as part of the project scope are included (ie, existing luminaires remaining or existing luminaires being moved are not included). Outdoor lighting attached to multifamily buildings and controlled from the inside of a dwelling unit are included in Table H. and are not included here. All other multifamily outdoor lighting is included here.

Designed Wattage:

01	02		03	04	05	06	07	08	09	10	
Name or Item Tag	Complete Luminaire Description		Watts per luminaire[1,2]	How is Wattage determined	Total Number Luminaires[2]	Luminaire Status[3]	Excluded per 140.7(a) / 170.2(e)6A	Design Watts	Cutoff Req. > 6,200 initial lumen output 130.2(b) / 160.5(c)[4]	Field Inspector	
										Pass	Fail
A	LED DOWN LT	☐ Linear	14	Mfr. Spec	3	New	☐	42	NA: < 6200 lumens	☐	☐
B	LED WALL LT	☐ Linear	22	Mfr. Spec	3	New	☐	66	NA: < 6200 lumens	☐	☐
							Total Design Watts:	108			

* NOTES: Selections with a * require a note in the space below explaining how compliance is achieved.
EX: Luminaire is lighting a statue; EXCEPTION 2 to 130.2(b)

[1] *FOOTNOTES: Authority Having Jurisdiction may ask for Luminaire cut sheets to confirm wattage used for compliance per 130.0(c) / 160.5(b)*
[2] *For linear luminaires, wattage should be indicated as W/lf instead of Watts/luminaire. Total linear feet should be indicated in column 05 instead of number of luminaires.*
[3] *Select "New" for new luminaires in a new outdoor lighting project, or for added luminaires in an alteration. Select "Altered" for replacement luminaires in an alteration. Select "Existing to Remain" for existing luminaires within the project scope that are not being altered and are remaining. Select "Existing Reinstalled" for existing luminaires which are being removed and reinstalled as part of the project scope.*
[4] *Compliance with mandatory shielding requirements is required for luminaires with initial lumen output >= 6,200 unless exempted by 130.2(b)/ 160.5(c)*

G. SHIELDING REQUIREMENTS (BUG)

This section does not apply to this project.

H. OUTDOOR LIGHTING CONTROLS

This table demonstrates compliance with controls requirements for all new or altered luminaires installed as part of the permit application. For alteration projects, luminaires which are existing to remain (ie untouched) and luminaires which are removed and reinstalled (wiring only) do not need to be included in this table even if they are within the spaces covered by the permit application.
Outdoor lighting for nonresidential buildings, parking garages and common service areas in multifamily buildings must be documented separately from outdoor lighting attached to multifamily buildings and controlled from the inside of a dwelling unit

Mandatory Controls for Nonresidential Occupancies, Parking Garages & Common Areas in Multifamily Buildings

01	02	03	04	05	
Area Description	Shut-Off 130.2(c)1 / 160.5(c)	Auto-Schedule 130.2(c)2 / 160.5(c)	Motion Sensor 130.2(c)3 / 160.5(c)	Field Inspector	
				Pass	Fail
LED WALL LIGHT	Photocontrol	Provided	NA: Not permitted by H&LS	☐	☐
LED DOWN LT	Photocontrol	Provided	NA: Each Luminaire < 40 Watts	☐	☐

[1] *FOOTNOTE: Text has been abbreviated, please refer to Table 160.5-A to confirm compliance with the specific light source technologies listed.*
[2] *Authority having jurisdiction may ask for cutsheets or other documentation to confirm compliance of light source.*
[3] *Recessed luminaires marked for use in fire-rated installations, and recessed luminaires installed in non-insulated ceilings are excepted from ii and iii.*

I. LIGHTING POWER ALLOWANCE (per 140.7 / 170.2(e))

This table includes areas using allowance calculations per 140.7 / 170.2(e). General Hardscape Allowance is per Table 140.7-A/Table 170.2-R while "Use it or lose it" Allowances are per Table 140.7-B /Table 170.2-S. Indicate which allowances are being used to expand sections for user input. Luminaires that qualify for one of the "Use it or lose it" allowances shall not qualify for another "Use it or lose it" allowance. Outdoor lighting attached to multifamily buildings and controlled from the inside of a dwelling unit are included in Table H. and are not included here. All other multifamily outdoor lighting is included here.	01				
	"Use it or lose it" Allowance (select all that apply) (select all that apply)				
☐ General Hardscape Allowance Table I (below)	☐ Per Application Table J	☐ Sales Frontage Table K	☐ Ornamental Table L	☒ Per Specific Area Table M

J. LIGHTING ALLOWANCE: PER APPLICATION

This section does not apply to this project.

K. LIGHTING ALLOWANCE: SALES FRONTAGE

This section does not apply to this project.

L. LIGHTING ALLOWANCE: ORNAMENTAL

This section does not apply to this project.

M. LIGHTING ALLOWANCE: PER SPECIFIC AREA

This table includes areas using the wattage allowance per specific area from Table 140.7-B /Table 170.2-S. More than one specific area allowance may be taken in a single project, if applicable. However, multiple specific area allowances may not be taken for the exact same area on the site.

01	02	03	04	05	06	07	08	09	10
		CALCULATED ALLOWANCE (Watts)			DESIGN WATTS				
Area Description	Specific Area Type per Table 140.7-B	Specific Area (ft^2)[1]	Allowed Density (W/ft^2)	Extra Allowance (Watts)	Luminaire Name or Item Tag	Watts per Luminaire	# of Luminaires	Design Watts	Additional Allowance (Watts)
BLDG FACADE	BuildingFacade	840	0.2	142.8	A	14	3	42	108
					B	22	3	66	
					Total Design Watts for this Area:			108	
					Total Allowance (Watts) All Areas:				108

[1] *FOOTNOTES: See Table 140.7-B /Table 170.2-S for rules for calculating the specific areas (ft^2 for these additional lighting allowances.*
[2] *For luminaires indicated in Table F as linear, wattage in column 07 is W/lf instead of Watts/luminaire. Total linear feet should be indicated in column 08 instead of number of luminaires.*

N. EXISTING CONDITIONS POWER ALLOWANCE (alterations only)

This section does not apply to this project.

O. DECLARATION OF REQUIRED CERTIFICATES OF INSTALLATION

Form/Title
NRCI-LTO-E - Must be submitted for all buildings

P. DECLARATION OF REQUIRED CERTIFICATES OF ACCEPTANCE

Form/Title	Systems/Spaces To Be Field Verified
NRCA-LTO-02-A - Must be submitted for all outdoor lighting controls except for alterations where controls are added to <= 20 luminaires.	LED WALL LIGHT; LED DOWN LT;

REGISTERED PROFESSIONAL ENGINEER PETER SHENG ZHONG No. E-21737 EXP. 08-31-25 ELECTRICAL STATE OF CALIFORNIA

REVISIONS	BY

PERFECT DESIGN & INVESTMENT, INC.
Design & Consulting
Air-Conditioning, Plumbing, Fire Sprinkler System, Electrical, Title 24 Energy Calculation.
2416 W. Valley Blvd. Tel: (626) 289-8808
Alhambra, CA 91803 Fax: (626) 289-4913
E-Mail:PERFECTAAA@aol.com
E-Mail:perfectaaa2@gmail.com

CABANA
2 PORTUGUESE BEND RD.
ROLLING HILLS, CA 90274

Date 06-16-23
Scale
Drawn E.C.
Job # Q23-385
Sheet **E-6**
Of Sheets

Attachment F

PLUMBING NOTES

GENERAL NOTES:

1. MAKE ALL UTILITY CONNECTIONS AS SHOWN ON THE DRAWINGS. ALL WORK SHALL BE DONE IN ACCORDANCE WITH LOCAL & STATE CODES. THE PLUMBING CONTRACTOR SHALL VERIFY THE EXACT LOCATION, DEPTH AND ADEQUACY OF ALL SERVICES BEFORE STARTING AND SHALL NOTIFY THE GENERAL CONTRACTOR IF SAID CONNECTION ARE NOT IN THE LOCATION SHOWN OR ARE NOT OF SUFFICIENT SIZE OR DEPTH TO MAKE THIS CONNECTION IN COMPLIANCE WITH THIS PLAN.
2. OBTAIN AND PAY FOR ALL NECESSARY CONSTRUCTION PERMITS AND INSPECTION. ARRANGE WITH UTILITY COMPANIES TO CONNECT ALL UTILITY TO SITE.
3. COORDINATE PLUMBING WORK AND PIPING SYSTEM SHUTDOWNS WITH THE OWNER. NOTIFY THE OWNER OF PLANNED SHUTDOWNS A MINIMUM OF TWO (2) DAYS PRIOR TO COMMENCEMENT OF THE WORK, INCLUDING INFORMATION ON TYPE OF SERVICE, PLANNED TIME AND ANTICIPATED LENGTH OF OUTAGE.
4. CONTRACTOR SHALL VERIFY DEPTH, SIZE, LOCATION OF ALL EXISTING UTILITIES IN FIELD BEFORE STARTING WORK.
5. CONTRACTOR SHALL COORDINATE INSTALLATION OF PLUMBING WORK WITH ALL OTHER TRADES SO AS TO AVOID UNNECESSARY DELAYS OR INTERFERENCES.
6. ALL PLUMBING WORK AND MATERIALS SHALL BE INSTALLED IN ACCORDANCE WITH ALL APPLICABLE COORDINANCES AND REGULATIONS HAVING JURISDICTION. CONTRACTOR SHALL OBTAIN ALL APPROVALS REQUIRED FROM REGULATING AGENCIES BEFORE STARTING WORK.
7. SOIL AND WASTE PIPE SHALL SLOPE AT 2%MINIMUM UNLESS OTHERWISE NOTED.
8. ALL PLUMBING WORK AND MATERIALS SHALL MEET THE REQUIREMENTS OF THE LATEST EDITIONS OF THE CALIF. PLUMBING CODE, UNLESS OTHERWISE REQUIRED BY THE DEPT. OF BLDG. & SAFETY.
9. CONTRACTOR SHALL FURNISH AND INSTALL ALL BACKFLOW PROTECTION DEVICES REQUIRED BY AGENCIES HAVING JURISDICTION.
10. PLUMBING CONTRACTOR: CONDENSATE DRAIN FROM A/C UNITS TO APPROVED DRAIN POINT, COLD WATER MAKE-UP TO MECHANICAL EQUIPMENT, GAS PIPING TO UNITS AND FINAL CONNECTIONS.
11. OBTAIN AND PAY FOR ALL PERMITS, FEES, AND INSPECTIONS REQUIRED BY GOVERNING AUTHORITIES.
12. CONDENSATE DRAINS THAT TERMINATE @TAILPIECE OF LAVATORY, TAILPIECE SHALL BE INCREASED TO 1-1/2" TO RECEIVE DISPOSAL TYPE TEE 1-1/2" X 1-1/2" X 1-1/2", EXPOSED TEES & PIPING TO BE CHROMEPLATED.
13. ALL REQUIRED CLEANOUTS SHALL BE INSTALLED AS PER CPC 2700
14. GUARANTEE: REPAIR OR REPLACE WITHOUT CHARGE ALL MATERIAL AND EQUIPMENT WHICH FAILS TO PERFORM IN A NORMAL, PROPER OR SPECIFIC MANNER FOR A PERIOD OF ONE YEAR AFTER FINAL ACCEPTANCE OF THE WORK. REPAIR OR REPLACE ALL MATERIAL AND EQUIPMENT DAMAGED BY LEAKS.
15. EXTREME CARE SHALL BE EXERCISED TO INSURE PROTECTION OF EXISTING PIPING, EQUIPMENT AND THE PREMISES FROM DAMAGE. ALL DISCONNECTED PIPING SHALL BE SUITABLY CAPPED, PLUGGED AND PROTECTED UNTIL NEW CONNECTIONS ARE MADE. THE CONTRACTOR SHALL ASSUME COMPLETE RESPONSIBILITY FOR ANY AND ALL DAMAGE RESULTING FROM HIS MODIFICATION WORK. THE CONTRACTOR SHALL EXERCISE CARE TO PREVENT THE GENERATION OF UNNECESSARY NOISE DURING THE WORK AND SHALL KEEP NOISE LEVELS TO THE MINIMUM POSSIBLE.
16. DEMOLITION AND WORK IN EXISTING AREAS: REMOVE OR RELOCATE EXISTING EQUIPMENT AND MATERIALS AS REQUIRED. HOWEVER, PHASE WORK SO THAT SERVICES WILL NOT BE DISTURBED TO OCCUPIED AREAS. DO WORK IN A MANNER WHICH WILL NOT CAUSE UNNECESSARY IN CONVENIENCE OR DANGER TO THE OCCUPANTS OF THE BUILDING, NOR INTERFERE WITH THE OTHER OCCUPANTS' ACTIVITIES. MAKE ALL NECESSARY ALTERATIONS AND ADDITIONS TO CONNECT THE EXISTING WITH THE NEW WORK SO THAT WHEN THE WORK IS COMPLETE, IT WILL BE IN SATISFACTORY OPERABLE CONDITION.
17. UNIONS, FLANGES AND GASKETS: INSTALL ON PIPING CONNECTIONS TO ALL EQUIPMENT AND ALSO ON THE DOWNSTREAM SIDE OF ALL SHUTOFF VALVES AND ELSEWHERE AS INDICATED ON DRAWINGS. DO NOT INSTALL IN INACCESSIBLE LOCATIONS.
18. CUTTING AND PATCHING: PROVIDE ALL REQUIRED CUTTING,CORE DRILLING AND ASSOCIATED PATCHING BY ACCREDITED JOURNEYMEN OF THE RESPECTIVE TRADES PER ARCHITECT'S REQUIREMENTS. DO NOT CUT OR DRILL EXISTING STRUCTURAL MEMBERS WITHOUT WRITTEN APPROVAL OF ARCHITECT. FILL ALL OPENINGS PROVIDED FOR WORK UNDER THIS SECTION IN A MANNER TO MAINTAIN THE FIRE RATING INTEGRITY OF THE FLOOR OR WALL.
19. EXCAVATION, BACKFILLING: PROVIDE EXCAVATION, BACKFILLING AND PUMPING REQUIRED FOR WORK UNDER THIS SECTION. REMOVE SURPLUS MATERIALS AS DIRECTED. WHERE TRENCHES ARE REQUIRED THROUGH EXISTING PAVING, RESURFACE AFTER INSTALLATION TO MATCH EXISTING. PROVIDE MINIMUM COVER OF 30" OVER BURIED PIPING.
20. THESE PLANS INDICATE APPROXIMATE DIMENSION ONLY FOR EQUIPMENT.EXACT DIMENSIONS MUST BE OBTAINED FROM THE EQUIPMENT MANUFACTURER.
21. THE PIPING SHOWN ON PLANS IS SCHEMATIC ONLY.INSTALL PIPING TO SUIT THE STRUCTURAL CONDITIONS.PROVIDE ALL NECESSARY OFFSETS AS REQUIRED.VERIFY WITH ARCHITECTURAL, STRUCTURAL, ELECTRICAL AND MECHANICAL DRAWINGS.
22. CONTRACTOR SHALL PROVIDE ALL STOPS,COCKS,VALVES,UNDIRECT WASTE LINES, ACCESS PANELS,ETC. TO ASSURE AN APPROVED ACCEPTABLE PLUMBING SYSTEM. PROVIDE AND INSTALL NEW TEES, WYES OR ELLS AT EACH GAS, WATER OR SEWER POINT OF CONNECTION.
23. ALL PLUMBING VENTS THROUGH ROOF SHALL TERMINATE NOT LESS THAN TEN (10) FEET FROM OR THREE (3) FEET ABOVE ANY FRESH AIR INTAKE.
24. HOSE BIBBS SHALL BE PROTECTED BY THE APPROVED VACUUM BREAKERS OR NONREMOVABLE TYPE BACKFLOW PREVENTION DEVICES & INSTALLED +12" ABOVE FINISHED FLOOR OR FINISHED GRADE.
25. SHOWERS SHALL BE FINISHED 70" ABOVE DRAIN WITH SURFACE MATERIALS NOT ADVERSELY AFFECTED BY MOISTURE.
26. INDIVIDUAL SHUT-OFF VALVES SHALL BE PROVIDED AT EACH FIXTURE FOR EACH UNIT.
27. INSULATE HW RUN-OUTS TO LAVATORIES SPECIFICALLY UNDER LAVATORIES EXPOSED PIPING. SPACE UNDER LAVATORIES SHALL BE FREE OF SHARP OBJECTS TO PREVENT INJURY TO HANDICAPPED.
28. EACH HOT WATER HEATER SHALL HAVE A SHUT-OFF VALVE AND FLEXIBLE WATER CONNECTORS AT BOTH INLET & OUTLET CONNECTIONS.
29. ALL COMBUSTION AIR INTAKE SHALL BE WITH 1/2" MESH SCREEN & RAIN CAP.
30. SEAL ALL OPENINGS AROUND PIPES PENETRATING THE FIRE RATED WALLS WITH APPROVED FIRE RETARDING MATERIALS.
31. GAS APPLIANCES TO HAVE INTERMITTENT IGNITION DEVICES.
32. INSTALL GAS VALVES AND FLEXIBLE CONNECTORS AT EACH GAS APPLIANCE PER CODE.
33. NATURAL GAS PIPING SHALL NOT BE RUN UNDERGROUND, BENEATH THE AUTO BREEZEWAY.
34. PROVIDE ADDITIONAL METAL PIPE WHEN ABS PIPING THRU 1 HOUR WALL.
35. PROVIDE ACCESS PANEL (MINIMUM 12" X 12") OR UTILITY SPACE FOR ALL PLUMBING CONCEALED VALVES, EQUIPMENT, SLIP-JOINT CONNECTIONS AND AS REQUIRED BY CODE FOR SERVICE AND MAINTENANCE.
36. IRRIGATION OF LANDSCAPE TO BE CONDUCTED AT NIGHT AND CONTROLLED FROM TIME SWITCH.
37. ALL THREADED WATER OUTLETS SHALL HAVE AN APPROVED VACUUM BREAKER PROPERLY INSTALLED.
38. ALL BEVERAGE DISPENSING COLD WATER PLUMBING LINES AND ICE MACHINE COLD WATER PLUMBING LINES MUST BE CONNECTED THROUGH A DOUBLE CHECK VALVE.
39. CONTRACTOR TO LABEL ALL FIXTURE UNITS THAT REQUIRE A BACKFLOW PREVENTION DEVICE BY LOCAL CODE.
40. ALL PLUMBING WASTE & GAS VENTS ARE TO BE KEPT 5' FROM PROPERTY LINE, & POINT OF ROOF PENETRATIONS.
41. PLUMBING FIXTURES SHALL BE AMERICAN STANDARD, KOHLER, OR EQUAL.
42. ALL A/C CONDENSATE LINE TO BE INSTALLED BY PLUMBING CONTRACTOR. REFER TO MECHANICAL DRAWINGS FOR LOCATION OF CONDENSATE.
43. INSTALL EXPANSION JOINTS IN THE VENT, WASTE,SOIL PIPING,AND EXPANSION LOOPS IN THE WATER AND GAS PIPING AS REQUIRED BY THE LOCAL ADMINISTRATIVE AUTHORITY.
44. CONNECTIONS BETWEEN TWO DISSIMILAR METAL PIPES SHALL BE MADE OF WITH DIELECTRIC UNIONS.
45. ALL PIPING IN FINISHED AREAS SHALL BE CONCEALED WHERE POSSIBLE, AND ALL EXPOSED PIPING SHALL BE RUN HIGH AS POSSIBLE AND TIGHT TO WALLS.
46. SPECIFICATIONS GOVERN WHERE THEY EXCEED CODE OR PLAN REQUIREMENTS VERIFY WITH ENGINEER WHEN IN DOUBT.
47. BACK WATER VALVES WILL BE REQUIRED IF PROJECT IS LOWER THAN THE UP STREAM MANHOLE.
48. ALL PIPING PASSING THROUGH OR UNDER CINDERS OR WALLS SHALL BE DONE IN ACCORDANCE WITH THE PROVISIONS OF CPC 2700
49. NO PIPING SHALL BE DIRECTLY EMBEDDED IN CONCRETE OR MASONRY WALLS OR FOOTINGS.
50. ALL TRENCHES DEEPER THAN THE FOOTINGS AND PARALLELING THE SAME MUST BE AT LEAST FORTY-FIVE (45) DEGREES THEREFROM. ALL LINES TO BE LOCATED AWAY FROM BEARING FOOTINGS, OR AS DIRECTED BY STRUCTURAL ENGINEER.
51. ALL COPPER PIPING JOINTS UNDER A CONCRETE SLAB SHALL BE BRAZED PER THE REQUIREMENTS OF CPC 2700
52. LAVATORY FIXTURES AND ACCESSORIES SHALL BE LOCATED WITH AT LEAST ONE OF EACH TYPE HAVING ALL OPERABLE PARTS WITHIN 40 INCHES OF THE FLOOR. TITLE 24, SECTION 2-511(b)2.
53. PROVIDE A REDUCED PRESSURE PRINCIPLE BACKFLOW DEVICE ON THE DOMESTIC AND IRRIGATION SERVICE LINES. THE DEVICES MUST BE INSTALLED A MINIMUM OF 12" ABOVE GRADE. TITLE 14, SECTION 7603 (c).
54. ALL PIPES RUNNING THRU FOUNDATION WALLS TO BE SLEEVED AND WATER TIGHT, CAULK AS REQUIRED.
55. EQUIPMENT BY OTHERS: FOR ROUGH-INS AND FINAL CONNECTIONS TO EQUIPMENT FURNISHED BY OTHERS, ASCERTAIN EXACT SIZES, SERVICES AND LOCATIONS, BEFORE STARTING WORK. VERIFY ACCURACY OF WORK SHOWN ON THE DRAWINGS BEFORE STARTING WORK. CONTRACTOR RESPONSIBLE FOR PROVIDING PROPER INSTALLATION.

DF3D

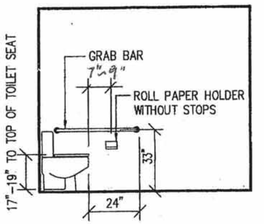

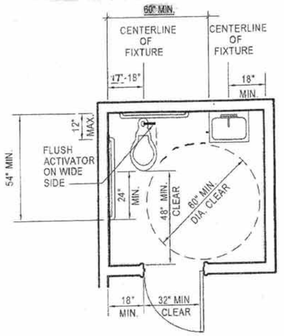

PLUMBING LEGEND

SYMBOL	ABBREV	DESCRIPTION
	S OR W	SOIL OR WASTE PIPING
	V	VENT PIPING
	CW	COLD WATER PIPING
	HW	HOT WATER PIPING
	HWR	HOT WATER RETURN PIPING
G	G	FUEL GAS PIPING)LOW PRESS.)
CD	CD	A/C CONDENSATE SRAIN PIPING
F	F	FIRE PROTECTION WATER PIPING
SSD	SSD	SUBSURFACE DRAINAGE PIPING
DS	DS	DOWNSPOUT PIPING
SD	SD	STORM OR RAIN WATER DRAIN PIPING
(CW)	(CW)	CITY WATER PIPING
(S)	(S)	CITY SEWER PIPING
(G)	(G)	CITY GAS PIPING (LOW PRESS.)
(SD)	(SD)	CITY STORM DRAIN
(E)	(E)	EXISTING
(N)	(N)	NEW
(F)	(F)	FUTURE
UTR	UTR	UP THRU ROOF
VTR	VTR	VENT THRU ROOF
I.E.	I.E.	INVERSE ELEVATION
H.B.	H.B.	HOSE BIBB
F.H.	F.H.	FIRE HYDRANT
M.H.	M.H.	MANHOLE
Y.B.	Y.B.	YARD BOX
WM	WM	WATER METER
GM	GM	GAS METER
COP	COP	CAP ON END OF PIPE
CO	CO	CLEAN OUT
FCO	FCO	FLOOR CLEAN-OUT
WCO	WCO	WALL CLEAN-OUT
COTG	COTG	CLEAN-OUT TO GRADE
RD	RD	ROOF DRAIN
OD	OD	OVERFLOW DRAIN
AD	AD	AREA DRAIN
TD	TD	TRENCH DRAIN
ED	ED	EMERGENCY DRAIN
G.C.	G.C.	GAS COCK
G.V.	G.V.	GATE VALVE
B.V.	B.V.	BACKWATER VALVE
P.T.R.	P.T.R.	PRESS.-TEMP. RELIEF VALVE
P.R.V.	P.R.V.	PRESSURE REDUCING VALVE
C.V.	C.V.	CHECK VALVE
A.P.	A.P.	ACCESS PANEL
S.H.	S.H.	SPRINKLER HEAD
ABV	ABV	ABOVE
FR	FR	FROM
BEL	BEL	BELOW
DN	DN	DOWN
CLG	CLG	CEILING
FL	FL	FLOOR
GR	GR	GRADE
B.G.	B.G.	BELOW GRADE
B.F.	B.F.	BELOW FLOOR
O.H.	O.H.	OVER HEAD (ABOVE CLG)
P.O.C.	P.O.C.	POINT OF CONNECTION
A.P.	A.P.	ACCESS PANEL

PLMLGND

56. PROVIDE PIPE ISOLATOR AT ALL HANGERS.
57. USE OF MAKESHIFT DEVICES SUCH AS WIRE, ROPE, WOOD, TAPE, ETC., IS PROHIBITED FOR ANCHORING OR FASTENING PIPES.
58. UNIONS, FLANGES AND GASKETS: INSTALL ON PIPING CONNECTIONS TO ALL EQUIPMENT AND ALSO ON THE DOWNSTREAM SIDE OF ALL SHUTOFF VALVES AND ELSEWHERE AS INDICATED ON DRAWINGS. DO NOT INSTALL IN INACCESSIBLE LOCATIONS.
59. CUTTING AND PATCHING: PROVIDE ALL REQUIRED CUTTING,CORE DRILLING AND ASSOCIATED PATCHING BY ACCREDITED JOURNEYMEN OF THE RESPECTIVE TRADES PER ARCHITECT'S REQUIREMENTS. DO NOT CUT OR DRILL EXISTING STRUCTURAL MEMBERS WITHOUT WRITTEN APPROVAL OF ARCHITECT. FILL ALL OPENINGS PROVIDED FOR WORK UNDER THIS SECTION IN A MANNER TO MAINTAIN THE FIRE RATING INTEGRITY OF THE FLOOR OR WALL.

GENERAL SEISMIC NOTES:

1. CONTRACTOR TO PROVIDE COMPLETE SEISMIC ANCHORAGE AND BRACING FOR ALL EQUIPMENT AND REQUIRED PIPING.
2. PRIOR TO EQUIPMENT INSTALLATION, SUBMIT COMPLETE SEISMIC ANCHORAGE AND BRACING CALCULATIONS AND DETAILS SHOWING EQUIPMENT WEIGHTS AND CENTERS OF GRAVITY, LOCATION, QUANTITIES, SIZES AND METHOD OF ANCHORAGE AND COMBINED SHEAR AND TENSION BASED ON CALIF. BUILDING CODE, USING THE FOLLOWING CRITERIA:
   A. FIXED EQUIPMENT ON GRADE : 50% OF OPERATING WEIGHT.
   B. FIXED EQUIPMENT ON STRUCTURE : 75% OF OPERATING WEIGHT.
   C. FLEXIBLY MOUNTED EQUIPMENT : 4 TIMES THE ABOVE VALUES.
   D. SIMULTANEOUS VERTICAL FORCE : 1/3 X THE HORIZONTAL FORCE.

   REFER TO CALIF. BUILDING CODE, CBC 1617.11.1 FOR APPLICABLE FORCE FACTOR"Cp". CONSIDER THE AFFECT OF TEMPERATURE CHANGE IN PREPARATION OF ANCHORAGE AND BRACING DETAILS.

   THE INSTALLATION SHALL BE SUBJECT TO THE APPROVAL OF THE ARCHITECT AND MECHANICAL ENGINEER.
3. THE SEISMIC BRACING AND ANCHORAGE OF ALL PIPING SHALL CONFORM TO THE "GUIDELINES FOR SEISMIC RESTRAINTS OF MECHANICAL SYSTEMS AND PLUMBING PIPING SYSTEMS"PUBLISHED BY SMACNA AND APPROVED BY THE OFFICE OF THE STATE ARCHITECT, STRUCTURAL SAFETY DIVISION. (APPROVAL NO. R-0010).

   INSTALLATION OF THE SEISMIC BRACING AND ANCHORAGE OF ALL PIPING IS SUBJECT TO THE APPROVAL OF THE ARCHITECT AND THE MECHANICAL ENGINEER.
4. ALL CONCRETE EXPANSION TYPE ANCHOR BOLTS SHALL BE PHILLIPS RED-HEAD WEDGE OR HILTKWIK BOLT TYPE (LOADED IN EITHER PULLOUT OR SHEAR) AND SHALL HAVE 50 PERCENT OF THE BOLTS (ALTERNATE BOLTS IN ANY GROUP ARRANGEMENT) PROOF TESTED IN TENSION AND CERTIFIED BY A RECOGNIZED TESTING AGENCY AT THE VALUES INDICATED IN THE FOLLOWING TABLE. IF THERE ARE ANY FAILURES, THE IMMEDIATELY ADJACENT BOLTS MUST THEN ALSO BE TESTED. ANCHOR CAPACITIES SHALL NOT EXCEED 80% OF THE VALUES GIVEN IN THE PUBLISHED EVALUATION REPORTS. THE VALUES SHOWN IN THE TABLE BELOW ARE REDUCED 80%.

   ALLOWABLE LOADS FOR ANCHORS SUBJECTED ON COMBINED SHEAR AND TENSION FORCES SHALL BE DETERMINED BY THE RATIO OF THE ACTUAL SHEAR TO THE ALLOWABLE SHEAR PLUS THE RATIO OF THE ACTUAL TENSION TO THE ALLOWABLE TENSION NOT EXCEEDING 1.00. ANCHORS SHALL NOT BE SUBJECT TO VIBRATORY SHOCK LOADS SUCH AS SUPPORTS FOR RECIPROCATING ENGINES UNLESS THEIR ADEQUACY IS DETERMINED BY TESTS AND APPROVED BY CERTIFIED TESTS AND APPROVED BY THE ARCHITECT AND MECHANICAL ENGINEER.

ANCHOR BOLT DIAMETER (1)	3/8"		1/2"		5/8"		3/4"	
CONCRETE TYPE	HR	LR	HR	LR	HR	LR	HR	LR
ANCHOR CAPACITY:(2) TENSION	440	210	700	420	1150	640	1610	900
SHEAR	780	800	1060	800	2180	1850	2900	2500
TYPE OF TEST: DIRECT PULL TENSION	1100	525	1750	1050	2875	1600	4025	2250
MINIMUM EMBEDMENT	2-1/4"		3"		3-3/4"		4-1/2"	

(1) ALL ANCHORS TO BE INSTALLED WITH SPECIAL INSPECTION.

(2) THE TABULATED VALUES ARE FOR ANCHORS INSTALLED A MINIMUM OF TWELVE (12) BOLT DIAMETERS ON CENTER AND A MINIMUM EDGE DISTANCE OF TEN (10) BOLT DIAMETERS FOR 100 PERCENT ANCHOR EFFICIENCY. SPACING AND EDGE DISTANCE MAY BE REDUCED TO SIX (6) BOLT DIAMETERS AND FIVE (5) BOLT DIAMETERS PROVIDED THE VALUES ARE REDUCED FIFTY PERCENT. LINEAR INTERPOLATION MAY BE USED FOR INTERMEDIATE SPACINGS AND EDGE MARGINS.

(3) WHEN INSTALLING DRILLED-IN ANCHORS IN NON-PRESTRESSED REINFORCED CONCRETE,USE CARE AND CAUTION TO AVOID CUTTING OR DAMAGING THE REINFORCING BARS. WHEN INSTALLING FILLED-IN ANCHORS INTO PRESTRESSED CONCRETE (PRE- OR POST- TENSIONED), LOCATE TENDONS BY USING A NON-DESTRUCTIVE METHOD PRIOR TO THE INSTALLATION.EXERCISE EXTREME CARE AND CAUTION TO AVOID CUTTING OR DAMAGING THE TENDONS DURING INSTALLATION. MAINTAIN A MINIMUM CLEARANCE OF ONE-INCH BETWEEN THE REINFORCEMENT AND DRILLED-IN ANCHOR.

5. ALL PIPING CROSSING BUILDING SEISMIC SEPARATIONS SHALL BE PROVIDED WITH APPROVED FLEXIBLE CONNECTORS.

TESTING AND ADJUSTING:

1. GENERAL: ADJUST EACH PIECE OF EQUIPMENT AND ALL SYSTEMS TO INSURE PROPER FUNCTIONING OF CONTROLS AND LEFT IN FIRST CLASS OPERATING CONDITION.
2. DEFECTIVE WORK:REMOVE AND REPLACE ANY PIECE OF APPARATUS, WORK, OR MATERIAL FAILING ANY TESTS. RETEST PORTION OF WORK REPLACED BY CONTRACTOR AT HIS OWN EXPENSE.
3. NOTICE: PROVIDE 24 HOUR NOTICE THAT PIPING IS READY FOR TESTING. TEST IN ACCORDANCE WITH ALL LOCAL AND STATE ORDINANCES.
4. PROTECTION: ISOLATE ALL EQUIPMENT SUBJECT TO DAMAGE FROM TEST PRESSURE. MAKE NO TEST AGAINST A SERVICE VALVE OR METER.
5. FULL GAS TEST: TEST WITH AIR AT 200 PSI. CHECK EACH JOINT FOR LEAKS WITH SOAP SUDS.

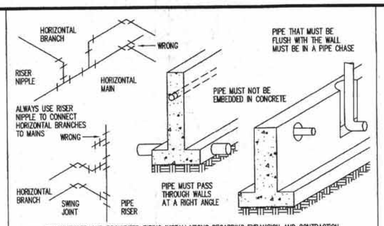

RECOMMENDED AND PROHIBITED PIPING INSTALLATIONS REGARDING EXPANSION AND CONTRACTION OF PIPING AND SETTLEMENT OF BUILDINGS.

PIPEDTL3

2 DETAIL — SCALE N.T.S

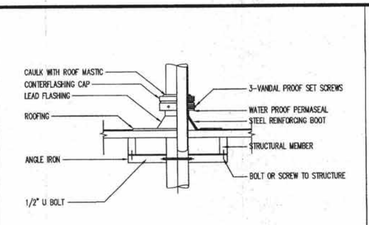

ROOFPIPE

3 PIPE THROUGH ROOF — SCALE N.T.S

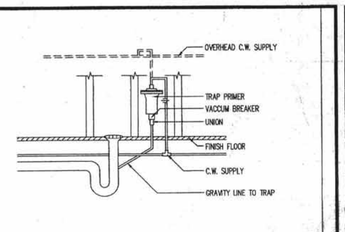

PIPEDTL1

4 DETAIL — SCALE N.T.S

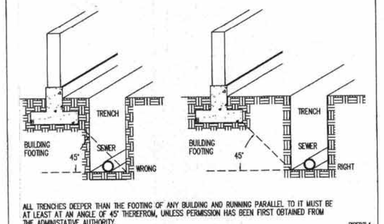

ALL TRENCHES DEEPER THAN THE FOOTING OF ANY BUILDING AND RUNNING PARALLEL TO IT MUST BE AT LEAST AT AN ANGLE OF 45° THEREFROM, UNLESS PERMISSION HAS BEEN FIRST OBTAINED FROM THE ADMINISTATIVE AUTHORITY.

PIPEDTL4

6 DETAIL — SCALE N.T.S

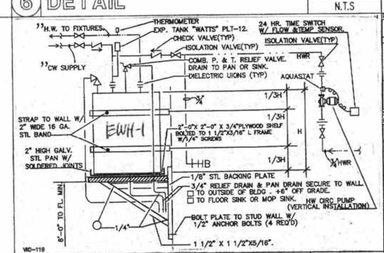

WD-119

7 WATER HEATER DETAIL — SCALE N.T.S

Performance Specifications Low-Flow Rate Modes						
Model	GPM @ Min. P.	GPM @ Max. P.	Min. Flow	Voltage	Amps	Max. Cord
S-30L	68	40	3	110	27	8
S-30L	68	40	3	208	15	12
S-30L	68	40	3	220	13	12
S-30L	66	40	3	277	11	14
S-46L	105	63	4.6	208	22	10
S-46L	105	63	4.6	220	21	10
S-46L	105	63	4.6	277	17	12

Standard Flow-Rate Modes Performance Specifications						
	All Temp Rise					
Model	GPM @ Min. P.	GPM @ Max. P.	Min. Flow	Voltage	Amps	Max. Cord
S-60	63	41	8	208	29	8
S-60	63	41	8	220	27	8
S-60	63	41	8	277	22	10
S-70	74	48	7	208	34	8
S-70	74	48	7	220	31	8
S-70	74	48	7	277	25	8
S-80	84	54	6	208	38	8
S-80	84	54	6	220	36	8
S-80	84	54	6	277	29	8
S-90	95	61	9	220	40	8
S-90	95	61	9	277	32	8

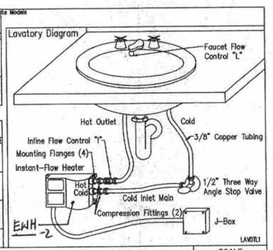

LAVDTL1

8 WATER HEATER — SCALE N.T.S

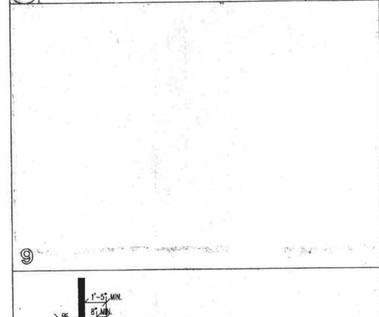

LAVDTL3

11 LAVATORIES/URINALS — SCALE N.T.S

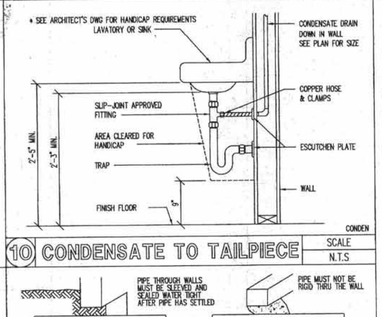

CONDEN

10 CONDENSATE TO TAILPIECE — SCALE N.T.S

PROVISION MUST BE MADE FOR SETTLEMENT OR EXPANSION AND CONTRACTING OF PIPING

PIPEDTL2

12 DETAIL — SCALE N.T.S

WATER COMPANY
PLUMBING SIZING FORM TEL. # (310) 767-8200

WATER PRESSURE: MAX: 65 PSI MIN: 60 PSI

DEVELOPED LENGTH 300 FT METER SIZE (E) 1"

If maximum water pressure is over 80 psi then a pressure reducing valve is needed.

PRV: ___ YES √ NO MAKE — MODEL —
SIZE — PRESSURE —

---------FILL IN THE INFORMATION ABOVE THIS LINE---------

AVAILABLE PRESSURE	+ :	60
RESIDUAL PRESSURE	− :	20
LOSS DUE TO ELEVATION	10 x .433 − :	4.33
LOSS THRU METER	− :	3
LOSS THRU PRV	− :	7
PRESSURE AVAILABLE FOR FRICTION LOSS:		22.67

FRICTION LOSS PER 100 FT. 22.67 X100 ÷ 300 = 10.89 PER 100FT

CW USE: 10.89 PSI/100FT FOR THIS PROJECT (8FT/SEC)

HW : 10.89 " " (5FT/SEC.)

SIZE	PIPE SIZE SCHEDULE F. TANK	F. VALVE	FIXTURE UNITS NU.	FIXTURE	UNIT	TOTAL
1/2"	3	3				
3/4"	12	8				
1"	28	16				
1 1/4"						
1 1/2"						
2"						
2 1/2"						
3"						
GPM=	9					
VIC-35	CW	HW				

PLUMBING UTILITY LOAD

GAS LOAD --- MBTUH

	EXIST	NEW	FUTURE
SPACE HEATING			
WATER HEATING			
OTHER			
TOTAL GAS DEMAND:	(MBTUH) OR		(CFH).
GAS DEV. LENGTH:	FT, GAS PRESSURE: 7-10 IN ACCORDANCE WITH ALL LOCAL AND STATE ORDINANCES.		

SEWER LOAD --- F.U.

	EXIST	NEW	FUTURE
TOTAL (F.U.):		48	

WATER DEMAND --- F.U.

	EXIST	NEW	FUTURE
DOMESTIC		10	
TOTAL WATER DEMAND:	10 (F.U.) OR	8 (GPM)	
IRRIGATION (GPM):			
WATER PRESSURE: MAX.	65 P.S.I., MIN.	60 P.S.I.	

NOTES:
1) THE HIGHEST DOMESTIC FIXTURE ABOVE WATER METER IS 10 FT
2) THE FARTHEST DOMESTIC FIXTURE FROM P.O.C. (THE COLD WATER LINE & CITY WATER MAIN) IS 300 FT

VIC-137

PIPE MATERIAL SCHEDULE

| SERVICE | INSIDE | OUTSIDE

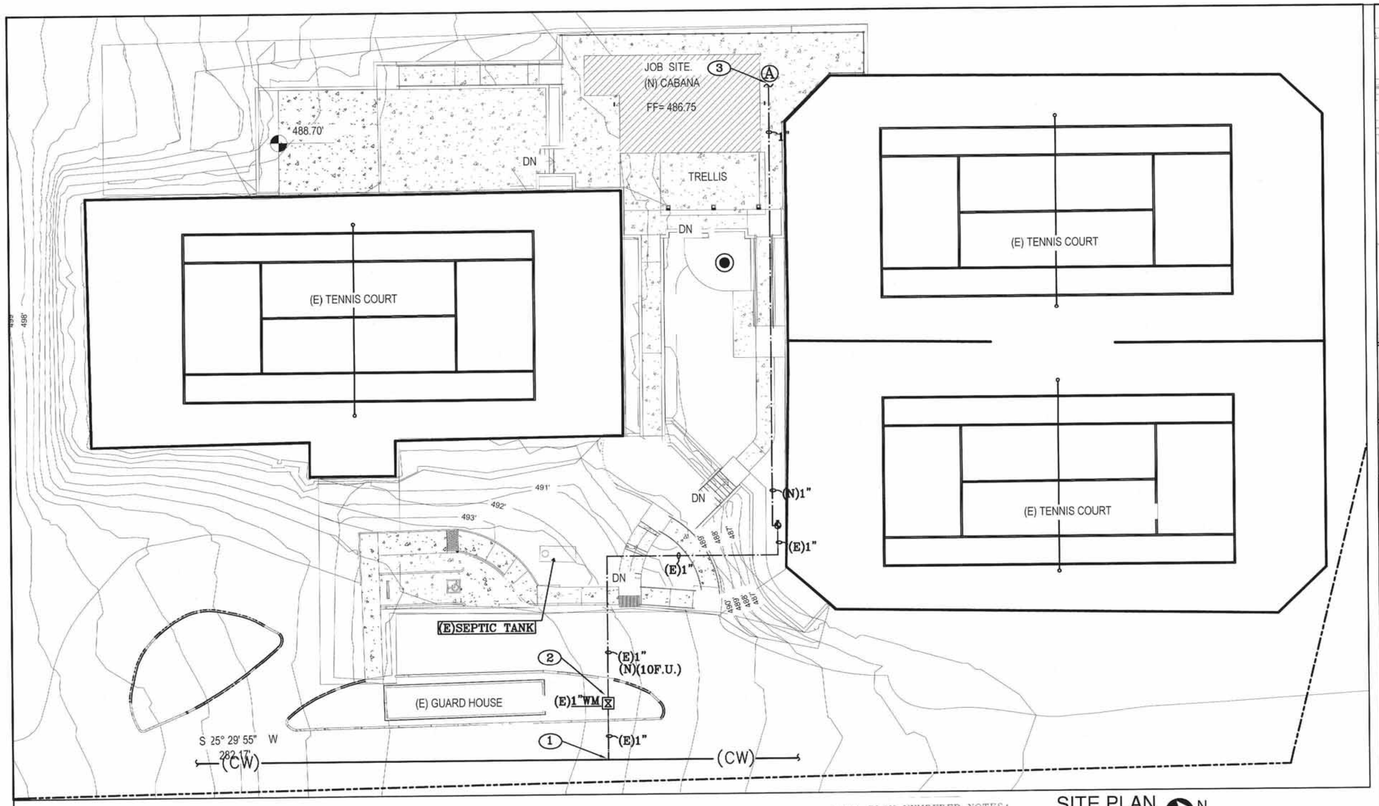

SITE PLAN N
1/16"=1'-0"

SITE PLAN NUMBERED NOTES:

1. (E) 1" CW CONNECT TO CITY WATER. PLUMBING CONTRACTOR TO VERIFY THE EXACT LOCATION OF (E) CITY WATER.
2. (E) 1" WATER METER WITH MAIN GATE VALVE IN CONC. VAULT.
3. NEW 1" CW CONNECT TO EXISTING 1" CW LINE. PLUMBING CONTRACTOR TO VERIFY THE EXACT SIZE & LOCATION OF (E) THE WATER LINE. FOR CONT. SEE (A) IN "FLOOR PLAN" ON SHEET P-3

NOTE: FOR HOT & COLD WATER PIPING SIZE SEE "HOT & COLD WATER RISER DIAGRAM" ON SHEET P-5.

NOTE: FOR WASTE & VENT PIPING SIZE SEE "WASTE & VENT PIPING RISER DIAGRAM" ON SHEET P-5.

PLUMBING FIXTURE SCHEDULE
(REFERENCE ONLY)

SYMBOL	MARK	FIXTURE (MINIMUM ROUGH-IN SIZES)	CW	HW	W	V	TRAP	DESCRIPTION
	WC	WATER CLOSET (ACCESSIBLE)	3/4"	--	4"	2"	--	A/S "CADET 3 FloWise" 2 PIECE EL "ADA" ENLONGATED 1.28 GPF TOILET 2835.128 ELONGATED ADA 16-1/2" HIGH ELONGATED. BOWL AND TANK. FLUSHES ON 1.28 GALLONS. 2 BOLT CAPS. WHITE VITREOUS CHINA. ACCESSORIES: OPEN FRONT SEAT LESS COVER.
070813								
	L	LAVATORY (ACCESSIBLE)	1/2"	1/2"	2"	1-1/2"	1-1/2"	A/S "WHEELCHAIR" 9141.011 WHITE VITREOUS CHINA. FRONT OVERFLOW CONCEALED ARM SUPPORT. FLOW:0.4 GPM FITTINGS: A/S "RELIANT" 2385.139 W/POP UP DRAIN.

NOTE: 1) PUBLIC LAVATORIES SHALL HAVE SELF-CLOSING OR METERING FAUCETS INSTALLED. SEC. 407.4

2) ALL FIXTURES SHALL COMPLY WITH FLOW REQUIREMENT OF LOCAL PLUMBING CODE.
ALL PLUMBING FIXTURES SHALL MEET OR BE LESS THAN THE FOLLOWING FLOW RATES PER CHAPTER 4 OF 2019 CPC:
NONRESIDENTIAL LAVATORY FAUCETS (METERING)= OR < 0.2 GAL/CYCLE

3) THIS LAVATORY HOT & COLD WATER SUPPLY WITH "POWERS" HYDROGUARD SERIES: LFIM495 THERMOSTATIC MIXING VALVES SET @ 110 F.)

4) INSULATION OF DOMESTIC HOT WATER PIPING SHALL BE IN ACCORDANCE WITH SECTION 609.11.1 AND SECTION 609.11.2.

FD	FLOOR DRAIN	--	--	2"	1-1/2"	2"	JOSAM 302-36AJ.6" DIAMETER (FOR RESTROOM OR KITCHEN)
TP	TRAP PRIMER						"ZURN" AUTOMATIC TRAP PRIMER Z-1022
HB*	HOSE BIBB	3/4"	--	--	--	--	"ACORN" B120-RN

* -- HOSE BIBBS SHALL BE PROTECTED FROM CROSS-CONNECTION BY A LISTED & APPROVED ATMOSPHERIC VACUUM BREAKER OR NONREMOVABLE TYPE BACKFLOW PREVENTION DEVICES INSTALLED AT LEAST 6" ABOVE THE HIGHEST POINT OF USAGE AND LOCATED ON THE DISCHARGE SIDE OF THE LAST VALVE.

KS	KITCHEN SINK (ACCESSIBLE)	1/2"	1/2"	2"	1-1/2"	1-1/2"	A/S "DOUBLE BOWL" 7044.027 ENAMELED STEEL COUNTERTOP FITTINGS: A/S "RELIANT" 4205.074. FLOW:1.8 GPM ACCESSORY: IN SINK ERATOR #77,1/2 HP GARBAGE DISPOSAL.
FS	FLOOR SINK	--	--	2"	1-1/2"	2"	JOSAM 9032. 12"X12"X6-1/4" DEPTH W/ALUM. DOME AND 1/2 GRATE
CP	CIRCULATING PUMP						B & G MODEL & SERIES # "PR" SIZE: 3/4". 1/2 GPM ALL BRONZE. MOTOR HP: 1/6 ELECTRIC: 120/1/60. 1750 RPM NOTE: EXTRA QUIET IN-LINE PUMP INTERCONNECT W/ AQUASTAT AND 7 DAY PROGRAMMABLE TIME CLOCK.
EWH-1	ELECTRIC WATER HEATER						RHEEM EGSP30 30 GAL. 3.0 KW. 120/208-1-60. SHIPPING WEIGHT:115 LBS WATER HEATER OPERATING WEIGHT(OP WT) CALCULATION: OP WT=SHIP WT + VOLUME GAL X 8.34 =115 + 30 X 8.34 = 365.2 LBS
EWH-2	ELECTRIC WATER HEATER						"REMAX" SP3208 TANKLESS ELECTRIC WATER HEATER 3.0 KW. INPUT (14.4 AMP) (EQUAL 10.236 BTUH) 48 F RISE @ .5 GPM 208/240-1-60 (WIRE SIZE 10 AWG) SHIPPING WEIGHT: 3 LBS DIMENSIONS:75" X 5.25" X 2.875" UL LISTED:ER6887:CEC APPROVED.

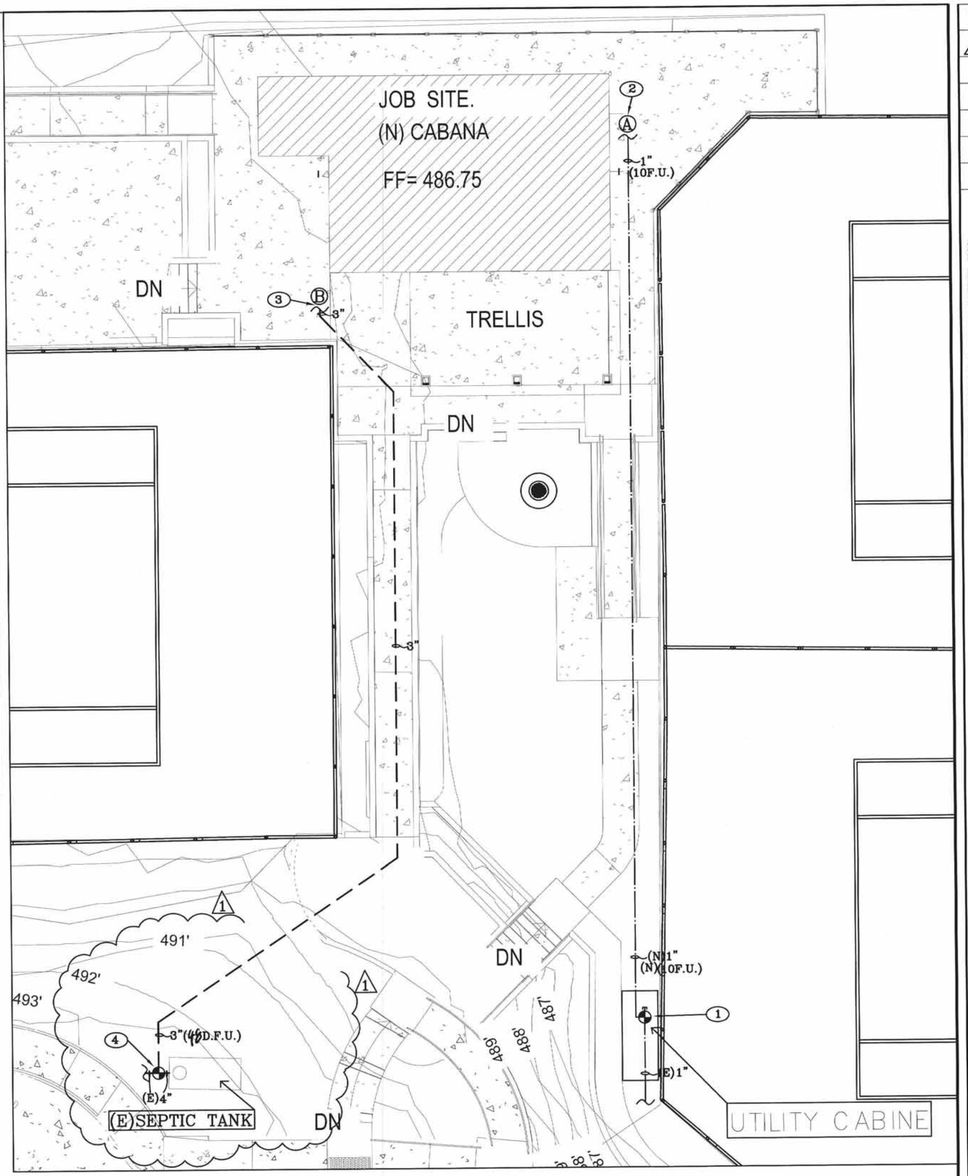

(ENLARGE) SITE PLAN N
1/8"=1'-0"

ENLARGE SITE PLAN NUMBERED NOTES:

1. NEW 1" CW CONNECT TO EXISTING 1" CW LINE. PLUMBING CONTRACTOR TO VERIFY THE EXACT SIZE & LOCATION OF (E) THE WATER LINE.
2. FOR CONT. SEE (A) IN "FLOOR PLAN" ON SHEET P-3
3. FOR CONT. SEE (B) IN "FLOOR PLAN" ON SHEET P-4
4. NEW 4" WASTE LINE CONNECT TO EXISTING 4" WASTE LINE. PLUMBING CONTRACTOR TO VERIFY THE EXACT SIZE & LOCATION OF (E) THE WASTE LINE.

NOTE: FOR HOT & COLD WATER PIPING SIZE SEE "HOT & COLD WATER RISER DIAGRAM" ON SHEET P-5.

NOTE: FOR WASTE & VENT PIPING SIZE SEE "WASTE & VENT PIPING RISER DIAGRAM" ON SHEET P-5.

REVISIONS	BY
1 08 - 27 - 23	

PREFECT DESIGN & MANAGEMENT INC.
Design & Consulting
Air-Conditioning, Plumbing, Fire Sprinkler System,
Electrical, Title 24 Energy Calculation.
2416 N. Valley Blvd. Tel: (626) 289-8808
Alhambra, CA 91803 Fax: (626) 289-4913
E-Mail:perfectcaa@gmail.com

REGISTERED PROFESSIONAL ENGINEER
RAYMOND MENG ZHONG
No. M-27808
Exp. 06-30-25
MECHANICAL
STATE OF CALIFORNIA

CABANA
2 PORTUGUESE BEND RD.
ROLLING HILLS, CA 90274

Date	08 - 27 - 23
Scale	
Drawn	K.C.
Job #	Q23-385
Sheet	P-2
Of	Sheets

ES-P-LFLM495

Product Specification

Job Name _____ Contractor _____

Job Location _____ Approval _____

Engineer _____ Contractor's P.O. No. _____

Approval _____ Representative _____

LEAD FREE*

HYDROGUARD®
Series LFLM495
Thermostatic Mixing Valves for Lavatory Installations



Advanced Thermal Activation

Features

- Temperature control to ASSE 1069, 1070 and 1017 down to 0.5 gpm
- Advanced thermal actuator improves performance at low flow
- Lead Free* cast copper silicon alloy body construction for durability and to comply with Lead Free* requirements
- Adjustable temperature selection with lock down
- Union connections for easy maintenance
- Integral checks and screen prevents cross-flow and contamination
- Available in ½", ¾", 1" (15, 20, 25 mm) with NPT, Sweat, PEX, Quick-Connect, CPVC union connections and w/press

Specifications

Temperature Adjustment: 80°- 120°F (27°C to 49°C)
Approach Temperature: 5°F (3°C) above set point
Max. Operating Pressure: 125 psi (861 kPa)
Max. Hot Water Temperature: 200°F (93°C)
Max. Pressure Differential between Hot & Cold Water Supplies: 25%
Minimum Flow: 0.5 gpm (1.90 lpm) when tested in accordance with ASSE 1017-2003
Check Valves: Integral
Construction: Lead Free* Cast copper silicon alloy body
Listing: ASSE 1069, ASSE 1070, ASSE 1017, IAPMO cUPC, and NSF372

Viega Pro-Press™ connections are optional factory installed fitting on each end of the approved/certified assembly

UNION CONNECTIONS		
Female NPT	1/2" (15)	LFLM495-1
	3/4" (20)	LFLM496-1
	1" (25)	LFLM497-1
Sweat	1/2" (15)	LFLM495-2
	3/4" (20)	LFLM496-2
	1" (25)	LFLM497-2
CPVC	1/2" (15)	LFLM495-3
	3/4" (20)	LFLM496-3
	1" (25)	LFLM497-3
PEX	1/2" (15)	LFLM495-4
	3/4" (20)	LFLM496-4
	1" (25)	LFLM497-4
Quick-Connect	1/2" (15)	LFLM495-5
	3/4" (20)	LFLM496-5
	1" (25)	LFLM497-5
w/Press	1/2" (15)	LFLM495-1 w/press
	3/4" (20)	LFLM496-1 w/press
	1" (25)	LFLM497-1 w/press

Capacity

Pressure Drop Across The Valve								
(C_v) 1 psi (7 kPa)	5 psi (34 kPa)	10 psi (69 kPa)	15 psi (103 kPa)	20 psi (138 kPa)	30 psi (207 kPa)	45 psi (310 kPa)	60 psi (414 kPa)
1.79	4.0 gpm (15.0 lpm)	5.7 gpm (22.0 lpm)	7.0 gpm (26.0 lpm)	8.0 gpm (30.0 lpm)	9.8 gpm (37.0 lpm)	12.0 gpm (45.0 lpm)	13.9 gpm (53.0 lpm)

*The wetted surface of this product contacted by consumable water contains less than 0.25% of lead by weight.

⚠ WARNING

When used in an ASSE 1017 application at the hot water source, the Powers Thermostatic Mixing Valve Series LFLM495 cannot be used by itself to control final temperature at fixtures where ASSE Standard 1016 or ASSE Standard 1070 listed devices are required. Such use may result in severe bodily injury (i.e. scalding or chilling) and/or death. ASSE Standard 1016, ASSE 1069 or ASSE Standard 1070 listed devices, such as Powers Series LFe480 or LFLM495, should be used at point-of-use to prevent possible injury. Consult all product manuals, and instruction guides before installing any referenced product.

Recirculation systems should recirculate water at temperatures over 140°F to reduce the risk of bacterial growth in the piping. This valve should not be used at the hot water source in recirculation systems.

NOTICE

The information contained herein is not intended to replace the full product installation and safety information available or the experience of a trained product installer. You are required to thoroughly read all installation instructions and product safety information before beginning the installation of this product.

Powers product specifications in U.S. customary units and metric are approximate and are provided for reference only. For precise measurements, please contact Powers Technical Service. Powers reserves the right to change or modify product design, construction, specifications, or materials without prior notice and without incurring any obligation to make such changes and modifications on Powers products previously or subsequently sold.

POWERS™
A WATTS Brand

Dimensions

MODEL CONNECTIONS	LFLM495-1 1/2" NPT FEMALE	LFLM496-1 3/4" NPT FEMALE	LFLM497-1 1" NPT FEMALE	LFLM495-2 1/2" SWEAT	LFLM496-2 3/4" SWEAT	LFLM497-2 1" SWEAT	LFLM495-3 1/2" CPVC	LFLM496-3 3/4" CPVC	LFLM497-3 1" CPVC	LFLM495-4 1/2" PEX	LFLM496-4 3/4" PEX	LFLM497-4 1" PEX
"A"	4-7/8 (124mm)	4-7/8 (124mm)	5-5/16 (135mm)	4-13/16 (123mm)	5-5/16 (135mm)	5-13/16 (148mm)	4-3/4 (121mm)	5-1/4 (133mm)	5-11/16 (144mm)	5-1/4 (133mm)	5-1/2 (140mm)	5-7/8 (149mm)
"B"	5-7/16 (137mm)	5-7/16 (137mm)	5-5/8 (143mm)	5-3/8 (137mm)	5-5/8 (143mm)	5-7/8 (149mm)	5-5/16 (136mm)	5-9/16 (142mm)	5-13/16 (147mm)	5-9/16 (142mm)	5-11/16 (145mm)	5-7/8 (150mm)
"C"	3-3/16 (80mm)	3-3/16 (80mm)	3-3/8 (86mm)	3-1/8 (80mm)	3-3/8 (86mm)	3-5/8 (92mm)	3-1/16 (79mm)	3-5/16 (85mm)	3-9/16 (90mm)	3-5/16 (85mm)	3-7/16 (88mm)	3-5/8 (93mm)

MODEL CONNECTIONS	LFLM495-5 1/2" QUICK-CONNECT	LFLM496-5 3/4" QUICK-CONNECT	LFLM497-5 1" QUICK-CONNECT
"A"	6-5/8 (168mm)	6-15/16 (177mm)	7-1/8 (181mm)
"B"	6-1/4 (159mm)	6-7/16 (163mm)	6-1/2 (165mm)
"C"	4 (102mm)	4-3/16 (106mm)	4-1/4 (108mm)

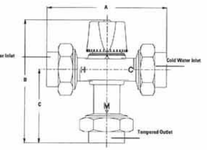

Note:
Dimensions are shown ±1/4"
Dimensions in brackets are in mm
Consult factory for dimensions w/press

Ordering Information

Model LFLM49 (80°- 120°F) (27° - 49°C) –

Valve
½" 5
¾" 6
1" 7

Inlets
Union NPT Female 1
Union Sweat 2
Union CPVC 3
Union PEX 4
Quick-Connect 5
w/press 1-w/press

Typical Specification

Thermostatic tempering valve shall be constructed using Lead Free* cast copper silicon alloy material which shall comply with state codes and standards, where applicable requiring reduced lead content. The valve shall feature advanced paraffin-based actuation technology and union connections for ease of maintenance. All internal components shall be corrosion-resistant. Valve shall feature integral checks to prevent cross-flow and inlet screens to filter out debris. The valve shall be ASSE 1069, ASSE 1070, ASSE 1017 and IAPMO cUPC listed. Capacity of the valve shall be 12.0 gpm (45.0 lpm) at 45psi (310 kPa) differential. Valve shall perform to a minimum flow of 0.5 gpm (2 lpm) to ASSE 1070. Control temperature shall be adjustable between 80°F - 120°F (27 - 49°C). The valve shall feature a vandal-resistant lockable handle to prevent tampering. The valve shall be a Powers' HydroGuard® Model LFLM495 (1/2", 15mm), LFLM496 (3/4", 20mm), LFLM497 (1", 25mm). Any alternate must have a written approval prior to bidding.

USA: Tel: (800) 669-5430 • Fax: (847) 229-0826 • PowersControls.com
Canada: Tel: (905) 332-4090 • Fax: (905) 332-7068 • PowersControls.ca
Latin America: Tel: (52) 81-1001-8600 • Fax: (52) 81-8000-7091 • PowersControls.com

© 2019 Powers

ES-PLT

For Water Heater and Hot Water Storage Tank Applications

Job Name _____ Contractor _____

Job Location _____ Approval _____

Engineer _____ Contractor's P.O. No. _____

Approval _____ Representative _____

LEAD FREE*

Series PLT
Potable Water Expansion Tanks



Series PLT Potable Water Expansion Tanks are designed to absorb the increased volume of water created by thermal expansion and to maintain balanced pressure throughout the potable water supply system.

Heated water expands, and in a domestic hot water system, the system may be closed when the potable water system is isolated from the public water supply by a one-way valve such as pressure reducing valve, backflow preventer or check valve. Provisions must be made for this expansion.

Series PLT expansion tanks absorb the increased volume of water created when the hot water storage tank is heated and keeps the system pressure below the relief setting of the T&P relief valve.

It is a pre-pressurized steel tank with an expansion membrane that prevents contact of the water with the air in the tank. This prevents loss of air to the water and insures long and trouble-free life for the system. These tanks may be used with all types of Direct Fired Hot Water Heaters (gas, oil or electric) and hot water storage tanks.

Features

- Rugged flexible butyl diaphragm
- Field adjustable pre-charge
- In-line and free standing models
- Can be used with most standard hot water heaters and storage tanks

Models

PLT-5-M1 ¾" male connection, tank volume 2.1 gal.
PLT-12-M1 ¾" male connection, tank volume 4.5 gal.
PLT-20-M1 ¾" male connection, tank volume 8.5 gal.
PLT-35-M1 1" female connection, tank volume 14.00 gal.

Specifications

The potable water expansion tank shall be of drawn steel construction. It shall have a Butyl diaphragm separating the air chamber from the water containing chamber. Inlet connector shall be Stainless Steel. Materials of manufacture for the diaphragm shall be FDA approved.

The potable water expansion tank shall be a Watts Model PLT.

Standards

Models PLT-5, PLT-12 and PLT-20 are Listed by IAPMO.
Certified to ANSI/NSF 61
Model PLT-35
Certified to ANSI/NSF 61

(73°F/23°C)

Note: The potable water expansion tank shall be installed in the cold water service pipe line on the supply side of the water heater (or water storage tank). A pressure relief valve sized and installed in accordance with local codes must be incorporated in the system.
In those systems requiring a combined temperature and pressure safety relief valve, the temperature and pressure relief valve should be sized and installed in accordance with local codes. Adequate drainage provisions should be provided where water flow will cause damage.

See chart on back

NOTICE

The information contained herein is not intended to replace the full product installation and safety information available or the experience of a trained product installer. You are required to thoroughly read all installation instructions and product safety information before beginning the installation of this product.

NOTICE

Inquire with governing authorities for local installation requirements

***The wetted surface of this product contacted by consumable water contains less than 0.25% of lead by weight.**

Watts product specifications in U.S. customary units and metric are approximate and are provided for reference only. For precise measurements, please contact Watts Technical Service. Watts reserves the right to change or modify product design, construction, specifications, or materials without prior notice and without incurring any obligation to make such changes and modifications on Watts products previously or subsequently sold.

WATTS®

Selection

This Quick Reference Selection Guide may be used as an alternative to using a formula to determine the correct expansion tank for the system. This table is based upon a relief valve setting of 150psi (10.3 bar), and a maximum of 50°F temperature rise.

To select the correct model PLT series tank, simply go the supply pressure equal to the system supply pressure (for pressures between those shown use next highest supply pressure shown), read across the chart to the correct tank as indicated by the water heater capacity (for capacities between those shown, use next highest capacity).

To accommodate the thermal expansion required for higher temperature and/or higher pressure systems, multicle tanks may be used. Please contact the factory for sizing information.

SUPPLY PRESSURE (PSIG)	WATER HEATER (GALLONS) 20	30	40	50	80	100	120
40							
50							
55							
60							
70							
80							
90							
100							
110							
120							

PLT-5 PLT-20
PLT-12 PLT-35
Multiple tanks required - consult factory

Materials

Diaphragm: Butyl rubber
Inlet Connection: Stainless Steel

Technical Information

DESCRIPTION	PLT-5	PLT-12	PLT-20	PLT-35
Max. Pressure - PSI	150	150	150	150
Max. Temp. - °F	200	200	200	200
Tank Volume - Gal.	2.1	4.5	8.5	14.00
Air Pre-charge - PSI	20	20	20	28
Connections Size - Inches	¾ Male	¾ Male	¾ Male	1 Female
Diameter - Inches	8	10.5	12.5	16.0
Length - Inches	11	13.5	19.2	21.7
Weight - Lbs.	5.5	10	15	32

Acceptance Volume

AIR SIDE PRE-PRESSURE (PSI)	WATER SIDE VOLUME AT 150PSI (GALLONS) PLT-5	PLT-12	PLT-20	PLT-35
20	1.48	3.42	7.102	10.69
40	1.26	2.88	5.882	9.17
60	1.0	2.49	4.705	7.59
80	.8	1.85	4.009	6.07

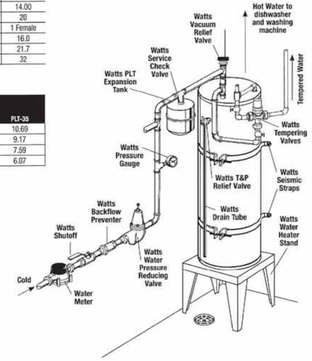

USA: T: (978) 689-6066 • F: (978) 975-8350 • Watts.com
Canada: T: (905) 332-4090 • F: (905) 332-7068 • Watts.ca
Latin America: T: (52) 81-1001-8600 • Watts.com

© 2010 Watts

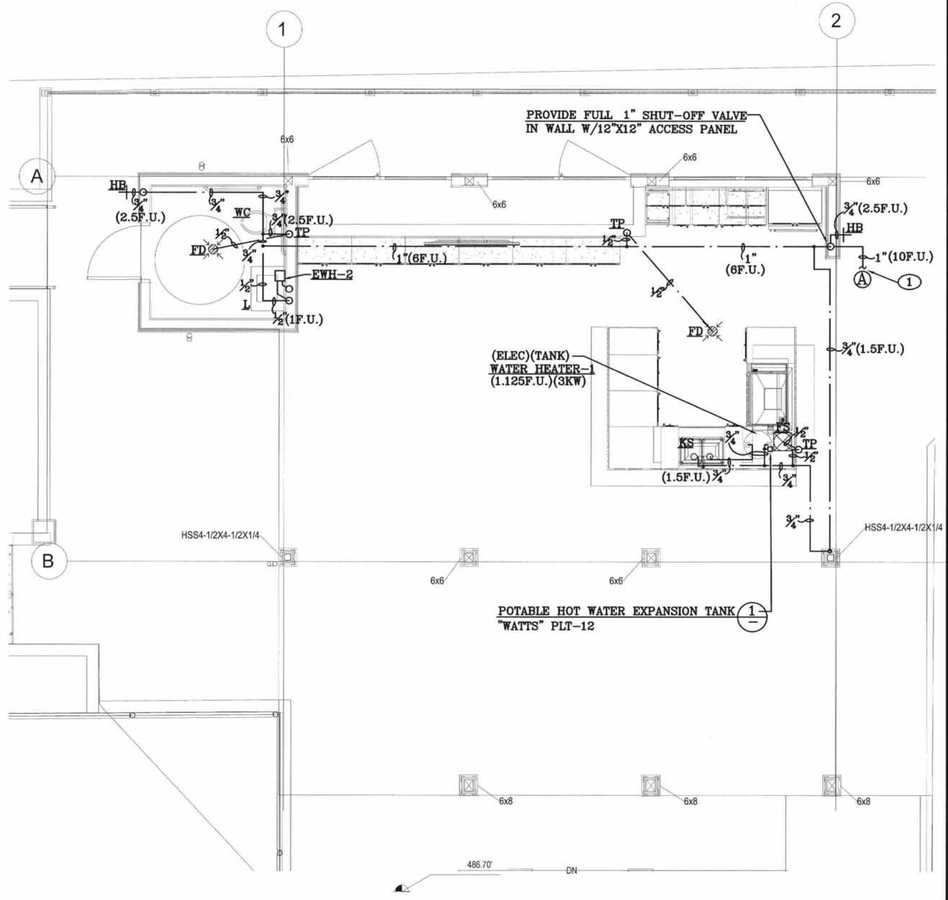

FLOOR PLAN (HOT & COLD WATER)

1/4"=1'-0"

California Energy Code 2022 | Section 120.3 Requirements for Pipe Insulation

TABLE 120.3-A PIPE INSULATION THICKNESS

FLUID OPERATING TEMPERATURE RANGE (°F)	INSULATION CONDUCTIVITY Conductivity (in Btu-in/h per ft² °F)	Mean Rating Tempurature (°F)		NOMINAL PIPE DIAMETER (in inches) <1	1 to <1.5	1.5 to <4	4 to<8	8 and larger
				INSULATION THICKNESS REQUIRED (in inches)				
Space heating, Service Water Heating Systems (Steam, Steam Condensate, Refrigerant, Space Heating, ServiceHot Water)				Minimum Pipe Insulation Required (Thickness in inches or R-value)				
Above 350	0.32-0.34	250	Inches	4.5	5.0	5.0	5.0	5.0
			R-value	R-37	R-41	R-37	R-27	R-23
251-350	0.29-0.32	200	Inches	3.0	4.0	4.5	4.5	4.5
			R-value	R-24	R-34	R-35	R-26	R-22
201-250	0.27-0.30	150	Inches	2.5	2.5	2.5	3.0	3.0
			R-value	R-21	R-20	R-17.5	R-17	R-14.5
141-200	0.25-0.29	125	Inches	1.5	1.5	2.0	2.0	2.0
			R-value	R-11.5	R-11	R-14	R-11	R-10
105-140	0.22-0.28	100	Inches	1.0	1.5	1.5	1.5	1.5
			R-value	R-7.7	R-12.5	R-11	R-9	R-8
				Nominal Pipe Diameter (in inches) <1	1 to <1.5	1.5 to <4	4 to<8	8 and larger
Space cooling systems (chilled water, refrigerant and brine)				Minimum Pipe Insulation Required (Thickness in inches or R-value)[1]				
40-60	0.21-0.27	75	Inches	Nonres 0.5 / Res 0.75	Nonres 0.5 / Res 0.75	1.0	1.0	1.0
			R-value	Nonres R-3 / Res R-6	Nonres R-3 / Res R-5	R-7	R-6	R-5
Below 40	0.20-0.26	50	Inches	1.0	1.5	1.5	1.5	1.5
			R-value	R-8.5	R-14	R-12	R-10	R-9

Footnote to TABLE 120.3-A:
1. These thickness are based on energy efficiency considerations only. Issues such as water vapor permeability or surface condensation sometimes require vapor retarders or additional insulation.

Exception 1 to Section 120.3: Factory-installed piping within space-conditioning equipment certified under Section 110.1 or 110.2.

Exception 2 to Section 120.3: Piping that conveys fluids with a design operating temperature range between 60°F and 105°F.

Exception 3 to Section 120.3: Where the heat gain or heat loss to or from piping without insulation will not increase building source energy use.

Exception 4 to Section 120.3: Piping that penetrates framing members shall not be required to have pipe insulation for the distance of the framing penetration. Metal piping that penetrates metal framing shall use grommets, plugs, wrapping or other insulating material to assure that no contact is made with the metal framing.

Note: Authority: Sections 25213, 25218, 25218.5, 25402 and 25402.1, Public Resources Code. Reference: Sections 25007, 25008, 25218.5, 25310, 25402, 25402.1, 25402.4, 25402.5, 25402.8, and 25943, Public Resources Code.

2-23-23

P-3
FLOOR PLAN NUMBERED NOTES (HOT & COLD WATER):

1. FOR CONT. SEE (A) IN "SITE PLAN" ON SHEET P-2

NOTE: FOR HOT & COLD WATER PIPING SIZE SEE "HOT & COLD WATER RISER DIAGRAM" ON SHEET P-5.

REGISTERED PROFESSIONAL ENGINEER RAYMOND MENG ZHONG No. M 24536 EXP 06-30-25 MECHANICAL STATE OF CALIFORNIA

REVISIONS	BY

PERFECT DESIGN & MANAGEMENT INC.
Design & Consulting
Air-Conditioning, Plumbing, Fire Sprinkler System.
Electrical, Title 24 Energy Calculation.
2416 W. Valley Blvd. Tel: (626) 289-8808
Alhambra, CA 91803 Fax: (626) 289-4913
E-Mail:perfectaaa2@gmail.com

CABANA
2 PORTUGUESE BEND RD.
ROLLING HILLS, CA 90274

Date 06 - 16 - 23
Scale
Drawn K.C.
Job # Q23-385
Sheet **P-3**
Of Sheets

NOTES:

1. ALL PLUMBING WORK SHALL BE PER CPC 2022 AND CALIFORNIA ENERGY CODE (CEC2) 2022 T24.

2. HOT WATER PIPING SHALL BE INSULATED AS PER ENERGY CONSERVATION STANDARDS. TITLE 24. 120.3-A.

3. ALL HOT WATER PIPING WILL BE INSTALLED WITH A MIN OF R-6 INSULATION.

4. ALL REQUIRED CLEANOUTS SHALL BE INSTALLED AS PER CPC 2022 SEC. 707.0 & 719.0 OF THE PLUMBING CODE.

5. EACH VENT SHALL RISE VERTICALLY TO A POINT NOT LESS THAN SIX (6) INCHES IN HEIGHT ABOVE THE FLOOD LEVEL RIM OF THE FIXTURE BEFORE BEING CONNECTED TO ANY OTHER VENT.

6. EACH VENT PIPE OR STACK SHALL EXTEND THRU ITS FLASHING AND SHALL TERMINATE VERTICALLY NOT LESS THAN SIX (6) IN ABOVE THE ROOF NOR LESS THAN ONE (1) FOOT FOM ANY VERTICAL SURFACE.

7. FOR AIR CONDITIONING UNIT CONDENSATE DRAIN. INSTALLED BY PLUMBER. SEE MECHANICAL DRAWINGS.

8. ALL POTABLE WATER SYSTEMS SHALL BE DISINFECTED PRIOR TO USE ACCORDING TO THE METHOD SET IN SECTION 609.10 OF THE PLUMBING CODE CPC 2022.

9. POTABLE WATER SUPPLY TO CARBONATOR SHALL BE PROTECTED BY APPROVED TYPE NON-REMOVABLE PRESSURE VACUUM BREAKER DEVICE ("WILKINS" MODEL 760)

10. ANY WATER SYSTEM PROVIDED WITH A CHECK VALVE OR A PRESSURE REGULATING DEVICE WHICH DOES NOT HAVE A BYPASS FEATURE AT ITS SOURCE SHALL BE PROVIDED WITH AN APPROVED. LISTED. ADEQUATELY SIZED PRESSURE RELIEF VALVE.

11. WATER PRESSURE SHOCK ARRESTORS SHALL BE INSTALLED AS CLOSE AS POSSIBLE TO QUICK-ACTING VALVES AT THE END OF LONG PIPE OR NEAR BATTERIES OF FIXTURES OR BOTH.

12. EACH WATER CLOSET STOOL SHALL BE LOCATED IN A CLEAR SPACE NOT LESS THAN 30' IN WIDTH AND HAVE A CLEAR SPACE IN FRONT OF THE WATER CLOSET OF NOT LESS THAN 24".

13. PROVIDE APPROVED TYPE NON-REMOVABLE PRESSURE VACUUM BREAKER DEVICE ("WILKINS" MODEL 760) ONN THE COLD WATER MAKE-UP LINE TO THE EVAPOARATIVE COOLER(S). FOR THE NON-REMOVABLE PRESSURE VACUUM BREAKER DEVICE LOCATION SEE PLUMBING DRAWINGS (INSTALLED BY PLUMBING CONTRACTOR).

14. ALL HOSE BIBS AND THE JANITORS SINK ARE TO HAVE NONREMOVABLE BACK FLOW PREVENTION.

15. CONDENSATE DRAIN FROM COOLER SHALL TERMINATE IN FLOOR SINK W/ AIR GAP.

16. THE TENANT SERVING SOFT DRINKS. JUICES. ALCOHOLIC BEVERAGES OR ANY CORROSIVE LIGQID SHALL USE "DURION" PIPING FOR ALL BELOW FLOOR WASTE LINES.

17. CONDENSATE LINE FOR REFRIGERATION UNITS MAY NOT RUN HORIZONTALLY ACROSS ROOF. THEY SHALL TERMINATE AT TENANT'S TOILECE OF LAVATORY OR MOP SINK. OR APPROVED RECEPTOR. TENANT SHALL BE REQUIRED TO FURNISH COPPER CONDENSATE LINE.

18. INSTALLATION OF SOIL OR DRAIN PIPES IN FOOD HANDLING ESTABLISHMENTS WILL COMPLY WITH SECTION 317.0 CPC 2022.

19. BUILDING DRAIN AND VENT PIPING MATERIALS SHALL COMPLY WITH SECTION 701.0 AND 903.0 OF THE CPC 2022.

20. ALL SANITARY SYSTEM MATERIALS SHALL BE LISTED BY AN APPROVED LISTING AGENCY.

21. SERVICE WATER HEATING SYSTEMS AND EQUIPMENT SHALL COMPLY WITH ENERGY EFFICIENCY STANDARDS. T-24 2022.

22. PROVIDE EXPANSION TANK OR OTHER APPROVED METHOD OF RELIEVING PRESSURE PER SECTION 608 CPC 2022

23. WATER HEATER & WATER INSTALLATION SHALL COMPLY WITH CHAPTER 5 OF CPC 2022.

24. LAVATORY FAUCETS IN RESTROOMS SHALL BE SELF-CLOSING TYPE.

25. EACH FAUCET SHALL NOT EXCEED A WATER FLOW OF 1.8 GPM FOR SINK. .125 GPF MAX. FOR URINALS. 1.28 GPF MAX. FOR TOILETS.

26. SANITARY VENT SHALL TERMINATE NOT LESS THAN 10'-0" FROM. OR AT LEAST 3'-0" ABOVE ANY OPENABLE WINDOW. DOOR. OPENING. AIR INTAKE. OR VENT SHAFT. NOR LESS THAN 3'-0" IN EVERY DIRECTION FROM ANY LOT LINE. ALLEY AND STREET EXCEPTED. SECTION 906.2 CPC 2022.

27. ALL PLUMBING FIXTURES. PIPING AND MATERIALS SHALL BE LISTED OR LABELED AND INSTALLED AS PER A RECOGNIZED APPROVAL AGENCY.

28. SUPPORT HORIZONTAL CAST IRON VENT PIPING AT EVERY OTHER JOINT UNLESS OVER 4 FEET. THEN SUPPORT EVERY JOINT. SUPPORT ADJACENT TO JOINT NOT TO EXCEED 18" AND AT EACH HORIZONTAL BRANCH CONNECTION. PROVIDE HORIZONTAL BRACING EVERY 40 FEET. HANGERS SHALL NOT BE PLACED ON THE COUPLINGS.

29. PROVIDE END OF LINE CLEANOUTS ON ALL BRANCHES 5 FEET AND LONGER IN LENGTH AND AT ALL SINKS AND URINALS.

30. DO NOT BORE HOIES IN STUDS TO RUN HORIZONTAL VENTS. INSTALL VENTS VERTICALLY UNTILL 6" ABOVE THE TOP PLATES OF WALLS.

31. THE BACKFLOW DEVICE SHALL BE INSPECTED. TESTED AND CERTIFIED BY THE CROSS CONNECTION CONTROL PRIOR TO BUILDING AND SATETY INSPECTION.

32. DRAINAGE PIPING SHALL BE SUPPORTED AT INTERVALS NOT TO EXCEED THOSE SHOWN IN 2022 CPC TABLE 313.3.

33. PROVIDE LISTED WATER HAMMER DEVICES FOR ALL QUICK ACTING WATER VALVES. REQUIRED AT THE DISHWASHER. ICE MAKER. WASHING MACHINE. AND SIMILAR FIXTURES. CPC 2022 SEC. 609.11.

34. ALL WORK SHALL COMPLY WITH THE LATEST EDITION OF THE CALIFORNIA PLUMBING CODE WITH THE COUNTY AMENDMENTS AND ALL OTHER CODES AS MAY BE APPLICABLE WITHIN THIS JURISDICTION.

35. PROVIDE A TEMPERATURE & PRESSURE RELIEF VALVE ON THE WATER HEATERS. THE VALVE SHALL DISCHARGE TO A FLOOR SINK OR SIMILAR FIXTURE. (CPC 608.3. 608.4. 608.5)

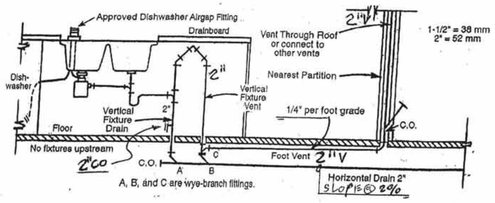

Figure 9-25
Special Venting for Island Fixtures

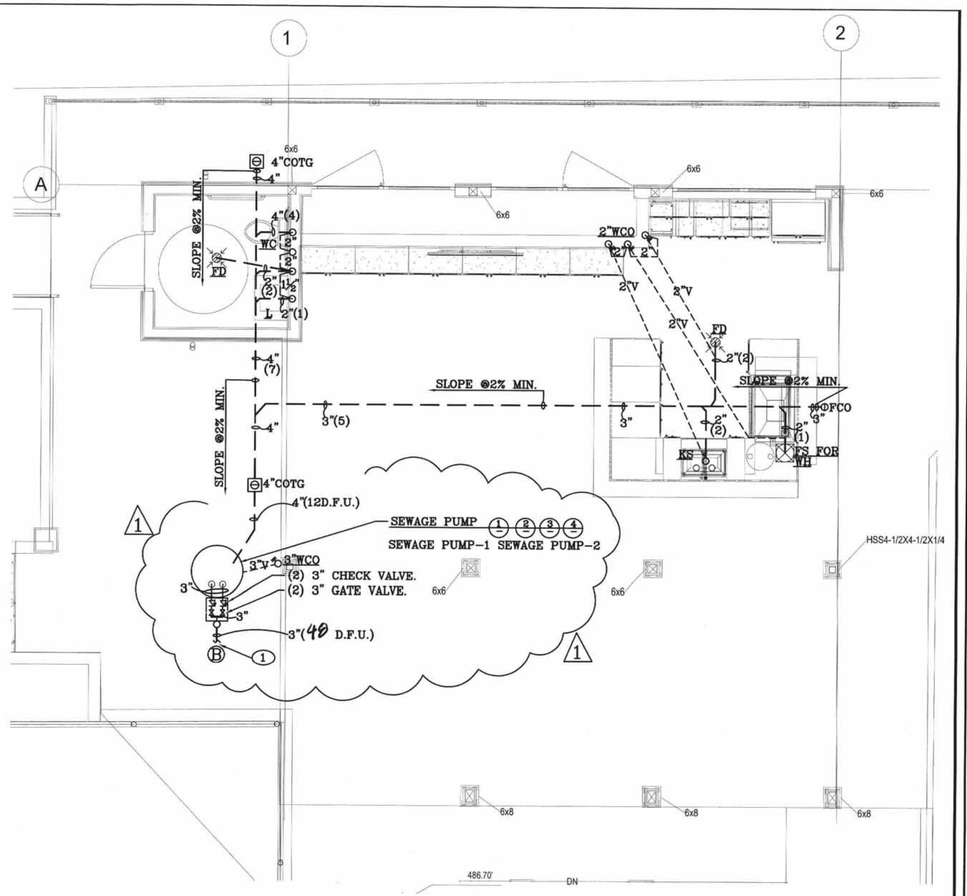

FLOOR PLAN (WASTE & VENT) N
1/4"=1'-0"

P-4
FLOOR PLAN NUMBERED NOTES (WASTE & VENT):

(1) NEW 4" WASTE LINE CONNECT TO EXISTING 4" WASTE LINE. PLUMBING CONTRACTOR TO VERIFY THE EXACT SIZE & LOCATION OF (E) THE WASTE LINE.
FOR CONT. SEE (B) IN "SITE PLAN" ON SHEET P-2

NOTE: FOR WASTE & VENT PIPING SIZE SEE "WASTE & VENT PIPING RISER DIAGRAM" ON SHEET P-5.

REVISIONS	BY
1 08-27-23	

PERFECT DESIGN & MANAGEMENT INC.
-Design & Consulting
-Air-Conditioning Plumbing, Fire Sprinkler System.
Electrical, Title 24 Energy Calculation.
2416 W. Valley Blvd.
Alhambra, CA 91803
Tel: (626) 289-8808
E-Mail:perfectasa2@gmail.com Fax: (626) 289-4913

REGISTERED PROFESSIONAL ENGINEER
RAYMOND MENG ZHONG
No. M-18936
EXP. 06-30-25
MECHANICAL
STATE OF CALIFORNIA

CABANA
2 PORTUGUESE BEND RD.
ROLLING HILLS, CA 90274

Date	08-27-23
Scale	
Drawn	K.C.
Job #	Q23-385
Sheet	P-4
Of	Sheets

"Quality Pumps Since 1999"

ZOELLER PUMP CO.

Product information presented here reflects conditions at time of publication. Consult factory regarding discrepancies or inconsistencies.

MAIL TO: P.O. BOX 16347 • Louisville, KY 40256-0347
SHIP TO: 3649 Cane Run Road • Louisville, KY 40211-1961
(502) 778-2731 • 1 (800) 928-PUMP • FAX (502) 774-3624

visit our web site: www.zoeller.com

SECTION: 2.30.015
FM1495
0305
Supersedes
0404

COMPARE THESE FEATURES

- Non-Clogging Vortex Impeller Design.
- Float operated, submersible (NEMA 6) 2-pole switch.
- Durable cast iron construction. Cast iron switch cap, motor, and pump housing.
- Engineered plastic base.
- Stainless steel screws, bolts, handle, guard, arm and seal assembly.
- Engineered, glass-filled, plastic impeller with metal insert.
- UL Listed 3-wire cord and plug. 15 ft. cord standard for automatic & nonautomatic.
- Corrosion resistant powder coated epoxy finish.
- Motor - .4 HP 115V & 230V, 1Ph., 60 Hz, 1725 RPM, oil filled PSC motor, hermetically sealed, automatic reset thermal overload protection.
- Upper and lower sleeve bearings running in bath of oil.
- Carbon and ceramic shaft seal.
- Passes 2 inch spherical solids.
- 2" NPT Discharge.
- On point - 12½" • Off point - 4½"

Note: The sizing of effluent systems normally requires variable level float(s) controls and properly sized basins to achieve required pumping cycles or dosing timers with nonautomatic pumps.

SIMPLEX AND DUPLEX SYSTEMS AVAILABLE

ZOELLER PUMP CO.

Manufacturers of . . .
"Quality Pumps Since 1999"

USE

264 SERIES

"WASTE-MATE"

(For Pump Prefix Identification see News & Views 0052)

SUBMERSIBLE
SEWAGE/EFFLUENT* OR DEWATERING PUMP
2" NPT DISCHARGE

Tested to UL Standard UL778 & Certified to CSA Standard C22.2 No. 108

POWDER COATED TOUGH™

SSPMA MEMBER

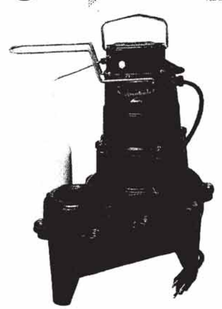

MODELS AVAILABLE
- Automatic
- Nonautomatic (for variable level systems)
- BE & BN264 available packaged with Piggyback variable level float switch.

*May be used in those states where codes do not restrict solids size in effluent systems.

© Copyright 2005 Zoeller Co. All rights reserved.

#4 operating point. (24 GPM, 14.346 FT)

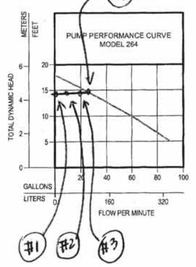

TOTAL DYNAMIC HEAD/FLOW SEWAGE AND DEWATERING

MODEL		264	
Feet	Meters	Gallons	Liters
5	1.5	90	341
10	3.0	60	227
15	4.6	23	87
Shut-off Head:		18 ft (5.5 m)	

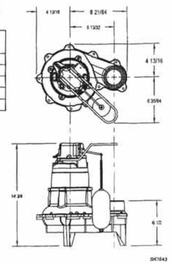

CONSULT FACTORY FOR SPECIAL APPLICATIONS

- Electrical alternators for duplex systems available with variable level float switches.
- Minimum recommended basin size
  Simplex-18"x30"
  Duplex-30"x36"
- Standard Automatic - Weight 34.5 lbs. .4 H.P.
- High water alarms available.
- Mechanical alternators available for duplex systems.
- For "M" and "D" models, the approximate gallons pumped out per cycle are:

Tank Diameter	Gallons Pumped
18" Simplex	8 Gallons
24" Simplex	15 Gallons
30" Duplex	22 Gallons
36" Duplex	33 Gallons
48" Duplex	60 Gallons

⚠ CAUTION Maximum temperature of sewage or dewatering must be limited to 130°F (54°C). For over 130°F (54°C) special quotation required.

	264 MODELS				CONTROL SELECTION	
	Model	Volts	Ph	Mode	Amps	Simplex	Duplex
USE →	M264	115	1	Auto	9.4	1	4
	N264	115	1	Non	9.4	2 or 3	4
	D264	230	1	Auto	4.7	1	4
	E264	230	1	Non	4.7	2 or 3	4

SELECTION GUIDE

1. Integral float operated mechanical switch, no external control required.
2. For automatic use single piggyback variable level float switch or double piggyback variable level float switch. Refer to FM0477.
3. See FM1228 for correct model of simplex control panel.
4. See FM0712 for correct model of duplex control panel or FM1663 for a residential alternator system.

For information on additional Zoeller products refer to catalog on Piggyback Variable Level Float Switches, FM0472; Electrical Alternator, FM0488; Mechanical Alternator, FM0489; Sump/Sewage Basins, FM0497; and Single Phase Simplex Pump Control, FM1066; Alarm System, FM0702.

⚠ CAUTION
All installation of controls, protection devices and wiring should be done by a qualified licensed electrician. All electrical and safety codes should be followed including the most recent National Electric Code (NEC) and the Occupational Safety and Health Act (OSHA).

RESERVE POWERED DESIGN

For unusual conditions a reserve safety factor is engineered into the design of every Zoeller pump.

www.zoeller.com

ZOELLER PUMP CO.

MAIL TO: P.O. BOX 16347
Louisville, KY 40256-0347
SHIP TO: 3649 Cane Run Road
Louisville, KY 40211-1961
(502) 778-2731 • 1 (800) 928-PUMP
FAX (502) 774-3624

Manufacturers of . . .
"Quality Pumps Since 1999"

© Copyright 2005 Zoeller Co. All rights reserved.

Arbuckle Electric Motors
7648 Santa Monica Blvd. Hollywood, CA 90046
TEL (323) 876-7100 FAX (323) 876-1850

FIBERGLASS SUMP BASIN
L.A.CITY APPROVED
APPROVAL NUMBER RR5311

36" A DIA.
40" B DIA.
48" C DIA.

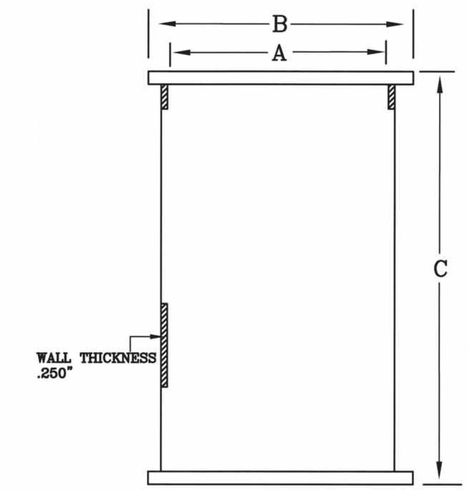

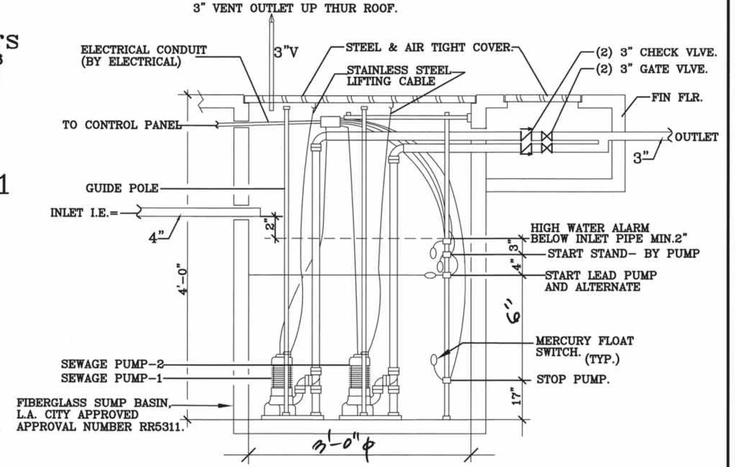

PUMP SP- 1 AND SP- 2. (3/—)
NOT TO SCALE.

RR-5311: TOPP INDUSTRIES, INC.
SUMP BASINS
LIST OF APPROVED FIBERGLASS MODELS

BASIN	COVERS
FB18X###	C18--
FB24X###	C24--
FB30X###	C30--
FB36X###	C36--
FB42X###	C42--
FB48X###	C48--
FB60X###	C60--
FB72X###	C72--
FB96X###	C96--
FB120X###	C120--

LEGEND:
###=Basin Depth, in inches.
F=Fiberglass Anti-Flotation Flange.
S=Steel.
SS=Simplex Steel.
SSV=Simplex with side vent.
---=Basin Cover.
WSL=Light Duty Solid Steel.
WSH=Heavy Duty Solid Steel.
WP =Solid Polupropylene.
SP =Simpiex Polupropylene.
SSL =Light Duty Simpiex.
SSH =Heavy Duty Simpiex.
WF =Solid Fiberglass.
SSA =SimplexSteel with pump access.
DSA =Duplex Steel.
HSF =Fiberglass Hatch Cover.
HSS =Steel Hatch.
HSA =Aluminum Hatch.
WS =Solid Steel.

CALCULATION FOR SEWAGE PUMP:

1) TOTAL SEWAGE PUMP INLET F.U.= 12 F.U.
2) TOTAL SEWAGE PUMP INLET GPM= 9 (GPM) (PER 2022 CPC CHART A-3)
3) DUAL SEWAGE PUMP DISCHARGE TOTAL GPM = 2 X 9 (GPM) = 18 (GPM)
4) DUAL SEWAGE PUMP DISCHARGE TOTAL F.U. = 18 (GPM) X 2 (F.U./GPM) = 36 (F.U.) (WE USE 20 GPM MIN.)
5) SEWAGE SUMP PUMP TOTAL HEAD
   = 14 (FT) (STATIC HEAD) + .127 (FT) (FRICTION HEAD) = 14.127 FT.

SUMP VOLUME CALCULATION:

ASSUM 1 MINUTE PUMP TIME BETWEEN ON AND BOTH OFF, SO

1) SUMP PUMP FLOW : 24 GPM
2) SUMP VOLIME : 24 / 7.5 = 3.2 CU.FT.
3) THE HEIGHT BETWEEN ON AND OFF = 3.2 CU.FT /(3'-0" ø) + .4527 FT (WE USE 6" INCH)

STEP 1. CALCULATE THE EQUIVALENT PIPE LENGTH:
USE THE FOLLOWING EQUIVALENT LENGTH FOR THE FITTINGS:

DIAMETER OF FITTING IN INCHES	1/4 BENT (45°) FEET	1/2 BENT (90°) FEET	GATE VALVE FEET	BACKWATER VALVE FEET
2"	4'	7'	1.3'	11'
3"	6'	10'	2'	16'
4"	8'	14'	2.7'	22'
6"	12'	20'	4'	31'

(1) 1/4 BENT (45°)	6 FT
(2) 1/2 BENT (90°)	20 FT
(1) GATE VALVE	2 FT
(1) BACKWATER VALVE	16 FT
DEVELOPED PIPE LENGTH	162 FT
TOTAL DEVELOPED LENGTH	= 206 FT

STEP 2. CALCULATE THE SYSTEM CURVE:

#4 $h_h = \frac{10.51Q^{1.85}}{C^{1.85}d^{4.87}}l$ (feet of water)

Q:Flow in g.p.m.
d: pipe diameter in inches.

$$= \frac{10.51 \times (24)^{1.85} \times 206}{(150)^{1.85} \quad (3)^{4.87}} = \frac{10.51 \times 357.59 \times 206}{10611.3 \times 210.66} = .346 \text{ (FT)}$$

Use: C=100 for cast iron pipes C=140 for cement lined pipes
C=120 for black iron pipes C=150 for plastic and copper pipes
h=difference in elevation between the bottom of the sump basin and the gravity sewer line.

#	Q	h_h	H= 14+h_h
1	0	0	14'
2	10	.068	14.068'
3	20	.247	14.647'
4	24	.346	14.346'

OPERATING POINT

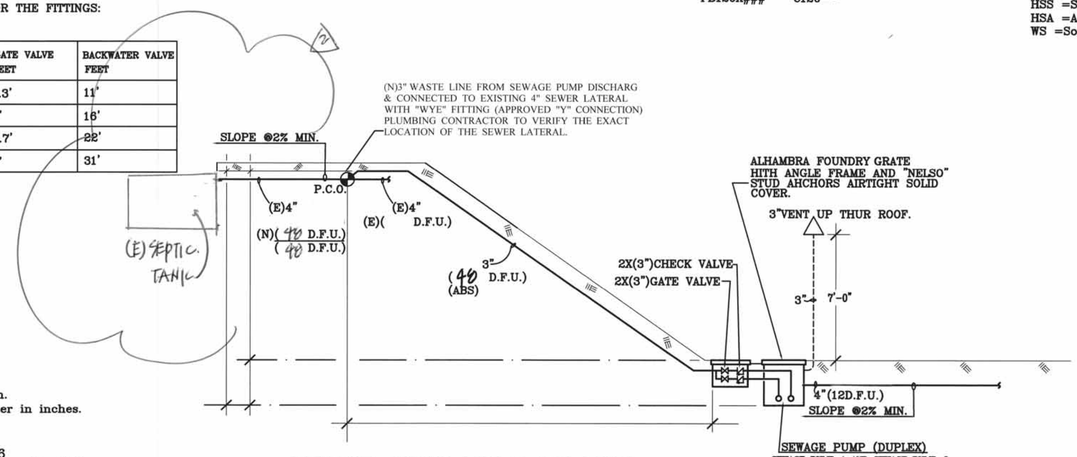

SEWAGE PUMP RISER DIAGRAM.
N.T.S.

03-17-23

REVISIONS | BY
2-6-7-24

PERFECT DESIGN & MANAGEMENT INC.
Design & Consulting
Air-Conditioning, Plumbing, Fire Sprinkler System.
Electrical, Title 24 Energy Calculation.
2416 W. Valley Blvd. Tel: (626) 289-8808
Alhambra, CA 91803 Fax: (626) 289-4913
E-Mail:perfectaas2@gmail.com

REGISTERED PROFESSIONAL ENGINEER
RAYMOND MENG ZHONG
No. M 27625
EXP. 06-30-25
MECHANICAL
STATE OF CALIFORNIA

CABANA
2 PORTUGUESE BEND RD.
ROLLING HILLS, CA 90274

Date 8-7-24
Scale
Drawn K.C.
Job # Q23-385
Sheet
P-4.1
Of Sheets

260

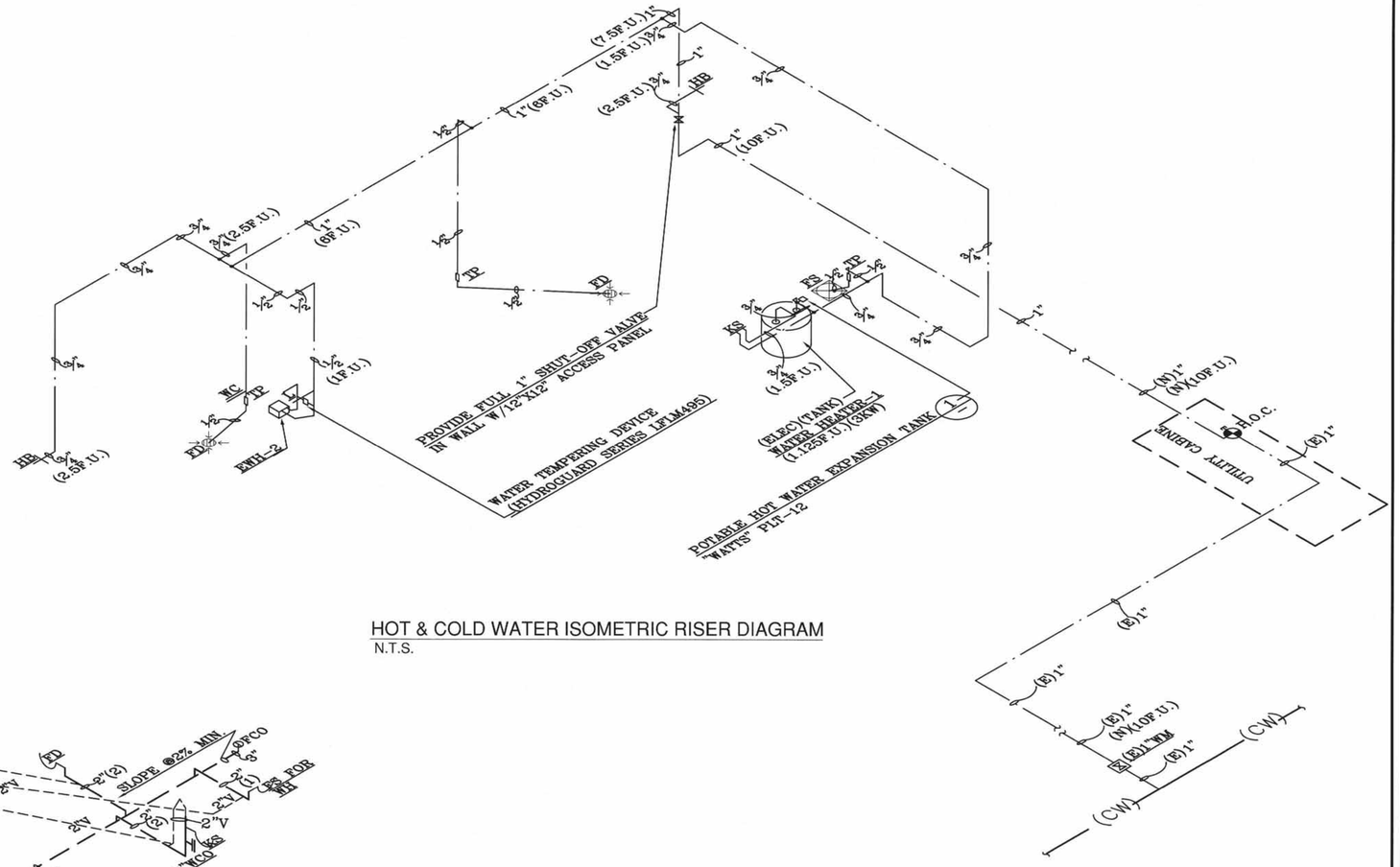

HOT & COLD WATER ISOMETRIC RISER DIAGRAM
N.T.S.

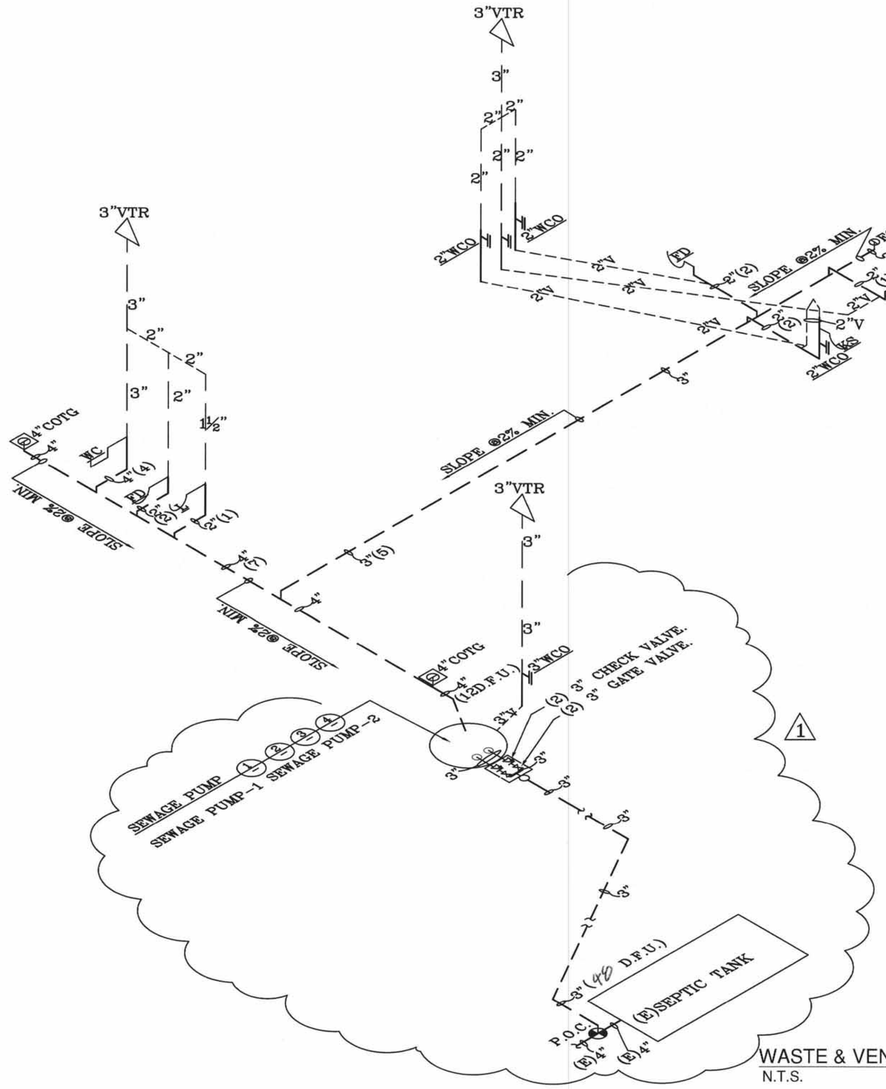

WASTE & VENT ISOMETRIC RISER DIAGRAM
N.T.S.

REVISIONS	BY

PERFECT DESIGN & MANAGEMENT INC.
Design & Consulting
Air-Conditioning, Plumbing, Fire Sprinkler System,
Revised Title 24 Energy Calculation.
2416 W. Valley Blvd.
Alhambra, Ca. 91803
Tel: (626) 289-8808
E-Mail:perfectasa2@gmail.com Fax: (626) 289-4913

REGISTERED PROFESSIONAL ENGINEER
RAYMOND MENG ZHONG
No. M27535
EXP. 06-30-25
MECHANICAL
STATE OF CALIFORNIA

CABANA
2 PORTUGUESE BEND RD.
ROLLING HILLS, CA 90274

Date	08 - 27 - 23
Scale	
Drawn	K.C.
Job #	Q23-385
Sheet	P-5
Of	Sheets

Attachment G

ROLLING HILLS COMMUNITY TENNIS COURT

2 PORTUGUESE BEND ROAD
ROLLING HILLS, CA 90274

PROJECT INFORMATION :

OWNER	: ROLLING HILLS COMMUNITY ASSOCIATION
CONTACT	: KRISTEN RAID, KATHRYN BISHOP
MAILING ADDRESS	: 1 PORTUGUESE BEND ROAD, ROLLING HILLS, CA 90274
PROJECT ADDRESS	: 1 PORTUGUESE BEND ROAD, ROLLING HILLS, CA 90274
PHONE NUMBER	: (310) 544-6222
EMAIL	: KRAIG@RHCA.NET, KBISHOP@RHCA.NET
LANDSCAPE ARCHITECT	: RICHIE-BRAY, INC. LANDSCAPE ARCHITECT
MAILING ADDRESS	: 904 SILVER SPUR ROAD #395, ROLLING HILLS ESTATES, CA 90274
PHONE NUMBER	: (310) 377-5868
EMAIL	: DEB@RICHIE-BRAY.COM
ARCHITECT	: OBELISK ARCHITECTS
MAILING ADDRESS	: 3800 PACIFIC COAST HIGHWAY, TORRANCE, CA 90505
PHONE NUMBER	: (310) 373-3568
EMAIL	:

DWG. NO.	SCALE	DATE	REV. DATE	DESCRIPTIONS
L-0	N/A	06-15-2023	---	COVER SHEET
LP-1	1/8" = 1'-0"	06-15-2023	06-27-2023	PLANTING PLAN
LP-2	N/A	06-15-2023	06-27-2023	PLANT SCHEDULE
LP-3	NTA	06-15-2023	---	PLANTING DEATILS
LI-1	N/A	06-15-2023	---	IRRIGATION PLAN
LI-2	AS SHOWN	06-15-2023	---	IRRIGATION DETAILS
LI-3	N/A	06-15-2023	---	IRRIGATION DETAILS
LI-4	1/8" = 1'-0"	06-15-2023	---	IRRIGATION SPECIFICATION
LI-5	1/8" = 1'-0"	06-15-2023	---	IRRIGATION SPECIFICATION
LL-1	NTS	06-15-2023	07-06-2023	LIGHTING PLAN
LL-2	NTS	06-15-2023	07-06-2023	LIGHTING SPECIFICATION
LL-3	NTS	06-15-2023	---	LIGHTING SPECIFICATION

SCOPE OF WORK:

THE SCOPE OF WORK FOR THIS PROJECT INCLUDES:

- PLANTING
- IRRIGATION
- LIGHTING

GENERAL NOTES :

1. ANY YARD DRAINAGE IMPROVEMENTS SHALL BE INSPECTED AND CERTIFIED BY THE ENGINEER OF RECORD PRIOR TO FINAL APPROVAL.
2. ANY DRAINAGE DIRECTED TO THE STREET THROUGH PIPING SHALL BE DRAWN UP BY A LICENSED CIVIL ENGINEER AND SUBMITTED TO THE CITY ENGINEER FOR APPROVAL PRIOR TO OBTAINING A PUBLIC WORKS PERMIT FOR CURB CORING.
3. CONTRACTOR TO VERIFY LOCATIONS OF SMOKE DETECTORS AND CARBON MONOXIDE ALARMS IN NEW WORK PER SECTIONS R314 & R315 OF THE CRC RESPECTIVELY.
4. ALL CONSTRUCTION WASTE AND DEBRIS MUST BE CONTAINERIZED AT ALL TIMES & MUST BE ATHENS DUMPSTERS ONLY (CALL 1-888-336-6100)
5. A RE-INSPECTION FEE MAY BE CHARGED BY THE CITY FOR AN INSPECTION WHICH IS NOT ACCESSIBLE, OR APPROVED PLANS ARE NOT ON SITE, OR JOB IS NOT READY AND ALL COSTS SHALL BE BORNE BY THE CONTRACTOR RESPONSIBLE FOR THE SAID WORK.
6. ANY AND ALL DEVIATIONS FROM THE PLANNING COMMISSION APPROVED PLANS REQUIRE THAT REVISED PLANS BE SUBMITTED TO THE PLANNING DEPARTMENT FOR REVIEW AND APPROVAL.
7. ALL GENERAL CONTRACTORS, SUB-CONTRACTORS, ARCHITECTS & ENGINEERS CONDUCTING BUSINESS WITHIN THE CITY ARE REQUIRED TO MAINTAIN A CURRENT CITY BUSINESS LICENSE AS DESCRIBED IN THE MUNICIPAL CODE ORDINANCE NO. 092-559 AND RESLOLUTION NO. R92-72.
8. PER LOCAL REQUIREMENTS, THE WORKING HOURS ARE BETWEEN 7:00 AM TO 7:00 PM MONDAY THROUGH THURSDAY; 7:00 AM TO 5:00 PM ON FRIDAY AND 9:00 AM TO 5:00 PM ON SATURDAY WITH NO WORK ON SUNDAYS OR HOLIDAYS. THE ABOVE LIMITS ARE FOR REFERENCE ONLY AND CONTRACTOR ARE RESPONSIBLE TO ASCERTAIN THE WORKING HOUR LIMIT FROM RELEVANT CITY REQUIREMENTS.
9. ALL WORKS SHALL CONFORM TO ALL RELEVANT CURRENT CODES INCLUDING BUT NOT LIMITED TO :
   - 2022 CALIFORNIA BUILDING CODE
   - 2022 CALIFORNIA RESIDENTIAL CODE
   - 2022 CALIFORNIA PLUMBING CODE
   - 2022 CALIFORNIA MECHANICAL CODE
   - 2022 CALIFORNIA ELECTRICAL CODE
   - THE CURRENT REQUIREMENTS OF THE ENERGY
   - COUNTY OF LOS ANGELES FIRE CODE
10. DUST CONTROL MEASURES SHALL BE MAINTAINED THROUGHOUT THE DURATION OF THE PROJECT.
11. SEPARATE PUBLIC WORKS PERMIT SHALL BE REQUIRED FOR ANY APPROACH TO PRIVATE DRIVEWAYS, SEWER LATERALS, CURBS, CURB CORES, STEEET IMPROVEMENTS OR ANY WORK IN THE PUBLIC RIGHT OF WAY OR PARKWAYS.
12. CONTRACTOR TO ASCERTAIN ALL REQUIRED SWIMMING POOL FENCING TO BE MAINTAINED DURING CONSTRUCTION OR THE POOL SHALL BE EMPTIED.
13. PRIOR TO ANY DEMOLITION/GRADING WORK COMMENCES, A PRE-DEMO/GRADING MEETING SHALL BE ARRANGED WITH CITY BUILDING OFFICIALS, GENERAL CONTRACTOR, OWNER OR OWNER'S REPRESENTATIVE, SOIL ENGINEER, LANDSCAPE ARCHITECT AND/OR GRADING CONTRACTOR.
14. CONTRACTOR TO INSTALL ALL NECESSARY EROSION CONTROL AND SEDIMENT RETENTION PROVISIONS ACCORDING TO PLAN OR AS NECESSARY.
15. DETACHED PATIO COVERS, CARPORTS, ARBORS, OPEN LATTICE WORK & SUN SHADES MAY BE CONSTRUCTED OF ANY MATERIALS ALLOWED BY CODE.

NOTES :

1. ANY PLANTING OR HARDSCAPE ON CITY RIGHT OF WAY WILL BE REQUIRED TO BE REVIEWED AND APPROVED BY THE CITY.
2. ALL PLANTING THAT GROWS TO A HEIGHT THAT BECOMES A VIEW OBSTRUCTION, WILL BE REQUIRED TO BE TRIMMED.
3. VERIFY ALL DIMENSIONS ON SITE AND NOTIFY LANDSCAPE ARCHITECT OF ANY DISCREPANCIES PRIOR TO COMMENCEMENT OF WORKS.
4. WRITTEN DIMENSIONS TAKE PRECEDENCE OVER SCALED DIMENSIONS.
5. LANDSCAPE ARCHITECT IS NOT RESPONSIBLE FOR ANY MEANS OR METHODS OF CONSTRUCTION.
6. LANDSCAPE ARCHITECT IS NOT RESPONSIBLE FOR PROPOSED OR EXISTING CONDITIONS.
7. ALL DIMENSIONS ARE TO FINISHED SURFACES.
8. SEE ENGINEER'S DRAWINGS FOR ALL DETAILS & REQUIREMENTS OF CONCRETE, CMU WALLS, REBARS, ETC.
9. ALL EXPOSED GALV. STEEL PARTS TO BE PAINTED W/ PRIMER & 2 COATS OF POLYURETHANE PAINT.
10. CONTRACTOR TO VERIFY ALL EQUIPMENT SIZES, UTILITY REQUIREMENTS ETC. PRIOR TO CONSTRUCTION.
11. CONTRACTOR TO SUBMIT ALL MATERIAL & COLOR SAMPLES FOR APPROVAL PRIOR TO ANY WORK COMMENCES.
12. SURVEY INFORMATION WERE OBTAINED FROM OTHER'S RECORDS AND EXISTING SITE CONDITIONS. CONTRACTOR TO VERIFY ALL CONDITIONS PRIOR TO CONSTRUCTION.
13. SURVEY PREPARED BY :
    BOLTON ENGINEERS
    (310) 325-5580
14. SHOULD EXISTING CONDITIONS DIFFER FROM THIS LAYOUT, CONTRACTOR ARE TO INFORM LANDSCAPE ARCHITECT FOR VERIFICATION PRIOR TO WORK COMMENCES.

MAINTENANCE REQUIREMENTS

LANDSCAPE MAINTENANCE REQUIREMENTS SHALL BE AS FOLLOWS :

1. AN AUTOMATIC SPRINKLER OR IRRIGATION SYSTEM SHALL BE INSTALLED AND PERMANENTLY MAINTAINED IN WORKING ORDER.
2. ALL LANDSCAPING SHALL BE PERMANENTLY MAINTAINED.
3. LAWN AND GROUND COVERS SHALL BE MOWED OR TRIMMED REGULARLY. ALL PLANTED AREAS SHALL BE KEPT FREE OF WEEDS AND DEBRIS.
4. ALL PLANTINGS SHALL BE KEPT IN A HEALTHY AND GROWING CONDITION. ADJUSTMENTS, REPLACEMENTS, REPAIRS AND CLEANING SHALL BE A PART OF THE REGULAR MAINTENANCE.
5. STAKES, GUYS AND TIES ON TREES SHALL BE CHECKED REGULARLY FOR CORRECT FUNCTION. TIES SHALL BE ADJUSTED TO AVOID CREATING ABRASION OR GIRDING ON TRUNKS OR BRANCHES.



VICINITY MAP
SCALE: NTS

NORTH



SITE AERIAL VIEW
SCALE: NTS

NORTH

NOTES:

1. A DIAGRAM OF THE IRRIGATION PLAN SHOWING HYDROZONES SHALL BE KEPT WITH THE IRRIGATION CONTROLLER FOR SUBSEQUENT MANAGEMENT PURPOSES.
2. A CERTIFICATE OF COMPLETION SHALL BE FILLED OUT AND CERTIFIED BY EITHER THE DESIGNER OF THE LANDSCAPE PLANS, IRRIGATION PLANS, OR THE LICENSED LANDSCAPE CONTRACTOR FOR THE PROJECT.
3. AN IRRIGATION AUDIT REPORT SHALL BE COMPLETED A THE TIME OF FINAL INSPECTION.
4. A LANDSCAPE WASTE DIVERSION PLAN SHALL BE COMPLETED AND SUBMITTED WITH THE CERTIFICATE OF COMPLETION.

ROLLING HILLS CITY NOTES:

1. NO LANDSCAPE SHALL BE ALLOWED IN THE RHCA EASEMENT.
2. TREES SPECIFIED SHALL NOT GROW HIGHER THAN THE HEIGHT OF THE ROOF RIDGE.
3. TREES SHALL BE PLANTED IN LOCATIONS THAT DO NO HINDER VIEWS FROM THE ADJACENT LOTS.
4. TREES ARE REQUIRED TO BE MAINTAINED TO A HEIGHT NOT TO EXCEED THE ROOF RIDGE AND SO THAT VIEWS FROM ADJACENT LOTS ARE NOT OBSTRUCTED.
5. NEW PROPOSED TREES ARE NOT ON THE PROHIBITED TREE LIST.

INSTALLATION NOTE:
THE IRRIGATION AND PLANTING PLANS SHALL BE INSTALLED PER THE APPROVED LANDSCAPE PLAN DOCUMENTATION PACKAGE, ANY CHANGES OR SUBSTITUTIONS TO PLAN SHALL BE SUBJECT TO APPROVAL BY THE PLANNING DEPARTMENT AND LANDSCAPE ARCHITECT FOR THE CITY. A CERTIFICATE OF COMPLETION SHALL BE SUBMITTED PRIOR TO FINAL LANDSCAPE INSTALLATION INSPECTION.

LIST OF BMPS (BEST MANAGEMENT PRACTICES)

1.	CA1	DEWATERING OPERATIONS - REMOVE SEDIMENTS FROM GROUND WATER
2.	CA2	PAVING OPERATIONS - REDUCE DISCHARGE OF POLLUTANTS FROM PAVING OPERATIONS
3.	CA3	STRUCTURE CONSTRUCTION AND PAINTING - PREVENT & REDUCE DISCHARGE FROM CONSTRUCTION SITES & PAINTING PROJECTS
4.	CA10	MATERIAL DELIVERY AND STORAGE - PREVENT & REDUCE DISCHARGE OF POLLUTANTS TO STORM WATER FROM MATERIAL DELIVERY & STORAGE
5.	CA11	MATERIAL USE - PREVENT & REDUCE DISCHARGE OF POLLUTANTS TO STORM WATER FROM MATERIAL USE
6.	CA12	SPILL PREVENTION AND CONTROL - PREVENT & REDUCE DISCHARGE OF POLLUTANT TO STORM WATER SYSTEMS WITH GOOD HOUSEKEEPING
7.	CA20	SOLID WASTE MANAGEMENT - PREVENT & REDUCE DISCHARGE OF POLLUTANTS TO STORM WATER SYSTEMS FROM SOLID WASTE OR CONSTRUCTION
8.	CA21	HAZARDOUS WASTE MANAGEMENT - PREVENT & REDUCE DISCHARGE OF POLLUTANTS TO STORM WATER FROM TOXIC MATERIALS
9.	CA22	CONTAMINATED SOIL MANAGEMENT - PREVENT & REDUCE DISCHARGE OF POLLUTANTS TO STORM WATER CONTAMINATED SOIL
10.	CA23	CONCRETE WASTE MANAGEMENT - PREVENT & REDUCE DISCHARGE OF POLLUTANTS TO STORM WATER FROM CONCRETE WASTE
11.	CA24	SANITARY/SEPTIC WASTE MANAGEMENT - PREVENT & REDUCE DISCHARGE OF POLLUTANTS TO STROM WATER FROM SANITARY & SEPTIC SYSTEMS
12.	CA30	VEHICLE AND EQUIPMENT CLEANING - PREVENT & REDUCE DISCHARGE OF POLLUTANTS TO STORM WATER FROM CLEANING OF VEHICLES AND EQUIPMENT
13.	CA31	VEHICLE AND EQUIPMENT FUELING - PREVENT & REDUCE DISCHARGE OF POLLUTANTS TO STORM WATER FROM FUELING OF VEHICLES & EQUIPMENT
14.	CA32	VEHICLE AND EQUIPMENT MAINTENANCE - PREVENT & REDUCE DISCHARGE OF POLLUTANTS TO STORM WATER FROM MAINTENANCE OF VEHICLES & EQUIPMENT
15.	CA40	EMPLOYEE/SUBCONTRACTOR TRAINING -SWPPP STORM WATER POLLUTION PREVENTION PLAN
16.	ESC1	SCHEDULING - SEQUENCING THE CONSTRUCTION PROJECT TO REDUCE THE AMOUNT OF SOIL EXPOSED TO EROSION
17.	ESC2	PRESERVATION OF EXISTING VEGETATION - MINIMIZE DAMAGE AND EROSION BY PRESERVING THE EXISTING VEGETATION
18.	ESC10	SEEDING AND PLANTING - MINIMIZE EROSION WITH SEEDING AND PLANTING
19.	ESC11	MULCHING - FOR STABILIZING CLEARED AND FRESHLY SEEDED AREAS
20.	ESC20	GEOTEXTILES AND MATS - FOR STABILIZATION OF SOILS
21.	ESC21	DUST CONTROLS - REDUCE DUST AND SOIL EROSION
22.	ESC22	TEMPORARY STREAM CROSSING - RECOMMENDATIONS FOR INSTALLING A TEMPORARY CULVER, FORD OR BRIDGE
23.	ESC23	CONSTRUCTION ROAD STABILIZATION - RECOMMENDATIONS FOR DUST AND EROSION CONTROL
24.	ESC24	STABILIZED CONSTRUCTION ENTRANCE - RECOMMENDATIONS FOR DUST, SEDIMENT AND EROSION CONTROL FOR PUBLIC STREETS
25.	ESC30	EARTH DIKE - TEMPORARY BERM OR RIDGE OF COMPACTED SOIL
26.	ESC31	TEMPORARY DRAINS AND SWALES - TO DIVERT OFF-SITE RUNOFF AROUND A CONSTRUCTION SITE
27.	ESC32	SLOPE DRAIN - TEMPORARY PIPE TO DIVERT RUNOFF FROM THE TOP OF A SLOPE TO THE BOTTOM WITHOUT CAUSING EROSION
28.	ESC40	OUTLET PROTECTION - INSTALL RIP-RAP TO REDUCE SEDIMENT IN THE SOIL
29.	ESC41	CHECK DAMS - REDUCES VELOCITY OF CONCENTRATED STORM WATER FLOWS AND REDUCES EROSION
30.	ESC42	SLOPE ROUGHENING/TERRACING - CREATES MICROCLIMATES FOR ESTABLISHING VEGETATION
31.	ESC50	FOR SEDIMENTATION CONTROL
32.	ESC51	STRAW BALE BARRIERS - FOR SEDIMENTATION CONTROL
33.	ESC52	SAND BAG BARRIER - FOR SEDIMENTATION CONTROL
34.	ESC53	BRUSH OR ROCK FILTER - FOR SEDIMENTATION CONTROL AND VELOCITY REDUCTION
35.	ESC54	STORM DRAIN INLET PROTECTION - DEVICES WHICH DETAIN SEDIMENT LADEN RUNOFF
36.	ESC55	SEDIMENT TRAP - SMALL EXCAVATED OR BERMED AREA FOR SEDIMENTATION
37.	ESC56	SEDIMENT BASIN - POND CREATED TO ALLOW EXCESSIVE SEDIMENT TO SETTLE

Richie-Bray, Inc.
LANDSCAPE ARCHITECTURE

904 Silver Spur Road #395
Rolling Hills Estates, CA 90274
(310) 377-5868

E-mail: deb@richie-bray.com

LICENSED LANDSCAPE ARCHITECT
DEBORAH RICHIE #4407
Signature
Renewal Date
Date
STATE OF CALIFORNIA

PROJECT TITLE

ROLLING HILLS
COMMUNITY
TENNIS COURTS

2 PORTUGUESE BEND ROAD
ROLLING HILLS, CA 90274

ASSESSOR'S ID NO.: 7569-015-900

SHEET TITLE

COVER SHEET

REVISIONS

SCALE: N/A

DATE: 06-15-2023

DRAWN BY:

CHECKED:

XREF FILE:

PROJECT NO.

SHEET NO.

L-0

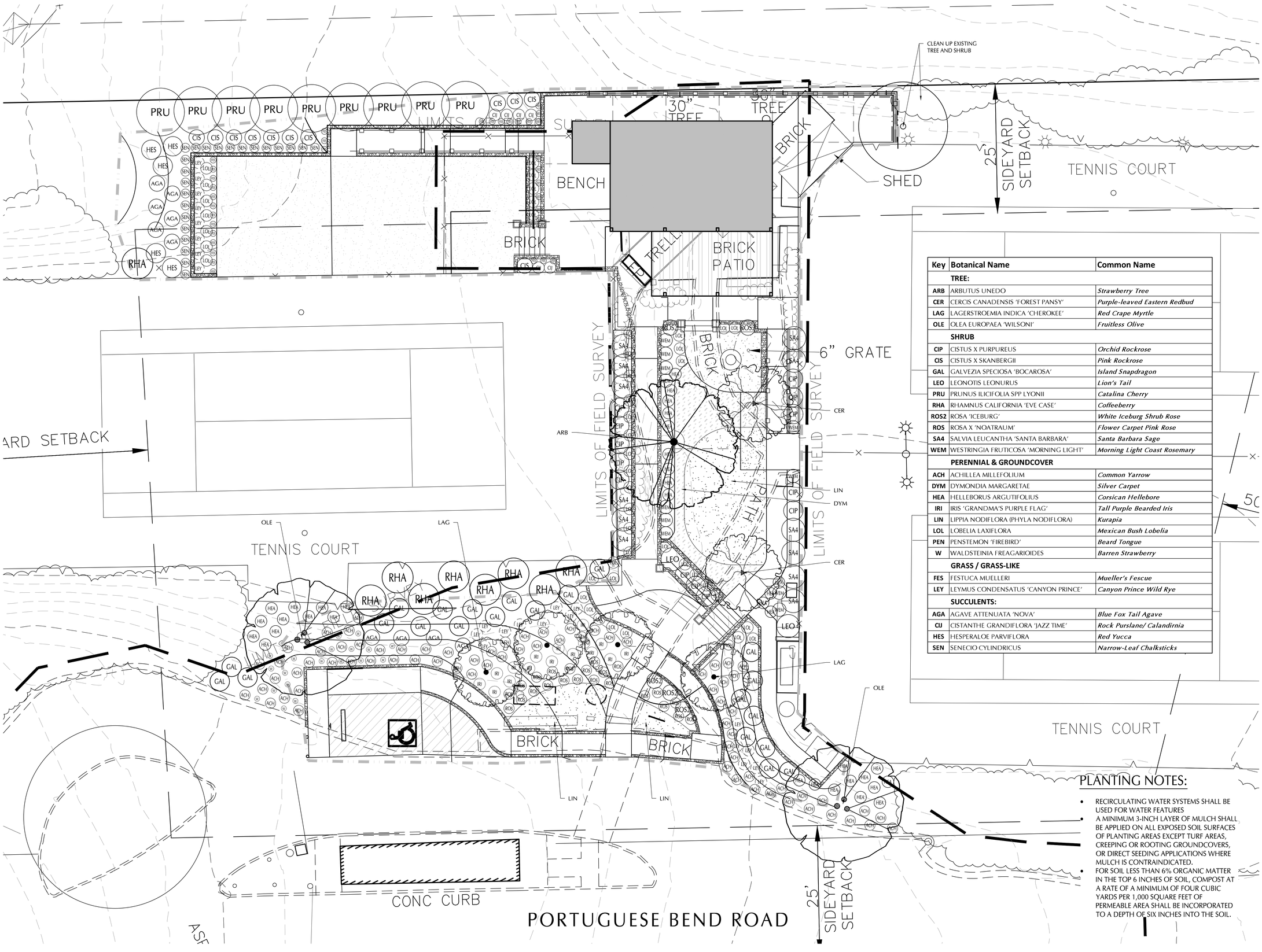

Key	Botanical Name	Common Name
	TREE:	
ARB	ARBUTUS UNEDO	*Strawberry Tree*
CER	CERCIS CANADENSIS 'FOREST PANSY'	*Purple-leaved Eastern Redbud*
LAG	LAGERSTROEMIA INDICA 'CHEROKEE'	*Red Crape Myrtle*
OLE	OLEA EUROPAEA 'WILSONI'	*Fruitless Olive*
	SHRUB	
CIP	CISTUS X PURPUREUS	*Orchid Rockrose*
CIS	CISTUS X SKANBERGII	*Pink Rockrose*
GAL	GALVEZIA SPECIOSA 'BOCAROSA'	*Island Snapdragon*
LEO	LEONOTIS LEONURUS	*Lion's Tail*
PRU	PRUNUS ILICIFOLIA SPP LYONII	*Catalina Cherry*
RHA	RHAMNUS CALIFORNIA 'EVE CASE'	*Coffeeberry*
ROS2	ROSA 'ICEBURG'	*White Iceburg Shrub Rose*
ROS	ROSA X 'NOATRAUM'	*Flower Carpet Pink Rose*
SA4	SALVIA LEUCANTHA 'SANTA BARBARA'	*Santa Barbara Sage*
WEM	WESTRINGIA FRUTICOSA 'MORNING LIGHT'	*Morning Light Coast Rosemary*
	PERENNIAL & GROUNDCOVER	
ACH	ACHILLEA MILLEFOLIUM	*Common Yarrow*
DYM	DYMONDIA MARGARETAE	*Silver Carpet*
HEA	HELLEBORUS ARGUTIFOLIUS	*Corsican Hellebore*
IRI	IRIS 'GRANDMA'S PURPLE FLAG'	*Tall Purple Bearded Iris*
LIN	LIPPIA NODIFLORA (PHYLA NODIFLORA)	*Kurapia*
LOL	LOBELIA LAXIFLORA	*Mexican Bush Lobelia*
PEN	PENSTEMON 'FIREBIRD'	*Beard Tongue*
W	WALDSTEINIA FREAGARIOIDES	*Barren Strawberry*
	GRASS / GRASS-LIKE	
FES	FESTUCA MUELLERI	*Mueller's Fescue*
LEY	LEYMUS CONDENSATUS 'CANYON PRINCE'	*Canyon Prince Wild Rye*
	SUCCULENTS:	
AGA	AGAVE ATTENUATA 'NOVA'	*Blue Fox Tail Agave*
CIJ	CISTANTHE GRANDIFLORA 'JAZZ TIME'	*Rock Purslane/ Calandirnia*
HES	HESPERALOE PARVIFLORA	*Red Yucca*
SEN	SENECIO CYLINDRICUS	*Narrow-Leaf Chalksticks*

PLANTING NOTES:

- RECIRCULATING WATER SYSTEMS SHALL BE USED FOR WATER FEATURES
- A MINIMUM 3-INCH LAYER OF MULCH SHALL BE APPLIED ON ALL EXPOSED SOIL SURFACES OF PLANTING AREAS EXCEPT TURF AREAS, CREEPING OR ROOTING GROUNDCOVERS, OR DIRECT SEEDING APPLICATIONS WHERE MULCH IS CONTRAINDICATED.
- FOR SOIL LESS THAN 6% ORGANIC MATTER IN THE TOP 6 INCHES OF SOIL, COMPOST AT A RATE OF A MINIMUM OF FOUR CUBIC YARDS PER 1,000 SQUARE FEET OF PERMEABLE AREA SHALL BE INCORPORATED TO A DEPTH OF SIX INCHES INTO THE SOIL.

Richie-Bray, Inc.
LANDSCAPE ARCHITECTURE

904 Silver Spur Road #395
Rolling Hills Estates, CA 90274
(310) 377-5868

E-mail: deb@richie-bray.com

LICENSED LANDSCAPE ARCHITECT
DEBORAH RICHIE #4467
Signature
Renewal Date
Date
STATE OF CALIFORNIA

PROJECT TITLE

ROLLING HILLS
COMMUNITY
TENNIS COURTS

2 PORTUGUESE BEND ROAD
ROLLING HILLS, CA 90274

ASSESSOR'S ID NO.: 7569-015-900

SHEET TITLE

PLANTING PLAN

REVISIONS

06-27-2023

SCALE: 1/8" = 1'-0"

DATE: 06-15-2023

DRAWN BY:

CHECKED:

XREF FILE:

PROJECT NO.

SHEET NO.

LP-1

PLANTING NOTES:

1. ALL PLANTS ARE IDENTIFIED BY TYPICAL SYMBOLS. PLANT QUANTITIES ARE APPROXIMATE AND PROVIDED FOR THE CONTRACTOR'S CONVENIENCE. IN THE EVENT OF DISCREPANCIES IN PLANT COUNT, QUANTITIES INDICATED BY PLANT SYMBOLS ON THE PLAN PREVAIL.
2. PLANTS AND INSTALLATION TO MEET HIGHEST QUALITY INDUSTRY STANDARD. LOCATE AND SECURE ALL SPECIFIED PLANTS WITHIN TWO WEEKS OF AWARD OF CONTRACT AND SHOW PROOF OF TO LANDSCAPE ARCHITECT IN WRITING THAT PLANTS HAVE BEEN SECURED. NOTIFY LANDSCAPE ARCHITECT IMMEDIATELY OF ANY PLANT SOURCING DIFFICULTY.
3. CONTACT LANDSCAPE ARCHITECT FOR DECISION REGARDING PROPOSED PLANT SUBSTITUTIONS 4 WEEKS PRIOR TO INSTALLATION.
4. THE LANDSCAPE ARCHITECT RESERVES THE RIGHT TO REVIEW ALL PLANT MATERIAL AT THE NURSERY PRIOR TO DELIVERY TO JOB SITE. IN LIEU OF NURSERY REVIEW THE LANDSCAPE ARCHITECT MAY REQUEST PHOTOS AND/OR SPECIFICATIONS OF PLANT MATERIAL TO BE PROVIDED PRIOR TO DELIVERY.
5. LANDSCAPE ARCHITECT RESERVES THE RIGHT TO REFUSE PLANTS DELIVERED TO SITE THAT ARE SUBSTANDARD. REPLACEMENT PLANTS ARE TO BE SUPPLIED BY CONTRACTOR AT NO ADDITIONAL COST TO OWNER.
6. ALL PLANTS DELIVERED TO THE SITE SHALL BE IDENTIFIED WITH LEGIBLE TAGS. CONTRACTOR TO PROVIDE COPIES OF DELIVERY TICKETS TO THE LANDSCAPE ARCHITECT AS VERIFICATION OF CORRECT SPECIES AND VARIETIES.
7. NOTIFY LANDSCAPE ARCHITECT OF INTENDED PLANTING SCHEDULE A MINIMUM OF TWO WEEKS PRIOR TO PLANTING.
8. SET OUT ALL PLANTS AS SHOWN ON PLAN. FINAL LOCATIONS TO BE APPROVED BY THE LANDSCAPE ARCHITECT PRIOR TO PLANTING.
9. PLANT CROWN TO BE 2" ABOVE ADJACENT GRADE FOR 15 GALLON AND LARGER PLANTS; 1" ABOVE ADJACENT GRADE OR PLANTS SMALLER THAN 15 GALLON. TREES TO BE PLANTED AT HEIGHT ABOVE ADJACENT GRADE AS DIRECTED BY LANDSCAPE ARCHITECT.
10. INSTALL ALL PLANTS PER DETAILS.
11. STAKE TREES ACCORDING TO INDUSTRY STANDARDS PER DETAILS. REVIEW WITH LANDSCAPE ARCHITECT PRIOR TO WORK.
12. ANY TREE SHOWN ON PLAN TO BE INSTALLED IN LESS THAN 8' (EIGHT FEET) CLEAR DISTANCE FROM ANY CURB, WALKWAY, OR FOUNDATION IS TO BE INSTALLED WITH ROOT CONTROL BARRIERS UB 18-2 BY DEEP ROOT CORP 800-458-7668. INSTALL AS DIRECTED BY DETAIL AND PER MANUFACTURER'S INSTRUCTIONS. PALM TREES DO NOT REQUIRE ROOT CONTROL BARRIERS. LANDSCAPE ARCHITECT MAY ALTER OR WAIVE REQUIREMENT.
13. COMPLETELY ERADICATE ALL BERMUDA, KIKUYU GRASS, AND OTHER WEED GROWTH OR OTHER VISIBLE OR ALLEGED INVASIVE WEEDS FROM AREAS WITHIN PROJECT LIMITS PRIOR TO INSTALLING PLANTING. INVASIVE WEEDS ARE IDENTIFIED BY THE CALIFORNIA INVASIVE PLANT COUNCIL, www.cal-ipc.org/.
14. PROVIDE AND INSTALL BARK MULCH OVER ALL SHRUB AND GROUNDCOVER AREAS. USE CEDAR WOOD BARK. SPREAD MULCH EVENLY OVER ALL SHRUB AND GROUNDCOVER AREAS TO A DEPTH OF 3" (THREE INCHES). KEEP MULCH AT LEAST 3" AWAY FROM THE BASES AND STEM OF PLANT. SUBMIT MULCH SAMPLES TO LANDSCAPE ARCHITECT FOR APPROVAL PRIOR TO PURCHASE AND DELIVERY.

Key	Botanical Name	Common Name	Size	Qty.	Height	Width	Location/Remarks
	TREE:						
ARB	ARBUTUS UNEDO	*Strawberry Tree*	36" Box	1	12-35'	20-35'	
CER	CERCIS CANADENSIS 'FOREST PANSY'	*Purple-leaved Eastern Redbud*	24" Box	3	12-20'	15-25'	
LAG	LAGERSTROEMIA INDICA 'CHEROKEE'	*Red Crape Myrtle*	24" Box	4	15-25'	10-20'	
OLE	OLEA EUROPAEA 'WILSONI'	*Fruitless Olive*	36" Box	2	25-30'	25-30'	
	SHRUB						
CIP	CISTUS X PURPUREUS	*Orchid Rockrose*	5 Gal	13	4'-6'	4'-6'	
CIS	CISTUS X SKANBERGII	*Pink Rockrose*	5 Gal	11	2-3'	2-3'	
GAL	GALVEZIA SPECIOSA 'BOCAROSA'	*Island Snapdragon*	5 Gal	22	3-4'	4-5'	
LEO	LEONOTIS LEONURUS	*Lion's Tail*	5 Gal	2	3-6'	4-6'	
PRU	PRUNUS ILICIFOLIA SPP LYONII	*Catalina Cherry*	5 Gal	9	15-25'	10-15'	
RHA	RHAMNUS CALIFORNIA 'EVE CASE'	*Coffeeberry*	5 Gal	9	6-8'	6-8'	
ROS2	ROSA 'ICEBURG'	*White Iceburg Shrub Rose*	5 Gal	5	3-4'	3-4'	
ROS	ROSA X 'NOATRAUM'	*Flower Carpet Pink Rose*	1 Gal	23	2'-3'	3'-4'	
SA4	SALVIA LEUCANTHA 'SANTA BARBARA'	*Santa Barbara Sage*	5 Gal	12	2'-3'	4-6'	
WEM	WESTRINGIA FRUTICOSA 'MORNING LIGHT'	*Morning Light Coast Rosemary*	5 Gal	11	3'-4'	3'-4'	
	PERENNIAL & GROUNDCOVER						
ACH	ACHILLEA MILLEFOLIUM	*Common Yarrow*	1 Gal	75	1'-3'	6"-18"	
DYM	DYMONDIA MARGARETAE	*Silver Carpet*	FLAT	262 SF	<1'	Spreading	
HEA	HELLEBORUS ARGUTIFOLIUS	*Corsican Hellebore*	1 Gal	35	2'-4'	2'-4'	
IRI	IRIS 'GRANDMA'S PURPLE FLAG'	*Tall Purple Bearded Iris*	1 Gal	16	1-2'	2-3'	
LIN	LIPPIA NODIFLORA (PHYLA NODIFLORA)	*Kurapia*	FLAT	570 SF	3"	6'	
LOL	LOBELIA LAXIFLORA	*Mexican Bush Lobelia*	1 Gal	45	1'-2'	4'-6'	
PEN	PENSTEMON 'FIREBIRD'	*Beard Tongue*	1 Gal	5	2-3'	2-3'	
W	WALDSTEINIA FREAGARIOIDES	*Barren Strawberry*	FLAT	19	3"-6"	6"-12"	
	GRASS / GRASS-LIKE						
FES	FESTUCA MUELLERI	*Mueller's Fescue*	1 Gal	34	<1'	Clumping	
LEY	LEYMUS CONDENSATUS 'CANYON PRINCE'	*Canyon Prince Wild Rye*	1 Gal	23	2-3'	Running	
	SUCCULENTS:						
AGA	AGAVE ATTENUATA 'NOVA'	*Blue Fox Tail Agave*	1 Gal	10	3-4'	3-4'	
CIJ	CISTANTHE GRANDIFLORA 'JAZZ TIME'	*Rock Purslane/ Calandirnia*	1 Gal	6	1'	2-3'	
HES	HESPERALOE PARVIFLORA	*Red Yucca*	1 Gal	5	3-4'	4-5'	
SEN	SENECIO CYLINDRICUS	*Narrow-Leaf Chalksticks*	1 Gal	23	1-2'	3-5'	

Richie-Bray, Inc.
LANDSCAPE ARCHITECTURE

904 Silver Spur Road #395
Rolling Hills Estates, CA 90274
(310) 377-5868

E-mail: deb@richie-bray.com

LICENSED LANDSCAPE ARCHITECT
DEBORAH RICHIE #4467
Signature
Renewal Date
Date
STATE OF CALIFORNIA

PROJECT TITLE

ROLLING HILLS
COMMUNITY
TENNIS COURTS

2 PORTUGUESE BEND ROAD
ROLLING HILLS, CA 90274

ASSESSOR'S ID NO.: 7569-015-900

SHEET TITLE

PLANT LIST

REVISIONS

06-27-2023

SCALE: N/A

DATE: 06-15-2023

DRAWN BY:

CHECKED:

XREF FILE:

PROJECT NO.

SHEET NO.

LP-2

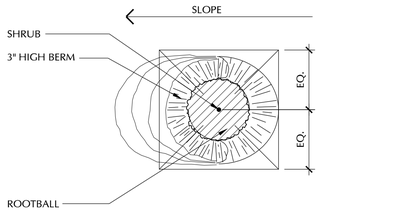

PLAN VIEW

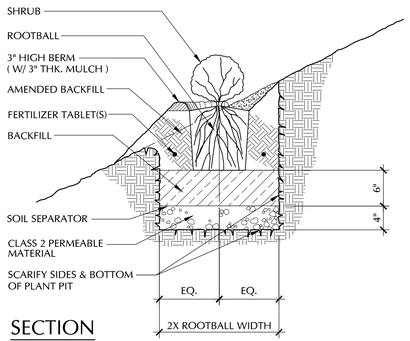

SECTION

SHRUB PLANTING ON SLOPE DETAIL 1" = 1'-0" 5

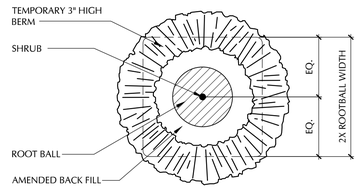

PLAN VIEW

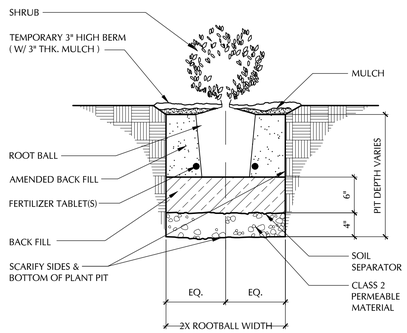

SECTION

SHRUB PLANTING DETAIL 1" = 1'-0" 3

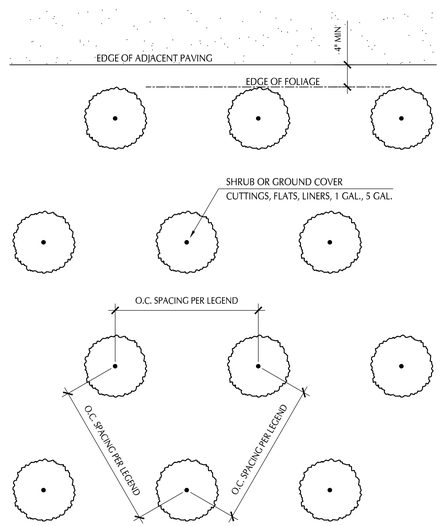

SHRUB PLANTING - LOCATION 1" = 1'-0" 4

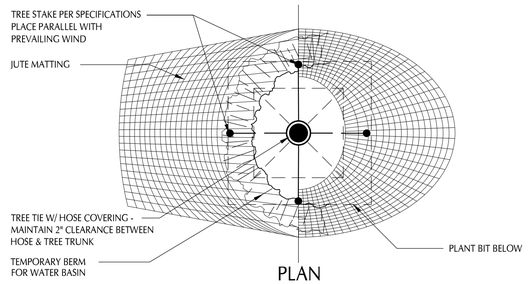

PLAN

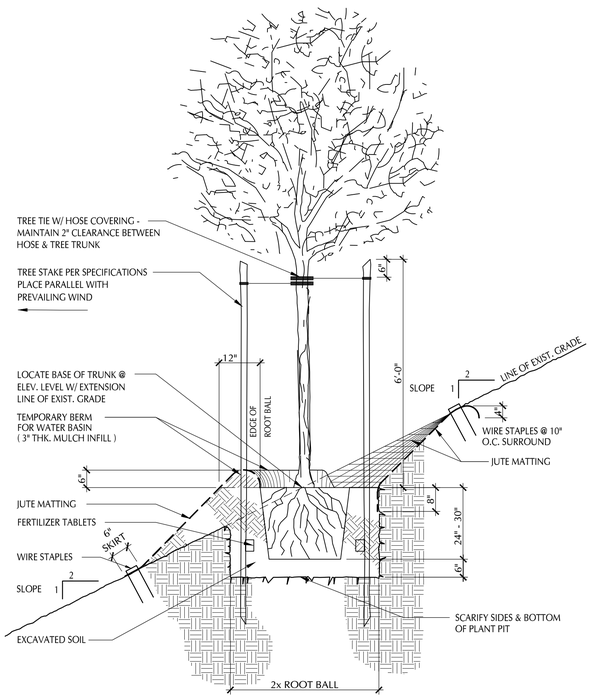

TREE PLANTING & STAKING ON SLOPE DETAIL 1/2" = 1'-0" 2

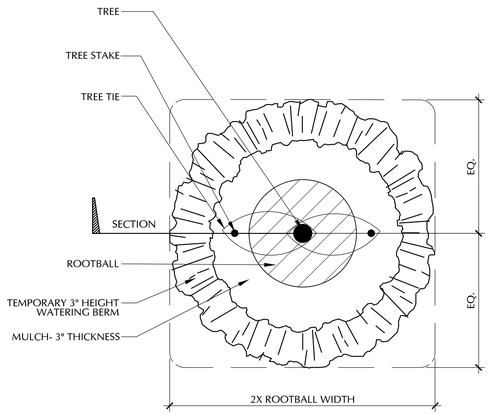

PLAN VIEW

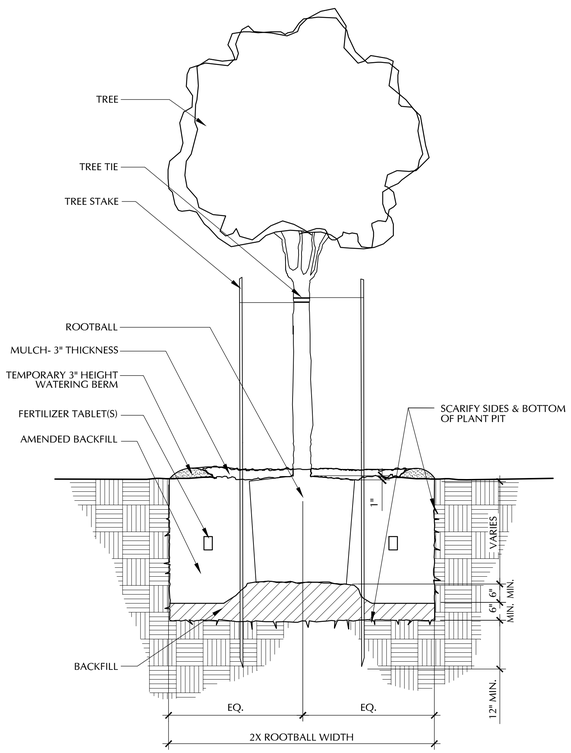

SECTION

TREE PLANTING & STAKING DETAIL 1/2" = 1'-0" 1

Richie-Bray, Inc.
LANDSCAPE ARCHITECTURE

904 Silver Spur Road #395
Rolling Hills Estates, CA 90274
(310) 377-5868

E-mail: deb@richie-bray.com

LICENSED LANDSCAPE ARCHITECT
DEBORAH RICHIE #4467
Signature
Renewal Date
Date
STATE OF CALIFORNIA

PROJECT TITLE

ROLLING HILLS COMMUNITY TENNIS COURTS

2 PORTUGUESE BEND ROAD
ROLLING HILLS, CA 90274

ASSESSOR'S ID NO.: 7569-015-900

SHEET TITLE

PLANTING DETAILS

REVISIONS

SCALE: NTS

DATE: 06-15-2023

DRAWN BY:

CHECKED:

XREF FILE:

PROJECT NO.

SHEET NO.

LP-3

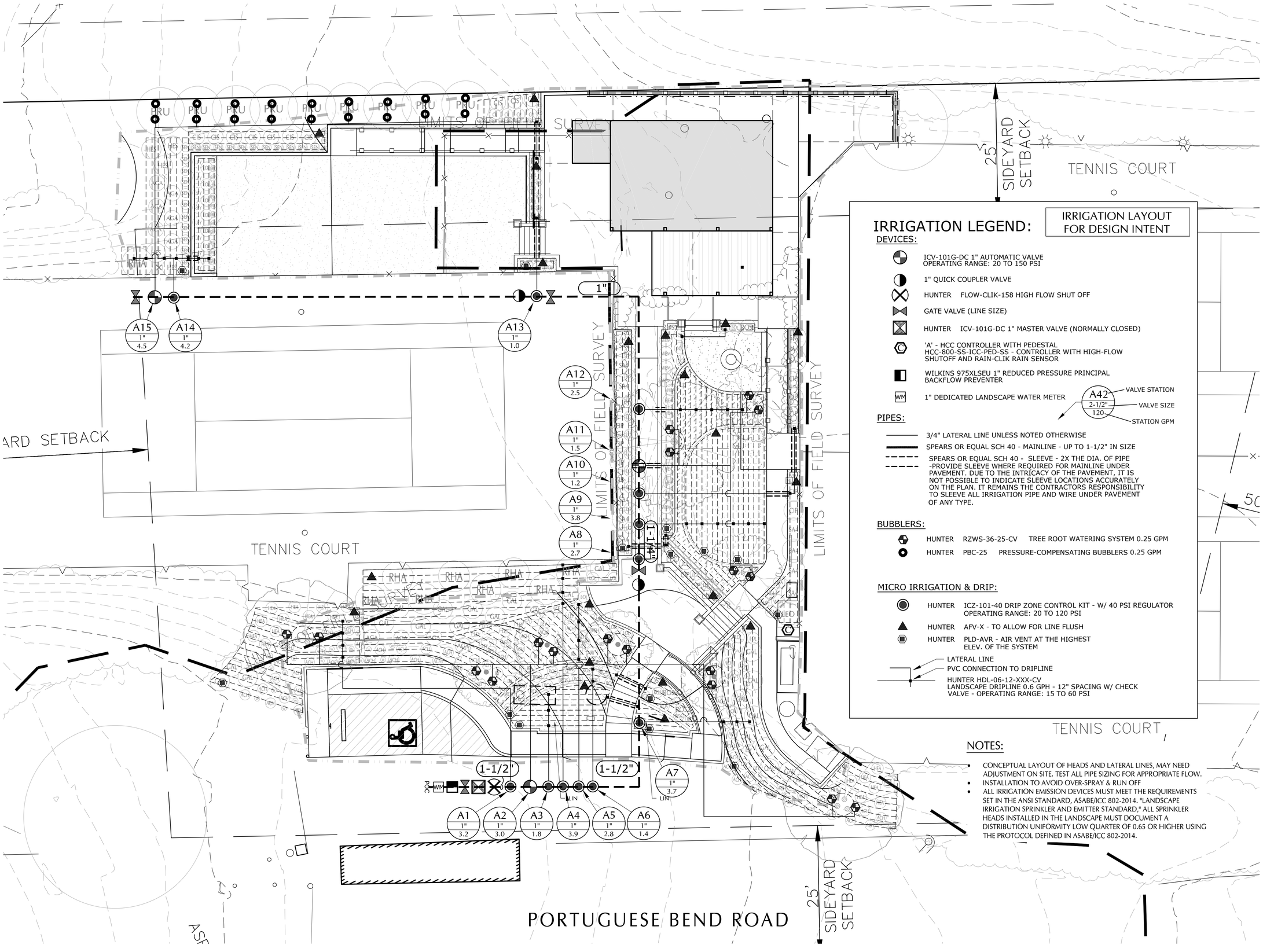

IRRIGATION LEGEND:

IRRIGATION LAYOUT FOR DESIGN INTENT

DEVICES:

- ICV-101G-DC 1" AUTOMATIC VALVE OPERATING RANGE: 20 TO 150 PSI
- 1" QUICK COUPLER VALVE
- HUNTER FLOW-CLIK-158 HIGH FLOW SHUT OFF
- GATE VALVE (LINE SIZE)
- HUNTER ICV-101G-DC 1" MASTER VALVE (NORMALLY CLOSED)
- 'A' - HCC CONTROLLER WITH PEDESTAL HCC-800-SS-ICC-PED-SS - CONTROLLER WITH HIGH-FLOW SHUTOFF AND RAIN-CLIK RAIN SENSOR
- WILKINS 975XLSEU 1" REDUCED PRESSURE PRINCIPAL BACKFLOW PREVENTER
- WM 1" DEDICATED LANDSCAPE WATER METER

A42 — 2-1/2" — 120
- A42: VALVE STATION
- 2-1/2": VALVE SIZE
- 120: STATION GPM

PIPES:

- 3/4" LATERAL LINE UNLESS NOTED OTHERWISE
- SPEARS OR EQUAL SCH 40 - MAINLINE - UP TO 1-1/2" IN SIZE
- SPEARS OR EQUAL SCH 40 - SLEEVE - 2X THE DIA. OF PIPE -PROVIDE SLEEVE WHERE REQUIRED FOR MAINLINE UNDER PAVEMENT. DUE TO THE INTRICACY OF THE PAVEMENT, IT IS NOT POSSIBLE TO INDICATE SLEEVE LOCATIONS ACCURATELY ON THE PLAN. IT REMAINS THE CONTRACTORS RESPONSIBILITY TO SLEEVE ALL IRRIGATION PIPE AND WIRE UNDER PAVEMENT OF ANY TYPE.

BUBBLERS:

- HUNTER RZWS-36-25-CV TREE ROOT WATERING SYSTEM 0.25 GPM
- HUNTER PBC-25 PRESSURE-COMPENSATING BUBBLERS 0.25 GPM

MICRO IRRIGATION & DRIP:

- HUNTER ICZ-101-40 DRIP ZONE CONTROL KIT - W/ 40 PSI REGULATOR OPERATING RANGE: 20 TO 120 PSI
- HUNTER AFV-X - TO ALLOW FOR LINE FLUSH
- HUNTER PLD-AVR - AIR VENT AT THE HIGHEST ELEV. OF THE SYSTEM

LATERAL LINE
PVC CONNECTION TO DRIPLINE
HUNTER HDL-06-12-XXX-CV
LANDSCAPE DRIPLINE 0.6 GPH - 12" SPACING W/ CHECK VALVE - OPERATING RANGE: 15 TO 60 PSI

NOTES:

- CONCEPTUAL LAYOUT OF HEADS AND LATERAL LINES, MAY NEED ADJUSTMENT ON SITE. TEST ALL PIPE SIZING FOR APPROPRIATE FLOW.
- INSTALLATION TO AVOID OVER-SPRAY & RUN OFF
- ALL IRRIGATION EMISSION DEVICES MUST MEET THE REQUIREMENTS SET IN THE ANSI STANDARD, ASABE/ICC 802-2014. "LANDSCAPE IRRIGATION SPRINKLER AND EMITTER STANDARD," ALL SPRINKLER HEADS INSTALLED IN THE LANDSCAPE MUST DOCUMENT A DISTRIBUTION UNIFORMITY LOW QUARTER OF 0.65 OR HIGHER USING THE PROTOCOL DEFINED IN ASABE/ICC 802-2014.

Richie-Bray, Inc.
LANDSCAPE ARCHITECTURE

904 Silver Spur Road #395
Rolling Hills Estates, CA 90274
(310) 377-5868

E-mail: deb@richie-bray.com

LICENSED LANDSCAPE ARCHITECT
DEBORAH RICHIE #4467
Signature
Renewal Date
Date
STATE OF CALIFORNIA

PROJECT TITLE

ROLLING HILLS COMMUNITY TENNIS COURTS

2 PORTUGUESE BEND ROAD
ROLLING HILLS, CA 90274

ASSESSOR'S ID NO.: 7569-015-900

SHEET TITLE

IRRIGATION PLAN

REVISIONS

SCALE: 1/8" = 1'-0"

DATE: 06-15-2023

DRAWN BY:

CHECKED:

XREF FILE:

PROJECT NO.

SHEET NO.

LI-1

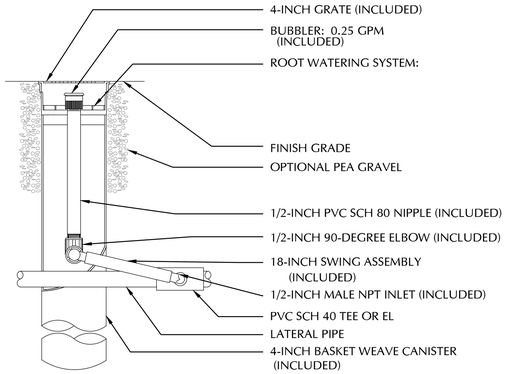

7 LI-2 TREE BUBBLER

NOT TO SCALE

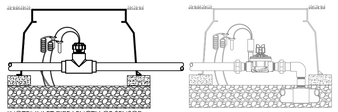

NOTE INLET PIPE LENGTH OF SENSOR MUST BE MIN. 10X PIPE DIA. STRAIGHT, CLEAN RUN OF PIPE, NO FITTINGS OR TURNS. OUTLET PIPE LENGTH OF SENSOR MUST BE MIN. 5X PIPE DIA. OF STRAIGTH CLEAN RUN OF PIPE, NO FITTINGS OR TURNS.

FCT FITTING SELECTION

FCT100	1 INCH	SCH. 40
FCT150	1.5 INCH	SCH. 40
FCT158	1.5 INCH	SCH. 80
FCT200	2 INCH	SCH. 40
FCT208	2 INCH	SCH. 80
FCT300	3 INCH	SCH. 40
FCT308	3 INCH	SCH. 80
FCT400	4 INCH	SCH. 40

4 LI-2 FLOW-CLIK HIGH FLOW SHUT OFF

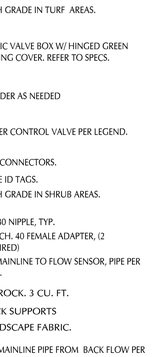

1 LI-2 MASTER VALVE INSTALLATION

NOT TO SCALE

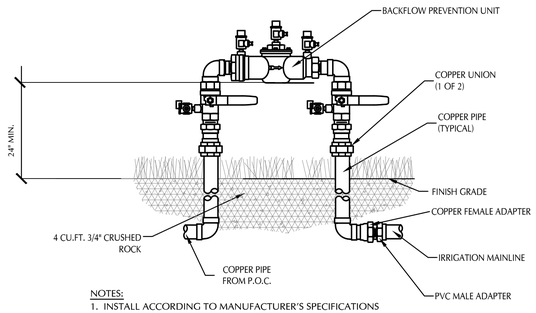

NOTES:
1. INSTALL ACCORDING TO MANUFACTURER'S SPECIFICATIONS
2. INSTALL BACKFLOW PREVENTER AS REQUIRED BY LOCAL CODES AND HEALTH DEPARTMENT.
3. VERIFY LOCAL REQUIREMENTS PRIOR TO INSTALLATION.
4. CONTRACTOR TO PRICE COMPLETE INSTALLATION UNLESS OTHERWISE INFORMED.

5 LI-2 BACKFLOW PREVENTER

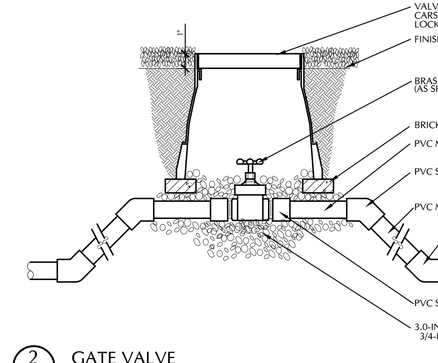

2 LI-2 GATE VALVE

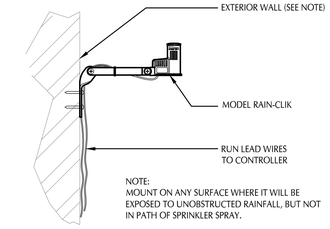

NOTE:
MOUNT ON ANY SURFACE WHERE IT WILL BE EXPOSED TO UNOBSTRUCTED RAINFALL, BUT NOT IN PATH OF SPRINKLER SPRAY.

WALL MOUNT SENSOR

NOT TO SCALE

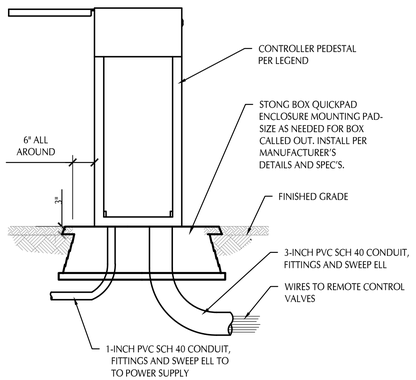

8 LI-2 PEDESTAL CONTROLLER WITH RAIN-CLIK

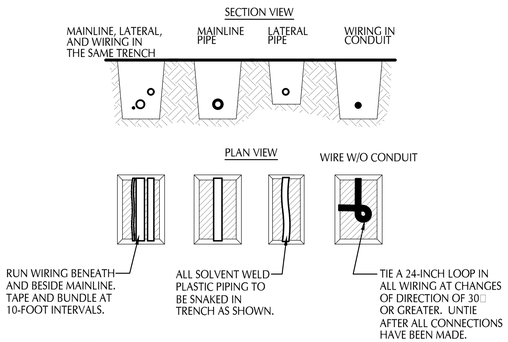

NOTES:
1. SLEEVE BELOW ALL HARDSCAPE ELEMENTS WITH SCH. 40 PVC TWICE THE DIAMETER OF THE PIPE OR WIRE BUNDLE WITHIN.
2. FOR PIPE AND WIRE BURIAL DEPTHS SEE SPECIFICATIONS.

6 LI-2 TRENCH DETAIL

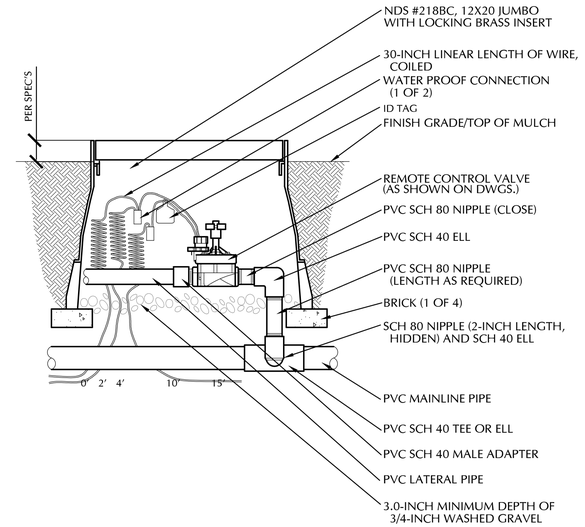

3 LI-2 REMOTE CONTROL VALVE

NOT TO SCALE

Richie-Bray, Inc.
LANDSCAPE ARCHITECTURE

904 Silver Spur Road #395
Rolling Hills Estates, CA 90274
(310) 377-5868

E-mail: deb@richie-bray.com

LICENSED LANDSCAPE ARCHITECT
DEBORAH RICHIE #4407
Signature
Renewal Date
Date
STATE OF CALIFORNIA

PROJECT TITLE

ROLLING HILLS COMMUNITY TENNIS COURTS

2 PORTUGUESE BEND ROAD
ROLLING HILLS, CA 90274

ASSESSOR'S ID NO.: 7569-015-900

SHEET TITLE

IRRIGATION DETAILS

REVISIONS

SCALE: NTS

DATE: 06-15-2023

DRAWN BY:

CHECKED:

XREF FILE:

PROJECT NO.

SHEET NO.

LI-2

GENERAL IRRIGATION NOTES:

1. THIS PROJECT UTILIZES THE EXISTING POTABLE WATER (PW) SYSTEM.

2. SPRINKLER SYSTEM DESIGN IS BASED ON MINIMUM OPERATING PRESSURE AND MAXIMUM FLOW DEMAND INDICATED ON DRAWINGS. VERIFY WATER PRESSURE PRIOR TO CONSTRUCTION. REPORT DIFFERENCES BETWEEN WATER PRESSURE INDICATED ON DRAWINGS AND ACTUAL PRESSURE READING AT IRRIGATION POINT-OF-CONNECTION TO LANDSCAPE ARCHITECT. IF PRESSURE DIFFERENCES ARE NOT REPORTED PRIOR TO START OF CONSTRUCTION, ANY REVISIONS NECESSARY ARE CONTRACTOR'S RESPONSIBILITY.

3. THIS DESIGN IS DIAGRAMMATIC. PIPING, VALVES, ETC. SHOWN WITHIN PAVED AREAS ARE FOR DESIGN CLARIFICATION ONLY. INSTALL IRRIGATION PIPING AND EQUIPMENT IN PLANTING AREAS WHERE POSSIBLE. AVOID CONFLICTS BETWEEN SPRINKLER SYSTEM, PLANTING AND ARCHITECTURAL FEATURES.

4. FLUSH AND ADJUST SPRINKLER HEADS FOR OPTIMUM PERFORMANCE AND TO PREVENT OVER-SPRAY INTO NEIGHBORING PROPERTIES OR ARCHITECTURAL ELEMENTS. SELECT BEST DEGREE OF ARC TO FIT SITE CONDITIONS AND THROTTLE FLOW CONTROL AT CONTROL VALVE TO OBTAIN OPTIMUM PRESSURE FOR EACH SYSTEM.

5. DO NOT WILLFULLY INSTALL SPRINKLER SYSTEM AS INDICATED ON DRAWINGS WHEN IT IS OBVIOUS THAT OBSTRUCTIONS, GRADE DIFFERENCES OR DIFFERENCES IN AREA DIMENSIONS EXIST THAT MIGHT NOT HAVE BEEN CONSIDERED DURING DESIGN. NOTIFY LANDSCAPE ARCHITECT OF SUCH OBSTRUCTIONS OR DIFFERENCES.

6. INSTALL PIPE MATERIALS AND EQUIPMENT AS INDICATED ON DRAWINGS. USE TEFLON TAPE ON PVC MALE PIPE THREADS ON SPRINKLER SWING JOINT AND VALVE ASSEMBLIES. DO NOT USE PIPE DOPE ON PVC THREADED PIPING OR TO ATTACH HEADS TO SWING JOINTS.

7. SET SPRINKLER HEADS PERPENDICULAR TO FINISH GRADE OF THE IRRIGATED AREAS UNLESS OTHERWISE INDICATED ON DRAWINGS.

8. IRRIGATION SHALL BE SCHEDULED TO OPERATE ONLY WITHIN TIME WINDOWS THAT DO NOT CREATE EXCESS RUN-OFF. USE MULTIPLE START TIMES OF SHORT DURATIONS TO CYCLE THROUGH THE REQUIRED APPLICATIONS.

9. RUNNING MULTIPLE VALVES AT THE SAME TIME IS ALLOWED. DO NOT EXCEED THE 22 GPM MAXIMUM AT ANY ONE TIME.

10. IRRIGATION. ALL NEW OR ALTERED IRRIGATION SYSTEMS PROPOSED AS PART OF A NEW DEVELOPMENT SHALL INCORPORATE THE FOLLOWING REQUIREMENTS IN THEIR DESIGN, INSTALLATION AND MAINTENANCE:
    - 10.1. IRRIGATION SYSTEMS SHALL BE DESIGNED AND INSTALLED TO AVOID OVERSPRAY AND RUNOFF INTO PUBLIC STREETS. VALVES SHALL BE SEPARATED FOR INDIVIDUAL HYDROZONES BASED ON PLANT WATER NEEDS AND SUN OR SHADE REQUIREMENTS.
    - 10.2. WATER BUDGET CALCULATIONS SHALL BE SHOWN ON IRRIGATION PLANS.
    - 10.3. AN AUTOMATIC IRRIGATION SYSTEM IS REQUIRED AND SHALL INCLUDE A WEATHER-BASED IRRIGATION CONTROLLER, INCLUDING A RAIN SHUTOFF SENSOR.
    - 10.4. AREAS LESS THAN EIGHT FEET WIDE SHALL BE IRRIGATED WITH APPROPRIATELY SELECTED EQUIPMENT THAT PROVIDES THE PROPER AMOUNT OF WATER COVERAGE WITHOUT CAUSING OVERSPRAY ONTO ADJACENT SURFACES.
    - 10.5. ALL SPRINKLERS SHALL HAVE MATCHED PRECIPITATION RATES WITHIN EACH VALVE AND CIRCUIT. ALL IRRIGATION SYSTEMS SHALL BE DESIGNED TO INCLUDE OPTIMUM DISTRIBUTION UNIFORMITY, HEAD TO HEAD SPACING, AND SETBACKS FROM WALKWAYS AND PAVEMENT.
    - 10.6. ALL IRRIGATION SYSTEMS SHALL PROVIDE CHECK VALVES AT THE LOW END OF IRRIGATION LINES TO PREVENT UNWANTED DRAINING OF IRRIGATION LINES.
    - 10.7. PRESSURE REGULATORS MAY BE REQUIRED ON THE IRRIGATION SYSTEM AS DETERMINED BY THE DIRECTOR. (ORD. 700 § 2 (EXH. 1), 2012; ORD. 695 § 3, 2010)

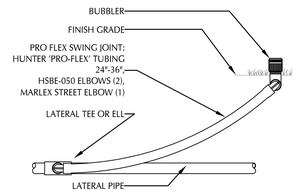

4 LI-3 BUBBLER NOZZLES

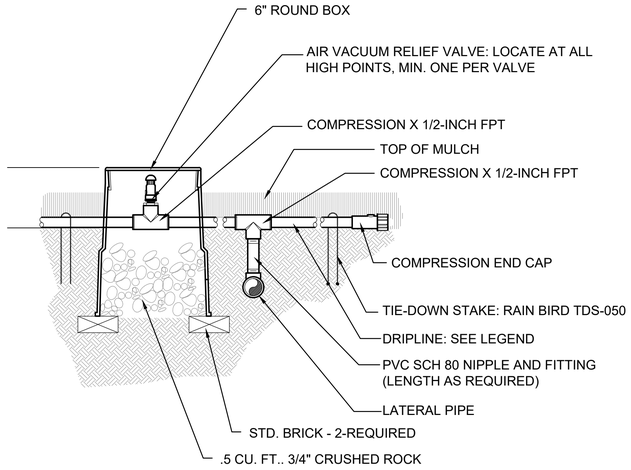

1 LI-3 SURFACE-MOUNTED DRIP COMPONENTS

NOT TO SCALE

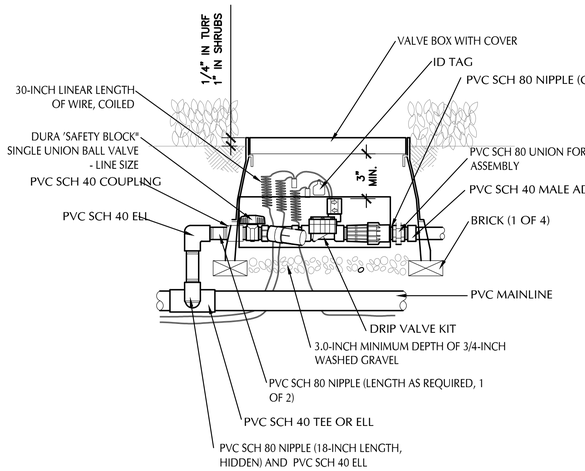

2 LI-3 DRIP REMOTE CONTROL VALVE

NOT TO SCALE

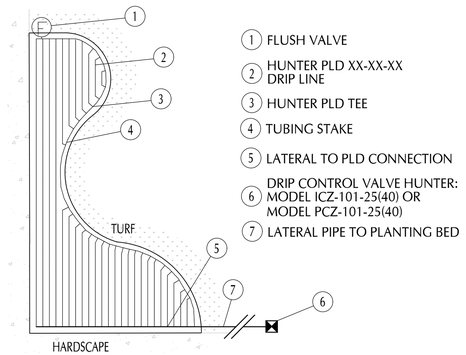

3 LI-3 TYPICAL PLANTING BED

NOT TO SCALE

Richie-Bray, Inc.
LANDSCAPE ARCHITECTURE

904 Silver Spur Road #395
Rolling Hills Estates, CA 90274
(310) 377-5868

E-mail: deb@richie-bray.com

LICENSED LANDSCAPE ARCHITECT
DEBORAH RICHIE #4407
Signature
Renewal Date
Date
STATE OF CALIFORNIA

PROJECT TITLE

ROLLING HILLS COMMUNITY TENNIS COURTS

2 PORTUGUESE BEND ROAD
ROLLING HILLS, CA 90274

ASSESSOR'S ID NO.: 7569-015-900

SHEET TITLE

IRRIGATION DETAILS

REVISIONS

SCALE: NTS

DATE: 06-15-2023

DRAWN BY:

CHECKED:

XREF FILE:

PROJECT NO.

SHEET NO.

LI-3

PART 1 GENERAL

1.1 SECTION INCLUDES
A. IRRIGATION SYSTEM TO SUPPORT PLANT MATERIAL.
1.2 RELATED SECTIONS
A. SECTION 02950 - TREES, PLANTS, AND GROUND COVERS: COORDINATION OF PLANTING.
1.3 REFERENCES
A. ASTM D 2235 - SOLVENT CEMENT FOR ACRYLONITRILE - BUTADIENE - STYRENE (ABS) PLASTIC PIPE AND FITTINGS.
B. ASTM D 2241 - POLY (VINYL CHLORIDE) (PVC) PLASTIC PIPE (SDR-PR).
C. ASTM D 2282 - ACRYLONITRILE-BUTADIENE-STYRENE (ABS) PLASTIC PIPE (SDR-PR).
D. ASTM D 2564 - SOLVENT CEMENT FOR POLY (VINYL CHLORIDE) (PVC) PLASTIC PIPE AND FITTINGS.
1.4 SYSTEM DESCRIPTION
A. AUTOMATIC CONTROLLERS OPERATE IRRIGATION VALVES. ELECTRIC SOLENOID CONTROLLED UNDERGROUND POP-UP SPRINKLER SYSTEM.
B. SOURCE POWER: 120 VOLT, 15A, SINGLE PHASE.
C. LOW VOLTAGE CONTROLS: 24 VOLT, 5A.
D. WATER SOURCE: CITY SUPPLIED POTABLE WATER (PW) SUPPLY SYSTEM.
1.5 SUBMITTALS
A. FURNISH THE ARTICLES, EQUIPMENT, MATERIALS, OR PROCESSES SPECIFIED BY NAME INDICATED IN DRAWINGS AND THIS SECTION.
B. SUBMIT A COMPLETE MATERIAL LIST PRIOR TO PERFORMING WORK. INCLUDE WITH MATERIAL LIST MANUFACTURER, MODEL NUMBER AND DESCRIPTION OF MATERIALS AND EQUIPMENT TO BE USED. ALTHOUGH MANUFACTURER AND OTHER INFORMATION MAY BE DIFFERENT, THE FOLLOWING IS A GUIDE TO PROPER SUBMITTAL FORMAT:

ITEM	DESCRIPTION	MANUFACTURER	MODEL NO.
1.	GATE VALVE	NIBCO	T-136

C. IRRIGATION SUBMITTAL LIST MUST BE SPECIFIC AND COMPLETE. ITEMS MUST BE LISTED AND INCLUDE SOLVENT/PRIMER, WIRE, WIRE CONNECTORS, VALVE BOXES, ETC. NO COPIES OF MANUFACTURER'S CATALOG CUTS ARE REQUIRED AS SUBMITTAL INFORMATION, THOUGH THEY MAY BE USED.
D. EQUIPMENT OR MATERIALS INSTALLED OR FURNISHED WITHOUT PRIOR APPROVAL OF OWNER MAY BE REJECTED.
E. APPROVAL OF ITEMS, ALTERNATE OR SUBSTITUTES, INDICATES ONLY THAT PRODUCT OR PRODUCTS APPARENTLY MEET REQUIREMENTS OF THE DRAWINGS AND THIS SECTION ON BASIS OF INFORMATION OR SAMPLES SUBMITTED.
F. MANUFACTURER'S WARRANTIES DO NOT RELIEVE CONTRACTOR'S LIABILITY UNDER WARRANTY. SUCH WARRANTIES ONLY SUPPLEMENT WARRANTY.
G. PROJECT RECORD DRAWINGS:
1. PROVIDE AND KEEP UP TO DATE, COMPLETE SET OF PROJECT RECORD DOCUMENTS, CORRECTED DAILY, TO SHOW CHANGES FROM DOCUMENTS AND THIS SECTION. INDICATE EXACT INSTALLED LOCATIONS, SIZES, AND KINDS OF EQUIPMENT. PRINTS FOR PREPARATION OF PROJECT RECORD DOCUMENTS MAY BE OBTAINED FROM OWNER AT CONTRACTOR'S COST.
2. PROJECT RECORD DOCUMENTS TO BE FULL SIZED DRAWINGS, 24 BY 36-INCHES, AND INCLUDE THE PHRASE "PROJECT RECORD DRAWINGS" IN TITLE BLOCK.
3. MAKE NEAT AND LEGIBLE NOTATIONS ON PROJECT RECORD DOCUMENTS OF WORK INSTALLED ON A DAILY BASIS. FOR EXAMPLE, SHOULD A PIECE OF EQUIPMENT BE INSTALLED IN A LOCATION THAT DOES NOT MATCH DRAWINGS, INDICATE THAT EQUIPMENT HAS BEEN RELOCATED IN A GRAPHIC MANNER SO AS TO MATCH ORIGINAL IRRIGATION SYMBOLS INDICATED ON DRAWINGS. TRANSFER RELOCATED EQUIPMENT AND DIMENSIONS TO PROJECT RECORD DOCUMENTS.
4. DIMENSION FROM TWO PERMANENT POINTS OF REFERENCE, BUILDING CORNERS, OR EDGE OF WALKWAY INTERSECTIONS, THE LOCATION OF THE FOLLOWING ITEMS AS THEY EXIST ON SITE:
A. CONNECTION TO WATER LINES.
B. CONNECTION TO EXISTING ELECTRICAL POWER.
C. GATE VALVES.
D. ROUTING OF PRESSURE MAIN LINE PIPING (DIMENSION MAXIMUM 100-FEET ALONG ROUTING).
E. ELECTRIC CONTROL VALVES.
F. ROUTING OF CONTROL WIRING.
G. CONTROL WIRE CONDUIT.
H. QUICK COUPLING VALVES.
I. AUTOMATIC CONTROLLERS.
J. SLEEVING UNDER PAVING.
H. IRRIGATION CONTROLLER CHARTS:
1. PREPARE IRRIGATION CONTROLLER CHARTS FROM CONTRACTOR-PROVIDED PROJECT RECORD DOCUMENTS. OBTAIN OWNER'S APPROVAL OF PROJECT RECORD DOCUMENTS PRIOR TO PREPARING IRRIGATION CONTROLLER CHARTS.
2. PROVIDE ONE IRRIGATION CONTROLLER CHART FOR EACH IRRIGATION CONTROLLER INSTALLED ON PROJECT.
3. INDICATE ON EACH IRRIGATION CONTROLLER CHART, VIA COLORED PENCIL, AREA CONTROLLED BY THAT AUTOMATIC IRRIGATION CONTROLLER. PROVIDE A DIFFERENT AND DISTINCT COLOR FOR EACH VALVE ZONE.
4. IRRIGATION CONTROLLER CHART FORMAT: 11 X 17-INCH BOND REDUCED FROM APPROVED CADD GENERATED PROJECT RECORD DOCUMENTS.
5. OBTAIN OWNER'S APPROVAL OF COLORED IRRIGATION CONTROLLER CHARTS PRIOR TO HERMETICALLY SEALING CHARTS BETWEEN TWO PIECES OF 5 MIL PLASTIC LAMINATE.
6. ONE COLORED HERMETICALLY SEALED IRRIGATION CONTROLLER CHART SHALL BE SECURELY PLACED WITHIN THE CONTROLLER CABINET, AND ONE COLORED NON-HERMETICALLY SEALED IRRIGATION CONTROLLER CHART SHALL BE PROVIDED TO THE OWNER.
1.6 QUALITY ASSURANCE
A. MANUFACTURER: COMPANY SPECIALIZING IN MANUFACTURING PRODUCTS SPECIFIED IN THIS SECTION WITH A MINIMUM OF 5 YEARS OF DOCUMENTED EXPERIENCE.
B. CONTRACTOR: COMPANY SPECIALIZING IN PERFORMING WORK OF THIS SECTION WITH A MINIMUM OF 5 YEARS OF DOCUMENTED EXPERIENCE.
C. MANUFACTURER'S DIRECTIONS:
1. FOLLOW MANUFACTURER'S DIRECTIONS AND DRAWINGS WHERE MANUFACTURERS OF PRODUCTS USED IN THIS SECTION. FURNISH DIRECTIONS COVERING INSTALLATION POINTS NOT SHOWN IN DRAWINGS AND THIS SECTION.
2. NOTIFY OWNER OF CONFLICTING MANUFACTURER DIRECTIONS PROVIDED WITH PRODUCTS PRIOR TO INSTALLATION.
D. EXPLANATION OF DRAWINGS:
1. DUE TO SCALE OF DRAWINGS IT IS NOT POSSIBLE TO INDICATE EVERY OFFSET, FITTING, AND SLEEVE WHICH ARE REQUIRED. CAREFULLY INVESTIGATE EXISTING SITE CONDITIONS AFFECTING WORK: ACCORDINGLY, FURNISHING SUCH FITTINGS, ETC. AS MAY BE REQUIRED TO MEET SUCH CONDITIONS.
2. DRAWINGS ARE DIAGRAMMATIC ONLY AND ARE INDICATIVE OF WORK TO BE INSTALLED. INSTALL WORK IN SUCH A MANNER AS TO AVOID CONFLICTS BETWEEN IRRIGATION SYSTEMS, PLANTING, AND ARCHITECTURAL FEATURES.
3. FURNISH AND INSTALL WORK CALLED FOR ON DRAWING NOTES AND DETAILS WHETHER OR NOT SPECIFICALLY MENTIONED IN THIS SECTION.
4. DO NOT WILLFULLY INSTALL IRRIGATION SYSTEM AS INDICATED ON DRAWINGS WHEN IT IS OBVIOUS IN FIELD THAT OBSTRUCTIONS, GRADE DIFFERENCES OR DISCREPANCIES IN AREA DIMENSIONS EXIST THAT MIGHT NOT HAVE BEEN CONSIDERED DURING DESIGN. BRING OBSTRUCTIONS OR DIFFERENCES TO OWNER'S ATTENTION. IN EVENT THIS NOTIFICATION IS NOT PERFORMED, CONTRACTOR IS TO ASSUME FULL RESPONSIBILITY FOR REVISIONS.
E. CORRECT DISCREPANCIES OF UNSATISFACTORY WORK. COMPLETE CORRECTION OF WORK WITHIN A REASONABLE PERIOD MUTUALLY AGREED UPON BETWEEN OWNER AND CONTRACTOR.
F. OWNER RESERVES THE RIGHT TO SUBSTITUTE, ADD, DELETE ANY MATERIAL OR WORK AS WORK PROGRESSES. IF DEEMED NECESSARY BY OWNER, NEGOTIATIONS AND ADJUSTMENTS TO CONTRACT PRICE, CREDITS AND DEDUCTIONS TO CONTRACT SUM WILL OCCUR ACCORDING TO UNIT PRICES PROVIDED IN PROPOSAL.

1.7 PRODUCT DELIVERY, STORAGE, AND HANDLING
A. HANDLING OF PVC PIPE AND FITTINGS:
1. EXERCISE CARE IN HANDLING, LOADING, UNLOADING, AND STORING OF PVC PIPE AND FITTINGS. TRANSPORT PVC PIPE IN A VEHICLE WHICH ALLOWS PIPE TO LIE FLAT SO AS NOT TO SUBJECT IT TO UNDUE BENDING NOR CONCENTRATED EXTERNAL LOAD AT ANY POINT. DISCARD DAMAGED SECTIONS OF PIPE AND PROVIDE NEW PIPE.
1.8 REGULATORY REQUIREMENTS
A. CONFORM TO UNIFORM PLUMBING CODE FOR PIPING AND COMPONENT REQUIREMENTS.
B. PROVIDE CERTIFICATE OF COMPLIANCE FROM AUTHORITY HAVING JURISDICTION INDICATING APPROVAL OF PRODUCTS IN SYSTEM.
C. PRODUCTS REQUIRING ELECTRICAL CONNECTION: PROVIDE WORK AND MATERIALS IN ACCORDANCE WITH LATEST EDITION OF NATIONAL ELECTRIC CODE.
D. FURNISH SATISFACTORY EVIDENCE TO OWNER DOCUMENTING WORK INSTALLED COMPLIES WITH ORDINANCE AND CODE REQUIREMENTS.
1.9 PROTECTION OF WORK AND MATERIALS
A. PROTECT WORK AND THE WORK OF OTHER TRADES FOR THE DURATION OF PROJECT. PROTECT PIPES AND FITTINGS FROM DIRECT SUNLIGHT, AND AVOID UNDUE BENDING AND CONCENTRATED EXTERNAL LOADING. DO NOT USE DAMAGED PIPE OR FITTINGS.
B. EXERCISE EXTREME CARE IN EXCAVATING AND WORKING NEAR EXISTING UTILITIES. REPAIR DAMAGE TO UTILITIES, IF INCURRED DURING COURSE OF WORK.
C. TAKE NECESSARY PRECAUTIONS TO PROTECT ADJACENT MATERIALS. SHOULD DAMAGE BE INCURRED TO SUCH MATERIALS, REPAIR DAMAGE TO THEIR ORIGINAL CONDITION.
1.10 PREINSTALLATION MEETING
A. CONVENE 1 WEEK BEFORE STARTING WORK SPECIFIED IN THIS SECTION.
1.11 EXTRA MATERIALS
A. SUPPLY AS A PART OF WORK, THE FOLLOWING ITEMS:
1. TWO SETS OF SPECIAL TOOLS REQUIRED FOR REMOVING, DISASSEMBLING, AND ADJUSTING EACH TYPE OF SPRINKLER AND VALVE SUPPLIED.
2. ONE 5-FOOT METAL VALVE KEY FOR OPERATION OF GATE VALVES.
3. TWO KEYS FOR EACH AUTOMATIC CONTROLLER.
4. TWO QUICK COUPLER KEYS AND MATCHING HOSE SWIVEL.
B. SUBMIT ABOVE MENTIONED EQUIPMENT TO OWNER UPON REQUEST.
1.12 COORDINATION
A. IN ACCORDANCE WITH SECTION 01041 - PROJECT COORDINATION.
B. TO ENSURE THAT ELEMENTS DESCRIBED IN THIS SECTION ARE SENSITIVELY LOCATED, PRELIMINARILY LOCATE THE FOLLOWING ELEMENTS, INCLUDING BUT NOT LIMITED TO: AUTOMATIC CONTROLLERS, BACKFLOW PREVENTERS, ELECTRIC CONTROL VALVES, GATE VALVES, AND QUICK COUPLER VALVES.
C. LOCATE EACH ITEM IN FIELD BY INSTALLING A 2 X 2 X 30-INCH WOOD STAKE WITH INDELIBLE BLACK INK ON TOP OF STAKE IDENTIFYING EFFECTED ELEMENT. ONCE STAKED, OWNER, WITH CONTRACTOR'S CONCURRENCE, WILL REVIEW AND MAKE MINOR ADJUSTMENTS, IF NECESSARY. ONCE ELEMENT LOCATIONS ARE APPROVED BY OWNER, INSTALL ACTUAL ELEMENTS.

PART 2 PRODUCTS

2.1 PIPE MATERIALS

A. USE ONLY NEW MATERIALS OF BRANDS AND TYPES AS INDICATED ON DRAWINGS AND SPECIFIED IN THIS SECTION.

B. PVC PRESSURE MAIN LINE PIPING AND FITTINGS: THIS PROJECT USES AN EXISTING MAINLINE. THE INFORMATION BELOW PERTAINS TO ANY ADDITIONAL MAINLINE REQUIRED TO COMPLETE THE PROJECT.

1. PRESSURE ON-GRADE MAIN LINE PIPING: PVC SCH. 40 WITH SOLVENT-WELDED JOINTS.
A. MADE FROM NSF APPROVED, TYPE I, GRADE II PVC COMPOUND CONFORMING TO ASTM D 1785. MEET REQUIREMENTS SET FORTH IN FEDERAL SPECIFICATION PS-21-70 WITH AN APPROPRIATE STANDARD DIMENSION RATIO.
2. PVC SOLVENT-WELD FITTINGS: SCHEDULE 40, 1-2, II-I NSF APPROVED CONFORMING TO ASTM TEST PROCEDURE D2466.
A. PVC FITTINGS MUST BEAR MANUFACTURER'S NAME OR TRADEMARK, MATERIAL DESIGNATION, SIZE, APPLICABLE IPS SCHEDULE, AND NSF SEAL OF APPROVAL.
B. ACCEPTABLE MANUFACTURERS:
1) PW EAGLE SOLARBLOK.
2) LASCO.
3. PVC PIPING MUST BEAR FOLLOWING MARKINGS:
A. MANUFACTURER'S NAME.
B. NOMINAL PIPE SIZE.
C. SCHEDULE OR CLASS.
D. PRESSURE RATING IN POUNDS PER SQUARE INCH, (PSI).
E. NSF (NATIONAL SANITATION FOUNDATION) APPROVAL.
F. DATE OF EXTRUSION.

C. PVC NON-PRESSURE LATERAL LINE PIPING:
1. NON-PRESSURE ON-GRADE LATERAL LINE PIPING: PVC- SCH. 40 WITH SOLVENT-WELDED JOINTS.
A. MADE FROM NSF APPROVED, TYPE I, GRADE II PVC COMPOUND CONFORMING TO ASTM D 1785. MEET REQUIREMENTS SET FORTH IN FEDERAL SPECIFICATION PS-21-70 WITH AN APPROPRIATE STANDARD DIMENSION RATIO.
2. NON-PRESSURE LATERAL LINE PIPING INSTALLED UNDER PAVED AREAS: PVC SCHEDULE 40 WITH SOLVENT-WELDED JOINTS.
3. REQUIREMENTS FOR NON-PRESSURE LATERAL LINE PIPE AND FITTINGS ARE SAME FOR SOLVENT-WELD PRESSURE MAIN LINE PIPE AND FITTINGS AS SET FORTH IN THIS SECTION, EXCEPT THAT THEY MUST BE PVC.

D. PVC PIPE CEMENT AND PRIMER:
1. SOLVENT CEMENT AND PRIMER FOR PVC SOLVENT-WELD PIPING AND FITTINGS.
A. INSTALLATION METHODS AS RECOMMENDED BY PIPING MANUFACTURER.
B. ACCEPTABLE MANUFACTURERS:
1) T. CHRISTY ENTERPRISES; RED HOT BLUE GLUE.
2. SOLVENT CEMENT AND PRIMER FOR SOLVENT-WELD PVC FLEXIBLE HOSE AND PVC FITTINGS.
A. ACCEPTABLE MANUFACTURERS:
1. IPS; MODEL #795 (CLEAR) GLUE.

E. GALVANIZED PIPE FITTINGS (IF ADDED TO THE PROJECT):
1. WHERE INDICATED ON DRAWINGS, USE GALVANIZED STEEL PIPE ASA SCHEDULE 40 MILD STEEL SCREWED PIPE.
2. FITTINGS: MEDIUM GALVANIZED SCREWED BEADED MALLEABLE IRON, OR CLASS 150 FLANGED STEEL WITH STAINLESS STEEL BOLTS, AS REQUIRED. GALVANIZED COUPLINGS MAY BE MERCHANT COUPLING.
3. GALVANIZED PIPE AND FITTINGS INSTALLED BELOW GRADE PER EITHER ONE OF THE FOLLOWING METHODS:
A. PAINT WITH TWO COATS OF BITUMASTIC.
1) ACCEPTABLE MANUFACTURERS:
(A) KOPPERS CORPORATION; KOPPERS #50.
B. WRAP PIPING WITH TWO LAYERS OF PLASTIC, SELF-ADHESIVE, PIPE WRAP, 2 MIL THICK.
1) ACCEPTABLE MANUFACTURERS:
(A) 3M COMPANY.
4. USE NON-HARDENING, NONTOXIC PIPE JOINT SEALANT FORMULATED FOR USE ON WATER-CARRYING PIPES FOR METAL THREADED CONNECTIONS.

2.2 GATE VALVES (2-INCH DIAMETER AND SMALLER) (IF ADDED TO THE PROJECT)
A. PRESSURE-RATED AT 200 PSI IN FULL COMPLIANCE WITH AWWA C 550 AND C 509.
B. BODY CONSTRUCTED OF CAST IRON, BRONZE STEM, DUCTILE IRON WEDGE ENCAPSULATED WITH NITRILE RUBBER, FUSION BONDED EPOXY COATING, 2-INCH OPERATING NUT, AND 125 LB. THREADED ENDS IN ACCORDANCE WITH ANSI/AWWA B16.1, CLASS 125.
C. ACCEPTABLE MANUFACTURERS:
1. NIBCO T-113; LINE SIZE.

2.3 QUICK COUPLING VALVES AND VALVE KEYS (IF ADDED TO THE PROJECT)
A. QUICK COUPLING VALVES: BRASS ONE-PIECE BODY, STAINLESS STEEL INTERNAL VALVE SPRING, 3/4-INCH SIZE WITH YELLOW THERMOPLASTIC RUBBER COVER.
1. ACCEPTABLE MANUFACTURERS:
A. HUNTER: MODEL #HQ-33DLRC.
B. QUICK COUPLING VALVE KEYS. 3/4-INCH SIZE WITH THREADED BRASS SWIVEL ELL FOR 3/4-INCH HOSE CONNECTION.
1. ACCEPTABLE MANUFACTURERS:
A. HUNTER; MODEL #HK-33 AND HS-0 SWIVEL HOSE ELL.
2.4 CONTROL WIRING
A. PROVIDE WIRE CONDUCTORS BETWEEN AUTOMATIC CONTROLLERS AND ELECTRIC CONTROL VALVES WITH DIRECT BURIAL COPPER WIRE AWG-UF 600 VOLT.
B. INSTALL WIRES IN ACCORDANCE WITH THE VALVE MANUFACTURER'S SPECIFICATIONS AND WIRE SIZING CHARTS.
C. DO NOT USE WIRE SMALLER THAN #14 GAUGE FOR CONTROL WIRES.
D. PROVIDE ONE COMMON WIRE AND ONE CONTROL WIRE FOR EACH ELECTRIC CONTROL VALVE. DO NOT INSTALL MULTIPLE VALVES ON A SINGLE CONTROL WIRE.
E. MULTIPLE CONTROLLERS WITH ONE COMMON WIRE WILL NOT BE PERMITTED.
F. INSTALL WIRING TO OCCUPY SAME TRENCH ALONG SAME ROUTE AS PRESSURE MAIN LINE OR LATERAL LINE PIPING WHEREVER POSSIBLE.
1. WHEN CONTROL WIRE DOES NOT RUN IN MAIN LINE TRENCH, INSTALL WIRE WITHIN SCHEDULE 40 PVC CONDUIT.
2. WHEN MORE THAN ONE WIRE IS PLACED IN A TRENCH, TAPE WIRES TOGETHER AT INTERVALS OF NO MORE THAN 12-FEET.
3. PROVIDE A 2-FOOT LENGTH OF EXCESS WIRE IN AN 8-INCH DIAMETER LOOP AT EACH 90 DEGREE CHANGE OF DIRECTION, AT BOTH ENDS OF SLEEVES, AND AT 100-FOOT INTERVALS ALONG CONTINUOUS RUNS OF WIRING. DO NOT TIE WIRING LOOP.
4. LAY CONTROL WIRES LOOSELY IN TRENCH WITHOUT STRESS OR STRETCHING OF CONTROL WIRE CONDUCTORS.
G. WIRE EXPANSION CURLS:
1. PROVIDE WITHIN 3-FEET OF EACH WIRE CONNECTION.
2. PROVIDE SUFFICIENT LENGTH AT EACH SPLICE CONNECTION TO EACH ELECTRIC CONTROL, SO THAT IN CASE OF REPAIR, VALVE BONNET CAN BE BROUGHT TO SURFACE WITHOUT DISCONNECTING CONTROL WIRES.
H. WIRE SPLICES:
1. PROVIDE WATERPROOF "ONE-STEP" WIRE CONNECTORS MANUFACTURED BY KING TECHNOLOGY. USE ONE SPLICE PER CONNECTOR SEALING PACK.
2. DO NOT INSTALL FIELD WIRE SPLICES BETWEEN AUTOMATIC IRRIGATION CONTROLLER AND ELECTRICAL CONTROL VALVES.
3. PROVIDE A 24-INCH LOOPED COIL ON FIELD WIRE SPLICES AND PLACE LOOPED COIL WITHIN A ROUND PLASTIC VALVE BOX, HEAT-BRANDED WITH 2-INCH HIGH LETTERS STATING THE PHRASE "WS".
I. WIRE COLOR: CONTINUOUS OVER ITS ENTIRE LENGTH. USE SAME COLOR OF WIRE IDENTIFIED FOR EACH AUTOMATIC CONTROLLER AS FOLLOWS.
1. CONTROL WIRE: SOLID RED FOR EACH AUTOMATIC CONTROLLER.
2. COMMON WIRE: SOLID WHITE FOR EACH AUTOMATIC CONTROLLER.
3. SPARE CONTROL WIRE: SOLID BLACK.
4. SPARE COMMON WIRE: SOLID WHITE WITH BLACK STRIPING.
J. SPARE WIRES:
1. PROVIDE ONE SPARE WIRE GROUP AT LAST ELECTRIC CONTROL VALVES AS INDICATED ON DRAWINGS.
2. SPARE WIRE GROUP: PROVIDE TWO SPARE CONTROL WIRES AND ONE SPARE COMMON WIRE.
3. IDENTIFY WITHIN CONTROLLER PEDESTAL, STATION NUMBERS OF EACH SPARE CONTROL WIRE WITH PLASTIC TAG.
K. LOW VOLTAGE CONTROL WIRE CONDUIT PULL BOXES:
1. PROVIDE A CONDUIT PULL BOX AT EACH END OF CONTROL WIRE CONDUIT AT INSTALLATIONS LONGER THAN 20-FEET IN LENGTH.
2. LOCATE PULL BOXES IN PLANTING AREAS WITH 6-INCH CLEARANCE FROM BACK OF CURB.
2.5 IRRIGATION CONTROLLERS
A. IRRIGATION CONTROLLERS:
1. IRRIGATION CONTROLLERS: CONNECT TO THE EXISTING WEATHER TRAK.
B. OBTAIN APPROVAL BY OWNER FOR FINAL LOCATION OF IRRIGATION CONTROLLERS.

2.6 ELECTRIC CONTROL VALVES
A. HUNTER ICV SERIES AUTOMATIC VALVE, GLASS REINFORCED NYLON BODY. SIZE AS INDICATED ON DRAWINGS:
1. 1-INCH SIZE: MODEL #101G - 1"
B. DRIP VALVE ASSEMBLY, HUNTER ICZ-101-40.
1. 1-INCH SIZE: ICV VALVE WITH 1" HY100 WYE FILTER AND 40 PSI REGULATOR
C. WEATHER TRAK - WT2W-SVD-11 STAION DECODER.
D. WEATHER TRAK - WTSW-LSP SURGE PROTECTOR. INSTALL ONE PER EVERY FIVE DECODERS OR AT THE END OF A WIRE RUN WITH 5/8" BY 8' LONG COPPER GROUND ROD.
2.7 PLASTIC IDENTIFICATION TAGS
A. TAGS ARE MADE TO ORDER WITH HOT STAMPED BLACK LETTERS ON YELLOW BACKGROUND. PROVIDE ONE TAG EACH FOR FOLLOWING EQUIPMENT:
1. ELECTRIC CONTROL VALVES: NUMBERED TO MATCH VALVE STATIONING AS INDICATED ON DRAWINGS.
B. ACCEPTABLE MANUFACTURERS:
1. T. CHRISTY ENTERPRISES (714) 771-4142.
2.8 VALVE BOXES
A. ROUND PLASTIC VALVE BOXES (IN PLANTING AREAS ONLY): SIZED PER DETAIL, GREEN COLOR.
1. ACCEPTABLE MANUFACTURERS:
A. CARSON-BROOKS PRODUCTS, INC.; MODEL #910-4B, AND
B. NDS, INC.; MODEL 107 EBC 7" ROUND EMITTER BOX.
2. PROVIDE ROUND PLASTIC VALVE BOXES FOR THE FOLLOWING EQUIPMENT:
A. GATE VALVES.
B. QUICK COUPLING VALVES.
B. RECTANGULAR PLASTIC VALVE BOXES (IN PLANTING AREAS ONLY): 11 3/4-INCH WIDE X 17-INCH LONG X 12-INCH DEEP WITH BOLT-DOWN HINGED COVER, GREEN COLOR.
1. ACCEPTABLE MANUFACTURERS:
A. NDS PRODUCTS, INC.; MODEL #218BC.
2. PROVIDE VALVE BOXES FOR FOLLOWING EQUIPMENT:
A. ELECTRIC CONTROL VALVES.
B. WIRE SPLICES, OR SPARE WIRES.
C. ALL VALVE BOXES ARE TO BE HEAT BRANDED WITH AN ABBREVIATED DESCRIPTION OF THE VALVE TYPE. USE A MIN. 2" LETTERS, AND DUPLICATE THE THE ABBREVIATION USE ALREADY ESTABLISHED ON SITE.
2.9 SPRINKLER HEADS
A. SPRINKLER NOZZLE:MP ROTATOR - NOZZLE PER DRAWING.
1. ACCEPTABLE MANUFACTURERS:
A. HUNTER MP2000 SERIES - 6" POP-UP MOUNT WITH BUILT-IN CHECK VALVE.
B. HUNTER PROS - 06 PRS30-CV SERIES POP-UP MOUNT WITH BUILT-IN CHECK VALVE.
C. HUNTER RZWS-36-25-CV 36" DEEP ROOT WATERING SYSTEM

Richie-Bray, Inc.
LANDSCAPE ARCHITECTURE
904 Silver Spur Road #395
Rolling Hills Estates, CA 90274
(310) 377-5868
E-mail: deb@richie-bray.com

LICENSED LANDSCAPE ARCHITECT
DEBORAH RICHIE #4407
Signature
Renewal Date
Date
STATE OF CALIFORNIA

PROJECT TITLE

ROLLING HILLS
COMMUNITY
TENNIS COURTS

2 PORTUGUESE BEND ROAD
ROLLING HILLS, CA 90274

ASSESSOR'S ID NO.: 7569-015-900

SHEET TITLE

IRRIGATION
SPECIFICATION

REVISIONS

SCALE: N/A

DATE: 06-15-2023

DRAWN BY:

CHECKED:

XREF FILE:

PROJECT NO.

SHEET NO.

LI-4

2.10 DRIP IRRIGATION

A. INSTALL VALVE ASSEMBLY, AIR RELIEF VALVE, FLUSH CAP AND DRIP TUBING IN THE APPROXIMATE LOCATIONS AND LAYOUT AS SHOWN ON THE DRAWINGS. FIELD ADJUSTMENT WILL BE NECESSARY TO PROVIDE PROPER COVERAGE. ON GRADE DRIPLINE TO BE SPACED 16" O.C.

1. ACCEPTABLE MANUFACTURERS:
   A. HUNTER ICZ-101-40
   B. HUNTER PLD-AVR - AIR VENT
   C. HUNTER PLD CAP - TO ALLOW FOR LINE FLUSH
   D. HUNTER PLD-06-12-XXX PRESSURE COMPENSATING DRIP LINE - 0.6 GPH @ 12" O.C.

2.11 BACKFLOW PREVENTION

A. THIS PROJECT UTILIZES THE EXISTING BACKFLOW PREVENTER OR WILKINS 975XLSEU.

2.12 SLEEVING

A. INSTALL SLEEVES BENEATH PAVED AREAS TO ROUTE MAIN LINE, LATERAL PIPE, AND CONTROL WIRING BUNDLES. EXTEND SLEEVE PIPE A MINIMUM OF 12-INCHES, AND A MAXIMUM OF 24-INCHES, BEYOND PAVING EDGES OR CURB FACES. PROVIDE PVC CAPS AT EACH SLEEVE END. PROVIDE SLEEVING FOR FLOW SENSOR WIRING.

B. SLEEVING MATERIALS:

1. PEDESTRIAN RATED PAVING: PVC SCHEDULE 40 PIPE WITH SOLVENT-WELDED JOINTS.
2. VEHICULAR RATED PAVING: PVC SCHEDULE 40 PIPE WITH SOLVENT-WELDED JOINTS.

C. SLEEVING SIZE: EQUAL TO TWICE THAT OF MAIN LINE OR LATERAL PIPE OR WIRING BUNDLE BEING SERVED.

D. SLEEVE LOCATION: IDENTIFY LOCATION ON "PROJECT RECORD DRAWINGS".

2.13 ACCESSORIES

A. TOOLS AND SPARE PARTS: PROVIDE OPERATING KEYS, SERVICING TOOLS, TEST EQUIPMENT, OTHER ITEMS, AND SPARE PARTS AS DESCRIBED IN THIS SECTION.

B. MISCELLANEOUS MATERIALS: PROVIDE OTHER MATERIALS OR EQUIPMENT NOT SHOWN ON DRAWINGS OR REFERENCED IN THIS SECTION AS NECESSARY TO COMPLETE INSTALLATION OF IRRIGATION SYSTEM.

PART 3 EXECUTION

3.1 EXAMINATION

A. VERIFY LOCATION OF EXISTING UTILITIES.

B. VERIFY THAT REQUIRED UTILITIES ARE AVAILABLE, IN PROPER LOCATION, AND READY FOR USE.

C. PIPING LAYOUT AS INDICATED ON DRAWINGS IS DIAGRAMMATIC ONLY. ROUTE PIPING TO AVOID PLANT MATERIAL, STRUCTURES, FACILITIES, AND UTILITIES.

D. LAYOUT AND STAKE LOCATIONS OF IRRIGATION SYSTEM COMPONENTS.

E. REVIEW LAYOUT REQUIREMENTS WITH OTHER AFFECTED WORK. COORDINATE LOCATIONS OF PVC SLEEVES UNDER PAVING.

3.2 OBSERVATION

A. SITE CONDITIONS:

1. SCALED DIMENSIONS ARE APPROXIMATE. CHECK AND VERIFY SIZE DIMENSIONS AND SECURE OWNER'S APPROVAL PRIOR TO PROCEEDING WITH WORK.
2. LOCATE WITH 2X2X24-INCH WOOD STAKES WITH IDENTIFYING MARKINGS FOR PROPOSED LOCATIONS OF ELECTRICAL CONTROL VALVE BOXES, GATE VALVE BOXES, MASTER VALVE BOXES, FLOW SENSOR BOXES AND QUICK COUPLER BOXES FOR APPROVAL BY OWNER. AFTER LOCATING ITEMS, NOTIFY OWNER FOR REVIEW AND APPROVAL. MAKE MINOR ADJUSTMENTS TO STAKE LOCATIONS AS REQUESTED BY OWNER.
3. EXERCISE EXTREME CARE IN EXCAVATING AND WORKING NEAR UTILITIES. REPAIR DAMAGE WHEN INCURRED.
4. COORDINATE INSTALLATION OF SPRINKLER IRRIGATION MATERIALS, INCLUDING PIPING, FOR INTERFERENCE OR CONFLICTS WITH UTILITIES, CONSTRUCTION ELEMENTS, AND PLANTING.
5. VERIFY FINISH GRADES OF PLANTER AREAS PRIOR TO STARTING WORK.
6. REPORT IRREGULARITIES TO OWNER PRIOR TO BEGINNING WORK. BEGINNING OF WORK IMPLIES ACCEPTANCE OF EXISTING CONDITIONS.

3.3 SITE PREPARATION

A. LAYOUT:

1. PRIOR TO INSTALLATION OF PIPING, STAKE OUT PRESSURE AND NON-PRESSURE SUPPLY LINES AND LOCATIONS OF SPRINKLER HEADS. NOTIFY OWNER FOR REVIEW AND APPROVAL OF PIPING LAYOUT.

B. WATER SUPPLY POINT-OF-CONNECTION HOOK-UP:

1. PROVIDE WATER SUPPLY POINT-OF-CONNECTION AT LOCATIONS INDICATED ON DRAWINGS.
2. ACCOMMODATE MINOR ADJUSTMENTS TO PIPING DUE TO ACTUAL SITE CONDITIONS.

C. LINE VOLTAGE ELECTRICAL SUPPLY CONNECTION HOOK-UP:

1. PROVIDE ELECTRICAL CONNECTION FROM EXISTING LINE VOLTAGE ELECTRICAL SUPPLY TO IRRIGATION CONTROLLER LOCATIONS INDICATED ON DRAWINGS.
2. ACCOMMODATE ELECTRICAL CONNECTION ADJUSTMENTS DUE TO ACTUAL SITE CONDITIONS.

3.4 TRENCHING AND BACKFILLING

A. TRENCHING:

1. DIG TRENCHES STRAIGHT AND SUPPORT PIPE CONTINUOUSLY ON BOTTOM OF TRENCH. LAY PIPE TO AN EVEN GRADE. TRENCHING EXCAVATION TO FOLLOW LAYOUT AS INDICATED ON DRAWINGS.
2. PROVIDE THE FOLLOWING MINIMUM SOIL COVER:
   A. 3-INCH AND SMALLER PRESSURE PVC PIPE: 18-INCHES.
   B. NON-PRESSURE PVC PIPE: 12-INCHES.
   C. CONTROL WIRE: 18-INCHES.
   D. TOP OF FINISHED SURFACE TO TOP OF SLEEVING INSTALLED UNDER PAVING: 36-INCHES.
3. WHEN PIPING IS INDICATED UNDER PAVING AND IS ROUTED PARALLEL AND ADJACENT TO PLANTING AREAS, INSTALL PIPING IN PLANTING AREAS.
4. DO NOT EXCEED DESIGNED IRRIGATION HEAD SPACING AS INDICATED ON DRAWINGS.
5. ACCOMMODATE GRADE CHANGES IN TRENCHES.
6. KEEP TRENCHES FREE OF DEBRIS AND OBSTRUCTIONS THAT COULD DAMAGE PIPE.
7. APPLY TEFLON TAPE ON THREADED PVC TO PVC AND THREADED PVC TO METAL JOINTS. APPLY LIGHT WRENCH PRESSURE ONLY. WHERE THREADED PVC CONNECTIONS ARE REQUIRED, USE THREADED PVC ADAPTERS INTO WHICH PIPE MAY BE SOLVENT WELDED.

B. ASSEMBLING PIPE AND FITTINGS:

1. INSPECT PIPE AND FITTINGS BEFORE INSTALLATION.
2. KEEP PIPE FREE FROM DIRT AND PIPE SCALE. CUT PIPE ENDS SQUARE AND DEBUR PIPE EDGES.
3. KEEP ENDS OF ASSEMBLED PIPE CAPPED. REMOVE CAPS ONLY WHEN NECESSARY TO CONTINUE ASSEMBLY.
4. INSTALL PIPE WITH IDENTIFICATION MARKINGS FACE UP FOR VISUAL INSPECTION AND VERIFICATION.

C. IRRIGATION PIPING CLEARANCE:

1. PROVIDE A MINIMUM CLEARANCE OF 6-INCHES BETWEEN IRRIGATION PIPING AND PIPING OF OTHER TRADES.
2. DO NOT INSTALL PARALLEL PIPELINES DIRECTLY OVER ONE ANOTHER.

D. AUTOMATIC CONTROLLER INSTALLATION:

1. THIS PROJECT UTILIZES AN EXISTING CONTROLLER.

F. PLASTIC IDENTIFICATION TAGS:

1. CONNECT IDENTIFICATION TAGS TO CONDUCTOR WIRES WITH BLACK OR WHITE NYLON "TIE-LOCK" FASTENERS.
2. LOCATE IDENTIFICATION TAGS FACING UPWARD.

G. GATE VALVE INSTALLATION (IF ADDED TO THE PROJECT):

1. LOCATE AND INSTALL GATE VALVES AS INDICATED ON DRAWINGS.
2. GATE VALVE BOXES LOCATED IN PLANTING AREAS: INSTALL 6-INCHES AWAY AND PERPENDICULAR FROM BACK OF CURB OR PAVED EDGES.
3. CONSULT OWNER FOR METHOD OF IDENTIFICATION OF GATE VALVE BOXES.

H. QUICK COUPLING VALVE INSTALLATION (IF ADDED TO THE PROJECT):

1. LOCATE AND INSTALL QUICK COUPLING VALVES AS INDICATED ON DRAWINGS.
2. PLACE QUICK COUPLING VALVE BOXES A MINIMUM OF 6-INCHES FROM BACK OF CURB OR PAVED EDGES.
3. PROVIDE 24-INCHES CLEARANCE FROM EDGE OF QUICK COUPLING VALVE BOX TO ADJACENT VALVE BOXES.

I. SYSTEM FLUSHING:

1. AFTER PIPE LINES AND RISERS ARE IN PLACE AND CONNECTED, NECESSARY DIVERSION WORK HAS BEEN COMPLETED, AND PRIOR TO INSTALLATION OF SPRINKLER HEADS, OPEN CONTROL VALVES WITH FULL HEAD OF WATER TO FLUSH OUT SYSTEM.
2. INSTALL SPRINKLER HEADS AFTER FLUSHING OF SYSTEM HAS BEEN PERFORMED.

J. SPRINKLER HEAD INSTALLATION:

1. INSTALL SPRINKLER HEADS AS INDICATED ON DRAWINGS.
2. DO NOT EXCEED DESIGN SPACING OF SPRINKLER HEADS.

K. SLEEVING:

1. ALLOW 6-FEET OF CLEARANCE AT SLEEVE ENDS FOR FUTURE ACCESS TO SLEEVE. ROUTE CONTROL WIRES AND CABLE THROUGH SLEEVES AND TIE AT EACH END TO WOOD IDENTIFICATION STAKES.
2. PROVIDE SLEEVING FOR CONTROL WIRING UNDER PAVING REGARDLESS IF DRAWINGS DO NOT INDICATE SPECIFIC LOCATIONS.
3. LOCATE SLEEVING ENDS WITH 1-INCH DIAMETER BLUE SPRAY PAINT "DOTS" AT PAVING EDGE.

L. BACKFILLING:

1. DO NOT BACKFILL TRENCHES UNTIL REQUIRED TESTS ARE PERFORMED. CAREFULLY BACKFILL TRENCHES WITH EXCAVATED MATERIALS APPROVED FOR BACKFILLING, CONSISTING OF EARTH, LOAM, SANDY CLAY, OR SAND, FREE FROM LARGE CLODS OF EARTH, STONES OR DEBRIS.
2. MECHANICALLY COMPACT BACKFILLED TRENCHES TO DRY DENSITY EQUAL TO ADJACENT UNDISTURBED SOIL. CONFORM BACKFILL TO ADJACENT GRADES WITHOUT DIPS, SUNKEN AREAS, HUMPS OR OTHER SURFACE IRREGULARITIES.
3. PLACE FINE GRANULAR MATERIAL BACKFILL OVER PIPES.
4. DO NOT FLOOD TRENCHES.
5. MAKE ADJUSTMENTS IF TRENCH SETTLEMENT OCCURS AND PROVIDE NECESSARY ADJUSTMENTS, AS NECESSARY, TO PIPE, VALVES, SPRINKLER HEADS, PLANTING, OR OTHER CONSTRUCTION ELEMENTS.

M. TRENCHING AND BACKFILLING UNDER PAVING:

1. BACKFILL TRENCHES LOCATED UNDER PAVING WITH SAND, 6-INCHES BELOW PIPE AND 3-INCHES ABOVE PIPE.
2. COMPACT TRENCHES TO 95% RELATIVE COMPACTION, USING MANUAL OR MECHANICAL TAMPING DEVICES.
3. LEAVE TRENCHES FLUSH WITH ADJOINING FINISH GRADE.
4. SET IN PLACE, CAP AND PRESSURE TEST PIPING UNDER PAVING PRIOR TO BEGINNING PAVING WORK.
5. IF REQUIRED, INSTALL PIPING UNDER EXISTING PAVING BY JACKING, BORING OR HYDRAULIC DRIVING. WHEN CUTTING OR BREAKING OF CONCRETE IS NECESSARY, REPAIR OR REPLACE, AS NECESSARY. OBTAIN OWNER'S APPROVAL TO CUT OR BREAK PAVING. NO HYDRAULIC DRIVING WILL BE PERMITTED UNDER PAVING.
6. PROVIDE MINIMUM SAND COVER OF 18-INCHES BETWEEN TOP OF PIPE AND BOTTOM OF PAVING SUB-BASE FOR PRESSURE AND NON-PRESSURE PIPING INSTALLED UNDER PAVING.

3.5 INSTALLATION

A. ASSEMBLIES:

1. ROUTING OF IRRIGATION LINES AS INDICATED ON DRAWINGS IS DIAGRAMMATIC ONLY. INSTALL LINES AND VARIOUS ASSEMBLIES IN SUCH MANNER AS TO CONFORM WITH DRAWINGS.
2. INSTALL MULTIPLE ASSEMBLIES IN PLASTIC LINES. PROVIDE EACH ASSEMBLY WITH ITS OWN OUTLET.
3. INSTALL ASSEMBLIES SPECIFIED HEREIN AND IN ACCORDANCE WITH DRAWINGS.
4. REMOVE DIRT AND DEBRIS FROM PVC PIPE AND FITTINGS PRIOR TO ENERGIZING IRRIGATION SYSTEM.

3.6 FIELD QUALITY CONTROL

A. ADJUSTMENT OF IRRIGATION SYSTEM:

1. ADJUST SPRINKLER HEADS FOR OPTIMUM PERFORMANCE AND TO REDUCE OVER-SPRAY ONTO PAVED AREAS AND FACILITIES.
2. PERFORM ADJUSTMENTS TO SPRINKLER HEADS TO PROVIDE OPTIMUM COVERAGE PRIOR TO INSTALLING PLANT MATERIAL. ADJUSTMENTS MAY ALSO INCLUDE CHANGES IN NOZZLE SIZES AND INSTALLING PRESSURE REDUCING SCREENS (PCS) OF APPROPRIATE SIZE.
3. INSTALL SPRINKLER HEADS PERPENDICULAR TO FINISH GRADE.

B. IRRIGATION SYSTEM TESTING:

1. PROVIDE HYDROSTATIC TESTS ON PRESSURE MAINLINE PIPING ONLY IN PRESENCE OF OWNER. DO NOT BACKFILL MAINLINE PIPE UNTIL PRESSURE READINGS HAVE BEEN OBSERVED AND APPROVED BY OWNER.
2. NOTIFY OWNER AT LEAST 48 HOURS IN ADVANCE OF HYDROSTATIC MAINLINE TESTING.
3. TEST PRESSURE MAINLINE UNDER HYDROSTATIC PRESSURE OF 150 PSI FOR A PERIOD OF AT LEAST 2 HOURS. OBTAIN OWNER'S APPROVAL OF HYDROSTATIC MAINLINE TESTING PRIOR TO INSTALLING ELECTRIC CONTROL VALVES.
4. PERFORM HYDROSTATIC PRESSURE TESTING ON NON-PRESSURE LATERAL PIPING LOCATED UNDER PAVED AREAS UNDER A HYDROSTATIC PRESSURE OF 150 PSI FOR A PERIOD OF AT LEAST 2 HOURS.
5. IF DURING A HYDROSTATIC PRESSURE TEST, A PRESSURE DROP IS OBSERVED, INDICATING A LEAK, REPLACE FAULTY FITTINGS OR PIPE AND REPEAT HYDROSTATIC PRESSURE TEST UNTIL ENTIRE MAINLINE SYSTEM IS PROVEN WATERTIGHT AND APPROVED BY OWNER.
6. FURNISH NECESSARY FORCE PUMP AND RELATED EQUIPMENT FOR HYDROSTATIC MAINLINE PRESSURE TEST.
7. WHEN HYDROSTATIC MAINLINE PRESSURE TEST IS APPROVED BY OWNER, PERFORM A SPRINKLER COVERAGE TEST IN PRESENCE OF OWNER. PROVIDE THE FOLLOWING:
   A. DETERMINE IF WATER COVERAGE IS COMPLETE AND ADEQUATE.
   B. FURNISH MATERIALS AND PERFORM WORK NECESSARY TO CORRECT INADEQUACIES OF WATER COVERAGE DUE TO DEVIATIONS FROM DRAWINGS, OR WHERE IRRIGATION SYSTEM HAS BEEN WILLFULLY INSTALLED AS INDICATED ON DRAWINGS WHEN IT IS OBVIOUSLY INADEQUATE, WITHOUT BRINGING THIS TO ATTENTION OF OWNER.
   C. PERFORM TESTING PRIOR TO INSTALLING PLANT MATERIAL.
8. UPON COMPLETION OF EACH PHASE OF WORK, TEST FOR COVERAGE OF ENTIRE SPRINKLER SYSTEM AND ADJUST TO MEET SPECIFIC SITE REQUIREMENTS PRIOR TO OWNER'S REVIEW.

3.7 DEMONSTRATION AND INSTRUCTIONS

A. INSTRUCT OWNER'S MAINTENANCE PERSONNEL IN PROPER OPERATION AND MAINTENANCE OF IRRIGATION SYSTEM.

B. USE OPERATION AND MAINTENANCE MATERIAL AS BASIS FOR DEMONSTRATION.

3.8 TOOLS AND SPARE PARTS

A. PRIOR TO FINAL PAYMENT, SUPPLY OWNER WITH OPERATING KEYS, SERVICING TOOLS, TEST EQUIPMENT, AND OTHER ITEMS SPECIFIED IN THIS SECTION.

B. OTHER MATERIALS:

1. INSTALL OTHER MATERIALS OR EQUIPMENT INDICATED ON DRAWINGS TO BE PART OF IRRIGATION SYSTEM, EVEN THOUGH SUCH ITEMS MAY NOT HAVE BEEN REFERENCED IN THIS SECTION.

3.9 CLEANUP

A. PERFORM CLEANUP AS EACH PORTION OF WORK PROGRESSES. REMOVE REFUSE AND EXCESS DIRT FROM SITE, CLEAN WALKS AND PAVING, AND REPAIR DAMAGE SUSTAINED TO WORK OF OTHER TRADES TO ORIGINAL CONDITION.

B. UPON COMPLETION OF WORK, REMOVE EXCESS MATERIALS, RUBBISH AND DEBRIS. SWEEP ADJACENT ROADWAYS, CURBS, GUTTERS AND SIDEWALKS AND REMOVE CONSTRUCTION EQUIPMENT FROM SITE.

3.10 FINAL PAYMENT

A. OPERATE EACH SYSTEM IN ITS ENTIRETY FOR OWNER'S REVIEW AT TIME OF FINAL PAYMENT. REWORK ANY ITEMS DEEMED NOT ACCEPTABLE BY OWNER.

3.11 SITE VISIT OBSERVATION SCHEDULE

A. NOTIFY OWNER IN ADVANCE OF FOLLOWING REQUIRED SITE VISITS:

1. PRE-JOB OR "KICK-OFF" MEETING - 7 DAYS.
2. LATERAL LINE AND SPRINKLER HEAD INSTALLATION - 2 DAYS.
3. SPRINKLER HEAD COVERAGE TEST - 2 DAYS.
4. FINAL PAYMENT WALK-THROUGH - 7 DAYS.

B. NO SITE VISITS WILL COMMENCE WITHOUT UPDATED PROJECT RECORD DRAWINGS BEING PRESENT ONSITE.

END OF SECTION

Richie-Bray, Inc.
LANDSCAPE ARCHITECTURE

904 Silver Spur Road #395
Rolling Hills Estates, CA 90274
(310) 377-5868

E-mail: deb@richie-bray.com

LICENSED LANDSCAPE ARCHITECT
DEBORAH RICHIE #4407
Signature
Renewal Date
Date
STATE OF CALIFORNIA

PROJECT TITLE

ROLLING HILLS
COMMUNITY
TENNIS COURTS

2 PORTUGUESE BEND ROAD
ROLLING HILLS, CA 90274

ASSESSOR'S ID NO.: 7569-015-900

SHEET TITLE

IRRIGATION
SPECIFICATION

REVISIONS

SCALE: N/A

DATE: 06-15-2023

DRAWN BY:

CHECKED:

XREF FILE:

PROJECT NO.

SHEET NO.

LI-5

LIGHTING SCHEDULE :

SYM.	TYPE	QTY	DESCRIPTION	MANUFACTURER	FIXTURE	SPECIFICATIONS	COLOR	REMARKS
~~⊗~~	~~L 1~~	~~0~~	~~DOWNLIGHT (ON TREES)~~	~~FX LUMINAIRE~~	~~PS~~	~~3 LED / 20 WATT~~	~~CU-AB~~	
⊕	L 2	6	TRELLIS WALL LIGHT	FX LUMINAIRE	NL	3 LED / 20 WATT	CU-AB	
⌒	L 3	18	WALL LIGHT - RECESSED	FX LUMINAIRE	UN	1 LED / 10 WATT	AB	ADA APPROVED
~~▭~~	~~L 4~~	~~0~~	~~HOUSE LIGHT~~	~~MATCH HOA~~	~~MATCH HOA~~	~~MATCH HOA~~	~~MATCH HOA~~	
⊶	L 5	10	PATH LIGHT	FX LUMINAIRE	FG	3 LED / 20 WATT	AB	
◪	L 6	6	PILASTER LIGHT	KING LUMINAIRE	K601D	LED	TBD	
▭	L 7	1	TRANSFORMER	FX LUMINAIRE	PX	600 WATT	SS	

NOTES :

1. LANDSCAPE LIGHTING FIXTURES NOTED ON PLAN ARE DESIGN INTENT FOR LIGHTING TYPE & LOCATION ONLY. REFER TO ELECTRICAL DRAWINGS FOR ALL CIRCUITRY, SWITCH/CONTROLS AND POWER REQUIREMENTS. FINAL LOCATION AND FIXTURE AIMING TO BE FIELD VERIFIED BY LANDSCAPE ARCHITECT.
2. TRANSFORMERS TO BE INSTALLED FOR SEPARATE CIRCUITS AS REQUIRED.
3. PLANTER AND DECK DRAIN LOCATIONS ARE TO BE DETERMINED BY LANDSCAPE ARCHITECT ON SITE.
4. ALL LAMPS LED.
5. ELECTRIC LOADS AND TRANSFORMERS TO BE CALCULATED & APPROVED BY CERTIFIED ELECTRICIAN BEFORE INSTALLATION.
6. ALL LIGHT FIXTURES SHALL MEET DARK-SKY COMPLIANCE REQUIREMENTS.

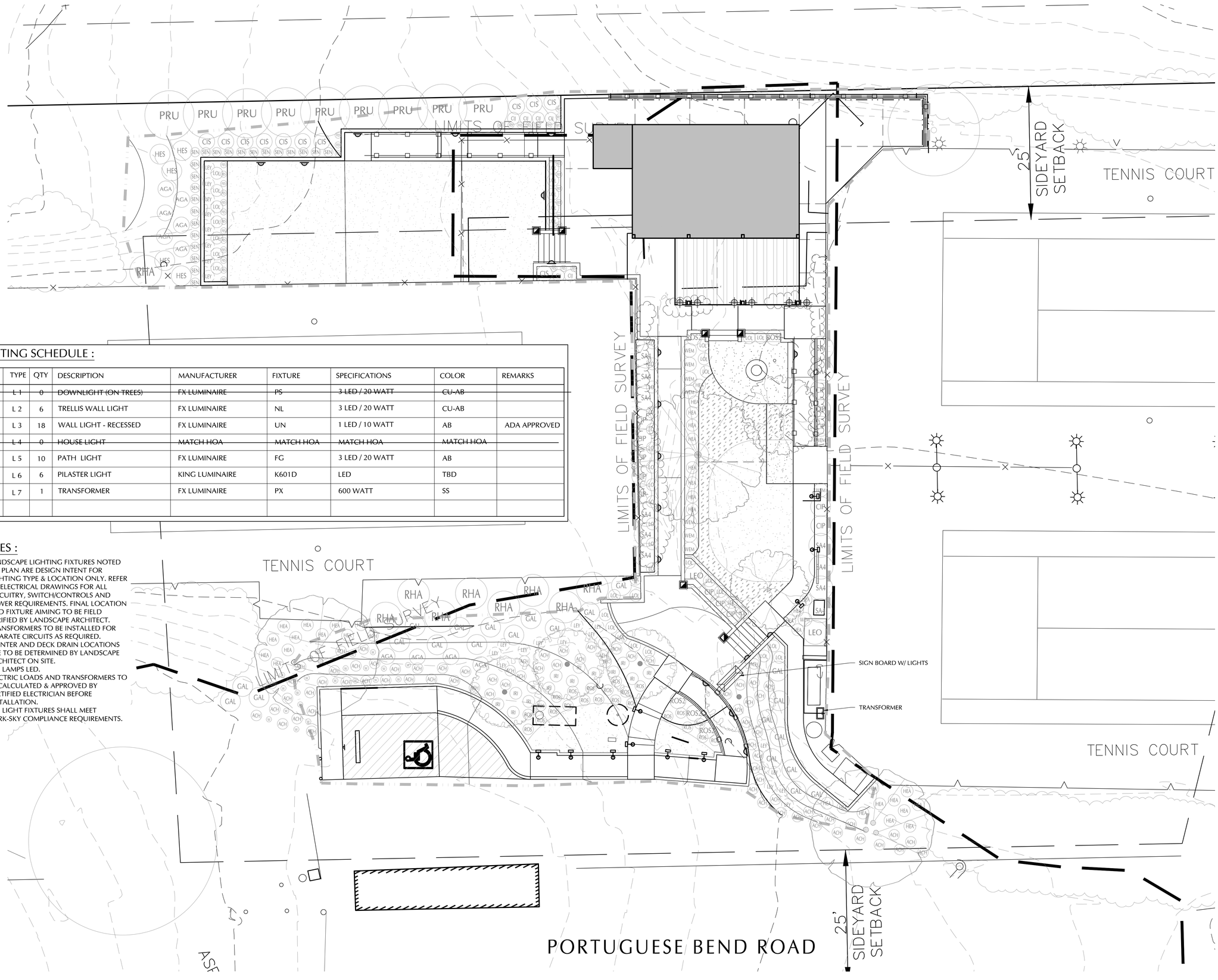

Richie-Bray, Inc.
LANDSCAPE ARCHITECTURE

904 Silver Spur Road #395
Rolling Hills Estates, CA 90274
(310) 377-5868

E-mail: deb@richie-bray.com

LICENSED LANDSCAPE ARCHITECT
DEBORAH RICHIE #4467
Signature
Renewal Date
Date
STATE OF CALIFORNIA

PROJECT TITLE

ROLLING HILLS
COMMUNITY
TENNIS COURTS

2 PORTUGUESE BEND ROAD
ROLLING HILLS, CA 90274

ASSESSOR'S ID NO.: 7569-015-900

SHEET TITLE

LIGHTING PLAN

REVISIONS

07-06-2023

SCALE: 1/8" = 1'-0"

DATE: 06-15-2023

DRAWN BY:

CHECKED:

XREF FILE:

PROJECT NO.

SHEET NO.

LL-1

FXLuminaire

LED Wall Lights



The UN washes walkways with LED efficiency and shadow-free illumination, which highlights the detail in fine stonework, or the richness of wooden decks. It is available in both brass and composite material for design flexibility.

UN: Wall Light

NUMBER OF LEDS:	1
HALOGEN LUMEN OUTPUT EQUIVALENT:	10 Watt
USEFUL LED LIFE (L70):	50,000 hrs avg
INPUT VOLTAGE:	10 to 15V
VA TOTAL: (Use this number to size the transformer)	2.4
WATTS USED:	2.0
LUMENS PER WATT (EFFICACY)	5.5
MAX LUMENS:	11
CCT (Ra)	80.2

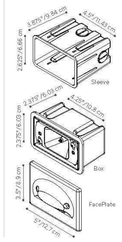

760.744.5240

FXLuminaire

LED Down Lights



The NL represents the next generation of fixed-mount LED down lights. This sidemounting down light is available with a 1, 3, 6 or 9LED board. The NL is available in all of our metal and powder coat finishes and includes a free mounting bracket that allows for tool-free servicing after initial installation.

NL: Down Light

NUMBER OF LEDS:	1	3	6	9
HALOGEN LUMEN OUTPUT EQUIVALENT:	10 Watt	20 Watt	35 Watt	50 Watt
USEFUL LED LIFE (L70):	50,000 hrs avg	50,000 hrs avg	50,000 hrs avg	50,000 hrs avg
INPUT VOLTAGE:	10 to 15V	10 to 15V	10 to 15V	10 to 15V
VA TOTAL: (Use to size the lighting controller)	2.4	4.5	13.5	13.5
WATTS USED:	2.0	4.2	10.1	11.2
LUMENS PER WATT (EFFICACY)	35.8	52.2	43.9	46.9
MAX LUMENS:	66	202	367	398
CRI (Ra)	82.6	80.4	79.7	78.5



Learn more about FX Luminaire down lights. Visit: fxl.com

760.744.5240

FXLuminaire

LED Down Lights



The PS represents the next generation of fixed-mount LED down lights. It is designed for top-mounting, and is available with an optional copper cover. The PS works with 1, 3, 6 or 9LED boards and is available in all of our metal and powder coat finishes. A mounting bracket is included for installation.

PS: Down Light

NUMBER OF LEDS:	1	3	6	9	ZDC
HALOGEN LUMEN OUTPUT EQUIVALENT:	10 Watt	20 Watt	35 Watt	50 Watt	20 Watt
USEFUL LED LIFE (L70):	50,000 hrs avg	50,000 hrs avg	50,000 hrs avg	50,000 hrs avg	50,000 hrs avg
INPUT VOLTAGE:	10 to 15V	10 to 15V	10 to 15V	10 to 15V	10 to 15V
VA TOTAL: (Use this number to size the transformer):	2.4	4.5	13.5	13.5	11.0
WATTS USED:	2.0	4.2	10.1	11.2	9.1
LUMENS PER WATT (EFFICACY)	35	52	43	46	33
MAX LUMENS:	66	202	367	397	57
CRI	82	80	79	78	83
CBCP	275	975	2022	2276	62

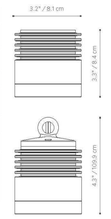

Learn more about FX Luminaire down lights. Visit: fxl.com

760.744.5240

ORDERING INFORMATION — LED

UN: Wall Light

FACTORY INSTALLED OPTIONS: Order 1 + 2 (optional) + 3 + 4

Step	Description	Code
1	FIXTURE	UN
2	OPTIONAL ZD	ZD *(Refer to the Luxor page in the Lighting Control section)*
3	LAMP	1LED *(50,000 avg. life hours)*
4	FINISH	AB*, AT*, NP*, BS, WG, FW, AL, BZ, DG, WI, VF, SB, FB, DT, CB

EXAMPLE: UN-ZD-1LED-CB = UN - ZD Option - 1LED Board - Camo Bronze Finish

PHOTOMETRICS:



Beam angle is calculated using LM-79 method for SSL Luminaires.
*Beam angle is defined as two times the vertical angle at which the intensity is 50% of the maximum."

cULus LISTED 3YJ8

MOUNTING FEATURES AND DIMENSIONS:

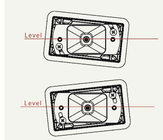

Perfectly Level Every Time

The LevelX system allows the composite sleeve to be up to ⅛" out of level, in either direction, while still allowing the faceplate to be laser level.

The secret: The trim attaches to the adjustable reflector assembly - not the composite sleeve or body. Heavy foam gasket keeps light spill to a minimum.

METALS

- AB = Antique Bronze* (On Brass)
- AT = Antique Tumbled* (On Brass)
- NP = Nickel Plate*
- BS = Natural Brass

POWDER COAT

- WG = White Gloss
- FW = Flat White
- AL = Almond
- BZ = Bronze Metallic
- DG = Desert Granite
- WI = Weathered Iron
- VF = Verde Speckle
- SB = Sedona Brown
- FB = Flat Black

COMPOSITE

- CB = Camo Bronze
- DT = Desert Tan

The UN includes a 1LED board, choice of faceplate finish, 8 ft lead wire and mounting sleeve.

All UN wall lights come standard with amber, and frosted filters

** May require longer lead time*

4/12 760.744.5240 | fxl.com FXLuminaire

ORDERING INFORMATION — LED

NL: Down Light

FACTORY INSTALLED OPTIONS: Order 1 + 2 (optional) + 3 + 4

Step	Description	Code
1	FIXTURE	NL
2	OPTIONAL ZD	ZD *(Refer to the Luxor page in the Lighting Control section)*
3	LAMP	1LED, 3LED, 6LED, 9LED *(50,000 avg. life hours)*
4	FINISH	AB*, AT*, CU, NP*, BS, WG, FW, AL, BZ, DG, WI, VF, SB, FB

EXAMPLE: NL-ZD-3LED-FB = NL - ZD Option - 3LED Board - Flat Black Finish

FIELD INSTALLED OPTIONS: Order Individually

Beam Angle Lenses			
LENS OPTIONS	1LED	3LED	6/9LED
Diffuser 18° *(preassembled/most fixtures)*	770600	771300	771600
Flood Lens 30-32° *(3 notch)*	1LEDFLLENS	3LEDFLLENS	9LEDFLLENS
Wide Flood Lens 56-58° *(2 notches)*	1LEDWFLLENS	3LEDWFLLENS	9LEDWFLLENS

PHOTOMETRICS:



Beam angle is calculated using LM-79 method for SSL Luminaires.
*Beam angle is defined as two times the vertical angle at which the intensity is 50% of the maximum."

cULus LISTED 3YJ8

METALS

- CU-AB = Antique Bronze** (On Copper)
- BS-AB = Antique Bronze* (On Brass)
- CU-AT = Antique Tumbled** (On Copper)
- BS-AT = Antique Tumbled* (On Brass)
- CU = Copper†
- NP = Nickel Plate*
- BS = Natural Brass

POWDER COAT

- WG = White Gloss
- FW = Flat White
- AL = Almond
- BZ = Bronze Metallic
- DG = Desert Granite
- WI = Weathered Iron
- VF = Verde Speckle
- SB = Sedona Brown
- FB = Flat Black

The NL includes your choice of LED boards, choice of finish, 9 ft. lead wire and mounting bracket.

All NL down lights come standard with amber, green, blue and frosted filters

** May require longer lead time*

† Fixture is covered by a copper sleeve

4/12 760.744.5240 | fxl.com FXLuminaire

ORDERING INFORMATION — LED

PS: Down Light

FACTORY INSTALLED OPTIONS: Order 1 + 2 (optional) + 3 + 4 (optional) + 5

Step	Description	Code
1	FIXTURE	PS
2	LUXOR OPTION	ZD, ZDC† (Color)
3	LAMP	1LED, 3LED, 6LED, 9LED, _____†
4	OPTIONAL HANGING BRACKET	HB *(Hanging bracket)*
5	FINISH	CU, AB, AT, NP

EXAMPLE: PS-3LED-LS-CU = PS - 3LED Board - Long Shroud Option - Copper Finish
PS-ZDC-AB = PS - ZDC Option - Antique Bronze Finish

† Fixtures specified with ZDC Technology™ are available only in one circuit board configuration. Do not specify a number of LEDs when ordering.

FIELD INSTALLED OPTIONS: Order Individually

Beam Angle Lenses			
LENS OPTIONS	1LED	3LED	6/9LED
Diffuser 18° *(Preassembled)*	770600	771300	771600
Flood Lens 30-32° *(1 notch)*	1LEDFLLENS	3LEDFLLENS	9LEDFLLENS
Wide Flood Lens 56-58° *(2 notches)*	1LEDWFLLENS	3LEDWFLLENS	9LEDWFLLENS

PHOTOMETRICS:



Beam angle is calculated using LM-79 method for SSL Luminaires.
*Beam angle is defined as two times the vertical angle at which the intensity is 50% of the maximum."

METALS

- CU-AB = Antique Bronze** (On Copper)
- BS-AB = Antique Bronze* (On Brass)
- CU-AT = Antique Tumbled** (On Copper)
- BS-AT = Antique Tumbled* (On Brass)
- CU = Copper†
- NP = Nickel Plate*
- BS = Natural Brass

POWDER COAT

- WG = White Gloss
- FW = Flat White
- AL = Almond
- BZ = Bronze Metallic
- DG = Desert Granite
- WI = Weathered Iron
- VF = Verde Speckle
- SB = Sedona Brown
- FB = Flat Black

The PS includes your choice of LED board, choice of finish, 9 ft. lead wire and mounting bracket.

All PS down lights come standard with amber, green, blue and frosted filters

** May require longer lead time*

† Fixture is covered by a copper sleeve

Fixture with optional hanging bracket installed

cULus LISTED 3YJ8

11/16 760.744.5240 | fxl.com FXLuminaire

WALL LIGHT - RECESSED | L 3

TRELLIS WALL LIGHT | L 2

DOWN LIGHT (ON TREES) | L 1

Richie-Bray, Inc.
LANDSCAPE ARCHITECTURE

904 Silver Spur Road #395
Rolling Hills Estates, CA 90274
(310) 377-5868

E-mail: deb@richie-bray.com

LICENSED LANDSCAPE ARCHITECT
DEBORAH RICHIE #4467
Signature
Renewal Date
Date
STATE OF CALIFORNIA

PROJECT TITLE

ROLLING HILLS COMMUNITY TENNIS COURTS

2 PORTUGUESE BEND ROAD
ROLLING HILLS, CA 90274

SHEET TITLE

LIGHTING SPECIFICATION

REVISIONS

07-16-2023

SCALE: N/A

DATE: 06-15-2023

DRAWN BY:

CHECKED:

XREF FILE:

PROJECT NO.

SHEET NO.

LL-2

FXLuminaire

Lighting Controller



This is the high tech heart of the FX Luminaire low voltage lighting system. The PX is available in 300, 600 and 900 Watt capacities with a variety of control options. The enclosure is fabricated from heavy gauge stainless steel for long life in corrosive exterior locations.

PX: Transformer

MODELS:	300, 600 or 900 Watt
FINISHES:	Stainless Steel or Powder Coat Finishes
ACCESSORY:	Timer and/or Photocell
DEPTH:	6" / 15.24 cm
WIDTH:	7.5" / 19.1 cm
HEIGHT: (300 & 600 Watt)	13.5" / 34.3 cm
(900 Watt)	16.5" / 41.9 cm

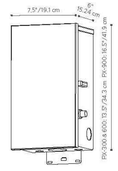

Learn more about FX Luminaire lighting control. Visit: fxl.com

760.744.5240

ORDERING INFORMATION



PX: Transformer

FACTORY INSTALLED OPTIONS: Order 1 + 2 + 3 + 4

Step	Description	Code
1	TRANSFORMER	PX
2	SIZE	300, 600, 900 (Watts)
3	OPTIONAL SWITCHING	T (Timer), PC (Photocell), or TPC (Timer & Photocell)
4	FINISH	SS, WG, FW, AL, BZ, DG, WI, VF, SB, FB

EXAMPLE: PX-300-SS = PX Transformer -300W - Stainless Steel Finish

FIELD INSTALLED OPTIONS: Order Individually

Description	Code
FIXTURE	PXSYNC (PX Sync Lighting Synchronizer for 24V for Irrigation Controllers; 2.75"w x 3"h x 1.5"d)

EXAMPLE: PXSYNC = PX SYNC Lighting Synchronizer

PX FEATURES

- **Stainless Steel Construction:** No plated common steel is used which means no rust
- **Open Switching Control Architecture:** Any standard timer, photocell, manual switch, or "smart home" device may be used
- **Extra Large Terminal Block:** Each terminal can handle up to 1612-gauge conductors
- **Nickel-plated Terminal Block Hardware:** The ultimate conductive surface to minimize resistance
- **Aerospace Circuit Breakers:** These breakers are not temperature sensitive which minimizes nuisance tripping so the transformer can be fully loaded
- **Two-Inch Conduit Knock-Out:** Allows installer to bring up to 20 cables to the terminal block
- **Industry Leading Warranty:** 10-year warranty for extra assurance

METALS

SS = Stainless Steel

POWDER COAT

WG = White Gloss
FW = Flat White
AL = Almond
BZ = Bronze Metallic
DG = Desert Granite
WI = Weathered Iron
VF = Verde Speckle
SB = Sedona Brown
FB = Flat Black

The PX comes standard in stainless steel, with a 3' power cord, choice of timer and/or photocell.

SAFETY STANDARDS

ETL Listed to UL Standards For Safety:
1012 - UL1838
1590 - ETL1838/379
1590 - ETL1838/379
UL1838 Standards
UL379 Standards

For high performance and predictable lamp life use FX LUMINAIRE Transformers only. The PX is specifically designed for the high ballast load in our fixtures — the use of inferior power supplies can cause premature lamp failure and other problems including the risk of fire. For more information on this very important subject please contact us at 310.744.5240.

4/12

760.744.5240 | fxl.com

FXLuminaire

TRANSFORMER | L 7



K601D COACH LANTERN - LED

The K601D is a cost effective coach lantern with a historical appearance that offers high performance Advanced LED Technology with our signature P4 optical system. It has excellent spacing and low glare providing a perfect solution for city streets, parks, schools and commercial areas.

King Luminaire

PRODUCT SPECIFICATIONS

LED ENGINE
Light engine shall include an array of 30, 60 or 84 solid state Cree X-Series high power LEDs (light emitting diodes). The emitters shall be mounted to a metal core circuit board using SMT technology. The LEDs and circuit boards shall then be mounted to a high performance heat sink.

OPTICS
External light control shall consist of high precision refractive lenses mounted above the LED emitter arrays in such a way to achieve optimum uplight control. The lenses shall also control horizontal light distribution so that Type II, III, IV or V IESNA distribution patterns are achieved.

LENS
The K601D Coach Lantern is available with or without a lens. The lens panels can be made of clear polycarbonate or clear acrylic.

LUMINAIRE CONSTRUCTION
All cast components shall consist of an aluminum alloy. The main body acts as an enclosure for the LED array and is of adequate thickness to give sufficient structural rigidity.

With the Post Top, the capital shall have an opening at the base tenon body to allow the luminaire to be mounted to a tenon of 3-1/2" maximum diameter. The luminaire shall be locked in place by means of heavy duty, stainless steel set-screws.

The K601D Coach Lantern is also available as a pendant with multiple mounting options, including the KPL10, KPL11, KPL20, KPL21, KPL30, KPL31 and KPL40. The K601D Coach Lantern can also be mounted with a Side Mounted scroll arm. Please contact King Luminaire for more details and specifications.

DRIVER
The LED universal dimmable driver will be class 2 and capable of 120 - 277V or 347 - 480V input voltage, greater than 0.9 power factor, less than 20% total harmonic distortion. The case temperature of the driver can range from -40°C up to 70°C. Each LED system comes with a standard surge protection designed to withstand up to 20kV/10kA of transient line surge as per IEEE C62.41.2 C High. An in-line ferrite choke is utilized to provide protection against EFT's. Dimming capable using 1-10vdc (10% to 100%), 10v PWM, or resistance.

PHOTOMETRICS
Fixtures are tested to IESNA LM79 specifications. These reports are available upon request.

CHROMATICITY
High output LEDs come standard at 3000K & 4000K (+/- 300K) with a minimum nominal 70 CRI. Additional CCT emitters are available upon request.

LUMEN MAINTENANCE
Reported (TM21) and Calculated (L70) reports are available upon request with a minimum calculated value of 100,000 hrs.

WIRING
All internal wiring and connections shall be completed so that it will be necessary only to attach the incoming supply connectors to Mate-N-Lok connectors or to a terminal block. Mate-N-Lok shall be certified for 600V operation. Internal wire connectors shall be crimp connector only and rated at 1000V and 150°C. All wiring to be CSA certified and/or UL listed, type SFF-2, SEWF-2, or SEW-2 No. 14 gauge, 150°C, 600V, and color coded for the required voltage.

THERMALS
Fixtures tested by a DOE sanctioned test facility to determine the maximum in-situ solder-point or junction-point temperatures of the LED emitters. This report is available upon request.

FINISH
Housing is finished with a 13 step KingCoat™ SuperDurable polyester TGIC powder coat. Standard colors include strobe white, brown metal, marina blue, gate gray, Chicago bronze, standard gold, standard black, federal green and rain forest. Please see our website for a complete list of colors, RAL and custom color matches are available.

MISCELLANEOUS
All exterior hardware and fasteners, wholly or partly exposed, shall be stainless steel alloy. All internal fasteners are stainless steel or zinc coated steel. All remaining internal hardware is stainless steel, aluminum alloy, or zinc coated steel.

WARRANTY
The K601D Coach Lantern LED luminaire comes with a 7 year limited warranty.

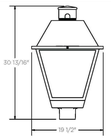

CERTIFICATION:
CSA US Listed
Suitable for wet locations
ISO 9001
IP66
ARRA Compliant
LM79 / LM80 Compliant

DRIVER INFO:
>0.9 Power Factor
<20% Total Harmonic Distortion
120 - 277V & 347 - 480V
-40°C Min. Case Temperature
70°C Max. Case Temperature
Surge Protector: ANSI C136.2
extreme level 20kV/10kA
Dimming Capable: 1-10vdc

EPA (with Lens):

Post Top:	2.7 sq. ft.
Side Mount:	2.45 sq. ft.
Pendant:	2.45 sq. ft.

FIXTURE WEIGHT (with Lens):

Post Top:	34 lbs
Side Mount:	25 lbs
Pendant:	25 lbs

IDA certification applicable for maximum 3000K CCT. Glass lenses do not apply.

DLC LISTED | C SP US | SGS

Not all product variations listed on this page are DLC qualified. Visit www.designlights.org/search to confirm qualification.
07.06.2023

FIXTURE OPTIONS

K601D COACH LANTERN - LED

Fixture Formats



Finial Options (Post Top/Side Mount)

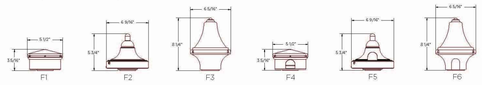

Plumbizer/Mounting Options (Pendant)



*Available with P87
**Available with P87 or finial

HOW TO ORDER

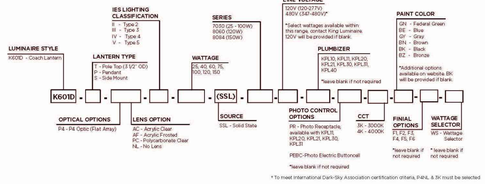

StressCrete GROUP

www.scgrp.com

King Luminaire

4/12

760.744.5240 | fxl.com

FXLuminaire

PILASTER LIGHT | L 6

FXLuminaire

LED Path Lights



FG is a beautiful blend of solid brass and copper with clean, classic lines. Its timeless design complements many themes, from Craftsman to Tudor style architectures.

FG: Path Light

NUMBER OF LEDS:	1	3	6	9
HALOGEN LUMEN OUTPUT EQUIVALENT:	10 Watt	20 Watt	35 Watt	50 Watt
USEFUL LED LIFE (L70):	50,000 hrs avg	50,000 hrs avg	50,000 hrs avg	50,000 hrs avg
INPUT VOLTAGE:	10 to 15V	10 to 15V	10 to 15V	10 to 15V
VA TOTAL: (Use to size the lighting controller)	2.4	4.5	13.5	13.5
WATTS USED:	2.0	4.2	10.1	11.2
LUMENS PER WATT (EFFICACY)	37	42	50	54
MAX LUMENS:	74	167	374	474
CRI (Ra)	84	81	81	79



Learn more about FX Luminaire path lights. Visit: fxl.com

760.744.5240

ORDERING INFORMATION — LED

FG: Path Light

FACTORY INSTALLED OPTIONS: Order 1 + 2 (optional) + 3 + 4

Step	Description	Code
1	FIXTURE	FG
2	OPTIONAL ZD	ZD (Refer to the Luxor page in the Lighting Control section)
3	LAMP	1LED, 3LED, 6LED & 9LED (50,000 avg. life hours)
4	FINISH	AB*, AT*, CU, NP*, WG, FW, AL, BZ, DG, WI, VF, SB, FB

EXAMPLE: FG-ZD-3LED-SB = FG - ZD Option - 3 LED Board - Sedona Brown Finish

FIELD INSTALLED OPTIONS: Order Individually

Mounting Options	Long Slot Spike	Super Slot Spike	Super J-Box XX**	Post Mount XX**
Long Slot Spike (2500158400000) 2.5" x 10" Included				
Super Slot Spike (753900) 2" x 10"				
Super J-Box (SJ-XX**) 2.5" x 12"				
Post Mount (PM-XX**) 2.5" x 13"				

EXAMPLE: 753900 = Super Slot Spike

PHOTOMETRICS:

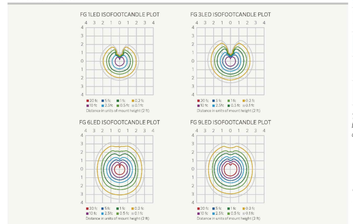

The FG includes your choice of LED board and finish, 2 ft lead wire and a Long Slot Spike.

METALS

AB = Antique Bronze* (UV Coated)
AT = Antique Tumbled* (UV Coated)
CU = Copper
NP = Nickel Plate*

POWDER COAT

WG = White Gloss
FW = Flat White
AL = Almond
BZ = Bronze Metallic
DG = Desert Granite
WI = Weathered Iron
VF = Verde Speckle
SB = Sedona Brown
FB = Flat Black

The FG includes choice of LED board and finish, 2 ft lead wire and a Long Slot Spike.

All FG path lights come standard with amber, green, blue and frosted filters

*May require longer lead time

** Denotes finish code

cULus LISTED 3YJB

4/12

760.744.5240 | fxl.com

FXLuminaire

PATH LIGHT | L 5

Richie-Bray, Inc.
LANDSCAPE ARCHITECTURE

904 Silver Spur Road #395
Rolling Hills Estates, CA 90274
(310) 377-5868

E-mail: deb@richie-bray.com

LICENSED LANDSCAPE ARCHITECT
DEBORAH RICHIE #4467
Signature
Renewal Date
Date
STATE OF CALIFORNIA

PROJECT TITLE

ROLLING HILLS COMMUNITY TENNIS COURTS

2 PORTUGUESE BEND ROAD
ROLLING HILLS, CA 90274

SHEET TITLE

LIGHTING SPECIFICATION

REVISIONS

SCALE: N/A

DATE: 06-15-2023

DRAWN BY:

CHECKED:

XREF FILE:

PROJECT NO.

SHEET NO.

LL-3

Attachment H

PORTUGUESE BEND/ROLLING HILLS ROAD SEWER MAIN IMPROVEMENT PROJECT

CITY OF ROLLING HILLS, COUNTY OF LOS ANGELES

NOVEMBER 2021

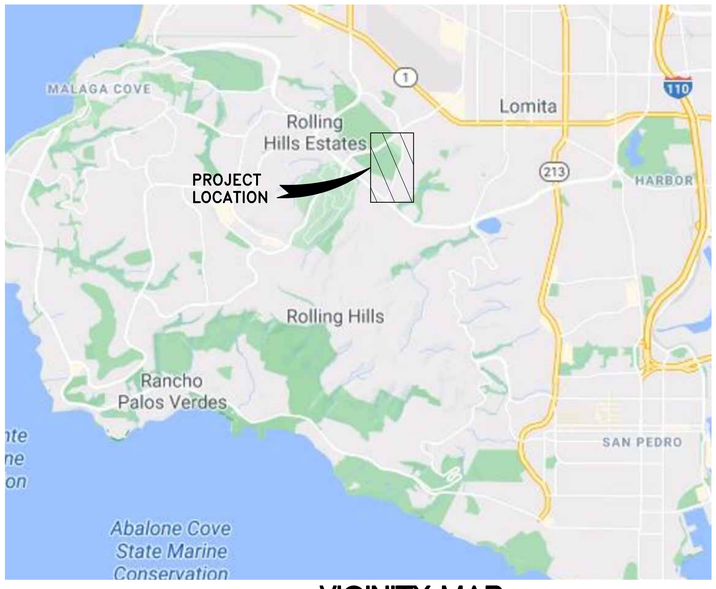

VICINITY MAP

NOT TO SCALE

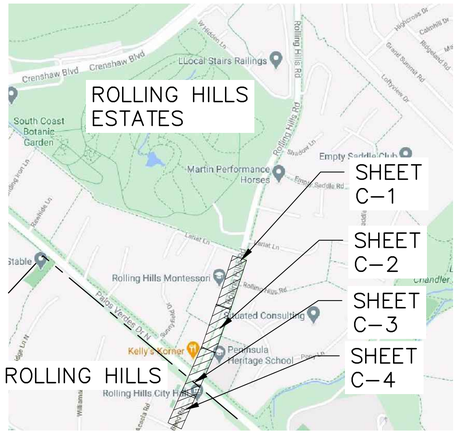

LOCATION MAP

NOT TO SCALE

APPROVED BY:

CITY OF ROLLING HILLS DATE

CITY OF ROLLING HILLS ESTATES DATE

CITY OF TORRANCE DATE

SHEET INDEX

SHT. NO.	DWG. NO	DESCRIPTION
1	T-1	TITLE SHEET, VICINITY MAP, LOCATION MAP AND SHEET INDEX
2	T-2	GENERAL NOTES ABBREVIATIONS AND LEGEND
3	C-1	ROLLING HILLS RD SEWER MAIN PLAN STA. 40+00 TO STA. 44+50
4	C-2	ROLLING HILLS RD SEWER MAIN PLAN STA. 44+50 TO STA. 49+50
5	C-3	ROLLING HILLS RD SEWER MAIN PLAN STA. 49+50 TO STA. 54+00
6	C-4	ROLLING HILLS RD SEWER MAIN PLAN STA. 54+00 TO STA. 57+00
7	C-5	ROLLING HILLS ESTATES RE-PAVEMENT AND MARKINGS
8	C-6	ROLLING HILLS ESTATES RE-PAVEMENT AND MARKINGS
9	D-1	MANHOLE DETAILS
10	D-2	DETAILS

PUBLIC AGENCIES & UTILITIES

AGENCY	CONTACT PERSON	TELEPHONE NO.
COX COMMUNICATIONS	THOMAS ELDRED	1-800-290-6623
CALIFORNIA WATER SERVICE	–	310-257-1400
LA COUNTY DEPT PUBLIC WORKS	–	–
CROWN CASTLE – LA AND VEN	NICK BELINSKY	1-888-632-0931
FRONTIER		213-542-0100
CITY OF TORRANCE		310-618-2831
SCE	–	–
CITY OF ROLLING HILLS ESTATES		310-377-1577 ext. 103
CITY OF ROLLING HILLS		310-377-1521

REFERENCES:

SANITARY SEWER:
SS-1021 PALOS VERDES NORTH SLOPE TRUNK SEWER, SECTION 1
SS-1044 PALOS VERDES NORTH SLOPE RELIEF TRUNK SEWER
SS-43 PLAN AND PROFILE OF SANITARY SEWER IN ROLLING HILLS ROAD

STORM DRAIN PLANS:
SD-1027 LA COUNTY FLOOD CONTROL DISTRICT ROLLING HILLS ESTATES PORTION OF LINE A (CONCRETE CONDUIT)
SD-122 CITY OF TORRANCE STORM DRAIN

WATER PLANS:
WP-291 CITY OF TORRANCE WESTERN AVE AND ROLLING HILLS ROAD WATER MAIN REPLACEMENT ROJECT (CIP NO. I-107)
WP-179 CITY OF TORRANCE WATER DEPARTMENT 18 MG WALTERIA RESERVOIR

CALL TOLL FREE 811 Know what's below. Call two working before you dig. Underground Service Alert

BENCH MARK

ELEVATIONS ARE REFERENCED TO NAVD88, UTILIZING GEOID12(A) AND DETERMINED LOCALLY BY GPS TIES TO LOS ANGELES COUNTY BENCHMARK "GY12603". THE BENCHMARKS IS A LEAD AND DISK STAMPED "LS8601". ELEVATION =245.039 SFT

GY12603 – L & LS TAG #8601 E'LY CB ROLLING HILLS RD. 0.7' S'LY OF ECR NE'LY COR CRENSHAW BLVD.

NO.	DATE	REVISIONS	ENGR.	APPROV.	DATE
6					
5					
4					
3					
2					
1					

DRAWN BY: RG DATE DEC-20
DESIGNED BY: DAM DATE DEC-20
CHECKED BY: LEB DATE MAY-23

REGISTERED PROFESSIONAL ENGINEER LUANNE BEAN CIVIL STATE OF CALIFORNIA

PLANS PREPARED BY:
NV5
WWW.NV5.COM
163 TECHNOLOGY DRIVE #100
IRVINE, CA 92618
TEL. (949) 585-0477
FAX. (949) 585-0433

LUANNE BEAN, PE C50129 06/30/25
CIVIL ENGINEER: LICENSE NO. EXP. DATE

CITY OF ROLLING HILLS
PUBLIC WORKS DEPARTMENT

8-INCH SEWER MAIN PORTUGUESE BEND/ROLLING HILLS ROAD
TITLE SHEET, VICINITY MAP, LOCATION MAP AND SHEET INDEX

DWG. NO. T-1

SHEET 1 OF 10

8-INCH SEWER PORTUGUESE BEND PROJECT

Z:\Rolling Hills\8-inch Sewer Main Portuguese Bend\Plans\CAD\SHT T-1.dwg 11/10/23 8:05am

GENERAL NOTES

1. ALL WORK SHALL CONFORM TO THE "STANDARD PLANS AND SPECIFICATIONS FOR PUBLIC WORKS CONSTRUCTION" (GREENBOOK), LATEST EDITION, INCLUDING SUPPLEMENTS, AND TO THE CITY OF ROLLING HILLS ESTATES PUBLIC WORKS DEPARTMENT'S STANDARD CONSTRUCTION DRAWINGS.
2. IT SHALL BE THE RESPONSIBILITY OF THE CONTRACTOR TO VERIFY IN THE FIELD THE EXACT LOCATION OF EXISTING UTILITIES, SIZE, QUANTITIES, AND SITE CONDITIONS
3. THE EXISTENCE AND LOCATION OF ALL UNDERGROUND UTILITIES, PIPES, OR STRUCTURES SHOWN ON PLANS ARE OBTAINED BY A SEARCH OF THE AVAILABLE RECORDS. APPROVAL OF THE PLANS BY THE CITY OF ROLLING HILLS ESTATES DOES NOT CONSTITUTE A REPRESENTATION OF THE ACCURACY, COMPLETENESS, LOCATION, EXISTENCE, OR NON-EXISTENCE OF ANY UNDERGROUND UTILITY, PIPE, OR STRUCTURE WITHIN THE LIMITS OF THIS PROJECT.
4. THE CONTRACTOR IS REQUIRED TO TAKE ALL DUE PRECAUTIONARY MEANS TO PROTECT UTILITY LINES. THE CONTRACTOR SHALL HAVE A COPY OF THE PROJECT PLANS AND SPECIFICATIONS ON THE JOB AT ALL TIMES.
5. THE ENGINEER SHALL BE NOTIFIED AT LEAST (5) WORKING DAYS PRIOR TO BEGINNING CONSTRUCTION FOR OBSERVATION OF CONSTRUCTION. NO FACILITIES SHALL BE BACKFILLED UNTIL OBSERVED BY THE ENGINEER.
6. ALL EXISTING IMPROVEMENTS INCLUDING CONCRETE CURB AND GUTTER, AC OR PCC PAVING WHICH ARE BEING JOINED OR MATCHED IN CONNECTION WITH THIS PROJECT SHALL BE JOINED OR MATCHED IN A MANNER SATISFACTORY TO THE ENGINEER, OWNER, AND/OR OWNER'S REPRESENTATIVE INCLUDING NECESSARY SAW CUTTING, REMOVAL, REPLACEMENT AND CAPPING. ALL CONCRETE SIDEWALKS OR CURBS TO BE REMOVED AND REPLACED SHALL BE SAW CUT TO THE NEAREST TRANSVERSE SCORE MARK OR ADJUSTABLE CONTROL, JOINT OR WEAKENED PLANE JOINT.
7. CONTRACTOR SHALL MAINTAIN THE WORK AREAS IN A NEAT, SAFE, CLEAN AND SANITARY CONDITION AT ALL TIMES AND TO THE SATISFACTION OF THE CITY. STREETS SHALL BE KEPT CLEAR OF DEBRIS, DUST AND OTHER NUISANCE AT ALL TIMES. THE CONTRACTOR SHALL BE RESPONSIBLE FOR ANY CLEANUP OF ADJACENT STREETS AFFECTED BY CONSTRUCTION.
8. TRAFFIC CONTROL DURING CONSTRUCTION OF CITY STREETS SHALL CONFORM TO THE STATE OF CALIFORNIA MANUAL OF TRAFFIC CONTROLS, SPECIAL PROVISIONS, CITY PERMIT, AND THE WORK AREA TRAFFIC CONTROL HANDBOOK (WATCH). TRAFFIC CONTROL PLAN, SIGNED BY LICENSED TRAFFIC ENGINEER, TO BE PROVIDED TO CITY OF TORRANCE.
9. THE CONTRACTOR SHALL NOTIFY UNDERGROUND SERVICE ALERT AT LEAST 48 HOURS BEFORE BEGINNING ANY CONSTRUCTION WORK BY CALLING 811.
10. SEWER LENGTHS SHOWN ARE HORIZONTAL DISTANCES AND MAY VARY FROM ACTUAL DISTANCES. CONTRACTOR'S PRICING SHALL BE BASED UPON ACTUAL DISTANCE REQUIRED TO INSTALL THE PIPES IN ACCORDANCE WITH CONTRACT DOCUMENTS AT NO ADDITIONAL COST TO THE OWNER FOR THE DURATION OF THE PROJECT WITHOUT LAPSES.
11. CONTRACTOR SHALL POSSESS A VALID CALIFORNIA CLASS "A" CONTRACTORS LICENSE.
12. WORK SHOWN OR INDICATED ON THESE PLANS, OR CALLED FOR IN THE SPECIFICATIONS BUT NOT INCLUDED AS PAY QUANTITY ITEMS, SHALL BE CONSIDERED INCIDENTAL WORK. THE COST OF WHICH SHALL BE INCLUDED IN THE CONTRACTOR'S BID FOR PAY QUANTITY ITEMS.
13. THE CONTRACTOR SHALL BE RESPONSIBLE FOR DAMAGE TO EXISTING UTILITIES, PAVEMENT, CURBS, TRAFFIC STRIPING AND MARKINGS, TRAFFIC SIGNAL EQUIPMENT (INCLUDING DETECTOR LOOPS), STRUCTURES (GARDEN WALLS, IRRIGATION SYSTEMS, AND OTHER EXISTING IMPROVEMENTS, AS A RESULT OF CONTRACTOR'S OPERATIONS, AND WILL BE REQUIRED TO REPAIR, REMODEL OR REPLACE SAME TO THE SATISFACTION OF, AS DIRECTED BY THE ENGINEER, OWNER, OWNER'S REPRESENTATIVE OR UTILITY COMPANY AT NO ADDITIONAL COST TO THE OWNER.
14. THE CONTRACTOR SHALL FURNISH ALL CONSTRUCTION SURVEYS FOR THE PROJECT AS DESCRIBED IN THE SPECIFICATIONS AT NO ADDITIONAL COST TO THE OWNER. SURVEY POINTS DESCRIBED AS A RESULT OF THE CONTRACTOR'S NEGLIGENCE OR FAILURE TO PROVIDE PROPER PROTECTION, SHALL BE REPLACED AT THE CONTRACTOR'S EXPENSE, AT NO ADDITIONAL COST TO THE OWNER. THE CONTRACTOR SHALL NOTIFY THE CITY AT LEAST FIVE (5) WORKING DAYS PRIOR TO CONSTRUCTION STAKING, AND REGULATORY AGENCIES AS REQUIRED IN ENCROACHMENT PERMITS.
15. THE CONTRACTOR SHALL CONDUCT CONSTRUCTION OPERATIONS IN SUCH A MANNER THAT STORM RUNOFF OR OTHER WATERS MAY PROCEED UNINTERRUPTED ALONG THE STREET OR DRAINAGE COURSES IN ACCORDANCE WITH CONTRACTOR'S APPROVED WATER POLLUTION CONTROL PLAN AND FEDERAL/STATE/LOCAL REGULATORY REQUIREMENTS AND GUIDELINES.
16. STATIONING OF REMOVALS AND WIDTHS OF REMOVALS INDICATE SCOPE OF WORK AND ARE APPROXIMATE ONLY. ACTUAL REMOVALS SHALL BE DIRECTED BY THE ENGINEER. CONSTRUCTION SITE SHALL BE MAINTAINED IN SUCH A CONDITION THAT AN UNANTICIPATED STORM DOES NOT CARRY WASTES OR POLLUTANTS OFF THE SITE. SUCH "DISCHARGES" OF MATERIAL OTHER THAN STORM WATER ARE ALLOWED ONLY WHEN NECESSARY FOR PERFORMANCE AND COMPLETION OF CONSTRUCTION PRACTICES, AND WHERE THEY DO NOT CAUSE OR CONTRIBUTE TO A VIOLATION OF ANY WATER QUALITY STANDARD, CAUSE OR THREATEN TO CAUSE POLLUTION, CONTAMINATION, OR NUISANCE, OR CONTAIN A HAZARDOUS SUBSTANCE IN A QUANTITY REPORTABLE UNDER FEDERAL REGULATIONS 40 CFR PARTS 117 AND 302.
17. THE CONTRACTOR SHALL PROTECT ALL SURVEY MONUMENTATION, IF ANY SURVEYING MONUMENTS ARE DISTURBED OR DESTROYED. THE CONTRACTOR SHALL RETAIN A LICENSED SURVEYOR TO RE-ESTABLISH AND RECORD THE MONUMENT CHANGE PER STATE LAW.
18. ALL LANDSCAPING AND IRRIGATION WHICH IS DISTURBED DURING CONSTRUCTION SHALL BE REPLACED IN-KIND, AND SHOULD BE INCLUDED IN THE BID PROCESS FOR WHICH THESE ITEMS ARE A PART OF. TREES WHICH ARE TEMPORARILY REMOVED SHALL BE REPLACED AT LOCATIONS DIRECTED BY THE CITY OF ROLLING HILLS ESTATES.
19. CONTRACTOR SHALL FILL ABANDONED PIPES WITH 2 SACK SLURRY GROUT. CONTRACTOR TO PROVIDE CITY REPRESENTATIVE OR ENGINEER OF RECORD THEORETICAL VOLUME WITH ACTUAL GROUT VOLUME PLACED IN ABANDONED PIPES.
20. MATERIALS AND WORKMANSHIP TO CONFORM TO THE 2019 EDITION OF THE CALIFORNIA BUILDING CODE AND THE REQUIREMENTS OF THE CONTRACT DOCUMENTS.

DEWATERING NOTES

1. GROUNDWATER MAY BE HIGH AND SEASONALLY VARIABLE AT EXCAVATIONS. DEWATERING SYSTEMS SHALL EFFECTIVELY INTERCEPT AND REMOVE WATER FROM SURROUNDING STRATA AND THUS PREVENT ITS ENTRY INTO THE EXCAVATION. THE EMPLOYMENT OF ANY OF THE AVAILABLE ALTERNATIVES TO ACHIEVE THIS OBJECTIVE MAY BE REQUIRED. RELIANCE SHALL NOT BE PLACED SOLELY ON SHEETING TO PROTECT WORK AREAS. THE ALTERNATIVE USE OF SYSTEM OF INTERLOCKING SHEET PILING WITH BRACES OR ANCHORAGE SUPPLEMENTED BY DEWATERING MEASURES OR OTHER MEANS WHICH MAY BE SUITABLE, SHALL BE PERMITTED.
2. PROVIDE ALL EQUIPMENT, LABOR, MATERIALS, TOOLS, AND INCIDENTALS NECESSARY TO DESIGN, CONSTRUCT, INSTALL AND OPERATE DEWATERING FACILITIES FOR CONSTRUCTION OF THIS WORK SUCH THAT ALL UNDERGROUND AND BELOW-GRADE WORK IS PERFORMED OR INSTALLED IN DRY EXCAVATIONS.
3. DEWATERING OF CONTAMINATED GROUNDWATER, OR DISCHARGING CONTAMINATED SOILS VIA SURFACE EROSION IS PROHIBITED. DEWATERING OF NON-CONTAMINATED GROUNDWATER REQUIRES A NATIONAL POLLUTANT DISCHARGE ELIMINATION SYSTEM PERMIT FROM THE RESPECTIVE STATE REGIONAL WATER QUALITY CONTROL BOARD.
4. CONTRACTOR SHALL OBTAIN A DEWATERING PERMIT FOR ANY SITE DEWATERING AS A PART OF THIS CONTRACT.

PAVEMENT NOTES

1. CONTRACTOR SHALL REMOVE AND DISPOSE OF EXISTING AC PAVEMENT AND PAVEMENT STRIPING IN ACCORDANCE WITH ALL LOCAL, STATE, AND FEDERAL REGULATIONS. BASED ON THE CONTRACTOR'S MEANS & METHODS OF REMOVAL. ALL REMOVAL AND DISPOSAL OF AC PAVEMENT SHALL BE INCLUDED IN BID PRICING.

NOTES:

1. REMOVED SEWER PIPES SHALL BE LEGALLY DISPOSED OF OFFSITE.
2. THE LOCATION OF EXISTING SEWER LATERALS SHOWN ON PLANS ARE APPROXIMATE. THE CONTRACTOR SHALL CCTV THE EXISTING SEWER MAIN PRIOR TO CONSTRUCTION AND VERIFY THE LOCATION OF ALL ACTIVE LATERALS AND CLEAN SEWER MAIN LINE AS NECESSARY TO HAVE A FUNCTIONAL SEWER SYSTEM BEFORE ANY CONSTRUCTION.
3. CONTRACTOR SHALL MAINTAIN EXISTING SEWER FLOWS AT ALL TIMES DURING CONSTRUCTION. SUBMIT SEWER BYPASS PLAN TO THE CITY OF TORRANCE FOR APPROVAL.
4. EXACT LOCATION AND DEPTH OF EXISTING UTILITIES ARE UNKNOWN AND SHOWN ACCORDING TO THE AVAILABLE RECORD INFORMATION. CONTRACTOR SHALL TAKE PRECAUTIONARY MEASURES WHICH ARE REQUIRED (I.E. POTHOLING UTILITY LOCATION, ETC.) TO DETERMINE THE LOCATION OF THE EXISTING UTILITIES PRIOR TO PROCUREMENT OF MATERIALS OR CONSTRUCTION OF THE PIPELINE. WHEN LESS THAN 12-INCH CLEARANCE IS AVAILABLE, PIPE TRENCH SHALL BE SLURRY BACKFILLED, 2-FT EACH SIDE OF CROSSING UTILITY.
5. CONTRACTOR SHALL PROTECT ALL EXISTING UTILITIES IN PLACE.
6. CONTRACTOR SHALL PROVIDE SUPPORTS AT ALL EXISTING UTILITY CROSSINGS PER SPPWC STANDARD PLAN 224-2.

CONSTRUCTION NOTES:

		QTY.
(1)	REMOVE AND LEGALLY DISPOSE OF EXISTING 8" VCP SEWER PIPE.	578 LF
(2)	CONSTRUCT 8" VCP EXTRA STRENGTH SEWER PIPE PER TECHNICAL SPECIFICATIONS AND TRENCH PER COLA DPW STD PLAN S-477-2 ON SHEET D-2.	1,653 LF
(3)	CONSTRUCT 10" VCP EXTRA STRENGTH SEWER PIPE PER TECHNICAL SPECIFICATIONS AND TRENCH PER COLA DPW STD PLAN S-477-2 ON SHEET D-2.	351 LF
(4)	CONSTRUCT 12" VCP EXTRA STRENGTH SEWER PIPE PER TECHNICAL SPECIFICATIONS AND TRENCH PER COLA DPW STD PLAN S-477-2 ON SHEET D-2.	281 LF
(5)	RECONNECT ALL LIVE SEWER LATERALS AFFECTED BY CONSTRUCTION.	5
(6)	PRESSURE WASH AND PROTECT EXISTING MANHOLE IN PLACE.	5
(7)	CLEAN EXISTING MANHOLE AND COAT MANHOLE INTERIOR WITH 125 MIL EPOXY/POLYURETHANE LINING SYSTEM INCLUDING THE BASE.	5
(8)	CONSTRUCT NEW 48-INCH DIAMETER PRECAST CONCRETE MANHOLE LINED WITH POLYURETHANE (SANCON 100 OR EQUAL) PER LACSD STD. 2003-2.	4
(9)	REMOVE AND REPLACE IN KIND EXISTING IMPROVEMENTS INCLUDING BUT NOT LIMITED TO CURB AND GUTTER, PCC SIDE WALK, TRAFFIC SIGNAL LOOP DETECTION, GRASS, AND OTHER LANDSCAPING.	-
(10)	JOIN EXISTING MANHOLE, REMOVE CONFLICTING SEWER PIPE, CORE DRILL AND RE-CHANNELIZE EXISTING BASE IF NECESSARY TO MAINTAIN EXISTING SEWER FLOWS DURING CONSTRUCTION PER DETAIL 2 ON SHEET D-2.	5
(11)	REMOVE EXISTING MANHOLE AND FILL, COVER AND RESURFACE SPECIFICATIONS AND TRENCH PER COLA DPW STD PLAN S-477-2 ON SHEET D-2.	1
(12)	CONSTRUCT NEW SEWER LATERAL. WYE PER LACDPW STANDARD 2025-2	3
(13)	REMOVE EXISTING INTERFERING PORTION OF ABANDONED SEWER AND PLUG BOTH ENDS	1

ABBREVIATIONS

∠PT.	ANGLE POINT	ID	INSIDE DIAMETER
ABAND.	ABANDONED UTILITY	INT.	INTERSECTION
AB	AGGREGATE BASE	INV.	INVERT
AC	ASPHALT CONCRETE	IRR.	IRRIGATION
ACP	ASBESTOS CEMENT PIPE	LT.	LEFT
APN	ASSESSOR'S PARCEL NUMBER	L	LENGTH
ASPH.	ASPHALT	LAT.	LATERAL
AV	AIR/VAC	L.F.	LINEAL FEET
AWWA	AMERICAN WATER WORKS ASSOCIATION	LG	LIP OF GUTTER
BCR	BEGINNING OF CURB RETURN	MH	MANHOLE
BC	BEGINNING OF CURVE	MAX.	MAXIMUM
BF	BLIND FLANGE	MIN.	MINIMUM
BFV	BUTTERFLY VALVE	N	NORTHERLY
BM	BENCH MARK	OD	OUTSIDE DIAMETER
BO	BLOW-OFF	PVMT	PAVEMENT
BOT.	BOTTOM	P/L	PROPERTY LINE
CATV	CABLE TELEVISION	PI	POINT OF INTERSECTION
CIP	CAST IRON PIPE	PRC	POINT OF REVERSE CURVATURE
CB	CATCH BASIN	PE	POLYETHYLENE
℄	CENTERLINE	PVC	POLYVINYL CHLORIDE PLASTIC PIPE
CO	CLEAN OUT	PP	POWER POLE
CLR	CLEARANCE	PSI	PRESSURE PER SQUARE INCH
CONC	CONCRETE	R	RADIUS
CONST	CONSTRUCTION	RR	RAIL ROAD
CMP	CORRUGATED METAL PIPE	RW	RECLAIMED WATER
CML&C	CEMENT MORTAR LINED AND COATED	RCB	REINFORCED CONCRETE BOX
DIA.	DIAMETER	RCP	REINFORCED CONCRETE PIPE
DIP	DUCTILE IRON PIPE	RT	RIGHT
DWG.	DRAWING	ROW	RIGHT-OF-WAY
E	EASTERLY OR ELECTRICAL	S	SLOPE OR SEWER
ELEC.	ELECTRICAL	SD	STORM DRAIN
ELEV.	ELEVATION	SS	SANITARY SEWER OR STAINLESS STEEL
ENC.	ENCASED	SSPWC	STANDARD SPECIFICATIONS FOR PUBLIC WORKS CONSTRUCTION
EC	END OF CURVE	SPEC'S	SPECIFICATIONS
EXIST.	EXISTING	STA.	STATION
FBE	FUSION BONDED EPOXY	STD.	STANDARD
FL	FLOW LINE	STL.	STEEL
FLG	FLANGE	TEL	TELEPHONE
FM	FORCE MAIN	TC	TOP OF CURB
FS	FINISH SURFACE	TYP.	TYPICAL
FG	FINISH GRADE	U.O.N.	UNLESS OTHERWISE NOTED
FUT.	FUTURE	VCP	VITRIFIED CLAY PIPE
G	GAS	VERT	VERTICAL
GB	GRADE BREAK	W	WATER
HORIZ	HORIZONTAL	WV	WATER VALVE
HWL	HIGH WATER LEVEL		

1 / M-9 — 1: DETAIL NUMBER; M-9: REFERENCE DRAWING NUMBER WHERE DETAIL/SECTION APPEARS (IF DASHED, THEN DETAIL OR SECTION IS ON SAME SHEET)

B / M-9 — B: SECTION LETTER; M-9: REFERENCE SHEET NUMBER WHERE SECTION APPEARS (IF DASHED, THEN DETAIL OR SECTION IS ON SAME SHEET)

SYMBOL LEGEND

- BLOCK WALL/BRICK WALL/HEAD WALL
- CABLE TELEVISION VALVE
- DRAIN ARROW
- D.I. DRAIN INLET
- EDGE OF PAVEMENT
- MHE ELECTRIC MANHOLE
- EM ELECTRIC METER
- ELECTRIC PULL BOX
- FH FIRE HYDRANT
- FP FLAG POLE
- GM GAS METER
- GV GAS VALVE
- GATE
- GRAVEL BAG
- G.P GUARD POST
- GUY WIRE
- HANDICAPPED
- -x-x-x- CHAIN LINK FENCE
- IRRIGATION CONTROL VALVE
- LIGHT STD.
- PP4759002E POWER POLE
- PP W/TRANS
- RR LIGHT
- SCO SEWER CLEAN OUT
- SMH SEWER MANHOLE
- SIGN
- SLOPE
- STORM DRAIN MANHOLE
- STREET LIGHT
- MHT TELCO MANHOLE
- TELCO PULL BOX
- TRAFFIC SIGNAL
- TREE
- TREE PALM
- VENT RISER
- WMH WATER MANHOLE
- WM WATER METER
- WV WATER VALVE
- -x-x- EXISTING FENCE
- -E- EXISTING POWER CABLE
- -TEL- EXISTING TELEPHONE CONDUIT
- -CTV- EXISTING UNDERGROUND T.V. CABLE
- -G- EXISTING GAS LINE – SIZE AS INDICATED ON PLAN
- -W- EXISTING WATERMAIN– SIZE AS INDICATED ON PLAN
- -S- EXISTING SANITARY SEWER–SIZE AS INDICATED ON PLAN
- -SD- EXISTING STORM DRAIN – SIZE AS INDICATED ON PLAN
- -UNK- UNKNOWN UTILITY
- -82.0- CONTOUR LINE
- -//-W-//-W- ABANDONED UTILITY
- -- -- -- PROPERTY LINE

CALL TOLL FREE 811 Know what's below. Call two working before you dig. Underground Service Alert

BENCH MARK

ELEVATIONS ARE REFERENCED TO NAVD88, UTILIZING GEOID12(A) AND DETERMINED LOCALLY BY GPS TIES TO LOS ANGELES COUNTY BENCHMARK "GY12603". THE BENCHMARKS IS A LEAD AND DISK STAMPED "LS8601". ELEVATION =245.039 SFT

GY12603 – L & LS TAG #8601 E'LY CB ROLLING HILLS RD. 0.7' S'LY OF ECR NE'LY COR CRENSHAW BLVD.

NO.	DATE	REVISIONS	ENGR.	APPROV.	DATE
6					
5					
4					
3					
2					
1					

DRAWN BY: RG — DATE: DEC-20
DESIGNED BY: DAM — DATE: DEC-20
CHECKED BY: LEB — DATE: MAY-23

REGISTERED PROFESSIONAL ENGINEER — LUANNE BEAN — CIVIL — STATE OF CALIFORNIA

PLANS PREPARED BY:
NV5
163 TECHNOLOGY DRIVE #100
IRVINE, CA 92618
TEL: (949) 585-0477
FAX: (949) 585-0433
WWW.NV5.COM

LUANNE BEAN, PE — C50129 — 06/30/25
CIVIL ENGINEER: — LICENSE NO. — EXP. DATE

CITY OF ROLLING HILLS
PUBLIC WORKS DEPARTMENT
8-INCH SEWER MAIN PORTUGUESE BEND/ROLLING HILLS ROAD
GENERAL NOTES ABBREVIATIONS AND LEGEND

DWG. NO. T-2
SHEET 2 OF 10

8-INCH SEWER PORTUGUESE BEND PROJECT

Z:\Rolling Hills\8 - Inch Sewer Main Portuguese Bend\Plans\CAD\SHT T-2.dwg 11/10/23 8:05am

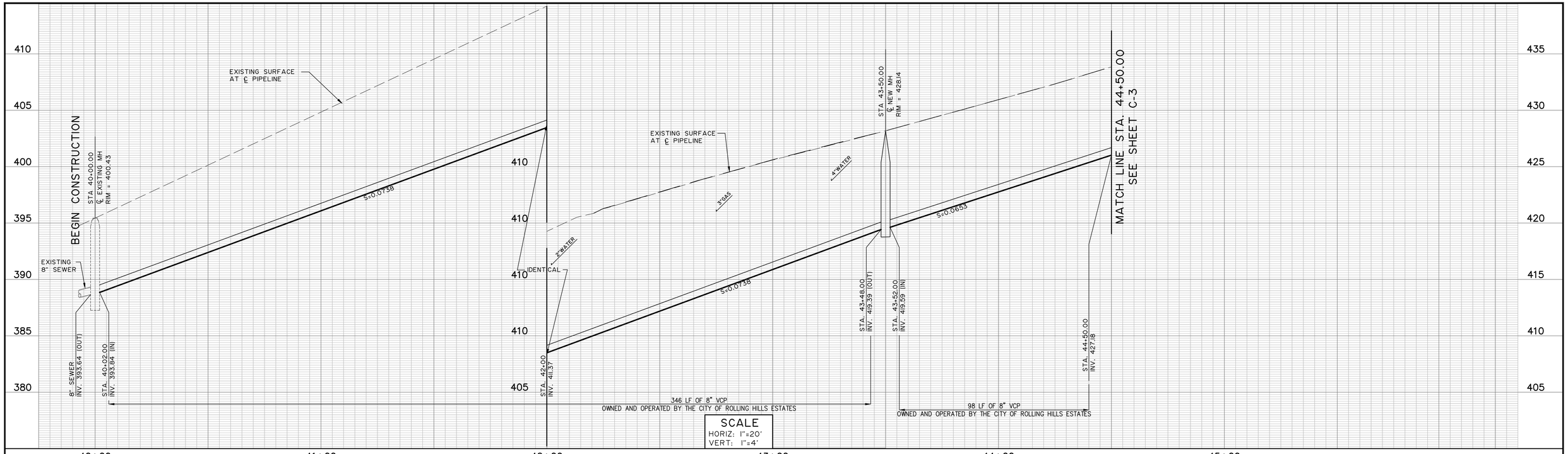

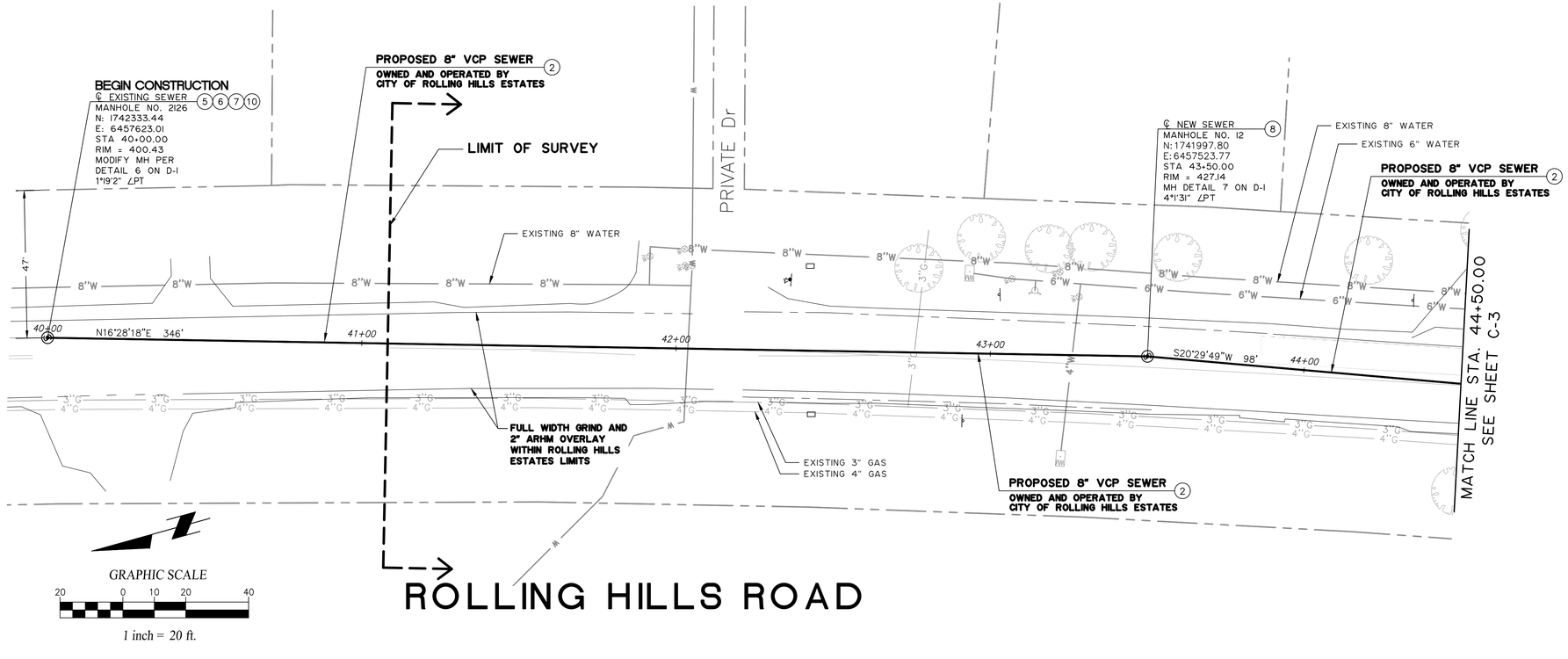

CONSTRUCTION NOTE

(2) CONSTRUCT 8" VCP EXTRA STRENGTH SEWER PIPE PER TECHNICAL SPECIFICATIONS AND TRENCH PER COLA DPW STD PLAN S-477-2 ON SHEET D-2.

(5) RECONNECT ALL LIVE SEWER LATERALS AFFECTED BY CONSTRUCTION.

(6) PRESSURE WASH AND PROTECT EXISTING MANHOLE IN PLACE.

(7) CLEAN EXISTING MANHOLE AND COAT MANHOLE INTERIOR WITH 125 MIL EPOXY/POLYURETHANE LINING SYSTEM INCLUDING THE BASE.

(8) CONSTRUCT NEW 48-INCH DIAMETER PRECAST CONCRETE MANHOLE LINED WITH POLYURETHANE (SANCON 100 OR EQUAL) PER LACSD STD. 2003-2.

(10) JOIN EXISTING MANHOLE, REMOVE CONFLICTING SEWER PIPE, CORE DRILL AND RE-CHANNELIZE EXISTING BASE IF NECESSARY TO MAINTAIN EXISTING SEWER FLOWS DURING CONSTRUCTION PER DETAIL 2 ON SHEET D-2.

NOTE TO CONTRACTOR

1. CONTRACTOR TO VERIFY ALL EXISTING UTILITIES BEFORE ANY CONSTRUCTION.
2. CONTRACTOR TO CCTV THE EXISTING SEWER PRIOR TO CONSTRUCTION AND VERIFY THE LOCATION OF ALL ACTIVE LATERALS AND CLEAN SEWER MAIN LINE AS NECESSARY TO HAVE A FUNCTIONAL SEWER SYSTEM BEFORE ANY CONSTRUCTION.
3. CONTRACTOR SHALL MAINTAIN EXISTING SEWER FLOWS AT ALL TIMES DURING CONSTRUCTION.
4. CONTRACTOR SHALL VERIFY THE DEPTH OF GROUNDWATER AND SUBMIT A DEWATERING PLAN IN ACCORDANCE WITH DEWATERING SPECIFICATIONS.

CALL TOLL FREE 811 Know what's below. Call two working before you dig. Underground Service Alert

BENCH MARK

ELEVATIONS ARE REFERENCED TO NAVD88, UTILIZING GEOID12(A) AND DETERMINED LOCALLY BY GPS TIES TO LOS ANGELES COUNTY BENCHMARK "GY12603". THE BENCHMARKS IS A LEAD AND DISK STAMPED "LS8601". ELEVATION =245.039 SFT

GY12603 – L & LS TAG #8601 E'LY CB ROLLING HILLS RD. 0.7' S'LY OF ECR NE'LY COR CRENSHAW BLVD.

NO.	DATE	REVISIONS	ENGR.	APPROV.	DATE
6					
5					
4					
3					
2					
1					

DRAWN BY: RG — DATE DEC-20
DESIGNED BY: DAM — DATE DEC-20
CHECKED BY: LEB — DATE MAY-23

REGISTERED PROFESSIONAL ENGINEER — LUANNE BEAN — CIVIL — STATE OF CALIFORNIA

PLANS PREPARED BY:
NV5
WWW.NV5.COM
163 TECHNOLOGY DRIVE #100
IRVINE, CA 92618
TEL. (949) 585-0477
FAX. (949) 585-0433

LUANNE BEAN, PE — C50129 — 06/30/25
CIVIL ENGINEER: — LICENSE NO. — EXP. DATE

CITY OF ROLLING HILLS
PUBLIC WORKS DEPARTMENT

8-INCH SEWER MAIN PORTUGUESE BEND/ROLLING HILLS ROAD
PLAN AND PROFILE STA. 40+00.00 TO 44+50.00

DWG. NO. C-1

SHEET 3 OF 10

8-INCH SEWER PORTUGUESE BEND PROJECT

Z:\Rolling Hills\8 -inch Sewer Main Portuguese Bend\Plans\CAD\SHEET C-1.dwg 11/10/23 8:05am

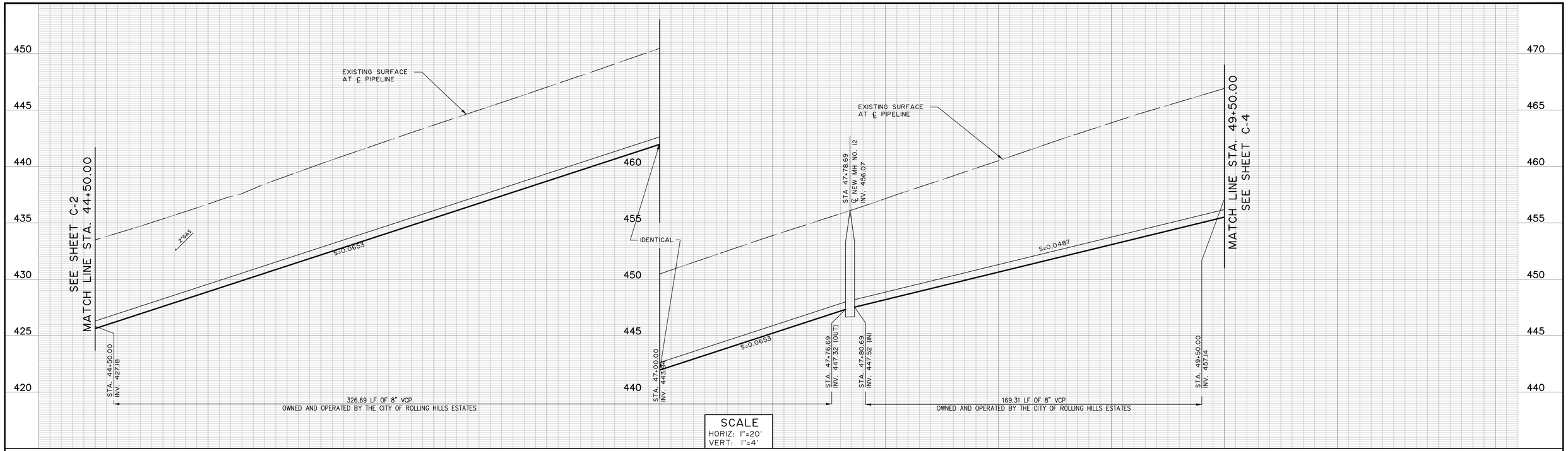

SCALE
HORIZ: 1"=20'
VERT: 1"=4'

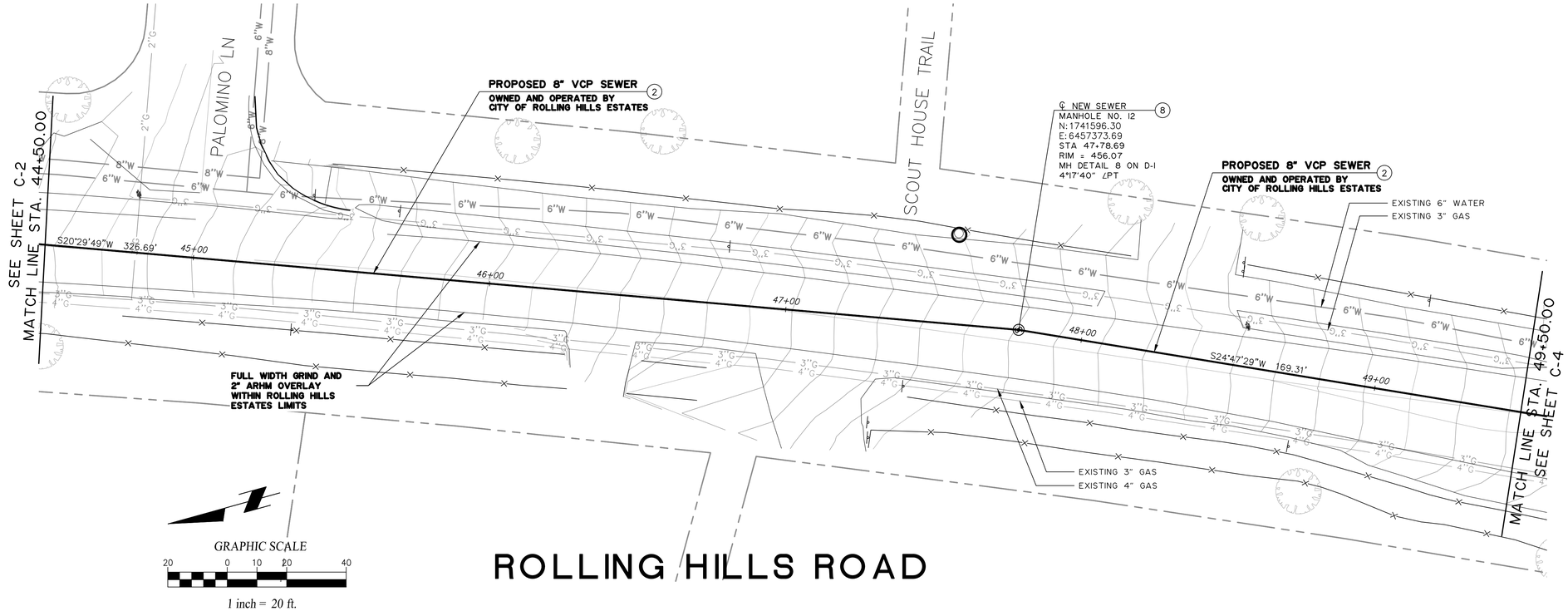

ROLLING HILLS ROAD

CONSTRUCTION NOTE

(2) CONSTRUCT 8" VCP EXTRA STRENGTH SEWER PIPE PER TECHNICAL SPECIFICATIONS AND TRENCH PER COLA DPW STD PLAN S-477-2 ON SHEET D-2.

(8) CONSTRUCT NEW 48-INCH DIAMETER PRECAST CONCRETE MANHOLE LINED WITH POLYURETHANE (SANCON 100 OR EQUAL) PER LACSD STD. 2003-2.

NOTE TO CONTRACTOR

1. CONTRACTOR TO VERIFY ALL EXISTING UTILITIES BEFORE ANY CONSTRUCTION.
2. CONTRACTOR TO CCTV THE EXISTING SEWER PRIOR TO CONSTRUCTION AND VERIFY THE LOCATION OF ALL ACTIVE LATERALS AND CLEAN SEWER MAIN LINE AS NECESSARY TO HAVE A FUNCTIONAL SEWER SYSTEM BEFORE ANY CONSTRUCTION.
3. CONTRACTOR SHALL MAINTAIN EXISTING SEWER FLOWS AT ALL TIMES DURING CONSTRUCTION.
4. CONTRACTOR SHALL VERIFY THE DEPTH OF GROUNDWATER AND SUBMIT A DEWATERING PLAN IN ACCORDANCE WITH DEWATERING SPECIFICATIONS.

CALL TOLL FREE 811
Know what's below. Call two working before you dig.
Underground Service Alert

BENCH MARK

ELEVATIONS ARE REFERENCED TO NAVD88, UTILIZING GEOID12(A) AND DETERMINED LOCALLY BY GPS TIES TO LOS ANGELES COUNTY BENCHMARK "GY12603". THE BENCHMARKS IS A LEAD AND DISK STAMPED "LS8601". ELEVATION =245.039 SFT

GY12603 – L & LS TAG #8601 E'LY CB ROLLING HILLS RD. 0.7' S'LY OF ECR NE'LY COR CRENSHAW BLVD.

NO.	DATE	REVISIONS	ENGR.	APPROV.	DATE
6					
5					
4					
3					
2					
1					

DRAWN BY: RG — DATE: DEC-20
DESIGNED BY: DAM — DATE: DEC-20
CHECKED BY: LEB — DATE: MAY-23

REGISTERED PROFESSIONAL ENGINEER — LUANNE BEAN — CIVIL — STATE OF CALIFORNIA

PLANS PREPARED BY:
NV5
WWW.NV5.COM
163 TECHNOLOGY DRIVE #100
IRVINE, CA 92618
TEL. (949) 585-0477
FAX. (949) 585-0433

LUANNE BEAN, PE — C50129 — 06/30/25
CIVIL ENGINEER: — LICENSE NO. — EXP. DATE

CITY OF ROLLING HILLS
PUBLIC WORKS DEPARTMENT

8-INCH SEWER MAIN PORTUGUESE BEND/ROLLING HILLS ROAD
PLAN AND PROFILE STA. 44+50.00 TO 49+50.00

DWG. NO. C-2
SHEET 4 OF 10

8-INCH SEWER PORTUGUESE BEND PROJECT

Z:\Rolling Hills\8-inch Sewer Main Portuguese Bend\Plans\CAD\SHEET C-2.dwg 11/10/23 8:05am

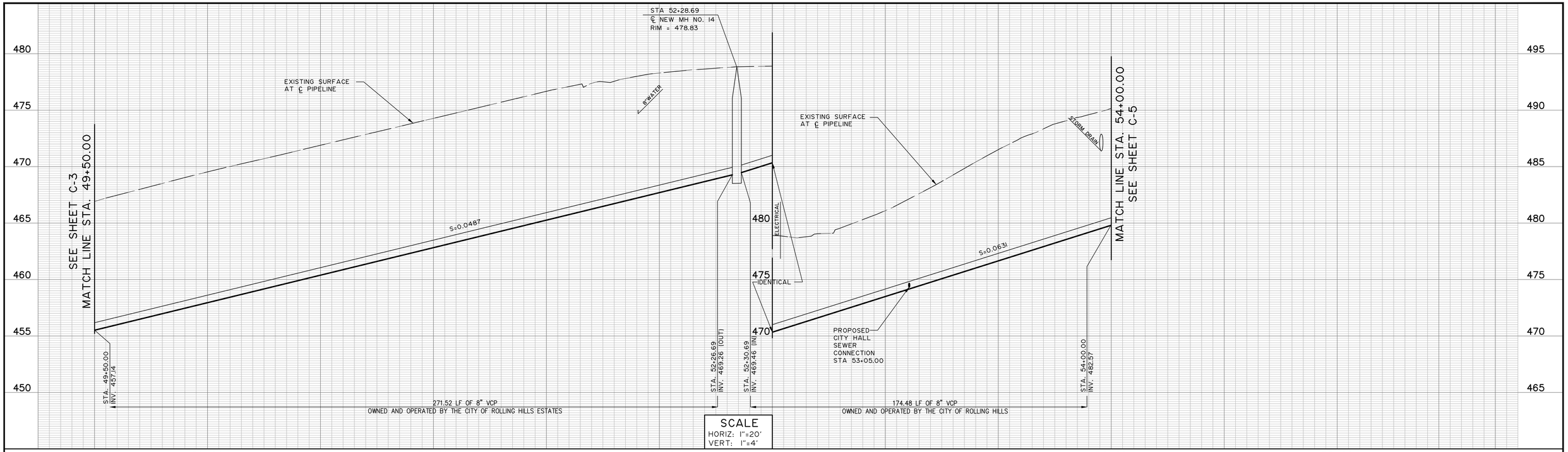

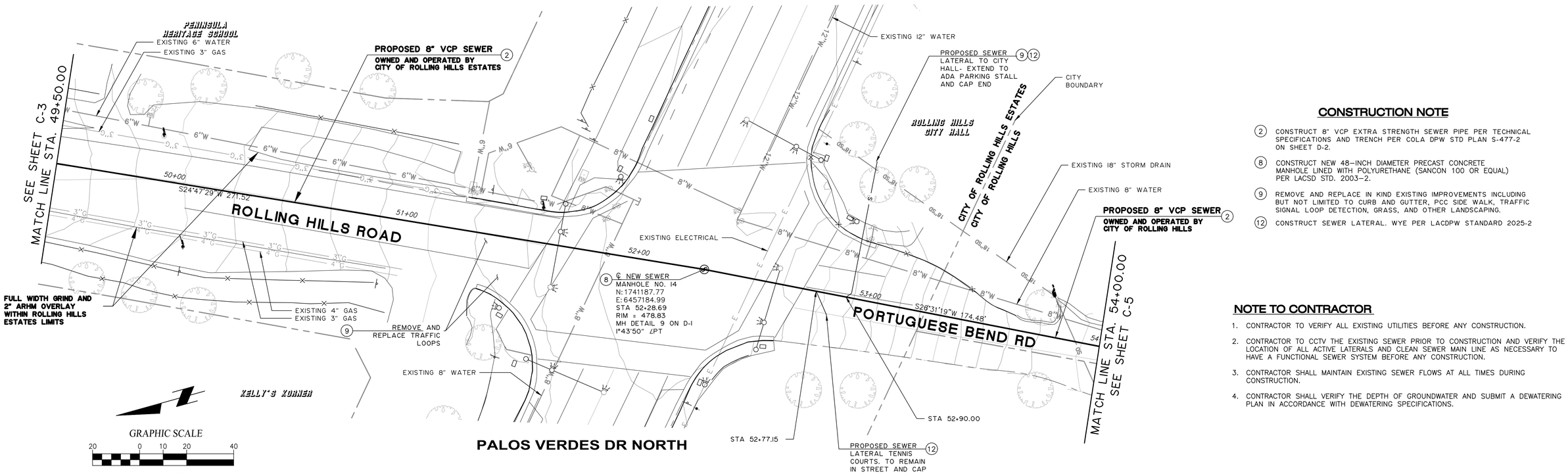

CONSTRUCTION NOTE

(2) CONSTRUCT 8" VCP EXTRA STRENGTH SEWER PIPE PER TECHNICAL SPECIFICATIONS AND TRENCH PER COLA DPW STD PLAN S-477-2 ON SHEET D-2.

(8) CONSTRUCT NEW 48-INCH DIAMETER PRECAST CONCRETE MANHOLE LINED WITH POLYURETHANE (SANCON 100 OR EQUAL) PER LACSD STD. 2003-2.

(9) REMOVE AND REPLACE IN KIND EXISTING IMPROVEMENTS INCLUDING BUT NOT LIMITED TO CURB AND GUTTER, PCC SIDE WALK, TRAFFIC SIGNAL LOOP DETECTION, GRASS, AND OTHER LANDSCAPING.

(12) CONSTRUCT SEWER LATERAL. WYE PER LACDPW STANDARD 2025-2

NOTE TO CONTRACTOR

1. CONTRACTOR TO VERIFY ALL EXISTING UTILITIES BEFORE ANY CONSTRUCTION.
2. CONTRACTOR TO CCTV THE EXISTING SEWER PRIOR TO CONSTRUCTION AND VERIFY THE LOCATION OF ALL ACTIVE LATERALS AND CLEAN SEWER MAIN LINE AS NECESSARY TO HAVE A FUNCTIONAL SEWER SYSTEM BEFORE ANY CONSTRUCTION.
3. CONTRACTOR SHALL MAINTAIN EXISTING SEWER FLOWS AT ALL TIMES DURING CONSTRUCTION.
4. CONTRACTOR SHALL VERIFY THE DEPTH OF GROUNDWATER AND SUBMIT A DEWATERING PLAN IN ACCORDANCE WITH DEWATERING SPECIFICATIONS.

CALL TOLL FREE 811
Know what's below. Call two working before you dig.
Underground Service Alert

BENCH MARK

ELEVATIONS ARE REFERENCED TO NAVD88, UTILIZING GEOID12(A) AND DETERMINED LOCALLY BY GPS TIES TO LOS ANGELES COUNTY BENCHMARK "GY12603". THE BENCHMARKS IS A LEAD AND DISK STAMPED "LS8601". ELEVATION =245.039 SFT

GY12603 – L & LS TAG #8601 E'LY CB ROLLING HILLS RD. 0.7' S'LY OF ECR NE'LY COR CRENSHAW BLVD.

NO.	DATE	REVISIONS	ENGR.	APPROV.	DATE
6					
5					
4					
3					
2					
1					

DRAWN BY: RG — DATE DEC-20
DESIGNED BY: DAM — DATE DEC-20
CHECKED BY: LEB — DATE MAY-23

REGISTERED PROFESSIONAL ENGINEER — LUANNE BEAN — CIVIL — STATE OF CALIFORNIA

PLANS PREPARED BY:
NV5
WWW.NV5.COM
163 TECHNOLOGY DRIVE #100
IRVINE, CA 92618
TEL. (949) 585-0477
FAX. (949) 585-0433
LUANNE BEAN, PE C50129 06/30/25
CIVIL ENGINEER: LICENSE NO. EXP. DATE

CITY OF ROLLING HILLS
PUBLIC WORKS DEPARTMENT

8-INCH SEWER MAIN PORTUGUESE BEND/ROLLING HILLS ROAD

PLAN AND PROFILE STA. 49+50.00 TO 54+00.00

DWG. NO. C-3

SHEET 5 OF 10

8-INCH SEWER PORTUGUESE BEND PROJECT

Z:\Rolling Hills\8 -inch Sewer Main Portuguese Bend\Plans\CAD\SHEET C-3.dwg 11/10/23 8:05am

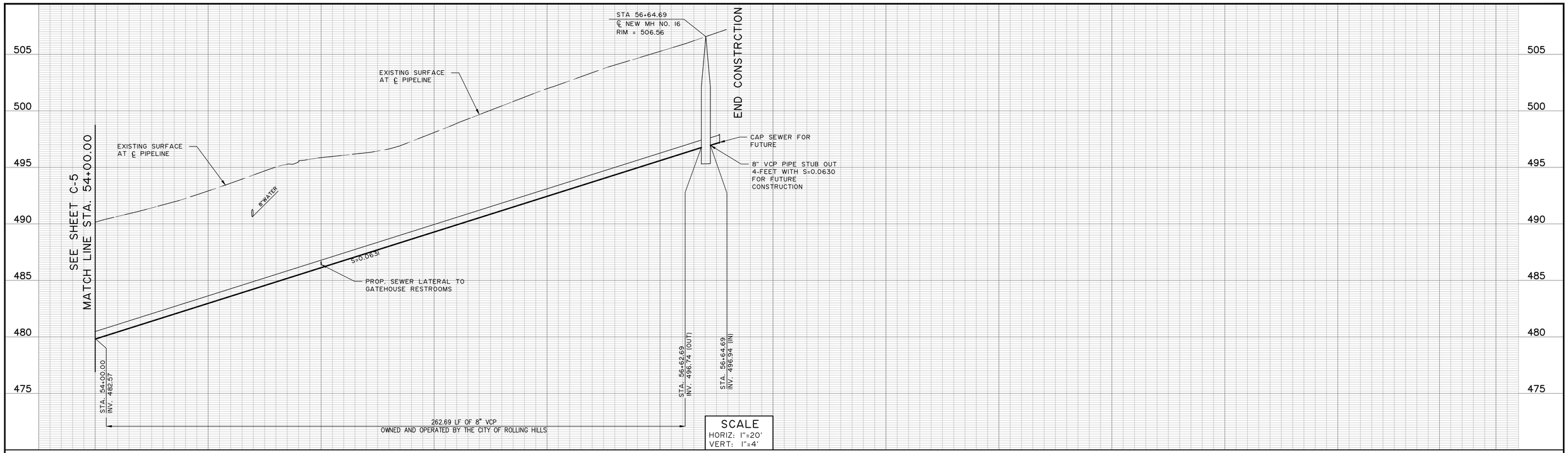

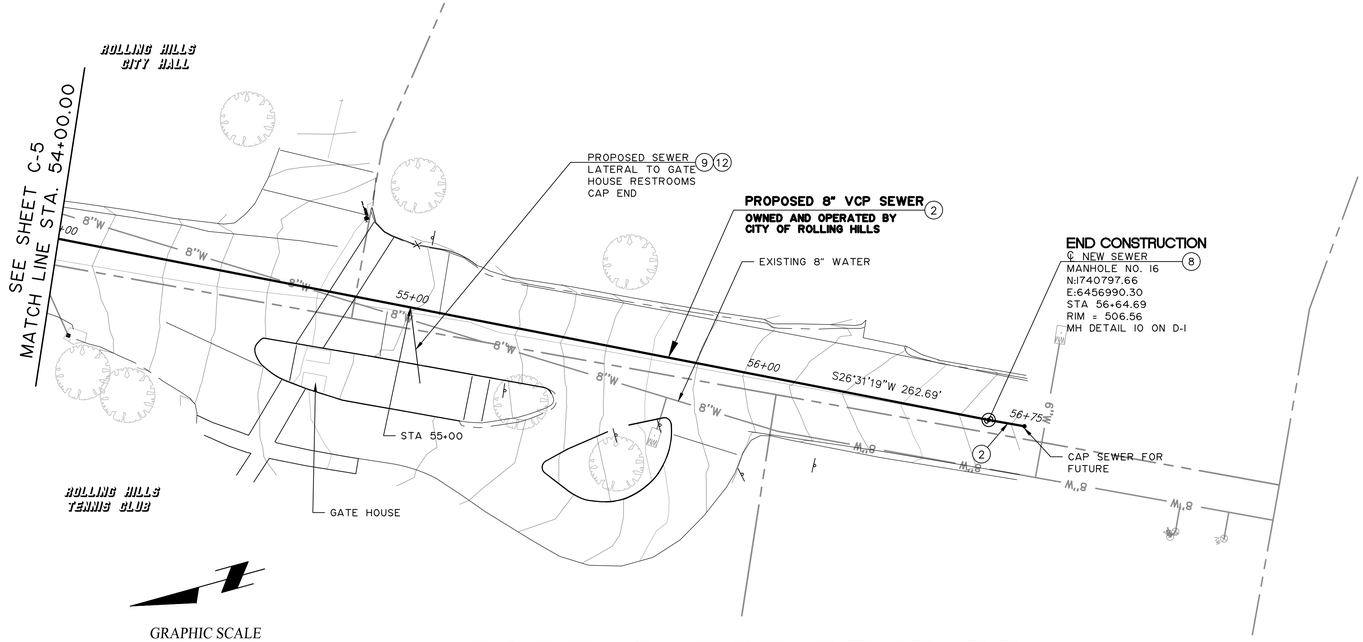

PORTUGUESE BEND RD

CONSTRUCTION NOTE

(2) CONSTRUCT 8" VCP EXTRA STRENGTH SEWER PIPE PER TECHNICAL SPECIFICATIONS AND TRENCH PER COLA DPW STD PLAN S-477-2 ON SHEET D-2.

(8) CONSTRUCT NEW 48-INCH DIAMETER PRECAST CONCRETE MANHOLE LINED WITH POLYURETHANE (SANCON 100 OR EQUAL) PER LACSD STD. 2003-2.

(9) REMOVE AND REPLACE IN KIND EXISTING IMPROVEMENTS INCLUDING BUT NOT LIMITED TO CURB AND GUTTER, PCC SIDE WALK, TRAFFIC SIGNAL LOOP DETECTION, GRASS, AND OTHER LANDSCAPING.

(12) CONSTRUCT SEWER LATERAL. WYE PER LACDPW STANDARD 2025-2

NOTE TO CONTRACTOR

1. CONTRACTOR TO VERIFY ALL EXISTING UTILITIES BEFORE ANY CONSTRUCTION.
2. CONTRACTOR TO CCTV THE EXISTING SEWER PRIOR TO CONSTRUCTION AND VERIFY THE LOCATION OF ALL ACTIVE LATERALS AND CLEAN SEWER MAIN LINE AS NECESSARY TO HAVE A FUNCTIONAL SEWER SYSTEM BEFORE ANY CONSTRUCTION.
3. CONTRACTOR SHALL MAINTAIN EXISTING SEWER FLOWS AT ALL TIMES DURING CONSTRUCTION.
4. CONTRACTOR SHALL VERIFY THE DEPTH OF GROUNDWATER AND SUBMIT A DEWATERING PLAN IN ACCORDANCE WITH DEWATERING SPECIFICATIONS.

CALL TOLL FREE 811
Know what's below. Call two working before you dig.
Underground Service Alert

BENCH MARK

ELEVATIONS ARE REFERENCED TO NAVD88, UTILIZING GEOID12(A) AND DETERMINED LOCALLY BY GPS TIES TO LOS ANGELES COUNTY BENCHMARK "GY12603". THE BENCHMARKS IS A LEAD AND DISK STAMPED "LS8601". ELEVATION =245.039 SFT

GY12603 – L & LS TAG #8601 E'LY CB ROLLING HILLS RD. 0.7' S'LY OF ECR NE'LY COR CRENSHAW BLVD.

NO.	DATE	REVISIONS	ENGR.	APPROV.	DATE
6					
5					
4					
3					
2					
1					

DRAWN BY: RG — DATE DEC-20
DESIGNED BY: DAM — DATE DEC-20
CHECKED BY: LEB — DATE MAY-23

REGISTERED PROFESSIONAL ENGINEER — LUANNE BEAN — CIVIL — STATE OF CALIFORNIA

PLANS PREPARED BY:
NV5
WWW.NV5.COM
163 TECHNOLOGY DRIVE #100
IRVINE, CA 92618
TEL. (949) 585-0477
FAX. (949) 585-0433

LUANNE BEAN, PE — C50129 — 06/30/25
CIVIL ENGINEER: — LICENSE NO. EXP. DATE

CITY OF ROLLING HILLS
PUBLIC WORKS DEPARTMENT

8-INCH SEWER MAIN PORTUGUESE BEND/ROLLING HILLS ROAD

PLAN AND PROFILE STA. 54+00.00 TO 57+00±

DWG. NO. C-4

SHEET 6 OF 10

8-INCH SEWER PORTUGUESE BEND PROJECT

Z:\Rolling Hills\8-inch Sewer Main Portuguese Bend\Plans\CAD\SHEET C-4.dwg 11/10/23 8:05am

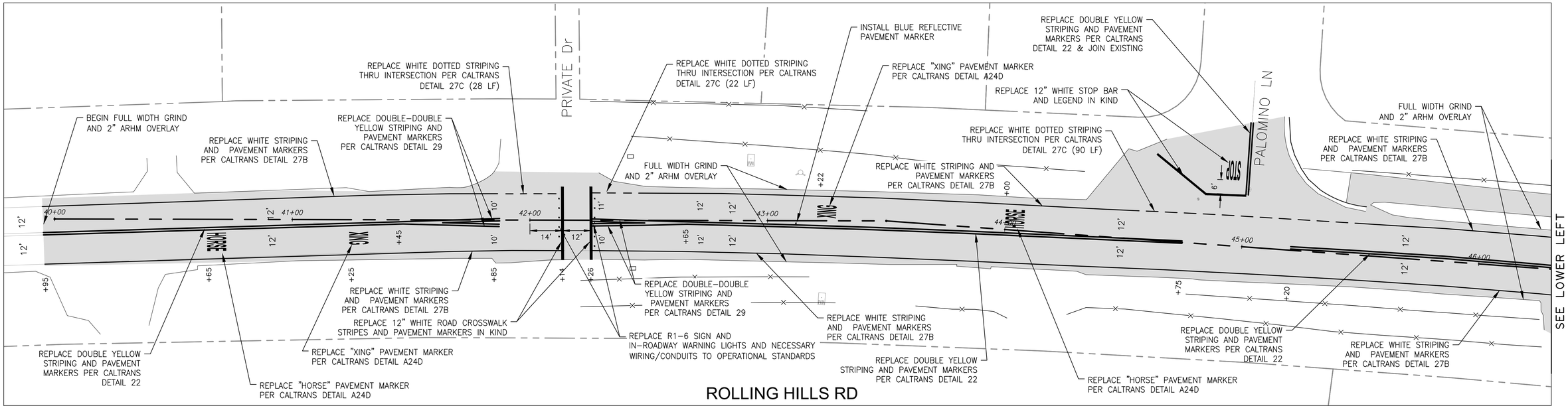

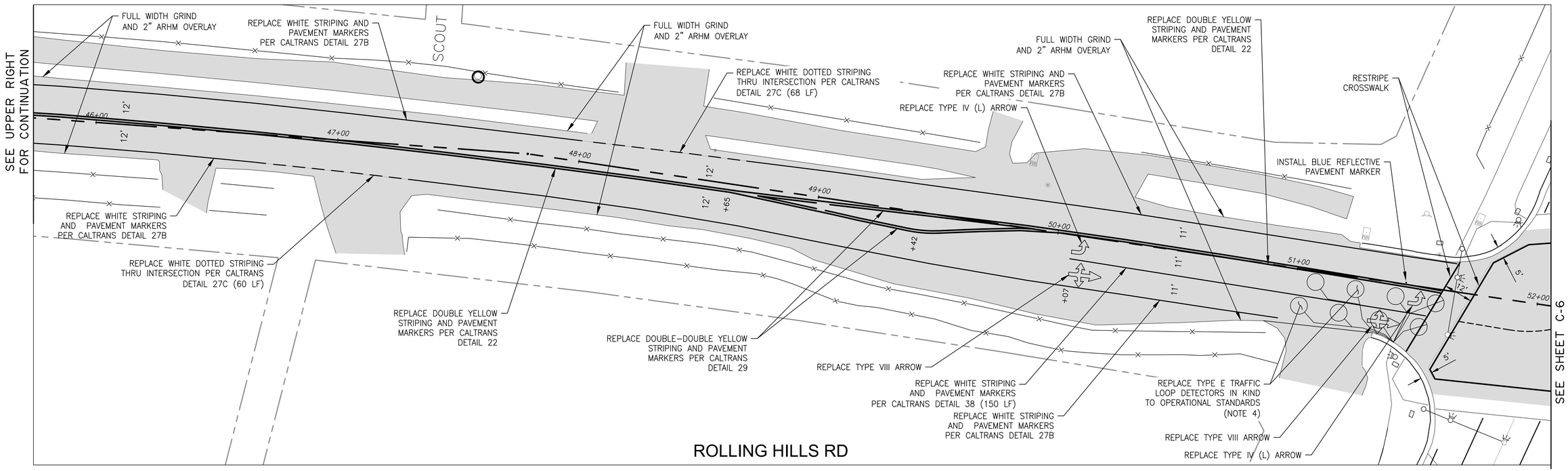

NOTES:

1. CONTRACTOR TO INSTALL TRAFFIC SIGNS, STRIPING AND TRAFFIC LOOP SYSTEMS PER THE LATEST EDITIONS OF THE CALTRANS STANDARD PLANS AND THE CALIFORNIA MANUAL ON UNIFORM TRAFFIC CONTROL DEVICES (CA MUTCD).
2. STRIPING AND PAVEMENT MARKINGS SHALL BE PAINT, 3 COATS UNLESS OTHERWISE NOTED.
3. INSTALL TWO-WAY BLUE REFLECTIVE MARKERS NEAR THE CENTERLINE STRIPE ADJACENT TO EACH FIRE HYDRANT.
4. INDUCTIVE DETECTOR LOOPS SHALL BE 6' DIAMETER TYPE 'E' AND CENTERED IN TRAVEL LANE WITH 10' SPACING BETWEEN LOOPS IN THE DIRECTION OF TRAVEL. LIMIT LINE LOOPS SHALL BE CASE II VEHICLE AND BICYCLE DETECTOR LOOPS PER LADOT STANDARDS. PLACE LIMIT LINE LOOPS 2' INTO CROSSWALK OR LIMIT LINE.

GRAPHIC SCALE

20 0 10 20 40

1 inch = 20 ft.

CALL TOLL FREE 811 Know what's below. Call two working before you dig. Underground Service Alert

BENCH MARK

ELEVATIONS ARE REFERENCED TO NAVD88, UTILIZING GEOID12(A) AND DETERMINED LOCALLY BY GPS TIES TO LOS ANGELES COUNTY BENCHMARK "GY12603". THE BENCHMARKS IS A LEAD AND DISK STAMPED "LS8601". ELEVATION =245.039 SFT

GY12603 – L & LS TAG #8601 E'LY CB ROLLING HILLS RD. 0.7' S'LY OF ECR NE'LY COR CRENSHAW BLVD.

NO.	DATE	REVISIONS	ENGR.	APPROV.	DATE
6					
5					
4					
3					
2					
1					

DRAWN BY: RG — DATE DEC-20
DESIGNED BY: DAM — DATE DEC-20
CHECKED BY: LEB — DATE MAY-23

REGISTERED PROFESSIONAL ENGINEER LUANNE BEAN CIVIL STATE OF CALIFORNIA

PLANS PREPARED BY:
NV5
WWW.NV5.COM
163 TECHNOLOGY DRIVE #100
IRVINE, CA 92618
TEL. (949) 585-0477
FAX. (949) 585-0433
LUANNE BEAN, PE C50129 06/30/25
CIVIL ENGINEER: LICENSE NO. EXP. DATE

CITY OF ROLLING HILLS
PUBLIC WORKS DEPARTMENT

8-INCH SEWER MAIN PORTUGUESE BEND/ROLLING HILLS ROAD
REPAVEMENT AND MARKINGS

DWG. NO. C-5

SHEET 7 OF 10

8-INCH SEWER PORTUGUESE BEND PROJECT

Z:\Rolling Hills\8 - Inch Sewer Main Portuguese Bend\Plans\CAD\SHEET C-5.dwg 11/10/23 8:05am

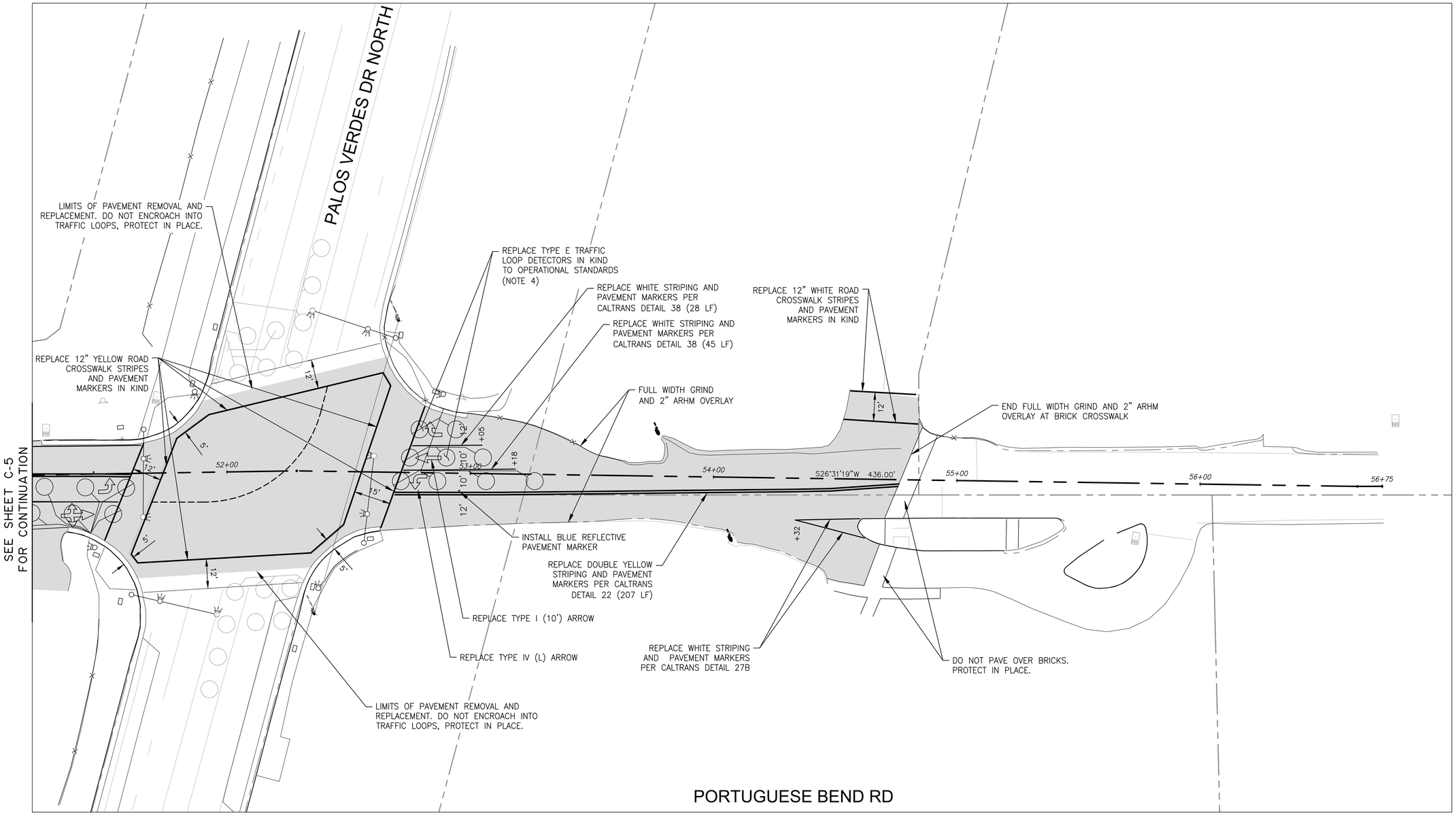

NOTES:

1. CONTRACTOR TO INSTALL TRAFFIC SIGNS, STRIPING AND TRAFFIC LOOP SYSTEMS PER THE LATEST EDITIONS OF THE CALTRANS STANDARD PLANS AND THE CALIFORNIA MANUAL ON UNIFORM TRAFFIC CONTROL DEVICES (CA MUTCD).
2. STRIPING AND PAVEMENT MARKINGS SHALL BE PAINT, 3 COATS UNLESS OTHERWISE NOTED.
3. INSTALL TWO-WAY BLUE REFLECTIVE MARKERS NEAR THE CENTERLINE STRIPE ADJACENT TO EACH FIRE HYDRANT.
4. INDUCTIVE DETECTOR LOOPS SHALL BE 6' DIAMETER TYPE "E" AND CENTERED IN TRAVEL LANE WITH 10' SPACING BETWEEN LOOPS IN THE DIRECTION OF TRAVEL. LIMIT LINE LOOPS SHALL BE CASE II VEHICLE AND BICYCLE DETECTOR LOOPS PER LADOT STANDARDS. PLACE LIMIT LINE LOOPS 2' INTO CROSSWALK OR LIMIT LINE.

GRAPHIC SCALE
20 0 10 20 40
1 inch = 20 ft.

CALL TOLL FREE 811
Know what's below. Call two working before you dig.
Underground Service Alert

BENCH MARK

ELEVATIONS ARE REFERENCED TO NAVD88, UTILIZING GEOID12(A) AND DETERMINED LOCALLY BY GPS TIES TO LOS ANGELES COUNTY BENCHMARK "GY12603". THE BENCHMARKS IS A LEAD AND DISK STAMPED "LS8601". ELEVATION =245.039 SFT

GY12603 – L & LS TAG #8601 E'LY CB ROLLING HILLS RD. 0.7' S'LY OF ECR NE'LY COR CRENSHAW BLVD.

NO.	DATE	REVISIONS	ENGR.	APPROV.	DATE
6					
5					
4					
3					
2					
1					

DRAWN BY: RG — DATE DEC-20
DESIGNED BY: DAM — DATE DEC-20
CHECKED BY: LEB — DATE MAY-23

REGISTERED PROFESSIONAL ENGINEER — LUANNE BEAN — CIVIL — STATE OF CALIFORNIA

PLANS PREPARED BY:
NV5
163 TECHNOLOGY DRIVE #100
IRVINE, CA 92618
TEL. (949) 585-0477
FAX. (949) 585-0433
WWW.NV5.COM
LUANNE BEAN, PE C50129 06/30/25
CIVIL ENGINEER: LICENSE NO. EXP. DATE

CITY OF ROLLING HILLS
PUBLIC WORKS DEPARTMENT

8-INCH SEWER MAIN PORTUGUESE BEND/ROLLING HILLS ROAD
REPAVEMENT AND MARKINGS

DWG. NO. C-6

SHEET 8 OF 10

8-INCH SEWER PORTUGUESE BEND PROJECT

Z:\Rolling Hills\8 -inch Sewer Main Portuguese Bend\Plans\CAD\SHEET C-6.dwg 11/10/23 8:05am

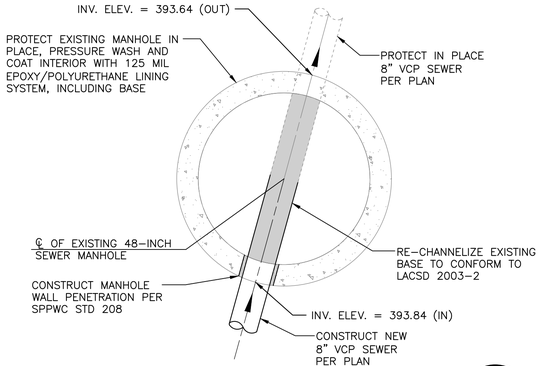

STA. 40+00 SEWER MANHOLE DETAIL — 6 / –

NOT TO SCALE

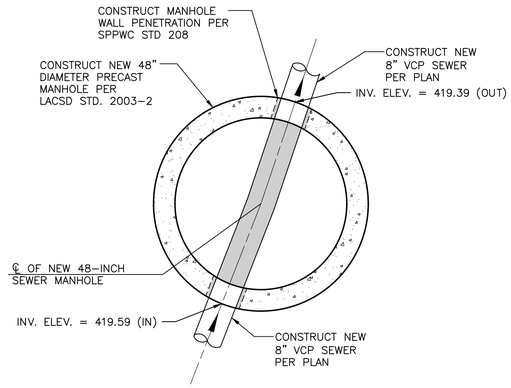

STA. 43+50 SEWER MANHOLE DETAIL — 7 / –

NOT TO SCALE

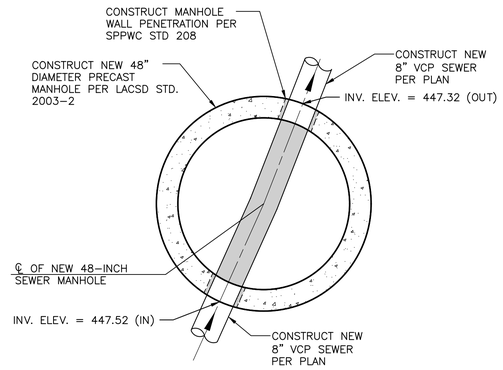

STA. 47+78.69 SEWER MANHOLE DETAIL — 8 / –

NOT TO SCALE

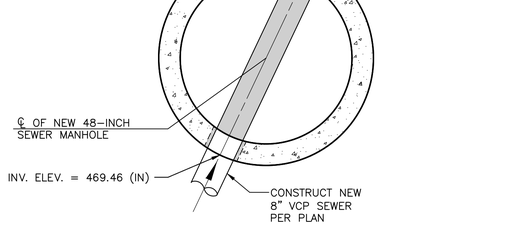

STA. 52+28.69 SEWER MANHOLE DETAIL — 9 / –

NOT TO SCALE

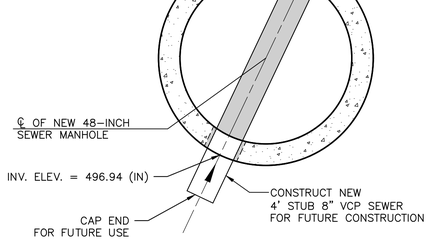

STA. 56+70± SEWER MANHOLE DETAIL — 10 / –

NOT TO SCALE

CALL TOLL FREE 811 Know what's below. Call two working before you dig. Underground Service Alert

BENCH MARK

ELEVATIONS ARE REFERENCED TO NAVD88, UTILIZING GEOID12(A) AND DETERMINED LOCALLY BY GPS TIES TO LOS ANGELES COUNTY BENCHMARK "GY12603". THE BENCHMARKS IS A LEAD AND DISK STAMPED "LS8601". ELEVATION =245.039 SFT

GY12603 – L & LS TAG #8601 E'LY CB ROLLING HILLS RD. 0.7' S'LY OF ECR NE'LY COR CRENSHAW BLVD.

NO.	DATE	REVISIONS	ENGR.	APPROV.	DATE
6					
5					
4					
3					
2					
1					

DRAWN BY: RG — DATE DEC–20

DESIGNED BY: DAM — DATE DEC–20

CHECKED BY: LEB — DATE MAY–23

REGISTERED PROFESSIONAL ENGINEER — LUANNE BEAN — CIVIL — STATE OF CALIFORNIA

PLANS PREPARED BY:
NV5
WWW.NV5.COM
163 TECHNOLOGY DRIVE #100
IRVINE, CA 92618
TEL. (949) 585–0477
FAX. (949) 585–0433
LUANNE BEAN, PE — C50129 — 06/30/25
CIVIL ENGINEER: — LICENSE NO. — EXP. DATE

CITY OF ROLLING HILLS
PUBLIC WORKS DEPARTMENT

8-INCH SEWER MAIN PORTUGUESE BEND/ROLLING HILLS ROAD

DETAILS

DWG. NO. D-1

SHEET 9 OF 10

8-INCH SEWER PORTUGUESE BEND PROJECT

Z:\Rolling Hills\8 –inch Sewer Main Portuguese Bend\Plans\CAD\SHT D–1.dwg 11/10/23 8:05am

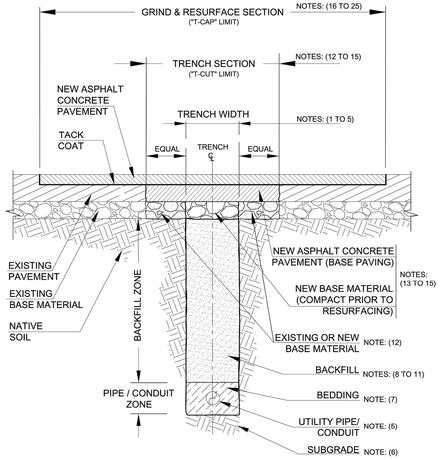

T-TRENCH AND RESTORATION DETAIL
ASPHALT CONCRETE STREETS

NOT TO SCALE

BUREAU OF ENGINEERING	DEPARTMENT OF PUBLIC WORKS	CITY OF LOS ANGELES
T-TRENCH AND PAVEMENT RESTORATION - ASPHALT CONCRETE STREETS		STANDARD PLAN S-477-2

PREPARED	SUBMITTED	APPROVED	SUPERSEDES	REFERENCES
AURORA R. GADBURY, BUREAU OF ENGINEERING	EDWARD ARRINGTON, S.E., ENGINEER OF DESIGN	02/07/2019	B-4768	
CHECKED: MATI LAAN, BUREAU OF ENGINEERING	KENNETH R. REED, P.E., DEPUTY CITY ENGINEER	GARY LEE MOORE, P.E., CITY ENGINEER	VAULT INDEX NUMBER: B-4778	
			SHEET 1 OF 4 SHEETS	

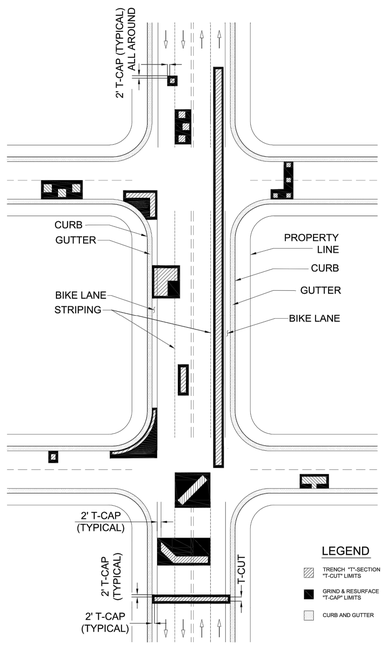

FIGURE 1
EXAMPLES OF GRIND AND RESURFACE "T-CAP" LIMITS

NOT TO SCALE

STANDARD PLAN NO. S-477-2 | VAULT INDEX NUMBER B-4778 | SHEET 2 OF 4 SHEETS

NOTES:

ALL WORK SHALL BE CONSTRUCTED IN ACCORDANCE WITH THE LATEST STANDARD SPECIFICATIONS FOR PUBLIC WORKS CONSTRUCTION (SSPWC) "GREENBOOK" ADOPTED BY THE BOARD OF PUBLIC WORKS AS AMENDED BY THE LATEST CORRESPONDING CITY OF LOS ANGELES DEPARTMENT OF PUBLIC WORKS "BROWNBOOK".

LIMITS OF REMOVALS, TRENCH WIDTH:

1. ALL PAVEMENT REMOVED SHALL HAVE STRAIGHT EDGES. CUTS SHALL BE MADE TO A MINIMUM DEPTH OF ONE AND A HALF (1-1/2) INCHES. ALL CUTS SHALL BE NEAT, STRAIGHT, VERTICAL CUTS WITH NO BROKEN EDGES.
2. ALL LONGITUDINAL PAVEMENT CUTS SHALL BE UNINTERRUPTED APPROXIMATELY PARALLEL TO THE TRENCH (MAX. 1:6 LONGITUDINAL VARIANCE).
3. IF A SAW CUT IN PAVEMENT FALLS WITHIN 1 FOOT OF AN EXISTING CURB, GUTTER, OR EDGE OF PAVEMENT, THE ADDITIONAL PAVEMENT SHALL BE REMOVED AND RECONSTRUCTED.
4. WHEN SAW CUTTING PAVEMENT, THE MAXIMUM OVERRUN ALLOWED FOR ANY SAW CUT BEYOND THE BOUNDARY REMOVAL LIMITS OF EXISTING PAVEMENT SHALL BE 2 INCHES.
5. TRENCH WIDTH SHALL BE MINIMUM 24 INCHES, UNLESS SLURRY BACKFILL AND BEDDING IS USED, IN WHICH CASE MINIMUM SHALL BE 4 INCHES. MINIMUM 3 INCH SEPARATION SHALL BE MAINTAINED BETWEEN ALL CONDUITS, PIPES, AND TRENCH WALLS. IF SLURRY BEDDING MATERIAL IS USED, 1 INCH IS ACCEPTABLE IN A SINGLE LAYER INSTALLATION, OTHERWISE 2 INCH SEPARATION IS REQUIRED. UNDERCUTTING TRENCH WALLS TO ACQUIRE CLEARANCES IS NOT PERMITTED.

BEDDING:

6. BEDDING MATERIAL SHALL BE PLACED ON FIRM AND UNYIELDING SUBGRADE PER GREENBOOK SECTION 306. SOFT, SPONGY, UNSTABLE, UNSUITABLE MATERIAL SHALL BE REMOVED AND REPLACED.
7. BEDDING SHALL CONFORM TO GREENBOOK REQUIREMENTS AND OTHER APPLICABLE STANDARDS.

BACKFILL:

8. EXCAVATIONS SHALL BE BACKFILLED WITH AN APPROVED SLURRY MIX, CLSM, CMB, OR CAB. NATIVE SOIL MAY ONLY BE USED WITH CITY ENGINEER'S APPROVAL. CMB, CAB, SOIL SHALL BE COMPACTED TO 90% RELATIVE DENSITY. CMB, CAB SHALL BE WELL GRADED AND HANDLED IN A MANNER TO PREVENT SEGREGATION BY PARTICLE SIZE. SOIL TESTING MAY BE REQUIRED TO BE PROVIDED TO THE FIELD INSPECTOR ON A CASE-BY-CASE BASIS.
9. BACKFILL SLURRY MATERIAL SHALL BE PROPERLY CONSOLIDATED. SLURRY MATERIAL FOR TRENCHES DEEPER THAN 5 FEET AND/OR NARROWER THAN 12 INCHES SHALL BE CONSOLIDATED WITH VIBRATION.
10. BACKFILL MATERIAL SHALL BE MADE SMOOTH AND LEVEL BEFORE PLACING BASE AND PAVEMENT.
11. JETTING IS NOT AN APPROVED DENSIFICATION METHOD.

TRENCH SECTION:

12. AFTER THE EXCAVATION HAS BEEN BACKFILLED, THE EXISTING PAVEMENT SHALL BE REMOVED TO A LINE AT LEAST 12-INCHES BACK OF THE FIRM BANKS OF THE TRENCH ("T-CUT"). EXISTING CMB OR CAB BASE MATERIAL IN THIS AREA SHALL BE COMPACTED TO 95% RELATIVE DENSITY AND NEW BASE MATERIALS SHALL BE PROVIDED TO MATCH THE SURROUNDING BASE THICKNESS AS NECESSARY. WHERE NO BASE MATERIAL EXISTS IN THIS AREA, THE NEW BASE MATERIAL SHALL EXTEND BEYOND THE TRENCH WIDTH TO COVER THE ENTIRE TRENCH "T-CUT" AREA.

STANDARD PLAN NO. S-477-2 | VAULT INDEX NUMBER B-4778 | SHEET 3 OF 4 SHEETS

NOTES: (CONTINUED)

13. NEW BASE MATERIAL OF CMB, OR CAB, SHALL MATCH THE EXISTING BASE THICKNESS, OR 4-INCHES, WHICHEVER IS GREATER AND SHALL BE COMPACTED TO 95% RELATIVE DENSITY. THIS REQUIREMENT SHALL ALSO APPLY OVER SLURRY BACKFILLS UNLESS OTHERWISE APPROVED BY THE ENGINEER. "T-CUT" IS NOT REQUIRED IF AN APPROVED SLURRY MIX BACKFILL IS USED, UNLESS UNDERMINING OF ADJACENT PAVEMENT IS PRESENT. IF SLURRY TRENCH WIDTH IS LESS THAN 12 INCHES, EXISTING PAVEMENT SHALL BE REMOVED TO PROVIDE AT LEAST A 12 INCH WIDE TRENCH SECTION FOR PROPER COMPACTION OF THE BASE MATERIAL.
14. NEW ASPHALT CONCRETE SECTION SHALL MATCH EXISTING PAVEMENT THICKNESS, OR 1" THICKER THAN EXISTING PAVING, WHICHEVER IS GREATER.
15. ASPHALT CONCRETE PAVING WILL OCCUR NO SOONER THAN 42 HOURS AFTER SLURRY BACKFILL OF TRENCH.

GRIND AND RESURFACE SECTION:

WITHIN 30 CALENDAR DAYS AFTER BACKFILLING, ASPHALT CONCRETE SHALL BE COLD MILLED AND RESURFACED AS FOLLOWS:

16. EXISTING ASPHALT CONCRETE SHALL BE GROUND DOWN ONE AND ONE HALF (1-1/2) INCHES, OR ONE HALF THE EXISTING PAVEMENT THICKNESS, WHICHEVER IS LESS, TO THE "T-CAP" LIMITS.
17. WHERE POSSIBLE, "T-CAP" LIMITS SHALL BE FROM FIGURE 1, "EXAMPLES OF GRIND AND RESURFACE "T-CAP" LIMITS". "T-CAP" IS NOT REQUIRED IN STREETS THAT HAVE NOT BEEN RESURFACED WITHIN THE PAST 8 YEARS AND DO NOT IMPACT BIKE LANES.
18. "T-CAP" LIMITS SHALL EXTEND AT LEAST 2 FEET BEYOND THE TRENCH SECTION ("T-CUT" LIMITS). MINIMUM "T-CAP" DIMENSIONS SHALL BE 5 FEET x 5 FEET.
19. "T-CUT" AND CORRESPONDING "T-CAP" (AS APPLICABLE) IS REQUIRED FOR ALL EXCAVATIONS WITH A SURFACE AREA OF 3 SQ. FT OR GREATER.
20. WHERE LIMITS OF "T-CUT"S, "T-CAP"S, POT HOLES OR CORED HOLES ARE WITHIN 4FT OF EACH OTHER, THE PAVEMENT SURFACE RESTORATION SHALL BE COMBINED, BLENDED AND SQUARED USING "T-CAP"S TO ENCOMPASS ALL AREAS IN BETWEEN AS SHOWN IN FIGURE 1. "T-CAP" LIMITS FOR POT HOLES AND CORE HOLES SHALL EXTEND A MINIMUM OF 1-FOOT ALL AROUND BEYOND THE HOLES.
21. IMPACTED BIKE LANES - "T-CAP" LIMITS SHALL FULLY ENCOMPASS ANY BIKE LANE IMPACTED BY THE TRENCH, AND SHALL HAVE A LENGTH THAT EXTENDS AT LEAST 2 FEET BEYOND THE ASPHALT REMOVAL LIMITS IN THE DIRECTION OF BIKE TRAFFIC.
22. AT AREAS THAT EDGE OF TRENCH IS LESS THAN 4-FT FROM EDGE OF GUTTER, THE ENTIRE SURFACE FROM EDGE OF TRENCH TO EDGE OF GUTTER SHALL BE GROUND AND OVERLAID WITH SURFACE COURSE.
23. PAVEMENT SHALL BE LEVEL WITH ADJACENT ROADWAY ELEVATIONS AND SHALL PROVIDE A SMOOTH SURFACE PER GREENBOOK SECTION 302-5 AND SUBJECT TO ACCEPTANCE BY THE CITY PUBLIC WORKS INSPECTOR.
24. "T-CAP" AND PERMANENT BASE PAVING MAY BE PERFORMED ON THE SAME DAY WHEN FEASIBLE.

IDENTIFICATION:

25. EACH RESURFACING SHALL BE IDENTIFIED WITH A METAL IDENTIFICATION TAG IDENTIFYING THE OWNER, AND YEAR OF CONSTRUCTION. IF THE RESURFACING IS MORE THAN 50 FEET IN LENGTH, PLACE THE TAG NEAR EACH END OF THE RESURFACING AND AT INTERVALS NOT TO EXCEED 50 FEET.

STANDARD PLAN NO. S-477-2 | VAULT INDEX NUMBER B-4778 | SHEET 4 OF 4 SHEETS

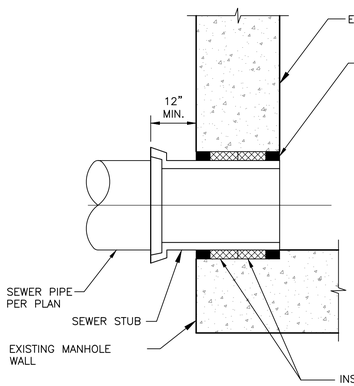

SHEET NOTES:

1. THE CORE CUT HOLE SHALL EQUAL TO THE PIPE O.D. PLUS 2" MAXIMUM.
2. THE CORE CUT HOLE SHALL BE MADE WITH EQUIPMENT SPECIALLY DESIGNED TO CUT A SMOOTH HOLE WITHOUT SPALLING OR DAMAGE TO THE REINFORCING REBAR OR STRUCTURE.
3. SECURELY CONNECT SEWER STUB INTO CORED HOLE WITH STANDARD SEWER PIPE GASKETS AND CEMENT MORTAR.
4. ALL CEMENT MORTAR SHALL BE CLASS "D" PER GREENBOOK SSPWC 201-5.1
5. STANDARD SEWER PIPE GASKETS SHALL CONFORM WITH ASTM F-477 STANDARD SPECIFICATIONS.

MANHOLE PENETRATION CONNECTION 2

NOT TO SCALE

CALL TOLL FREE 811 Know what's below. Call two working before you dig. Underground Service Alert

BENCH MARK

ELEVATIONS ARE REFERENCED TO NAVD88, UTILIZING GEOID12(A) AND DETERMINED LOCALLY BY GPS TIES TO LOS ANGELES COUNTY BENCHMARK "GY12603". THE BENCHMARKS IS A LEAD AND DISK STAMPED "LS8601". ELEVATION =245.039 SFT

GY12603 – L & LS TAG #8601 E'LY CB ROLLING HILLS RD. 0.7' S'LY OF ECR NE'LY COR CRENSHAW BLVD.

NO.	DATE	REVISIONS	ENGR.	APPROV.	DATE
6					
5					
4					
3					
2					
1					

DRAWN BY: RG — DATE: DEC-20
DESIGNED BY: DAM — DATE: DEC-20
CHECKED BY: LEB — DATE: MAY-23

REGISTERED PROFESSIONAL ENGINEER — LUANNE BEAN — CIVIL — STATE OF CALIFORNIA

PLANS PREPARED BY:
NV5
WWW.NV5.COM
163 TECHNOLOGY DRIVE #100
IRVINE, CA 92618
TEL. (949) 585-0477
FAX. (949) 585-0433

LUANNE BEAN, PE — C50129 — 06/30/25
CIVIL ENGINEER: — LICENSE NO. — EXP. DATE

CITY OF ROLLING HILLS
PUBLIC WORKS DEPARTMENT
8-INCH SEWER MAIN PORTUGUESE BEND/ROLLING HILLS ROAD
DETAILS

DWG. NO. D-2
SHEET 10 OF 10

8-INCH SEWER PORTUGUESE BEND PROJECT

Z:\Rolling Hills\8 - inch Sewer Main Portuguese Bend\Plans\CAD\SHT D-2.dwg 11/10/23 8:05am

DAILY BREEZE
Local. News. Matters.
dailybreeze.com

2615 Pacific Coast Highway #329
Hermosa Beach, California 90254
(310) 543-6635
pfernandez@scng.com

City of Rolling Hills
2 Portuguese Bend Road
Rolling Hills, California 90274

Account Number:	5007827
Ad Order Number:	0011713943
Customer's Reference/PO Number:	
Publication:	Daily Breeze
Publication Dates:	01/14/2025 and 01/20/2025
Total Amount:	$589.22
Payment Amount:	$0.00
Amount Due:	$589.22
Notice ID:	1bnd3vLD9qrkTVl705po
Invoice Text:	Notice to Contractors Inviting Bids – City of Rolling Hills, CA NOTICE IS HEREBY GIVEN that sealed proposals for performing the following described work will be received at the office of the City Clerk of the City of Rolling Hills, 2 Portuguese Bend Road, Rolling Hills, California, until 2:00 P.M. on February 18, 2025. Thereafter said bids will be publicly opened and read in the City Clerk's office of said City. Tennis Court ADA Improvement Project, Job No. 2025-01 Plans and specifications are only available from the City electronically. Paper copies are not available from the City. Bidders may request plans, specifications, and bid documents by emailing the City Clerk at: cityclerk@cityofrh.net . All companies requesting project documents will be added to the Project Plan Holder List. An optional pre-bid job walk will be held at the job site, City Hall, 2 Portuguese Bend Road, Rolling Hills, at 10:00 a.m., on January 29, 2025. To allow the City to coordinate this job walk, please register for the job walk with the project manager via phone or email by 3:00 p.m. on January 27, 2025. Please include your name, phone number, firm name and the number of people attending with you. Contact project manager, Christian Horvath, at 310-377-1521 or chorvath@cityofrh.net for questions regarding this project. CITY OF ROLLING HILLS, CALIFORNIA

DAILY BREEZE
Local. News. Matters.
dailybreeze.com

Daily Breeze
2615 Pacific Coast Highway #329
Hermosa Beach, California 90254
(310) 543-6635

0011713943

City of Rolling Hills
2 Portuguese Bend Road
Rolling Hills, California 90274

PROOF OF PUBLICATION (2015.5 C.C.P.)

STATE OF CALIFORNIA County of Los Angeles

I am a citizen of the United States and a resident of the County aforesaid; I am over the age of eighteen years, and not party to or interested in the above-entitled matter. I am the principal clerk of the printer of Daily Breeze, a newspaper of general circulation, printed and published in the City of Torrance*, County of Los Angeles, and which newspaper has been adjudged a newspaper of general circulation by the Superior Court of County of Los Angeles, State of California, under the date of June 15, 1945, Decree No. Pomo C-606. The notice, of which the annexed is a printed copy (set in type not smaller than nonpareil), has been published in each regular and entire issue of said newspaper and not in any supplement thereof on the following dates, to wit:

01/14/2025, 01/20/2025

I certify (or declare) under the penalty of perjury that the foregoing is true and correct.

Dated at Hermosa Beach, California

On this 20th day of January, 2025.

Signature

*Daily Breeze circulation includes the following cities: Carson, Compton, Culver City, El Segundo, Gardena, Harbor City, Hawthorne, Hermosa Beach, Inglewood, Lawndale, Lomita, Los Angeles, Long Beach, Manhattan Beach, Palos Verdes Peninsula, Palos Verdes, Rancho Palos Verdes, Rancho Palos Verdes Estates, Redondo Beach, San Pedro, Santa Monica, Torrance and Wilmington

Notice to Contractors Inviting Bids – City of Rolling Hills, CA

NOTICE IS HEREBY GIVEN that sealed proposals for performing the following described work will be received at the office of the City Clerk of the City of Rolling Hills, 2 Portuguese Bend Road, Rolling Hills, California, until **2:00 P.M. on February 18, 2025.** Thereafter said bids will be publicly opened and read in the City Clerk's office of said City.

Tennis Court ADA Improvement Project, Job No. 2025-01
Plans and specifications are only available from the City electronically. Paper copies are not available from the City. Bidders may request plans, specifications, and bid documents by emailing the City Clerk at: cityclerk@cityofrh.net . All companies requesting project documents will be added to the Project Plan Holder List.

An optional pre-bid job walk will be held at the job site, City Hall, 2 Portuguese Bend Road, Rolling Hills, at 10:00 a.m., on January 29, 2025. To allow the City to coordinate this job walk, please register for the job walk with the project manager via phone or email by 3:00 p.m. on January 27, 2025. Please include your name, phone number, firm name and the number of people attending with you.
Contact project manager, Christian Horvath, at 310-377-1521 or chorvath@cityofrh.net for questions regarding this project.

CITY OF ROLLING HILLS, CALIFORNIA
Daily Breeze
Published: 1/14, 1/20/25

CONTRACT AGREEMENT

This Construction Agreement ("Agreement") is made and entered into as of the date executed by the Mayor and attested to by the City Clerk, by and between Fidelity Builders, Inc. (hereinafter referred to as "CONTRACTOR") and the City of Rolling Hills, California, a municipal corporation (hereinafter referred to as "CITY").

R E C I T A L S

A. Pursuant to the Notice Inviting Sealed Bids for Tennis Court ADA Improvement Project No. 2025-01 (Project"), bids were received, publicly opened, and declared on the date specified in the notice; and

B. On April 14, 2025, City's City Council declared CONTRACTOR to be the lowest responsible bidder and accepted the bid of CONTRACTOR; and

C. The City Council has authorized the Mayor to execute a written contract with CONTRACTOR for furnishing labor, equipment and material for the No. 2025-01, Tennis Court ADA Improvement Project in the City of Rolling Hills.

NOW, THEREFORE, in consideration of the foregoing and the mutual covenants herein contained, it is agreed:

1. GENERAL SCOPE OF WORK: CITY agrees to engage CONTRACTOR and CONTRACTOR agrees to furnish all necessary labor, tools, materials, for the Project in the City of Rolling Hills. The work shall be performed in accordance with the Plans and Specifications dated January 13, 2025 (the "Specifications") on file in the office of the City Clerk and in accordance with bid prices set forth in CONTRACTOR'S Bid Proposal and in accordance with the instructions of the City.

2. INCORPORATED DOCUMENTS TO BE CONSIDERED COMPLEMENTARY: The contract documents for the aforesaid project shall consist of all the documents and exhibits in the Request for Bid and all referenced specifications, details, standard drawings, and appendices; together with this Agreement and all required bonds, insurance certificates, permits, notices and affidavits; and also, including any and all addenda or supplemental agreements clarifying, amending, or extending the work contemplated as may be required to insure its completion in an acceptable manner. All of the provisions of said contract documents are made a part hereof as though fully set forth herein. This contract is intended to require a complete and finished piece of work and anything necessary to complete the work properly and in accordance with the law and lawful governmental regulations shall be performed by CONTRACTOR whether set out specifically in the contract or not. Should it be ascertained that any inconsistency exists between the aforesaid documents and this written agreement, the provisions of this Agreement shall govern. Collectively, these contract documents constitute the complete agreement

DRAFT

between CITY and CONTRACTOR and supersede any previous agreements or understandings.

3. COMPENSATION: CONTRACTOR agrees to receive and accept the prices set forth in its Bid Proposal of seven hundred thousand, three hundred and sixty dollars ($700,360.00) as full compensation for furnishing all materials, performing all work, and fulfilling all obligations hereunder. Said compensation shall cover all expenses, losses, damages, and consequences arising out of the nature of the work during its progress or prior to its acceptance including those for well and faithfully completing the work and the whole thereof in the manner and time specified in the aforesaid contract documents; and also including those arising from actions of the elements, unforeseen difficulties or obstructions encountered in the prosecution of the work, suspension or discontinuance of the work, and all other unknowns or risks of any description connected with the work.

4. TIME OF PERFORMANCE: CONTRACTOR agrees to complete the work within [INSERT VALUE] working days from the date of the notice to proceed. By signing this Agreement, CONTRACTOR represents to CITY that the contract time is reasonable for completion of the work and that CONTRACTOR will complete such work within the contract time.

5. LIQUIDATED DAMAGES: In accordance with Government Code section 53069.85, it is agreed that CONTRACTOR will pay to CITY the sum of be $1000/day for each and every calendar day of delay beyond the time prescribed in the Contract Documents for finishing the Work, as Liquidated Damages and not as a penalty or forfeiture. In the event this is not paid, CONTRACTOR agrees CITY may deduct that amount from any money due or that may become due CONTRACTOR under the Contract. This Article does not exclude recovery of other damages specified in the Contract Documents.

6. SUBSTITUTION OF SECURITIES: Pursuant to section 22300 of the Public Contract Code of the State of California, CONTRACTOR may request CITY to make retention payments directly to an escrow agent or may substitute securities for any money withheld by CITY to ensure performance under the contract. At the request and expense of CONTRACTOR, securities equivalent to the amount withheld shall be deposited with CITY or with a state or federally chartered bank as the escrow agent who shall return such securities to CONTRACTOR upon satisfactory completion of the contract. Deposit of securities with an escrow agent shall be subject to a written agreement substantially in the form provided in section 22300 of the Public Contract Code.

7. PREVAILING WAGES AND CALIFORNIA LABOR LAWS.

Pursuant to Labor Code §§ 1720 *et seq.*, and as specified in 8 California Code of Regulations § 16000 (“Prevailing Wage Laws”), CONTRACTOR must pay its workers prevailing wages. It is CONTRACTOR’s responsibility to interpret and

DRAFT

implement any prevailing wage requirements, and CONTRACTOR agrees to pay any penalty or civil damages resulting from a violation of the prevailing wage laws. CONTRACTOR shall defend, indemnify and hold the CITY, its officials, officers, employees and agents free and harmless from any claim or liability arising out of any failure or alleged failure to comply with the Prevailing Wage Laws. CONTRACTOR and any subcontractor shall forfeit a penalty of up to $200 per calendar day or portion thereof for each worker paid less than the prevailing wage rates.

In accordance with Labor Code § 1773.2, copies of the prevailing rate of per diem wages are available upon request from CITY's Engineering Division or the website for State of California Prevailing wage determination at http://www.dir.ca.gov/DLSR/PWD. CONTRACTOR must post a copy of the prevailing rate of per diem wages at the job site.

CITY directs CONTRACTOR's attention to Labor Code §§ 1777.5, 1777.6 and 3098 concerning the employment of apprentices by CONTRACTOR or any subcontractor.

Labor Code § 1777.5 requires CONTRACTOR or subcontractor employing tradesmen in any apprenticeship occupation to apply to the joint apprenticeship committee nearest the site of the public works project and which administers the apprenticeship program in that trade for a certificate of approval. The certificate must also fix the ratio of apprentices to journeymen that will be used in the performance of the contract. The ratio of apprentices to journeymen in such cases will not be less than one to five except:

When employment in the area of coverage by the joint apprenticeship committee has exceeded an average of 15 percent in the 90 days before the request for certificate, or

When the number of apprentices in training in the area exceeds a ratio of one to five, or

When the trade can show that it is replacing at least 1/30 of its membership through apprenticeship training on an annual basis state-wide or locally, or

Assignment of an apprentice to any work performed under a public works contract would create a condition that would jeopardize his or her life or the life, safety, or property of fellow employees or the public at large, or the specific task to which the apprentice is to be assigned is of a nature that training cannot be provided by a journeyman.

When CONTRACTOR provides evidence that CONTRACTOR employs registered apprentices on all of his contracts on an annual average of not less than one apprentice to eight journeymen.

DRAFT

CONTRACTOR is required to make contributions to funds established for the administration of apprenticeship programs if CONTRACTOR employs registered apprentices or journeymen in any apprenticeable trade on such contracts and if other contractors on the public works site are making such contributions.

CONTRACTOR and any subcontractor must comply with Labor Code §§ 1777.5 and 1777.6 in the employment of apprentices.

Information relative to apprenticeship standards, wage schedules and other requirements may be obtained from the Director of Industrial Relations, ex-officio the Administrator of Apprenticeship, San Francisco, California, or from the Division of Apprenticeship Standards and its branch offices.

The CONTRACTOR or any subcontractor that is determined by the Labor Commissioner to have knowingly violated Section 1777.5 shall forfeit as a civil penalty an amount not exceeding $100 for each full calendar day of noncompliance, or such greater amount as provided by law.

CONTRACTOR and each subcontractor shall keep an accurate payroll record, showing the name, address, social security number, work classification, straight time and overtime hours worked each day and week, and the actual per diem wages paid to each journeyman, apprentice, worker, or other employee employed by him or her in connection with the public work. The payroll records shall be certified and shall be available for inspection at all reasonable hours at the principal office of CONTRACTOR in the manner provided in Labor Code section 1776. In the event of noncompliance with the requirements of this section, CONTRACTOR shall have 10 days in which to comply subsequent to receipt of written notice specifying in what respects such CONTRACTOR must comply with this section. Should noncompliance still be evident after such 10-day period, CONTRACTOR shall, as a penalty to CITY, forfeit not more than $100.00 for each calendar day or portion thereof, for each worker, until strict compliance is effectuated. The amount of the forfeiture is to be determined by the Labor Commissioner. A contractor who is found to have violated the provisions of law regarding wages on Public Works with the intent to defraud shall be ineligible to bid on Public Works contracts for a period of one to three years as determined by the Labor Commissioner. Upon the request of the Division of Apprenticeship Standards or the Division of Labor Standards Enforcement, such penalties shall be withheld from progress payments then due. The responsibility for compliance with this section is on CONTRACTOR. The requirement to submit certified payroll records directly to the Labor Commissioner under Labor Code section 1771.4 shall not apply to work performed on a public works project that is exempt pursuant to the small project exemption specified in Labor Code Section 1771.4.

Any ineligible contractor or subcontractor pursuant to Labor Code Sections 1777.1 and 1777.7 may not perform work on this Project.

DRAFT

By executing this Contract, CONTRACTOR verifies that it fully complies with all requirements and restrictions of state and federal law respecting the employment of undocumented aliens, including, but not limited to, the Immigration Reform and Control Act of 1986, as may be amended from time to time, and shall require all subcontractors and sub-subcontractors to comply with the same.

8. LEGAL HOURS OF WORK: Eight (8) hours of labor shall constitute a legal day's work for all workmen employed in the execution of this contract, and CONTRACTOR and any subcontractor under it shall comply with and be governed by the laws of the State of California having to do with working hours set forth in Division 2, Part 7, Chapter 1, Article 3 of the Labor Code of the State of California as amended.

   CONTRACTOR shall forfeit, as a penalty to City, twenty-five dollars ($25.00) for each laborer, workman or mechanic employed in the execution of the contract, by him or any subcontractor under it, upon any of the work hereinbefore mentioned, for each calendar day during which the laborer, worker or mechanic is required or permitted to labor more than eight (8) hours in any one calendar day or 40 hours in any one calendar week in violation of the Labor Code.

9. PUBLIC WORKS CONTRACTOR REGISTRATION: Pursuant to Labor Code sections 1725.5 and 1771.1, all contractors and subcontractors that wish to bid on, be listed in a bid proposal, or enter into a contract to perform public work must be registered with the Department of Industrial Relations (DIR). No bid will be accepted nor any contract entered into without proof of the contractor's and subcontractors' current registration with the DIR to perform public work. Notwithstanding the foregoing, the contractor registration requirements mandated by Labor Code Sections 1725.5 and 1771.1 shall not apply to work performed on a public works project that is exempt pursuant to the small project exemption specified in Labor Code Sections 1725.5 and 1771.1.

10. LABOR COMPLIANCE AND STOP ORDERS: This Project is subject to compliance monitoring and enforcement by the DIR. It shall be CONTRACTOR's sole responsibility to evaluate and pay the cost of complying with all labor compliance requirements under this Contract and applicable law. Any stop orders issued by the DIR against CONTRACTOR or any subcontractor that affect CONTRACTOR's performance of Work, including any delay, shall be CONTRACTOR's sole responsibility. Any delay arising out of or resulting from such stop orders shall be considered CONTRACTOR caused delay subject to any applicable liquidated damages and shall not be compensable by the CITY. CONTRACTOR shall defend, indemnify and hold CITY, its officials, officers, employees and agents free and harmless from any claim or liability arising out of stop orders issued by the DIR against CONTRACTOR or any subcontractor.

DRAFT

11. DEBARMENT OF CONTRACTORS AND SUBCONTRACTORS: Contractors or subcontractors may not perform work on a public works project with a subcontractor who is ineligible to perform work on a public project pursuant to Labor Code section 1777.1 or 1777.7. Any contract on a public works project entered into between a contractor and a debarred subcontractor is void as a matter of law. A debarred subcontractor may not receive any public money for performing work as a subcontractor on a public works contract. Any public money that is paid, or may have been paid to a debarred subcontractor by a contractor on the Project shall be returned to the CITY. CONTRACTOR shall be responsible for the payment of wages to workers of a debarred subcontractor who has been allowed to work on the project.

12. LABOR/EMPLOYMENT SAFETY: CONTRACTOR shall comply with all applicable laws and regulations of the federal, state, and local government, including Cal/OSHA requirements and requirements for verification of employees' legal right to work in the United States

    CONTRACTOR shall maintain emergency first aid treatment for its employees which complies with the Federal Occupational Safety and Health Act of 1970 (29 U.S.C. § 651 *et seq*.), and California Code of Regulations, Title 8, Industrial Relations Division 1, Department of Industrial Relations, Chapter 4. CONTRACTOR shall ensure the availability of emergency medical services for its employees in accordance with California Code of Regulations, Title 8, Section 1512.

    CONTRACTOR shall submit the Illness and Injury Prevention Program and a Project site specific safety program to CITY prior to beginning Work at the Project site. CONTRACTOR shall maintain a confined space program that meets or exceeds the CITY Standards. CONTRACTOR shall adhere to CITY's lock out tag out program

13. TRAVEL AND SUBSISTENCE PAY: CONTRACTOR agrees to pay travel and subsistence pay to each worker needed to execute the work required by this Agreement as such travel and subsistence payments are defined in the applicable collective bargaining agreements filed in accordance with Labor Code Section 1773.8.

14. CONTRACTOR'S LIABILITY: The City of Rolling Hills and its officers, agents and employees ("Indemnitees") shall not be answerable or accountable in any manner for any loss or damage that may happen to the work or any part thereof, or for any of the materials or other things used or employed in performing the work; or for injury or damage to any person or persons, either workers or employees of CONTRACTOR, of its subcontractors or the public, or for damage to adjoining or other property from any cause whatsoever arising out of or in connection with the performance of the work. CONTRACTOR shall be responsible for any damage or

DRAFT

injury to any person or property resulting from defects or obstructions or from any cause whatsoever.

To the fullest extent permitted by law, CONTRACTOR will indemnify Indemnities against and will hold and save Indemnitees harmless from any and all actions, claims, damages to persons or property, penalties, obligations or liabilities that may be asserted or claimed by any person, firm, entity, corporation, political subdivision, or other organization arising out of or in connection with the work, operation, or activities of CONTRACTOR, its agents, employees, subcontractors or invitees provided for herein, whether or not there is concurrent passive negligence on the part of City. In connection therewith:

a. CONTRACTOR will defend any action or actions filed in connection with any such claims, damages, penalties, obligations or liabilities and will pay all costs and expenses, including attorneys' fees, expert fees and costs incurred in connection therewith.

b. CONTRACTOR will promptly pay any judgment rendered against CONTRACTOR or Indemnitees covering such claims, damages, penalties, obligations and liabilities arising out of or in connection with such work, operations or activities of CONTRACTOR hereunder, and CONTRACTOR agrees to save and hold the Indemnitees harmless therefrom.

c. In the event Indemnitees are made a party to any action or proceeding filed or prosecuted against CONTRACTOR for damages or other claims arising out of or in connection with the work, operation or activities hereunder, CONTRACTOR agrees to pay to Indemnitees and any all costs and expenses incurred by Indemnitees in such action or proceeding together with reasonable attorneys' fees.

Contractor's obligations under this section apply regardless of whether or not such claim, charge, damage, demand, action, proceeding, loss, stop notice, cost, expense, judgment, civil fine or penalty, or liability was caused in part or contributed to by an Indemnitee. However, without affecting the rights of City under any provision of this agreement, to the extent required by Civil Code section 2782, Contractor shall not be required to indemnify and hold harmless City for liability attributable to the active negligence of City, provided such active negligence is determined by agreement between the parties or by the findings of a court of competent jurisdiction. In instances where City is shown to have been actively negligent and where City active negligence accounts for only a percentage of the liability involved, the obligation of Contractor will be for that entire portion or percentage of liability not attributable to the active negligence of City.

DRAFT

So much of the money due to CONTRACTOR under and by virtue of the contract as shall be considered necessary by City may be retained by City until disposition has been made of such actions or claims for damages as aforesaid.

It is expressly understood and agreed that the foregoing provisions are intended to be as broad and inclusive as is permitted by the law of the State of California. This indemnity provision shall survive the termination of the Agreement and is in addition to any other rights or remedies which Indemnitees may have under the law.

This indemnity is effective without reference to the existence or applicability of any insurance coverage which may have been required under this Agreement or any additional insured endorsements which may extend to Indemnitees.

CONTRACTOR, on behalf of itself and all parties claiming under or through it, hereby waives all rights of subrogation and contribution against the Indemnitees, while acting within the scope of their duties, from all claims, losses and liabilities arising out of or incident to activities or operations performed by or on behalf of the CONTRACTOR regardless of any prior, concurrent, or subsequent passive negligence by the Indemnitees.

15. THIRD PARTY CLAIMS. In accordance with Public Contract Code § 9201, CITY will promptly inform CONTRACTOR regarding third-party claims against CONTRACTOR, but in no event later than ten (10) business days after CITY receives such claims. Such notification will be in writing and forwarded in accordance with the “Notice” section of this Agreement. As more specifically detailed in the contract documents, CONTRACTOR agrees to indemnify and defend the City against any third-party claim.

16. WORKERS COMPENSATION: In accordance with California Labor Code Sections 1860 and 3700, CONTRACTOR and each of its subcontractors will be required to secure the payment of compensation to its employees. In accordance with the provisions of California Labor Code Section 1861, CONTRACTOR, by signing this contract, certifies as follows: "I am aware of the provisions of Section 3700 of the Labor Code which require every employer to be insured against liability for worker's compensation or to undertake self-insurance in accordance with the provisions of that code, and I will comply with such provisions before commencing the performance of the work of this contract.

17. INSURANCE: CONTRACTOR shall procure and maintain for the duration of the Agreement, and for 1 year thereafter, insurance against claims for injuries to persons or damages to property which may arise from or in connection with the performance of the work hereunder by the CONTRACTOR, its agents, representatives, employees, or subcontractors.

DRAFT

a. Minimum Scope and Limit of Insurance. Coverage shall be at least as broad as:

   i. Commercial General Liability (CGL): Insurance Services Office (ISO) Form CG 00 01 covering CGL on an "occurrence" basis, including products and completed operations, property damage, bodily injury and personal & advertising injury with limits no less than $5,000,000 per occurrence. If a general aggregate limit applies, either the general aggregate limit shall apply separately to this project/location (ISO CG 25 03 or 25 04) or the general aggregate limit shall be twice the required occurrence limit.

   ii. Automobile Liability: Insurance Services Office Form CA 0001 covering Code 1 (any auto), with limits no less than $5,000,000 per accident for bodily injury and property damage.

   iii. Workers' Compensation insurance as required by the State of California, with Statutory Limits, and Employers' Liability insurance with a limit of no less than $1,000,000 per accident for bodily injury or disease.

   iv. Builder's Risk (Course of Construction) insurance utilizing an "All Risk" (Special Perils) coverage form, with limits equal to the completed value of the project and no coinsurance penalty provisions.

   v. Professional Liability (if Design/Build), with limits no less than $2,000,000 per occurrence or claim, and $2,000,000 policy aggregate.

   vi. Contractors' Pollution Legal Liability and/or Asbestos Legal Liability and/or Errors and Omissions (if project involves environmental hazards) with limits no less than $1,000,000 per occurrence or claim, and $2,000,000 policy aggregate.

   vii. If the contractor maintains broader coverage and/or higher limits than the minimums shown above, the CITY requires and shall be entitled to the broader coverage and/or the higher limits maintained by CONTRACTOR. Any available insurance proceeds in excess of the specified minimum limits of insurance and coverage shall be available to the CITY.

b. Self-Insured Retentions. Self-insured retentions must be declared to and approved by the CITY. At the option of the CITY, either: the CONTRACTOR shall obtain coverage to reduce or eliminate such self-insured retentions as respects the CITY, its officers, officials, employees, and volunteers; or the CONTRACTOR shall provide a financial guarantee satisfactory to the CITY guaranteeing payment of losses and related investigations, claim administration, and defense expenses. The policy language shall provide, or be endorsed to provide, that the self-insured retention may be satisfied by either the named insured or CITY.

DRAFT

c. Other Insurance Provisions. The insurance policies are to contain, or be endorsed to contain, the following provisions:

i. The CITY, its officers, officials, employees, and volunteers are to be covered as additional insureds on the CGL policy with respect to liability arising out of work or operations performed by or on behalf of the CONTRACTOR including materials, parts, or equipment furnished in connection with such work or operations and automobiles owned, leased, hired, or borrowed by or on behalf of the CONTRACTOR. General liability coverage can be provided in the form of an endorsement to the CONTRACTOR's insurance (at least as broad as ISO Form CG 20 10, CG 11 85 or both CG 20 10, CG 20 26, CG 20 33, or CG 20 38; and CG 20 37 forms if later revisions used).

ii. For any claims related to this project, the CONTRACTOR's insurance coverage shall be primary insurance coverage at least as broad as ISO CG 20 01 04 13 as respects the CITY, its officers, officials, employees, and volunteers. Any insurance or self-insurance maintained by the CITY, its officers, officials, employees, or volunteers shall be excess of the CONTRACTOR's insurance and shall not contribute with it.

iii. Each insurance policy required by this clause shall provide that coverage shall not be canceled, except with notice to the CITY.

d. Builder's Risk (Course of Construction) Insurance.

i. CONTRACTOR may submit evidence of Builder's Risk insurance in the form of Course of Construction coverage. Such coverage shall name the CITY as a loss payee as their interest may appear.

ii. If the Project does not involve new or major reconstruction, at the option of the CITY, an Installation Floater may be acceptable. For such projects, a Property Installation Floater shall be obtained that provides for the improvement, remodel, modification, alteration, conversion or adjustment to existing buildings, structures, processes, machinery, and equipment. The Property Installation Floater shall provide property damage coverage for any building, structure, machinery or equipment damaged, impaired, broken, or destroyed during the performance of the Work, including during transit, installation, and testing at the CITY's site.

e. Claims Made Policies. If any coverage required is written on a claims-made coverage form:

i. The retroactive date must be shown, and this date must be before the execution date of the contract or the beginning of contract work.

ii. Insurance must be maintained and evidence of insurance must be provided for at least five (5) years after completion of contract work.

DRAFT

iii. If coverage is cancelled or non-renewed, and not replaced with another claims-made policy form with a retroactive date prior to the contract effective, or start of work date, the CONTRACTOR must purchase extended reporting period coverage for a minimum of five (5) years after completion of contract work.

iv. A copy of the claims reporting requirements must be submitted to the CITY for review.

v. If the services involve lead-based paint or asbestos identification/remediation, the Contractors Pollution Liability policy shall not contain lead-based paint or asbestos exclusions. If the services involve mold identification/remediation, the Contractors Pollution Liability policy shall not contain a mold exclusion, and the definition of Pollution shall include microbial matter, including mold.

f. Acceptability of Insurers. Insurance is to be placed with insurers authorized to conduct business in the state with a current A.M. Best rating of no less than A: VII, unless otherwise acceptable to the CITY.

g. Waiver of Subrogation. CONTRACTOR hereby agrees to waive rights of subrogation which any insurer of CONTRACTOR may acquire from CONTRACTOR by virtue of the payment of any loss. CONTRACTOR agrees to obtain any endorsement that may be necessary to affect this waiver of subrogation. The Workers' Compensation policy shall be endorsed with a waiver of subrogation in favor of the CITY for all work performed by the CONTRACTOR, its employees, agents and subcontractors.

h. Verification of Coverage. CONTRACTOR shall furnish the CITY with original Certificates of Insurance including all required amendatory endorsements (or copies of the applicable policy language effecting coverage required by this clause) and a copy of the Declarations and Endorsement Page of the CGL policy listing all policy endorsements to CITY before work begins. However, failure to obtain the required documents prior to the work beginning shall not waive the CONTRACTOR's obligation to provide them. The CITY reserves the right to require complete, certified copies of all required insurance policies, including endorsements, required by these specifications, at any time.

i. Subcontractors. CONTRACTOR shall require and verify that all subcontractors maintain insurance meeting all requirements stated herein, and CONTRACTOR shall ensure that CITY is an additional insured on insurance required from subcontractors. For CGL coverage, subcontractors shall provide coverage with a form at least as broad as CG 20 38 04 13.

j. Special Risks or Circumstances. CITY reserves the right to modify these requirements, including limits, based on the nature of the risk, prior experience, insurer, coverage, or other circumstances.

DRAFT

18. ASSIGNMENT: This contract is not assignable nor the performance of either party's duties delegable without the prior written consent of the other party. Any attempted or purported assignment or delegation of any of the rights of obligations of either party without the prior written consent of the other shall be void and of no force and effect.

19. INDEPENDENT CONTRACTOR: CONTRACTOR is and shall at all times remain as to the CITY, a wholly independent contractor. Neither the CITY nor any of its agents shall have control of the conduct of CONTRACTOR or any of CONTRACTOR'S employees, except as herein set forth. CONTRACTOR shall not at any time or in any manner represent that it or any of its agents or employees are in any manner agents or employees of CITY.

20. TAXES: CONTRACTOR is responsible for paying all retail sales and use, transportation, export, import, special or other taxes and duties applicable to, and assessable against any work, materials, equipment, services, processes and operations incidental to or involved in this contract. CONTRACTOR is responsible for ascertaining and arranging to pay them. The prices established in the contract shall include compensation for any taxes CONTRACTOR is required to pay by laws and regulations in effect at the bid opening date.

21. LICENSES: CONTRACTOR represents and warrants to CITY that it has all licenses, permits, qualifications, insurance, and approvals of whatsoever nature which are legally required of CONTRACTOR to practice its profession. CONTRACTOR represents and warrants to CITY that CONTRACTOR shall, at its sole cost and expense, keep in effect or obtain at all times during the term of this Agreement any licenses, permits, insurance, and approvals which are legally required of CONTRACTOR to practice its profession.

    Contractors are required by law to be licensed and regulated by the Contractors' State License Board which has jurisdiction to investigate complaints against contractors if a complaint regarding a patent act or omission is filed within five (5) years of the date of the alleged violation. A complaint regarding a latent act or omission pertaining to structural defects must be filed within ten (10) years of the date of the alleged violation. Any questions concerning a contractor may be referred to the Registrar, Contractors' State License Board, P.O. Box 26000, Sacramento, California 95826.

22. RECORDS: CONTRACTOR shall maintain accounts and records, including personnel, property, and financial records, adequate to identify and account for all costs pertaining to this Agreement and such other records as may be deemed necessary by CITY or any authorized representative, and will be retained for four years after the expiration of this Agreement. All such records shall be made available for inspection or audit by CITY at any time during regular business hours.

23. SEVERABILITY: If any portion of these contract documents are declared by a court of competent jurisdiction to be invalid or unenforceable, then such portion will

DRAFT

be deemed modified to the extent necessary in the opinion of the court to render such portion enforceable and, as so modified, such portion and the balance of this Agreement will continue in full force and effect.

24. WHOLE AGREEMENT: This Agreement supersedes any and all other agreements either oral or written, between the parties and contains all of the covenants and agreements between the parties pertaining to the work of improvements described herein. Each party to this contract acknowledges that no representations, inducements, promises or agreements, orally or otherwise, have been made by any party, or anyone acting on behalf of any party, which are not embodied herein, and that any other agreement, statements or promise not contained in this contract shall not be valid or binding. Any modifications of this contract will be effective only if signed by the party to be charged.

25. AUTHORITY: CONTRACTOR affirms that the signatures, titles, and seals set forth hereinafter in execution of this Agreement represent all individuals, firm members, partners, joint ventures, and/or corporate officers having a principal interest herein. Each party warrants that the individuals who have signed this Agreement have the legal power, right, and authority to make this Agreement and to bind each respective party. This Agreement may be modified by written amendment. CITY's city manager may execute any such amendment on CITY's behalf.

26. NOTICES: All notices permitted or required under this Agreement shall be in writing, and shall be deemed made when delivered to the applicable party's representative as provided in this Agreement. Additionally, such notices may be given to the respective parties at the following addresses, or at such other addresses as the parties may provide in writing for this purpose. Such notices shall be deemed made when personally delivered or when mailed forty-eight (48) hours after deposit in the U.S. mail, first-class postage prepaid, and addressed to the party at its applicable address.

CITY OF ROLLING HILLS
2 Portuguese Bend Rd.
Rolling Hills, CA 90274

Attention: Christian Horvath, Project Manager

CONTRACTOR:

Fidelity Builders, Inc.
1824 Oakwood Ave.
Glendale, CA 91208

Attention: Narek Halablian

DRAFT

27. DISPUTES: Effective January 1, 1991, Section 20104 et seq., of the California Public Contract Code prescribes a process utilizing informal conferences, non-binding judicial supervised mediation, and judicial arbitration to resolve disputes on construction claims of $375,000 or less. Effective January 1, 2017, Section 9204 of the Public Contract Code prescribes a process for negotiation and mediation to resolve disputes on construction claims. The intent of this Section is to implement Sections 20104 et seq. and Section 9204 of the California Public Contract Code. This Section shall be construed to be consistent with said statutes.

Claims: For purposes of this Section, "Claim" means a separate demand by CONTRACTOR, after a change order duly requested in accordance with the terms of this Contract has been denied by the CITY, for (A) a time extension, (B) payment of money or damages arising from Work done by or on behalf of CONTRACTOR pursuant to the Contract, or (C) an amount the payment of which is disputed by the CITY. A "Claim" does not include any demand for payment for which CONTRACTOR has failed to provide notice, request a change order, or otherwise failed to follow any procedures contained in the Contract Documents. Claims governed by this Section may not be filed unless and until CONTRACTOR completes all procedures for giving notice of delay or change and for the requesting of a time extension or change order, including but not necessarily limited to the change order procedures contained herein, and CONTRACTOR's request for a change has been denied in whole or in part. Claims governed by this Section must be filed no later than fourteen (14) days after a request for change has been denied in whole or in part or after any other event giving rise to the Claim. The Claim shall be submitted in writing to the CITY and shall include on its first page the following in 16 point capital font: "THIS IS A CLAIM." Furthermore, the claim shall include the documents necessary to substantiate the claim. Nothing in this Section is intended to extend the time limit or supersede notice requirements otherwise provided by contract for the filing of claims, including all requirements pertaining to compensation or payment for extra Work, disputed Work, and/or changed conditions. Failure to follow such contractual requirements shall bar any claims or subsequent lawsuits for compensation or payment thereon.

Supporting Documentation: The CONTRACTOR shall submit all claims in the following format:

Summary of claim merit and price, reference Contract Document provisions pursuant to which the claim is made

List of documents relating to claim:

Specifications
Drawings
Clarifications (Requests for Information)
Schedules
Other

DRAFT

Chronology of events and correspondence

Analysis of claim merit

Analysis of claim cost

Time impact analysis in CPM format

If CONTRACTOR's claim is based in whole or in part on an allegation of errors or omissions in the Drawings or Specifications for the Project, CONTRACTOR shall provide a summary of the percentage of the claim subject to design errors or omissions and shall obtain a certificate of merit in support of the claim of design errors and omissions.

Cover letter and certification of validity of the claim, including any claims from subcontractors of any tier, in accordance with Government Code section 12650 *et seq*.

City's Response. Upon receipt of a claim pursuant to this Section, CITY shall conduct a reasonable review of the claim and, within a period not to exceed 45 days, shall provide CONTRACTOR a written statement identifying what portion of the claim is disputed and what portion is undisputed. Any payment due on an undisputed portion of the claim will be processed and made within 60 days after the public entity issues its written statement.

If CITY needs approval from its governing body to provide the CONTRACTOR a written statement identifying the disputed portion and the undisputed portion of the claim, and the governing body does not meet within the 45 days or within the mutually agreed to extension of time following receipt of a claim sent by registered mail or certified mail, return receipt requested, CITY shall have up to three days following the next duly publicly noticed meeting of the governing body after the 45-day period, or extension, expires to provide CONTRACTOR a written statement identifying the disputed portion and the undisputed portion.

Within 30 days of receipt of a claim, CITY may request in writing additional documentation supporting the claim or relating to defenses or claims CITY may have against the CONTRACTOR. If additional information is thereafter required, it shall be requested and provided pursuant to this subdivision, upon mutual agreement of CITY and the CONTRACTOR.

CITY's written response to the claim, as further documented, shall be submitted to CONTRACTOR within 30 days (if the claim is less than $50,000, within 15 days) after receipt of the further documentation, or within a period of time no greater than that taken by CONTRACTOR in producing the additional information or requested documentation, whichever is greater.

Meet and Confer. If the CONTRACTOR disputes CITY's written response, or CITY fails to respond within the time prescribed, the CONTRACTOR may so notify CITY, in writing, either within 15 days of receipt of CITY's response or within 15 days of CITY's failure to

DRAFT

respond within the time prescribed, respectively, and demand an informal conference to meet and confer for settlement of the issues in dispute. Upon receipt of a demand, CITY shall schedule a meet and confer conference within 30 days for settlement of the dispute.

Mediation. Within 10 business days following the conclusion of the meet and confer conference, if the claim or any portion of the claim remains in dispute, CITY shall provide the CONTRACTOR a written statement identifying the portion of the claim that remains in dispute and the portion that is undisputed. Any payment due on an undisputed portion of the claim shall be processed and made within 60 days after CITY issues its written statement. Any disputed portion of the claim, as identified by CONTRACTOR in writing, shall be submitted to nonbinding mediation, with CITY and CONTRACTOR sharing the associated costs equally. CITY and CONTRACTOR shall mutually agree to a mediator within 10 business days after the disputed portion of the claim has been identified in writing unless the parties agree to select a mediator at a later time.

If the Parties cannot agree upon a mediator, each Party shall select a mediator and those mediators shall select a qualified neutral third party to mediate with regard to the disputed portion of the claim. Each Party shall bear the fees and costs charged by its respective mediator in connection with the selection of the neutral mediator.

For purposes of this section, mediation includes any nonbinding process, including, but not limited to, neutral evaluation or a dispute review board, in which an independent third party or board assists the Parties in dispute resolution through negotiation or by issuance of an evaluation. Any mediation utilized shall conform to the timeframes in this section.

Unless otherwise agreed to by CITY and CONTRACTOR in writing, the mediation conducted pursuant to this section shall excuse any further obligation under Section 20104.4 to mediate after litigation has been commenced.

The mediation shall be held no earlier than the date CONTRACTOR completes the Work or the date that CONTRACTOR last performs Work, whichever is earlier. All unresolved claims shall be considered jointly in a single mediation unless a new unrelated claim arises after mediation is completed.

Procedures After Mediation. If following the mediation, the claim or any portion remains in dispute, CONTRACTOR must file a claim pursuant to Chapter 1 (commencing with Section 900) and Chapter 2 (commencing with Section 910) of Part 3 of Division 3.6 of Title 1 of the Government Code. For purposes of those provisions, the running of the period of time within which a claim must be filed shall be tolled from the time CONTRACTOR submits his or her written claim pursuant to subdivision (a) until the time the claim is denied, including any period of time utilized by the meet and confer conference or mediation.

Civil Actions. The following procedures are established for all civil actions filed to resolve claims subject to this Section:

DRAFT

Within 60 days, but no earlier than 30 days, following the filing or responsive pleadings, the court shall submit the matter to non-binding mediation unless waived by mutual stipulation of both parties or unless mediation was held prior to commencement of the action in accordance with Public Contract Code section 9204 and the terms of these procedures. The mediation process shall provide for the selection within 15 days by both parties of a disinterested third person as mediator, shall be commenced within 30 days of the submittal, and shall be concluded within 15 days from the commencement of the mediation unless a time requirement is extended upon a good cause showing to the court.

If the matter remains in dispute, the case shall be submitted to judicial arbitration pursuant to Chapter 2.5 (commencing with Section 1141.10) of Title 3 of Part 3 of the Code of Civil Procedure, notwithstanding Section 1114.11 of that code. The Civil Discovery Act of 1986 (Article 3 (commencing with Section 2016) of Chapter 3 of Title 3 of Part 4 of the Code of Civil Procedure) shall apply to any proceeding brought under this subdivision consistent with the rules pertaining to judicial arbitration.

In addition to Chapter 2.5 (commencing with Section 1141.10) of Title 3 of Part 3 of the Code of Civil Procedure, (A) arbitrators shall, when possible, be experienced in construction law, and (B) any party appealing an arbitration award who does not obtain a more favorable judgment shall, in addition to payment of costs and fees under that chapter, also pay the attorney's fees on appeal of the other party.

Government Code Claims. In addition to any and all contract requirements pertaining to notices of and requests for compensation or payment for extra work, disputed work, claims and/or changed conditions, CONTRACTOR must comply with the claim procedures set forth in Government Code sections 900 et seq. prior to filing any lawsuit against the CITY. Such Government Code claims and any subsequent lawsuit based upon the Government Code claims shall be limited to those matters that remain unresolved after all procedures pertaining to extra work, disputed work, claims, and/or changed conditions have been followed by CONTRACTOR. If no such Government Code claim is submitted, or if any prerequisite contractual requirements are not otherwise satisfied as specified herein, CONTRACTOR shall be barred from bringing and maintaining a valid lawsuit against the CITY. A Government Code claim must be filed no earlier than the date the work is completed or the date CONTRACTOR last performs work on the Project, whichever occurs first. A Government Code claim shall be inclusive of all unresolved claims unless a new unrelated claim arises after the Government Code claim is submitted.

Non-Waiver. CITY's failure to respond to a claim from CONTRACTOR within the time periods described in this Section or to otherwise meet the time requirements of this Section shall result in the claim being deemed rejected in its entirety. CITY's failure to respond shall not waive CITY's rights to any subsequent procedures for the resolution of disputed claims.

DRAFT

28. NON-DISCRIMINATION: Contractor represents that it is an equal opportunity employer and that it shall not discriminate against any employee or applicant for employment because of race, religion, color, national origin, ancestry, sex, age or other interests protected by the State or Federal Constitutions. Such non-discrimination shall include, but not be limited to, all activities related to initial employment, upgrading, demotion, transfer, recruitment or recruitment advertising, layoff or termination. A violation of this section exposes CONTRACTOR to the penalties provided for in Labor Code Section 1735.

29. TERMINATION: This Contract may be terminated by CITY at any time, either with our without cause, by giving CONTRACTOR three (3) days advance written notice. In the event of termination by CITY for any reason other than the fault of CONTRACTOR, CITY shall pay CONTRACTOR for all Work performed up to that time as provided herein. In the event of breach of the Contract by Contractor, CITY may terminate the Contract immediately without notice, may reduce payment to CONTRACTOR in the amount necessary to offset CITY's resulting damages, and may pursue any other available recourse against CONTRACTOR. CONTRACTOR may not terminate this Contract except for cause. In the event this Contract is terminated in whole or in part as provided, CITY may procure, upon such terms and in such manner as it may determine appropriate, services similar to those terminated. Further, if this Contract is terminated as provided, CITY may require CONTRACTOR to provide all finished or unfinished documents, data, diagrams, drawings, materials or other matter prepared or built by CONTRACTOR in connection with its performance of this Contract.

30. ANTI-TRUST CLAIMS: This provision shall be operative if this Contract Agreement is applicable to California Public Contract Code Section 7103.5. In entering into this Contract Agreement to supply goods, services or materials, Contractor hereby offers and agrees to assign to the Agency all rights, title, and interest in and to all causes of action it may have under Section 4 of the Clayton Act (15 U.S.C. Section 15) or under the Cartwright Act (Chapter 2, commencing with Section 16700, of Part 2 of Division 7 of the Business and Professions Code) arising from purchases of goods, services, or materials pursuant to the Contract Agreement. This assignment shall be made and become effective at the time the Agency tender final payment to Contractor, without further acknowledgment by the Parties.

31. NO THIRD PARTY BENEFICIARY: This Contract and every provision herein is for the exclusive benefit of the Contractor and the City and not for the benefit of any other party. There will be no incidental or other beneficiaries of any of the Contractor's or the City's obligations under this Contract.

32. TIME IS OF ESSENCE: Time is of the essence for each and every provision of the Contract Documents.

33. FORCE MAJEURE: If CONTRACTOR is delayed in the performance or progress of the work by a Force Majeure Event, then the CONTRACTOR shall be entitled

DRAFT

to a time extension, as provided in the contract documents, when the work stopped is on the critical path and shall not be charged liquidated damages. Such a non-compensable adjustment shall be CONTRACTOR's sole and exclusive remedy for such delays and the CONTRACTOR will not receive an adjustment to the contract price or any other compensation. Contractor must submit a timely request in accordance with the requirements of the contract documents. A Force Majeure Event shall mean an event that materially affects a party's performance and is one or more of the following: (1) Acts of God or other natural disasters occurring at the project site; (2) terrorism or other acts of a public enemy; (3) orders of governmental authorities (including, without limitation, unreasonable and unforeseeable delay in the issuance of permits or approvals by governmental authorities that are required for the work); (4) pandemics, epidemics or quarantine restrictions; and (5) strikes and other organized labor action occurring at the project site and the effects thereof on the work, only to the extent such strikes and other organized labor action are beyond the control of CONTRACTOR and its subcontractors, of every tier, and to the extent the effects thereof cannot be avoided by use of replacement workers. For purposes of this section, "orders of governmental authorities," includes ordinances, emergency proclamations and orders, rules to protect the public health, welfare and safety, and other actions of the City in its capacity as a municipal authority.

34. PROVISIONS REQUIRED BY LAW AND CONTRACTOR COMPLIANCE: Each and every provision of law required to be included in these Contract Documents shall be deemed to be included in these Contract Documents. The Contractor shall comply with all requirements of applicable federal, state and local laws, rules and regulations, including, but not limited to, the provisions of the California Labor Code and California Public Contract Code which are applicable to this Work.

35. ACCEPTANCE OF FACSIMILE SIGNATURES: The Parties agree that this Contract, agreements ancillary to this Contract, and related documents to be entered into in connection with this Contract will be considered signed when the signature of a party is delivered by facsimile transmission. Such facsimile signature will be treated in all respects as having the same effect as an original signature.

36. GOVERNING LAW: This Agreement shall be governed by the laws of the State of California, and exclusive venue for any action involving this Contract will be in Los Angeles County.

IN WITNESS WHEREOF, the parties hereto have executed this Agreement with all the formalities required by law on the respective dates set forth opposite their signatures.

DRAFT

State of California
CONTRACTOR'S License No. _____

CONTRACTOR

_____

_____

_____ By:_____
Date TITLE

CITY OF ROLLING HILLS, CALIFORNIA

_____ By: _____
Date JEFF PIEPER, MAYOR

ATTEST:

_____ By: _____
Date CHRISTIAN HORVATH, CITY CLERK

CONTRACTOR'S Business Phone 818-679-8059

Emergency Phone at which CONTRACTOR can be reached at any time:

(____) _____

APPROVED AS TO FORM:

_____
PATRICK DONEGAN, CITY ATTORNEY

Date

DRAFT

AGREEMENT OF INDEMNIFICATION
AND HOLD HARMLESS AND WAIVER OF SUBROGATION AND CONTRIBUTION

TENNIS COURT ADA IMPROVEMENT PROJECT
PROJECT NO. 2025-01

Contract/Agreement/License/Permit No. or description:_____

_____

Indemnitor(s) (list all names):

To the fullest extent permitted by law, Indemnitor hereby agrees, at its sole cost and expense, to defend, protect, indemnify, and hold harmless the City of Rolling Hills and its respective elected officials, officers, attorneys, agents, employees, volunteers, successors, and assigns (collectively "Indemnitees") from and against any and all damages, costs, expenses, liabilities, claims, demands, causes of action, proceedings, expenses, judgments, penalties, liens, and losses of any nature whatsoever, including fees of accountants, attorneys, or other professionals and all costs associated therewith (collectively "Liabilities"), arising or claimed to arise, directly or indirectly, out of, in connection with, resulting from, or related to any act, failure to act, error, or omission of Indemnitor or any of its officers, agents, servants, employees, subcontractors, materialmen, suppliers or their officers, agents, servants or employees, arising or claimed to arise, directly or indirectly, out of, in connection with, resulting from, or related to the above-referenced contract, agreement, license, or permit (the "Agreement") or the performance or failure to perform any term, provision, covenant, or condition of the Agreement, including this indemnity provision. This indemnity provision is effective regardless of any prior, concurrent, or subsequent active or passive negligence by Indemnitees and shall operate to fully indemnify Indemnitees against any such negligence. This indemnity provision shall survive the termination of the Agreement and is in addition to any other rights or remedies which Indemnitees may have under the law. Payment is not required as a condition precedent to an Indemnitee's right to recover under this indemnity provision, and an entry of judgment against an Indemnitee shall be conclusive in favor of the Indemnitee's right to recover under this indemnity provision. Indemnitor shall pay Indemnitees for any attorney fees and costs incurred in enforcing this indemnification provision. Notwithstanding the foregoing, nothing in this instrument shall be construed to encompass (a) Indemnitees' sole negligence or willful misconduct to the limited extent that the underlying Agreement is subject to Civil Code 2782(a), or (b) the contracting public agency's active negligence to the limited extent that the underlying Agreement is subject to Civil Code 2782(b). This indemnity is effective without reference to the existence or applicability of any insurance coverages which may have been required under the Agreement or any additional insured endorsements which may extend to Indemnitees.

Indemnitor, on behalf of itself and all parties claiming under or through it, hereby waives all rights of subrogation and contribution against the Indemnitees, while acting within the scope of their duties, from all claims, losses and liabilities arising out of or incident to

DRAFT

activities or operations performed by or on behalf of the Indemnitor regardless of any prior, concurrent, or subsequent active or passive negligence by the Indemnitees. Accountants, attorneys, or other professionals employed by Indemnitor to defend Indemnitees shall be selected by Indemnitees.

In the event there is more than one person or entity named in the Agreement as an Indemnitor, then all obligations, liabilities, covenants and conditions under this instrument shall be joint and several.

“Indemnitor”

Name_____ Name _____

By:_____ By:_____

DRAFT

City of Rolling Hills INCORPORATED JANUARY 24, 1957

Agenda Item No.: 15.A
Mtg. Date: 04/14/2025

TO: **HONORABLE MAYOR AND MEMBERS OF THE CITY COUNCIL**

FROM: **SAMANTHA CREW, MANAGEMENT ANALYST**

THRU: **KARINA BAÑALES, CITY MANAGER**

SUBJECT: **RECEIVE AND FILE A PUBLIC SAFETY AND EMERGENCY PREPAREDNESS UPDATE**

DATE: **April 14, 2025**

BACKGROUND:
Since September 2024, staff have provided the City Council with regular monthly updates outlining key developments and emerging challenges. Over the past six months, Staff has presented that the City has filed formal complaints with the California Public Utilities Commission (CPUC) against Southern California Gas Company (SoCal Gas) and Southern California Edison (SCE). Concurrently, staff have participated in ongoing meetings with utility providers, emergency services coordinators, and local and regional partners to advocate for timely resolutions.

By October 2024, 12 properties were identified as eligible for re-energization, contingent upon required permits and inspections. Discussions with SCE continued into January 2025 to explore broader solutions for all remaining affected properties.

This evening, staff will present an update on developments that have occurred since the last Public Safety Report delivered in early March (Attachment A).

DISCUSSION:
The information below outlines the City's ongoing efforts in disaster response and preparedness. Through this comprehensive Public Safety and Emergency Preparedness Report, the City is able to strategically allocate resources, identify areas for operational improvement, and continue strengthening the community's resilience to local hazards. The City also benefits from close collaboration with its neighboring Palos Verdes Peninsula cities and maintains active engagement with first response agencies to ensure coordinated and effective public safety efforts. This monthly report provides both current updates and a forward-looking perspective on future goals.

Re-Energization - SoCal Gas

Rolling Hills saw natural gas service shut off for 36 customers after the utility company claimed land movement concerns in the area. SoCal Gas installed two isolation valves to enhance public safety by enabling targeted control of gas flow to streets affected by land movement. Additionally, 26 new survey points were installed throughout the community to improve the
monitoring of land movement rates.

In early February, City staff and Councilmember Leah Mirsch met with SoCal Gas to discuss ongoing assessments and restoration plans. The utility company reported progress on their stress/strain model and noted that pipe samples had been collected to evaluate durability and elasticity.

A final design and implementation plan is expected by the second quarter of 2025. Currently the design is 95% complete. If land movement remains minimal, restoration work could begin shortly thereafter.

Preliminary plans include adding above-ground piping and swing joints in the Flying Triangle area, Cinchring Road, and Quailridge Road South. Additional safety measures include excess flow valves, pressure monitoring devices, and manual shut-off valves at key locations.

SoCalGas intends to distribute a survey to residents whose gas service was disconnected in September, inquiring whether they are interested in having service restored.

City staff are coordinating with SoCal Gas to schedule a community event where residents can learn more about the restoration process. The meeting will provide an overview of what to expect during the gas service restoration process, including the steps required to safely turn service back on, billing information, and available options for restoring service versus opting out. Once the date and agenda for the town hall are finalized, they will be made available to the community.

Re-Energization - SCE

As power restoration continues, SCE, alongside LA County Building and Safety, Willdan, and the Fire Department, remains active in inspecting properties for safety and compliance. To support this effort, the City holds weekly coordination meetings with these agencies.

At the time this report was written, a total of 37 properties have been re-energized to date. Six customers have opted not to restore power, and eight properties remain without service. City staff continue to coordinate with contractors, SCE, the Fire Department and property owners to facilitate the restoration process for the remaining properties.

Siren System

At the last City Council meeting, staff presented an update on the Emergency Outdoor Siren Notification System and introduced the Alert and Warning Standard Operating Procedure (SOP). The Council adopted the SOP as a living document and directed staff to continue working with the Ad Hoc Committee to refine the document. This SOP will serve as the operational framework for activating and maintaining the City's emergency alert systems, including sirens, the SAFE network, and other communication tools.

The City Council also considered funding options for the distribution of SAFE Network Units, which are part of the City's broader emergency communication enhancements made possible through a Community SAFE Grant. After discussion, the Council selected Option B, placing the responsibility for purchasing SAFE Units on residents. This approach minimizes administrative burden and clarifies ownership, allowing homeowners to manage their own devices.

Staff was informed late in the morning on Friday, April 4, that HQE would be conducting minor sound testing in areas identified as having limited or no sound. The testing involved the use of

small speakers mounted on a truck and was confined to specific locations. It was not intended to be loud or disruptive. All testing activities were completed within approximately four hours.
City staff participated in a SiSA system training with HQE, the siren system vendor, on April 8. This training represented a key milestone toward the City assuming full operational control of the emergency siren system.
Looking ahead, an Alert and Warning Standard Operating Procedure Manual, providing detailed, step-by-step guidance for City staff, emergency personnel, and mutual aid partners will be forthcoming. More staff training will be required prior to its finalization to ensure effective implementation.

Emergency Generator
S&K submitted plans for the Dual Fuel Emergency Generator Backup project to Los Angeles County Building and Safety in February, and staff has requested an expedited review. Plans were also submitted to the City of Rolling Hills Estates and have received initial approvals; however, the plan check review by Willdan is still pending. Staff will follow up with contacts at Willdan to help move the process forward. In addition, S&K is working closely with the Los Angeles County Fire Department, which is expediting its review, with a meeting scheduled next week to review the plans in detail.

Fire Hazard Severity Zone Maps
The Office of the State Fire Marshal (OSFM) released the updated Local Responsibility Area (LRA) Fire Hazard Severity Zone (FHSZ) Maps on March 24, 2025. In compliance with state requirements, the City is responsible for making the maps available for public review and comment within 30 days of their release. Following the conclusion of the public notice and comment period, the City will be required to formally adopt the designation through a local ordinance within 120 days. Staff will bring this item back to the City Council after the public review period and will request that the Council formally adopt the designation in accordance with state law.

Assemblymember Muratsuchi's PVP Wildfire Town Hall: Lessons from the LA Wildfires
Assemblymember Al Muratsuchi, in collaboration with the Cities of Rancho Palos Verdes, Palos Verdes Estates, Rolling Hills Estates, and Rolling Hills, is hosting a Wildfire Preparedness Town Hall and Expo on Saturday, April 26, from 9:00 a.m. to 12:00 p.m. at Fred Hesse, Jr. Community Park, located at 29301 Hawthorne Blvd., Rancho Palos Verdes. The event will focus on lessons learned from the January wildfires and provide important information on how to prepare for future wildfire risks. Key presenters include the California Department of Insurance, Los Angeles County Sheriff's Department, Los Angeles County Fire Department, and the Palos Verdes Peninsula Unified School District. The expo will also feature informational booths from the Palos Verdes Peninsula cities.

FISCAL IMPACT:
None.

RECOMMENDATION:
Receive and file.

ATTACHMENTS:
Attachment A - CL_AGN_CC_250310_CC_15A_Matters_Staff_PublicSafety.pdf

Agenda Item No.: 15.A
Mtg. Date: 03/10/2025

TO: **HONORABLE MAYOR AND MEMBERS OF THE CITY COUNCIL**

FROM: **SAMANTHA CREW, MANAGEMENT ANALYST**

THRU: **KARINA BAÑALES, CITY MANAGER**

SUBJECT: **RECEIVE AND FILE A PUBLIC SAFETY AND EMERGENCY PREPAREDNESS UPDATE**

DATE: **March 10, 2025**

BACKGROUND:

Public safety remains a top priority for Rolling Hills. The City is actively enhancing disaster preparedness, managing the Emergency Operations Center, and coordinating with first responders. In response to unexpected utility shutoffs in 2024, the City has been working to support affected residents. Since September, Staff has provided the City Council with monthly status updates on developments and emerging issues. Over the past six months, the City Council filed complaints with the CPUC against SoCal Gas and SCE while staff engaged in meetings with utility providers, emergency services coordinators, and local partners. By October, 12 properties were deemed eligible for re-energization, and in January 2025, discussions with SCE continued to identify solutions for all affected properties.

This evening, staff will provide an update on events subsequent to the last public safety report from early February (Attachment A).

DISCUSSION:

The following details the City's ongoing efforts in disaster response and readiness. Through a comprehensive Public Safety and Emergency Preparedness Report, the City can strategically allocate resources, identify areas for improvement and strengthen the community's resilience to local hazards. The City benefits from close collaboration with the other Palos Verdes Peninsula cities on public safety initiatives and works alongside first responders to ensure all partners remain actively engaged. This monthly report provides timely updates and looks ahead to future goals.

Re-Energization

Early February, City staff and Councilmember Leah Mirsch, met with SoCal Gas to discuss ongoing assessments and restoration efforts. The utility company reported that their team had collected pipe samples and was nearing completion of their stress/strain model, highlighting the durability and elasticity of the pipes installed in those areas.

More recently SoCal Gas shared they had installed 26 survey points in the City to enhance monitoring and data collection. These installations have supplemented their ongoing efforts to measure potential movement in the areas where they have pipeline infrastructure. The utility company is also developing a "pipe response model," to assess stress and strain on their underground and above ground pipes, based on historical and potential future land movement. SoCal Gas expects to finalize their design and implementation plan by the second quarter of 2025.

At that time, if land movement rates remain minimal and conditions permit, they anticipate beginning the necessary work to restore service safely. Based on the collected pipe sampling data, they are considering adding more above-ground pipes and swing joints in the Flying Triangle area, as well as potentially along Cinchring Road and Quailridge Road South.

Furthermore, SoCal Gas are focused on safety strategies that include installing excess flow valves at strategic locations on the main line to sense when there is a line break and automatically shut off the flow of gas. Also, pressure monitoring devices will be installed that can sense line breaks and alert the main control center to respond. Manual valves will also be installed and available so that SoCal Gas crew members can adjust as needed.

Staff are working with SoCal Gas to schedule a community event for residents to learn about the restoration of their gas services.

SCE

As restoration of electrical power progresses, Southern California Edison (SCE), in partnership with Los Angeles County Building and Safety, Willdan, and the Los Angeles County Fire Department, continue to inspect properties to ensure safety and compliance. To expedite the process, City staff and these agencies hold weekly coordination meetings, fostering effective communication and steady progress.

On Wednesday, March 5, Staff coordinated with SCE, LA County Public Works, Willdan, and solar companies to assist residents in restoring power to additional properties. As of this report, power has been restored to 32 properties, while six have opted out, leaving 13 of the 51 properties still awaiting restoration.

Rotary Club Relief Fund

The Rotary Club of Palos Verdes Peninsula has reported an increase in the relief fund from $160,000 to just under $175,000, which will be distributed among residents of Rolling Hills and Rancho Palos Verdes. The deadline for Rotary applications was extended from the original date of February 21 to March 2. Homeowners affected by utility shut-offs on Cinchring, Spur Lane, Quailridge Road South, or in the Flying Triangle neighborhood are eligible to apply. Twenty-two (22) applications were received from Rolling Hills residents and have been submitted to the Rotary Club by the City.

Siren Update:

On Tuesday, March 4, from 8:30 AM to 11:30 AM, HQE conducted the first full-system test at the optimal hertz level determined during the late November tests. Sound levels were measured from nine locations, with Block Captains also monitoring areas previously identified as challenging due to the City's topography. Residents were notified in advance through Dwelling Live and the City's alert system, Alert SouthBay. The notification included a downloadable FAQ document to provide more information about the siren system and its capabilities. Following the test, HQE distributed a post-test survey to residents to gather feedback on the system's performance.

Staff will return at the March 24 City Council meeting with additional information.

Assemblymember Muratsuchi's PVP Wildfire Town Hall: Lessons from the LA Wildfires

The event, set for April 26 at Hesse Park in Rancho Palos Verdes, will highlight key topics including the January wildfires, the effects of climate change, strategies for home hardening and prevention, and local emergency preparedness. Recently, City Managers and staff met to plan the upcoming wildfire town hall, discussing the event date, presentations, and each city's responsibilities. Further details will be provided as planning progresses. Experts from the California Department of Forestry and Fire Protection, NASA Jet Propulsion Laboratory and the Los Angeles County Sheriff's Department will share valuable insights and safety strategies. Additionally, Rolling Hills will have a booth set up at the event.

Home Hardening Videos

In partnership with the Los Angeles County Fire Department, the Block Captain Program produced two sets of five comprehensive educational videos on effective home hardening against wildfires and fire fuel management in canyons. On March 6, the Block Captains hosted a Home Hardening Video Event, bringing the community together to watch the video in a shared setting and promote wildfire preparedness. Given the recent wildfires, this was a valuable opportunity to educate and support our community in strengthening their own preparedness efforts while exploring effective strategies for home hardening against fire.

The City remains committed to disaster preparedness, public safety, and community resilience. Through collaboration with regional partners, utility companies, and first responders, significant progress has been made in power restoration, emergency response planning, and wildfire preparedness. Ongoing efforts, including utility restoration, siren testing, and public safety initiatives, demonstrate the City's proactive approach. Future events, such as the wildfire town hall and continued community outreach, will further strengthen preparedness efforts. The City will continue to provide timely updates and work closely with residents to ensure safety and readiness for any challenges ahead.

FISCAL IMPACT:
None.

RECOMMENDATION:

Receive and file.

ATTACHMENTS:
CL_AGN_CC_250210_Item15A_PublicSafetyReport.pdf

City of Rolling Hills INCORPORATED JANUARY 24, 1957

Agenda Item No.: 15.B
Mtg. Date: 04/14/2025

TO: **HONORABLE MAYOR AND MEMBERS OF THE CITY COUNCIL**

FROM: **CHRISTIAN HORVATH, CITY CLERK / EXECUTIVE ASSISTANT TO CITY MANAGER**

THRU: **KARINA BAÑALES, CITY MANAGER**

SUBJECT: **CONSIDERATION OF A JOINT PENINSULA CITIES LETTER TO GOVERNOR GAVIN NEWSOM REQUESTING A MORATORIUM ON HOUSING LEGISLATION THAT CREATE FURTHER DENSITY IN CALFIRE-DESIGNATED VERY HIGH FIRE HAZARD SEVERITY ZONES**

DATE: **April 14, 2025**

BACKGROUND:
Following a series of devastating fires late last year and again in January, officials from the four Peninsula cities Palos Verdes Estates, Rancho Palos Verdes, Rolling Hills Estates, and Rolling Hills discussed the potential impact of State mandates that require cities to zone for increased housing in CalFIRE-designated Very High Fire Hazard Severity Zones. These legislative mandates are often issued without consideration of a region's vulnerabilities, which range from limited ingress/egress, emergency infrastructure, water supply, or wildfire exposure.

DISCUSSION:
The attached letter urges the Governor to place a moratorium on any new housing legislation, as cities balance previous housing requirements with emergency preparedness efforts in the wake of recent wildfires in Los Angeles and other parts of the state.

One example is the recently introduced SB 677 (Weiner) which aims to "strengthen two of California's landmark housing streamlining laws" but does not consider the growing risks to communities in Very High Fire Hazard Severity Zones. The entire Palos Verdes Peninsula, as well as communities affected by the Palisades, Eaton, Franklin, and Mountain fires, all sit within the Very High or High Fire Severity Zones.

The City of Rolling Hills, along with the other Peninsula cities, has worked closely with the State and the Department of Housing and Community Development (HCD) to comply with all housing and safety element requirements. However, in light of the recent wildfires, staff requests the City Council consider authorizing the Mayor to sign and send the joint letter to

Governor Newsom, requesting that his office place a moratorium on any further legislation of this type and let the Peninsula and other communities focus on reducing hazard risks and strengthening disaster readiness.

The cities of Palos Verdes Estates, Rolling Hills Estates, and Rancho Palos Verdes have signed the attached joint letter.

FISCAL IMPACT:
None.

RECOMMENDATION:
Approve as presented.

ATTACHMENTS:
CL_AGN_250414_CC_PVP_HousingLetter_F_PE.pdf

RANCHO PALOS VERDES

April 15, 2025

Governor Gavin Newsom
1021 O Street, Suite 9000
Sacramento, CA 95814

RE: Request for Moratorium on Further Legislation Aimed at Creating Housing Density Requirements and Enforcement Mechanisms in CalFIRE-Designated Very High Fire Hazard Severity Zones

Dear Governor Newsom,

On behalf of the residents of the Palos Verdes Peninsula, the City Councils of Rancho Palos Verdes, Palos Verdes Estates, Rolling Hills Estates, and Rolling Hills respectfully request your urgent action to halt further legislation in CalFIRE-designated Very High Fire Hazard Severity Zones (VHFHSZ) throughout California.

The Palos Verdes Peninsula and other similar areas across the state face extreme wildfire risks. The devastating fires in the Pacific Palisades and Altadena highlight the significant dangers to human life and property in fire-prone regions. These incidents underscore the critical need to prioritize public safety over urban densification in these vulnerable zones.

The traffic jam on residential streets that resulted from evacuation of Palisades residents during the Palisades Fire forced people to abandon their cars and flee the fire on foot. Firefighters had to use bulldozers to remove vehicles blocking critical access routes. Insufficient parking and narrow streets not only affected the timely evacuation of residents and deployment of firefighting resources but also delayed protection for structures. This highlights the dire consequences of inadequate infrastructure in VHFHSZ when density increases without proper planning or access.

Each of the Palos Verdes Peninsula Cities has worked closely with the State and the Department of Housing and Community Development (HCD) to comply with housing and safety element requirements. This commitment has been maintained despite escalating concerns from residents over public safety, particularly as it relates to the compounding risks of wildfires, evacuation logistics, and inadequate infrastructure in VHFHSZ.

In 2020, the Legislature passed SB 182, which would have required that new housing developments in very high fire zones include various elements to better withstand wildfires. SB 182 would have mandated design elements such as evacuation routes, vegetation management, and fire-safe

construction. It also would have required the regional housing needs allocation plan to further the objective of reducing development pressure within very high fire risk areas. Unfortunately, you vetoed that legislation.

Going forward, it is critical that future legislation will address concerns in VHFHSZ and consider the following:

1. **Narrow Streets and Limited Access:** Many areas on the Peninsula and other VHFHSZ locations are served by narrow, winding streets constructed decades ago that are already inadequate for current traffic volumes. These streets were designed based on density at that time and cannot accommodate increased density without creating severe risks during wildfire evacuations.

2. **Congested Evacuation Routes**: With limited exit points from the Peninsula, increased population density would create potentially fatal bottlenecks during mandatory evacuations. Palos Verdes Boulevard is the only exit route for much of the peninsula, and Palos Verdes Drive South is undergoing constant repair due to land movement caused by the Ancient Portuguese Bend Landslide Complex.

3. **Inadequate Emergency Infrastructure**: Current infrastructure, including insufficient parking and limited access for emergency vehicles, further exacerbates the risk to residents and first responders in fire emergencies. As seen in the Pacific Palisades fire, delays caused by parked vehicles blocking emergency access could be the difference between saving lives and catastrophic loss.

4. **Increased Wildfire Vulnerability**: Higher-density housing developments in fire-prone areas increase ignition sources and complicate fire suppression efforts, putting more lives and structures at risk.

5. **Strained Water Supply**: The Palos Verdes Peninsula and other VHFHSZ locations rely on limited water resources for residential, commercial, and firefighting needs. Increased housing density would significantly strain this already limited water supply, jeopardizing the region's ability to respond effectively to wildfire emergencies and threatening the long-term sustainability of these communities.

Recently, SB 677 was introduced by Senator Scott Weiner. The Bill aims to "strengthen two of California's landmark housing streamlining laws." What it doesn't do is consider the growing risks of communities in VHFHSZ. If approved, SB 677 would place further strain on local governments already trying to accommodate a package of previous legislation that aim to create housing opportunities but limit local considerations.

It is difficult to comprehend the introduction and possible passing of this type of legislation as communities are still recovering from the January fires or finding ways to work with their public safety partners to prepare for the next firestorm.

On behalf of the over 100,000 residents of the Palos Verdes Peninsula and other communities in VHFHSZ throughout the State of California, we implore you to reject and place a moratorium on any further legislation of this type and let our communities focus on preparedness that will help avoid the next disaster.

Sincerely,

David L. Bradley, Mayor
Rancho Palos Verdes

Victoria A. Lozzi, Mayor
Palos Verdes Estates

Debby Stegura, Mayor
Rolling Hills Estates

Jeff Pieper, Mayor
Rolling Hills

CC: The Honorable State Senator Ben Allen
The Honorable State Assemblymember Al Muratsuchi
Los Angeles County Board of Supervisors Fourth District Janice Hahn
Jeff Kiernan, League of California Cities
Rancho Palos Verdes City Council
Palos Verdes Estates City Council
Rolling Hills Estates City Council
Rolling Hills City Council

City of Rolling Hills INCORPORATED JANUARY 24, 1957

Agenda Item No.: 16.A
Mtg. Date: 04/14/2025

TO: HONORABLE MAYOR AND MEMBERS OF THE CITY COUNCIL

FROM: CHRISTIAN HORVATH, CITY CLERK / EXECUTIVE ASSISTANT TO CITY MANAGER

THRU: KARINA BAÑALES, CITY MANAGER

SUBJECT: EXISTING LITIGATION - GOVERNMENT CODE SECTION 54956.9(D)(1) THE CITY FINDS, BASED ON ADVICE FROM LEGAL COUNSEL, THAT DISCUSSION IN OPEN SESSION WILL PREJUDICE THE POSITION OF THE CITY IN THE LITIGATION. (1 CASE)
a. NAME OF CASE: CONNIE ANDERSEN, ET AL. V. CALIFORNIA WATER COMPANY, ET AL. (SEAVIEW CASE) CASE NO.: 24STCV20953

DATE: April 14, 2025

BACKGROUND:
None.

DISCUSSION:
None.

FISCAL IMPACT:
None.

RECOMMENDATION:
None.

ATTACHMENTS:

City of Rolling Hills INCORPORATED JANUARY 24, 1957

Agenda Item No.: 16.B
Mtg. Date: 04/14/2025

TO: **HONORABLE MAYOR AND MEMBERS OF THE CITY COUNCIL**

FROM: **CHRISTIAN HORVATH, CITY CLERK / EXECUTIVE ASSISTANT TO CITY MANAGER**

THRU: **KARINA BAÑALES, CITY MANAGER**

SUBJECT: **CONFERENCE WITH LEGAL COUNSEL - EXISTING LITIGATION GOVERNMENT CODE SECTION 54956.9 (TWO CASES) CPUC COMPLAINTS AGAINST SOUTHERN CALIFORNIA EDISON AND SOCAL GAS**

DATE: **April 14, 2025**

BACKGROUND:
None.

DISCUSSION:
None.

FISCAL IMPACT:
None.

RECOMMENDATION:
None.

ATTACHMENTS:

City of Rolling Hills INCORPORATED JANUARY 24, 1957

Agenda Item No.: 16.C
Mtg. Date: 04/14/2025

TO: **HONORABLE MAYOR AND MEMBERS OF THE CITY COUNCIL**

FROM: **CHRISTIAN HORVATH, CITY CLERK / EXECUTIVE ASSISTANT TO CITY MANAGER**

THRU: **KARINA BAÑALES, CITY MANAGER**

SUBJECT: **CONFERENCE WITH LEGAL COUNSEL - INITIATION OF LITIGATION GOVERNMENT CODE SECTION 54956.9(D)(1) THE CITY FINDS, BASED ON ADVICE FROM LEGAL COUNSEL, THAT DISCUSSION IN OPEN SESSION WILL PREJUDICE THE POSITION OF THE CITY IN THE LITIGATION. (1 CASE)**

DATE: **April 14, 2025**

BACKGROUND:
None.

DISCUSSION:
None.

FISCAL IMPACT:
None.

RECOMMENDATION:
None.

ATTACHMENTS:

City of Rolling Hills INCORPORATED JANUARY 24, 1957

Agenda Item No.: 16.D
Mtg. Date: 04/14/2025

TO: **HONORABLE MAYOR AND MEMBERS OF THE CITY COUNCIL**

FROM: **CHRISTIAN HORVATH, CITY CLERK / EXECUTIVE ASSISTANT TO CITY MANAGER**

THRU: **KARINA BAÑALES, CITY MANAGER**

SUBJECT: **PUBLIC EMPLOYEE PERFORMANCE EVALUATION PURSUANT TO GOVERNMENT CODE SECTION 54957 TITLE: CITY ATTORNEY**

DATE: **April 14, 2025**

BACKGROUND:
None.

DISCUSSION:
None.

FISCAL IMPACT:
None.

RECOMMENDATION:
None.

ATTACHMENTS: