TOWN OF
SAN ANSELMO
EST. 1907

525 San Anselmo Avenue
San Anselmo, CA 94960

Town Council

Agenda

Tuesday, June 28, 2022	7:00 PM	Town Council Chambers

https://us02web.zoom.us/j/87490306845

Or Telephone: +1 669 900 6833 | Webinar ID: 874 9030 6845

How to Submit Comments Before the Meeting: Members of the public are encouraged to submit email correspondence to towncouncil@townofsananselmo.org before the meeting begins.

How to Participate During the Meeting: Members of the public will have the option to speak during the meeting through the Zoom application by using their phone or an electronic device.

For PC, Mac, or smart phone, Use "Raise hand" function when public comment for an item is requested. It is a button that is located at the top or bottom of your screen, based on your computer

For landline phones, raise hand to be recognized with *9

Call to Order. Optional Pledge of Allegiance: The Mayor or a designated Council member will recite the Pledge of Allegiance for members of the Council and the public who wish to join in the recitation.

Open time for public expression.

The public is welcome to address the Council at this time on matters not on the agenda that are within the jurisdiction of the Council. Please be advised that pursuant to Government Code Section 54954.2, Council is not permitted to discuss or take action on any matter not on the agenda unless it determines that an emergency exists, or that there is a need to take immediate action which arose following posting of the agenda. Comments may be no longer than three minutes and should be respectful to the community.

Further Public Comment

Attachments: Further Public Comment

Council requests for future agenda items.

Council committee liaison reports, questions and comments to staff; staff miscellaneous items.

1. Consent Agenda:

The opportunity for public comment on consent agenda items will occur prior to Council discussion of the consent agenda. The Council may approve the entire consent agenda with one action. In the alternative, items on the consent agenda may be removed by any Council or staff member, for separate discussion and vote.

1.1. 2022-2023 Budget and Workplan

Attachments: Staff Report
Attachment 1 - 2022-2023 Proposed Budget
Attachment 2 - 22-23 Resolution for Budget Adoption

1.2. Marin IT Agreements

Attachments: Staff Report
Attachment #1 - Marin IT Agreements

1.3. Memorial Park Athletic Field Renovation Project

Attachments: Staff Report
Attachment #1: Memorial Park, Const Document Planset

1.4. Adoption of an Ordinance Amending the San Anselmo Municipal Code adding Chapter 24 “All Electric Construction in Newly Constructed Residential Buildings” to Title 9 “Building Regulations”; and Amendment to Chapter 9-19 “Green Building Requirements” for consistency.

Attachments: Staff Report
Ordinance Amendment All Electric Construction.pdf

1.5. Revenue and Expenditure Reports, May 2022

Attachments: Staff Report
Budget Comparison Report - San Anselmo, CA_Sub_MAY 2022
Budget Comparison Report - San Anselmo, CA_Dept_MAY 2022

1.6. May Financial Report on Recreation Fund

Attachments: Staff Report
May 2022-Attachment

1.7. Confirm the Recommended Appointments to the Housing Element Advisory Committee

Attachments: Staff Report
HEAC Applications Received

1.8. Minutes of June 14, 2022

Attachments: Attachment 1 - June 14, 2022 Minutes

1.9. Authorize the mayor to send a letter in opposition to Senate Bill (SB) 396 (Dahle) - Forestry: electrical transmission or distribution lines: clearances: notice and opportunity to be heard.

Attachments: Staff Report
Attachment 1 - Letter Opposing SB 396
Attachment 2 - SB 396

1.10 Consider Adoption of Resolution to Allow for Virtual Town Council Meetings in Compliance with AB 361.

Attachments: Staff Report
Resolution

Council Items:

2. Appoint applicants to the Planning Commission

Attachments: Staff Report
Attachment 1 - Boards and Commission Status Report
Attachment 2 - Kim Pipkin
Attachment 3 - Mark M. Haddix
Attachment 4 - Peter Thomas Strauss

3. Discussion and Consideration of Memorandum of Understanding Proposal with the Service Employees International Union, Local 1021 (SEIU) for the period of July 1, 2022, to June 30, 2025.

Attachments: Staff Report
Attachment #1: Tentative Agreement - SEIU

4. San Anselmo Sales Tax & Library Parcel Tax Renewals

Attachments:
Staff Report
Attachment #1: Sales Tax Measure Resolution draft
Attachment #2: Sales Tax Ordinance draft
Attachment #3: Library Tax Resolution draft
Attachment #4: Library Tax Ordinance draft

5. Review and Provide Guidance Regarding Regulations of the Town's Parklet Program

Attachments:
Staff Report
Attachment 1 9.28.21 Parklet Staff Report.pdf
Attachment 2 11.9.21 Parklet Staff Report.pdf
Attachment 3 Parking Study.pdf
Attachment 4 Parklet Survey.pdf
Attachment 5 Ongoing Parklet Program - Agreement_Guidelines_Healdsburg.pdf
Attachment 6 Public Comment
Attachment 7 Further Public Comment

6. Report to the Town Council Summarizing the Work of the Racial Equity Ad Hoc Committee

Attachments:
Staff Report
Attachment #1 - Racial Equity Ad Hoc Committee Resolution 11.10.10
DRAFT Racial Equity Committee Resolution
DEI Firm Submissions list
ReadySet_RFP Response - UPDATE Mar 2022
SA Racial Equity Committee Statement
June 28 Council Mtg - Letter Supporting Racial Equity Committee - Weller

Adjourn

In compliance with the Americans with Disabilities Act, if you need special assistance to participate in this meeting, please contact Town Staff at email rclifford@townofsananselmo.org. Notification at least 48 hours prior to the meeting will enable the Town to make reasonable accommodation to help insure accessibility to this meeting.

Any writings or documents provided to a majority of the Town Council regarding any item on this agenda after the distribution of the original packet will be made available for public inspection at the public counter at Town Hall located at 525 San Anselmo Avenue.

Notice is hereby given that Council may discuss and/or take action on any or all of the items listed on this agenda. If any of these matters above are challenged in court, you may be limited to raising only those issues you or someone else raised at any public hearing described on this agenda, or in written correspondence delivered at, or prior to, this Council meeting. Judicial review of an administrative decision of the Town Council must be filed with the Court not later than the 90th day following the date of the Council's decision (Code of Civil Procedure Section 1094.6) Any item not under discussion before 10:00 p.m. may be continued to the next regular meeting. Next regular meeting is Tuesday, July 26, 2022.

I certify that this agenda was posted on the Public Notice Bulletin Board on or before Friday, June 24, 2022.

_____

Carla Kacmar, Town Clerk

Robyn Clifford

From: Brian Sagar <fairfaxca@gmail.com>
Sent: Wednesday, June 22, 2022 11:33 PM
To: Town Council
Cc: backerman@townoffairfax.org; shellman@townoffairfax.org; bcoler@townoffairfax.org; ccutrano@townoffairfax.org; Renee Goddard
Subject: Possible Firesafe banner...

CAUTION: External Sender

Fairfax & San Anselmo town council members,

Please consider using your banner area over SFD in both Fairfax and San Anselmo to remind people that "Fireworks are illegal" and any other information that seems fit.

Or something like: Be Firesafe, report illegal fireworks. Maybe work with Firesafe?

Small price to pay...just for cost of a banner. Reuse each year. A few days before the 4th of July and New Years.

Maybe our firesafe service would fund this. Rent space.

Brian Sagar

Sent from my iPhone

Robyn Clifford

From: René Voss <renepvoss@gmail.com>
Sent: Thursday, June 23, 2022 10:13 PM
To: Sean Condry
Cc: Steve Burdo; Alexis Fineman; Brian Colbert; Eileen Burke; Ford Greene; Megan Acevedo; Carla Kacmar; Dave Donery; Maxwell Pritt; Abby Cunningham; Jonathan Braun; brian@briancrawford.info; Stanley Dale Radtke; Danny Krebs; Kathy Sanders; Nancy Grover; Mindy Stomp; Henry Pratt; Heidi Scoble; Mark Van Gorder
Subject: Nonsensical Tree Cutting in Faude Park Again - Today

CAUTION: External Sender

Town Council and Staff, Members of the Open Space Committee,

cc: Mark van Gorder

Brian Crawford alerted me today that PG&E was back in Faude Park cutting a tree across from his house on Oakland. It was Rancho Tree Services who had returned, this time with a PG&E representative in tow, to finish cutting down a dead tree in the park that they had topped weeks ago (before I stopped them). It made no sense because the tree was easily 60+ feet away from the power line and only 40 feet tall, meaning it could not have possibly reached the line if it fell.

Recall that on Tue, May 24, 2022 at 3:08 PM Sean Condry told us by email:

> Hi Rene:
>
> I just met with PG&E head landscape maintenance guy about this and they have agreed when possible to only remove the portion of the tree that threatens their lines/poll. This will be discussed tonight.
>
> Sean

Obviously PG&E did not get the message or did not convey it, but I think they were back trying to assert their authority, despite the total waste of time and money to avert a hazard that didn't exist. I asked the PG&E representative to stop, but he refused and threatened to call "the Sheriff" on me. He was not from around here, didn't know he was in a town, since he is based out of Vallejo. So instead, I tried to call Sean and left a voicemail and text, without response, but I also called the police to report illegal tree cutting in our park. Roughly 10 minutes later an officer arrived and spoke to the PG&E representative. The officer told me he would return to speak to me, but instead he left without letting me know he was leaving. I later called dispatch and left a message, asking the officer to contact me to follow-up about the incident.

The PG&E representative's name was Paul Gibson, the Vegetation Program Manager for the North Bay from Vallejo, CA. His phone number is 707-293-8318 and his email is P3gf@pge.com. I asked for paperwork, and he refused to let me see it. I asked for his boss' name, but he said his boss was on vacation. I pressed him, and he said his boss was Tony Walls at 707-293-8318.

After they had finished cutting down the tree, I asked, and they agreed, to leave the cut tree boles in the park for wildlife habitat in a way that they wouldn't roll down the slope. I also asked whether they were going to chip the smaller material, and they said they planned to. So I asked whether they would haul out the smaller material rather than chipping it. I stressed to Gibson that a chipper violates our noise ordinance, and he said that PG&E was working on the issue, but agreed that it probably did violate noise ordinances in our area. So PG&E and the Rancho crew agreed to haul out the material in their grappler truck without chipping it in our neighborhood.

This is all so nonsensical, and I urge the Town Council to re-agendize this issue. I also urge the Council to direct staff to require that PG&E go through the necessary permitting process before cutting any more trees in our parks or open space.

Thank you for your attention to this issue,

René Voss

Attorney at Law

415-446-9027

Robyn Clifford

From: Abby <abbywords@gmail.com>
Sent: Friday, June 24, 2022 6:48 AM
To: René Voss
Cc: Alexis Fineman; Brian Colbert; Carla Kacmar; Danny Krebs; Dave Donery; Eileen Burke; Ford Greene; Heidi Scoble; Henry Pratt; Jonathan Braun; Kathy Sanders; Mark Van Gorder; Maxwell Pritt; Megan Acevedo; Mindy Stomp; Nancy Grover; Sean Condry; Stanley Dale Radtke; Steve Burdo; brian@briancrawford.info
Subject: Re: Nonsensical Tree Cutting in Faude Park Again - Today

CAUTION: External Sender

This has to stop. I understood from council members Burke, Green, and mayor Fineman at the May 24th town council meeting that the council would agendize this issue. I have been told by a reliable source that PG&E vegetation management contractors must be union contractors. I urge you to investigate whether or not Rancho Tree Service was in compliance—and whether or not the agreement between Sean and PG&E was binding.

Thank you,

Abby

On Thu, Jun 23, 2022 at 10:13 PM René Voss <renepvoss@gmail.com> wrote:

Town Council and Staff, Members of the Open Space Committee,

cc: Mark van Gorder

Brian Crawford alerted me today that PG&E was back in Faude Park cutting a tree across from his house on Oakland. It was Rancho Tree Services who had returned, this time with a PG&E representative in tow, to finish cutting down a dead tree in the park that they had topped weeks ago (before I stopped them). It made no sense because the tree was easily 60+ feet away from the power line and only 40 feet tall, meaning it could not have possibly reached the line if it fell.

Recall that on Tue, May 24, 2022 at 3:08 PM Sean Condry told us by email:

Hi Rene:

I just met with PG&E head landscape maintenance guy about this and they have agreed when possible to only remove the portion of the tree that threatens their lines/poll. This will be discussed tonight.

Sean

Obviously PG&E did not get the message or did not convey it, but I think they were back trying to assert their authority, despite the total waste of time and money to avert a hazard that didn't exist. I asked the PG&E representative to stop, but he refused and threatened to call "the Sheriff" on me. He was not from around here, didn't know he was in a town, since he is based out of Vallejo. So instead, I tried to call Sean and left a voicemail and text, without response, but I also called the police to report illegal tree cutting in our park. Roughly 10

minutes later an officer arrived and spoke to the PG&E representative. The officer told me he would return to speak to me, but instead he left without letting me know he was leaving. I later called dispatch and left a message, asking the officer to contact me to follow-up about the incident.

PUBLIC COMMENT

The PG&E representative's name was Paul Gibson, the Vegetation Program Manager for the North Bay from Vallejo, CA. His phone number is 707-293-8318 and his email is P3gf@pge.com. I asked for paperwork, and he refused to let me see it. I asked for his boss' name, but he said his boss was on vacation. I pressed him, and he said his boss was Tony Walls at 707-293-8318.

After they had finished cutting down the tree, I asked, and they agreed, to leave the cut tree boles in the park for wildlife habitat in a way that they wouldn't roll down the slope. I also asked whether they were going to chip the smaller material, and they said they planned to. So I asked whether they would haul out the smaller material rather than chipping it. I stressed to Gibson that a chipper violates our noise ordinance, and he said that PG&E was working on the issue, but agreed that it probably did violate noise ordinances in our area. So PG&E and the Rancho crew agreed to haul out the material in their grappler truck without chipping it in our neighborhood.

This is all so nonsensical, and I urge the Town Council to re-agendize this issue. I also urge the Council to direct staff to require that PG&E go through the necessary permitting process before cutting any more trees in our parks or open space.

Thank you for your attention to this issue,

René Voss

Attorney at Law

415-446-9027

Robyn Clifford

From: Robyn Clifford
Sent: Monday, June 27, 2022 12:26 PM
To: Robyn Clifford
Subject: FW: Town Council Meeting

On Sat, Jun 25, 2022 at 2:48 AM Navruz Avloni <navruz.avloni@gmail.com> wrote:

Dear Town Mayor and Council Members:

I respectfully submit this brief statement in support of the Town Council establishing the Racial Equity Committee as a standing committee. Turning on the evening news shows the ugly truth that racial injustice is widespread. And as we know - racism is alive in our very own close-knit and beautiful community of San Anselmo. Just this past year alone, we've seen conduct ranging from antisemitism in our community park to racism directed at our very own former mayor. In light of this, creating a standing Racial Equity Committee is not just a good idea, it's necessary if we believe in being an inclusive town where all residents, regardless of their color, race, ethnicity, etc., feel not just comfortable but are able to equally thrive.

I am looking forward to seeing the Town Council approve this Resolution, and then seeing the Committee build capacity over the next few years to effectuate long term progress in this area as well as send a crystal clear message to our community that bigotry and racism are not welcome in our town.

Thank you for taking the time to read this.

Navruz Avloni, resident of San Anselmo.

Town of San Anselmo

525 San Anselmo Avenue
San Anselmo, CA 94960

Staff Report

TO: Town Council | 6/28/2022 | **Item #:** 1.1.

FROM:
Jeff Zuba, Finance & Administrative Services Director

SUBJECT:
2022-2023 Budget and Workplan

RECOMMENDATION

That Council approve the attached resolution adopting the 2022-2023 Budget and Workplan.

BACKGROUND

At its meeting of June 14, 2022, Council reviewed and conducted a public hearing on the 2022-2023 proposed Budget presented by staff.

DISCUSSION

Staff mentioned during the presentation on June 14th, there would be a minor adjustment necessary to the Fire Department contracted services line, as the Department was in negotiations with the Labor union. The adjustment of $28,612 has been included in the budget for approval.

Staff also adjusted the Insurance fund as its Bay Cities Joint Power Insurance Authority budget was presented after the staff report for the June 14th meeting was finalized.

FISCAL YEAR 2022-23

Town of San Anselmo Proposed 2022-2023

BUDGET & WORK PLAN

TOWN OF
SAN ANSELMO
EST. 1907

ITEM 1.1 - ATTACHMENT 1

TABLE OF CONTENTS

Town Manager's Message **3**

Overview of Funds **11**

General Fund **13**

Overview Of Revenues & Expenditures 14
General Fund Revenue 14
Town Council 27
Administration & Finance 29
Legal Services 33
Library 35
Planning 39
Public Safety – Fire Protection Services 43
Public Safety – Police 47
Public Works – Engineering & Inspection 51
Public Works – Street & Park Maintenance 55
Recreation 59
Debt Service 61
Non-Departmental Services 63

Measure D Sales Tax Fund **67**

Emergency Reserve Fund **71**

Downtown Revitalization Fund **75**

Grants Fund **79**

Recreation Fund **83**

TABLE OF CONTENTS

Special Revenue Funds **91**
Community Services Master Plan Fund 93
Road Maintenance Fund 97
State Gasoline Tax Fund 101
Library Tax Fund 105
Robson House Fund 109
Special Events Fund 113
Measure A Parks Tax Fund 117
Isabel Cook Center (ICC) Fund 121
Measure C Wildfire Tax Fund 125
Climate Action Fund 129
Creekside Common Fund 133

Capital Projects Funds **137**
Capital Reconstruction Fund 137
Equipment Replacement Fund 141

Debt Service Funds **145**
Measure G Debt Service 145
Municipal Lease Fund 151

Internal Service Funds **155**
Insurance Fund 157
Building Maintenance Fund 161
Technologies Replacement Fund 165
Vehicle Replacement Fund 169

Appendix **173**
Appendix A – Capital Projects Budget Summary 173
Appendix B – Salary Schedule 175
Appendix C – Employee Salaries And Benefits Summary 176

TOWN MANAGER'S MESSAGE

Alexis Fineman
Mayor

Steve Burdo
Vice Mayor

Eileen Burke
Councilmember

Brian Colbert
Councilmember

Ford Greene
Councilmember

TOWN OF
SAN ANSELMO
EST. 1907

525 San Anselmo Avenue, San Anselmo, CA 94960-2682
www.townofsananselmo.org
(415) 258-4600 | Fax (415) 454-4683

June 14, 2022

Honorable Mayor Fineman, Town Council and San Anselmo Residents,

I am pleased to present the Town's Fiscal Year 2022-2023 Proposed Annual Budget and Work Plan the annual financial roadmap for the Town of San Anselmo. This extensive, detailed, and balanced budget continues the Town Council's priorities to protect General Fund reserves while restoring normal operational services in the wake of the COVID-19 pandemic and provides a Capital Improvement Program (CIP) of one-time expenses towards improving City assets and infrastructure.

The annual budget and work plan allocates resources to a variety of Town priorities and programs to ensure the community's physical security, enhance the community's quality of life, and maintain and develop the Town's facilities and infrastructure. This particular budget attempts to hold onto years of effort in doing so, despite the ongoing effects of the public health emergency which threatens revenue stability and, at the same time, requires a nimble response to demands for services.

This document represents our continued commitment to prudent fiscal management, to effective service delivery and to supporting an affordable quality of life for our citizens. Once adopted by the Council, the budget establishes the direction for all Town programs and services for the coming year. It represents the consensus of Council direction and staff recommendations on how to best accomplish Council goals and respond to the highest priorities of community needs.

TOWN ORGANIZATIONAL STRUCTURE

Town Council is the legislative body which represents the public; receives input, develops and adopts policy, and resolves public issues; formulates Town policy through motions, resolutions and ordinances which reflect the needs of the public.

Town staff, led by the Town Manager and the Department Heads, carries out the day-to-day work of the organization. These departments include Administration and Finance, Fire, Library, Planning, Police, Public Works, and Recreation.

TOWN MANAGER'S MESSAGE

SAN ANSELMO RESIDENTS

MAYOR
Alexis Fineman

VICE MAYOR
Steve Burdo

COUNCIL MEMBER
Brian Colbert

COUNCIL MEMBER
Eileen Burke

COUNCIL MEMBER
Ford Greene

TOWN TREASURER
John Mahl

TOWN CLERK
Vacant

TOWN MANAGER
David P. Donery

TOWN ATTORNEY
Megan H. Acevedo

LIBRARY
Linda Kenton
Director & Assistant Town Manager

FINANCE & ADMINISTRATIVE SERVICES
Jeff Zuba
Director

PUBLIC WORKS & BUILDING
Sean Condry
Director

FIRE DEPARTMENT
Jason Weber
Fire Chief

POLICE DEPARTMENT
Michael Norton
Chief of Police

PLANNING DEPARTMENT
Heidi Scoble
Director

RECREATION & SPECIAL EVENTS
Dannielle Mauk
Director of Community Services

ITEM 1.1 - ATTACHMENT 1

TOWN MANAGER'S MESSAGE

TOWN OF SAN ANSELMO
ELECTED AND AUTHORIZED PERSONNEL SUMMARIES
FISCAL YEAR 2022-2023

DEPARTMENT	2018-2019 BUDGET	2019-2020 BUDGET	2020-2021 BUDGET	2021-2022 BUDGET	2022-2023 BUDGET
GENERAL FUND					
Town Council*	n/a	n/a	n/a	n/a	n/a
Town Treasurer*	n/a	n/a	n/a	n/a	n/a
Administration and Finance	5.00	5.00	5.00	5.80	4.80
Legal Services*	n/a	n/a	n/a	n/a	n/a
Library	3.80	3.80	2.80	3.80	3.80
Planning	2.00	2.00	2.00	2.00	2.00
Fire Protection Services**	n/a	n/a	n/a	n/a	n/a
Police**	n/a	n/a	n/a	n/a	n/a
Public Works					
Engineering & Inspection	7.30	6.60	6.25	6.25	6.25
Street & Park Maintenance	6.00	6.00	6.00	6.00	7.00
Recreation	1.80	1.80	1.60	1.80	1.80
TOTAL GENERAL FUND	25.90	25.20	23.65	25.65	25.65
MEASURE D SALES TAX FUND	-	-	0.70	1.05	1.05
RECREATION FUND	5.00	5.00	5.00	5.20	5.00
SPECIAL REVENUE FUNDS					
Road Maintenance Fund	1.50	1.50	1.50	1.50	1.50
Library Fund	1.73	1.73	1.73	2.20	2.20
Robson House Fund	0.10	0.10	0.10	0.10	0.10
Isabel Cook Center Fund	0.10	0.10	0.10	0.10	0.10
TOTAL SPECIAL REVENUE FUNDS	3.43	3.43	3.43	3.90	3.90
TOTAL POSITIONS (ALL FUNDS)	34.33	33.63	32.78	35.80	35.60

* Town Council and Treasurer are elected part-time positions and receive fixed compensation
** Contracted services or JPA

TOWN MANAGER'S MESSAGE

FISCAL SUMMARY AND ECONOMIC OUTLOOK

With over 93% of Marin's eligible population having been fully vaccinated, the nation has recovered substantially from the Novel Coronavirus (COVID-19) pandemic. GDP growth is strong and unemployment low. However, there are formidable headwinds from high inflation, supply-chain disruptions, labor shortages, and impacts from the Russia-Ukraine war. Unlike many other industries, local government, including San Anselmo, is dealing with retention and recruitment issues and the escalation costs of labor. Although the Town is seeing a healthy pattern of revenue recovery in sales tax, business license tax, and recreation programs and rentals, projected costs in coming years will need to be addressed.

In fiscal year 2021-22, the Town achieved several important goals, including:

- Created two additional **Internal Service Funds - Technology Replacement Fund** and **Vehicle Replacement Fund** to allocate resources based on replacement schedule.
- Created a **Climate Action Fund** to track all the Climate Action efforts
- Implement new business license program
- Bring back suspended Library Assistant position for Library and Administrative Assistant position for Public Works department

Staff continues to work on the General Plan Housing, Safety and Circulation Elements, and at the time of the printing of this budget, is in final interviews to fill the Community Engagement Coordinator position.

In addition, staff:
The proposed fiscal year 2022-23 budget was developed based on the continuing objective of providing high quality services to our community in an effective, efficient, and financially responsible manner. The 2022-23 Work Plan Priorities information have been placed in each department's budget section, which will guide work during the fiscal year and beyond.

The fiscal year 2022-23 Proposed Budget reflects a balancing strategy that has prioritized essential services, continues to proactively fund long term obligations, and maintains investments in the Town's most critical infrastructure.

Roads, Infrastructure and Town Facilities

Since 2013, when Measure D was passed by residents increasing funding for infrastructure improvements, the annual work plan for road, drainage and other infrastructure repairs has been greatly enhanced. Additional transportation funding has become available due the passage of Senate Bill 1 (SB 1).

5-Year Capital Improvement Plan
In August of 2019, the Town Council approved a new 5-Year Capital Improvement Plan (CIP). This plan was reviewed the Capital Program Monitoring Committee and the Planning Commission before coming to the Town Council. Many of the priorities in the previous CIP are the same for the current Draft 5-Year CIP, however, due to the dynamic state of the budget, new funds becoming available (SB1), and the periodic need to refresh the CIP, staff has updated the plan to reflect the current funding conditions.

The funds in the CIP budget are for road maintenance, except for Measure D which also includes some general infrastructure improvements. These include the implementation of the school bike spine project, the installation of the HAWK pedestrian signal at SFD and Saunders, resurfacing Sir Francis Drake Boulevard from the Hub to Bolinas Avenue, and construction of the Brookside School Sidewalk Gap Closure project. Each of these projects are primarily funded through grants, with partial funding coming from the Road Maintenance Fund and Measure D.

Aging Town Facilities

The Town's community facilities are aging and many are in need of repair or replacement. These facilities include the Robson Harrington Park and House, the Isabel Cook Community Center, Fire Station #20, Creek Park and Memorial Park. Town Hall and Fire Station #19 have been restored in the recent past and are only in need of ongoing upkeep, and the Corporation Yard buildings are well-maintained, and the grounds are well utilized.

Flood Mitigation
The San Anselmo Flood Risk Reduction Project (SAFRR) is part of the District's 10-Year work plan to mitigate the 25-year flood event in the Ross Valley. The Project consists of three distinct components: (1) the Sunnyside Nursery Flood Diversion and Storage Basin at 3000 Sir Francis Drake Boulevard in Fairfax; (2) the removal of buildings at 632-634 San Anselmo Ave in San Anselmo (BB2), a structure that partially obstructs the flow of San Anselmo Creek and related creek restoration; and (3) flood mitigation measures on designated downstream private properties that may see a rise in water surface due to the removal of BB2 in San Anselmo.

During the spring of 2020, the Town worked with the Flood District to remove the buildings but not the abutments in the creek at 632-634 San Anselmo Ave. This provided an opportunity to create a temporary outdoor plaza for use by the community. This outdoor space has been well- received and has allowed for residents and visitors to safely enjoy the downtown during the pandemic. The timeline for the next steps in the SAFRR project have been delayed to 2022.

Pension Obligations

In 2006, the Town's miscellaneous bargaining unit, SEIU 1021, agreed to a two-tiered retirement plan for employees hired after February 1, 2007 and all new benefitted employees, including management and confidential, were affected. In 2013, the Public Employees' Pension Reform Act (PEPRA) was enacted, further reducing pension costs for newly hired employees. In 2015-16, well more than half of the Town's employees are enrolled in the two lower cost tiers.

TOWN MANAGER'S MESSAGE

In 2003, the Public Employees' Retirement System (PERS) combined agencies with less than 100 members into risk pools based on plan type. An Employer Side Fund was created to account for the difference between the funded status of the pool and the funded status of individual plans. The repayment of the Pension Obligation Bonds is reflected in the Expenditure Summary under General Fund Departments, Debt Service (Pension Obligation Bonds). Overall, the refinancing of the side fund is saving the Town approximately $60,000 per year.

Due to unintended consequences resulting from the PEPRA changes and existing PERS policies on risk pools, changes were necessary to ensure the proper funding of the pools. In order to address the problem, CalPERS combined twelve risk pools into two, one for Safety and one for Miscellaneous and employer contributions toward the unfunded liability for plans in a risk pool will be collected for an estimated 30 years as dollar amounts instead of contribution rates expressed as a percentage of payroll. In May 2014, the CalPERS Board adopted changes to the existing pooling structure policies and a new policy for allocating the pools' unfunded accrued liability, effective for the 2015-16 employer contribution rates.

In December 2016, the CalPERS Board of Administration acted to strengthen the fund by cutting the discount rate by a half percentage point over the next three years. CalPERS has already reduced the return rate from 7.5 percent to 7.375 percent and will further reduce the assumption to 7.25 percent for the July 2017, valuations and to 7.0 percent a year later.
CalPERS lowered the discount rate because they determined that achieving a 7.5 percent rate of return was now far less likely. The result of this lowered discount rate is that liabilities will grow, and that the Town will have to increase pension contributions. CalPERS uses an amortization and smoothing policy that spreads rate increases or decreases over a 20-year period and amortizes all experience gains and losses over a fixed 30-year period.

Most recently, on February 14, 2018, the CalPERS Board adopted changes to the amortization methods for gains and losses including reducing the amortization period from 30 years to 20 years, which directly impact employer contribution rates. The change will be reflected in June 2019 actuarial reports and take affect fiscal year 2021-22.

Based on the analysis conducted by Bartel & Associates in the spring of 2018, the Town's pension obligations are expected to double over the next ten years. The additional impacts on the economy as a result of COVID-19 on CalPERS pension investments will add further uncertainty to the Town's obligations.

TOWN MANAGER'S MESSAGE

At the January 12, 2021 meeting, Council approved the Town's participation to refinance its unfunded pension liability for the Town's Safety and Police Plan through the issuance of bonds by the Central Marin Police Authority. The combination of projected total interest savings over the current CalPERS amortization period of 25 years is $11.9 million, or approximately $534,000 per year. The Town would benefit from this savings as a member of the JPA.

After the January meeting, Town staff met with Wulff Hansen & Co., a financial advisor, to discuss potentially refinancing the Town's pension obligation debt with the California Public Employee Retirement System (CalPERS) for Town's miscellaneous plan. Wulff Hansen Co.'s analysis shows that the Town has an opportunity to achieve interest savings in the estimated amount of $3.4 million by issuing pension obligation bonds. At the Financial Advisory Committee meeting held on April 15, 2021, the Committee received the presentation given by Wulff, Hansen & Co. and voted unanimously to recommend that this action be brought to the full Town Council for consideration.

At the April 27, 2021 meeting, Staff brought the item forward for Council's consideration. Town Council voted unanimously to authorize staff to proceed with the project. The Town certainly has taken one step in the right direction in terms of dealing with CalPERS pension cost challenges.

Grants

The proposed budget reflects a number of grants, some new and some awarded in earlier years. Grants are accounted for in the Grant Fund and the majority require no matching funds on the part of the Town. Actual budgeted expenditures for FY 2022-23 are, in many cases, less than the total amount of the grant as the projects are multi year. Details and figures for these grants are available in the Grant Fund pages of the budget document.

Budget Format

The operations of the Town are budgeted primarily in the Town's General Fund. Significant maintenance projects and other capital improvements are contained in the Capital Reconstruction Fund. Road and drainage improvement projects are funded through the Road Maintenance Fund and grants in the Grants Fund. The Recreation Fund accounts for most of the revenue and expenditures related to recreation programs. The Library Tax Fund tracks expenditures related to the special Library services tax. The Measure D Sales Tax Fund tracks activity related to capital projects funded through the use of those fund. A list of all the Town funds, a description of their functions, and a summary of revenue and expenses are contained in the Overview of Funds section at the beginning of the budget document.

TOWN MANAGER'S MESSAGE

Conclusion

The proposed FY 2022-23 budget represents a prudent budget that addresses the Town's pressing capital and equipment needs, while maintaining a staffing structure that strives to meet the needs of its citizens. The Town's staff remains committed to providing excellent community services to the residents of San Anselmo.

Acknowledgements

The development of the Town's annual budget and work plan, especially in these uncertain times, requires teamwork, foresight, experience, and leadership. From top to bottom, the leadership and dedication from within each Town department is reflected within this document.

The Town has experienced some turnover in key positions within it leadership team. Notably, as of September of 2021, the Town appointed a new Finance and Administrative Services Director, Jeff Zuba. Jeff brings to the Town a strong background in managing local government finances and came in, completed the Town's annual financial audit and has put his own stamp of excellence on the operations of the Finance and Administrative Services Department from day one. The Town's team, led by Jeff, submit a proposed budget following the Town's strict standards, which reflect a careful balancing of accountability and progress with the overarching policy of 'living within our means'.

Respectfully submitted,

David P. Donery
Town Manager

OVERVIEW OF FUNDS

OVERVIEW OF FUNDS
CHANGES IN FUND BALANCE
2022-2023

DESCRIPTION	Estimated Fund Balance June 30, 2022	Revenue	Transfers In	Total Resources Available	Expenditures	Transfers Out	Estimated Fund Bal & Res June 30, 2023
General Fund	6,650,794	19,271,898	384,447	26,307,139	18,842,829	813,517	6,650,793
Special Revenue Fund							
Community Services Master Pl	4,851	-	-	4,851	4,000	-	851
Road Maintenance Fund	182,714	505,000	730,987	1,418,701	1,214,864	-	480,418
State Gasoline Tax	-	638,946	-	638,946	-	638,946	-
Measure D Sales Tax Fund	845,731	1,210,000	-	2,055,731	1,284,720	-	771,011
Emergency Reserve Fund	1,545,125	1,492,262	-	3,037,387	850,000	-	2,187,387
Downtown Revitalization Fund	8,447	-	-	15,876	3,678	-	12,198
Grant Fund	(25,526)	717,744	-	692,218	717,744	-	(25,526)
Recreation Fund	767,698	1,877,632	-	2,645,330	1,851,144	26,488	767,698
Library Tax Fund	59,656	297,222	-	449,829	346,825	-	103,004
Robson House	81,018	26,220	-	107,238	57,263	-	49,975
Special Events	5,713	22,000	-	27,713	44,040	-	(16,327)
Measure A Parks Tax Fund	570,404	226,168	-	796,572	796,572	-	-
Isabel Cook Center	37,499	107,688	-	145,187	112,196	-	32,991
Measure C Wildfire Tax Fund	250,603	365,000	-	628,514	365,000	-	263,514
Climate Action Fund	10,000	-	105,000	115,000	80,000	-	35,000
Creekside Commons Fund	136,433	-	-	136,433	136,433	-	-
Capital Project Funds							
Capital Reconstruction	65,650	-	-	65,650	50,000	-	15,650
Equipment Replacement	120,193	-	-	120,193	75,000	-	45,193
Debt Service Fund							
Measure G Debt Service	2,014,947	567,158	-	2,682,105	689,756	-	1,992,349
Municipal Lease Fund	-	-	158,517	158,517	158,517	-	-
Internal Service Fund				-			-
Insurance Fund	220,683	600,000	-	820,683	720,946	-	99,737
Building Maintenance Fund	100,000	344,784	-	444,784	300,000	-	144,784
Technologies Replacement	140,000	281,700	-	421,700	400,000	-	21,700
Vehicle Replacement Fund	95,000	-	100,000	195,000	75,000	-	120,000
TOTAL	13,987,633	28,551,422	1,478,951	44,018,066	29,186,527	1,478,951	13,352,528

TOWN OF

SAN ANSELMO

EST. 1907

ITEM 1.1 - ATTACHMENT 1

GENERAL FUND

Overview of Revenue & Expenditures 14

General Fund Summary 23

Town Council 27

Administration & Finance 29

Legal Services 33

Library 35

Planning 39

Public Safety

- Fire Protection Services 43
- Police 47

Public Works

- Engineering & Inspection 51
- Street & Park Maintenance 55

Recreation 59

Debt Service 61

Non-Departmental Services 63

OVERVIEW OF REVENUES & EXPENDITURES

Understanding municipal finance takes a lot of effort and willingness to read and interpret a large volume and wide variety of information. The Town strives to make all communications, including financial information, as approachable and understandable as possible.

In this section, we are presenting information about how the Town receives its funding and how it gets spent. We are also presenting it in a new format that has been developed to layout the basic structures of the income and outflow of tax dollars and other funds the Town receives and spends.

The Town of San Anselmo receives funding to operate through a variety of sources. Many are well-known, such as property tax and sales tax. These two sources make up the majority of Town funding. As you will see in this budget document, the Town's operations are accounted for in the General Fund.

GENERAL FUND REVENUE

PROPERTY AND OTHER TAXES

- **Property Tax:** Property tax is the primary source of revenue for the Town of San Anselmo. The basic property tax is 1 percent of assessed valuation, of which the Town receives less than one quarter. In 2022-2023, the assessed valuation of San Anselmo properties is expected to increase more than 4.0%, an indication that property sales are continuing to pick up and remain strong.
- **Secured:** The Town's share of 1 percent on the Town's assessed valuation is billed by the County of Marin. A property assessment may not exceed a 2 percent increase in any year unless the property has been sold or improvements have been constructed.
- **Unitary:** State collected and distributed tax on utility-owned properties. In Marin County, PG&E property accounts for approximately 25% of unitary tax collections.
- **Unsecured:** Tax on property such as business office equipment and possessory interest tax.
- **Supplemental:** Taxes assessed on property sales and new construction outside the regular tax bills.
- **Homeowners Exemption (HOPTR):** Reimbursement for the property tax lost on the $7,000 homeowners' property tax exemption.
- **Pension Override Tax:** The Town's pension tax is used to pay for the cost of the employee pension program. The rate is $0.059 per $100 of a property's assessed value.
- **Municipal Service Tax:** The Town's Municipal Services Tax is used to pay for general Town services. It is assessed annually at $78 per residential living unit or 5.2 cents per square foot for commercial space.
- **ERAF Property Tax:** Beginning in the 1992-93 fiscal year, the State of California diverted property taxes from local governments to boost revenues to the State. The fund to which these local revenues are being diverted is called "ERAF," Educational Revenue Augmentation Funds. In Marin County, the ERAF formula allows the local governments to keep a portion of the diverted property taxes, or ERAF taxes.

OVERVIEW OF REVENUES & EXPENDITURES

- **Property Tax in Lieu of Motor Vehicle License Fees:** The vehicle license fee (VLF), also called the motor vehicle in-lieu tax, is a tax on the ownership of a registered vehicle in place of taxing vehicles as personal property

OTHER TAXES

- **Sales Tax:** The Town receives 1 percent of the 8.75 percent in sales tax on retail sales transactions taking place in the Town. San Anselmo has relatively low sales tax revenue compared to its neighboring cities due to its physical location away from the freeway.
- **Property Transfer:** The Town and County of Marin each receive $.55 per $1,000 of the sales price of property sold in San Anselmo.

FRANCHISES

- **Garbage:** The Town receives 11% of the revenues of the garbage service.
- **Cable TV:** The Town receives 5% of the revenues received by the cable companies, Comcast and AT&T, from San Anselmo subscribers. Legislation has held that high speed internet access fees collected by the cable company are not subject to the franchise fee.
- **Electricity & Gas:** The Town receives 0.5 % of electrical service revenue and 1% of the gas service revenue in San Anselmo.

PERMITS AND LICENSES

- **Business License Tax:** Each business activity in San Anselmo is required to have a business license. Most license fees are based on the gross receipts of the business. The minimum license fee for most businesses is $15. A business license administrative fee is no longer being charged.
- **Meter Parking Fees:** Revenue collected in the parking meters that are located in the Town's parking lots.
- **Merchant Parking:** Business owners and employees may purchase permits to park all day in four-hour parking zones. The revenue is held in reserve in the designated portion of the ending balance for downtown parking-related projects.
- **Construction:** Building, electrical, plumbing, heat/air/mechanical permits, and plan check fees. Revenues have steadily increased over the past few years due to strong building activity and turnover in real estate.

FINES

- **Vehicle Code:** The Town, County, and State each receive a share of the fines collected for vehicle code citations issued in San Anselmo. The State and County are the first to collect their share on the fines imposed by the courts.
- **Parking:** The Town's share of fines collected on parking citations issued in San Anselmo.

OVERVIEW OF REVENUES & EXPENDITURES

USE OF MONEY & PROPERTY

- **Interest:** The Town invests its idle funds with the Local Agency Investment Fund (LAIF) managed by the State Treasurer. The General Fund receives interest on all funds, with the exception of interest that accrues to the Measure G Debt Service Funds, Measure A Parks Tax Fund and Measure G Projects Fund; those funds accrue their own interest.

STATE REVENUE

- **Proposition 172 Sales Tax:** Allocation of 0.5 percent of sales tax approved by California voters to fund public safety costs.
- **Abandoned Vehicle Program:** Cities and towns are eligible to receive reimbursement for their costs in enforcing State abandoned vehicle laws. This revenue is turned over to Central Marin Police Authority.
- **Motor Vehicle License Fee:** The California Department of Motor Vehicles collects a property tax on the depreciated value of motor vehicles, and the State distributes the funds to local governments on a per capita basis.
- **State Mandated Reimbursement:** Legislation known as SB 90 previously required the State to reimburse local governments for the cost of implementing state mandates, such as domestic violence calls and Open Meeting Act laws. No reimbursement is expected this year from the State.

FEES FOR SERVICE

- **General Plan Maintenance Fee:** Fees collected from Planning applicants for General Plan maintenance.
- **Resale Inspections:** Town code requires an inspection by the Building Inspector at the time a residential property is sold, to identify health and safety hazards needing correction.
- **Planning Fees:** Cost recovery for labor to process planning permit applications, such as variances, use permits, design review, and subdivisions.

MISCELLANEOUS

- **Donations:** Donations from community groups or residents.
- **Other:** Miscellaneous Town revenues, such as copy machine revenue, reimbursement of water costs by the Robson Community Garden, donations by Friends of the Library, etc.

TRANSFERS IN

- **From State Gasoline Tax Fund:** Municipalities receive a share of State gas tax revenues, distributed on a per capita basis, for costs associated with street maintenance. This revenue is received into the Gas Tax Fund, a special revenue fund. Transfers are made to the General Fund to support street maintenance activities as appropriate.
- **From Recreation Fund:** Recreation Fund transfers its share of annual unfunded pension liability payment to General Fund.

OVERVIEW OF REVENUES & EXPENDITURES

To demonstrate the General Fund funding levels for FY 2022–23, please refer the chart below:

GENERAL FUND REVENUE SUMMARY $19,656,345

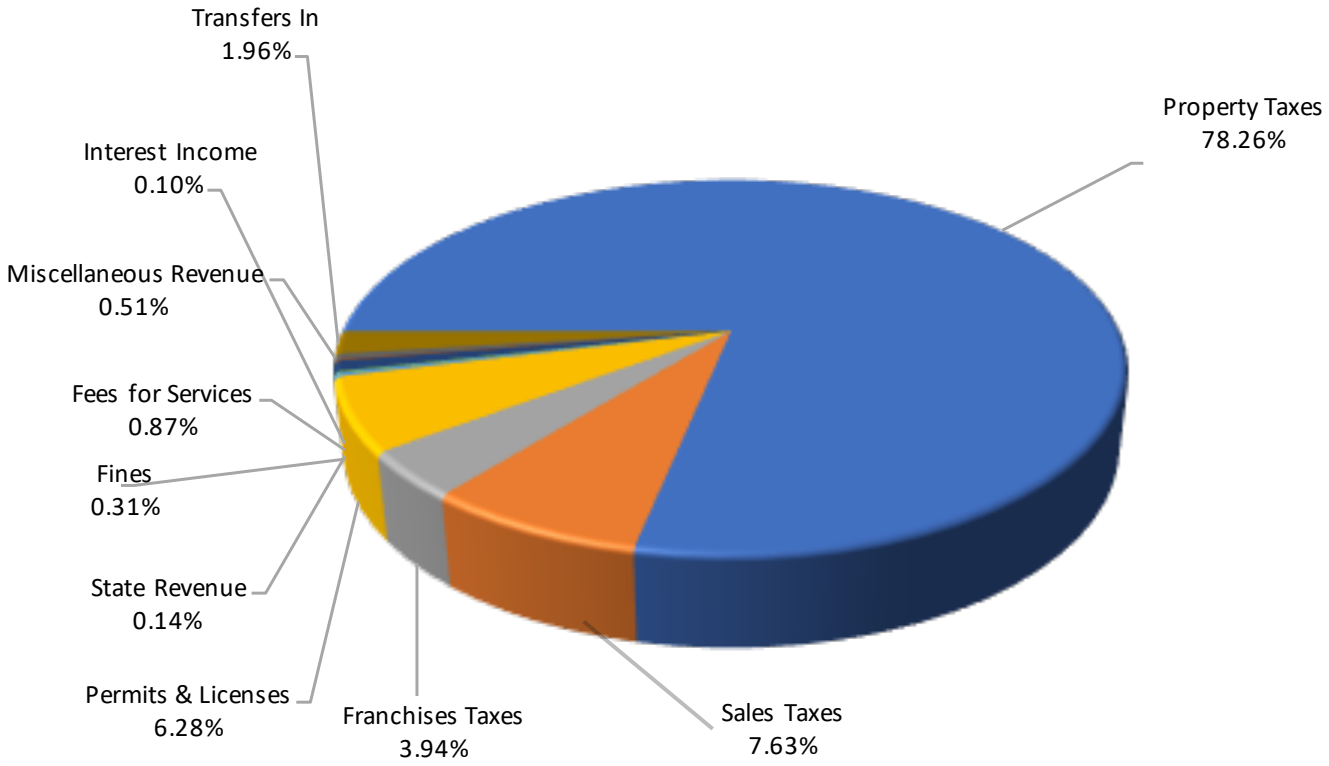

TOTAL GENERAL FUND REVENUE SUMMARY

Property Taxes	15,383,828	78.26%
Sales Taxes	1,500,000	7.63%
Franchises Taxes	775,000	3.94%
Permits & Licenses	1,234,500	6.46%
Fines	60,000	0.31%
State Revenue	27,500	0.14%
Fees for Services	171,000	0.87%
Interest Income	20,000	0.10%
Miscellaneous Revenue	100,070	0.51%
Transfers In	384,447	1.96%
Total	**19,656,345**	**100.00%**

OVERVIEW OF REVENUES & EXPENDITURES

Two of the most well-known taxes are property taxes and sales taxes (or sales and use taxes)

PROPERTY TAX ALLOCATION

Property taxes in San Anselmo provide over 78% of the Town's operating revenue for FY2022-23. Of each dollar of property tax spent by our residents, the Town receives approximately $0.26. The chart below shows a breakdown of how your property taxes are used:

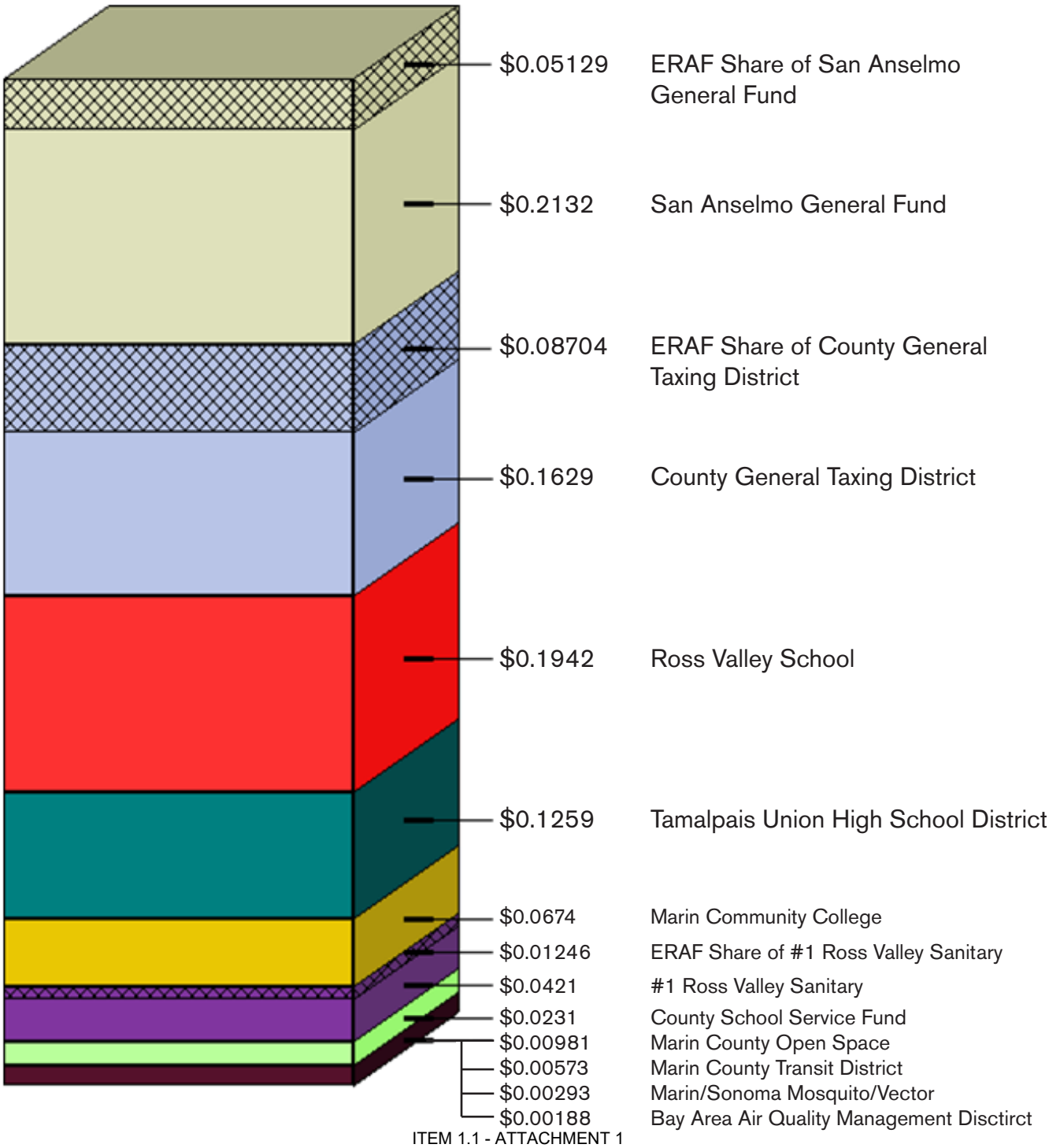

ITEM 1.1 - ATTACHMENT 1

SALES AND USE TAX ALLOCATION

Sales tax in the Town of San Anselmo is currently assessed at 8.75%. Of this amount, the Town receives 1% as per State Law, and an additional 0.5% from Measure D which is allocated towards road and infrastructure repairs and upgrades. The chart below shows a breakdown of how your local sales taxes are used:

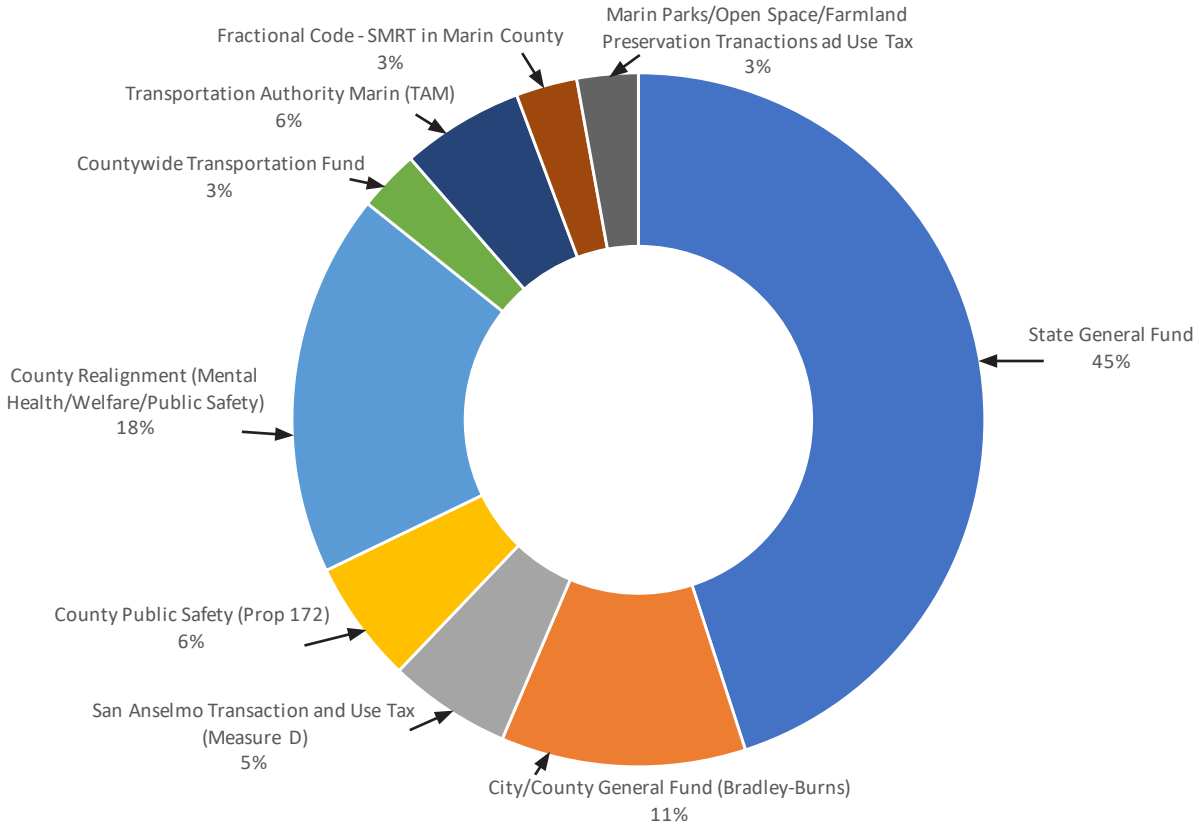

SALES AND USE TAXES ALLOCATION

State General Fund	3.9375
City/County General Fund (Bradley-Burns)	1.0000
San Anselmo Transaction and Use Tax (Measure D)	0.5000
County Public Safety (Prop 172)	0.5000
County Realignment (Mental Health/Welfare/Public Safety)	1.5625
Countywide Transportation Fund	0.2500
Transportation Authority Marin (TAM)	0.5000
Fractional Code - SMRT in Marin County	0.2500
Marin Parks/Open Space/Farmland Preservation Tranactions ad Use Tax	0.2500
Total	**8.7500 %**

GENERAL FUND EXPENDITURES

LABOR COSTS

- **Salaries:** Salaries and salary-related costs are the largest single expenditure for the Town, approximately 78% of the Town's expenditures, including Fire and Police Department contract cost.
- **Final Salary/Leave Buyout:** Employees may opt to cash out one week of vacation per year. Upon separation from the Town, an employee's accrued vacation time payout costs and any other moneys due are paid from this category.
- **Health Benefits:** The Town currently has a cafeteria benefits plan that pays the equivalent of family Kaiser, dental, vision, a small life insurance policy for each employee and long-term disability premium currently in the amount of approximately $2,523 per month. Any unused portion of the 2022-23 cafeteria benefits plan is given to employees as "cashback" up to a cap of $365 per month. The cashback program offers flexibility to employees in their choices for health coverage. Employees hired after July 1, 2014 have their medical benefit limited to a maximum of $1,950 per month with no cashback option.
- **Retirement:** The Town is a member of the Public Employees Retirement System (PERS). The various plans are described in terms of a percentage of annual salary at a certain retirement age. For example, the 2% @ 55 plan allows an employee to retire at age 55 with 2% of his/her annual salary for each year of service. The Town had one retirement plan for Miscellaneous employees (2.7%@55) until February 2007, when a second-tier retirement plan (2%@55) was enacted in order to reduce retirement costs. The current configuration of retirement plans and their rates (expressed as a percentage of payroll) is:

Group	Tier 1	2022-23 Rate	2021-22 Rate	Tier 2 (eff. 2/07)	2022-23 Rate	2021-22 Rate	PEPRA
Miscellaneous	2.7%@55	14.03%	14.20%	2%@55	10.87%	10.88%	7.47%

Currently, part of the pension rate is expressed as a percentage of monthly salary. Employees pay the employee share, which is 8% for Miscellaneous in Tier 1 and 7% for Tier 2.

In 2012-13 the Town's PERS rate was reduced to reflect the sale of Pension Obligation Bonds to pay the Town's Employer Side Fund liability of $3,521,184. In 2003, CalPERS combined agencies with less than 100 members into risk pools based on plan type. The Employer Side Fund was created to account for the difference between the funded status of the pool and the funded status of individual plans. The repayment of the Pension Obligation Bonds is reflected in the Expenditure Summary under General Fund Departments, Debt Service (Pension Obligation Bonds). Overall, the refinancing of the side fund is saving the Town approximately $60,000 per year.

In January 2013 the State Public Employees' Pension Reform Act (PEPRA) went into effect. Any person who becomes a new member of the retirement system on or after January 1, 2013 may only be offered the new pension benefit plan specified in the Reform Act. All non-safety new hires are subject to a formula providing 2% of compensation for each year of service for an individual retiring at age 62, increasing to 2.5% for an individual retiring at age 67. PEPRA employees must pay 50% of the cost of the pension, currently 6.75%.

OVERVIEW OF REVENUES & EXPENDITURES

In May 2014, the CalPERS Board adopted changes to the existing pooling structure policies and a new policy for allocating the pools' unfunded accrued liability, effective for the 2015-16 employer contribution rates. Due to unintended consequences resulting from the PEPRA changes and existing PERS policies on risk pools, changes were necessary to ensure the proper funding of the pools. In order to address the problem, CalPERS combined twelve risk pools into two, one for Safety and one for Miscellaneous. Employer contributions toward the unfunded liability for plans in a risk pool are collected as dollar amounts instead of contribution rates expressed as a percentage of payroll for an estimated 30 years.

In September 2021, the Town issued Pension Obligation Bonds to pay the Town's Employer side unfunded liability of $9,070,378. Due to the favorable interest rate environment at the time of issuance the projected savings over the life of the bond is estimated to be $5,351,965. The savings between the CALPERS amortization schedule and bond repayment schedule will be paid to the Pension Trust each year to alleviate any future unfunded liability concerns. For the Town, year 1 savings estimated to be paid to the Pension Trust is $246,000.

With the consolidation of Police services into the Central Marin Police Authority and Fire services into the Ross Valley Fire Department, the Safety pension costs are included in their respective budgets.

- **Payroll Taxes:** The Town participates in Social Security at a rate of 6.2% of total salary up to a limit of $147,000 in 2022 and in Medicare at a rate of 1.45% of total salary without limit.
- **Overtime/Temporary:** Costs associated with overtime pay and temporary help.

SERVICES AND SUPPLIES

- **Legal Advertising:** Legally required advertising for noticing of public meetings, bidding, ordinances and General Plan amendments.
- **Vehicle Operations:** Preventive and repair maintenance for the Town fleet of cars, trucks and motorcycles.
- **Equipment Maintenance:** Town equipment, including office equipment, copy machines, postage machine, fax, mowers.
- **Publications & Dues:** Professional and technical publications and membership dues in professional organizations.
- **Outside Services:** Outside audits, technical consulting assistance, Joint Powers Agreements for county wide services and parking meter collection.
- **Training:** Workshops, seminars and conference to keep staff current.
- **Internal Service Charge – Building Maintenance:** Janitorial, heating and air conditioning and minor repairs. Telephone, gas, electricity, water, sewer, and heat/air.
- **Internal Service Charge – Info Tech:** Technology support for departments.
- **Supplies:** Postage, copy paper, and miscellaneous supplies; costs associated with employee costs that are reimbursable, such as mileage allowance, uniforms, boots, and protective clothing tools; supplies and services related to the technical functions of each department.

OVERVIEW OF REVENUES AND EXPENDITURES

GENERAL FUND EXPENDITURE SUMMARY $19,656,348

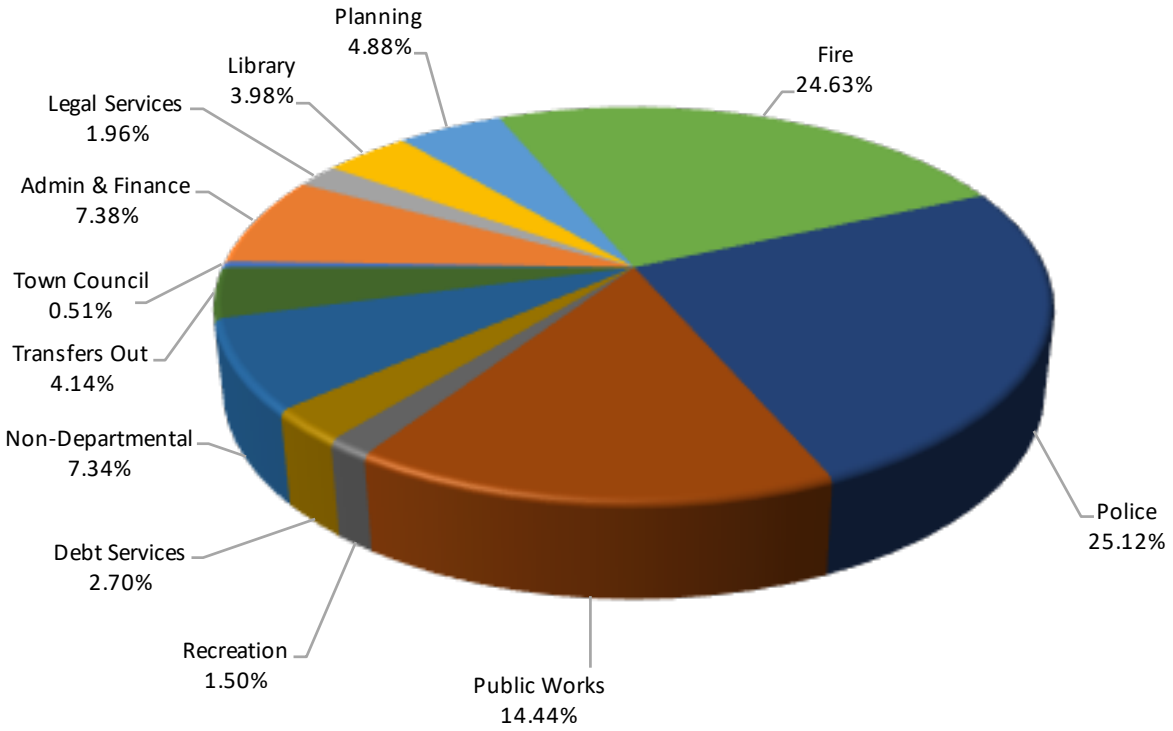

TOTAL GENERAL FUND EXPENDITURE SUMMARY

Town Council	101,030	0.51%
Admin & Finance	1,450,835	7.38%
Legal Services	385,000	1.96%
Library	781,633	3.98%
Planning	958,759	4.88%
Fire	4,841,339	24.63%
Police	4,938,129	25.12%
Public Works	3,118,389	15.87%
Recreation	294,405	1.50%
Debt Services	530,476	2.70%
Non-Departmental	1,442,836	7.34%
Transfers Out	813,517	4.14%
Total	**19,656,348**	**100.00%**

GENERAL FUND SUMMARY

TOWN OF SAN ANSELMO
GENERAL FUND
FISCAL YEAR 2022-2023

	2020-2021	2021-2022		2022-2023	
	Actual	Rev Budget	Est. Actual	Budget	%Total
BEGINNING BALANCE	4,437,465	6,264,830	6,264,830	6,650,794	
REVENUE					
Property Taxes	14,214,800	14,053,988	14,746,279	15,383,828	78.3%
Franchise Taxes	807,419	750,630	801,664	775,000	3.9%
Sales Taxes	1,358,110	1,400,000	1,570,000	1,500,000	7.6%
Licenses, Permits, Fees, Fines	1,371,908	1,327,000	1,305,090	1,294,500	6.6%
Use of Money & Property	76,487	15,000	15,000	20,000	0.1%
Other Agency Revenue	31,858	27,500	22,500	27,500	0.1%
Fees for Services, Misc	299,971	268,500	256,884	271,070	1.4%
SUB TOTAL	18,160,553	17,842,618	18,717,417	19,271,898	98.0%
TRANSFERS IN	420,969	418,464	441,239	384,447	2.0%
TOTAL REVENUE AND TRANSFERS IN	18,581,522	18,261,082	19,158,656	19,656,345	100.0%
TOTAL RESOURCES	23,018,987	24,525,912	25,423,486	26,307,139	
EXPENDITURES					
Salaries	2,241,661	2,853,215	2,516,463	3,063,145	15.6%
Retirement	919,515	1,105,254	1,023,168	692,141	3.5%
Other Benefits	559,169	816,875	748,081	893,105	4.5%
Office & Dept Sup, Lib Mat	164,002	151,773	181,500	153,594	0.8%
Training, Publications, Dues	20,027	55,750	46,025	59,046	0.3%
Outside Serv: Other	1,856,442	1,992,936	2,259,206	3,086,264	15.7%
Outside Serv: Ross Valley Fire Dept	4,382,002	4,611,448	4,555,339	4,841,339	24.6%
Outside Serv: Central Marin Police	4,546,889	4,685,857	4,705,257	4,938,129	25.1%
Utilities	89,852	90,300	96,850	183,000	0.9%
Bldg, Veh, Equip Maint	398,180	367,490	589,078	399,091	2.0%
Debt Service Principal	211,000	227,000	227,000	285,000	1.4%
Debt Service Interest	16,902	11,208	11,208	248,976	1.3%
SUB TOTAL	15,405,640	16,969,106	16,959,175	18,842,829	95.9%
TRANSFERS OUT	1,348,517	1,263,517	1,813,517	813,517	4.1%
TOTAL EXPENDITURES & TRANSFERS OUT	16,754,157	18,232,623	18,772,692	19,656,346	100.0%
Net Increase/(Decrease)	1,827,365	28,459	385,964	(0)	-
ENDING BALANCE	6,264,830	6,293,289	6,650,794	6,650,793	
Committed	1,139,794	626,329	1,190,422	1,190,422	6.1%
Unassigned	5,125,036	5,666,960	5,460,372	5,460,371	27.8%
TOTAL BUDGET	23,018,987	24,525,912	25,423,486	26,307,139	

GENERAL FUND SUMMARY

GENERAL FUND REVENUE SUMMARY					
	2020-2021 Actuals	2021-2022 Revised Budget	2021-2022 Estimated Actuals	2022-2023 Budget	% of Total Budget
PROPERTY TAXES					
Secured	7,736,201	8,061,810	8,182,381	8,677,849	44.15%
Unitary	52,184	45,000	62,917	50,000	0.25%
Unsecured	147,124	147,124	149,702	159,994	0.81%
Supplemental	159,948	90,000	125,000	110,000	0.56%
HOPTR	33,268	32,958	33,000	32,891	0.17%
Pension Override	2,490,633	2,291,980	2,554,331	2,592,646	13.19%
Muni Services	449,214	455,492	439,381	454,462	2.31%
ERAF (County)	1,387,119	1,214,436	1,426,858	1,469,664	7.48%
Prop Tax in Lieu of MVLF	1,540,203	1,595,188	1,612,709	1,716,323	8.73%
Property Transfer Tax	218,906	120,000	160,000	120,000	0.61%
PROPERTY TAXES	14,214,800	14,053,988	14,746,279	15,383,828	78.26%
SALES TAXES					
Sales Tax - State 1%	1,237,813	1,320,000	1,450,000	1,400,000	7.12%
Prop 172 Sales Tax	120,297	80,000	120,000	100,000	0.51%
SALES TAXES	1,358,110	1,400,000	1,570,000	1,500,000	7.63%
FRANCHISE TAXES					
Garbage Franchise	484,552	445,630	470,000	465,000	2.37%
Cable Franchise	207,024	190,000	209,486	195,000	0.99%
PG & E Franchise	115,843	115,000	122,178	115,000	0.59%
FRANCHISE TAXES	807,419	750,630	801,664	775,000	3.94%
PERMITS AND LICENSES					
Business License Tax	292,106	240,000	272,267	260,000	1.32%
Meter Parking	8,774	20,000	20,000	20,000	0.10%
Merchant Parking	2,490	4,500	1,915	4,500	0.02%
Construction Permits	1,006,975	980,000	930,000	950,000	4.83%
PERMITS AND LICENSES	1,310,345	1,244,500	1,224,182	1,234,500	6.29%

GENERAL FUND SUMMARY

FINES					
Vehicle Code	18,043	17,500	20,000	10,000	0.05%
Library	1,205	-	908	-	0.00%
Parking	42,315	65,000	60,000	50,000	0.25%
FINES	61,563	82,500	80,908	60,000	0.31%
USE OF MONEY AND PROPERTY					
Interest	76,487	15,000	15,000	20,000	0.10%
USE OF MONEY AND PROPERTY	76,487	15,000	15,000	20,000	0.10%
STATE REVENUE					
State Library AID	6,197	-	-	-	0.00%
State Mandated Reimb.	16,305	-	-	-	0.00%
Other State Revenue	9,356	27,500	22,500	27,500	0.14%
STATE REVENUE	31,858	27,500	22,500	27,500	0.14%
FEES FOR SERVICES					
General Plan Maint. Fee	8,832	6,000	8,387	6,000	0.03%
Resale Inspections	75,916	50,000	55,000	50,000	0.25%
Planning Fees	82,973	100,000	85,000	100,000	0.51%
Other Fees	54,034	15,000	21,000	15,000	0.08%
FEES FOR SERVICES	221,755	171,000	169,387	171,000	0.87%
MISCELLANEOUS REVENUE					
Friends of Library Donation	-	-	-	-	0.00%
Library Fundraising	50	-	50	-	0.00%
Ross Valley Fire Dept.	84,900	87,500	87,447	90,070	0.46%
Other Misc Revenue	(6,734)	10,000	-	10,000	0.05%
MISCELLANEOUS REVENUE	78,216	97,500	87,497	100,070	0.51%
GENERAL FUND OPERATING REVENUE	18,160,553	17,842,618	18,717,417	19,271,898	98.04%
TRANSFERS IN					
Transfers In	420,969	418,464	441,239	384,447	1.96%
TRANSFERS IN	420,969	418,464	441,239	384,447	1.96%
TOTAL REVENUE AND TRANSFERS IN	18,581,522	18,261,082	19,158,656	19,656,345	100.00%

GENERAL FUND
EXPENDITURE SUMMARY

	2020-2021 Actuals	2021-2022 Revised Budget	2021-2022 Estimated Actuals	2022-2023 Budget	% of Total Budget
GENERAL FUND DEPARTMENTS					
Town Council	36,906	95,323	71,023	101,030	0.51%
Administration and Finance	1,082,518	1,423,742	1,241,457	1,450,835	7.38%
Legal Services	315,276	300,000	366,500	385,000	1.96%
Library	561,380	729,256	638,036	781,633	3.98%
Planning	356,218	638,270	532,704	958,759	4.88%
Public Safety					
Fire	4,382,002	4,611,448	4,555,339	4,841,339	24.63%
Police	4,546,889	4,685,857	4,705,257	4,938,129	25.12%
Public Works					
Engineering	1,283,357	1,406,648	1,479,495	1,635,519	8.32%
Street and Park Maintenance	1,405,357	1,403,037	1,709,861	1,482,870	7.54%
Recreation	241,375	281,448	268,110	294,405	1.50%
Debt Service- Pension Obligation Bonds	226,418	234,708	234,708	530,476	2.70%
Non-Departmental	967,945	1,159,369	1,106,685	1,442,836	7.34%
TOTAL EXPENDITURES	15,405,640	16,969,106	16,959,175	18,842,829	95.86%
GENERAL FUND TRANSFERS					
to Building Maintenance Fund	-	-	200,000	-	0.00%
to Capital Reconstruction Fund	100,000	-	-	-	0.00%
to Climate Fund	-	55,000	55,000	105,000	0.53%
to Equipment Fund	215,000	-	-	-	0.00%
to Insurance Fund	450,000	450,000	650,000	-	0.00%
to Measure A Parks Tax Fund	-	-	-	-	0.00%
to Municipal Lease Fund	158,517	158,517	158,517	158,517	0.81%
to Road Maintenance Fund	425,000	400,000	400,000	450,000	2.29%
to Technology Replacement Fund	-	100,000	100,000	-	0.00%
to Vehicle Replacement Fund	-	100,000	100,000	100,000	0.51%
to Emergency Project Fund	-	-	200,000	-	
TRANSFERS OUT	1,348,517	1,263,517	1,813,517	813,517	4.14%
TOTAL EXPENDITURES AND TRANSFERS OUT	16,754,157	18,232,623	18,772,692	19,656,346	100.00%

ITEM 1.1 - ATTACHMENT 1

TOWN COUNCIL

The five-member Town Council is the legislative body of the Town. The elected representatives enact ordinances, determine policy, hear appeals, adopt the annual budget, fix salaries, appoint the Town Manager and the members of the Town's boards, commissions, and committees, and through the Town Manager, monitor the activities of Town staff. Regular meetings of the Council are held on the second and fourth Tuesdays of every month. Councilmembers also serve on regional and local boards and on Council ad-hoc committees.

LABOR

Compensation for each Councilmember is $300 per month.

SERVICES AND SUPPLIES

- **Training** – Attendance at meetings of the Marin County Council of Mayors and Councilmembers (MCCMC), the League of California Cities, and other meetings or conferences ($9,000).
- **Outside Services** – Election – Election costs ($65,000).
- **Internal Service Charge – Building maintenance** – Heat/air, and minor repairs ($2,000).
- **Internal Service Charge – Info Tech** – All utilities and internet connection ($2,500).
- **Department supplies** – Frames and certificates for Council commendations and ceremonies, and for Council meeting supplies ($2,500).

GENERAL FUND

GENERAL FUND
TOWN COUNCIL

	2020-2021	2021-2022	2021-2022	2022-2023	
	Actuals	Revised Budget	Estimated Actuals	Budget	% of Total Budget
Labor Costs					
Salaries	18,300	18,600	19,250	18,600	18.41%
Payroll Taxes	1,400	1,423	1,473	1,430	1.42%
LABOR COSTS	19,700	20,023	20,723	20,030	19.83%
Services & Supplies					
Training	1,100	9,000	9,000	9,000	8.91%
Outside Services	11,421	60,000	35,000	65,000	64.34%
Internal Service - Bldg Maint	472	1,500	1,500	2,000	1.98%
Internal Service - Info Tech	3,184	2,300	2,300	2,500	2.47%
Departmental Supplies	1,029	2,500	2,500	2,500	2.47%
SERVICES & SUPPLIES	17,206	75,300	50,300	81,000	80.17%
TOTAL BUDGET	36,906	95,323	71,023	101,030	100.00%

ADMINISTRATION & FINANCE

The Administration & Finance Department implements the legislative actions of the Town Council and provides for the Town's administrative, fiscal, personnel, property management, public information, and record keeping functions. In addition, its staff manages labor relations and staff support, inter-governmental relations, business license administration, risk management and insurance administration, the Town's franchise agreements for cable television and solid waste collection, and state and federal mandates such as the Americans with Disabilities Act. The Department provides administration and coordination for various Town policies, programs, and procedures.

2021-2022 ACCOMPLISHMENTS

- Updated Purchasing Policy from 1979 to reflect best practices.
- Distributed Employee Informational Handbook.
- Implemented new business license processing system.
- Implemented new agenda management system.
- Updated wiring and audio-visual technology within the Council Chambers, Historical Museum and Town Hall Conference Room.
- Procured and implemented hybrid meeting software platforms, such as Zoom Rooms, Blue Sky digital timer, Otter.ai transcription services for ADA accessibility.
- Completed first phase of laptop roll out, instead of desktop PCs for employees.
- Installed a new virtual machine, which provides more server space, back up capacity and off-site access for work from home flex schedules.
- Established a social media policy.
- Established a cybersecurity policy.
- Conduced Financial Advisory Committee meetings since covered a wide range of topics:
  - Measure D Sales Tax Renewal
  - American Rescue Plan Funds
  - Budget Development
  - Review the Town's preliminary operating and capital budget for 2022-23

2022-2023 GOALS/WORK PLAN

Below are the FY 2021-2023 Work Plan Priorities for the Administration and Finance Department, which was rolled forward from prior year and will continue in the 2022-2023 budget cycle:

1. **Priority:** Implement Record Retention Policies.
   Description: The purpose of this Policy is to ensure that necessary records and documents of are adequately protected and maintained and to ensure that records that are no longer needed by Town of San Anselmo or are of no value are discarded at the proper time and in the proper. This Policy is also for the purpose of aiding employees of Town of San Anselmo in understanding their

ADMINISTRATION AND FINANCE

obligations in retaining electronic documents - including e-mail, Web files, text files, sound and movie files, PDF documents, and all Microsoft Office or other formatted files

2. **Priority:** Update Town telephone system.
   Description: Update the phone system from an analog system to a Voice Over Internet Protocol (VoIP) system to allow for increased efficiency and usability. Voice mails can be integrated into the email system to allow for better response capabilities and customer service.
3. **Priority:** Explore opportunities to foster and support employee wellness.
   Description: Create opportunities to improve and support the wellness of Town's employees. Introduce life changing options to address chronicle health issues and promote the importance of life/work balance. The wellness program will lead to.
   - Increased productivity
   - Lower absenteeism
   - A happier, less stressed workforce
   - Improvements in your health and well-being
   - Greater employee loyalty, commitment and motivation
4. **Priority:** Explore opportunities to address structural deficit in General Fund budget.
   Description: Engage community leaders and stakeholders to explore the options to improve efficiency and secure on-going funding to address deferred maintenance and future capital needs along with a plan to support critical public services.
5. **Priority:** Streamline the accounting processes such as cash receipts, account payable, and payroll, etc.
   Description: Work with the other departments to develop a series of accounting processes that will be easy to implement and understand, also provide transparency, efficiency, and controls for these processes.

LABOR

Title	2020-2021	2021-2022	2022-2023
Town Manager	1.00	1.00	1.00
Finance & Administrative Services Director	1.00	1.00	1.00
Deputy Town Clerk/Management Analyst	1.00	1.00	1.00
Accounting/Benefits Technician	1.00	1.00	1.00
Administrative Services Technician	1.00	1.00	0.00
Senior Accountant/Financial Supervisor	0.00	1.00	0.00
Community Engagement Coordinator	0.00	0.80	0.80
Total	**5.00**	**5.80**	**4.80**

ADMINISTRATION AND FINANCE

SERVICES AND SUPPLIES

- **Training** – Staff attendance at training seminars, meetings of the League of California Cities and California Municipal Finance Officers Association.
- **Outside Services** – Annual audits ($33,500), financial reports and bank charges ($86,635), Human Resources and finance assistance ($30,000); Solid Waste Compliance consultation services ($20,000), Sales Taxes and Property Taxes management ($20,000); Business Licensing services ($25,000), DEI Audit of Town Code ($70,000).
- **Publications & dues** – Membership in the Marin Managers Association and California Society of Municipal Finance Officers.
- **Equipment maintenance** – Computers, copy machines ($6,600), telephone, postage machine, and other.
- **Internal Service Charge – Building maintenance** – Janitorial, heat/air, and minor repairs ($20,500), Electricity, gas, telephone, water, Internet/e-mail and sewer ($25,250).
- **Internal Service Charge – Info Tech** – Technology support for department ($5,000), website and accounting software ($50,000), meeting software ($20,000)
- **Office and Department Supplies** – Postage, copy paper, ink cartridges, miscellaneous supplies, updates of the Municipal Code.

GENERAL FUND
ADMINISTRATION AND FINANCE

	2020-2021	2021-2022	2021-2022	2022-2023	
	Actuals	Revised Budget	Estimated Actuals	Budget	% of Total Budget
Labor Costs					
Salaries	597,773	771,470	680,407	724,315	49.92%
Temporary Help	32,979	25,000	29,450	30,000	2.07%
Overtime	4,728	-	3,500	-	0.00%
Retirement	59,230	77,876	56,300	67,696	4.67%
Benefits	89,102	136,560	115,500	134,729	9.29%
Payroll Taxes	41,355	56,596	49,900	56,610	3.90%
LABOR COSTS	825,167	1,067,502	935,057	1,013,350	69.85%
Services and Supplies					
Training	3,962	10,000	4,000	10,000	0.69%
Outside Services	202,542	275,690	250,000	280,735	19.35%
Publications and Dues	1,173	2,000	2,900	2,000	0.14%
Equipment Maintenance	3,610	6,600	1,000	6,600	0.45%
Internal Service - Bldg Maint	37,762	44,550	38,000	45,750	3.15%
Internal Service - Info Tech	-	-	-	75,000	5.17%
Supplies	8,302	17,400	10,500	17,400	1.20%
SERVICES & SUPPLIES	257,351	356,240	306,400	437,485	30.15%
TOTAL BUDGET	1,082,518	1,423,742	1,241,457	1,450,835	100.00%

LEGAL SERVICES

The Town Attorney is the legal official of the Town, responsible for providing legal advice to the Town Council and staff and for providing legal representation as needed to protect the Town's interests. The Town Attorney is accountable directly to the Town Council.

Litigation resulting from property damage and similar claims against the Town is managed and accounted for through the Town's self-insurance liability pool program, budgeted through the Insurance Fund.

2022-2023 CHANGES/HIGHLIGHTS

The Department budget for 2022-2023 reflects an hourly rate of $250 for Town Attorney.

SERVICES AND SUPPLIES

Outside services – The cost to provide legal services is separated into three categories:

- **General Legal Counsel** – General legal counsel includes day-to-day advice on matters such as land use, elections, nuisance abatements, open meeting laws, law enforcement, and the applicability of municipal ordinances, as well as state and federal laws.
- **Litigation** – Legal expenses related to litigation.
- **Employment Legal Services** – Costs for specialized human resources legal counsel.

GENERAL FUND
LEGAL SERVICES

	2020-2021	2021-2022	2021-2022	2022-2023	
	Actuals	Revised Budget	Estimated Actuals	Budget	% of Total Budget
Services and Supplies					
Litigation	2,006	60,000	1,500	60,000	15.58%
General Legal Counsel	202,874	150,000	220,000	215,000	55.84%
Personnel Legal Services	110,396	90,000	145,000	110,000	28.57%
SERVICES & SUPPLIES	315,276	300,000	366,500	385,000	100.00%
TOTAL BUDGET	315,276	300,000	366,500	385,000	100.00%

ITEM 1.1 - ATTACHMENT 1

LIBRARY

The San Anselmo Public Library strives to be a hub of information, knowledge, culture, and inspiration in the heart of San Anselmo. The services provided by the Town Library staff are designed to meet the informational and recreational needs of residents and businesses in a timely and professional manner, to enrich the lives of library patrons and to encourage children and teens to read.

During non-pandemic times, the library welcomes over 90,000 patrons annually, circulates approximately 154,000 items, and provides over 400 programs attended by approximately 17,000 participants of all ages.

The library is open six days a week for 46 hours, provides direct services across two public desks, and offers four public Internet stations. A local history collection is maintained in the San Anselmo Historical Museum and a print and digital collection of over 100,000 items supports a community interested in knowing its own story, in life-long learning, in a thriving intellectual and physically-active environment, in professional growth and in motivating children of all ages to be readers.

During this most extraordinary time, there was a rapid pivot from traditional library programs and services to increased digital resources and the creation of an entirely virtual program including livestreaming storytime, establishing the San Anselmo Library YouTube channel, instructions on using the virtual library's digital resources, and the development of curbside service to get materials into the hands of our patrons.

2021-2022 Highlights

- Returned to 46 open hours per week.
- Eliminated overdue fines on San Anselmo Library materials.
- Expanded Large Print collection.
- Technology upgrades included a Chromebook and Roku for patron use.
- Cultivated Age-Friendly San Anselmo with Memory Kits for elders experiencing dementia and new partnership with the Alzheimer's Association for virtual programs.

LIBRARY

2022-2023 GOALS/WORK PLAN

- Identify, cultivate, and nurture library services that meet the diverse needs of patrons including library beyond walls, speaker series, and technology solutions.
- Identify, modify and implement programs, protocols, and services as library/community needs change in the wake of the recent pandemic.
- Continue to address the needs of the community as expressed in the 2022 patron survey.

LABOR

Title	2020-21	2021-22	2022-23
Town Librarian	1.00	1.00	1.00
Librarian II	1.00	1.00	1.00
Senior Library Assistant	0.80	0.80	0.80
Library Assistant	0.00	1.00	1.00
Total	**2.80**	**3.80**	**3.80**

SERVICES AND SUPPLIES

- **MARINet Membership** – County-wide automated catalog, circulation system, delivery, eBooks and databases ($91,922).
- **Print and Digital Books, DVDs and Periodicals** – Adult books ($11,068), children's books ($5,150), magazines and newspapers ($4,766), videos ($515) and audiobooks ($2,575).
- **Outside Services** – Outside programs, guest artists, performers and lecturers ($16,995).
- **Training** – Conferences, workshops, and webinars to keep staff current on library trends ($200).
- **Publications & Dues** – Library organization dues and publications for staff to maintain expertise in library, catalog and information services ($500).
- **Internal Service Charge** – **Building Maintenance** – Janitorial, elevator, heat/air and minor repairs ($30,591). Electricity, gas, water, sewer, telephone, and Internet ($13,905).
- **Equipment Maintenance** – Maintenance of office equipment and computers ($1,442).
- **Internal Service Charge – Info Tech** – technology support for department ($15,000)
- **Office and Department supplies** – Postage, copy paper, and miscellaneous supplies, cataloging, circulation, and materials repair supplies ($5,665).

GENERAL FUND

GENERAL FUND
LIBRARY

	2020-2021 Actuals	2021-2022 Revised Budget	2021-2022 Estimated Actuals	2022-2023 Budget	% of Total Budget
Labor Costs					
Salaries	245,360	339,105	249,838	364,997	46.70%
Temporary Help	41,393	50,000	64,054	50,000	6.40%
Overtime	3,057	-	-	-	0.00%
Retirement	28,166	35,745	28,982	38,007	4.86%
Benefits	62,856	100,595	81,214	97,130	12.43%
Payroll Taxes	20,523	29,468	22,789	31,205	3.99%
LABOR COSTS	401,355	554,913	446,877	581,339	74.37%
Services and Supplies					
Training	1,055	200	425	200	0.03%
Outside Services	7,393	16,500	15,524	16,995	2.17%
MARINet Database	74,555	71,970	78,282	91,922	11.76%
Publications and Dues	231	500	1,750	500	0.06%
Internal Service - Bldg Main	51,997	43,200	51,678	44,496	5.69%
Equipment Maintenance	1,103	1,400	5,000	1,442	0.18%
Internal Service - Info Tech	10,679	11,700	9,500	15,000	1.92%
Books, DVDs & Periodicals	6,848	23,373	19,500	24,074	3.08%
Supplies	6,164	5,500	9,500	5,665	0.72%
SERVICES & SUPPLIES	160,025	174,343	191,159	200,294	25.63%
TOTAL BUDGET	561,380	729,256	638,036	781,633	100.00%

GENERAL FUND

TOWN OF
SAN ANSELMO
EST. 1907

ITEM 1.1 - ATTACHMENT 1

PLANNING

This Department is responsible for land use planning and zoning. The department reviews applications for development permits, provides public information, maintains the General Plan, Climate Action Plan, and other planning documents, and enforces zoning regulations. Department staff process applications for zoning entitlements, and drafts and revise zoning regulations. Planning Department staff supports the Planning Commission, Open Space Committee, Economic Development Committee, Sustainability Commission and Racial Equity Ad Hoc Committee and represents the Town on the Marin Map Executive Committee.

2021-2022 ACCOMPLISHMENTS

- Worked on ordinances for Planning Commission review and Town Council consideration: updated Accessory Dwelling Unit regulations, revised nonconforming structure/demolition thresholds, clarify design review and noticing requirements, and accessory dwelling unit regulations to conform with state law, and electric vehicle and ADA parking regulations.
- Continued work on new multifamily objective design and development standards and inclusionary housing study.
- Supported committee projects and Zoom meetings: created new websites for COVID-19 business resources, printed COVID-19 posters, drafted newsletters for new business email list, Climate Safe California endorsement, stamp to promote pizza box composting, and MCE Deep Green campaign.
- Served on ABAG Housing Methodology Committee to develop draft methodology for the Regional Housing Needs Allocation (RHNA).
- Served on Digital Marin Steering Committee.

2022-2023 GOALS/WORK PLAN

Below are the FY 2022-23 Work Plan Priorities for the Planning Department:

1. **Priority:** Adoption of Housing Element for 2023-2031 for the Town General Plan.
   Description: Adoption of 6th planning cycle Housing Element for 1/31/23-1/31/31 Planning Period to be part of the San Anselmo General Plan, as required by the State housing element law. Staff would update the current housing element through a public process with hearings before the Planning Commission and Town Council and submission to the California Department of Housing and Community Development (HCD).
2. **Priority:** Update Circulation Element and Develop policy to implement SB 743.
   Description: Update General Plan Circulation Element and develop vehicle miles traveled (VMT) policy direction to comply with changes to the CEQA Guidelines under California Senate Bill 743 for traffic impact studies and Town Climate Action Plan.

   Develop VMT analysis methodology and set local CEQA VMT thresholds and, if applicable, screening criteria.

GENERAL FUND

PLANNING

3. **Priority:** Adopt a Safety Element for the Town *General Plan*.
   Description: The Planning and Zoning Law requires the Town to adopt a comprehensive, long-term general plan that includes a safety element for the protection of the community from unreasonable risks associated with the effects of various geologic hazards, flooding, and wildland and urban fires. The plan can include adaptation planning.

LABOR

Title	2020–21	2021–22	2022–23
Planning Director	1.00	1.00	1.00
Associate Planner	1.00	0.00	0.00
Senior Planner	0.00	0.00	1.00
Total	**2.00**	**1.00**	**2.00**

SERVICES AND SUPPLIES

- **Training** – Workshops, seminars, and conferences to keep planning staff current on planning procedures and law ($3,500).
- **Outside Services** – Update to Housing, Safety, and Circulation Element and other updates of the Town's General Plan ($460,000), and planning projects requiring use of consultants ($40,000).
- **Publications & Dues** – Planning organization dues and publications required for staff to maintain expertise in planning procedures and changes in land use law ($1,450).
- **Equipment Maintenance** – Set planning department share of Town Hall computers, copy machines, telephone, postage machine and other equipment ($6,100).
- **Internal Service Charge – Building Maintenance** – Set planning department share of Town Hall janitorial, heat/air, and minor repairs ($8,800). Set planning department share of Town Hall Electricity, gas, telephone, Internet/e-mail, water and sewer ($14,800).
- **Internal Service Charge – Info Tech** – Technology support for department ($20,000).
- **Supplies** – Set planning department share of Town Hall postage, copy paper, map paper, files, pens, printer ink ($8,200).

GENERAL FUND

GENERAL FUND PLANNING

	2020-2021 Actuals	2021-2022 Revised Budget	2021-2022 Estimated Actuals	2022-2023 Budget	% of Total Budget
Labor Costs					
Salaries	216,505	270,555	154,878	284,131	29.64%
Temporary Help	958	-	40,000	-	0.00%
Overtime	-	-	-	-	0.00%
Retirement	20,951	29,440	15,574	30,885	3.22%
Benefits	36,949	56,245	23,102	58,645	6.12%
Payroll Taxes	15,809	24,980	11,500	20,848	2.17%
LABOR COSTS	291,172	381,220	245,054	394,509	41.15%
Services and Supplies					
Training	302	3,500	750	3,500	0.37%
Outside Services	32,089	201,000	243,000	500,000	52.15%
Publications and Dues	535	1,450	750	1,450	0.15%
Equipment Maintenance	3,610	6,100	3,750	6,100	0.64%
Internal Service - Bldg Maint	17,350	23,600	21,200	25,000	2.61%
Internal Service - Info Tech	5,959	13,200	13,200	20,000	2.09%
Supplies	5,201	8,200	5,000	8,200	0.86%
SERVICES & SUPPLIES	65,046	257,050	287,650	564,250	58.85%
TOTAL BUDGET	356,218	638,270	532,704	958,759	100.00%

GENERAL FUND

TOWN OF
SAN ANSELMO
EST. 1907

ITEM 1.1 - ATTACHMENT 1

PUBLIC SAFETY – FIRE PROTECTION SERVICES

On July 1, 1982, the San Anselmo Fire Department merged with the Fairfax Fire Department to form the Ross Valley Fire Department (RVFD), administered under joint powers authority (JPA) to provide fire protection to San Anselmo, Fairfax, and the unincorporated county area known as Sleepy Hollow. Through June 30, 2010, the Department provided service to Sleepy Hollow through a contract for service with the Town of San Anselmo.

On July 1, 2010, Sleepy Hollow Fire Protection District became a full member of the joint power authority. As of July 1, 2012, the Town of Ross joined the Department as a full member. Today the JPA provides fire protection to San Anselmo, Fairfax, Ross, and the unincorporated county area known as Sleepy Hollow. The percentages of the Fire Department budget for the four members are San Anselmo 40.53%, Fairfax 23.30%, Ross 23.37%, and Sleepy Hollow 12.80%. The Department is governed by an eight- member Board of Directors, two from each agency.

In 2021 the Ross Valley Fire Department received an Insurance Services Office (ISO) rating “2” which continues the rating of “2” received in 2015. The Insurance Services Office rating impacts insurance rates for homes and businesses.

An annual budget is adopted by the Ross Valley Fire Department Board and funded through assessments to the towns of San Anselmo, Fairfax and Ross, and the Sleepy Hollow Fire Protection District. The Department also receives outside revenues in the form of contracts for service provided to the County of Marin and the Ross Valley Paramedic Authority, as well as fees for services related to plan checks and inspections.

2021-2022 ACCOMPLISHMENTS

- Worked with the Town of San Anselmo on MWPA funded projects focused on evacuation routes in The Alameda and surrounding area, Sequoia area, and Hawthorne Hill area and performed over 3,100 defensible space inspections in San Anselmo.
- Worked with Towns to fund and create a new Emergency Preparedness Coordinator position that will work across the Ross Valley. The position is filled and working with partners to build out the program and support our community.
- Responded to out of county wildfires supporting State mutual aid, including the Dixie Fire (963,000 acres) and the Caldor Fire (nearly 222,000 acres).
- Analyzed policies and procedures to prepare for implementing Lexipol in 2022- 23.

FIRE PROTECTION SERVICES

- Working off the Vehicle Replacement Plan, RVFD purchased a new Type 1 Fire Engine with expected delivery in 2023.
- Worked with the Town of San Anselmo on planning for a capital improvement project at Fire Station 20 on Butterfield Road.
- RVFD completed over 2,900 hours of training classes and with engines and fire equipment.

2022-2023 GOALS/WORK PLAN

1. **Priority:** Implement strategic wildfire prevention work in concert with Marin Wildfire Prevention Authority.
   Description: Using a strategic, holistic approach to wildfire prevention utilize MWPA local funds to support Town priorities. Work with neighboring jurisdictions to develop a Valley-wide strategy for MWPA core funding. Continue the multiagency coordination and pooled resources to complete defensible space inspections throughout the Town.
2. **Priority:** Enhance the employee performance management system by continuing evaluations and coaching, further developing the workforce.
   Description: Evaluation, annual goal setting and coaching have been implemented. Over the next two years, the Department will work to further refine and enhance the program.
3. **Priority:** Evaluate the RVFD's infrastructure and capital asset plan.
   Description: The Department's vehicle replacement schedule has been updated, next steps are to evaluate the fire station infrastructure needs and work with Towns on short- and long-term capital facility needs.
4. **Priority:** Work with the newly hired Emergency Services Coordinator to enhance resiliency within the RVFD area.
   Description: Establish a work plan in concert with the Towns and Fire District to develop Neighborhood Emergency Response groups. Develop and manage MWPA grant program for residents. Organize and create best practices for CERT and other preparedness programs.
5. **Priority:** Update and adopt new Policy and Procedure Manual for the Department.
   Description: Determine if the Department will use a commercially available product, Lexipol, or a conventional system for policies and procedures. Most policies and procedures will need to be updated, and those requiring meet and confer with labor will be negotiated and ultimately brought to the Fire Board for adoption.

FIRE PROTECTION SERVICES

OTHER COSTS

- **Property Maintenance** – Total $80,000 is budgeted for property maintenance at Stations 19 and 20, which are in San Anselmo. Out of the total budget, $15,000 for each station is budgeted as reimbursement to the Fire Department for handling routine repairs and minor improvements. Capital expenditures made at Station 20 (Butterfield Road) are matched by the Sleepy Hollow Fire Protection District, up to a maximum of $10,000.
- **Fire Equipment** – With the recent update to the Vehicle and Apparatus Replacement Schedule and Funding Plan, San Anselmo's FY2022-23 contribution for vehicle and apparatus replacement to is $143,884.

The Ross Valley Fire Department FY22-23 Approved Budget along with annual audits and other financial information can be found at:
http://www.rossvalleyfire.org/about/financial-information.

GENERAL FUND
PUBLIC SAFETY - FIRE

	2020-2021 Actuals	2021-2022 Revised Budget	2021-2022 Estimated Actuals	2022-2023 Budget	% of Total Budget
Services and Supplies					
RVFD - Fire Services	4,357,895	4,531,448	4,525,339	4,789,951	98.36%
Station 19 Maintenance	12,054	40,000	15,000	40,000	0.82%
Station 20 Maintenance	12,053	40,000	15,000	40,000	0.82%
RVFD - Disaster Coordinator	-	-	-	-	0.00%
Defensible Space Inspection	-	-	-	-	0.00%
SERVICES & SUPPLIES	4,382,002	4,611,448	4,555,339	4,869,951	100.00%
TOTAL BUDGET	4,382,002	4,611,448	4,555,339	4,869,951	100.00%

PUBLIC SAFETY – POLICE

On January 1, 2013, the San Anselmo Police Department joined the Twin Cities Police Authority, which included the City of Larkspur and the Town of Corte Madera. The new authority was named the Central Marin Police Authority. The Authority is administered under a joint powers authority to provide police services to San Anselmo, Corte Madera and Larkspur. The agency is governed by the Police Council, comprised of two members from each of the City/Town Councils of San Anselmo, Corte Madera and Larkspur.

An annual budget is adopted by the Central Marin Police Authority Council and funded through assessments to the three members. The costs for administration, communications, and investigations are shared on an equal basis with each member paying one-third. The costs for field operations, juvenile/school resource officer, and traffic are allocated according to a funding formula based upon the number of calls for service, total crimes, citations and accidents on a rolling three-year period. This method of cost allocation ensures that if one member has additional patrol field needs, the costs are fairly allocated to the town/city receiving the services.

The percentages of the Police Authority budget for the three members are: San Anselmo 38.43%, Larkspur 33.71% and Corte Madera 27.86%.

2021-2022 ACCOMPLISHMENTS

- Adapted and adjusted to the COVID-19 pandemic to ensure a healthy police department and continue police services to our communities.
  - Organized early vaccinations and boosters for all employees who are front line health care providers.
- Recruited, interviewed, conducted background investigations, and trained four Police Officers and four Police Cadets.
- Trained in many areas, including, but not limited to: Racial Equity, Duty to Intercede, Crisis Intervention, De-escalation/Communication, Emotional Intelligence, First Aid/AED, Defensive Tactics, Safer handcuffing techniques, and Urban/Wildland Fire Response for Law Enforcement.
- Established new Corporal roles and expectations to enhance service to the communities and balanced supervision in the workplace.
- Established Mentorship Program for all levels of staff.

POLICE

- Continued to work with our fire agency partners to refine responses and community notifications to fire disasters.
- Continued to focus on purchasing and refurbishing the outdated fleet, including purchase of first two all-electric vehicles.
- Trained the entire organization in the use of CIBRS (California Incident-Based Reporting System) which is a federal mandate that requires standardized crime reporting to the FBI.
- Finalized testing and successfully implemented the data gathering tool to be in compliance with the State of California mandated RIPA (Racial and Identity Profiling Act).

2022-2023 CHANGES/HIGHLIGHTS

The FY 2022-2023 Budget and Work Plan represents CMPA's commitment to fiscal responsibility and long-term sustainability, ensuring the continuation of providing the highest level of police services. This budget reflects an overall increase of $252,272 (5.38%) in San Anselmo's share over the FY2021-2022 adopted budget.

The increase in the CMPA FY 2022-2023 budget is attributed to increases in:

- Increase to salaries for current full-time employees and additional bargained for costs, pursuant to the Memorandum of Understanding agreed to in 2021. Includes addition of another Police Records Specialist position, due to increased workload as a result of new legislative mandates and technological advances.
- Increase to debt service for pension obligation bond.
- Increase to the Bay Cities Joint Powers Insurance Authority for general liability, workers' compensation, and property coverage.
- Increase to health and dental benefits for current employees and health benefits for retired full-time employees. Includes addition of another Police Records Specialist position, due to increased workload as a result of new legislative mandates and technological advances.
- Increase to PERS costs for unfunded accrued liability of current full-time employees, retired San Anselmo full-time employees, and retired Twin Cities full-time employees.
- Increase to Contract Services account due to increases in costs of cyber security, misc. IT costs, recruitment services, janitorial services, and misc. contracts.
- Increase to payment to pay down unfunded Other Post-Employment Benefits (OPEB) costs for current and retired full-time employees.
- Increase to PERS costs of current CMPA employees.
- Increase to automotive fuel and gas/electric utilities.
- Increase to the part-time employee and consultant account for additional part time human resources personnel.

POLICE

2022-2023 GOALS/WORK PLAN

- Begin development and implement an organizational wellness program for all employees to focus on general mental and physical wellness. The aim of this program is to provide resources to employees to help with long-term retention. This program will be funded by a 2-year federal grant that provides $75,000.
- Continue in-house training.
  - Including active shooter, de-escalation, mental health, duty to intercede, use of force options, and wildfire evacuations.
- Finalize POST Organizational Audit of entire agency.
- Continue our in-depth assessment of our Records and Evidence divisions to explore more efficient processes and abilities to complete the ever-increasing demands.
- Continue succession planning for supervisory and leadership positions.
- Begin a multi-year project to convert our unmarked fleet to electric vehicles to adopt more sustainable/renewable energy. This includes working with local and state entities to explore funding options for EV projects to reduce fiscal impacts to the Authority, including installation of charging infrastructure to our parking lot.
- Continue implementing newly acquired LEFTA software.
  - Including citizen complaints, internal affairs investigations, and vehicle pursuits.

The Central Marin Police Authority FY 2022-2023 Budget can be found at:
https://www.centralmarinpolice.org/227/REPORTS-AND-BUDGETS

GENERAL FUND
PUBLIC SAFETY - POLICE

	2020-2021 Actuals	2021-2022 Revised Budget	2021-2022 Estimated Actuals	2022-2023 Budget	% Total
Services and Supplies					
Police Services Contract	4,540,998	4,685,857	4,685,857	4,938,129	100.00%
Building Maintenance	5,463	-	19,400	-	0.00%
Supplies	428	-	-	-	0.00%
SERVICES & SUPPLIES	4,546,889	4,685,857	4,705,257	4,938,129	100.00%
TOTAL BUDGET	4,546,889	4,685,857	4,705,257	4,938,129	100.00%

ITEM 1.1 - ATTACHMENT 1

PUBLIC WORKS – ENGINEERING & INSPECTION

The Engineering staff is responsible for administering public works construction and maintenance projects, natural disaster preparedness and response, providing cost-effective engineering management of Town infrastructure within budget limits, delivery of accurate, reliable and timely plan/permit review and inspection services as required by the Building Code in accordance with the expectations of the Town Council and the community while improving public safety and infrastructure. Assistance services to the public on questions of drainage, road conditions, traffic safety, traffic calming, parking, red curb, open space areas, parks, etc.

The Towns infrastructure consists of the following:

- 40 Lane Miles of roads
- 20 Bridges
- 5 Ped Bridges
- 6 Buildings
- 6 Parks
- 3 Public Parking Lots
- 3 major medians
- 12 Traffic signals
- 3 Rapid Flash lighted crosswalks
- 600+ Street lights
- 21 Miles of Drainage

2021-22 ACCOMPLISHMENTS

- The Town has continued to improve the Pavement Condition Index over the past 7 years up to 69 by completing asset protection projects such as slurry seals and repaving streets throughout Town.
- Completed the Sir Francis Drake Boulevard Rehabilitation Project (Hub to Bolinas Avenue)
- Completed the 2021 Street Paving Projects (Phase A – Portions of Laurel Avenue, Crescent Road, Fern Avenue, as well as Fairview Court and Florence Avenue, Phase B – Barber Avenue, Gerlack Road, and portions of Lincoln Park and Kensington Road)
- Completed the School Bike Spine Project
- Completed the Brookside Elementary School Sidewalk Gap Closure Project
- Completed the sidewalk infill projects funded by the Transportation Authority of Marin
- Completed the Hub Transportation Study
- Completed the Downtown San Anselmo Parking Study
- Responded to the Center Avenue Bridge emergency sinkhole and completed repairs in 4 days.

ENGINEERING & INSPECTION

2022-23 GOALS/WORK PLAN

The department includes the Public Works Director, Assistant Public Director, Building Official, Building Inspector, Assistant Engineer, Project Coordinator, Permit Technician and Administrative Assistant position. Consultant Services will continue to be needed for road design, traffic engineering, flood control and other projects.

- Complete the 2022 Street Resurfacing Project (portions of Woodside and Oak Springs Drives, Angela Ave, Timothy Ave, Woodside Court, Mountain View Ave, Brookside Drive, Cordone Drive, Beverly Way, Rivera St)
- Complete the 2022 Slurry Seal Project (Sir Francis Drake Blvd, Red Hill Ave, Butterfield Road and residential streets)
- Design the 2023 Street Resurfacing Project
- Construct the Sir Francis Drake Boulevard/Saunders Avenue HAWK Pedestrian Beacon project
- Construct the Sir Francis Drake Boulevard/Broadmoor Avenue traffic signal phase separation project
- Continue working on Flood Control including the San Anselmo Creek Restoration project along with bridge replacement designs.
- Continue improving Town roads along with bicycle and pedestrian improvements. Continue the trend for increasing PCIs along with incorporating stormwater projects into street repaving projects.
- Endeavor to include green infrastructure into all capital improvement projects throughout Town.

ENGINEERING & INSPECTION

LABOR

Title	2020-21	2021-22	2022-23
Director of Public Works/Town Engineer*	0.70	0.70	0.70
Assistant Director of Public Works**	0.50	0.50	0.50
Assistant Engineer*	0.25	0.25	0.25
Building Official	1.00	1.00	1.00
Building Inspector	1.00	1.00	1.00
Building Maintenance Supervisor***	0.80	0.80	0.00
Code Enforcement Official	0.00	0.00	1.00
Permit Services Technician	1.00	1.00	1.00
Administrative Services Assistant I/II	1.00	1.00	1.00
Total	**5.25**	**6.25**	**6.45**

* 30% of the Public Works Director and 75% of the Assistant Engineer are assigned to capital project management, therefore, their correspondence salaries are reflected in Measure D Sales Tax fund.

** The Assistant Public Works Director is assigned to road projects half time; thus, half the salary is reflected in Road Maintenance fund.

*** The Building Maintenance Supervisor is assigned primarily to Engineering and Inspection (80%) and spends a portion of his time on the Isabel Cook Complex (10%) and Robson House (10%).

SERVICES AND SUPPLIES

- **Training** – Attendance at professional training seminars and conferences ($15,000).
- **Outside services** – Participation in countywide GIS digital mapping system ($20,000); Engineering services for special projects including traffic safety, emergency response, etc. ($65,000); plan checking, inspection services, and special project support ($272,000).
- **Publications & dues** – Memberships in public works and engineering organizations/ societies, professional registration fees.
- **Equipment maintenance** – Maintenance of office equipment, computers, copier, fax, phones, pagers, and 2-way radios ($5,150).
- **Internal Service Charge – Building maintenance** – Janitorial, elevators, heat/air, other maintenance ($20,600). Electricity and gas, water, telephone, Internet/e-mail, and sewer ($27,141).
- **Vehicle maintenance** – Maintenance of department vehicles.
- **Internal Service Charge – Info Tech** – Technology support for department ($50,000)
- **Office and Department supplies** – Postage, copy paper, ink cartridges, miscellaneous supplies, tools and supplies for engineering, surveying, and drafting ($17,510).

GENERAL FUND
PUBLIC WORKS - ENGINEERING INSPECTION

	2020-2021 Actuals	2021-2022 Revised Budget	2021-2022 Estimated Actuals	2022-2023 Budget	% Total
Labor Costs					
Salaries	513,341	663,630	599,332	807,088	49.35%
Temporary Help	91,563	50,000	96,000	15,000	0.92%
Overtime	1,604	-	1,500	-	0.00%
Retirement	48,179	63,535	59,066	77,838	4.76%
Benefits	93,282	130,350	166,444	175,255	10.72%
Payroll Taxes	45,023	54,533	51,703	65,413	4.00%
LABOR COSTS	792,992	962,048	974,045	1,140,594	69.74%
Services and Supplies					
Training	3,121	12,000	10,000	15,000	0.92%
Outside Services	376,504	312,000	362,500	350,000	21.40%
Workers Compensation Claim	-	-	-	-	0.00%
Publications and Dues	1,258	1,750	2,100	1,750	0.11%
Equipment Maintenance	3,610	5,000	5,000	5,150	0.31%
Internal Service - Bldg Maint	49,001	46,350	58,350	50,000	3.06%
Vehicle Maintenance	2,013	500	500	515	0.03%
Internal Service - Info Tech	40,750	50,000	50,000	55,000	3.36%
Supplies	14,108	17,000	17,000	17,510	1.07%
SERVICES & SUPPLIES	490,365	444,600	505,450	494,925	30.26%
TOTAL BUDGET	1,283,357	1,406,648	1,479,495	1,635,519	100.00%

PUBLIC WORKS – STREET & PARK MAINTENANCE

The Street and Park Maintenance division of the Public Works Department is responsible for the ongoing maintenance of Town streets, median islands, parking lots, traffic and street signs, pavement markings, curb painting, storm drains, emergency response, and other Town maintenance projects as required. In addition, staff is responsible for maintaining the Town's parks and community gathering areas (Memorial Park, Creek Park, Sorich Park, Lansdale Station Park, Imagination Park, Robson-Harrington Park and Grounds and Faude Park) and for the maintenance and upkeep of the landscaped areas surrounding Town Hall and the Community Center.

Street and Park Maintenance is also responsible for the development of improvements for most of the Town's parks and community gathering areas to further serve public needs and enhance existing landscapes. Included in this enhancement are reduction of fire fuel and improvement of accessibility for disabled persons in Town parks and public gathering areas.

2021-2022 ACCOMPLISHMENTS

- Trained the Streets and Parks staff in the use of work order software (Asset Essentials by Dude Solutions) to track and more efficiently schedule work
- Provided supervision and review of crew by outside consultant to implement ways to improve overall efficiency and productivity.
- Improved storm and flood control preparedness and response by the Streets and Parks staff along with Engineering staff.
- Replaced older gas-powered landscape equipment including blowers, weedwhackers, chainsaws, hedgers, and mowers with battery powered tools.
- COVID-19 Response.
- Implemented staff safety training protocol resulting in zero workplace accidents.
- Provided staff training for playground safety compliance.
- Operate, and maintain town wells and irrigation systems to reduce or eliminate potabile water use.
- Provide traffic control for Town special events.

2022-2023 GOALS/WORK PLAN

- Focus on internal operations and continue to improve productivity and efficiency through teamwork, cross training and accountability and the implementation of scheduling software.
- Continue to work proactively with residents, utilities, and contractors to abate traffic safety and other hazards in the public right of way.
- Continue training and work on storm water improvements as required by the State.
- Look for ways to improve maintenance on the medians and parks, along with ADA improvements in the parks and buildings.

STREET & PARK MAINTENANCE

- Inspect and clean all storm drain structures prior to winter season
- Investigate ways to replace existing older gas and diesel powered vehicles with electric powered vehicles.
- Repaint all curb markings (Red, Green, Yellow) in the downtown business district.
- Inspect and repaint all yellow pavement markings around school zones for pedestrian safety.
- Replace older faded 24" STOP signs with larger 30" signs for improved visibility and traffic safety.

LABOR

Title	2020–21	2021–22	2022–23
Maintenance Supervisor	1.00	1.00	1.00
Senior Maintenance Worker	2.00	2.00	2.00
Maintenance Workers I/II	3.00	3.00	3.00
Public Works Manager	0.00	0.00	1.00
Total	**6.00**	**6.00**	**7.00**

- **Reimbursable costs** – Safety and other work clothing provided.
- **Temporary hire/overtime** – Summer hires to supplement regular crews for street painting and other projects at peak maintenance times, overtime during storms and part-time janitorial work.

SERVICES AND SUPPLIES

- **Training** – Staff attendance at safety training seminars and CalOSHA current regulations.
- **Outside services** – Routine and specialized maintenance and repair of Town streetlights ($29,000), traffic signals ($61,000), sidewalks and other concrete work ($55,000); mandated storm water pollution control program and projects ($55,000); street sweeping ($110,000); contractor services to help maintain the Town's landscaped grounds and trees, poison oak and other brush/fire hazard removal ($75,000).
- **Equipment maintenance** – Maintenance of field radios, mowers and other equipment.
- **Internal Service Charge – Building Maintenance** – Janitorial, heat/air, and minor repairs ($14,200). Street lights, traffic signals, and other facilities; water for landscaping, electricity, internet/e-mail and sewer expenses ($123,990).
- **Vehicle Maintenance** – Fuel, oil, maintenance, and repair of maintenance vehicles.
- **Equipment Rental** – Miscellaneous equipment rental.
- **Internal Service Charge – Info Tech** – Technology support for departments ($15,500).
- **Supplies** – Materials and supplies for paving ($8,000), street maintenance ($19,500), traffic control ($13,000), and other services; supplies needed to maintain parklands and open space areas, park furnishing and removal of graffiti.

GENERAL FUND

GENERAL FUND
PUBLIC WORKS - STREET AND PARK MAINTENANCE

	2020-2021 Actuals	2021-2022 Revised Budget	2021-2022 Estimated Actuals	2022-2023 Budget	% Total
Labor Costs					
Salaries	283,198	444,480	356,807	536,499	36.18%
Temporary Help	21,938	30,000	33,253	30,000	2.02%
Overtime	1,051	-	2,000	-	0.00%
Retirement	32,235	47,130	39,922	54,457	3.67%
Benefits	90,375	138,922	147,318	156,312	10.54%
Payroll Taxes	23,560	37,735	30,561	44,007	2.97%
LABOR COSTS	452,357	698,267	609,861	821,275	55.38%
Services and Supplies					
Training	1,120	2,500	2,500	2,500	0.17%
Outside Services	606,098	456,280	586,900	385,000	25.96%
Workers Compensation Claim	-	-	-	-	0.00%
Equipment Maintenance	2,001	2,500	2,500	2,500	0.17%
Internal Service - Bldg Maint	202,152	138,190	367,000	158,895	10.72%
Vehicle Maintenance	21,964	32,000	32,000	32,000	2.16%
Internal Service - Info Tech	15,392	8,100	8,100	15,500	1.05%
Supplies	103,963	64,200	100,000	64,200	4.33%
Equipment Rental	310	1,000	1,000	1,000	0.07%
SERVICES & SUPPLIES	953,000	704,770	1,100,000	661,595	44.62%
TOTAL BUDGET	1,405,357	1,403,037	1,709,861	1,482,870	100.00%

GENERAL FUND

TOWN OF
SAN ANSELMO
EST. 1907

ITEM 1.1 - ATTACHMENT 1

RECREATION

General Fund support of the Recreation Department in past years has been equal to the total compensation of the Community Services Director and the Administrative Assistant (0.8 FTE), in addition to a number of general administrative costs.

2022-23 CHANGES/HIGHLIGHTS

In 2022-23, 100 % of the Community Services Director's total compensation and the Administrative Assistant (0.8 FTE) is reflected in the General Fund, in addition to some Outside Services, including janitorial services and internet/email services.

Administrative overhead such as payroll, finance, personnel, legal, and insurance, as well as field and building maintenance, is provided through other Town funds. The remainder of the Recreation Department's expenditures are reflected in the Recreation Fund, which is self-supported by recreation program fees.

SERVICES AND SUPPLIES

- **Internal Service Charge – Building Maintenance** – Janitorial ($1,648). Internet/e-mail ($16,995).
- **Departmental Supplies** – Postage, miscellaneous supplies ($1,545).

LABOR

Title	2020–21	2021–22	2022–23
Community Services Director	1.00	1.00	1.00
Administrative Services Assistant I/II	0.60	0.80	0.80
Total	**1.60**	**1.80**	**1.80**

GENERAL FUND
RECREATION

	2020-2021	2021-2022	2021-2022	2022-2023	
	Actuals	Revised Budget	Estimated Actuals	Budget	% Total
Labor Costs					
Salaries	167,913	190,375	186,194	202,515	68.79%
Retirement	17,294	19,105	18,489	20,179	6.85%
Benefits	26,138	34,060	32,476	35,260	11.98%
Payroll Taxes	12,797	15,408	14,101	16,263	5.52%
LABOR COSTS	224,142	258,948	251,260	274,217	93.14%
Services and Supplies					
Internal Service - Bldg Mair	1,535	16,000	1,600	18,643	6.33%
Utilities	13,888	5,000	13,750	-	0.00%
Supplies	1,810	1,500	1,500	1,545	0.52%
SERVICES & SUPPLIES	17,233	22,500	16,850	20,188	6.86%
TOTAL BUDGET	241,375	281,448	268,110	294,405	100.00%

DEBT SERVICE

In 2012-13 the Town's PERS rate was reduced to reflect the sale of Pension Obligation Bonds to pay the Town's Employer Side Fund liability of $3,521,183.91.

In 2003, CalPERS combined agencies with less than 100 members into risk pools based on plan type. The Employer Side Fund was created to account for the difference between the funded status of the pool and the funded status of individual plans.

The repayment of the Pension Obligation Bonds is reflected in the Expenditure Summary under General Fund Departments, Debt Service (Pension Obligation Bonds). Overall, the refinancing of the side fund is saving the Town approximately $60,000 per year and $600,000 over the ten-year term. The Bonds mature in fiscal year 2021-22.

The Town issued Pension Obligation Bonds to pay the employer side unfunded liability in September 2021. The first-year payment is reflected in the 2022-2023 budget. Overall, the issuance of the bonds is savings the Town approximately, $246,000 in year 1 and over $5 million over the life of the bonds.

GENERAL FUND

GENERAL FUND
DEBT SERVICE

	2020-2021	2021-2022	2021-2022	2022-2023	
	Actuals	Revised Budget	Estimated Actuals	Budget	% Total
Services					
Administration Fees	1,400	1,500	1,500	1,500	0.28%
Debt Service: Principal	211,000	227,000	227,000	285,000	53.73%
Debt Service: Interest	14,018	6,208	6,208	243,976	45.99%
SERVICES	226,418	234,708	234,708	530,476	100.00%
TOTAL BUDGET	226,418	234,708	234,708	530,476	100.00%

NON-DEPARTMENTAL SERVICES

This budget program represents services, participation in joint powers authorities (JPA's), and other expenditures that represent the Town's interest and are not attributable to a single department or program.

The Public Employees Retirement System (PERS) has changed the way public entities are charged for pension costs to better reflect actual costs and to reduce unfunded liabilities. As such, members are now charged a flat fee in addition to a percentage of salary. The Town issued Pension Obligation Bonds in 2021 to pay the unfunded liability amount. The amount recognized in retirement for the FY2022-2023 is the savings between CALPERS amortization scheduled and bond repayment schedule that will be deposited into the Pension Trust for any future unfunded liability. The difference of $246,689 is reflected in Non-Departmental Services, under Retirement for FY2022-2023.

The Town participates in a number of Joint Powers Authority (JPA) agencies county wide, and the costs for participation are budgeted under Outside Services.

The San Anselmo Volunteer Effort has generously agreed to fund an annual Volunteer Appreciation recognition and an annual Volunteer of the Year award.

SERVICES AND SUPPLIES

- **Retiree Benefits** – The Town provides $225/month for retiree health for the Town's retirees. The estimated payment needed to meet Actuarially Determined Contribution (ADC) is $156,390.
- **Training** –Training and conference attendance by Council-appointed boards, commissioners, and general staff ($3,000).
- **Outside services** – Joint powers authorities, contracts, and memoranda of understanding with other agencies: Animal control services from the Marin Humane Society ($142,000); Transportation Authority of Marin ($22,500); MERA administrative fee and replacement fund ($18,000), Marin Local Agency Formation Commission ($11,800), Association of Bay Area Governments ($3,910), Marin Climate and Energy Partnership ($2,500).
- **Internal Service Charge – Insurance** – Workers Compensation, Liability and Property Insurance ($450,000).
- **Promotion of Commerce** – Town Holiday lights; miscellaneous advertisement, Economic Development activities ($18,500).
- **Publications & dues** – Town's membership in the League of California Cities, personnel consortium, PERSPAC, and for publications ($9,850).
- **Department Supplies** – Employee recognition ($3,000), County Office of Emergency Services assistance ($6,000), volunteer recognition ($1,600), and miscellaneous supplies ($500).
- **Safety Program** – Correction of unsafe conditions, health & safety training ($5,000). Interest Expense – Cost of borrowing funds from the County of Marin to cover dry period before property tax payout ($5,000).

GENERAL FUND

NON-DEPARTMENTAL SERVICES

Investments in community service organizations that provide assistance to San Anselmo's citizens-in-need:

Community Service Investments	2020–21	2021–22	2022–23
Marin Abused Women's Services	5,000	5,000	5,000
Archie Williams High School Safe & Sober	500	500	500
Marin Housing BMR Program	2,067	2,130	2,250
Ross Valley School District Yellow Bus	30,500	30,500	35,500
Community Homeless Fund	14,145	14,145	14,152
Ross Valley Healthy Communities	2,500	2,500	2,500
Total	**$54,712**	**$54,775**	**$59,902**

GENERAL FUND

GENERAL FUND
NON DEPARTMENTAL

	2020-2021 Actuals	2021-2022 Revised Budget	2021-2022 Estimated Actuals	2022-2023 Budget	% Total
Retirement	573,838	688,101	665,213	246,689	17.44%
Retiree Benefits	139,622	144,322	139,622	156,390	11.06%
Training	-	3,000	2,000	3,000	0.21%
Outside Services	229,418	274,496	250,000	358,000	25.31%
Publications & Dues	6,170	9,850	9,850	10,146	0.72%
Promotion of Commerce	(380)	18,500	15,000	18,500	1.31%
Safety Program	126	5,000	5,000	5,000	0.35%
Department Supplies	16,267	11,100	15,000	11,500	0.81%
Internal Service - Insurance	-	-	-	600,000	42.43%
Interest Expense	2,884	5,000	5,000	5,000	0.35%
TOTAL SERVICES & SUPPLIES	967,945	1,159,369	1,106,685	1,414,224	100.00%
TOTAL BUDGET	967,945	1,159,369	1,106,685	1,414,224	100.00%

GENERAL FUND

TOWN OF
SAN ANSELMO
EST. 1907

ITEM 1.1 - ATTACHMENT 1

MEASURE D SALES TAX FUND

Revenue and expenditures associated with the Measure D one-half percent (0.5%) transactions and use tax measure passed in 2013, designed to repair potholes, repave roads, reduce traffic congestion, maintain and improve sidewalks/drainage/street medians, preserve public safety, and improve other general Town services, facilities, and infrastructure. Projects completed and funds spent are reviewed by the Capital Programs Monitoring Committee on an annual basis.

Revenue in this fund is anticipated to be approximately $1,210,000. Expenditures are budgeted for the following:

Project	Cost $
Salary/Benefits for Engineers (1.05 FTE)	189,018
Project Design and Inspection	100,000
Corp Yard Paving	40,000
Robson ADA Bathroom	50,000
Traffic Signal Controller	50,000
Slurry Seal Program (Butterfield Rd., Red Hill Ave., and various others)	300,000
Street Paving Project – Phase A – (Portions of Mt. View Ave, Beverly Way, Rivera St, Timothy Dr, and Woodside Ct)	455,702
Unprogrammed Drainage	100,000
Total Expenditures	**$1,284,720**

Also included is bridge preventive maintenance local match and bridge replacement local match.

LABOR

Title	2020-21	2021-22	2022-23
Director of Public Works/Town Engineer	0.30	0.30	0.30
Assistant Engineer	0.75	0.75	0.75
Total	**1.05**	**1.05**	**1.05**

MEASURE D SALES TAX FUND

TOWN OF SAN ANSELMO
MEASURE D SALES TAX FUND
FISCAL YEAR 2022-2023

	2020-2021	2021-2022		2022-2023
	Actual	Rev Budget	Est. Actual	Budget
BEGINNING BALANCE	310,779	812,102	812,102	845,731
REVENUE				
Measure D Sales Tax	1,121,468	1,200,000	1,260,000	1,210,000
TOTAL REVENUE	1,121,468	1,200,000	1,260,000	1,210,000
TOTAL RESOURCES	1,432,247	2,012,102	2,072,102	2,055,731
EXPENDITURES				
TOTAL EXPENDITURES	620,145	1,530,370	1,226,371	1,284,720
Net Increase/(Decrease)	501,323	(330,370)	33,629	(74,720)
ENDING BALANCE	812,102	481,732	845,731	771,011
TOTAL BUDGET	1,432,247	2,012,102	2,072,102	2,055,731

MEASURE D SALES TAX FUND

TOWN OF SAN ANSELMO
MEASURE D SALES TAX FUND
REVENUE AND EXPENDITURE SUMMARY
FISCAL YEAR 2022-2023

	2020-2021	2021-2022		2022-2023
	Actual	Rev Budget	Est. Actual	Budget
REVENUE				
Measure D Sales Tax	1,121,468	1,200,000	1,260,000	1,210,000
TOTAL REVENUE	1,121,468	1,200,000	1,260,000	1,210,000
EXPENDITURES				
Arterial Median Work	-	30,000	15,000	-
Bolinas Ave Paving	290,222	-	-	-
Bridge Prevention Maintenance Prg	12,894	18,100	18,861	-
Bridge Ave Bridge	-	35,000	-	-
Brookside School Sidewalk Gap	-	50,000	35,633	-
Center Boulevard Bridge	-	35,000	-	-
Corp Yard Paving	-	-	-	40,000
Madrone Ave Bridge	3,806	96,770	-	-
Project Design and Inspection	-	100,000	75,000	100,000
Project Management	105,604	205,500	115,000	189,018
Robson ADA Bathroom	-	20,000	-	50,000
SFD/Boadmor Traffic Signal Separation	-	-	-	100,000
Street Paving Phase A	1,068	395,000	526,877	455,702
Slurry & Crack Seal, Digouts	-	280,000	175,000	300,000
Traffic Signal Controller	-	-	-	50,000
TAM Sidewalks	7,996	-	-	-
Unprogrammed Drainage	36,611	75,000	75,000	100,000
Unprogrammed Resurfacing	132,334	190,000	190,000	-
TOTAL EXPENDITURES	620,145	1,530,370	1,226,371	1,284,720

MEASURE D SALES TAX FUND

TOWN OF
SAN ANSELMO
EST. 1907

ITEM 1.1 - ATTACHMENT 1

EMERGENCY RESERVE FUND

The Emergency Reserve Fund serves as a safety valve for unanticipated emergency needs. Prior to 2003-04, the Town's policy was to maintain a fund balance of $100,000 to ensure adequate cash flow in anticipation of emergency projects, disasters, or other unprogrammed demands. In 2003-04, $50,000 of this fund was transferred to the General Fund.

The fund was established for use during winter storms to respond to hazards on public and private property. Costs associated with private property are charged to the property owner, for reimbursement. When costs are incurred during emergencies that are declared to be federal and/or state disasters, and are eligible for disaster assistance, a reimbursement claim is filed and funds that are received are returned to the Emergency Projects Fund.

The fund has been used to record the Town's expenses incurred in conjunction with the flood that occurred on December 31, 2005 and the April 2006 damage on Allyn Avenue. As of June 30, 2014, the Town spent a total of $7.6 million in recovery costs and related improvements for the two emergency events and has received reimbursement from FEMA, OES and flood insurance for $4.7 million. Of the remaining $2.9 million costs, the Town has funded $1.7 million of fire station reconstruction with a municipal loan, leaving an unreimbursed balance of $1.2 million that was absorbed by the General Fund. Construction costs for the firehouse remodel exceeded the $1.7 million construction loan. The Town has transferred $1.7 million in General Fund money into the Emergency Projects fund since 2005 to cover unreimbursed flood-related expenses. The Town returned $21,729 in reimbursements to FEMA and OES that were subsequently disallowed.

The Town has been audited with respect to the reimbursements from FEMA and OES by the Office of the Inspector General for the flood expenses. The result of that report was a finding that the Town's expenditures were generally within the guidelines set by the federal and state government.

When costs are incurred by the Town but are not eligible for reimbursement by property owners or other agencies, the annual carryover and/or a transfer from the General Fund is recommended to replenish the fund for future needs.

On March 16, 2020, Town Manager issued a Proclamation of the Existence of a Local Emergency Related to COVID-19. The Town has been recording all the expenditures that are related to COVID-19 responses to a COVID-19 project and will submit for all qualified reimbursements to state and federal agencies.

The Town received $157,512 Coronavirus Relief Fund direct allocation of CARES Act funding from the State to reimburse the costs incurred due to the COVID-19 pandemic during the fiscal year 2020-21.

On March 11, 2021, President Biden signed the American Rescue Plan Act which provided funding to state and local governments to facilitate recovery from the economic and public health effects of the COVID-19 Pandemic. The Town is expected to receive $2.984 million. The deadline to spend the funding is December 31, 2026 with as long as the funds are obligated by December 31, 2024.

EMERGENCY RESERVE FUND

TOWN OF SAN ANSELMO
EMERGENCY RESERVE FUND
FISCAL YEAR 2022-2023

	2020-2021	2021-2022		2022-2023
	Actual	Rev Budget	Est. Actual	Budget
BEGINNING BALANCE	342,307	335,875	335,875	1,545,125
REVENUE				
Revenue	127,050	1,433,011	1,433,011	1,492,262
Transfers In	-	-	200,000	-
TOTAL REVENUE AND TRANSFERS IN	127,050	1,433,011	1,633,011	1,492,262
TOTAL RESOURCES	469,357	1,768,886	1,968,886	3,037,387
EXPENDITURES				
TOTAL EXPENDITURES	133,482	155,299	423,761	850,000
Net Increase/(Decrease)	(6,432)	1,277,712	1,209,250	642,262
ENDING BALANCE	335,875	1,613,587	1,545,125	2,187,387
TOTAL BUDGET	469,357	1,768,886	1,968,886	3,037,387

EMERGENCY RESERVE FUND

TOWN OF SAN ANSELMO
EMERGENCY RESERVE FUND
REVENUE AND EXPENDITURE SUMMARY
FISCAL YEAR 2022-2023

	2020-2021	2021-2022		2022-2023
	Actual	Rev Budget	Est. Actual	Budget
REVENUE				
Other Misc Revenue	127,050	1,433,011	1,433,011	1,492,262
Transfers In	-	-	200,000	-
TOTAL REVENUE AND TRANSFERS II	127,050	1,433,011	1,633,011	1,492,262
EXPENDITURES				
Department Supplies	27,422	50,000	5,000	50,000
Outside Services	106,060	105,299	418,761	800,000
Emergency Response	-	-	-	-
TOTAL EXPENDITURES	133,482	155,299	423,761	850,000

EMERGENCY RESERVE FUND

TOWN OF
SAN ANSELMO
EST. 1907

ITEM 1.1 - ATTACHMENT 1

DOWNTOWN REVITALIZATION FUND

As a community of residents, business owners, and commercial property owners, enlisting the cooperation of the Town of San Anselmo, we endeavor to identify and define our downtown as a desirable destination, encourage businesses to meet the needs of our community, and create a favorable center of increased social interaction and business.

Downtown Revitalization Strategy Mission Statement

In 1994, residents, businesspeople, and Town officials began to create a strategy for enhancing the appearance and vitality of downtown San Anselmo. The Town hired Urban Planning Consultant Michael Freedman to lead community workshops, which resulted in the adoption of the above mission statement, and a strategy and priorities for improving the downtown. Landscape architect George Girvin was hired by the Town to create a streetscape conceptual design, which was approved by the Council in September 1996.

The design plan consists of adding trees, old-fashioned streetlights, outside furniture such as benches, a plaza seating area, signs, and other improvements to the downtown. In May, 1997, the Town hired Greenwood & Associates to perform a study on the feasibility of raising the funds to build these downtown improvements.

In February 1998, the Town Council adopted a downtown revitalization plan to bring $300,000 of streetscape improvements to the downtown. The Council authorized hiring George Girvin to design the improvements and coordinate the design with the undergrounding of utilities and Measure G street repaving project.

In 1999-00, a fundraising campaign was conducted to raise $300,000 for the streetscape project; the total results of the fundraising campaign, including interest revenue, were $341,000.

The Downtown Revitalization Fund accounts for the revenues and expenses related to the Downtown Revitalization improvement project.

In Spring, 1999, beating out stiff competition, San Anselmo was awarded a $226,000 grant from the Metropolitan Transportation Commission's Livable Communities program to construct entry signs to San Anselmo and improvements to the Hub station bus shelters. A local match of 11%, or $22,000 was required and these improvements were completed in conjunction with the San Anselmo 2000 Streetscape Improvements.

With the completion of the downtown paving, tree planting, bench placement, electrical conduit placement, sidewalk grates and the majority of the Town Hall Plaza work, the main project is completed. Benches continue to be placed as donors indicate a desire for a memorial bench. Still to be completed is the tree lighting. Funding is utilized for downtown tree replacement, flower baskets, and other miscellaneous services.

DOWNTOWN REVITALIZATION FUND

TOWN OF SAN ANSELMO
DOWNTOWN REVITALIZATION FUND
FISCAL YEAR 2022-2023

	2020-2021	2021-2022		2022-2023
	Actual	Rev Budget	Est. Actual	Budget
BEGINNING BALANCE	13,443	10,947	10,947	8,447
REVENUE				
Revenue	-	-	-	-
TOTAL REVENUE	-	-	-	-
TOTAL RESOURCES	13,443	10,947	10,947	8,447
EXPENDITURES				
TOTAL EXPENDITURES	2,496	-	2,500	3,678
Net Increase/(Decrease)	(2,496)	-	(2,500)	(3,678)
ENDING BALANCE	10,947	10,947	8,447	4,769
TOTAL BUDGET	13,443	10,947	10,947	8,447

DOWNTOWN REVITALIZATION FUND

TOWN OF SAN ANSELMO
DOWNTOWN REVITALIZATION FUND
REVENUE AND EXPENDITURE SUMMARY
FISCAL YEAR 2022-2023

	2020-2021	2021-2022		2022-2023
	Actual	Rev Budget	Est. Actual	Budget
REVENUE				
Elders Garden Donations	-	-	-	-
TOTAL REVENUE	-	-	-	-
EXPENDITURES				
Tree Replacement	-	-	-	1,178
Outside Services - Other	2,496	-	2,500	2,500
TOTAL EXPENDITURES	2,496	-	2,500	3,678

DOWNTOWN REVITALIZATION FUND

TOWN OF
SAN ANSELMO
EST. 1907

ITEM 1.1 - ATTACHMENT 1

GRANTS FUND

This fund was initially established to track the revenue and expenditures related to legally restricted funds obtained through state grants for traffic congestion relief. The State has withheld traffic congestion funds since 2004-05. The fund is currently utilized to track all grant funds associated with road resurfacing and other related capital improvement projects. It has been renamed GRANTS FUND to more accurately reflect its use.

Included in the fund in 2022-23 are expenditures associated with the following grants:

Project	Cost $
Bridge Preventive Maintenance	60,000
Center Boulevard and Bridge Avenue Bridges	100,000
Madrone Avenue Bridge	50,000
Nokomis Avenue	50,000
Cal Recycle Recycling Grant	5,000
2022 Street Paving Project (Phase A)	410,744
Zero Waste Grant	22,000
Regional Early Action Plan	20,000
Total Expenditures	**$717,744**

- **Bridge Preventative Maintenance Program** – Funds were granted by the State for preventative maintenance in the total amount of approximately $1.2 million on three bridges consisting of Center Boulevard Bridge at Lansdale, Sir Francis Drake Bridge at Tunstead, and Barber Avenue Bridge. This funding is for bridges that do not need to be replaced but that need preventative maintenance. This fiscal year's funding is expected to be approximately $157,006 total ($138,997 from the grant, and $18,009 local match).
- **Center Boulevard and Bridge Avenue Bridges** – Federal Highway Bridge Program funding for the replacement of bridges over San Anselmo Creek at Center Boulevard and Bridge Avenue. There is a required match for this bridge grant of 11.5% that was initially anticipated to be covered by the County of Marin Flood Zone 9 Flood Fee but is now covered in the Town budget. Initial funding has been approved for conceptual design. Subsequent funds will be available for design and construction phases of the project. Funding for the entire project has been allocated by CalTrans but construction has not been authorized. Funding for the conceptual design, final design and environmental process is approximately $1,969,000 and will be authorized upon approval of the conceptual design. Due to delays with funding, this fiscal year's funding is expected to be minimal so only $5,000 total for each of the Bridge has been set aside from the local match in the coming year. We are anticipating the local match of $35,000 for each bridge from prior year will be rollover into the new fiscal year. The remainder of the grant will be spent in subsequent years as the project progresses.

GRANTS FUND

- **Madrone Avenue Bridge** – Federal Highway Bridge Program funding to rebuild the bridge over San Anselmo Creek at Madrone Avenue. Total grant for design is $1,267,875, with approximately $843,000 is scheduled to be expended this year ($843,680 from the grant and $96,700 local match). The required local match of 11.5% was being covered by the County of Marin Flood Zone 9 Flood Fee but now is incorporated into the Town budget. The remainder of the grant will be spent in subsequent years as the project progresses. Funding for the entire project was delayed but it appears that funding has been authorized by CalTrans to continue.
- **Nokomis Avenue** – Federal Highway Bridge Program funding to rebuild the bridge over San Anselmo Creek at Nokomis Avenue. The estimated design dollars for this year is $1,260,000. There is no required local match for this bridge grant. The remainder of the grant will be spent in subsequent years as the project progresses. Funding for the entire project was delayed along with bridges throughout California due to funding issues but it appears that funding has been authorized by CalTrans to continue.
- **Cal Recycle** recycling grant has awarded the Town a $5,000 grant used to purchase and replace public recycling containers as well as clean up litter in parks, recreation areas, and roadways. The goal of CalRecycle's beverage container recycling program is to reach and maintain an 80 percent recycling rate for all California refund value beverage containers.
- **2022 Street Paving Project (Phase A**) – The Transportation Authority of Marin (TAM) has awarded Measure AA funding to the Town in an amount of $410,000 for FY2022-23. This money will be used to partially fund the 2021 Street Paving Phase A project (Portions of Laurel Avenue, Crescent Road, Fern Avenue, as well as Fairview Court and Florence Avenue).
- **Zero Waste Grant** through the Hazardous and Solid Waste JPA. The Zero Waste Grant amount is release in early-July. $32,160 (including approximately $11,160 carried over from 2019-2020) is expected to be spent on implementation of the Town's Single Use Food Ware Ordinance and Plastic Bag Ordinance and educational efforts to reduce resident waste, which is increasing, and increase composting and recycling.
- **Local Early Action Planning Grants Program (LEAP).** Like the SB2 Planning Grant, LEAP provides support to jurisdictions to engage in housing related planning activities to facilitate housing production. The Town will receive $65,000 for staff time to implement programs in the current housing element, preparation of the updated Housing Element and programs to implement the next housing element. The Town budgets the $50,000 funding for the staff time in the general fund under Other State Revenue line item.

GRANTS FUND

TOWN OF SAN ANSELMO
GRANTS FUND
FISCAL YEAR 2022-2023

	2020-2021	2021-2022		2022-2023
	Actual	Rev Budget	Est. Actual	Budget
BEGINNING BALANCE	119,504	106,404	106,404	(25,526)
REVENUE				
Revenue	326,204	6,444,369	1,079,096	717,744
TOTAL REVENUE	326,204	6,444,369	1,079,096	717,744
TOTAL RESOURCES	445,708	6,550,773	1,185,500	692,218
EXPENDITURES				
TOTAL EXPENDITURES	339,304	6,444,369	1,211,026	717,744
Net Increase/(Decrease)	(13,100)	-	(131,930)	-
ENDING BALANCE	106,404	106,404	(25,526)	(25,526)
TOTAL BUDGET	445,708	6,550,773	1,185,500	692,218

GRANTS FUND

TOWN OF SAN ANSELMO
GRANTS FUND
REVENUE AND EXPENDITURE SUMMARY
FISCAL YEAR 2022-2023

Description	2020-2021	2021-2022		2022-2023
	Actual	Rev Budget	Est. Actual	Budget
REVENUE				
Bike Spine	-	228,000	269,000	-
Bridge Avenue Bridge	-	984,500	-	50,000
Bridge Preventive Maintenance	34,091	138,997	22,449	60,000
Center Blvd Bridge	(46,385)	984,500	-	50,000
Madrone Ave Bridge	138	843,680	35,834	50,000
Nokomis Ave Bridge	22,040	1,260,000	19,531	50,000
SFD Rehab - Hub to Bolinas Ave	67,829	1,019,000	4,219	-
HAWK Pedestrian Signal at Saunders Ave/SFD	-	24,000	-	-
Hub Study	-	150,000	-	-
Imagination Park	46,320	-	34,715	-
Local Early Action Planning (LEAP)	-	15,000	-	-
Other Revenue	-	-	60,000	
Regional Early Action Plan	-	20,000	-	20,000
Red Hill Median - Donation	-	-	-	-
State Library Grant	4,929	-	-	-
State Recycling Grant	-	5,000	5,000	5,000
Street Paving Phase A - Measure AA	-	230,692	230,692	410,744
SB2 - Building Homes and Job Act project	-	160,000	-	-
TAM Brookside School Sidewalk	-	340,000	350,000	-
TAM - Measure A		-	-	-
TAM - Measure AA		-	-	-
Tam Safe Pathways	176,372		26,716	
Zero Waste Grant	20,870	41,000	20,940	22,000
TOTAL REVENUE	326,204	6,444,369	1,079,096	717,744
EXPENDITURES				
Bike Spine OBAG 2 Grant	50	228,000	213,210	-
Bridge Ave Bridge	-	984,500	-	50,000
Bridge Preventive Maintenance	40,854	138,997	27,695	60,000
Center Blvd Bridge	-	984,500	-	50,000
Madrone Ave Bridge	30,455	843,680	12,530	50,000
Nokomis Ave Bridge	33,497	1,260,000	15,094	50,000
SFD Rehab - Hub to Bolinas Ave	46,483	1,019,000	427,750	-
HAWK Pedestrian Signal at Saunders Ave/SFD	-	24,000	12,809	-
Hub Study	49,884	150,000	132,566	-
Imagination Park	34,870	-	17,647	-
Local Early Action Planning (LEAP)	-	15,000	-	-
Regional Early Action Plan	-	20,000	1,725	20,000
Red Hill Median - Donation	15,698	-	-	-
State Library Grant	-	-	-	-
State Recycling Grant	-	5,000	-	5,000
Street Paving Phase A - Measure AA	-	230,692	-	410,744
SB2 - Building Homes and Job Act project	-	160,000	-	-
TAM Brookside School Sidewalk	-	340,000	350,000	-
TAM - Measure A - SF Blvd Payback	-	-	-	-
TAM - Measure AA - SF Blvd Payback	-	-	-	-
TAM Safe Pathways	74,171		54,020	
Zero Waste Grant	13,342	41,000	-	22,000
TOTAL EXPENDITURES	339,304	6,444,369	1,211,026	717,744

RECREATION FUND

The Recreation Department is responsible for developing and administering programs and services that enrich lives and help meet social, recreational, leisure and cultural needs of youth, families, and older adults through direct and contract programs.

Town residents and the greater Ross Valley community are provided a variety of sports, leisure, arts and recreational activities and classes for all ages and abilities throughout the year. Program highlights include sports programs, afterschool care, afterschool enrichment, a dog park, a skate park, and events. Summer day camps, specialty camps, and sports camps fill an important need in the Ross Valley for quality, affordable summer programming for children. The Parkside Preschool program has been serving preschool-aged children (and their parents) for over 45 years.

The Department provides staff support to our senior community. We work with the Ross Valley Seniors program and our Age-friendly Committee offers recreational, social, educational programming and outreach to seniors.

We provide support to the Parks and Recreation Commission, Arts Commission, Dog Park Committee, Age-Friendly Committee, and Skate Park Committee. The Recreation Fund is self-supporting except for general administrative functions such as payroll, finance, legal, maintenance and the Community Services Director's and the Administrative Services Assistant's compensation. Internet services and some maintenance functions are provided through the General Fund contribution to the Recreation Department. The Recreation Fund recoups its expenditures through class and program fees, as well as associated revenues such as advertising sales and rental/reservations income.

RECREATION FUND

2021-22 ACCOMPLISHMENTS

- The Recreation Department increased enrollment during FY 2021-22. We were able to serve more members of the community by following the COVID health recommendations and protocols. As the recommendations and protocols changed staff added additional programming.
- During the COVID-19 Pandemic the Recreation Department and the Age-Friendly Committee continued to offer virtual programs and community outreach programs designed to support and enrich the lives of older adults. The department also restarted our adult and senior in-person programming.
- Skateboarding continues to grow in popularity throughout our community. In San Anselmo there are kids both young and well into their teens who use our facility. Due to its constant use, it was time for the Town to rehabilitate and rebuild the skate park. We completed a rebuild of the skate park in partnership with Proof Lab. The rebuild included new ramps and concrete elements.
- In partnership with the Recreation Department the Arts Commission completed the Paint Box: Utility Art Box Art Project. Twelve utility boxes were painted by local artist, bringing art to unexpected public places, and enhancing the beauty and artistic vibrancy of San Anselmo.
- The Community Advisory Committee for Millennium Playground at Memorial Park completed improvements within the playground footprint with the intent of improving the playground for use by the community for the next twenty years. The Committee, Town staff and community volunteers made repairs to the existing playground equipment. The playground was also repainted and the artist from the Isabel Cook Community Center studios painted fairy-tale like details on the playground equipment.

2021-22 CHANGES/HIGHLIGHTS

The Recreation Department saw a significant increase in participation levels in existing activities and programs due to the lifting of COVID-19 restrictions from the State and County Health Departments. Our sports programs grew from previous years because they offered children the opportunity to get outside, be active and socialize. We also brought back pre-pandemic programs and added new and creative programs.

2022-23 WORK PLAN PRIORITIES

Below are the FY 2022-23 Work Plan Priorities for the Recreation Department:

1. **Priority:** Adult and Senior In-Person Programming
   Description: During 2020-21, because of the State and County guidelines, all adult and senior in-person programming was suspended for over a year. Staff has reopened many programs. We will continue to grow adult and senior programming adding new and updated classes and social opportunities.
   Employee Impact: Moderate
   Fiscal Impact: Low**.**

RECREATION FUND

2. **Priority:** Expand Recreation Programming to Include Toddler Enrichment
   Description: The Recreation Department is looking forward to starting a new toddler enrichment program that will allow young children and their families to explore our local parks and create community through play. The program will include art projects, nature- based activities, and sensory experiences at both Memorial Park and Robson Harrington Park throughout the year.
   Employee Impact: Moderate
   Fiscal Impact: Low**.**
3. **Priority:** Restart the Department's Teen Programming at the Robson Harrington House.
   Description: The Department will reopen the Station at the Robson Harrington House. The Station provides a safe place for teens to go after school, do their homework, take part in a variety of activities, and socialize.
   Employee Impact: Moderate
   Fiscal Impact: Low**.**
4. **Priority:** Update the Recreation Department Software Platform to Civic Rec.
   Description: The new software platform will align with our Town's website software. The new program offers a simpler public interface that is more customizable on the backend, which allows recreation staff to take control of our public image and create a registration experience that is uncomplicated and effective for the community.
   Employee Impact: Low
   Fiscal Impact: There is an initial fee for set-up and training of the new software program. We anticipate a savings in fees after the first year**.**
5. **Priority:** Age-Friendly Strategic Plan
   Description: Age-Friendly San Anselmo will present a completed strategic plan to Town Council. To achieve the Vision of the strategic plan, the Town and the community will develop and reinforce a culture that allows for people to actively age with dignity, respect, and independence. Nurturing a commitment to an age-friendly future will be an essential factor in successfully implementing the strategies in the plan.
   Employee Impact: Moderate
   Fiscal Impact: Low**.**
6. **Priority:** Make Improvements to Programming areas at the Robson Harrington House.
   Description: The Department plans to make improvements to the interior of the Robson Harrington House. Our Robson After-School program operates out of this location. The program is very popular and over the years there has been significant wear and tear on the interior of the house. Improvements will include buffing and resealing the floors, repainting the interior of the house and new window coverings on the first floor**.**
   Employee Impact: Moderate
   Fiscal Impact: Projects will be funded based on program revenue.

RECREATION FUND

7. **Priority:** Resurface Memorial Park Tennis Courts.
   Description: Over the past two years the use of the tennis courts at Memorial Park has doubled. After the courts are resurfaced staff would like to add pickle ball nets and lines to two of the four tennis courts. We will engage the community for feedback and policy setting for pickle ball before we add pickle ball courts.
   Employee Impact: High
   Fiscal Impact: The preliminary repair costs are estimated to be between $175,00 to $200,000. The Town has not identified a funding source for the resurfacing.
8. **Priority:** Millennium Playground Community Advisory Committee.
   Description: The Town will explore potential opportunities to make improvements within the playground footprint with the intent of improving the playground for use by the community for the next twenty years. This step would include retaining a playground design professional to identify opportunities, engaging the community to receive input about any suggested improvements, and developing a funding plan.
   Employee Impact: Moderate
   Fiscal Impact: The outcome of the committee's work included cost estimates for playground design consultation along with funding to complete the identified repair and improvement projects.

SERVICES AND SUPPLIES

- **Outside Services** – Credit card charges, registration software, technologies services, professional fees. ($145,400)
- **Temp Salaries** – Part-time recreation staffing costs ($10,000).
- **Dues** – Professional organization dues and publications required for staff to maintain expertise in recreation, catalog and information services ($1,000).
- **Training** – Seminars, workshops and conferences to keep staff current on recreation trends, best practices and policies and procedures ($5,000)
- **Building maintenance** – Minor building repairs ($1,000).
- **Equipment Maintenance** – Maintenance of office and computer equipment ($1,500)
  Utilities – Electricity and telephone ($16,500)
- **Office Supplies** – Postage, copy paper, ink cartridges, and miscellaneous supplies ($6.000).
  Promotional/Marketing – Advertising, program brochure and mailing ($34,605).

LABOR

Title	2020–21	2021–22	2022–23
Recreation Supervisor	2.00	2.00	2.00
Recreation Coordinator I/II	3.00	3.00	3.00
Administrative Services Assistant	0.20	0.00	0.00
Total	**5.20**	**5.00**	**5.00**

* The Recreation Director and the Administrative Services Assistant (0.80 FTE) are accounted for in the General Fund

RECREATION FUND

PROGRAMS

Revenues and expenses are budgeted for each program area.

- **Sports** – includes youth and adult sports leagues, classes, and clinics, Tumbling and gymnastics classes.
- **Culture** – includes art, theatre, food, music, babysitting certification, and yoga, etc. for youth and adults.
- **Child Care** – includes Parkside Preschool program, on-campus after school enrichment classes, Robson After Care program, and summer art, sports, and general day camps for youth.
- **Facility Rentals/Other** – includes picnic reservations and field rental revenue; Robson House and ICC facility rental revenue; advertising revenue and other miscellaneous items.
- **Administration** – includes staff salaries, benefits, and training; office expenses; utilities expense; credit card fees; registration software fees; activity guide production costs; marketing costs; and equipment maintenance costs.

RECREATION FUND

TOWN OF SAN ANSELMO
RECREATION FUND
FISCAL YEAR 2022-2023

	2020-2021	2021-2022		2022-2023
	Actual	Rev Budget	Est. Actual	Budget
BEGINNING BALANCE	533,015	343,672	343,672	767,698
REVENUE				
Revenue	1,088,781	1,348,625	1,992,589	1,877,632
TOTAL REVENUE	1,088,781	1,348,625	1,992,589	1,877,632
TOTAL RESOURCES	1,621,796	1,692,297	2,336,261	2,645,330
EXPENDITURES				
Operating Expenditures	1,204,388	1,426,675	1,487,869	1,851,144
Capital Expenditures	-	-	-	-
Transfers Out	73,736	80,694	80,694	26,488
TOTAL EXPENDITURES AND TRANSFERS O	1,278,124	1,507,369	1,568,563	1,877,632
Net Increase/(Decrease)	(189,343)	(158,744)	424,026	-
ENDING BALANCE	343,672	184,928	767,698	767,698
TOTAL BUDGET	1,621,796	1,692,297	2,336,261	2,645,330

RECREATION FUND

TOWN OF SAN ANSELMO
RECREATION FUND
REVENUE AND EXPENDITURE SUMMARY
FISCAL YEAR 2022-2023

	2020-2021	2021-2022		2022-2023
	Actuals	Budget	Est. Actual	Budget
REVENUE				
Sports Programs	436,575	434,125	588,029	518,768
Cultural Programs	69,077	93,000	148,062	110,176
School Programs/Childcare	561,447	787,000	1,229,961	1,212,188
Events and Other Revenue	21,682	34,500	26,537	36,500
TOTAL REVENUE	1,088,781	1,348,625	1,992,589	1,877,632
EXPENDITURES PROGRAMS ADMINISTRATI				
ADMINISTRATION LABOR COSTS				
Regular Salaries	200,757	235,310	260,206	249,759
Temporary Help	9,731	10,000	10,000	10,000
Overtime	192	-	6,500	6,000
Retirement	19,472	23,390	24,064	24,652
Other Benefits	29,739	32,215	47,379	42,038
Payroll Taxes	16,533	19,440	20,677	19,777
SUB-TOTAL LABOR COSTS	276,424	320,355	368,826	352,226
SERVICES AND SUPPLIES				
Outside Services	104,152	171,866	184,762	170,150
Training	324	3,000	1,000	5,000
Publications and Dues	356	1,000	1,000	1,000
Building Maintenance	1,496	1,500	500	1,000
Equipment Maintenance	62	1,500	50	3,000
Utilities	16,454	15,000	15,877	16,500
Promotion/Marketing	1,348	21,500	15,075	34,605
Furniture	-	-	-	500
Office/Departmental Supplies	6,770	9,750	2,250	14,500
SUB-TOTAL SERVICES AND SUPPLIES	130,962	225,116	220,514	246,255
TOTAL PROGRAM ADMINISTRATION	407,386	545,471	589,339	598,481
EXPENDITURES PROGRAMS OPERATIONS				
Sports Programs	145,453	176,504	194,541	278,264
Cultural Programs	57,501	51,490	82,637	70,874
School Programs and Childcare	593,316	651,210	616,351	901,925
Events and Other	732	2,000	5,000	1,600
SUB-TOTAL PROGRAMS OPERATIONS	797,002	881,204	898,529	1,252,663
CAPITAL OUTLAY - CONSTRUCTION	-	-	-	-
TRANSFERS OUT - GENERAL FUND	73,736	80,694	80,694	26,488
TOTAL EXPENDITURES	1,278,124	1,507,369	1,568,563	1,877,632

RECREATION FUND

TOWN OF
SAN ANSELMO
EST. 1907

ITEM 1.1 - ATTACHMENT 1

SPECIAL REVENUE FUNDS

Community Services Master Plan Fund 93

Road Maintenance Fund 97

State Gasoline Tax Fund 101

Library Tax Fund 105

Robson House Fund 109

Special Events Fund 113

Measure A Parks Tax Fund 117

Isabel Cook Center (ICC) Fund 121

Measure C Wildfire Tax Fund 125

Climate Action Fund 129

Creekside Common Fund 133

SPECIAL REVENUE FUNDS

TOWN OF
SAN ANSELMO
EST. 1907

ITEM 1.1 - ATTACHMENT 1

COMMUNITY SERVICES MASTER PLAN FUND

The Community Services Master Plan Fund was initiated in 2014-15 to reflect the revenue and expenditures associated with the Community Facilities Master Planning process. This fund is intended to be used for master planning projects related to Town parks and recreation activities and facilities.

The project was initially funded by a $50,000 grant from Marin County Supervisor Katie Rice and a transfer of $60,000 from the Recreation Fund.

During the Community Facilities Master Plan process, community input was collected from a variety of community members to help develop ideas for the Town's community facilities. A Master Plan was adopted by the Council at the end of the process, and work will continue toward the goal of carrying out the goals of the Master Plan.

At the completion of Community Facilities Master Plan, funding was set aside to explore capital funding options.

In 2018-19, the Town Council allocated $30,000 from the General Fund reserve balance for use in a public information program to increase awareness about the Memorial Park Restoration Project.

SPECIAL REVENUE FUNDS

TOWN OF SAN ANSELMO
COMMUNITY SERVICES MASTER PLAN FUND
FISCAL YEAR 2022-2023

	2020-2021	2021-2022		2022-2023
	Actual	Rev Budget	Est. Actual	Budget
BEGINNING BALANCE	4,851	4,851	4,851	4,851
REVENUE				
Revenue & Transfers In	-	-	-	-
TOTAL REVENUE & TRANSFERS	-	-	-	-
TOTAL RESOURCES	4,851	4,851	4,851	4,851
EXPENDITURES				
TOTAL EXPENDITURES	-	4,000	-	4,000
Net Increase/(Decrease)	-	(4,000)	-	(4,000)
ENDING BALANCE	4,851	851	4,851	851
TOTAL BUDGET	4,851	4,851	4,851	4,851

SPECIAL REVENUE FUNDS

TOWN OF SAN ANSELMO
COMMUNITY SERVICES MASTER PLAN FUND
REVENUE AND EXPENDITURE SUMMARY
FISCAL YEAR 2022-2023

	2020-2021	2021-2022		2022-2023
	Actual	Rev Budget	Est. Actual	Budget
REVENUE				
Transfers In	-	-	-	-
TOTAL REVENUE	-	-	-	-
EXPENDITURES				
Outside Services	-	4,000	-	4,000
TOTAL EXPENDITURES	-	4,000	-	4,000

SPECIAL REVENUE FUNDS

TOWN OF
SAN ANSELMO
EST. 1907

ITEM 1.1 - ATTACHMENT 1

ROAD MAINTENANCE FUND

With the adoption of the 2002-03 budget, the Town Council formally recognized its commitment to the ongoing need for road maintenance beyond the resources provided by the Measure G bond funds. To provide additional funds for road maintenance, the Town Council directed staff to budget $400,000 in this fund annually. A Road Impact Fee for construction to be charged on construction projects was approved and collection of that fee began in December 2002. The road impact fee was extended to garbage vehicles in December 2004. Revenue received from the Road Impact Fee and the Garbage Impact Fee is restricted to the Road Maintenance Fund.

In FY 2022-23, Road Impact fees for construction are estimated at $420,000 and for garbage trucks at $84,000. A General Fund contribution of $450,000 to the fund is included to reflect the Town's continued commitment to road maintenance. This fund also includes Senate Bill 1 (SB) gas tax at approximately $280,000.

A new 5-Year Capital Improvement Plan (CIP) was prepared by staff in 2019 based on the pavement management program report that outlines the pavement condition index (PCI) of Town streets. It was reviewed and recommended to the Town Council by the Capital Program Monitoring Committee. It was also reviewed by the Planning Commission for compliance with the California Environmental Quality Act and conformance with the Town's General Plan. The 5 Year CIP was approved by Town Council in 2019.

The Plan calls for the following projects to be completed in 2022-23::

Project	Cost $
Salary/Benefits for Engineers (1.5 FTE)	216,310
Alderny ADA Ramps	10,000
CMP Replacment	45,000
Misc Intersection Striping	10,000
Street Paving Project - Phase B	683,554
Stormwater Regulations	100,000
Other ADA	10,000
Traffic Signal Controller	50,000
Unprogrammed Paving	100,000
Total Expenditures	**$1,224,864**

SPECIAL REVENUE FUNDS

ROAD MAINTENANCE FUND

The Capital Improvement Plan document is available for review on the Town's website at **https://www.townofsananselmo.org/Archive.aspx?AMID=77**.

LABOR

Title	2020-21	2021-22	2022-23
Assistant Director of Public Works	0.50	0.50	0.50
Project Coordinator	1.00	1.00	1.00
Total	**1.50**	**1.50**	**1.50**

SPECIAL REVENUE FUNDS

TOWN OF SAN ANSELMO
ROAD MAINTENANCE FUND
FISCAL YEAR 2022-2023

	2020-2021	2021-2022		2022-2023
	Actual	Rev Budget	Est. Actual	Budget
BEGINNING BALANCE	399,072	253,972	253,972	182,714
REVENUE				
Revenue & Transfers In	1,150,593	1,136,666	1,131,549	1,235,987
TOTAL REVENUE AND TRANSFERS IN	1,150,593	1,136,666	1,131,549	1,235,987
TOTAL RESOURCES	1,549,665	1,390,638	1,385,521	1,418,701
EXPENDITURES				
TOTAL EXPENDITURES	1,295,693	1,224,200	1,202,807	1,224,864
Net Increase/(Decrease)	(145,100)	(87,534)	(71,258)	11,123
ENDING BALANCE	253,972	166,438	182,714	193,837
TOTAL BUDGET	1,549,665	1,390,638	1,385,521	1,418,701

SPECIAL REVENUE FUNDS

TOWN OF SAN ANSELMO
ROAD MAINTENANCE FUND
REVENUE AND EXPENDITURE SUMMARY
FISCAL YEAR 2022-2023

	2020-2021	2021-2022		2022-2023
	Actual	Rev Budget	Est. Actual	Budget
REVENUE				
Interest Income	511	1,000	300	1,000
Road Impact Fees: Construction	424,629	370,000	417,000	420,000
Road Impact Fees: Grbg Trucks	84,000	84,000	84,000	84,000
Reimbursement	-	29,500	29,500	-
TOTAL REVENUE	509,140	484,500	501,300	505,000
TRANSFERS IN				
from General Fund	425,000	400,000	400,000	450,000
from SB1	216,453	252,166	230,249	280,987
TRANSFERS IN	641,453	652,166	630,249	730,987
TOTAL REVENUE & TRSF IN	1,150,593	1,136,666	1,131,549	1,235,987
EXPENDITURES				
Alderny ADA Ramps	-	-	-	10,000
Bike Spine	-	29,500	29,500	-
Bolinas Ave Paving Construction	615,000	-	-	-
CMP Replacement	-	-	-	45,000
HAWK Pedestrian Signal	-	6,000	58,536	-
Hub Study	7,260	20,000	11,033	-
Low Impact Development	-	-	-	-
Median Improvement	-	-	-	-
Misc Intersection Striping	-	-	-	10,000
Salaries and Benefits	182,551	201,600	201,600	216,310
SFD Rehab - Hub to Bolinas Ave	1,199	132,100	102,138	-
Street Paving Phase B	72,322	525,000	500,000	683,554
Stormwater regulations	-	-	-	100,000
Other ADA	-	10,000	-	10,000
Traffic Signal Controller	-	-	-	50,000
Unprogrammed Drainage	-	-	-	-
Unprogrammed Resurfacing	417,361	300,000	300,000	100,000
TOTAL EXPENDITURES	1,295,693	1,224,200	1,202,807	1,224,864

STATE GASOLINE TAX FUND

California municipalities receive a portion of the state gasoline taxes, allocated on a per capita basis, to be used for street maintenance work. Interest earnings on any funds on deposit in the gas tax fund are required to accrue to that fund. Funds may be transferred from the gas tax fund to other funds during the year for street maintenance work.

Starting in 1997-98, the full amount of gas tax revenue received in the fiscal year is transferred to the General Fund on an ongoing basis, rather than just the projected revenue amount, as long as estimated Street Maintenance costs exceed the Town's gas tax revenue.

On April 28, 2017, the Governor signed Senate Bill 1 (SB1), an increase in vehicle registration fees along with per-gallon gas and diesel tax increases. Distribution of funds to San Anselmo will follow the apportionment formula used for the current gas tax. Funding will be available for basic road maintenance, rehabilitation and critical safety projects on local streets and roads.

SPECIAL REVENUE FUNDS

TOWN OF SAN ANSELMO
STATE GASOLINE TAX FUND
FISCAL YEAR 2022-2023

	2020-2021	2021-2022		2022-2023
	Actual	Rev Budget	Est. Actual	Budget
BEGINNING BALANCE	-	-	-	-
REVENUE				
Revenue	503,686	589,936	602,271	638,946
TOTAL REVENUE	503,686	589,936	602,271	638,946
TOTAL RESOURCES	503,686	589,936	602,271	638,946
EXPENDITURES	503,686	589,936	602,271	638,946
TOTAL EXPENDITURES &TRANSFERS O	503,686	589,936	602,271	638,946
Net Increase/(Decrease)	-	-	-	-
ENDING BALANCE	-	-	-	-
TOTAL BUDGET	503,686	589,936	602,271	638,946

SPECIAL REVENUE FUNDS

TOWN OF SAN ANSELMO
STATE GASOLINE TAX FUND
REVENUE AND EXPENDITURE SUMMARY
FISCAL YEAR 2022-2023

	2020-2021	2021-2022		2022-2023
	Actual	Rev Budget	Est. Actual	Budget
REVENUE				
State Gasoline Tax - Regular	287,233	337,770	339,450	357,959
State Gasoline Tax - SB1	216,453	252,166	262,821	280,987
TOTAL REVENUE	503,686	589,936	602,271	638,946
EXPENDITURES				
Transfers Out - General Fund	287,233	337,770	339,450	357,959
Transfers Out - Road Maintenance Fund	216,453	252,166	262,821	280,987
TOTAL EXPENDITURES	503,686	589,936	602,271	638,946

SPECIAL REVENUE FUNDS

TOWN OF
SAN ANSELMO
EST. 1907

ITEM 1.1 - ATTACHMENT 1

SPECIAL REVENUE FUNDS

LIBRARY TAX FUND

The voters of San Anselmo approved a Special Library Services Tax of $49 per parcel effective July 1, 2010. The revenue from the tax was restricted to expenditures for expanding library hours, improving children's services at the Library, including hiring a special children's librarian, and enhancing general Library services.

A special Library Fund was created to record the revenue from the tax measure and the allowable expenditures. Any funds that are not expended at the end of a given year remain in the Fund and are available for budgeted expenditures in future years.

The voters of San Anselmo approved a renewal of the tax in June 2014 at $54 per parcel for nine years, with an annual increase of 3% per year. It is anticipated that the Special Library Services Tax will create revenue of $297,222 for the Library next year. A special Library Tax Oversight Committee was established with the parcel tax renewal and monitors expenditures from this fund.

The Special Library Services Tax requires that the tax funding augment, not displace, funding provided by the Town. To that end, the ordinance requires that the tax continues to be levied only if Town funding of the library remains above 90% of the amount budgeted for 2012-2013 ($449,765). The $449,765 figure was arrived at by taking the 2012-2013 Library budget ($545,685) and subtracting the budgeted donations from the Friends of the Library ($14,426), budgeted State library funding ($4,290) and budgeted library fines ($27,230). 90% of $499,739 is **$449,765**.

The amount budgeted in the General Fund for the Library in this proposed budget is $773,734, which is within the allowable parameters in the Special Library Tax Services measure.

LIBRARY TAX FUND

2021-22 HIGHLIGHTS

- Returned to three weekly in-person storytimes on the library lawn, including Spanish storytime.
- Reinvented the Hoot, the library monthly e-newsletter, to a weekly publication.
- Expanded e-book and e-audio collections to serve the needs of all patrons.
- Digital resources included NewsBank, Wall Street Journal, JobNow/VetNow, and Consumer Reports online.
- Expansion of adult programs to include Marin Master Gardener programs.
- Successful return of read to a dog, the Teen Library Council, the Lion Dance performers, Día de Los Ninos and the 17th Night of the Poets.
- Prepared at least 50 Grab and Go craft kits for children each month.

LABOR

Title	2020-21	2021-22	2022-23
Children's Librarian	1.00	1.00	1.00
Library Assistant	0.53	1.00	1.00
Senior Library Assistant	0.20	0.20	0.20
Total	**1.73**	**2.20**	**2.20**

SERVICES AND SUPPLIES

- **MARINet** – Membership in Link Plus, a Statewide inter-library loan service ($6,065) and additional databases, such as Mango Language, and Overdrive e-books.
- **Equipment maintenance** – Maintenance of computers ($1,500).
- **Internet** – CENIC (Corporation for Education Network Initiatives in California) High speed Internet ($11,353).
- **Materials** – Print and digital books, magazines, newspapers, and film ($35,200). Outside Services – Program and special events expenditures ($250).
- **Department supplies** – Postage, copy paper, and miscellaneous supplies, cataloging, circulation, and materials repair supplies ($10,000).

SPECIAL REVENUE FUNDS

TOWN OF SAN ANSELMO
LIBRARY TAX FUND
FISCAL YEAR 2022-2023

	2020-2021	2021-2022		2022-2023
	Actual	Rev Budget	Est. Actual	Budget
BEGINNING BALANCE	72,788	96,141	96,141	59,656
REVENUE				
Revenue	281,519	288,565	288,565	297,222
TOTAL REVENUE	281,519	288,565	288,565	297,222
TOTAL RESOURCES	354,307	384,706	384,706	356,878
EXPENDITURES				
TOTAL EXPENDITURES	258,166	322,373	325,050	346,825
Net Increase/(Decrease)	23,353	(33,808)	(36,485)	(49,603)
ENDING BALANCE	96,141	62,333	59,656	10,053
TOTAL BUDGET	354,307	384,706	384,706	356,878

SPECIAL REVENUE FUNDS

TOWN OF SAN ANSELMO
LIBRARY TAX FUND
REVENUE AND EXPENDITURE SUMMARY
FISCAL YEAR 2022-2023

Description	2020-2021	2021-2022		2022-2023
	Actual	Rev Budget	Est. Actual	Budget
REVENUE				
Library Tax	281,519	288,565	288,565	297,222
TOTAL REVENUE	281,519	288,565	288,565	297,222
EXPENDITURES				
LABOR COSTS				
Regular Salaries	99,160	142,290	142,308	146,984
Temporary Help	31,385	44,500	40,790	44,500
Retirement	8,671	12,780	11,855	13,119
Overtime	1,284	-	-	-
Other Benefits	40,960	45,815	48,259	47,757
Payroll Taxes	9,930	14,624	14,624	14,983
TOTAL LABOR COSTS	191,390	260,009	257,836	267,343
SERVICES AND SUPPLIES				
Outside Services - Programming	-	250	-	250
MARINet Database	4,769	4,061	4,061	6,065
Equipment Maintenance	-	1,500	-	1,500
Internet - CENIC	10,412	11,353	11,353	8,417
Department Supplies	1,211	10,000	8,500	10,000
Adult Books	15,531	10,000	12,500	15,000
Childrens' Books	8,033	10,000	5,500	10,000
Audio/Visual Books	899	1,000	800	1,000
DVDs	7,405	7,200	8,500	8,750
E Books	18,516	7,000	16,000	18,500
TOTAL SERVICES AND SUPPLIES	66,776	62,364	67,214	79,482
TOTAL EXPENDITURES	258,166	322,373	325,050	346,825

ROBSON HOUSE FUND

The Robson House is an elegant mansion that was donated to the Town in 1968, with the agreement that it be used for the benefit of the community's children. In 1978 a Robson-Harrington House Association was formed to restore, manage, and maintain the house as a civic, educational, recreational, and cultural center. In 2005 the Association was unable to find new board members willing to take on the considerable responsibilities of the house and the organization disbanded. Management of the house has reverted to the Town.

Revenue from the rental of the upstairs offices has been sufficient over past years to cover the ongoing operation and routine maintenance of the house. However, since 2011-12, personnel, utility and maintenance costs have risen to the point that rental revenue does not cover the regular costs. Rental increases were implemented in 2015-16, but even with a rental increase, rental revenue is not sufficient to cover the considerable deferred maintenance work and capital improvements that are needed to restore and maintain the house. The Town is budgeting $50,000 for adding an ADA bathroom, half of the cost will be funded through Measure D Sales Tax fund.

LABOR

Title	2020-21	2021-22	2022-23
Building Supervisor*	0.10	0.10	0.10

*10% of the Building Supervisor's time is charged to the Robson Fund. A portion of the Building Supervisor's time (80%) is spent on other Town work and is funded in the Engineering and Inspector budget. The remaining 10% is charged to the Isabel Cook Center Fund.

The Building Supervisor provides custodial, maintenance, and repair services for the upkeep of the Robson House.

SERVICES AND SUPPLIES

- **Outside services** – Pest control services, landscape services, fire safety equipment; special assistance for repairs ($2,110).
- **Building maintenance** – Janitorial Service ($15,600), other repair services ($1,500), Robson ADA bathroom ($40,000, ½ of the cost will be funded through Measure D sales tax).
- **Utilities** – Electricity, water, telephone, and sewer ($7,000).
- **Department supplies** – Material and supplies needed to maintain Robson house ($1,000).
- **Possessory tax payment** – Taxable possessory interest assessment ($2,400).

SPECIAL REVENUE FUNDS

TOWN OF SAN ANSELMO
ROBSON HOUSE FUND
FISCAL YEAR 2022-2023

	2020-2021	2021-2022		2022-2023
	Actual	Rev Budget	Est. Actual	Budget
BEGINNING BALANCE	134,588	27,212	27,212	81,018
REVENUE				
Revenue & Transfers In	35,400	35,400	80,316	26,220
TOTAL REVENUE AND TRANSFERS I	35,400	35,400	80,316	26,220
TOTAL RESOURCES	169,988	62,612	107,528	107,238
EXPENDITURES				
TOTAL EXPENDITURES	142,776	63,660	26,510	57,263
Net Increase/(Decrease)	(107,376)	(28,260)	53,806	(31,043)
ENDING BALANCE	27,212	(1,048)	81,018	49,975
TOTAL BUDGET	169,988	62,612	107,528	107,238

SPECIAL REVENUE FUNDS

TOWN OF SAN ANSELMO
ROBSON HOUSE FUND
REVENUE AND EXPENDITURE SUMMARY
FISCAL YEAR 2022-2023

Description	2020-2021	2021-2022		2022-2023
	Actual	Rev Budget	Est. Actual	Budget
REVENUE				
Dovetail	8,415	9,180	-	-
Moment Records	20,400	20,400	20,400	20,400
Social Rep, LLC	6,585	5,820	7,500	5,820
Transfers In	-	-	52,416	-
TOTAL REVENUE	35,400	35,400	80,316	26,220
EXPENDITURES				
LABOR COSTS				
Regular Salaries	-	9,213	-	9,677
Overtime	-	-	-	-
Retirement	-	1,292	-	1,358
Other Benefits	400	2,840	-	2,978
Payroll Taxes	-	705	-	740
TOTAL LABOR COSTS	400	14,050	-	14,753
SERVICES AND SUPPLIES				
Outside Services	55,421	2,110	2,110	2,110
Building Maintenance	17,449	37,100	17,640	30,000
Utilities	5,715	7,000	6,760	7,000
Supplies	(28)	1,000	-	1,000
Possessory Tax Payment	3,819	2,400	-	2,400
TOTAL SERVICES AND SUPPLIES	82,376	49,610	26,510	42,510
TRANSFERS OUT	60,000	-	-	-
TOTAL EXPENDITURES	142,776	63,660	26,510	57,263

SPECIAL REVENUE FUNDS

TOWN OF
SAN ANSELMO
EST. 1907

ITEM 1.1 - ATTACHMENT 1

SPECIAL REVENUE FUNDS

SPECIAL EVENTS FUND

This fund was established in 2000-01 to track the revenues and expenses associated with the annual fall event, Country Fair Day, and other special events sponsored by the Town.

The fund was opened with a balance comprised of the proceeds from 1996 Country Fair Day, which was organized and managed by the Town for the first time in many years.

The fund was utilized in 2007 to fund events commemorating the Town's centennial anniversary. Over the years the events that the Town offers to our community have changed. The fund continues to be used to support Town events, such as the Live on the Avenue music series, the Goblins Spooktacular, Teen and Children's Egg Hunts, Breakfast with Santa, the Holiday Tree Lighting and other events.

$44,000 is committed for expenditures for the annual Town events.

SPECIAL REVENUE FUNDS

TOWN OF SAN ANSELMO
SPECIAL EVENTS FUND
FISCAL YEAR 2022-2023

	2020-2021	2021-2022		2022-2023
	Actual	Rev Budget	Est. Actual	Actual
BEGINNING BALANCE	11,655	10,923	10,923	5,713
REVENUE				
Revenue	-	24,400	14,325	22,000
TOTAL REVENUE	-	24,400	14,325	22,000
TOTAL RESOURCES	11,655	35,323	25,248	27,713
EXPENDITURES				
TOTAL EXPENDITURES	732	24,255	19,535	44,040
Net Increase/(Decrease)	(732)	145	(5,210)	(22,040)
ENDING BALANCE	10,923	11,068	5,713	(16,327)
TOTAL BUDGET	11,655	35,323	25,248	27,713

SPECIAL REVENUE FUNDS

TOWN OF SAN ANSELMO
SPECIAL EVENTS FUND
REVENUE AND EXPENDITURE SUMMARY
FISCAL YEAR 2022-2023

	2020-2021	2021-2022		2022-2023
	Actual	Rev Budget	Est. Actual	Budget
REVENUE				
Breakfast With Santa	-	3,500	325	3,500
Country Fair Day	-	15,800	-	-
Egg Hunt	-	500	1,000	1,000
Goblins Parade	-	500	3,000	1,000
Picnics On The Plaza	-	4,100	-	-
United Against Hate	-	-	-	1,000
Live on the Avenue	-	-	10,000	15,000
Holiday Tree Lighting	-	-	-	500
TOTAL REVENUE	-	24,400	14,325	22,000
EXPENDITURES				
Temporary Help	-	1,050	-	11,700
Overtime	-	-	-	-
Retirement	-	-	-	-
Payroll Taxes	-	80	-	895
Outside Services	-	-	-	-
Special Event Supplies	-	500	-	500
ASCAP Royalties - Events	368	350	398	400
BMI Royalties - Events	364	375	368	375
Breakfast With Santa	-	2,000	76	1,700
Country Fair Expenses	-	14,000	-	-
Egg Hunt	-	1,000	1,213	1,200
Goblins Parade	-	800	1,027	1,000
Picnics On The Plaza	-	4,100	-	-
United Against Hate	-	-	700	1,000
Live on the Avenue	-	-	15,753	25,000
Holiday Tree Lighting	-	-	-	270
TOTAL EXPENDITURES	732	24,255	19,535	44,040

SPECIAL REVENUE FUNDS

TOWN OF
SAN ANSELMO
EST. 1907

ITEM 1.1 - ATTACHMENT 1

MEASURE A PARKS TAX FUND

Revenue and expenditures associated with San Anselmo's share of the Marin County one-quarter per cent (.25%) transactions and use tax, entitled Marin Parks, Open Space, and Farmland Preservation Transactions and Use Tax Ordinance are accounted for in this fund. Countywide, the tax is estimated to generate $10,000,000 per year for ten years. Fifteen per cent (15%) of the Measure A revenue is allocated to cities, towns, and special districts. San Anselmo's share is 6.65% of that revenue.

The Town Council annually determines the distribution of these funds. For 2014-15, and including the partial funding for 2013-14, $55,494 was contributed to the Sky Ranch open space acquisition and $66,794 to Memorial Park improvements.

In 2015-16 and going forward, the Town Council decided that on an ongoing basis, 70% of the annual funding will go to Memorial Park and 30% to open space acquisition.

On January 26, 2021, the Town Council approved the Memorial Park Playing Field Repair Project for an estimated amount of $675,000, which $47,000 will come from General Fund Reserve and approximately $439,000 from Measure A Parks Tax Fund to supplement $177,982 from State Proposition 68 Per Capita funding. Due to the water shortage emergency, the construction will was postponed in FY2021-22 and the budget will be carryover for FY2022-23.

SPECIAL REVENUE FUNDS

TOWN OF SAN ANSELMO
MEASURE A PARKS TAX FUND
FISCAL YEAR 2022-2023

	2020-2021	2021-2022		2022-2023
	Actual	Rev Budget	Est. Actual	Budget
BEGINNING BALANCE	509,389	572,678	572,678	570,404
REVENUE				
Revenue	109,842	233,933	63,823	226,168
TOTAL REVENUE	109,842	233,933	63,823	226,168
TOTAL RESOURCES	619,231	806,611	636,501	796,572
EXPENDITURES				
TOTAL EXPENDITURES	46,553	840,767	66,097	796,572
Net Increase/(Decrease)	63,289	(606,834)	(2,274)	(570,404)
ENDING BALANCE	572,678	(34,156)	570,404	-
TOTAL BUDGET	619,231	806,611	636,501	796,572

SPECIAL REVENUE FUNDS

TOWN OF SAN ANSELMO
MEASURE A PARKS TAX FUND
REVENUE AND EXPENDITURE SUMMARY
FISCAL YEAR 2022-2023

	2020-2021	2021-2022		2022-2023
	Actual	Rev Budget	Est. Actual	Budget
REVENUE				
Measure A Parks Tax	106,928	51,951	62,823	44,186
Interest	2,914	4,000	1,000	4,000
Proposition 68 Park Grant	-	177,982	-	177,982
Donation/Transfers In	-	-	-	-
TOTAL REVENUE	109,842	233,933	63,823	226,168
EXPENDITURES				
SERVICES AND SUPPLIES				
Memorial Park Improvement	46,553	675,000	66,097	617,549
Open Space	-	165,767	-	179,023
TOTAL EXPENDITURES	46,553	840,767	66,097	796,572

SPECIAL REVENUE FUNDS

TOWN OF
SAN ANSELMO
EST. 1907

ITEM 1.1 - ATTACHMENT 1

ISABEL COOK CENTER (ICC) FUND

The Isabel Cook Center (ICC), located at 1000 Sir Francis Drake Boulevard, is a former school property purchased by the Town with Community Development Block Grant funds. It is comprised of the Recreation Center and the Isabel Cook Community Center. The Center houses the Recreation Department offices, multi-purpose rooms, a gymnasium and a pre-school center. The classroom space is leased to a community non-profit organization of artists, called the San Anselmo Artist Studios.

Rents from the artist studios support the maintenance, operating expenses, repairs, and capital improvements in the complex.

The lower office space (3,800 square feet) is vacant, and the space is being utilized by the Recreation Department for community programs. Several of the upstairs classrooms were converted to artist's studios and are fully rented.

LABOR

Title	2020–21	2021–22	2022–23
Building Supervisor*	0.10	0.10	0.10

*10% of the Building Supervisor's time is spent at ICC. A portion of his time (80%) is spent on other Town work and is funded in the Engineering & Inspection Department. The Town took over management of Robson House in 2006-07 and 10% of the Building Supervisor's time is charged to that fund.

The Building Supervisor provides maintenance and repair services for the upkeep of the ICC complex.

SERVICES AND SUPPLIES

- **Outside Services** – Special assistance for repair of facility and equipment. Outside services during employee vacation/leave. ($5,000)
- **Building Maintenance** – Building Maintenance – Janitorial service, heat/air HVAC; routine and emergency building maintenance projects ($47,000); Generator installation ($29,000).
- **Utilities** – Electricity, gas, telephone, and sewer ($22,000). Water is paid through the Parks budget.
- **Supplies** – Miscellaneous office supplies and minor supply items for building operation.

SPECIAL REVENUE FUNDS

TOWN OF SAN ANSELMO
ISABEL COOK CENTER FUND
FISCAL YEAR 2022-2023

	2020-2021	2021-2022		2022-2023
	Actual	Rev Budget	Est. Actual	Budget
BEGINNING BALANCE	(9,381)	17,287	17,287	37,499
REVENUE				
Revenue	88,099	107,668	107,668	107,688
TOTAL REVENUE	88,099	107,668	86,804	107,688
TOTAL RESOURCES	78,718	124,955	104,091	145,187
EXPENDITURES				
TOTAL EXPENDITURES	70,223	117,550	66,592	112,196
Net Increase/(Decrease)	17,876	(9,882)	20,212	(4,508)
ENDING BALANCE	8,495	7,405	37,499	32,991
TOTAL BUDGET	78,718	124,955	104,091	145,187

SPECIAL REVENUE FUNDS

TOWN OF SAN ANSELMO
ISABEL COOK CENTER FUND
REVENUE AND EXPENDITURE SUMMARY
FISCAL YEAR 2022-2023

	2020-2021	2021-2022		2022-2023
	Actual	Rev Budget	Est. Actual	Budget
REVENUE				
ICC Rental Income	88,099	107,668	107,668	107,688
TOTAL REVENUE	88,099	107,668	107,668	107,688
EXPENDITURES				
LABOR COSTS				
Regular Salaries	-	9,213	-	9,630
Overtime	-	-	-	-
Retirement	-	1,292	-	1,351
Other Benefits	400	2,840	-	2,978
Payroll Taxes	-	705	-	737
TOTAL LABOR COSTS	-	14,050	-	14,696
SERVICES AND SUPPLIES				
Outside Services	7,381	5,000	550	5,000
Building Maintenance	41,037	76,000	39,329	70,000
Utilities	21,405	22,000	21,467	22,000
Office/Department Supplies	-	500	-	500
TOTAL SERVICES AND SUPPLIES	70,223	103,500	66,592	97,500
TOTAL EXPENDITURES	70,223	117,550	66,592	112,196

SPECIAL REVENUE FUNDS

TOWN OF
SAN ANSELMO
EST. 1907

ITEM 1.1 - ATTACHMENT 1

SPECIAL REVENUE FUNDS

MEASURE C WILDFIRE TAX FUND

In 2019, 17 Marin County agencies with fire prevention responsibilities formed the Marin Wildfire Prevention Authority ("MVPA") through a Joint Exercise of Powers Agreement. MWPA's mission is to organize and sustain local wildfire prevention including early detection, warning and alerts; reducing vegetation; ensuring defensible space around homes, neighborhoods and critical infrastructure; and improving disaster evacuation routes/procedures; Marin Wildfire Prevention Measure, levying up to $10 cents per building square foot tax ($75 per multifamily unit) for ten years, providing $19,300,000 annually, with annual inflation adjustments, independent citizen oversight/audits, and low-income senior exemptions.

Defensible space and fire-resistant structure evaluations, and mitigation of fire threats thereof, will be funded by 20% of the tax measure proceeds and will be done on a shared service basis or by responsible member.

Local-specific wildfire prevention efforts will be funded by 20% of the tax measure proceeds and allocated to each member in proportion to revenue raised in each member's respective tax rate areas. Members must certify that the tax measure proceeds are used consistent with the purpose of the Authority and that the tax measure expenses result in a higher level of service than would otherwise be provided by the member. The approximately allocation to the Town is $365,000 in FY2022-23.

SPECIAL REVENUE FUNDS

TOWN OF SAN ANSELMO
MEASURE C WILDFIRE TAX FUND
FISCAL YEAR 2022-2023

	2020-2021	2021-2022		2022-2023
	Actual	Rev Budget	Est. Actual	Budget
BEGINNING BALANCE	-	280,282	280,282	250,603
REVENUE				
Revenue	365,422	362,648	349,737	365,000
TOTAL REVENUE	365,422	362,648	349,737	365,000
TOTAL RESOURCES	365,422	642,930	630,019	615,603
EXPENDITURES				
TOTAL EXPENDITURES	85,140	362,648	379,416	365,000
Net Increase/(Decrease)	280,282	-	(29,679)	-
ENDING BALANCE	280,282	280,282	250,603	250,603
TOTAL BUDGET	365,422	642,930	630,019	615,603

SPECIAL REVENUE FUNDS

TOWN OF SAN ANSELMO
MEASURE C WILDFIRE TAX FUND
REVENUE AND EXPENDITURE SUMMARY
FISCAL YEAR 2022-2023

	2020-2021	2021-2022		2022-2023
	Actual	Rev Budget	Est. Actual	Budget
REVENUE				
Measure C Wildfire Tax	365,422	362,648	349,737	365,000
TOTAL REVENUE	365,422	362,648	349,737	365,000
EXPENDITURES				
SERVICES AND SUPPLIES				
Outside Services - Fire Prevention	85,140	362,648	327,000	365,000
TRANSFERS OUT	-	-	52,416	-
TOTAL EXPENDITURES & TRANSFERS OUT	85,140	362,648	379,416	365,000

SPECIAL REVENUE FUNDS

TOWN OF
SAN ANSELMO
EST. 1907

ITEM 1.1 - ATTACHMENT 1

CLIMATE ACTION FUND

On June 11, 2019, the Town Council adopted *Resolution 4286: A Resolution of the Town Council of the Town of San Anselmo Adopting San Anselmo Climate Action Plan 2030*. The Climate Action Plan 2030 (CAP) is a master plan to guide the development and implementation of local, measurable actions and initiatives to reduce local Greenhouse Gas Emissions 54% by 2030 (from a 2005 baseline, or 45% below 1995 levels), with the goal of community-scale carbon neutrality by no later than 2045.

On February 11, 2020, the Town Council adopted *Resolution No. 4325: A Resolution of the Town Council of the Town of San Anselmo Declaring a Climate and Ecological Emergency in San Anselmo*. In declaring a Climate and Ecological Emergency, the Town Council directed the Town Manager to (i) work with staff to include consideration and prioritization of consistency with the Climate Action Plan 2030, as amended or updated, in staff reports to council and (ii) to earmark specific funds for greenhouse gas and climate change mitigation annually, beginning in the Fiscal Year 2020-2021. Subsequently, the 2020-2021 budget, adopted on June 23, 2020, included the addition of Appendix B, which tracked the Town's anticipated spending on Climate Action Plan Implementation Programs.

With the adoption of the FY 2021-2022 budget, the Town Council formally recognized the ongoing need to devote resources towards implementing its Climate Action Plan. The creation of the Climate Fund is intended to help the Town build its capacity to identify and undertake climate action at the municipal level and to provide maximum transparency to the public on the Town's progress.

In 2021-2022, funds were budgeted in the amount of $55,000 to hire a part-time Climate Action Coordinator (as described in the San Anselmo 2021-2023 Work Plan Priorities, Administrative & Finance Priority #10, adopted on April 27th, 2021) and for other expenses related to identifying and implementing policies, programs, and grants consistent with the Town's stated climate action goals. The proposed FY 2022-2023 budget for the Climate Action Fund is $136,000, which includes approximately $21,000 for an awarded grant from CalRecycle to assist in SB 1383 implementation with the goal of keeping food and other compostable materials out of landfills to reduce emissions that contribute to climate change. $75,000 is budgeted for outside services to cover half of the salary for the part-time Climate Action Coordinator and hire consultants on an as needed basis to support implementation of climate action programs and policies. Additional expenditures may include funding for rebate programs (e.g., electric landscape equipment rebates, E-bike rebates), pilot programs (e.g., innovative EV charging technologies for multi-family dwellings), and outreach/educational materials.

SPECIAL REVENUE FUNDS

TOWN OF SAN ANSELMO
CLIMATE ACTION FUND
FISCAL YEAR 2022-2023

	2020-2021	2021-2022		2022-2023
	Actual	Rev Budget	Est. Actual	Budget
BEGINNING BALANCE	-	-	-	10,000
REVENUE				
Revenue	-	55,000	55,000	126,000
TOTAL REVENUE AND TRANSFER IN	-	55,000	55,000	126,000
TOTAL RESOURCES	-	55,000	55,000	136,000
EXPENDITURES				
TOTAL EXPENDITURES	-	55,000	45,000	80,000
Net Increase/(Decrease)	-	-	10,000	46,000
ENDING BALANCE	-	-	10,000	56,000
TOTAL BUDGET	-	55,000	55,000	136,000

SPECIAL REVENUE FUNDS

TOWN OF SAN ANSELMO
CLIMATE ACTION FUND
REVENUE AND EXPENDITURE SUMMARY
FISCAL YEAR 2022-2023

	2020-2021	2021-2022		2022-2023
	Actual	Rev Budget	Est. Actual	Budget
REVENUE				
Intergovernmental Revenue	-	-	-	21,000
Transfers In	-	55,000	55,000	105,000
TOTAL REVENUE	-	55,000	55,000	126,000
EXPENDITURES				
SERVICES AND SUPPLIES				
Outside Services	-	50,000	40,000	75,000
Equipment Grant	-	5,000	5,000	5,000
TOTAL EXPENDITURES	-	55,000	45,000	80,000

SPECIAL REVENUE FUNDS

TOWN OF
SAN ANSELMO
EST. 1907

ITEM 1.1 - ATTACHMENT 1

CREEKSIDE COMMON FUND

At the Town Council meeting on September 25, 2018, Town Council discussed an idea related to planning for the renovation of Creek Park following the potential removal of the building at 630-636 San Anselmo Avenue, otherwise known as “Building Bridge 2”. This building was removed as part of the Marin County Flood Control and Water Conservation District’s San Anselmo Flood Risk Reduction Program (SAFRR).

An idea was brought forward for a local design competition using the post-building removal, expanded space at Creek Park as a canvas for collecting visionary design proposals with the potential to enliven the park and adjoining commercial district.

The goal of this competition would be to foster creativity and challenge participants to think outside the box; to propose exciting ideas that have never been considered possible for the space; to reimagine the existing urban/park landscape; and to aid in bringing Creek Park into the 21st Century.

On June 25, 2019, the Town Council directed the Town Manager to convene a Community Advisory Group (CAG) to help oversee the public process portion of the design development and conduct fundraising for the project.

Since then, the Town has received total donation amount of $351,500 toward identifying opportunities to improve public areas associated with the flood control project, with the funding used for preliminary geotechnical studies, preliminary structural bridge, and abutment design, and RHAA renderings to visualize potential improvements.

More funding will be needed for the constructions of the project.

SPECIAL REVENUE FUNDS

TOWN OF SAN ANSELMO
CREEKSIDE COMMONS FUND
FISCAL YEAR 2022-2023

	2020-2021	2021-2022		2022-2023
	Actual	Rev Budget	Est. Actual	Budget
BEGINNING BALANCE	154,000	211,433	211,433	136,433
REVENUE				
Revenue	201,500	-	-	-
TOTAL REVENUE	201,500	-	-	-
TOTAL RESOURCES	355,500	211,433	211,433	136,433
EXPENDITURES				
TOTAL EXPENDITURES	144,067	201,500	75,000	136,433
Net Increase/(Decrease)	57,433	(201,500)	(75,000)	(136,433)
ENDING BALANCE	211,433	9,933	136,433	-
TOTAL BUDGET	355,500	211,433	211,433	136,433

SPECIAL REVENUE FUNDS

TOWN OF SAN ANSELMO
CREEKSIDE COMMONS FUND
REVENUE AND EXPENDITURE SUMMARY
FISCAL YEAR 2022-2023

	2020-2021	2021-2022		2022-2023
	Actual	Rev Budget	Est. Actual	Budget
REVENUE				
Donations	201,500	-	-	-
Interest	-	-	-	-
Misc Revenue	-	-	-	-
TOTAL REVENUE	201,500	-	-	-
EXPENDITURES				
SERVICES AND SUPPLIES				
Outside Services	138,567	201,500	75,000	136,433
Misc Services	5,500	-	-	-
Transfer Out	-	-	-	-
TOTAL EXPENDITURES	144,067	201,500	75,000	136,433

SPECIAL REVENUE FUNDS

TOWN OF
SAN ANSELMO
EST. 1907

ITEM 1.1 - ATTACHMENT 1

CAPITAL RECONSTRUCTION FUND

The Capital Reconstruction Fund accounts for the revenues and expenses of capital projects. It is funded primarily from the General Fund. Prior to the funding crisis beginning in 2003, Town policy had been to make a transfer from current year General Fund revenues, which is generally 70% of the amount of the prior year General Fund carryover (excess of revenues carried over from the prior year, less any transfer needed to replenish the Emergency Projects Fund). Because of the funding shortfalls in the past several years, Council has opted to allocate funds where they are most needed.

Projects are funded on a prioritized basis, based on health, safety, liability, cost benefit, cost avoidance, and ability to deliver services, and categorized according to prior commitments (whether by written agreement with an outside entity, or by policy direction), liability/safety, and other. The project expenditures are typically categorized as follows:

- **Commitments due to grants and loans.** These are projects for which the Town has entered into written agreements for repayment of funds, or for which the Town would be responsible for returning funds to the grantee; in some cases, these funds have already been spent.
- **Recommended due to liability and/or safety concerns.** These are projects for which Council has previously appropriated funds, established by policy as a priority, or given direction to staff to accomplish**.**
- **Recommended based on prior commitments and/or direction.** These are projects for which Council has previously appropriated funds, established by policy as a priority, or given direction to staff to accomplish.
- **Other**. These are projects or other funding recommendations that do not fit into another category. The unprogrammed projects appropriation is used to fund unanticipated and emergency needs, as well as cost overruns in budgeted projects.

2022-23 GOALS/WORK PLAN

This budget year $50,000 is carryover from prior year budget for Wayfinding project.

2022-23 EXPENDITURES

Recommended based on prior commitments and/or direction:	Cost $
Other – Wayfinding and Signage Program (Phase II) carryover	50,000
Total 2022–23 Expenditures	**50,000**

CAPITAL PROJECTS FUNDS

TOWN OF SAN ANSELMO
CAPITAL RECONSTRUCTION FUND
FISCAL YEAR 2022-2023

	2020-2021	2021-2022		2022-2023
	Actual	Rev Budget	Est. Actual	Budget
BEGINNING BALANCE	(15,018)	67,074	67,074	65,650
REVENUE				
Revenue & Transfers In	107,341	-	-	-
TOTAL REVENUE AND TRANSFERS I	107,341	-	-	-
TOTAL RESOURCES	92,323	67,074	67,074	65,650
EXPENDITURES				
TOTAL EXPENDITURES	25,249	50,000	1,424	50,000
Net Increase/(Decrease)	82,092	(50,000)	(1,424)	(50,000)
ENDING BALANCE	67,074	17,074	65,650	15,650
TOTAL BUDGET	92,323	67,074	67,074	65,650

CAPITAL PROJECTS FUNDS

TOWN OF SAN ANSELMO
CAPITAL RECONSTRUCTION FUND
REVENUE AND EXPENDITURE SUMMARY
FISCAL YEAR 2022-2023

	2020-2021	2021-2022		2022-2023
	Actual	Rev Budget	Est. Actual	Budget
REVENUE				
Miscellaneous Revenue	7,341	-	-	-
Transfers In	100,000	-	-	-
TOTAL REVENUE AND TRANSFERS IN	107,341	-	-	-
EXPENDITURES				
Snack Shack Improvement	-	-	1,424	-
Fire Station Building Repair	1,467	-	-	-
Wayfinding Program	-	50,000	-	50,000
Construction - Trails	23,782	-	-	-
TOTAL EXPENDITURES	25,249	50,000	1,424	50,000

CAPITAL PROJECTS FUNDS

TOWN OF
SAN ANSELMO
EST. 1907

ITEM 1.1 - ATTACHMENT 1

EQUIPMENT REPLACEMENT FUND

The Equipment Replacement Fund accounts for revenues that are restricted or otherwise designated for the purchase of Town equipment.

In the past, the Town does not have an adopted equipment replacement schedule and funding program, but instead schedules equipment acquisition and replacement as funds are available. The Town has allocated about $200,000 each year for the last ten years from the General Fund to the Equipment Fund to fund the following costs:

- Town-wide computer hardware/software replacement or acquisition.
- The debt service payment for the Marin Emergency Radio Authority (MERA) Bonds.
- Vehicle lease payment for three electronic vehicles.
- Fund Town's Climate Action Plan activities.

During 2020-21, the Town updated its inventory listings for Vehicle and Technology programs. The Town decided to create two separate Internal Services Funds, which are Technologies Replacement and Vehicle Replacement fund to maintain the Town's future Technology and Vehicle replacement activities.

CAPITAL PROJECTS FUNDS

TOWN OF SAN ANSELMO
EQUIPMENT REPLACEMENT FUND
FISCAL YEAR 2022-2023

	2020-2021	2021-2022		2022-2023
	Actual	Rev Budget	Est. Actual	Budget
BEGINNING BALANCE	213,706	298,944	298,944	120,193
REVENUE				
Revenue & Transfers In	215,000	-	-	-
TOTAL REVENUE AND TRANSFERS IN	215,000	-	-	-
TOTAL RESOURCES	428,706	298,944	298,944	120,193
EXPENDITURES				
TOTAL EXPENDITURES	129,762	195,000	178,751	75,000
Net Increase/(Decrease)	85,238	(195,000)	(178,751)	(75,000)
ENDING BALANCE	298,944	103,944	120,193	45,193
TOTAL BUDGET	428,706	298,944	298,944	120,193

CAPITAL PROJECTS FUNDS

TOWN OF SAN ANSELMO
EQUIPMENT REPLACEMENT FUND
REVENUE AND EXPENDITURE SUMMARY
FISCAL YEAR 2022-2023

Description	2020-2021	2021-2022		2022-2023
	Actual	Rev Budget	Est. Actual	Budget
REVENUE				
Miscellaneous Revenue	-	-	-	-
Transfers In	215,000	-	-	-
TOTAL REVENUE AND TRANSFERS IN	215,000	-	-	-
EXPENDITURES				
Computer Hardware/Software	41,311	-	191	-
MERA Debt Service Payment	64,136	-	-	-
Public Works Capital Outlay	-	60,000	43,560	-
Parking Meters	13,435	-	-	-
Climate Action Plan Initiatives	-	-	-	-
Public Works Vehicle Replacement	10,880	-	-	75,000
Transfers Out	-	135,000	135,000	-
TOTAL EXPENDITURES	129,762	195,000	178,751	75,000

CAPITAL PROJECTS FUNDS

TOWN OF
SAN ANSELMO
EST. 1907

ITEM 1.1 - ATTACHMENT 1

MEASURE G DEBT SERVICE

In June 1995, the San Anselmo voters approved a $10.8 million general obligation bond measure, known as Measure G, to finance improvements to the Town's streets, storm drains, and Library building. This fund is dedicated to the collection of property tax assessments for the repayment of principal and interest on the bonds. As required by law, it was segregated from the Measure G Bond Proceeds Fund which was dedicated to receipt and expenditure of the $10.8 million bond funds. A separate fund was established for each issue. The Measure G bond proceeds are fully expended.

Series 1995

The first bond issue of $2.125 million was sold in August 1995. The first debt service payment was made in February 1996, and the second in August 1996. This debt service schedule is repeated for the remainder of the series payments. The debt service is being paid by a tax levied on the tax roll, beginning in the 1995-96 fiscal year. The tax rate levied per $100 of assessed valuation is as follows:

- 1995-96: 1.4 cents
- 1996-97: 1.2 cents
- 1997-98: 1.1 cents
- 1998-99: 1.2 cents
- 1999-00: 1.3 cents
- 2000-01: 1.1 cents
- 2001-02: 1.1 cents
- 2002-03: 1.1 cents
- 2003-04: 0.6 cents
- 2004-05: 0.9 cents
- 2005-06: 0.8 cents
- 2006-07: 0.8 cents
- 2007-08: 0.6 cents
- 2008-09: 0.7 cents
- 2009-10: 0.6 cents
- 2010-11: 0.8 cents
- 2011-12: (Refunded in conjunction with 1997 and 2000 issues)

Any tax proceeds remaining in excess of debt service payments, as well as interest revenue on funds in the debt service fund, are designated as a reserve for future year payments.

DEBT SERVICE FUNDS

MEASURE G DEBT SERVICE

Series 1997

A $3.55 million general obligation bond issue was sold in July 1997. The tax rate levied per $100 of assessed valuation is as follows:

- 1997-98: 1.7 cents
- 1998-99: 1.9 cents
- 1999-00: 2.0 cents
- •2000-01: 1.8 cents
- 2001-02: 1.8 cents
- 2002-03: 1.8 cents
- 2003-04: 0.7 cents
- 2004-05: 1.4 cents
- 2005-06: 1.2 cents
- 2006-07: 1.2 cents
- 2007-08: 1.1 cents
- 2008-09: 1.0 cents
- 2009-10: 1.0 cents
- 2010-11: 1.2 cents
- 2011-12: (Refunded in conjunction with 1995 and 2000 issues)

Series 2000

A third bond issue of $2.56 million was sold in August 2000. The tax rate levied per $100 of assessed valuation is as follows:

- 2001-02: 1.2 cents
- 2002-03: 1.2 cents
- 2003-04: 0.8 cents
- 2004-05: 1.0 cents
- 2005-06: 0.9 cents
- 2006-07: 0.8 cents
- 2007-08: 0.8 cents
- 2008-09: 0.7 cents
- 2009-10: 0.7 cents
- 2010-11: 0.8 cents
- 2011-12: (Refunded in conjunction with 1995 and 1997 issues)

Series 2003

The final bond issue of $2.565 million was in March 2003. The tax rate levied per $100 of assessed valuation is as follows:

- 2003-04: 1.1 cents
- 2004-05: 0.8 cents
- 2005-06: 0.7 cents
- 2006-07: 0.8 cents
- 2007-08: 0.6 cents
- 2008-09: 0.6 cents
- 2009-10: 0.6 cents
- 2010-11: 0.7 cents
- 2011-12: 0.7 cents
- 2012-13: 0.7 cents
- 2013-14: 0.7 cents
- 2014-15: 0.6 cents
- 2015-16: 0.6 cents
- 2016-17: 0.6 cents
- 2017-18: 0.5 cents
- 2018-19: 0.6 cents
- 2019-20: 0.5 cents
- 2020-21: 0.5 cents
- 2021-22: (Refunded by 2020 Series)

MEASURE G DEBT SERVICE

Series 2011 (Refunded Series 1995, 1997 and 2000)

- 2011-12: 2.4 cents
- 2012-13: 2.3 cents
- 2013-14: 2.3 cents
- 2014-15: 2.2 cents
- 2015-16: 2.2 cents
- 2016-17: 1.9 cents
- 2017-18: 1.9 cents
- 2018-19: 1.8 cents
- 2019-20: 1.8 cents
- 2020-21: 1.2 cents
- 2021-22: 1.1 cents
- 2022-23: 0.5 cents

Series 2020 (Refunded Series 2003)

- 2021-22: 0.4 cents
- 2022-23: 0.4 cents'

The total estimated Measure G Debt Service in 2021-22 is estimated at 0.9 cents per $100 of assessed valuation.

Fund Balance

The revenue in this fund is collected as part of the property tax bill. The Town receives this revenue in December and April. The Debt Service payments are due in August and February.

Due to the timing difference, it is necessary to maintain a fund balance sufficient to make the August payment of the succeeding fiscal year.

DEBT SERVICE FUNDS

TOWN OF SAN ANSELMO
MEASURE G DEBT SERVICE FUNDS
FISCAL YEAR 2022-2023

	2020-2021	2021-2022		2022-2023
	Actual	Rev Budget	Est. Actual	Budget
BEGINNING BALANCE	953,223	2,221,145	2,221,145	2,114,947
REVENUE				
Revenue	2,226,814	567,158	567,158	567,158
TOTAL REVENUE	2,226,814	567,158	567,158	567,158
TOTAL RESOURCES	3,180,037	2,788,303	2,788,303	2,682,105
EXPENDITURES				
TOTAL EXPENDITURES	958,892	673,356	673,356	689,756
Net Increase/(Decrease)	1,267,922	(106,198)	(106,198)	(122,598)
ENDING BALANCE	2,221,145	2,114,947	2,114,947	1,992,349
TOTAL BUDGET	3,180,037	2,788,303	2,788,303	2,682,105

DEBT SERVICE FUNDS

TOWN OF SAN ANSELMO
MEASURE G DEBT SERVICE FUNDS
REVENUE AND EXPENDITURE SUMMARY
FISCAL YEAR 2022-2023

	2020-2021	2021-2022		2022-2023
	Actual	Rev Budget	Est. Actual	Budget
REVENUE				
Measure G	691,499	565,158	565,158	565,158
Interest	1,544	2,000	2,000	2,000
Bond Proceed	1,533,771	-	-	-
TOTAL REVENUE	2,226,814	567,158	567,158	567,158
EXPENDITURES				
Debt Service: Principal	775,000	570,000	570,000	610,000
Debt Service: Interest	103,867	101,856	101,856	78,256
Bond Administrative Fees	750	1,500	1,500	1,500
Refunding Escrow Deposi	-	-	-	-
Cost of Issuance	79,275	-	-	-
TOTAL EXPENDITURES	958,892	673,356	673,356	689,756

DEBT SERVICE FUNDS

TOWN OF
SAN ANSELMO
EST. 1907

ITEM 1.1 - ATTACHMENT 1

MUNICIPAL LEASE FUND

On February 1, 2008, the Town entered into an agreement with Municipal Asset Management, Inc. (Corporation), to finance the restoration, remodeling and expansion of the downtown Fire Station, Station 19.

The financing was accomplished by the Corporation entering into a lease with the Town and the corporation leasing back the property under a Lease/Purchase Agreement, under which the Town is obligated to make rental payments to the Corporation.

The term of the lease is fifteen (15) years and the amount financed is $1,701,094. The annual debt service payment is $158,517. This payment is funded with general operating funds.

DEBT SERVICE FUNDS

TOWN OF SAN ANSELMO
MUNICIPAL LEASE FUND
FISCAL YEAR 2022-2023

Description	2020-2021	2021-2022		2022-2023
	Actual	Rev Budget	Est. Actual	Budget
BEGINNING BALANCE	1	-	-	-
REVENUE				
Transfers In	158,517	158,518	158,518	158,517
TOTAL REVENUE & TRANSFERS IN	158,517	158,518	158,518	158,517
TOTAL RESOURCES	158,518	158,518	158,518	158,517
EXPENDITURES				
TOTAL EXPENDITURES & TRANSFERS C	158,518	158,518	158,518	158,517
Net Increase/(Decrease)	(1)	-	-	-
ENDING BALANCE	-	-	-	-
TOTAL BUDGET	158,518	158,518	158,518	158,517

DEBT SERVICE FUNDS

TOWN OF SAN ANSELMO
MUNICIPAL LEASE FUND
REVENUE AND EXPENDITURE SUMMARY
FISCAL YEAR 2022-2023

	2020-2021	2021-2022		2022-2023
	Actual	Rev Budget	Est. Actual	Budget
REVENUE AND TRANSFERS I				
Transfers In	158,517	158,518	158,518	158,517
TOTAL REVENUE	158,517	158,518	158,518	158,517
EXPENDITURES				
Lease Payment: Principal	139,759	146,312	146,312	153,172
Lease Payment: Interest	18,759	12,206	12,206	5,345
TOTAL EXPENDITURES	158,518	158,518	158,518	158,517

DEBT SERVICE FUNDS

TOWN OF
SAN ANSELMO
EST. 1907

ITEM 1.1 - ATTACHMENT 1

INTERNAL SERVICE FUNDS

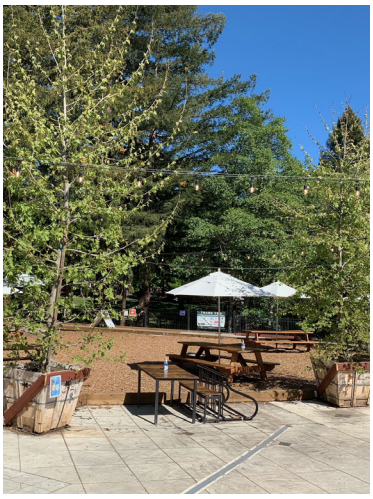

Insurance Fund 157

Building Maintenance Fund 161

Technologies Replacement Fund 165

Vehicle Replacement Fund 169

INTERNAL SERVICE FUNDS

TOWN OF
SAN ANSELMO
EST. 1907

ITEM 1.1 - ATTACHMENT 1

INSURANCE FUND

The Insurance Fund receives and expends funds related to the Town's liability and workers compensation self-insurance coverage.

Liability Insurance

On July 1, 1996, the Town became a member of the Bay Cities Joint Powers Insurance Authority (Bay Cities), a self-insurance pool that provides liability insurance coverage to twenty agencies in the Bay Area. Each member agency selects a self-insured retention limit. With the transition to Central Marin Police Authority for police services, the Town's self-insured retention has been reduced to $10,000 (from the previous amount of $100,000), below which the agency pays the claim costs. The insurance authority is responsible for costs above the limit, although it purchases excess insurance coverage for costs above $1 million, up to $20 million. A premium for coverage is charged based on the self-insured limit selected, the member agency's claim history and exposure, and the fiscal standing of the pool. Beginning in 1999-00, Bay Cities coverage includes personnel related liabilities.

Workers Compensation

Until June 30, 2003, the Town was a member of the Marin County Risk Management Authority (MCRMA), a self-insurance pool for workers compensation coverage. Called an "account pool," this self-insurance program maintained separate accounts for each pool member. Losses and expenses were paid from the member's pool account, up to the self-insured retention limit.

Effective July 1, 2003, the MCRMA group transferred to the Bay Cities Joint Powers Insurance Authority (Bay Cities), as the MCRMA Program Administrator retired. The Town's self-insured retention in the Bay Cities Workers Compensation pool is $150,000. Costs in excess of this limit are paid by the Authority, although it purchases excess insurance coverage from a commercial insurance agency.

Annually, Bay Cities evaluates the financial risk position of each member, and establishes an annual assessment based on outstanding claims and claim history.

2022-23 Highlights

A transfer of $500,000 has been made to the Insurance Fund from the General Fund to ensure an adequate claims reserve, as required by Bay Cities. The reserve for claims is now $101,291, within the limits set by Bay Cities.

INTERNAL SERVICE FUNDS

TOWN OF SAN ANSELMO
INSURANCE FUND
FISCAL YEAR 2022-2023

	2020-2021	2021-2022		2022-2023
	Actual	Rev Budget	Est. Actual	Budget
BEGINNING BALANCE	346,523	73,848	73,848	220,683
REVENUE				
Revenue	450,000	450,000	650,000	600,000
TOTAL REVENUE AND TRANSFERS IN	450,000	450,000	650,000	600,000
TOTAL RESOURCES	796,523	523,848	723,848	820,683
EXPENDITURES				
TOTAL EXPENDITURES	722,675	693,946	503,165	720,946
Net Increase/(Decrease)	(272,675)	(243,946)	146,835	(120,946)
ENDING BALANCE	73,848	(170,098)	220,683	99,737
TOTAL BUDGET	796,523	523,848	723,848	820,683

INTERNAL SERVICE FUNDS

TOWN OF SAN ANSELMO
INSURANCE FUND
REVENUE AND EXPENDITURE SUMMARY
FISCAL YEAR 2022-2023

	2020-2021	2021-2022		2022-2023
	Actual	Rev Budget	Est. Actual	Budget
REVENUE				
Internal Service Charges	-	-	-	600,000
Transfers In	450,000	450,000	600,000	-
TOTAL REVENUE	450,000	450,000	600,000	600,000
EXPENDITURES				
Employee Assist.Program Premiums	1,187	1,600	1,250	1,600
Flood Insur.Premiums	16,348	16,775	16,775	20,313
Liability Insur. Premiums	251,713	287,463	224,802	377,637
Liability Insur. Claims	1,329	34,272	30,000	32,000
Workers Comp.Insur.Premiums	138,630	140,836	123,588	157,146
Workers Comp. Insur. Claims	310,248	181,000	105,000	112,250
State Unempolyment Insurance	3,220	32,000	1,750	20,000
TOTAL EXPENDITURES	722,675	693,946	503,165	720,946

INTERNAL SERVICE FUNDS

TOWN OF
SAN ANSELMO
EST. 1907

ITEM 1.1 - ATTACHMENT 1

BUILDING MAINTENANCE FUND

The Building Maintenance Fund is to account for the costs of operation of the Town's maintenance and repair of the Town's building and accumulate funding for major improvements down the road.

Staff will continue to evaluate the fund and other operating activities that relate to building maintenance, such as custodial services, routine preventative maintenance, and repairs for municipal buildings and facilities, as well as restrooms and structures at Town parks. The goal is to develop a program that provide routine custodial services, preventative maintenance, and capital improvement at the Town facilities to ensure a clean, safe, well maintained, and accessible environment for use by the community and Town employees.

INTERNAL SERVICE FUNDS

TOWN OF SAN ANSELMO
BUILDING MAINTENANCE FUND
FISCAL YEAR 2022-2023

	2020-2021	2021-2022		2022-2023
	Actual	Rev Budget	Est. Actual	Budget
BEGINNING BALANCE	-	-	-	100,000
REVENUE				
Revenue	-	-	-	319,420
Transfers In	-	-	200,000	-
TOTAL REVENUE AND TRANSFERS I	-	-	200,000	319,420
TOTAL RESOURCES	-	-	200,000	419,420
EXPENDITURES				
TOTAL EXPENDITURES	-	150,000	100,000	300,000
Net Increase/(Decrease)	-	(150,000)	100,000	19,420
ENDING BALANCE	-	(150,000)	100,000	119,420
TOTAL BUDGET	-	-	200,000	419,420

INTERNAL SERVICE FUNDS

TOWN OF SAN ANSELMO
BUILDING MAINTENANCE FUND
REVENUE AND EXPENDITURE SUMMARY
FISCAL YEAR 2022-2023

Description	2020-2021	2021-2022		2022-2023
	Actual	Rev Budget	Est. Actual	Budget
REVENUE				
Internal Service Charge	-	-	-	319,420
Misc Revenue	-	-	-	-
Transfers In	-	-	200,000	-
TOTAL REVENUE	-	-	200,000	319,420
EXPENDITURES				
Public Works Capital Outlay	-	150,000	100,000	300,000
TOTAL EXPENDITURES	-	150,000	100,000	300,000

INTERNAL SERVICE FUNDS

TOWN OF
SAN ANSELMO
EST. 1907

ITEM 1.1 - ATTACHMENT 1

TECHNOLOGIES REPLACEMENT FUND

The Technologies Replacement Fund accounts for the costs of operating and maintaining the Town's network system, which includes computer hardware, telecommunication systems, connectivity to the internet, and software systems.

Costs are billed to the consuming departments at a rate that includes operation and maintenance, and an amount necessary to provide for replacement of computers or other technology needs. Activities of the fund also cover cybersecurity, technology disaster recovery, and various data retention needs. Staff will continue to evaluate the fund and other operating activities that relate to technology and move such activities and funding to the Technologies Replacement Fund in the future years.

INTERNAL SERVICE FUNDS

TOWN OF SAN ANSELMO
TECHNOLOGY REPLACEMENT FUND
FISCAL YEAR 2022-2023

Description	2020-2021	2021-2022		2022-2023
	Actual	Rev Budget	Est. Actual	Budget
BEGINNING BALANCE	-	-	-	140,000
REVENUE				
Revenue	-	190,000	190,000	271,700
TOTAL REVENUE AND TRS	-	190,000	190,000	271,700
TOTAL RESOURCES	-	190,000	190,000	411,700
EXPENDITURES				
TOTAL EXPENDITURES	-	150,000	50,000	400,000
Net Increase/(Decrease)	-	40,000	140,000	(128,300)
ENDING BALANCE	-	40,000	140,000	11,700
TOTAL BUDGET	-	190,000	190,000	411,700

INTERNAL SERVICE FUNDS

TOWN OF SAN ANSELMO
TECHNOLOGY REPLACEMENT FUND
REVENUE AND EXPENDITURE SUMMARY
FISCAL YEAR 2022-2023

Description	2020-2021	2021-2022		2022-2023
	Actual	Rev Budget	Est. Actual	Budget
REVENUE				
Internal Service Charge	-	-	-	231,700
Misc Revenue	-	-	-	50,000
Transfers In - Equipment Fund	-	90,000	90,000	-
Transfers In - GF	-	100,000	100,000	-
TOTAL REVENUE	-	190,000	190,000	281,700
EXPENDITURES				
Computer Hardware/Software	-	150,000	50,000	400,000
TOTAL EXPENDITURES	-	150,000	50,000	400,000

INTERNAL SERVICE FUNDS

TOWN OF
SAN ANSELMO
EST. 1907

ITEM 1.1 - ATTACHMENT 1

VEHICLE REPLACEMENT FUND

The Vehicle Replacement Fund accounts for the costs of operating and maintaining the Town's vehicle program.

During fiscal year 2020-21, the Town updated its vehicle inventory list and developed a replacement strategy. Historically, vehicle replacement, repair, or lease expenses have been budgeted in the Equipment Fund or run through Public Works Department operating cost. The Town proposes charging user departments $100,000 from the General Fund and $45,000 from the Equipment Fund to use for the FY2022-23 budget year. Any unused funding will stay within the fund and build up the reserve for future needs.

Staff will continue look for opportunities to use alternative fuel vehicles or other opportunities to reduce air pollution.

INTERNAL SERVICE FUNDS

TOWN OF SAN ANSELMO
VEHICLE REPLACEMENT FUND
FISCAL YEAR 2022-2023

Description	2020-2021	2021-2022		2022-2023
	Actual	Rev Budget	Est. Actual	Budget
BEGINNING BALANCE	-	-	-	95,000
REVENUE				
Revenue	-	145,000	145,000	100,000
TOTAL REVENUE AND TRANSFERS II	-	145,000	145,000	100,000
TOTAL RESOURCES	-	145,000	145,000	195,000
EXPENDITURES				
TOTAL EXPENDITURES	-	93,000	50,000	75,000
Net Increase/(Decrease)	-	52,000	95,000	25,000
ENDING BALANCE	-	52,000	95,000	120,000
TOTAL BUDGET	-	145,000	145,000	195,000

INTERNAL SERVICE FUNDS

TOWN OF SAN ANSELMO
VEHICLE REPLACEMENT FUND
REVENUE AND EXPENDITURE SUMMARY
FISCAL YEAR 2022-2023

	2020-2021	2021-2022		2022-2023
	Actual	Rev Budget	Est. Actual	Budget
REVENUE				
Internal Service Charge	-	-	-	-
Transfers In - Equipment Fund	-	45,000	45,000	-
Transfers In - GF	-	100,000	100,000	100,000
TOTAL REVENUE	-	145,000	145,000	100,000
EXPENDITURES				
Public Works Vehicle Replacement	-	93,000	50,000	75,000
TOTAL EXPENDITURES	-	93,000	50,000	75,000

INTERNAL SERVICE FUNDS

TOWN OF
SAN ANSELMO
EST. 1907

ITEM 1.1 - ATTACHMENT 1

APPENDIX A

TOWN OF SAN ANSELMO

DEPARTMENT OF PUBLIC WORKS

Capital Projects Budget Summary FY 2022-2023

DESCRIPTION			
Funding Source	**Funding Type**		**22-23 Funding**
Arterial Median Work (PW055)			**-**
Measure D Sales Tax	Measure D Sales Tax Fund		-
Bike Spine (PW053)			**-**
Federal OBAG2	Grant fund		-
Town Funding	Road Maintenance Fund		-
Bridge Avenue Bridge (PW052)			**-**
Measure D Sales Tax	Measure D Sales Tax Fund		-
Bridge Preventive Maintenance Program (PW037)			**60,000**
State of California	Grant fund		60,000
Measure D Sales Tax	Measure D Sales Tax Fund		-
Brookside School Sidewalk Gap Closure (PW042)			**-**
Transportation Authority of Marin (TAM)	Grant Fund		-
Measure D Sales Tax	Measure D Sales Tax Fund		-
Center Ave Bridge (PW025)			**100,000**
State of California	Grant fund		100,000
Measure D Sales Tax	Measure D Sales Tax Fund		-
HAWK Pedestrian Signal at Saunders Ave/SFD			**24,000**
State of California	Grant fund		24,000
Town Funding	Road Maintenance Fund		-
Hub Study (PW054)			**-**
State of California	Grant fund		-
Town Funding	Road Maintenance Fund		-
Madrone Ave Bridge (PW018)			**50,000**
State of California	Grant fund		50,000
Measure D Sales Tax	Measure D Sales Tax Fund		-
Nokomis Ave Bridge (PW017)			**50,000**
State of California	Grant fund		50,000

APPENDIX A

Capital Projects Budget Summary FY2021-22 (Continued)			
Miscellaneous ADA - NEW			**10,000**
Town Funding	Road Maintenance Fund		10,000
Project Design and Inspection - N/A			**100,000**
Measure D Sales Tax	Measure D Sales Tax Fund		100,000
Project Management - N/A			**405,328**
Measure D Sales Tax	Measure D Sales Tax Fund		189,018
Town Funding	Road Maintenance Fund		216,310
Robson ADA Bathroom (PW090)			**70,000**
Measure D Sales Tax	Measure D Sales Tax Fund		50,000
Town Funding	Robson House Fund		20,000
SFD Rehab - Hub to Bolinas Ave (PW051)			**-**
State of California	Grant fund		-
Town Funding	Road Maintenance Fund		-
Slurry & Crack Seal, Digouts - N/A			**300,000**
Measure D Sales Tax	Measure D Sales Tax Fund		300,000
Street Paving Phase A (PW105)			**866,446**
State of California	Grant fund		410,744
Measure D Sales Tax	Measure D Sales Tax Fund		455,702
Street Paving Phase B (PW106)			**683,554**
Town Funding	Road Maintenance Fund		683,554
Unprogrammed Resurfacing - N/A			**100,000**
Town Funding	Road Maintenance Fund		100,000
Unprogramed Drainage/Flood Control (N/A)			**100,000**
Measure D Sales Tax	Measure D Sales Tax Fund		100,000
Grand Total			**2,919,328**
Grant Fund			694,744
Measure D Sales Tax			1,194,720
Road Maintenance Fund			1,009,864
Robson House Fund			20,000

APPENDIX B

TOWN OF SAN ANSELMO

SALARY SCHEDULE - July 1, 2022

Classification Title	Low	High
Accounting-Benefits Technician	76,456	92,959
Administrative Services Assistant I	55,515	67,440
Administrative Services Assistant II	60,405	73,422
Administrative/Permit Services Technician	68,732	83,541
Assistant Civil Engineer	83,316	101,273
Assistant Planner	77,761	94,527
Associate Planner	85,560	103,982
Assistant Public Works Director	120,998	148,561
Building Inspector	88,996	108,183
Building Official	120,998	148,561
Child Care Instructor	42,084	51,138
Community Services Director	120,998	148,561
Finance & Administrative Services Director	144,912	177,918
Lead Library Assistant	55,928	67,992
Librarian I	66,851	81,272
Librarian II	74,864	90,978
Library Assistant	52,016	63,214
Library Technician	59,277	72,080
Maintenance Supervisor	79,604	96,759
Maintenance Worker I	55,841	67,892
Maintenance Worker II	61,484	74,726
Planning Director	138,241	169,729
Planning Technician	70,538	85,749
Project Coordinator	77,761	94,527
Public Works Director	156,211	191,787
Recreation Coordinator I	55,477	67,440
Recreation Coordinator II	60,405	73,422
Recreation Program Leader	46,285	56,254
Recreation Supervisor	72,519	88,169
Senior Accountant / Financial Supervisor	93,284	114,528
Senior Civil Engineer	104,609	128,435
Senior Maintenance Worker	66,349	80,657
Senior Planner	94,125	114,402
Town Clerk/Municipal Information Officer	93,284	114,528
Town Librarian	120,998	148,561
Town Manager		223,651

APPENDIX C

TOWN OF SAN ANSELMO

SALARIES AND BENEFITS SUMMARY

	Fiscal Year 2020-21		Fiscal Year 2021		Fiscal Year 2022-23	
FUNCTIONS	**Salaries & Wages**	**Employee Benefits**	**Salaries & Wages**	**Employee Benefits**	**Salaries & Wages**	**Employee Benefits**
General Government	653,987	196,497	815,070	285,255	772,915	182,346
Planning	214,539	75,267	270,555	110,665	284,131	110,378
Public Safety						
Fire Protection	n/a	n/a	n/a	n/a	n/a	n/a
Police Protection	n/a	n/a	n/a	n/a	n/a	n/a
Public Works						
Engineering	817,380	271,813	1,007,276	355,646	1,227,416	318,506
Streets	148,580	61,547	305,545	126,293	363,288	144,536
Parks	161,004	92,377	168,935	97,495	203,211	110,240
Library	421,390	178,517	575,895	239,027	606,481	241,080
Community Services						
Administration	379,271	125,931	436,734	143,698	468,274	158,169
Childcare	293,176	109,779	344,174	115,423	379,083	100,667
Sports	13,998	1,022	36,000	2,754	36,000	2,754
Total	3,103,323	1,112,751	3,960,184	1,476,256	4,340,799	1,368,674
OPEB - Retiree Medical Expense not allocated to Departments						
Retiree Medical Premium Paid		90,225		95,814		91,773
Contributions to OPEB Funding Trust		49,397		48,508		47,192
Total OPEB Expense		139,622		144,322		138,965
Pension Liabilities not allocated to Departments						
Unfunded Pension Liabilities		573,838		688,101		0
Pension Obligation Bonds Payments		225,018		233,208		528,976
Contributions to Pension Trust		19,745		22,888		22,888
Total Lump Sum Pension Costs		798,856		921,309		528,976
Workers Compensation not allocated to Departments		302,801		321,836		248,197
(1) Benefit Include:						
CalPERS Pension Contributions		277,828		344,461		325,569
Medical, Dental, Vision, Life Premiums		554,789		668,175		747,126
Medicare/Social Security Taxes		226,274		347,141		235,774
Other (2)		53,859		116,480		116,480
Total Benefit		1,112,751		1,476,256		1,424,949
(2) Car Allowance, Cashback, and Leave buy-back						

TOWN OF SAN ANSELMO

RESOLUTION NO. _____

A RESOLUTION OF THE SAN ANSELMO TOWN COUNCIL ADOPTING THE 2022-2023 BUDGET AND WORKPLAN

WHEREAS, the San Anselmo Town Council held a public hearing on the Proposed 2022-2023 Budget and Workplan on June 14, 2022; and

WHEREAS, the Council has determined that the 2022-2023 Proposed Budget and Workplan will allow for the continuation of basic municipal services and the necessary construction of capital improvements;

NOW, THEREFORE, BE IT HEREBY RESOLVED that the San Anselmo Town Council adopts the 2022-2023 Budgeted Expenditures and Transfers Out as allocated below:

Major Funds	
General Fund	$19,656,346
Measure D Sales Tax Fund	1,284,720
Emergency Reserve Fund	850,000
Downtown Revitalization Fund	3,678
Grants Fund	717,744
Recreation Fund	1,877,632
Special Revenue Funds	
Community Services Master Plan Fund	4,000
Road Maintenance Fund	1,214,864
State Gasoline Tax	638,946
Library Tax Fund	346,825
Robson House Fund	57,263
Special Events	44,040
Measure A Parks Tax Fund	796,572
Isabel Cook Center	112,196
Measure C Wildfire Tax Fund	365,000
Climate Action Fund	80,000
Creekside Common Fund	136,433
Capital Project Funds	
Capital Reconstruction Fund	50,000
Equipment Replacement Fund	75,000
Debt Service Funds	
Measure G Debt Service Fund	689,756
Municipal Lease Fund	158,517
Internal Service Funds	
Insurance Fund	720,946
Building Maintenance Fund	300,000
Technologies Replacement Fund	400,000
Vehicle Replacement Fund	75,000
Total	**$30,665,478**

I hereby certify that the foregoing resolution was passed and adopted by the San Anselmo Town Council at a regular meeting thereof, held on the 28th day of June 2022 by the following vote, to wit:

AYES:
NOES:
ABSENT:
ABSTAIN:

_____
Alexis Fineman, Mayor

ATTEST:

_____
Carla Kacmar, Town Clerk

525 San Anselmo Avenue
San Anselmo, CA 94960

Town of San Anselmo

Staff Report

TO: Town Council | 6/28/2022 | **Item #:** 1.2.

FROM:
Jeff Zuba, Finance & Administrative Services Director

SUBJECT:
Marin IT Agreements

RECOMMENDATION

That Council authorize the Town Manager to sign the agreements with Marin IT for Information Technology services.

BACKGROUND AND DISCUSSION

The Town of San Anselmo has five departments with 33 full-time employees. The Town currently has no full-time staff dedicated to information technology (IT), nor does it have staff trained specifically in IT or network administration. Following Carla Kacmar's resignation, IT management has been handled through the Finance & Administrative Services Director's office with tasks that include project and service management, coordination with departments, and contract oversight.

The Town procures IT services through Marin IT, a third-party contractor. These services include: client help desk support, desktop technician support, local network administration, system administration, applications maintenance, and specific project development and support.

Marin IT has been providing the Town with IT services for over fifteen years. There are limited options locally that provide the same level of support as Marin IT. The current agreement with Marin IT was established in 2017 and has expired. The Town has been operating on a month-to-month arrangement as staff sorted out the details of the agreements with Marin IT.

Staff has explored options to share IT services with other municipalities, but the opportunities were not a good fit. Staff also believes that hiring an IT Manager would likely exceed the cost of the agreements annually and the Town would only have one individual for IT support compared to the team that Marin IT offers.

FISCAL IMPACT

The Finance & Administrative Director's office would continue to oversee and manage the Marin IT contract and serve as Town liaison to the consultant and assist other departments with their IT needs. The Town budget for FY 2022-2023 included funds for Information Technology outsourcing needs which include continuing the weekly 12-hour on-site technical support, the managed monitoring suite, and IT Management Support for

special projects with a focus on cyber security. There is grant funding available from the Department of Homeland Security for the IT Management Support to address cybersecurity risks and cybersecurity threats to information systems. That grant application period will open in the 3rd quarter of 2022.

The agreements for the 12-hour Managed IT Support and Managed Software and Services are for three years. The agreement for IT Management Support is for one year and is intended to provide support for special projects to upgrade our hardware and secure our systems.

Contract Budget Details:

On-site/Remote Technical Support (12 hours per week)	$68,640
Managed Software Services Suite	54,600
Contingency	10,000
Annual Total	$133,240
IT Management Support for fiscal year 2022-23 only	$60,320

CEQA AND CLIMATE ACTION PLAN CONSISTENCY

The Council's discussion of this item is not a "project" under the California Environmental Quality Act, because it does not involve an activity which has the potential to cause a direct or reasonably foreseeable indirect physical change in the environment. (Cal. Pub. Res. Code § 21065).

CONCLUSION

Staff recommends Council authorize the Town Manager to sign the agreements with Marin IT.

Marin IT

Town of San Anselmo - Managed IT Support - 12 Hours Weekly

Quote #2022-002581 v1

Prepared For:
Town of San Anselmo
Jeff Zuba
525 San Anselmo Avenue
San Anselmo, CA 94960
P: (415) 258-4600
E: jzuba@townofsananselmo.org

Prepared by:
Marin IT
Rhett Redelings
P: (415) 842-3244
E: rhett@marinit.com

Date Issued:
06.10.2022
Expires:
07.12.2022

Onsite Support Services

Onsite IT Support Scope of Work includes the following:

As part of this agreement it is our understanding that we will be responsible for any support required for the Town of San Anselmo to continue daily operations, including but not limited to:

- Desktop / User support
- Real-time monitoring with our Remote Management software on 107 workstations / servers, as well as 20 network devices
- Inventory reporting of all in-production, network connected hardware assets, with hardware life cycle management.
- Service migration to new virtual servers using Town owned hardware and software licenses
- Maintenance of workstation and servers (OS patches, group policies, permissions, remedial actions)
- Local user account maintenance, permissions and access to local resources
- Hardware maintenance for workstations, servers and network equipment – Not including equipment, or replacement parts
- MS 365 support
- VPN client support
- Print and scanner support
- Assistance with installation of new equipment / applications
- Monitor backup systems – Suggest corrective measures if system not functioning correctly
- Local windows domain maintenance including local name resolution, server troubleshooting, and assistance of local security policies
- Coordinated support with phone system vendor
- Network support and design
- Core Data Center Services including installation of new switches, routers, firewalls, VPN concentrators and security equipment.

Marin IT technicians are expected to work with the Town of San Anselmo in supporting the network. Marin IT will provide ticketing system to track help requests and a 24 hour contact number to support after hour requests / emergencies. In the event that issues arise which are outside of the scope of this proposal Marin IT will discuss any fee impact with the designated Town of San Anselmo representative prior to proceeding with the work.

Contractor Responsibilities

- Contractor's technicians are expected to work with the Tow of San Anselmo staff in supporting the cities technology environment.
- Open ticket / service request and provide notification to Tow staff upon discovery of any system issues including steps being taken to remedy situation as well as regular status updates during resolution.
- In the event that issues arise which are outside of the scope of this proposal, Marin IT will discuss any fee impact with the designated Tow representative prior to proceeding with the work.
- Contractor will provide a ticketing system to log and track all service requests
- In the event of after hour service Town staff or other contractors may be required to troubleshoot and assist with correcting any issues which may arise.

Marin IT

Onsite Support Services

- Contractor will provide a 24 contact number to reach technicians in the event of system failure after hours. Once a page is received, a technician will return the call as soon as possible, and no later than 60 minutes after page is received. At this time a severity will be assigned to the issue and the service will be provided per the table below.

Severity Level	Definition	Initial Response Time and Channel
Critical Priority 1	Town of San Anselmo services are inoperative, customer's business operations or productivity are severely impacted with no available workaround, or a critical security issue exists.	1 hour *(phone)*
High Priority 2	Service is operating but issue is causing significant disruption of customer's business operations; workaround is unavailable or inadequate.	2 Hours *(phone or email)*
Medium Priority 3	Service is operating and issue's impact on the customer's business operations is moderate to low; a workaround or alternative is available.	1 Business Day *(phone or email)*
Standard	Issue is a minor inconvenience and does not impact business operations in any significant way; little or no time sensitivity.	1 Business Day *(phone or email)*

Customer Responsibilities

- All client and server software licenses associated with this agreement will be obtained by the end user.
- All manufacturer maintenance agreements (software and hardware) will be kept current and up to date and agrees that Marin IT will not support hardware or software that has been declared End of Life or is no longer supported by the manufacturer. (Example - Cisco Smartnet)
- Customer is responsible for communicating needs & changes thru the designated representative / channels only. Support requests can be sent to support@marinit.com
- Town of San Anselmo is responsible for providing all computing devices, laptops, MDC, smart phones, PDA's, workstations, etc
- Town of San Anselmo will be responsible for communicating needs & changes thru the designated representative / channels only.
- Town of San Anselmo is responsible for providing reasonable/timely access to all buildings, offices, devices, laptops, MDC, smart phones, tablets, etc.

Anticipated Costs - Please see "Total Monthly Services" for anticipated costs

Change / System Upgrade Process:

- Discuss the need for the change in scope
- Identify the additional tasks, which need to be performed in order to complete the change in scope.
- Estimate the cost associated with the additional scope, and determine the impact on network operation.
- This agreement includes supporting IP connectivity to all Town of San Anselmo locations to support facilities operations.

Marin IT

Onsite Support Services

Pricing/Rate Schedule/Invoicing:

This proposal is meant to provide support for the contracted number of hours for Town of San Anselmo but does not include overtime or special projects. Any hours worked in addition to the contracted number of hours or additional projects will be chargeable at the rates described below. This agreement does not include new hardware or software purchases/upgrades. Costs for hardware or software needed to perform upgrades and/or replacements is not included and can be provided by Marin IT for additional cost.

Our total charges, including monthly fees, subscriptions, and misc budgetary placeholders are detailed in the "Monthly Services" section. Hours for support services in excess of the regularly scheduled hours will be invoiced Marin IT's standard rate of $145. This rate, along, with all other quoted rates are for work during normal business hours (Monday through Friday between 8:00 AM and 6:00 PM). Rates for overtime, nights, weekends or holidays will be billed at 1 ½ times the regular rate. Rates for special projects (not covered under the scope of this agreement) will be at Marin IT's standard rates for the specific type of project, which range from $145 to $250 per hour. Unless it is a public safety emergency police and/or fire), Marin IT does not provide service on the following days: January 1st, Memorial Day, 4th of July, Thanksgiving Day, Christmas Eve after 2pm.

Termination of Agreement:

- **Managed Services: Based on annual commitment may be terminated with 30 days' notice before anniversary date**
  - **Services:After the first 6 months of the initial term, either party may terminate this Agreement without cause upon thirty (30) days written notice mailed or personally delivered to the other party.**
  - **Cause.Either party may terminate this Agreement for cause upon fifteen (15) days written notice mailed or personally delivered to the other party, and the notified party's failure to cure or correct the cause of the termination, to the reasonable satisfaction of the party giving such notice, within such fifteen (15) day time period.**
  - **Effect of Termination.Upon receipt of notice of termination, neither party shall incur additional obligations under any provision of this Agreement without the prior written consent of the other.**

Total Monthly Services

Product Details	Qty	Recurring Monthly	Ext. Recurring
Monthly Recurring Support			
Monthly recurring onsite IT Service/Support (12 hours per week) This Monthly cost includes 12 hours of regular on-site service each week during the term of the agreement at a discounted legacy rate with overtime charged at the standard T&M rates starting at $145.00 per hour .	12	$5,720.00	$68,640.00
		Monthly Subtotal:	**$68,640.00**

Marin IT

Contingency

Description	Price	Qty	Ext. Price
Budgetary Contingency Marin IT recommends a $10,000.00 contingency for unplanned hardware / software purchases and any labor costs in excess of the projected 12 hours per week, in addition to a mid-year check in, to collaboratively evaluate progress on customer goals, budget to actual expenditures, effectiveness of our services and general health of the customer's information technology environment.	$10,000.00	1	$10,000.00
		Subtotal:	**$10,000.00**

Quote Summary	Amount
Total Monthly Expenditure	$5,720.00
Contingency	$10,000.00
Total:	**$15,720.00**

Recurring Expenses Summary	Amount
Managed IT Support Services	$68,640.00
Annual Recurring Total:	**$68,640.00**

Prices: Quoted product pricing is valid for thirty (30) days assuming product availability, and does not include applicable taxes and freight. Buyer agrees to pay reasonable shipping charges and all applicable taxes (excluding income taxes). Services include only those items specified in the quotation. Additional services may be provided at Marin IT's then standard billing rates.

Payment: Payment shall be made within 30 days of the date of invoice. If any invoice is not paid when due, interest will be added to and payable on all overdue amounts at 18 percent per year, or the maximum percentage allowed under applicable laws, whichever is less. Buyer shall pay all costs of collection, including without limitation, reasonable attorney fees.

Warranties: Product warranties, if any, are provided by the manufacturer or publisher of the products. MARIN IT, INC. MAKES NO WARRANTIES, EITHER EXPRESS, IMPLIED, OR STATUTORY, INCLUDING BUT NOT LIMITED TO, THE IMPLIED WARANTY OF FITNESS FOR A PARTICULAR PURPOSE, WHATSOEVER. ALL SERVICES AND DELIVERABLES ARE PROVIDED ON AN "AS IS" BASIS.

Limitation of Liability: CUSTOMER AGREES THAT THE LIABILITY OF MARIN IT FOR DIRECT DAMAGES RELATED TO ANY PRODUCT OR SERVICE ARISING UNDER THESE TERMS AND CONDITIONS, WHETHER IN CONTRACT, TORT, OR OTHERWISE, WILL NOT EXCEED THE NET AMOUNT PAID TO MARIN ITBY CUSTOMER FOR THAT PRODUCT OR SERVICE WHICH IS THE SUBJECT OF THE CLAIM. MARIN ITSHALL IN NO EVENT BE LIABLE FOR ANY INCIDENTAL, SPECIAL, OR CONSEQUENTIAL DAMAGES OF ANY NATURE, EVEN IF MARIN IT HAS BEEN ADVISED OF THE POSSIBILITY OF SUCH DAMAGES. NEITHER PARTY
MAKES ANY REPRESENTATION OR WARRANTY AS TO ANY THIRD PARTY INFORMATION OR PRODUCTS PROVIDED TO EACH OTHER, ALL OF WHICH ARE PROVIDED, SOLD OR LICENSED "AS IS," AND THE PARTIES AGREE TO LOOK SOLELY TO THE WARRANTIES AND REMEDIES, IF ANY, PROVIDED BY THE THIRD PARTY.

Acceptance

Marin IT	**Town of San Anselmo**
Rhett Redelings	Jeff Zuba
Signature / Name	Signature / Name Initials
06/10/2022	
Date	Date

Marin IT

Town of San Anselmo - Managed Software and Services

Quote #2022-002572 v1

Prepared For:
Town of San Anselmo
Jeff Zuba
525 San Anselmo Avenue
San Anselmo, CA 94960
P: (415) 258-4600
E: jzuba@townofsananselmo.org

Prepared by:
Marin IT
Rhett Redelings
P: (415) 842-3244
E: rhett@marinit.com

Date Issued:
06.10.2022
Expires:
07.12.2022

Total Monthly Services

Product Details	Months	Recurring Monthly	Ext. Recurring
Monthly Recurring Services			
Automate Remote Management/Monitoring for Windows Workstation and Server/Apple OS with Webroot Business Endpoint Protection Monthly recurring for up to 60 endpoints - (53 workstations/PC's and 7 Servers) @ $27.50 each, $1,650.00 per month, or $19,800.00 for 12 months. **Connectwise Automate** includes automatic remediation for up to 100 events per month, standard T&M rates apply for every automatically resolved issue thereafter, billed at our minimum of 15 minutes for each resolved ticket. Includes the following monthly reports: • ScalePad End of Life Hardware Report (requires Connectwise Automate and Auvik monitoring) • Executive Summary • Software Inventory (as installed per workstation/server) • Automate-generated Ticket Summary • Connectwise Manage Service Requests • Antivirus Health • Network Device List • Performance Review • Remote Access Audit • Real-time workstation / server monitoring* **While real-time device monitoring may identify cyber security issues, or assist in forensic analysis in the event of a malware breach, Automate is not a cyber security product and should not be considered a comprehensive cyber security solution.* **Webroot SecureAnywhere® Business Endpoint Protection** protects against threats across numerous vectors, including: • email, • web browsing, • file attachments,	12	$1,650.00	$19,800.00

Marin IT

Total Monthly Services

Product Details	Months	Recurring Monthly	Ext. Recurring
• hyperlinks, • display ads, • social media apps, • connected devices (USB drives) and blended threats with the potential to deliver malicious payloads. SecureAnywhere Business Endpoint Protection is fully cloud-based, there are no definitions or signatures to deploy and manage. Malware detection occurs continuously in real time, so performance issues fade away. Scheduled systems scans are normally around 18 seconds and never impact device performance, even on virtual desktop and server environments, as well as embedded operating systems.			

Marin IT

Total Monthly Services

Product Details	Months	Recurring Monthly	Ext. Recurring
Office 365 Business with Proofpoint Email Security and Protection Managed Office 365 per Agreement **Office 365- Business Essentials** - 13 licences @ $8.50 each. • 50GB of mailbox storage per user, 150MB send limit per message • Office applications not included • Includes Microsoft Online Services: Exchange, OneDrive, SharePoint and Teams • Once license covers 5 phones, 5 tablets, and 5 workstations (Windows or Apple OS), per user **Office 365 - Business Premium with Spam Filter** - 49 licenses @ $15.50 each. • 50GB of mailbox storage per user, 150MB send limit per message • Includes Microsoft Office applications for desktop: Outlook, Word, Excel, PowerPoint, OneNote, and Publisher (PC only) • Includes Microsoft Online Services: Exchange, OneDrive for Business, SharePoint, Skype, and Teams • Web versions of Word, Excel, PowerPoint and Outlook • Each license covers use on 5 phones, 5 tablets, and 5 workstations (Windows or Apple OS), per user • File storage and sharing with 1TB of OneDrive for Bueiines storage • Unlimited online meetings and video conferencing for up to 250 people with Microsoft Teams **Vision Online Plan 2** - 2 licenses @ $15.00 each. Includes **Proofpoint Email Security and Protection**	12	$900.00	$10,800.00

Marin IT

Total Monthly Services

Product Details	Months	Recurring Monthly	Ext. Recurring
Hosted Backups Hosted Backups for 6 servers with a maximum of 10 terabytes (TB)*. *The Town of San Anselmo is currently using 51.09TB of storage, but only paying for 10TB of storage. Marin IT recommends the Town both budget for a right-sized backup service and explore the possibility of applying a retention policy to reduce the amount of data that requires storage and/or consider migrating from Tyler on-prem to Tyler's cloud ERP service. Should the Town choose to move forward with the current storage requirements, Marin IT recommends budgeting $400.00 per 10TB of storage, per month. At the current storage levels, Marin IT estimates a $2,000.00 monthly expenditure. Marin IT will budget for actual usage (+/-).	12	$2,000.00	$24,000.00
		Monthly Subtotal:	**$4,550.00**
		Subtotal:	**$54,600.00**

Marin IT

Hosted Backups

Administration of storage, VM environment, backups and disaster recovery Includes:

Hosted backups for up to 10 terabytes* including the following servers:

- SA-Server4 - 316GB
- SA-Server5 - 101.77GB
- SA-Server6 - 2.45TB
- SA-Server7 - 26.88GB
- SA-Server8 - 27.62GB
- SA-Finserv2 - 48.18TB

*The Town of San Anselmo is currently using 51.09TB of storage, but only paying for 10TB of storage, which violates the licensing agreement with the backup vendor. Marin IT recommends the Town both budget for a right-sized backup service and explore the possibility of applying a retention policy to reduce the amount of data that requires storage.

Should the Town choose to move forward with the current storage requirements, Marin IT recommends budgeting $400.00 per 10TB of storage, per month. At the current storage levels, Marin IT estimates a $2,000.00 monthly expenditure. Marin IT will budget for actual usage (+/-).

Quote Summary	Amount
Total Annual Expenditure	$54,600.00
Total:	**$54,600.00**

Monthly Expenses Summary	Amount
Total Monthly Services	$4,550.00
Monthly Total:	**$4,550.00**

Prices: Quoted product pricing is valid for thirty (30) days assuming product availability, and does not include applicable taxes and freight. Buyer agrees to pay reasonable shipping charges and all applicable taxes (excluding income taxes). Services include only those items specified in the quotation. Additional services may be provided at Marin IT's then standard billing rates.

Payment: Payment shall be made within 30 days of the date of invoice. If any invoice is not paid when due, interest will be added to and payable on all overdue amounts at 18 percent per year, or the maximum percentage allowed under applicable laws, whichever is less. Buyer shall pay all costs of collection, including without limitation, reasonable attorney fees.

Warranties: Product warranties, if any, are provided by the manufacturer or publisher of the products. MARIN IT, INC. MAKES NO WARRANTIES, EITHER EXPRESS, IMPLIED, OR STATUTORY, INCLUDING BUT NOT LIMITED TO, THE IMPLIED WARANTY OF FITNESS FOR A PARTICULAR PURPOSE, WHATSOEVER. ALL SERVICES AND DELIVERABLES ARE PROVIDED ON AN "AS IS" BASIS.

Limitation of Liability: CUSTOMER AGREES THAT THE LIABILITY OF MARIN IT FOR DIRECT DAMAGES RELATED TO ANY PRODUCT OR SERVICE ARISING UNDER THESE TERMS AND CONDITIONS, WHETHER IN CONTRACT, TORT, OR OTHERWISE, WILL NOT EXCEED THE NET AMOUNT PAID TO MARIN ITBY CUSTOMER FOR THAT PRODUCT OR SERVICE WHICH IS THE SUBJECT OF THE CLAIM. MARIN ITSHALL IN NO EVENT BE LIABLE FOR ANY INCIDENTAL, SPECIAL, OR CONSEQUENTIAL DAMAGES OF ANY NATURE, EVEN IF MARIN IT HAS BEEN ADVISED OF THE POSSIBILITY OF SUCH DAMAGES. NEITHER PARTY
MAKES ANY REPRESENTATION OR WARRANTY AS TO ANY THIRD PARTY INFORMATION OR PRODUCTS PROVIDED TO EACH OTHER, ALL OF WHICH ARE PROVIDED, SOLD OR LICENSED "AS IS," AND THE PARTIES AGREE TO LOOK SOLELY TO THE WARRANTIES AND REMEDIES, IF ANY, PROVIDED BY THE THIRD PARTY.

Marin IT

Acceptance

Marin IT	**Town of San Anselmo**
Rhett Redelings	Jeff Zuba
Signature / Name	Signature / Name Initials
06/10/2022	
Date	Date

Marin IT

IT Management Support

Quote #2022-002408 v1

Prepared For:
Town of San Anselmo
Carla Kacmar
525 San Anselmo Avenue
San Anselmo, CA 94960
P: (415) 258-4600
E: ckacmar@townofsananselmo.org

Prepared by:
Marin IT
David Cooper
P: 415-842-3250
E: coop@marinit.com

Date Issued:
05.13.2022
Expires:
06.10.2022

IT Management Support

IT Management Support Including:

IT Management Support

- Meet weekly with IT leadership to discuss priorities, take direction, propose solutions, and address emerging IT threats, challenges, and opportunities.
- Provide recommendations with clearly articulated advantages, disadvantages and potential repercussions.
- Meet Monthly with Town leadership to identify and prioritize key issues, share progress on special projects and get feedback about any issues.
- Review and recommend equipment specifications for new devices.
- Make recommendations for any changes service enhancements and future forecasting
- Alert Town staff to any cost overruns or budgetary concerns with regard to hardware, software or services provided by Marin IT or if identified from a third-party in the normal course of business.
- Provide real-time workstation, server, and network hardware inventory*
- Create annual network topology diagram (to comply industry specific requirements such as PCI, SOX and NIST cyber-security framework)*
- Maintain Software, SaaS (cloud) contracts, and warranty license status
- Provide IT staff with communications to send to employees
    - Cyber-security alerts and tips
    - Quarterly performance metrics and key accomplishments

Provide Service Delivery Oversight, including:

- Single point of contact for customer inquiries and concerns.
- Support ticket escalation
- Prioritization of service requests
- Provide and discuss monthly system performance review (Executive Summary, ticket summary and statistics, system health, remote access log, hardware and software end of life reports, customer satisfaction)
- Connectivity and bandwidth usage and performance statistics*
- Incident Response Coordination

Assist in the management of third-party vendors, including:

- Microsoft 365
- MIDAS
- AT&T (Service and Connectivity)
- Granicus
- Dell
- Cisco Systems

Marin IT

IT Management Support

- Packet Fusion
- Central Square
- TPx
- Tyler

Manage special projects as prioritized with IT leadership

- Asset Spreadsheet & Capital Improvement Plan (CIP) for technology assets
- Network Infrastructure End of Life Review
- Town Hall Wiring project which will include replacing and relocating Master Switch, Granicus Server relocation, PD Switch relocation, and adding a wireless AP in conference room.
- New Phone System which will include disaster recovery and cell phones.
- Cyber-security handbook with Marin Security and Policy Group
- Cyber-security awareness training program
- Cyber-security vulnerability remediation – Multi Factor Authentication, implement processes and tools to manage the reporting, analysis, and remediation of potential phishing e-mails, implement a password policy, implement geo-blocking for internet traffic.
- Creating a technology program for submitting tickets and procurement
- Laptop Upgrade project
- Electronic Document Management System and Transparency Portal
- CISA Risk and Vulnerability Audit assessment
- Domain .gov change
- Other special projects as time allows

Technology Strategy / Cyber-security Advisement
Manage cyber security awareness campaign (KnowB4, etc)
Assist in the development and documentation of IT governance and cyber security policies and processes

Business Continuity and Disaster Recovery Planning
Develop and maintain an IT runbook with the user account information, system architecture and routine procedures required to understand the Tow of San Anselmo's IT infrastructure and provide business continuity in the event of a personal or support change.
Assist with planning operations in the event of system failure

Documentation of network topology:
Wide area network (WAN)
Local area network (LAN)
Internet data flow / connectivity – MIDAS
**Requires the continued purchase of our Infrastructure and Endpoint Monitoring packages.*

Manufacturers support agreements
Contractor shall track maintenance agreements for agreed upon hardware components
Contractor will provide renewal quotations for any service agreement expiring within 30 days on a monthly basis.
Contractor will inform Tow staff as well as open and manage any required tickets with manufacturer and coordinate the delivery and installation of any required hardware replacements.
Customer is responsible for costs associated with keeping manufacturer's maintenance agreements current / in force.

Marin IT

IT Management Support

Problem Reporting / Resolution Procedures
Marin IT will provide ticketing system to track help requests and a 24 hour contact number to support after hour requests / emergencies.

Contractor Responsibilities
Contractor's technicians are expected to work with the Tow of San Anselmo staff in supporting the Town' technology environment.
Open ticket / service request and provide notification to Tow staff upon discovery of any system issues including steps being taken to remedy situation as well as regular status updates during resolution.
In the event that issues arise which are outside of the scope of this proposal, Marin IT will discuss any fee impact with the designated Tow representative prior to proceeding with the work.

Requires the purchase of our Endpoint and Infrastructure Monitoring Packages (Automate and Auvik).

Marin IT is offering this service at the rate of $145.00 per hour.

Anticipated Costs - Please see "Total Monthly Services" for anticipated costs

Total Monthly Services

Product Details	Months	Recurring Monthly	Ext. Recurring
Monthly Recurring Services			
IT Management Support **IT Management Support** Marin IT will provide eight (8) hours per week of IT management support, to assist the Town of San Anselmo with project management and strategic advisement, meeting with stakeholders for the duration of one year to assist in the completion of capital projects as identified by key staff.	12	$5,026.67	$60,320.04
		Monthly Subtotal:	**$60,320.04**
		Subtotal:	**$60,320.04**

Quote Summary	Amount
Total Annual Services	$60,320.04
Total:	**$60,320.04**

Monthly Expenses Summary	Amount
Total Monthly Services	$5,026.67
Monthly Total:	**$5,026.67**

Prices: Quoted product pricing is valid for thirty (30) days assuming product availability, and does not include applicable taxes and freight. Buyer agrees to pay reasonable shipping charges and all applicable taxes (excluding income taxes). Services include only those items specified in the quotation. Additional services

Marin IT

may be provided at Marin IT's then standard billing rates.

Payment: Payment shall be made within 30 days of the date of invoice. If any invoice is not paid when due, interest will be added to and payable on all overdue amounts at 18 percent per year, or the maximum percentage allowed under applicable laws, whichever is less. Buyer shall pay all costs of collection, including without limitation, reasonable attorney fees.

Warranties: Product warranties, if any, are provided by the manufacturer or publisher of the products. MARIN IT, INC. MAKES NO WARRANTIES, EITHER EXPRESS, IMPLIED, OR STATUTORY, INCLUDING BUT NOT LIMITED TO, THE IMPLIED WARRANTY OF FITNESS FOR A PARTICULAR PURPOSE, WHATSOEVER. ALL SERVICES AND DELIVERABLES ARE PROVIDED ON AN "AS IS" BASIS.

Limitation of Liability: CUSTOMER AGREES THAT THE LIABILITY OF MARIN IT FOR DIRECT DAMAGES RELATED TO ANY PRODUCT OR SERVICE ARISING UNDER THESE TERMS AND CONDITIONS, WHETHER IN CONTRACT, TORT, OR OTHERWISE, WILL NOT EXCEED THE NET AMOUNT PAID TO MARIN ITBY CUSTOMER FOR THAT PRODUCT OR SERVICE WHICH IS THE SUBJECT OF THE CLAIM. MARIN ITSHALL IN NO EVENT BE LIABLE FOR ANY INCIDENTAL, SPECIAL, OR CONSEQUENTIAL DAMAGES OF ANY NATURE, EVEN IF MARIN IT HAS BEEN ADVISED OF THE POSSIBILITY OF SUCH DAMAGES. NEITHER PARTY MAKES ANY REPRESENTATION OR WARRANTY AS TO ANY THIRD PARTY INFORMATION OR PRODUCTS PROVIDED TO EACH OTHER, ALL OF WHICH ARE PROVIDED, SOLD OR LICENSED "AS IS," AND THE PARTIES AGREE TO LOOK SOLELY TO THE WARRANTIES AND REMEDIES, IF ANY, PROVIDED
BY THE THIRD PARTY.

Acceptance

Marin IT	**Town of San Anselmo**
David Cooper	Carla Kacmar
Signature / Name	Signature / Name Initials
05/13/2022	
Date	Date

525 San Anselmo Avenue
San Anselmo, CA 94960

Town of San Anselmo

Staff Report

TO: Town Council 6/28/2022 **Item #:** 1.3.

FROM:
Sean Condry, P.E., Director of Public Works
Scott Schneider, P.E., Assistant Director of Public Works

SUBJECT:
Memorial Park Athletic Field Renovation Project

RECOMMENDATION

That Town Council take the following actions regarding the Memorial Park Athletic Field Renovation Project:

1. Approve the Plans, Specifications and Bid Book for the Memorial Park Athletic Field Renovation Project and authorize staff to advertise for bids; and
2. Authorize the Town Manager to award the construction contract to the lowest responsible bidder.

BACKGROUND

In 1924, the Town of San Anselmo acquired seven acres of land and built Recreation Park, which was later named Memorial Park. Baseball fields were installed, and in 1933 the American Legion and the Boy Scouts built the Log Cabin.

Over the years a playground, picnic areas, tennis courts, a community-based garden and most recently a skate park were added. Aside from the addition of the above listed amenities, the park has not received any significant renovations.

In 2018, the Town Council approved the Memorial Park Master Plan. The plan had been developed over an 18-month period and included a comprehensive community input process. In 2019, Measure M was placed on the ballot. Measure M called for a tax on each residential unit in San Anselmo for a term of 30 years. This tax would have funded the implementation of the master plan and provided ongoing maintenance funding for the park. Measure M was rejected by voters in November of 2019.

DISCUSSION

At the Council meeting on January 26, 2021 the Town Council authorized staff to go out to bid for the Memorial Park Athletic Field Renovation Project. On April 13, 2021 bids were opened and Marina Landscaping was the low bidder at $454,360. At the June 8, 2022 Council meeting, due to the ongoing drought, the Town Council voted to postpone the

project.

At the April 12, 2022, Town Council meeting, the Council authorized staff to prepare plans to replace the Memorial Park Athletic Field irrigation system and turf, to improve the existing wells, and to provide piping connections for a future large underground storage tank that may be used for well water, recycled water, gray water, and/or stormwater.

The attached Plans, Specifications and Bid Book for the Memorial Park Athletic Field Renovation Project were developed based on the Council's direction (Attachment 1). Staff is seeking the Council's approval of the Plans, Specification and Bid Book and authorization to advertise for bids. Following the public bidding process, staff is also requesting that the Council authorize the Town Manager to award the construction contract to the lowest responsible bidder.

FISCAL IMPACT

The Memorial Park Athletic Field Renovation Project engineer's estimate is $800,000 for the base bid, and includes additional field subdrains, asphalt paving of the path near the restroom, well supply pipes, and future storage connection pipes. Funding for the Field Renovation Project would come from County Sales Tax for Parks funds (Measure A), which total approximately $495,000, State Bond for Parks (Proposition 68) funds, which total $178,000, and $127,000 from Measure D.

GENERAL PLAN CONSISTENCY

The project is consistent with the overarching General Plan Land Use goals of preserving San Anselmo's small town character and close connection to natural beauty of its surroundings.

CEQA AND CLIMATE ACTION PLAN CONSISTENCY

The Town finds this project to be categorically exempt from the requirement for the preparation of environmental documents under the California Environmental Quality Act (CEQA) under CEQA Guidelines Section 15301 Class 1, because it involves repair of existing public facilities involving negligible or no expansion of use. (14 Cal. Code Regs. § 15301). None of the exemptions listed in CEQA Guidelines section 15300.2 apply in this instance. Specifically, the project is not located in a sensitive environment, as the athletic fields are currently used year-round. In addition, this is an isolated restoration project that will not result in cumulative impacts. Finally, there are no unusual circumstances or historical resources impacted by the project.

The Memorial Park Athletic Field Renovation Project will address San Anselmo's Climate Action Plan (CAP) 2030, specifically CAP Measure C-2, replace inefficient irrigation systems. The improvements to the walking and biking path will address CAP Measure T-2 (Bicycling) and T-3 (Walking).

CONCLUSION

Memorial Park will turn 100 years old in 2026 and is in much need of repair. The replacement of the athletic fields is badly needed. Along with improvements to the existing wells, and provisions for future water sources, the field can be renovated even though the drought continues.

The recently completed Skatepark Rehabilitation Project and phase one of the Millennium Playground repair work, along with the future parking lot repair project continue the long-needed Memorial Park repair process.

CONSTRUCTION DOCUMENTS
FOR

MEMORIAL PARK ATHLETIC FIELD RENOVATION

TOWN OF SAN ANSELMO
1000 Sir Francis Drake Boulevard
San Anselmo, CA 94960

CA: 1-800-227-2600
CALL BEFORE YOU DIG
USA
UNDERGROUND SERVICE ALERT
CA: 1-800-227-2600
CALL TWO WORKING DAYS BEFORE YOU DIG

ABBREVIATIONS

AC	ASPHALT CONCRETE
ADL.	ADDITIONAL
ADJ.	ADJUSTABLE
AGG.	AGGREGATE
ALT.	ALTERNATE
APPROX.	APPROXIMATE
ARCH.	ARCHITECT
ASPH.	ASPHALT
AUTO.	AUTOMATIC
BD.	BITUMINOUS
BLDG.	BUILDING
BOT.	BOTTOM
BTWN.	BETWEEN
C.B.	CATCH BASIN
CBC	CALIF. BUILDING CODE
C.I.	CAST IRON
C.I.P.	CAST IN PLACE+
CJ	CONTROL JOINT
CMU	CONCRETE MASONRY UNIT
CEM.	CEMENT
CL	CENTER LINE
CLR.	CLEAR
CLMN	COLUMN
CONC.	CONCRETE
CONN	CONNECTION
CONST.	CONSTRUCTION
SONT.	CONTINUOUS
CONTR.	CONTRACTOR
COORD.	COORDINATE
CTR.	CENTER
D.F.	DRINKING FOUNTAIN
DBL.	DOUBLE
DEMO.	DEMOLITION
DEPT.	DEPARTMENT
DET.	DETAIL
DI	DROP INLET
DIA.	DIAMETER
DIAG.	DIAGONAL
DIM.	DIMENSION
DN.	DOWN
DWG.	DRAWING
(E)	EXISTING
EXIST.	EXISTING
EJ	EXPANSION JOINT
E.S.	EACH SIDE
E.W.	EACH WAY
EA.	EACH
ELEV.	ELEVATION
ENCL.	ENCLOSURE
ENGR.	ENGINEER
EQ.	EQUAL
EQUIP.	EQUIPMENT
ETC.	ETCETERA
EXP.	EXPANSION
EXT.	EXTERIOR
FDN	FOUNDATION
FIN.	FINISH
FR.	FROM
FT.	FOOT
FUT.	FUTURE
GA	GAUGE
GALV.	GALVANIZED
GND.	GROUND
H.B.	HOSE BIBB
H.P.	HIGH POINT
HDR.	HEADER
HORIZ.	HORIZONTAL
HT.	HEIGHT
IE	INVERT ELEVATION
I.D.	INSIDE DIAMETER
IN.	INCH
INCL.	INCLUDE
INV.	INVERT

JT.	JOINT
LB.	POUND
MFR.	MANUFACTURER
MAT.	MATERIAL
MAX	MAXIMUM
MECH.	MECHANICAL
MED.	MEDIUM
MIN.	MINIMUM
MISC.	MISCELLANEOUS
MTG.	MOUNTING
MTL.	MATERIAL
(N)	NEW
N.I.C.	NOT IN CONTRACT
N.T.S.	NOT TO SCALE
NO.	NUMBER
NOM.	NOMINAL
O.C.	ON CENTER
O.D.	OUTSIDE DIAMETER
OPG.	OPENING
OPP.	OPPOSITE
PSI	POUNDS PER SQUARE INCH
PVC	POLYVINYL CLORIDE
PENN.	PENETRATION
PERF.	PERFORATED
PL	PROPERTY LINE
PLYWD.	PLYWOOD
PR.	PAIR
PRCST.	PRECAST
PREFAB.	PREFABRICATED
PT.WD.	PRESSURE TREATED WOOD
QTY.	QUANITY
RAD.	RADIUS
R.C.P.	REINFORCED CONCRETE PIPE
RDWD.	REDWOOD
RE	RIM ELEVATION
REF.	REFERENCE
REINF.	REINFORCING
REQD.	REQUIRED
REV.	REVISION
SD	STORM DRAIN
S.F.	SQUARE FOOT
S.J.	SCORE JOINT
S.M.	SHEET METAL
S.Y.	SQUARE YARD
SCH.	SCHEDULE
SHT.	SHEET
SIM	SIMILAR
SPAC.	SPACING
SPEC.	SPECIFICATION
SQ.	SQUARE
STA	STATION
STD	STANDARD
STL.	STEEL
STOR.	STORAGE
STRUCT.	STRUCTURAL
SYM.	SYMMETRICAL
SYS.	SYSTEM
T.C.	TOP OF CURB
T.O.	TOP OF
T.O.P.	TOP OF PAVING
T.O.W.	TOP OF WALL
TP	TOP OF PIPE
TEMP.	TEMPORARY
THK.	THICK
TYP.	TYPICAL
V.I.F.	VERIFY IN FIELD
VERT.	VERTICAL
W/	WITH
W.O.	WHERE OCCURS
W.P.	WATER PROOF
W.W.M.	WELDED WIRE MESH
W/O	WITHOUT
WT.	WEIGHT

GENERAL NOTES

1. CONTRACTOR SHALL BE RESPONSIBLE FOR ALL LAYOUT AND MEASUREMENTS AS NOTED IN THE DRAWINGS AND SPECIFICATIONS. THE CONTRACTOR SHALL BE RESPONSIBLE FOR ALL SURVEYING AND FIELD ENGINEERING NECESSARY TO ESTABLISH THE LINES AND GRADE STAKES.

2. BEFORE COMMENCING WORK UNDER THIS CONTRACT NOTIFY USA, UNDERGROUND SERVICE ALERT, AT 1-800-227-2600. THE CONTRACTOR SHALL DETERMINE THE EXACT LOCATION OF ALL EXISTING UTILITIES PIPES AND STRUCTURES BEFORE COMMENCING WORK AND AGREES TO BE FULLY RESPONSIBLE FOR ANY AND ALL DAMAGES WHICH MIGHT BE OCCASIONED BY THE CONTRACTOR'S FAILURE TO EXACTLY LOCATE AND PRESERVE SAID UTILITIES. EXISTING UTILITIES SHOWN FOR REFERENCE ONLY

3. CONTRACTOR SHALL NOT WILLFULLY PROCEED WITH CONSTRUCTION AS DESIGNED WHEN IT IS OBVIOUS THAT UNKNOWN OBSTRUCTIONS AND/OR GRADE DIFFERENCES EXIST THAT MAY NOT HAVE BEEN KNOWN DURING DESIGN. SUCH CONDITIONS SHALL BE IMMEDIATELY BROUGHT TO THE ATTENTION OF THE TOWN REPRESENTATIVE. THE CONTRACTOR SHALL ASSUME FULL RESPONSIBILITY FOR ALL NECESSARY REVISIONS DUE TO FAILURE TO GIVE SUCH NOTIFICATION.

4. THE CONTRACTOR SHALL EXAMINE THE SITE, COMPARE IT WITH THE DRAWINGS AND SPECIFICATIONS, CAREFULLY EXAMINE ALL OF THE CONTRACT TO BE PERFORMED BEFORE ENTERING INTO THIS CONTRACT. NO ALLOWANCE SHALL SUBSEQUENTLY BE MADE ON BEHALF OF THE CONTRACTOR ON ACCOUNT OF AN ERROR ON HIS PART OR HIS NEGLIGENCE OR FAILURE TO AQUAINT HIMSELF WITH THE CONDITIONS OF THE SITE.

5. THE CONTRACTOR SHALL FIELD VERIFY ALL JOB CONDITIONS AND DIMENSIONS SHOWN ON THE PLANS. ANY VARIATIONS THERE OF FROM THE DRAWINGS MUST BE REPORTED TO THE TOWN REPRESENTATIVE.

6. CONTRACTOR IS RESPONSIBLE FOR ALL TRAFFIC CONTROL IN ACCORDANCE WITH THE LATEST ADDITION OF CALIFORNIA MANUAL OF UNIFORM TRAFFIC CONTROL DEVICES (UMUTCD).

7. UPON COMPLETION OF FINAL PUNCH LIST ITEMS, RECORD PLANS, PREPARED BY THE CONTRACTOR SHALL BE PROVIDED TO SAN ANSELMO. PRIOR TO FINAL ACCEPTANCE, THE CONTRACTOR SHALL SIGN A STATEMENT OF COMPLIANCE, VERIFY THAT ALL MATERIALS AND EQUIPMENT ARE INSTALLED PER PLAN AND ARE IN GOOD OPERATING ORDER. REFER TO SPECIFICATIONS 10.14.06 FOR MAINTENANCE PERIOD REQUIREMENTS.

8. AN INVENTORY OF EXISTING IMPROVEMENTS SHALL BE SUBMITTED FOR ENTIRE PROJECT AREA. THIS IS TO DOCUMENT CONDITION OF EXISTING IMPROVEMENTS UPON THE CONTRACTOR'S ARRIVAL. INFORMATION SHALL INCLUDE: TREES, RETAINING WALLS, EXISTING CATCH BASINS, ROAD SIGNS, CURBING, UTILITY BOXES AND MANHOLES. IMPROVEMENTS RECORDED SHALL INCLUDE ALL CITY SIDEWALKS, SIGNS AND CURBING.

9. CONTRACTOR IS RESPONSIBLE FOR PROVIDING STORMWATER POLLUTION PREVENTION BMP'S AS REQUIRED BY THE STATE REGIONAL WATER QUALITY BOARD DURING CONSTRUCTION, INCLUDING NON-WORKING HOURS. CONTRACTOR SHALL HAVE ONSITE, MATERIALS NECESSARY TO PROVIDE STORMWATER RUNOFF PROTECTION DURING A STORM EVENT.

SIGNATURES

DIRECTOR OF PUBLIC WORKS DATE

PROJECT DIRECTORY

CLIENT
TOWN OF SAN ANSELMO
1000 SIR FRANCIS DRAKE BLVD.
SAN ANSELMO, CA 94960
CONTACT: SCOTT SCHNEIDER
PHONE: (415) 258--4653

LANDSCAPE ARCHITECT:
ABEY ARNOLD ASSOCIATES
1005 A STREET, SUITE 305
SAN RAFAEL, CA 94901
CONTACT: PETER ARNOLD
PHONE: (415) 258-9580
FAX: (415) 258-9780

SURVEYOR
STEPHEN J. FLATLAND
PO BOX 1837
SAN ANSELMO, CA 94960
CONTACT: STEPHEN FLATLAND
PHONE: (415) 457-5081

PROJECT SCOPE

DEMOLITION AND REMOVAL OF EXISTING NATURAL TURF, GRADING. INSTALLATION SUBSURFACE OF DRAIN LINES. INSTALLATION OF NEW IRRIGATION SYSTEM, REPAIR AND RE-GRADING OF BASEBALL INFIELDS.
INSTALLATION OF SOD TURF .

BUILDING CODE

2019 CBC

DRAWING LIST

NO.	SHEET	SHEET TITLE
1.	T-1	TITLE SHEET
2.	S-1	SURVEY, EXISTING CONDITIONS PLAN
3.	EC	COUNTY OF MARIN MCSTOPPP
4.	D-1	DEMOLITION PLAN
5.	L-1	LAYOUT PLAN
6.	G-1	GRADING AND DRAINAGE PLAN
7.	CD-1	CONSTRUCTION DETAILS
8.	CD-2	CONSTRUCTION DETAILS
9.	I-1	IRRIGATION PLAN
10.	I-2	IRRIGATION PLAN, LEGEND AND NOTES
11.	I-3	IRRIGATION DETAILS
12.	I-4	IRRIGATION DETAILS

PROJECT LOCATION

PROJECT LOCATION

North

abey arnold ASSOCIATES
LANDSCAPE ARCHITECTS

1005 A Street, Suite 305
San Rafael, California 94901

Phone 415-258-9580
Fax 415/258-9780

CA License #2616

Seal

LICENSED LANDSCAPE ARCHITECT
Peter C. Arnold
Signature
03/31/24
Renewal Date
06/22/2022
Date
STATE OF CALIFORNIA

Consultants

All drawings and written material appearing herein are the original unpublished work of Abey/Arnold Associates and may not be used or duplicated in any form without the written consent of Abey/Arnold Associates.

Project

Athletic Field Turf Renovation Project

Memorial Park

1000 Sir Francis Drake Blvd.
San Anselmo, CA 94960

Drawing Title

TITLE SHEET

Date: June 22, 2022

Job #: 2005

Revisions

Sheet Number

T-1

1 Of 12 Sheets

NOTES

ELEVATIONS ARE BASED ON NAVD 88 DATUM.
BENCHMARK K1394, ELEVATION 91.87' NAVD88 WAS USED
TO ESTABLISH ELEVATION SHOWN HEREIN.

1' CONTOUR INTERVAL

FENCE LINE

TREE AS NOTED

APN ASSESSOR PARCEL NUMBER

SPOT ELEVATION

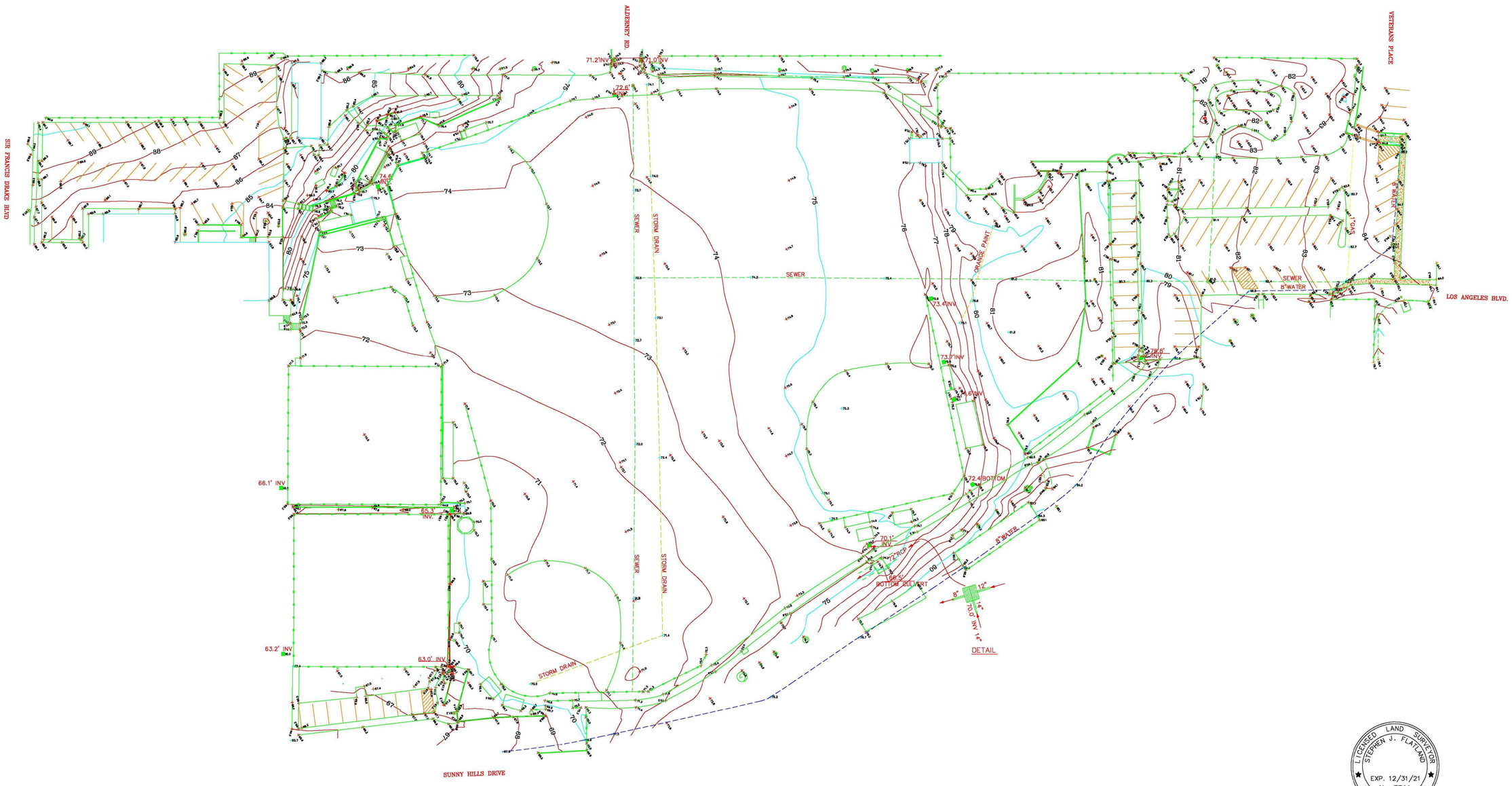

LICENSED LAND SURVEYOR
STEPHEN J. FLATLAND
EXP. 12/31/21
No. 7744
STATE OF CALIFORNIA

40 0 40 80 120

Scale 1" = 40'

SHEET 2 of 12

Item 1.3
Attachment 1

STEPHEN J. FLATLAND
PROFESSIONAL LAND SURVEYOR
P.O. BOX 1837
SAN ANSELMO, CALIFORNIA 94960
(415) 457-5081

TOPOGRAPHIC SURVEY
FOR: TOWN OF SAN ANSELMO
MEMORIAL PARK LIMITS
SAN ANSELMO, CALIFORNIA
APN 047-112-60

DATE: FEB., 2020
SCALE: 1"=40'
DRAWN:
CHECKED:
JOB NO: F1178

1

Marin County Stormwater Pollution Prevention Program

Minimum Control Measures
For Small Construction Projects

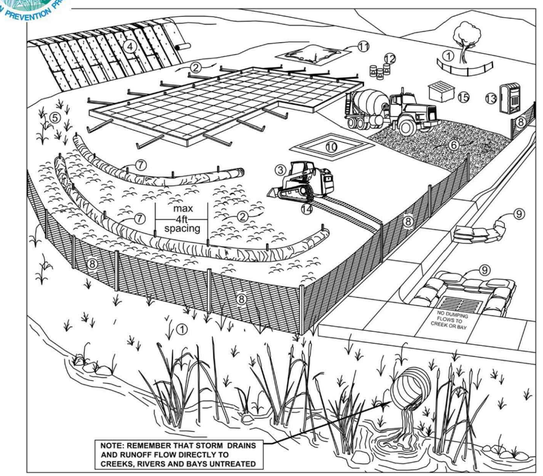

Erosion Controls	Sediment Controls	Good Housekeeping
NS Scheduling	6. Tracking Controls	10. Concrete Washout
1. Preserve Vegetation & Creek Set Backs	7. Fiber Rolls	11. Stockpile Management
2. Soil Cover	8. Silt Fence	12. Hazardous Material Management
3. Soil Preparation/ Roughening	9. Drain Inlet Protection	13. Sanitary Waste Management
4. Erosion Control Blankets	NS Trench Dewatering	14. Equipment and Vehicle Maintenance
5. Revegetation		15. Litter and Waste Management

NS=not shown on graphic

Note: Select an **effective combination of control measures from each category**, Erosion Control, Sediment Control, and Good Housekeeping. Control measures shall be **continually implemented and maintained throughout the project** until activities are complete, disturbed areas are stabilized with permanent erosion controls, and the local agency has signed off on permits that may have been required for the project. **Inspect and maintain the control measures** before and after rain events, and as required by the local agency or state permit.
More detailed information on the BMPs can be found in the related California Stormwater Quality Association (CASQA) and California Department of Transportation (Caltrans) BMP Factsheets. CASQA factsheets are available by subscription in the *California Best Management Practices Handbook Portal: Construction* at http://www.casqa.org. Caltrans factsheets are available in the *Construction Site BMP Manual March 2003* at http://www.dot.ca.gov/hq/construc/stormwater/manuals.htm.
Visit www.mcstoppp.org for more information on construction site management and Erosion and Sediment Control Plans.

If you require materials in alternative formats, please contact:
415-473-4381 voice/TTY or disabilityaccess@co.marin.ca.us

Control Measure		General Description
Erosion Control Best Management Practices		
N/A	Scheduling	Plan the project and develop a schedule showing each phase of construction. Schedule construction activities to reduce erosion potential, such as scheduling ground disturbing activities during the summer and phasing projects to minimize the amount of area disturbed. *For more info see the following factsheets: CASQA: EC-1; or Caltrans: SS-1.*
1	Preserve Existing Vegetation and Creek Setbacks	Preserve existing vegetation to the extent possible, especially along creek buffers. Show creek buffers on maps and identify areas to be preserved in the field with temporary fencing. Check with the local Planning and Public Works Departments for specific creek set back requirements. *For more info see the following factsheets: CASQA: EC-2; or Caltrans: SS-2.*
2	Soil Cover	Cover exposed soil with straw mulch and tackifier (or equivalent). *For more info see the following factsheets: CASQA: EC-3, EC-5, EC-6, EC-7, EC-8, EC-14, EC-16; or Caltrans: SS-2, SS-4, SS-5, SS-6, SS-7, SS-9.*
3	Soil Preparation/ Roughening	Soil preparation is essential to vegetation establishment and BMP installation. It includes soil testing and amendments to promote vegetation growth as well as roughening surface soils by mechanical methods (decompacting, scarifying, stair stepping, etc.). *For more info see the following factsheets: CASQA: EC-15.*
4	Erosion Control Blankets	Install erosion control blankets (or equivalent) on disturbed sites with 3:1 slopes or steeper. Use wildlife-friendly blankets made of biodegradable natural materials. Avoid using blankets made with plastic netting or fixed aperture netting. See: http://www.coastal.ca.gov/nps/Wildlife-Friendly_Products.pdf. *For more info see the following factsheets: CASQA: EC-7; or Caltrans: SS-7.*
5	Revegetation	Re-vegetate areas of disturbed soil or vegetation as soon as practical. *For more info see the following factsheets: CASQA: EC-4; or Caltrans: SS-4.*
Sediment Control Best Management Practices		
6	Tracking Controls	Stabilize site entrance to prevent tracking soil offsite. Inspect streets daily and sweep street as needed. Require vehicles and workers to use stabilized entrance. Place crushed rock 12-inches deep over a geotextile, using angular rock between 4 and 6-in. Make the entrance as long as can be accommodated on the site, ideally long enough for 2 revolutions of the maximum tire size (16-20 feet long for most light trucks). Make the entrance wide enough to accommodate the largest vehicle that will access the site, ideally 10 feet wide with sufficient radii for turning in and out of the site. Rumble pads or rumble racks can be used in lieu of or in conjunction with rock entrances. Wheel washes may be needed where space is limited or where the site entrance and sweeping is not effective. *For more info see the following factsheets: CASQA: TC-1; TC-3; or Caltrans: TC-1; TC-3.*
7	Fiber Rolls	Use fiber rolls as a perimeter control measure, along contours of slopes, and around soil stockpiles. On slopes space rolls 10 to 20 feet apart (using closer spacing on steeper slopes). Install parallel to contour. If more than one roll is used in a row overlap roll do not abut. J-hook end of roll upslope. Install rolls per either Type 1 (stake rolls into shallow trenches) or Type 2 (stake in front and behind roll and lash with rope). Use wildlife-friendly fiber rolls made of biodegradable natural materials. Avoid using fiber rolls made with plastic netting or fixed aperture netting. See: http://www.coastal.ca.gov/nps/Wildlife-Friendly_Products.pdf. Manufactured linear sediment control or compost socks can be used in lieu of fiber rolls. *For more info see the following factsheets: CASQA: SE-5 (Type 1); SE-12, SE-13; or Caltrans: SC-5 (Type 1 and Type 2).*
8	Silt Fence	Use silt fence as a perimeter control measure, and around soil stockpiles. Install silt fence along contours. Key silt fence into the soil and stake. Do not use silt fence for concentrated water flows. Install fence at least 3 feet back from the slope to allow for sediment storage. Wire backed fence can be used for extra strength. Avoid installing silt fence on slopes because they are hard to maintain. Manufactured linear sediment control can be used in lieu of silt fences. *For more info see the following factsheets: CASQA: SE-1; SE-12; or Caltrans: SC-1.*
9	Drain Inlet Protection	Use gravel bags, (or similar product) around drain inlets located both onsite and in gutter as a last line of defense. Bags should be made of a woven fabric resistant to photo-degradation filled with 0.5-1-in washed crushed rock. Do not use sand bags or silt fence fabric for drain inlet protection. *For more info see the following factsheets: CASQA: SE-10; or. Caltrans: SC-10.*
N/A	Trench Dewatering	Follow MCSTOPPP BMPs for trench dewatering. http://www.marincounty.org/depts/pw/divisions/mcstoppp/development/~/media/Files/Departments/PW/mcstoppp/development/TrenchingSWReqMCSTOPPPFinal6_09.pdf. *For more info see the following factsheets: CASQA: NS-2; or Caltrans: NS-2.*
Good Housekeeping Best Management Practices		
10	Concrete Washout	Construct a lined concrete washout site away from storm drains, waterbodies, or other drainages. Ideally, place adjacent to stabilized entrance. Clean as needed and remove at end of project. *For more info see the following factsheets: CASQA: WM-8; or .Caltrans: WM-8.*
11	Stockpile Management	Cover all stockpiles and landscape material and berm properly with fiber rolls or sand bags. Keep behind the site perimeter control and away from waterbodies. *For more info see the following factsheets: CASQA: WM-3 or Caltrans: WM-3.*
12	Hazardous Material Management	Hazardous materials must be kept in closed containers that are covered and within secondary containment; do not place containers directly on soil. *For more info see the following factsheets: CASQA: WM-6; or Caltrans: WM-6.*
13	Sanitary/Waste Management	Place portable toilets near stabilized site entrance, behind the curb and away from gutters, storm drain inlets, and waterbodies. Tie or stake portable toilets to prevent tipping and equip units with overflow pan/tray (most vendors provide these). *For more info see the following factsheets: CASQA: WM-9; or Caltrans: WM-9.*
14	Equipment and Vehicle Maintenance	Prevent equipment fluid leaks onto ground by placing drip pans or plastic tarps under equipment. Immediately clean up any spills or drips. *For more info see the following factsheets: CASQA: NS-8, NS-9, and NS-10; or Caltrans: NS-8, NS-9, and NS-10.*
15	Litter and Waste Management	Designate waste collection areas on site. Use watertight dumpsters and trash cans; inspect for leaks. Cover at the end of each work day and when it is raining or windy. Arrange for regular waste collection. Pick up site litter daily. *For more info see the following factsheets: CASQA: WM-5; or Caltrans: WM-5.*

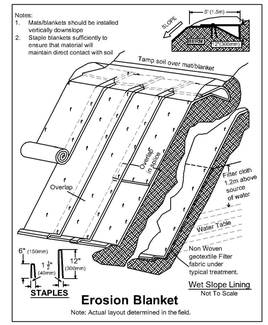

Erosion Blanket
Wet Slope Lining
Not To Scale
Note: Actual layout determined in the field.

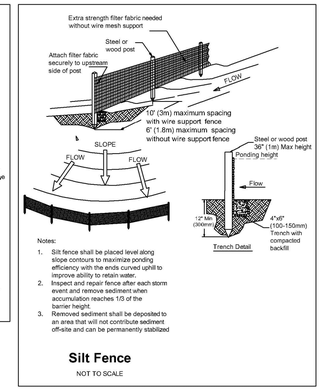

Silt Fence
NOT TO SCALE

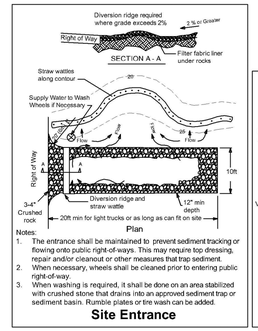

Site Entrance

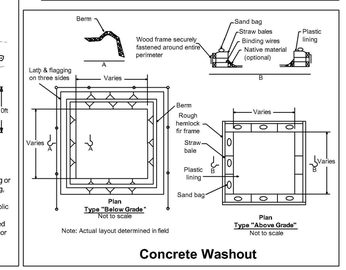

Concrete Washout

Catch Basins with Gravel Bags
(Do not use sand bags near inlets)

abey arnold
ASSOCIATES
LANDSCAPE ARCHITECTS

1005 A Street, Suite 305
San Rafael, California 94901

Phone 415-258-9580
Fax 415/258-9780

CA License #2616

Seal

LICENSED LANDSCAPE ARCHITECT
Arnold
Signature
03/31/24
Renewal Date
06/22/2022
Date
STATE OF CALIFORNIA

Consultants

All drawings and written material appearing herein are the original unpublished work of Abey/Arnold Associates and may not be used or duplicated in any form without the written consent of Abey/Arnold Associates.

Project

Athletic Field Turf Renovation Project

Memorial Park

1000 Sir Francis Drake Blvd.
San Anselmo, CA 94960

Drawing Title

MCSTOPPP EROSION CONTROL

Date: June 22, 2022
Job #: 2005

Revisions

Sheet Number

EC

3 Of 12 Sheets

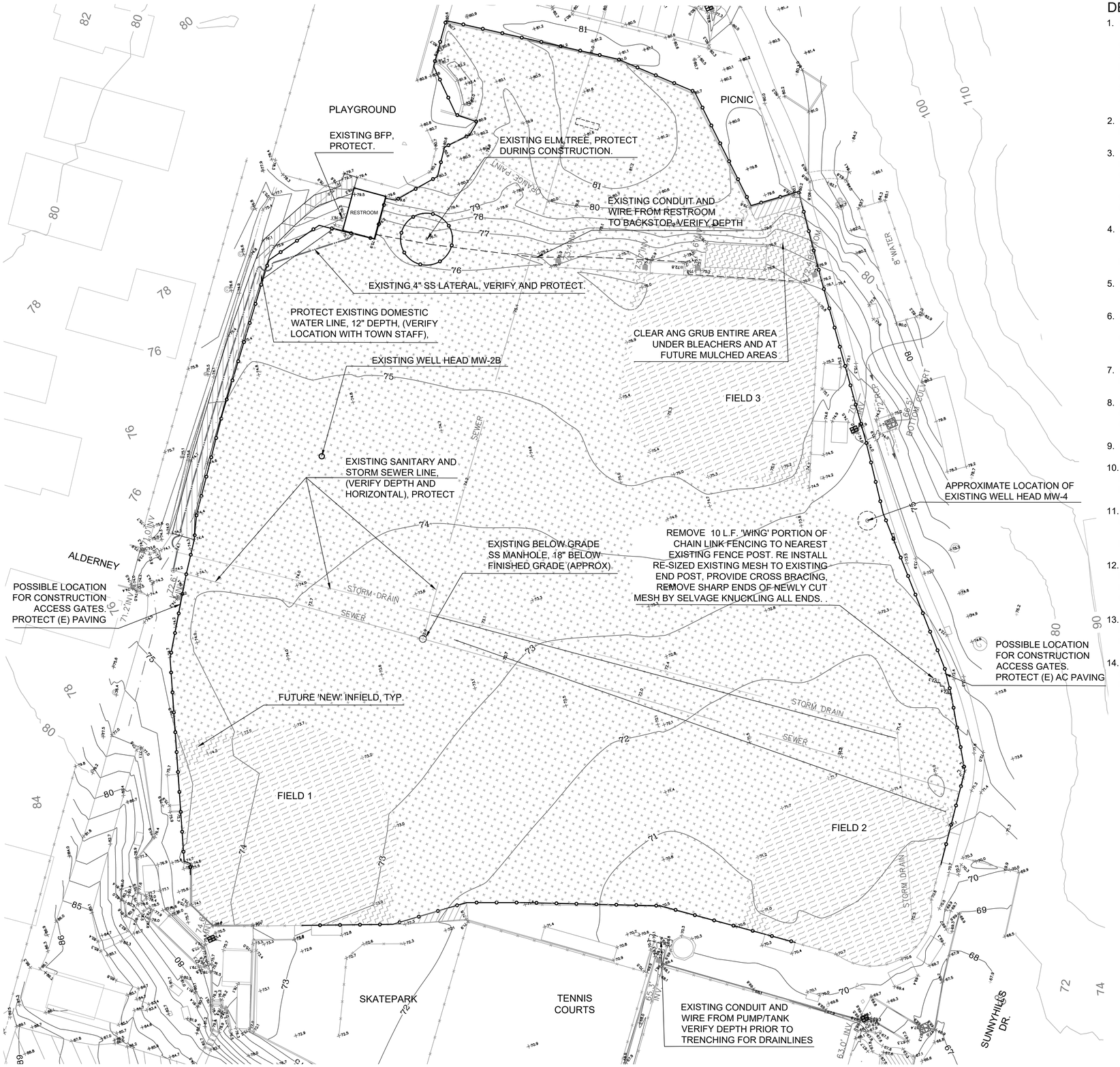

DEMOLITION/MOBILIZATION NOTES

1. CONTRACTOR SHALL SUPPLY ALL NECESSARY TEMPORARY FENCING TO SECURE THE JOB SITE AND ALLOW STORAGE OF EQUIPMENT AND MATERIALS DURING CONSTRUCTION OPERATIONS. FENCING SHALL BE 6' MIN. HEIGHT CHAIN-LINK WITH STEEL FRAMING AND FOOTINGS. FENCING SHALL BE APPROXIMATELY IN LOCATIONS SHOWN AND SHALL NOT IMPEDE ACCESS OR USE OF ENTIRE SURFACE OF EXISTING PATHWAYS. CONTRACTOR TO PROVIDE STRUCTURALLY SOUND AND SECURE LOCKABLE GATES, SIZED APPROPRIATELY TO ALLOW FOR EQUIPMENT AND DELIVERIES TO THE CONSTRUCTION ZONE.

2. CONTRACTOR SHALL MEET ONSITE WITH TOWN STAFF PRIOR TO DEMOLITION TO REVIEW LAYOUT AND IMPROVEMENTS TO BE PROTECTED.

3. TREE PROTECTION SHALL CONSIST OF EMBEDDED 6' TALL CHAIN LINK FENCING INSTALLED SO IT THAT PREVENTS LARGE CONSTRUCTION EQUIPMENT FROM COMPACTING SOIL WITHIN THE DRIPLINE OF THE TREE. IF DEEMED BENEFICIAL TO THE TREE'S HEALTH BY A CERTIFIED ARBORIST AND THE TOWN, SOME TRIMMING OF THE LOWER TREE BRANCHES MAY BE ALLOWED. THIS WORK WILL NOT COMMENCE WITHOUT WRITTEN PERMISSION BY THE TOWN PROJECT MANAGER.

4. PRIOR TO BEGINNING 'TURF TILL-IN', THE CONTRACTOR SHALL NOTIFY THE TOWN AND REQUEST THAT WATERING OF THE EXISTING TURF BE STOPPED TO ALLOW TURF DIE BACK AND DRY OUT. TURF SHALL NOT BE TILLED INTO THE SOIL UNTIL MOISTURE LEVELS ARE LOW ENOUGH TO ALLOW PROPER DECOMPOSITION.

5. CONTRACTOR TO PROVIDE DUST CONTROL MEASURES DURING ALL PORTIONS OF THE DEMOLITION PROCESS IN WHICH DUST IS CREATED.

6. ALL EXISTING IRRIGATION ROTOR HEADS SHALL BE SALVAGED AND HANDED OVER TO TOWN STAFF. REMAINING IRRIGATION EQUIPMENT, (REMOTE CONTROL VALVES, CONTROLLER, PIPE, QUICK COUPLERS, GATE VALVES ETC...),SHALL BE REMOVED AND DISPOSED OF.

7. CONTRACTOR SHALL NOTIFY STAFF AND DESIGNER OF ANY DISCREPANCIES BETWEEN THE PLANS AND SITE CONDITIONS PRIOR TO DEMOLITION.

8. ALL REFUSE RESULTING FROM DEMOLITION SHALL BE OFF HAULED AND DISPOSED OF IN A LEGAL AND PROPER MANNER, FOLLOWING ALL STATE AND LOCAL ORDINANCES.

9. PROVIDE WASTE REPORTS FOR ALL REFUSE.

10. CONTRACTOR TO PROVIDE VERIFICATION TO TOWN STAFF THAT EXISTING LIVE IRRIGATION LINES HAVE BEEN CUT AND CAPPED PRIOR TO DEMOLITION IN LANDSCAPE AREAS.

11. CONTRACTOR TO EXERCISE EXTREME CAUTION WHEN WORKING NEAR EXISTING UTILITY LINES. CONTRACTOR TO CONTACT THE APPROPRIATE UTILITY,(ROSS VALLEY SANITARY, MARIN WATER, TOWN OF SAN ANSELMO), AND TOWN ENGINEER IF UTILITY CONFLICTS OCCUR DURING DEMOLITION.

12. CONTRACTOR SHALL PROTECT ALL EXISTING IMPROVEMENTS NOT INDICATED FOR REMOVAL WITHIN THE PROJECT SITE AND IS RESPONSIBLE FOR REPLACEMENT OF ITEMS DAMAGED DURING THE INSTALLATION OF THE PROJECT AT THE CONTRACTORS EXPENSE, (LABOR, MATERIALS AND PROFIT INCLUDED).

13. CONTRACTOR IS RESPONSIBLE FOR RECORDING EXISTING SITE CONDITIONS PRIOR TO COMMENCING AND IS TO PROVIDE A DATED COPY OF RECORDED INFORMATION TO THE TOWN.

14. DURING MATERIAL AND EQUIPMENT DELIVERIES, CONTRACTOR SHALL COORDINATED WITH TOWN STAFF AND PROVIDE SIGNS, BARRIERS AND PERSONNEL NECESSARY TO FACILITATE SAFE PATHWAY CLOSURES .

DEMOLITION LEGEND

- TURF AND IRRIGATION SYSTEM REMOVAL, (THOROUGHLY TILL EXISTING TURF INTO EXISTING SOIL TO 12" MINIMUM DEPTH)
- INFIELD AREA FOR STAGING , (PROTECT EXISTING INFIELD MIX, REMOVE AND REPLACE ALL MIX CONTAMINATED DURING CONSTRUCTION.)
- REMOVE EXISTING 'MIXED PAVING' (INFIELD MIX/ASPHALT/DG) TO A DEPTH OF 9" IN PREPARATION FOR NEW ASPHALT PAVING.
- CLEAR AND GRUB FOR INFIELD MIX AND/OR MULCH INSTALLATION
- APPROXIMATE LOCATION OF CONSTRUCTION FENCING. CONTRACTOR IS RESPONSIBLE FOR CREATING A SECURE AND SAFE CONSTRUCTION SITE.

DEMOLITION PLAN

North

0' 15' 30' 60'

abey arnold ASSOCIATES
LANDSCAPE ARCHITECTS

1005 A Street, Suite 305
San Rafael, California 94901

Phone 415-258-9580
Fax 415/258-9780

CA License #2616

Seal

LICENSED LANDSCAPE ARCHITECT
Steven C. Arnold
Signature
03/31/24
Renewal Date
06/22/2022
Date
STATE OF CALIFORNIA

Consultants

All drawings and written material appearing herein are the original unpublished work of Abey/Arnold Associates and may not be used or duplicated in any form without the written consent of Abey/Arnold Associates.

Project

Athletic Field Turf Renovation Project

Memorial Park

1000 Sir Francis Drake Blvd.
San Anselmo, CA 94960

Drawing Title

DEMOLITION PLAN

Date: June 22, 2022

Job #: 2005

Revisions

Sheet Number

D-1

4 Of 12 Sheets

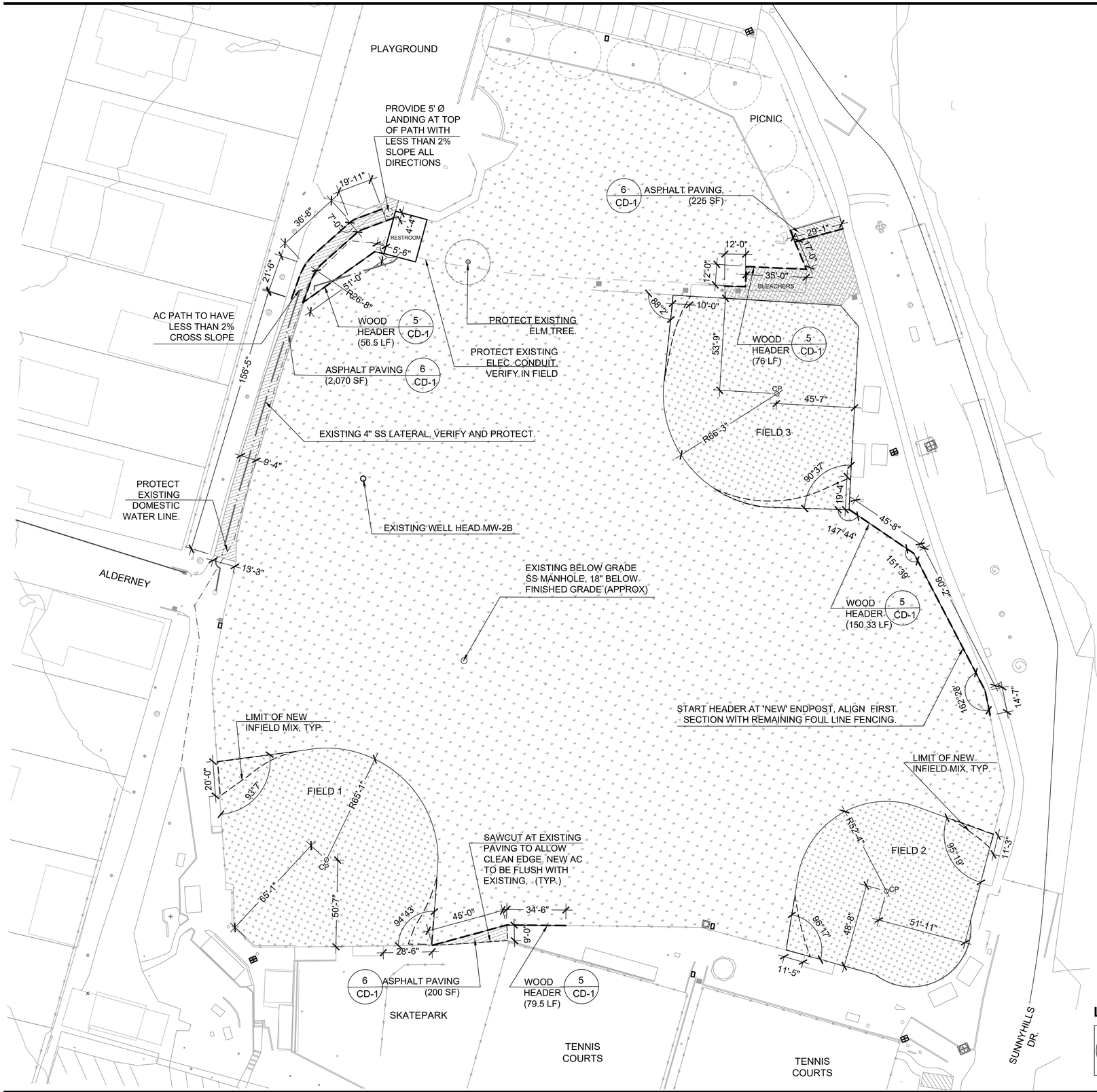

LAYOUT LEGEND

BASEBALL INFIELDS, TMT 'PAC BELL INFIELD FINES' OR EQUAL. RE-GRADE PER PLAN, MAINTAIN MINIMUM 3" DEPTH INFIELD MIX, (40 CUBIC YARD INFIELD MIX MATERIAL ALLOWANCE). FOLLOWING IRRIGATION AND GRADING OPERATIONS, REPAIR AND FINE GRADE INFIELD. PROVIDE ADDITIONAL INFIELD SURFACING AT CORNERS TO CREATE NEW LIMIT OF SURFACING AS SHOWN ON PLAN. COMPACT TO 90%.

TALL FESCUE SOD and LIMIT OF SOIL PREPARATION, FINE GRADE TO MEET NEW GRADES INDICATED, (139,030 S.F.)
(SOD - WEST COAST TURF, 'WEST COASTER' TALL FESCUE OR EQ.)

3" DEPTH WOOD MULCH, (1,900 S.F.)
REDI GROW, GOLDEN NUGGETS, (916) 381-6063

ASPHALT PAVING

SAWCUT AT EXISTING PAVING

CP CENTER POINT OF LAYOUT RADIUS

WOOD HEADER
(HEADER AT AC PAVING TO BE INCLUDED IN PAVING COST)

LAYOUT NOTES

1. CONTRACTOR SHALL VERIFY EXISTING CONDITIONS AND DIMENSIONS IN THE FIELD PRIOR TO COMMENCING WORK. ALL DISCREPANCIES OR QUESTIONS SHALL BE BROUGHT TO THE ATTENTION OF THE PROJECT COORDINATOR FOR RESOLUTION.
2. CONTRACTOR IS TO FINE GRADE AND BLEND INFIELD MIX MATERIAL AND CREATE A 'PLANAR' SURFACE. PROVIDE NEW INFIELD SURFACING AT CORNERS OF EACH FIELD PER THE DEMOLITION PLAN. SUBMIT SAMPLE OF MIX FOR APPROVAL. NEW INFIELD AREAS ARE TO BE 3" MIN. DEPTH INFIELD MIX OVER COMPACTED SUBGRADE, (92% MIN.).
3. CONTRACTOR SHALL BE RESPONSIBLE FOR ALL STAKING OF PAVING AND HEADER IMPROVEMENTS.
4. CONTRACTOR SHALL NOT WILLFULLY PROCEED WITH CONSTRUCTION AS DESIGNED WHEN IT IS OBVIOUS THAT UNKNOWN OBSTRUCTIONS AND/OR SITE CONDITIONS EXIST THAT MAY NOT HAVE BEEN KNOWN DURING DESIGN. SUCH CONDITIONS SHALL BE IMMEDIATELY BROUGHT TO THE ATTENTION OF THE TOWN PROJECT ENGINEER.
5. ALL UTILITY BOXES WITHIN PAVED AND LANDSCAPED AREAS ARE TO BE ADJUSTED AND/OR EXTENDED TO MEET NEW FINISHED GRADES.
6. CONTRACTOR TO BE RESPONSIBLE FOR HAVING TRAINED PERSONNEL FOR SWPPP, MONITORING AND ASSOCIATED REPORTS.

LAYOUT PLAN

North

0' 15' 30' 60'

abey arnold ASSOCIATES
LANDSCAPE ARCHITECTS

1005 A Street, Suite 305
San Rafael, California 94901

Phone 415-258-9580
Fax 415/258-9780

CA License #2616

Seal

LICENSED LANDSCAPE ARCHITECT
Abey C. Arnold 4332
Signature
03/31/24
Renewal Date
06/22/2022
Date
STATE OF CALIFORNIA

Consultants

All drawings and written material appearing herein are the original unpublished work of Abey/Arnold Associates and may not be used or duplicated in any form without the written consent of Abey/Arnold Associates.

Project

Athletic Field Turf Renovation Project

Memorial Park

1000 Sir Francis Drake Blvd.
San Anselmo, CA 94960

Drawing Title

LAYOUT PLAN

Date: June 22, 2022

Job #: 2005

Revisions

Sheet Number

L-1

5 Of 12 Sheets

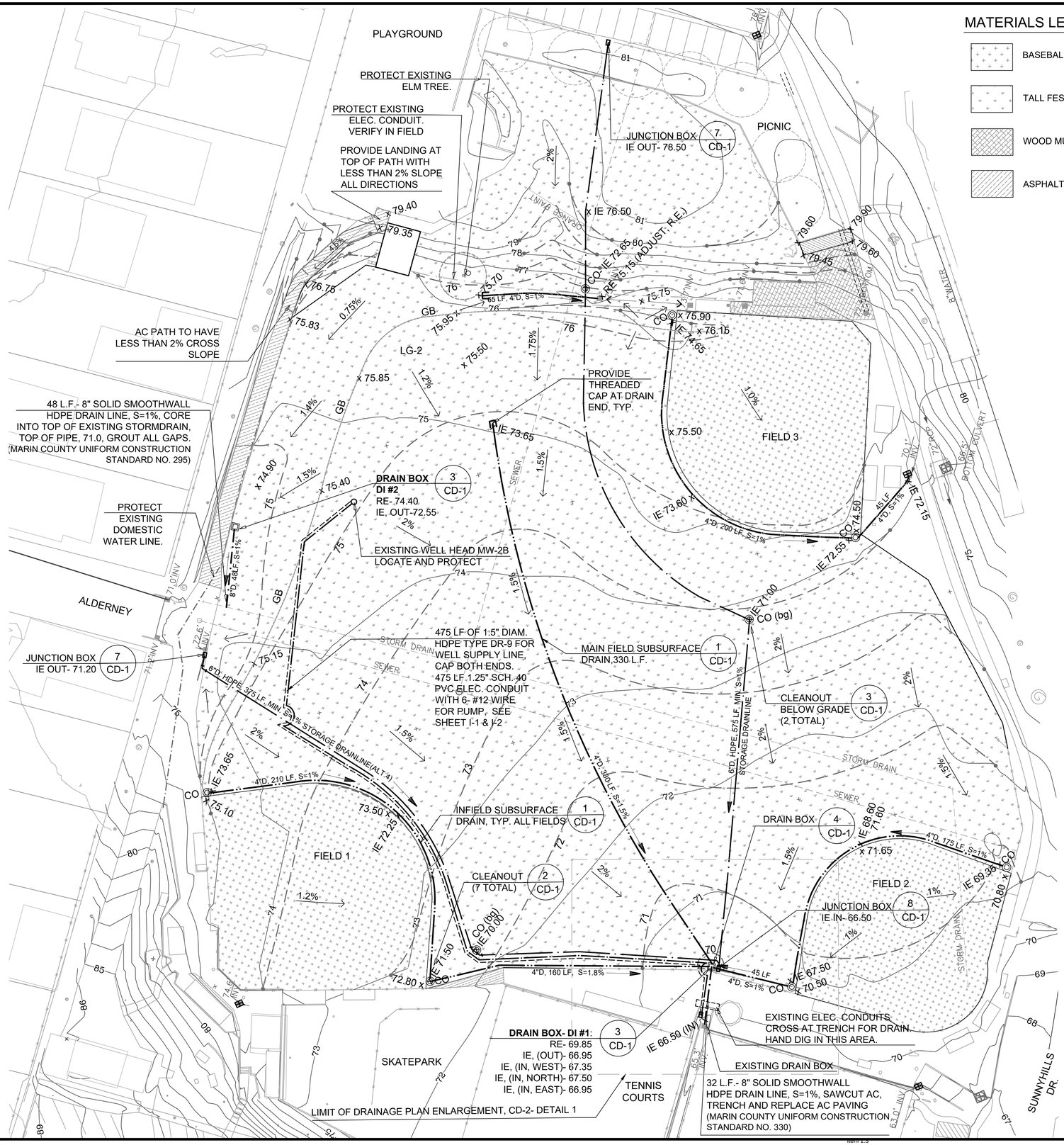

GRADING and DRAINAGE PLAN

MATERIALS LEGEND

- BASEBALL INFIELDS
- TALL FESCUE SOD
- WOOD MULCH
- ASPHALT PAVING

GRADING/DRAINAGE LEGEND

+ 0.00	EXISTING ELEVATION
x 0.00 IE	PIPE INVERT ELEVATION
x 0.00 RE	RIM ELEVATION
x 0.00	FINISHED GRADE ELEVATION
←	DIRECTION OF SURFACE FLOW
GB	GRADE BREAK
90	EXISTING CONTOUR
90	PROPOSED CONTOUR
CO	CLEANOUT - AT GRADE WITH BOX
CO (bg)	CLEANOUT- BELOW GRADE WITH LOCATION WIRE
	DRAIN BOX- PRECAST CONCRETE, 24", WITH PROTECTIVE COVER
	PUMP SUPPLY LINE, HDPE TYPE DR9, CAP BOTH ENDS
	PUMP ELECTRICAL CONDUIT AND WIRE, (6- 12g, INSULATED SOLID COPPER)
4"D, 100 LF, S=1%	PERFORATED DRAIN LINE, (Smoothwall, HDPE) S= SLOPE, D=INSIDE DIAMETER, LF= LINEAR FT
4"D, 100 LF, S=1%	SOLID DRAIN LINE, (Smoothwall, HDPE) S= SLOPE, D=INSIDE DIAMETER, LF= LINEAR FT (FOR 'STORAGE DRAINLINES' UTILIZE IRRIGATION TRENCH WHEN POSSIBLE. PIPE IS TO BE INSTALLED BELOW IRRIGATION MAINLINE AND/OR LATERAL)

GRADING/DRAINAGE NOTES

1. CONTRACTOR SHALL VERIFY ALL GRADES, EXISTING CONDITIONS AND DIMENSIONS IN THE FIELD PRIOR TO COMMENCING WORK. ALL DISCREPANCIES OR QUESTIONS SHALL BE BROUGHT TO THE ATTENTION OF THE PROJECT COORDINATOR FOR RESOLUTION.
2. THE INTENTION OF THIS PLAN IS TO HAVE A BALANCED SITE, INCLUDING TRENCH SPOILS, NO IMPORT OR EXPORT OF SOIL IS REQUIRED. EXCLUDING MATERIALS REMOVED FOR INSTALLATION OF AC PAVING, WHICH IS TO BE OFF HAULED.
3. CONTRACTOR IS TO PROVIDE AN ALLOWANCE OF 40 CUBIC YARDS OF INFIELD MIX MATERIAL FOR TO ACCOMMODATE CHANGES IN GRADE AT THE INFIELD AREAS. PROVIDE NEW INFIELD SURFACING AT CORNERS OF EACH FIELD PER PLAN. SUBMIT SAMPLE OF MIX FOR APPROVAL. NEW INFIELD AREAS ARE TO BE 3" MIN. DEPTH INFIELD MIX OVER COMPACTED SUBGRADE, (92% MIN.).
4. CONTRACTOR SHALL BE RESPONSIBLE FOR ALL STAKING OF NEW CONTOURS, AND MAKING THEMSELVES FAMILIAR WITH ALL UNDERGROUND UTILITIES, PIPES AND STRUCTURES. CONTRACTOR SHALL TAKE SOLE RESPONSIBILITY FOR COSTS INCURRED DUE TO DAMAGE AND REPLACEMENT OF SAID UTILITIES.
5. GRADING DUTIES, FOLLOWING INSTALLATION OF UNDERGROUND DRAINAGE AND IRRIGATION EQUIPMENT, INCLUDE ROTOTILLING OF EXISTING TURF INTO ON SITE SOIL and SOIL PREPARATION, STAKING OF ALL CONTOURS, ESTABLISHMENT OF NEW SUBGRADE ELEVATIONS (ALLOWING FOR SOIL PREPARATION AND SOD TURF MATERIAL), SOIL PREPARATION, FINE GRADING OF PREPARED SOIL (ALLOWING FOR SOD THICKNESS).
6. CONTRACTOR SHALL NOT WILLFULLY PROCEED WITH CONSTRUCTION AS DESIGNED WHEN IT IS OBVIOUS THAT UNKNOWN OBSTRUCTIONS AND/OR GRADE DIFFERENCES EXIST THAT MAY NOT HAVE BEEN KNOWN DURING DESIGN. SUCH CONDITIONS SHALL BE IMMEDIATELY BROUGHT TO THE ATTENTION OF THE ENGINEER.
7. ALL UTILITY BOXES WITHIN PAVED AND LANDSCAPED AREAS ARE TO BE ADJUSTED AND/OR EXTENDED TO MEET NEW FINISHED GRADES.
8. CONTRACTOR TO BE RESPONSIBLE FOR HAVING TRAINED PERSONNEL FOR SWPPP, MONITORING AND ASSOCIATED REPORTS.

abey arnold ASSOCIATES LANDSCAPE ARCHITECTS

1005 A Street, Suite 305
San Rafael, California 94901

Phone 415-258-9580
Fax 415/258-9780

CA License #2616

Seal

LICENSED LANDSCAPE ARCHITECT
Abey C. Arnold
Signature
03/31/24
Renewal Date
06/22/2022
Date
STATE OF CALIFORNIA

Consultants

All drawings and written material appearing herein are the original unpublished work of Abey/Arnold Associates and may not be used or duplicated in any form without the written consent of Abey/Arnold Associates.

Project

Athletic Field Turf Renovation Project

Memorial Park

1000 Sir Francis Drake Blvd.
San Anselmo, CA 94960

Drawing Title

GRADING and DRAINAGE PLAN

Date: June 22, 2022

Job #: 2005

Revisions

Sheet Number

G-1

6 Of 12 Sheets

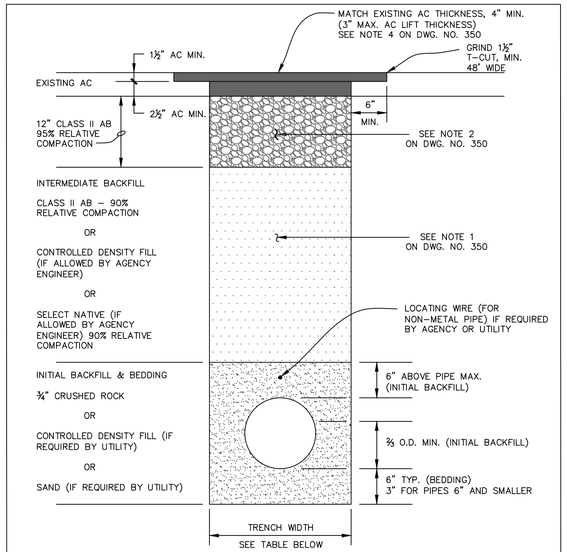

NOTE: IF ROADWAY HAS EXISTING AC OVER CONCRETE, TRENCH RESTORATION SHALL BE DETERMINED BY THE AGENCY ENGINEER.

TYPE 1

ASPHALT CONCRETE PAVED STREETS

CONDUIT SIZE	LESS THAN 6"	6" TO 24"	OVER 24" TO 60"	OVER 60"
TRENCH WIDTH	O.D. + 12"	O.D. + 24"	O.D. + 24"	O.D. + 24"

FOR PIPES WITH MORE THAN 36" OF COVER, THE AGENCY ENGINEER MAY ALLOW A REDUCED TRENCH WIDTH INCLUDING A CHANGE TO A SELF-COMPACTING ENGINEERED TYPE OF INITIAL BACKFILL MATERIAL.

UNIFORM STANDARDS ALL CITIES AND COUNTY OF MARIN	TRENCH DETAILS SHEET 1 OF 3	REV.	DATE	BY	MAY 2008 DWG. NO. 330

M:\Standards\County Standards (UCS)\2008 Updated County Standards

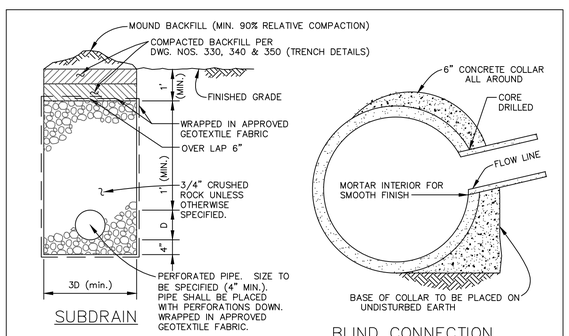

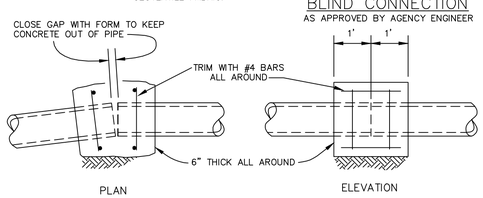

CONCRETE COLLAR

NOTES:

1. PERFORATED PIPE SHALL BE SCH. 40 PVC, HDPE, OR APPROVED EQUAL.
2. ALL CONCRETE SHALL BE CLASS "B" (5 SACK MIX) UNLESS OTHERWISE NOTED.

UNIFORM STANDARDS ALL CITIES AND COUNTY OF MARIN	BLIND CONNECTION, CONCRETE COLLAR, & SUBDRAIN	REV.	DATE	BY	MAY 2008 DWG. NO. 295

M:\Standards\County Standards (UCS)\2008 Updated County Standards

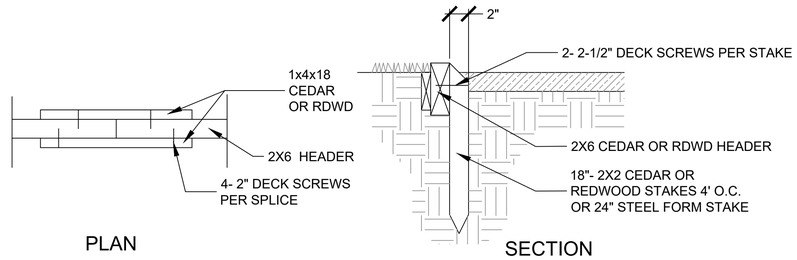

5 WOOD HEADER

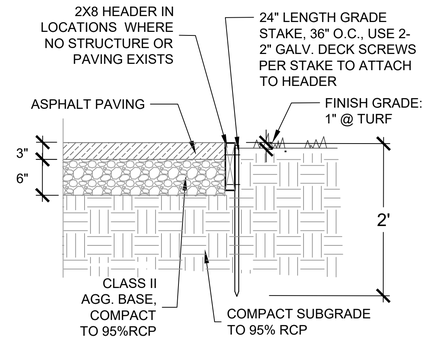

NOTES:

1. ASPHALT TO BE CALTRANS STAND PLAN, ½" MINUS, 3" MIN. DEPTH.
2. SEE GRADING PLAN FOR DIRECTION OF DRAINAGE.
3. WHERE NEW ASPHALT PAVING ABUTS AN UNEVEN EDGE AT EXISTING PAVING, SAWCUT EXISTING PAVING AS REQUIRED TO CREATE A SMOOTH TRANSITION. FINISH SURFACE SHALL BE FLUSH WITH EXISTING.

6 ASPHALT PATHWAY

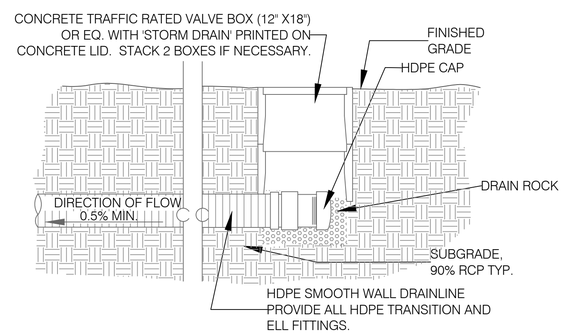

7 STORAGE DRAINLINE AND JUNCTION BOX

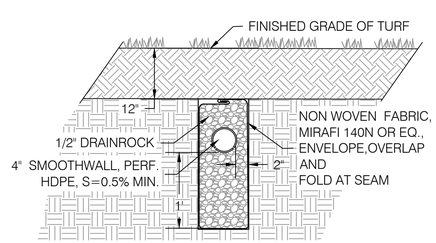

8 'MAIN FIELD' SUBSURFACE DRAINAGE

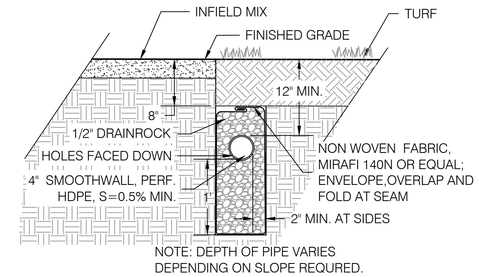

INFIELD SUBSURFACE DRAIN

1 SUBSURFACE DRAINAGE

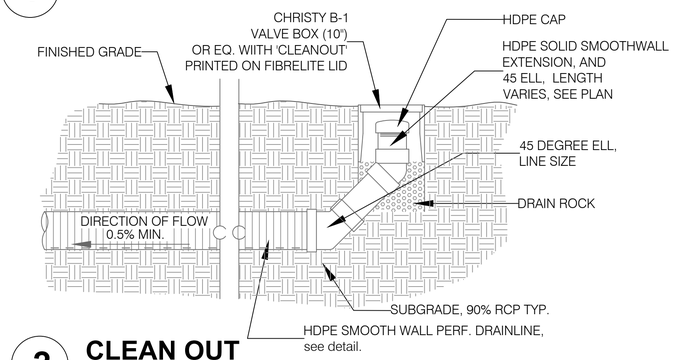

2 CLEAN OUT

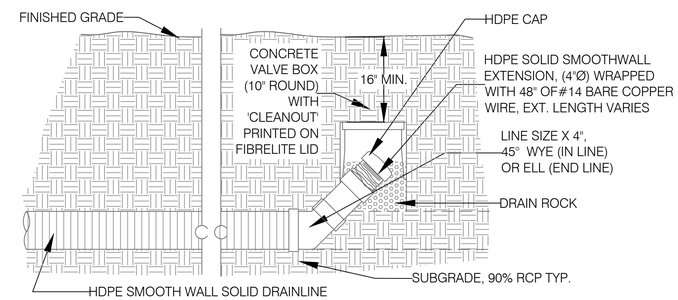

3 CLEAN OUT- BELOW GRADE INSTALLATION

NOTE:

1. CATCH BASIN: PRECAST NEWCASTLE OR EQ.

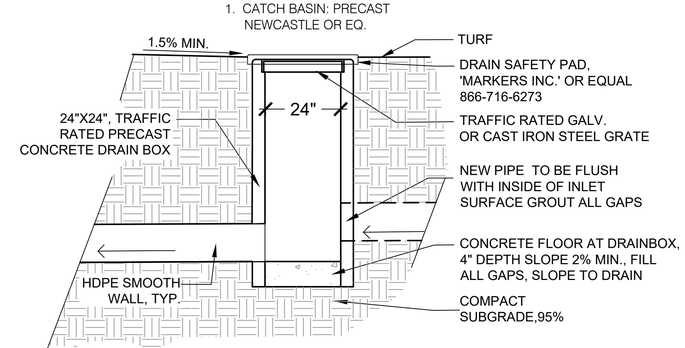

4 DRAIN BOX

abey arnold ASSOCIATES LANDSCAPE ARCHITECTS

1005 A Street, Suite 305
San Rafael, California 94901

Phone 415-258-9580
Fax 415/258-9780

CA License #2616

Seal

Consultants

All drawings and written material appearing herein are the original unpublished work of Abey/Arnold Associates and may not be used or duplicated in any form without the written consent of Abey/Arnold Associates.

Project

Athletic Field Turf Renovation Project

Memorial Park

1000 Sir Francis Drake Blvd.
San Anselmo, CA 94960

Drawing Title

CONSTRUCTION DETAILS

Date: June 22, 2022

Job #: 2005

Revisions

Sheet Number

CD-1

7 Of 12 Sheets

MATERIALS LEGEND

- BASEBALL INFIELDS
- TALL FESCUE SOD
- WOOD MULCH
- ASPHALT PAVING

GRADING/DRAINAGE LEGEND

+ 0.00	EXISTING ELEVATION
x 0.00 IE	PIPE INVERT ELEVATION
x 0.00 RE	RIM ELEVATION
x 0.00	FINISHED GRADE ELEVATION
←	DIRECTION OF SURFACE FLOW
GB	GRADE BREAK
90	EXISTING CONTOUR
90	PROPOSED CONTOUR
CO	CLEANOUT - AT GRADE WITH BOX
CO (bg)	CLEANOUT- BELOW GRADE WITH LOCATION WIRE
	DRAIN BOX- PRECAST CONCRETE, 24", WITH PROTECTIVE COVER
	PUMP SUPPLY LINE, HDPE TYPE DR9, CAP BOTH ENDS
	PUMP ELECTRICAL CONDUIT AND WIRE, (6- 12g, INSULATED SOLID COPPER)
4"D, 100 LF, S=1%	PERFORATED DRAIN LINE, (Smoothwall, HDPE) S= SLOPE, D=INSIDE DIAMETER, LF= LINEAR FT
4"D, 100 LF, S=1%	SOLID DRAIN LINE, (Smoothwall, HDPE) S= SLOPE, D=INSIDE DIAMETER, LF= LINEAR FT (FOR 'STORAGE DRAINLINES' UTILIZE IRRIGATION TRENCH WHEN POSSIBLE. PIPE IS TO BE INSTALLED BELOW IRRIGATION MAINLINE AND/OR LATERAL)

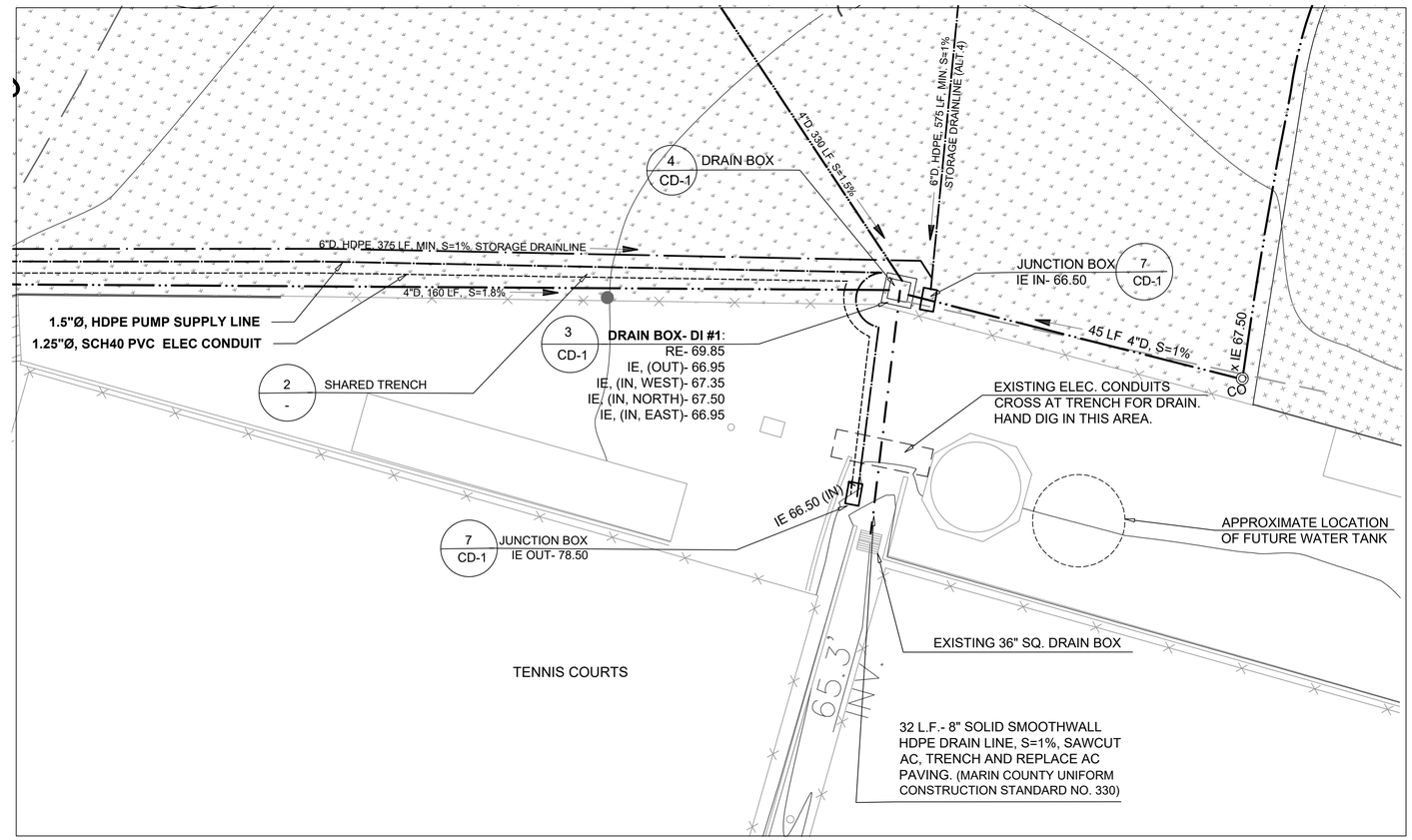

1 GRADING and DRAINAGE PLAN ENLARGEMENT

North

0' 5' 10' 20'

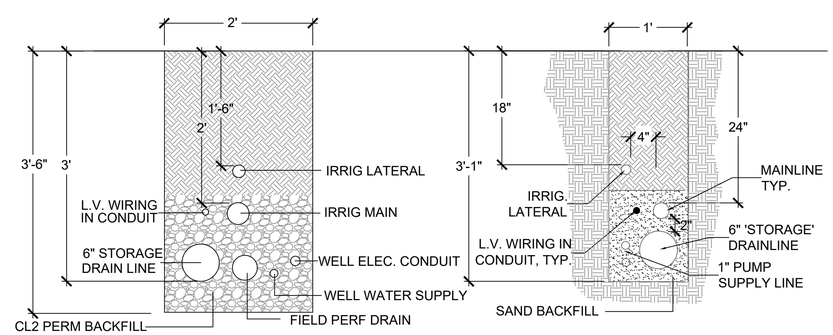

SHARED TRENCH- WITH PERF DRAIN

SHARED TRENCH- W/O PERF DRAIN

NOTES:

1. INSTALL 3" WIDE DETECTABLE WARNING TAPE 6" MIN. ABOVE MAINLINE.
2. SALVAGED EXCAVATED FILL COMPACTED TO ORIGINAL DENSITY IN ALL LANDSCAPED AREA, ALL OTHER AREAS SHALL BE AT 95% COMPACTION.
3. IN THE EVENT OF AN IRRIGATION LINE CONFLICTING WITH A DRAIN LINE, THE DRAIN LINE HAS PRIORITY. IF PROPER COVERAGE CANNOT BE ATTAINED ABOVE THE DRAIN LINES, THE IRRIGATION PIPES AND SLEEVES WILL BE INSTALLED BENEATH THE DRAIN LINE WITH 2" MIN. SEPARATION.

2 SHARED TRENCH

abey arnold ASSOCIATES LANDSCAPE ARCHITECTS

1005 A Street, Suite 305
San Rafael, California 94901

Phone 415-258-9580
Fax 415/258-9780

CA License #2616

Seal

LICENSED LANDSCAPE ARCHITECT
Robert C. Arnold 2337
Signature
03/31/24
Renewal Date
06/22/2022
Date
STATE OF CALIFORNIA

Consultants

All drawings and written material appearing herein are the original unpublished work of Abey/Arnold Associates and may not be used or duplicated in any form without the written consent of Abey/Arnold Associates.

Project

Athletic Field Turf Renovation Project

Memorial Park

1000 Sir Francis Drake Blvd.
San Anselmo, CA 94960

Drawing Title

CONSTRUCTION DETAILS

Date: June 22, 2022

Job #: 2005

Revisions

Sheet Number

CD-2

8 Of 12 Sheets

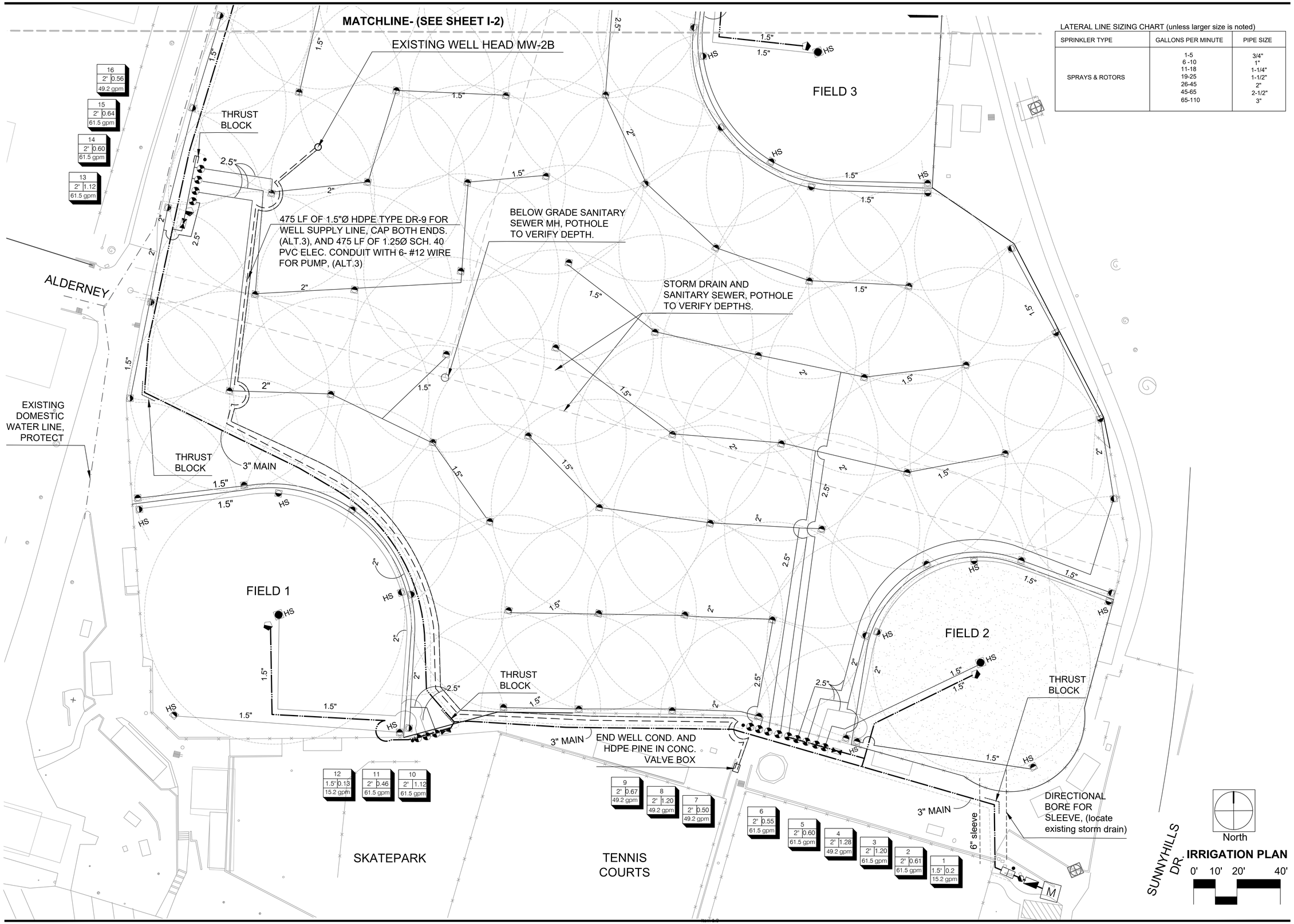

LATERAL LINE SIZING CHART (unless larger size is noted)

SPRINKLER TYPE	GALLONS PER MINUTE	PIPE SIZE
SPRAYS & ROTORS	1-5 6 -10 11-18 19-25 26-45 45-65 65-110	3/4" 1" 1-1/4" 1-1/2" 2" 2-1/2" 3"

abey arnold ASSOCIATES
LANDSCAPE ARCHITECTS

1005 A Street, Suite 305
San Rafael, California 94901

Phone 415-258-9580
Fax 415/258-9780

CA License #2616

Seal

LICENSED LANDSCAPE ARCHITECT
Abey C. Arnold 2352
Signature
03/31/24
Renewal Date
06/22/2022
Date
STATE OF CALIFORNIA

Consultants

All drawings and written material appearing herein are the original unpublished work of Abey/Arnold Associates and may not be used or duplicated in any form without the written consent of Abey/Arnold Associates.

Project

Athletic Field Turf Renovation Project

Memorial Park

1000 Sir Francis Drake Blvd.
San Anselmo, CA 94960

Drawing Title

IRRIGATION PLAN

Date: June 22, 2022

Job #: 2005

Revisions

Sheet Number

I-1

9 Of 12 Sheets

LATERAL LINE SIZING CHART (unless larger size is noted)

SPRINKLER TYPE	GALLONS PER MINUTE	PIPE SIZE
SPRAYS & ROTORS	1-5 6 -10 11-18 19-25 26-45 45-65 65-110	3/4" 1" 1-1/4" 1-1/2" 2" 2-1/2" 3"

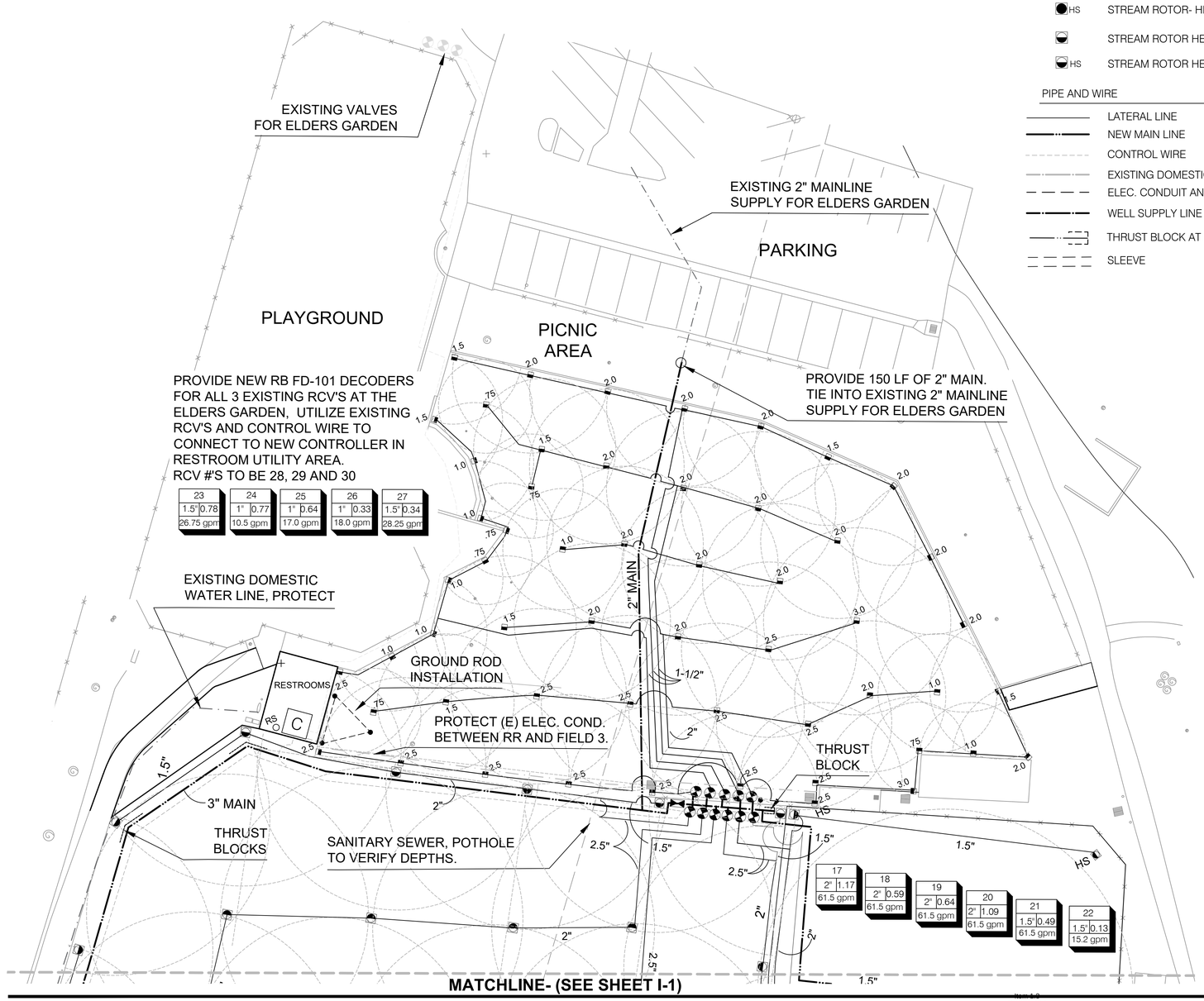

MATCHLINE- (SEE SHEET I-1)

IRRIGATION LEGEND

SYMBOL	DESCRIPTION	MANUFACTURER	MODEL		SIZE
M	MMWD METER (EXISTING)				2"
C	CONTROLLER	RAINBIRD	ESP-LXIVM-IQ4 W/ NCC CARTRIDGE		60 STATION
	EXISTING BACKFLOW PREVENTER, REINSTALL. PROVIDE NEW ENCLOSURE	WILKINS STRONGBOX	875XL BC-45CR- DARK GREEN		2"
	FLOW SENSOR and MASTERVALVE	RAINBIRD/SUPERIOR	FS200B / 3100- W/ RB DECODER		2"
RS	RAIN SENSOR	RAINBIRD	RSD-CEx		
	2-WIRE SURGE PROTECTOR(Ground Rod)	RAINBIRD	LSP-1TURF M10008		
	EXIST. PRESSURE REDUCER, REINSTALL	ZURN/WILKINS	500-XLFC		2"
	ISOLATION VALVE, (RES. SEAT GATE)	KENNEDY	KS-FW 8597 SS		3"
	QUICK COUPLING VALVE	RAINBIRD	44 NP		
	AUTOMATIC VALVE	RAINBIRD	EFB-CP-IVM-PRS-D		SEE PLAN
IRRIGATION HEADS				MANUF. PRECIP RATE	
	ROTOR	HUNTER	PGJ	0.55-0.68 IN/HR (PART CIR) 0.26-0.34 IN/HR (FULL CIR)	SEE PLAN
HS	STREAM ROTOR- HIGH SPEED OPP. NOZ.	HUNTER	I-40-06-ON-SS-HS	0.42-0.49 IN/HR	NOZZLE -18
	STREAM ROTOR HEAD	HUNTER	I-40-06-SS	0.91-1.05 IN/HR (PART CIR.) 0.46-0.53 IN/HR (FULL CIR.)	NOZZLE 13
HS	STREAM ROTOR HEAD-HIGH SPEED	HUNTER	I-40-06-SS-HS	1.07-1.24 IN/HR	NOZZLE 13
PIPE AND WIRE					
	LATERAL LINE	SCHEDULE 40	PVC		SEE PLAN and CHART
	NEW MAIN LINE	SCHEDULE 40	PVC- Non Potable Purple Pipe		SEE PLAN
	CONTROL WIRE	2 WIRE - RAINBIRD MAXI CABLE			
	EXISTING DOMESTIC WATER	PVC	VERIFY DEPTH AND LOCATION.		
	ELEC. CONDUIT AND WIRE	SCHEDULE 40PVC	(TO CONTAIN 6 12g- INSULATED SOLID CORE WIRES)		1.25" DIAM.
	WELL SUPPLY LINE	DR9	HDPE		1.5" DIAM.
	THRUST BLOCK AT MAIN LINE				
	SLEEVE	PVC OR HDPE (SMOOTHWALL)			

1 — VALVE NUMBER
1" 1.85 — PRECIP. RATE, (IN./HR.)
45.0 gpm — VALVE SIZE
GALLONS PER MINUTE

IRRIGATION NOTES

1. THE IRRIGATION SYSTEMS INDICATED IN THESE DRAWINGS REQUIRES THE DEMOLITION OF THE EXISTING SYSTEM AND THE INSTALLATION OF ALL NEW MAIN LINES, LATERAL LINES, ROTOR HEADS, ISOLATION VALVES, QCV'S, CONTROLLER, 2-WIRE CABLE AND MASTERVALVE/FLOW SENSOR. ALSO INCLUDED IS THE REMOVAL AND RE-INSTALLATION OF THE BACKFLOW PREVENTER AND PRESSURE REDUCING DEVICE WITH NEW PIPE, FITTINGS FROM THE METER TO SAID DEVICES, CONCRETE AND ENCLOSURE.
2. PROVIDE INSTALLATION BY PERSONS FAMILIAR WITH IRRIGATION WORK AND UNDER THE SUPERVISION OF A QUALIFIED SUPERVISOR.
3. OBTAIN THE PERMITS REQUIRED AND PROVIDE LABOR AND MATERIALS NECESSARY TO FULLY COMPLETE THE WORK IN ACCORDANCE WITH THE DRAWINGS AND THE SPECIFICATIONS.
4. LOCATE AND PROTECT NEW AND EXISTING UTILITIES PRIOR TO EXCAVATION.
5. DO NOT DAMAGE EXISTING UTILITIES PAVING OR STRUCTURES, CONTRACTOR TO PROVIDE REPAIRS TO ANY DAMAGED ITEMS AT NO ADDITIONAL COST TO THE TOWN.
6. REMOVE DEBRIS AND ACCUMULATION OF DEBRIS AS A RESULT OF IRRIGATION CONSTRUCTION FROM THE SITE AND LEAVE AREA IN A CLEAN CONDITION ACCEPTABLE TO TOWN'S REPRESENTATIVE
7. THESE DRAWINGS ARE DIAGRAMMATIC. EQUIPMENT SHOWN IN PAVING IS FOR CLARITY ONLY, INSTALL ALL SPECIFIED EQUIPMENT IN PLANTING AREAS. PLEASE NOTE THAT THE FLOW SENSOR AND MASTER VALVE ARE SHOWN IN AN AREA CONTAINING EXISTING UTILITIES AND THE NEW MAIN LINE. CONTRACTOR IS TO ADJUST LOCATIONS AS REQUIRED TO INSTALL NEW EQUIPMENT PER DETAILS AND SPECFICATIONS.
8. SPLICING OF 24 VOLT WIRES IS NOT PERMITTED.
9. PLASTIC VALVE BOXES ARE TO BE GREEN IN COLOR WITH BOLT DOWN, NON-HINGED COVER WITH VALVE NUMBERS MARKED PER SPECIFICATION. BOX BODY SHALL HAVE KNOCK OUTS. MANUFACTURER: RAINBIRD, CARSON, NDS OR APPROVED EQUAL.
10. FLUSH ALL PIPE OF ALL DELETERIOUS MATERIAL.
11. CONTRACTOR TO PROVIDE PRESSURE TESTS FOR MAINLINE, (200 PSI, 2 HOURS) AFTER INSTALLATION OF VALVES.
12. THIS IRRIGATION SYSTEM IS DESIGNED TO OPERATE AT 60 PSI. MAXIMUM FLOW RATE IS 65.0 GPM.
15. ALL SLEEVES INSTALLED AS A PART OF THIS CONTRACT ARE TO HAVE MINIMUM COVERAGE OF 18" AND EXTEND BEYOND THE BACK OF CURB 12" AT MEDIANS AND 12" BEYOND THE BACK OF SIDEWALK OR CURB AT ROADSIDES. MARK LOCATION OF SLEEVE TERMINUS WITH A VALVE BOX.
13. ALL EXISTING and PROPOSED UTILITY IMPROVEMENTS, INCLUDING BUT NOT LIMITED TO,PG&E,TELEPHONE, LIGHTING, AND/OR, DRAINAGE SHALL BE LOCATED AND VERIFIED PRIOR TO INSTALLATION OF ANY IRRIGATION EQUIPMENT. UTILITIES DAMAGED DURING THE EXECUTION OF THIS CONTRACT ARE TO BE REPAIRED AND OR REPLACED TO THEIR ORIGINAL CONDITION.

North

IRRIGATION PLAN

0' 10' 20' 40'

abey arnold ASSOCIATES
LANDSCAPE ARCHITECTS

1005 A Street, Suite 305
San Rafael, California 94901

Phone 415-258-9580
Fax 415/258-9780

CA License #2616

Seal

LICENSED LANDSCAPE ARCHITECT
Abey C. Arnold 2357
Signature
03/31/24
Renewal Date
06/22/2022
Date
STATE OF CALIFORNIA

Consultants

All drawings and written material appearing herein are the original unpublished work of Abey/Arnold Associates and may not be used or duplicated in any form without the written consent of Abey/Arnold Associates.

Project

Athletic Field Turf Renovation Project

Memorial Park

1000 Sir Francis Drake Blvd.
San Anselmo, CA 94960

Drawing Title

IRRIGATION PLAN NOTES & LEGEND

Date: June 22, 2022

Job #: 2005

Revisions

Sheet Number

I-2

10 Of 12 Sheets

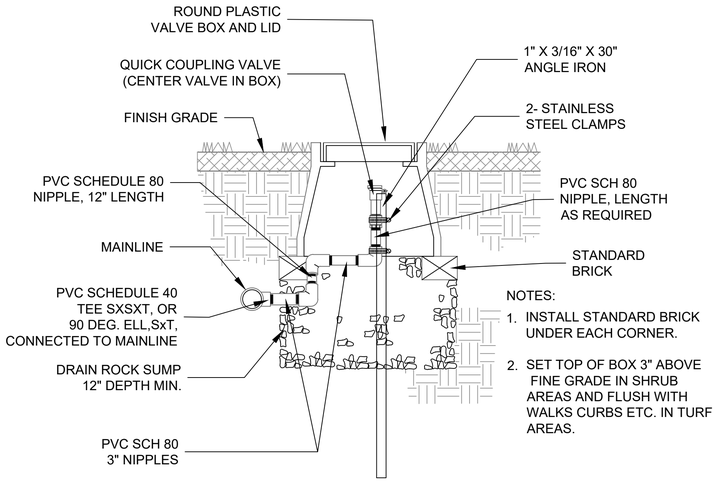

NOTES:
1. INSTALL STANDARD BRICK UNDER EACH CORNER.
2. SET TOP OF BOX 3" ABOVE FINE GRADE IN SHRUB AREAS AND FLUSH WITH WALKS CURBS ETC. IN TURF AREAS.

5 QUICK COUPLER VALVE

NOTES:

1. ALL VALVE BOXES AND LIDS TO BE GREEN PLASTIC.
2. CENTER VALVE BOX OVER EQUIPMENT ASSEMBLY TO FACILITATE SERVICING
3. SET BOX AND ASSEMBLY IN GROUNDCOVER/SHRUB AREA WHERE POSSIBLE.
4. SET BOXES PARALLEL TO EACH OTHER AND PERPENDICULAR TO EDGE.
5. AVOID HEAVY COMPACTION OF SOIL AROUND BOXES TO PREVENT DAMAGING VALVE BOX SIDES.
6. SET ALL BOXES FLUSH WITH WALKS, CURBS, ETC. IN ALL CASES.
7. SET BOXES WITH STANDARD BRICK UNDER EACH CORNER OR IN CASE OF ROUND BOX USE TWO BRICKS 180 DEGREES APART.
8. MAKE SURE ALL VALVE BOXES HAVE LOCKING BOLTS.
9. SEAL OPENINGS TO PREVENT ENTRANCE OF SOIL INTO BOXES.

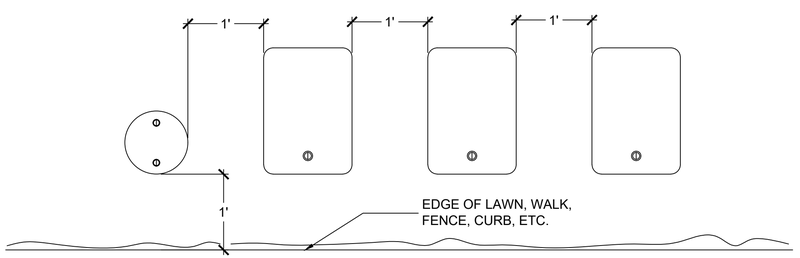

6 VALVE BOX LAYOUT

NOTES:
1. TOP OF HEAD TO BE FLUSH WITH SIDEWALK, CURB OR HEADERBOARD
2. ALL THREADED JOINTS TO RECEIVE TEFLON TAPE

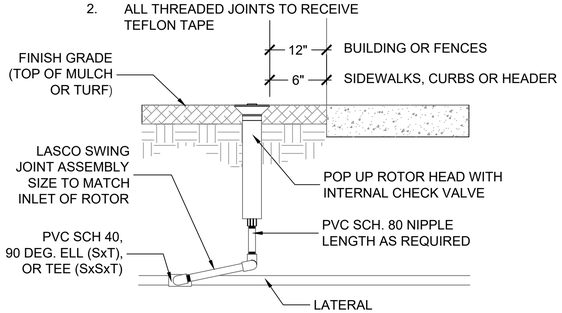

7 ROTOR IRRIGATION HEAD

NOTES:
1. ALL COPPER TO BE TYPE 'L'
2. PROVIDE SUPPORTS FOR 3" AND LARGER UNITS PER MANUFACTURERS SPECIFICATIONS

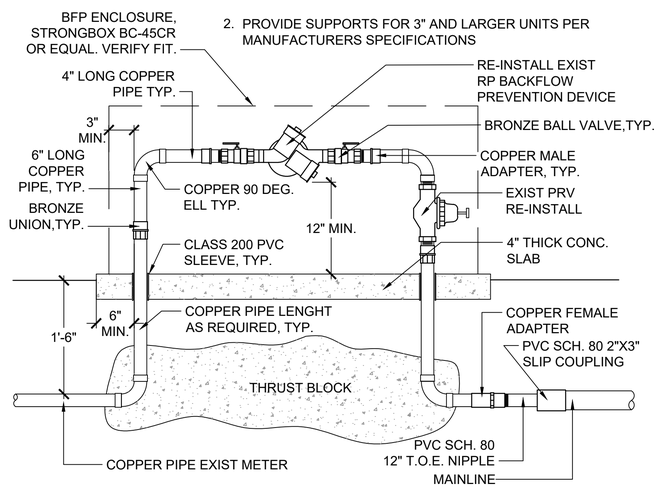

3 BACKFLOW PREVENTER RE-INSTALL

NOTES:
1. CONTRACTOR IS RESPONSIBLE FOR ALL PIPE, CONDUIT, FITTINGS, BOXES, WIRE AND SADDLES NECESSARY FOR INSTALLATION OF EQUIPMENT.
2. PROVIDE ADDITIONAL 3' MINIMUM OF 2-WIRE CABLE AT EACH DEVICE.

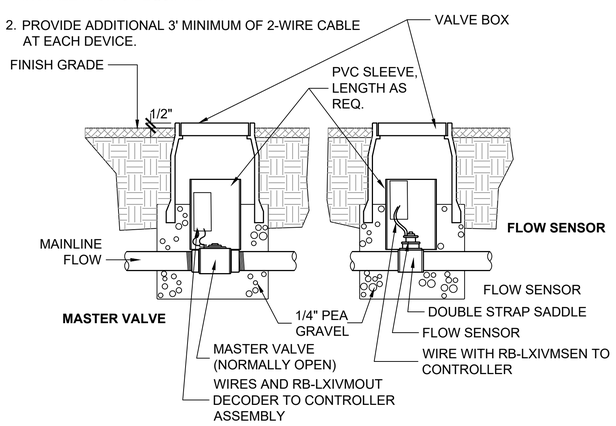

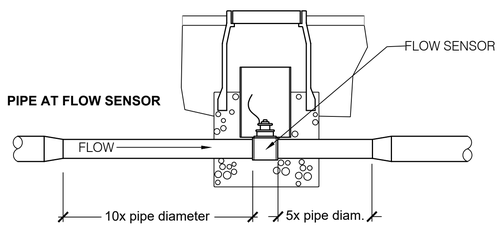

4 FLOW SENSOR - MASTER VALVE

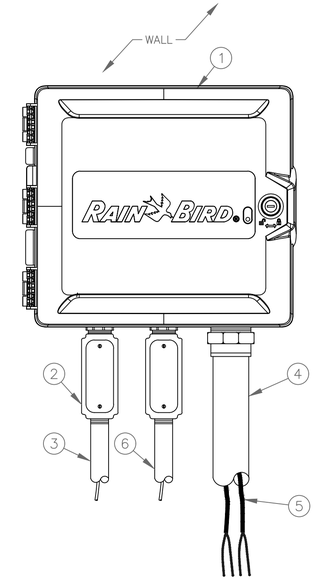

1. TWO-WIRE CONTROLLER: RAIN BIRD ESP-LXIVM/PRO IN PLASTIC CABINET WITH WALL MOUNT. INSTALL CONTROLLER AND CABINET ON WALL PER MANUFACTURER'S RECOMMENDATIONS.
2. JUNCTION BOX
3. 1-INCH CONDUIT AND FITTINGS FOR POWER SUPPLY WIRE
4. 2-INCH CONDUIT AND FITTINGS FOR TWO-WIRE CABLE
5. MAXICABLE TWO-WIRE PATH TO FIELD DEVICES USE A DIFFERENT CABLE JACKET COLOR FOR EACH PATH.
6. 1-INCH CONDUIT AND FITTINGS FOR GROUND WIRE. ONLY FOR OUTDOOR INSTALLATIONS.

NOTES:
1. USE STEEL CONDUIT FOR ABOVE GRADE AND SCH 40 PVC CONDUIT FOR BELOW GRADE CONDITIONS.
2. PROVIDE PROPER GROUNDING COMPONENTS TO ACHIEVE GROUND RESISTANCE OF 10 OHMS OR LESS. IF CONTROLLER IS MOUNTED INDOORS, USE POWER SUPPLY GROUND.

1 WALL MOUNT CONTROLLER (INTERIOR)

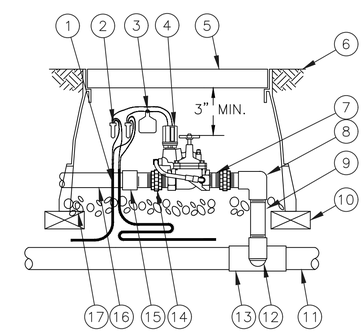

1. 30-INCH LENGTH OF 2-WIRE CABLE
2. WATERPROOF CONNECTION RAIN BIRD WC20 (TWO REQUIRED)
3. ID TAG: RAIN BIRD VID SERIES
4. REMOTE CONTROL VALVE: RAIN BIRD EFB-CP WITH IVM
5. VALVE BOX WITH COVER: RAIN BIRD VB-STD
6. FINISH GRADE/TOP OF MULCH
7. PVC SCH 80 NIPPLE (CLOSE)
8. PVC SCH 40 ELL
9. PVC SCH 80 NIPPLE (LENGTH AS REQUIRED)
10. BRICK (1 OF 4)
11. PVC MAINLINE PIPE
12. SCH 80 NIPPLE (2-INCH LENGTH, HIDDEN) AND SCH 40 ELL
13. PVC SCH 40 TEE OR ELL
14. PVC SCH 80 UNION, BOTH SIDES
15. PVC SCH 40 MALE ADAPTER
16. PVC LATERAL PIPE
17. 3-INCH MINIMUM DEPTH OF 3/4-INCH WASHED GRAVEL

2 REMOTE CONTROL VALVE WITH DECODER

abey arnold ASSOCIATES
LANDSCAPE ARCHITECTS

1005 A Street, Suite 305
San Rafael, California 94901

Phone 415-258-9580
Fax 415/258-9780

CA License #2616

Seal

LICENSED LANDSCAPE ARCHITECT
Signature
03/31/24
Renewal Date
06/22/2022
Date
STATE OF CALIFORNIA

Consultants

All drawings and written material appearing herein are the original unpublished work of Abey/Arnold Associates and may not be used or duplicated in any form without the written consent of Abey/Arnold Associates.

Project

Athletic Field Turf Renovation Project

Memorial Park

1000 Sir Francis Drake Blvd.
San Anselmo, CA 94960

Drawing Title

IRRIGATION DETAILS

Date: June 22, 2022

Job #: 2005

Revisions

Sheet Number

I-3

11 Of 12 Sheets

1. TWO-WIRE DECODER CONTROLLER: RAIN BIRD ESP-LXI CONTROLLER
2. TWO-WIRE TO ESP-LXI CONTROLLER
3. COMMUNICATION WIRE TO ESP-LXI CONTROLLER
4. SOLENOID VALVE OR MASTER VALVE
5. SOLENOID WIRE (1 OF 2)
6. DB SERIES WIRE CONNECTOR: RAIN BIRD DBTWC25 (1 OF 2)
7. FIELD DECODER: RAIN BIRD FD-101TURF M13011 DECODER
8. COMMUNICATION WIRE TO NEXT DEVICE (FIELD DECODER, SENSOR DECODER OR LINE SURGE PROTECTOR)
9. TWO-WIRE CABLE TO NEXT DEVICE (FIELD DECODER, SENSOR DECODER OR LINE SURGE PROTECTOR)

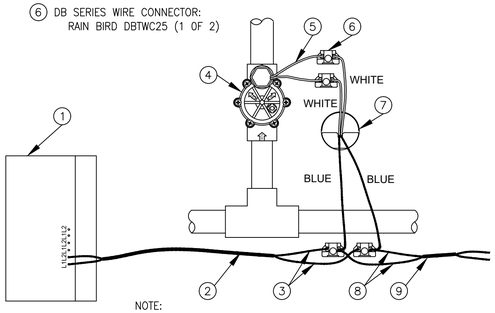

NOTE:
1. MAXIMUM LENGTH OF SECONDARY WIRE PATH (14 AWG) FROM FIELD DECODER TO SOLENOID IS 450 FEET.

5 DECODER TO EXISTING VALVE WIRING

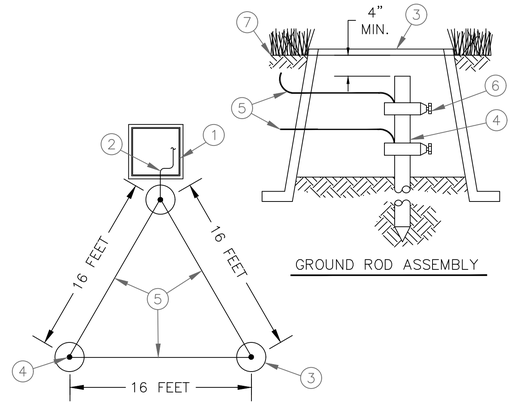

GROUND ROD ASSEMBLY

GROUND ROD LAYOUT

1. RAIN BIRD CONTROLLER
2. SOLID BARE COPPER WIRE (#10 AWG) FROM GROUNDING ROD TO CONTROLLER. MAKE WIRE AS SHORT AND STRAIGHT AS POSSIBLE
3. COVER GROUNDING ROD WITH 10-INCH ROUND VALVE BOX AS SHOWN
4. 5/8-INCH X 8 FT COPPER CLAD GROUNDING ROD OR GROUNDING PLATE. INSTALL RODS IN SOIL IN A TRIAGULAR PATTERN SPACED A MINIMUM OF 16 FT APART FROM EACH OTHER. GROUNDING GRID TO HAVE A RESISTANCE OF TEN (10) OHMS OR LESS
5. BARE COPPER WIRE (#10 AWG MIN.) BETWEEN GROUNDING RODS
6. GROUND ROD CLAMP OR WELDS
7. FINISH GRADE

3 GROUNDING ROD INSTALLATION AT CONTROLLER

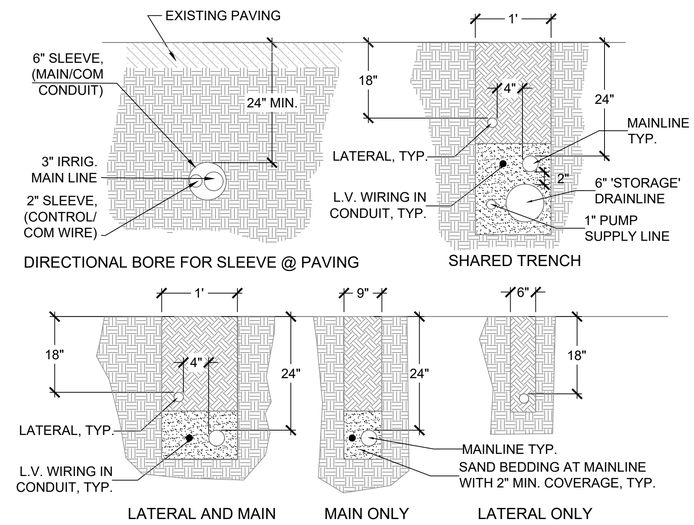

NOTES:

1. INSTALL 3" WIDE DETECTABLE WARNING TAPE 12" MIN. ABOVE MAINLINE.
2. SALVAGED EXCAVATED FILL COMPACTED TO ORIGINAL DENSITY IN ALL LANDSCAPED AREA, ALL OTHER AREAS SHALL BE AT 95% COMPACTION.
3. FOR ALL SLEEVES, 24" COVER MIN. PROVIDE 90ELL AT BOTH ENDS AND EXTEND CAPPED, SLEEVE DIAMETER PIPE TO SURFACE.
4. IN THE EVENT OF AN IRRIGATION LINE CONFLICTING WITH A DRAIN LINE, THE DRAIN LINE HAS PRIORITY. IF PROPER COVERAGE CANNOT BE ATTAINED ABOVE THE DRAIN LINES, THE IRRIGATION PIPES AND SLEEVES WILL BE INSTALLED BENEATH THE DRAIN LINE WITH 2" MIN. SEPARATION.

1 TRENCHING

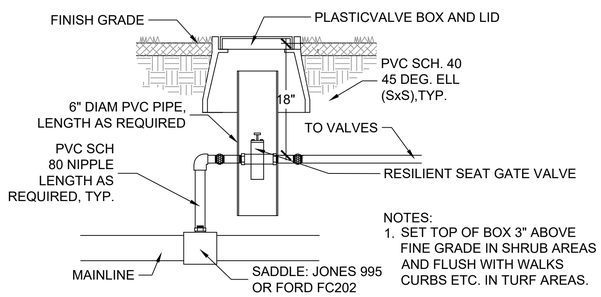

NOTES:
1. SET TOP OF BOX 3" ABOVE FINE GRADE IN SHRUB AREAS AND FLUSH WITH WALKS CURBS ETC. IN TURF AREAS.

6 ISOLATION VALVE

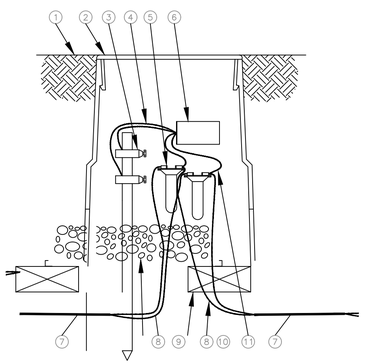

1. FINISH GRADE OR TOP OF MULCH
2. 10-INCH VALVE BOX WITH COVER: RAIN BIRD VB-10RND
3. GROUNDING ROD: 10 OHMS OR LESS
4. GREEN/YELLOW WIRE FROM LSP-1TURFTURF TO GROUNDING ROD BRASS CLAMPS (1 OF 2)
5. DB SERIES WIRE CONNECTOR: RAIN BIRD DBTWC25 (1 OF 2)
6. LINE SURGE PROTECTOR: RAIN BIRD LSP-1TURF M10008
7. TWO-WIRE CABLE TO NEXT DEVICE (FIELD DECODER, SENSOR DECODER, LINE SURGE PROTECTOR OR ESP-LXD CONTROLLER)
8. COMMUNICATION WIRE TO NEXT DEVICE (FIELD DECODER, SENSOR DECODER, LINE SURGE PROTECTOR OR ESP-LXD CONTROLLER)
9. 3-INCH MINIMUM DEPTH OF 3/4-INCH WASHED GRAVEL BRICK (1 OF 2)
10. BLUE WIRE FROM LSP-1TURF TO DB SERIES WIRE CONNECTOR
11.

NOTES:
1. LSP-1TURF SHOULD BE INSTALLED EVERY 500-FEET OR FOR EVERY EIGHT DECODERS ON TWO-WIRE PATH.
2. LSP-1TURF TO BE INSTALLED AT END OF WIRE RUN THAT TERMINATES IN THE FIELD (STAR CONFIGURATION).
3. RAIN BIRD FD-101TURF, FD-102TURF AND FD-202TURF REQUIRE SEPARATE LSP-1TURF PROTECTION.

4 GROUNDING, LSP-2TURF TO 2-WIRE CONNECTION

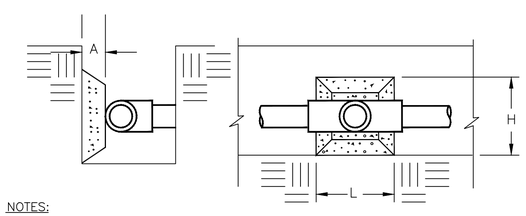

NOTES:

1. DISTANCE "A" TO BE 18" MINIMUM FROM FITTING TO UNDISTURBED SOIL. THRUST BLOCKS SHALL BE POURED ONLY AGAINST UNDISTURBED EARTH.
2. REFER TO THRUST BLOCK CHART FOR DISTANCE "L" AND "H".
3. CONCRETE TO BE SHAPED INTO A WEDGE WITH THE WIDE END AGAINST THE SOLID WALL OF THE TRENCH.
4. THRUST BLOCKING APPLIES TO GASKETED PIPE ONLY.
5. CONCRETE SHALL BE MIXED AND POURED IN ACCORDANCE WITH PIPE MANUFACTURER'S RECOMMENDED STANDARDS AND SPECIFICATIONS FOR THRUST BLOCKS.
6. CONCRETE SHALL BE KEPT BEHIND THE BELL OF THE FITTING WITH THE CONCRETE NOT PERMITTED TO RUN OVER AGAINST THE PIPE OR INTO THE JOINT.

PIPE SIZE	90deg BEND		45deg BEND			
	BEARING AREA (SQUARE FT.)	L x H	BEARING AREA (SQUARE FT.)	L x H	BEARING AREA (SQUARE FT.)	L x H
3"	1.0	13"x13"	.57	10"x10"	.74	11"x11"
4"	1.7	16"x16"	.93	12"x12"	1.2	14"x14"
6"	3.7	23"x23"	2.0	17"x17"	2.6	20"x20"
8"	6.6	30"x30"	3.5	23"x23"	4.6	26"x26"

THE FIGURES IN THIS CHART ARE BASED ON A WORKING PRESSURE OF 150 PSI.

2 THRUST BLOCKS

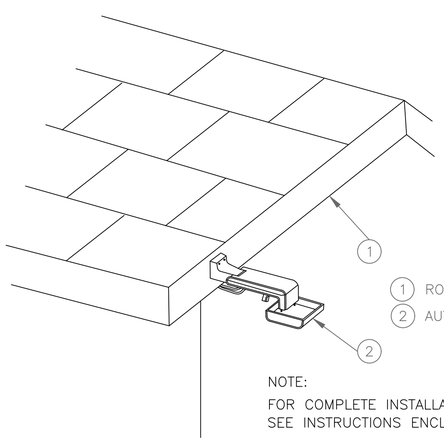

1. ROOF OR STRUCTURE EDGE
2. AUTOMATIC RAIN SHUTOFF: RAIN BIRD RAIN CHECK

NOTE:
FOR COMPLETE INSTALLATION INSTRUCTIONS, SEE INSTRUCTIONS ENCLOSED WITH RAIN CHECK.

7 RAIN SHUT OFF DEVICE

abey arnold ASSOCIATES
LANDSCAPE ARCHITECTS

1005 A Street, Suite 305
San Rafael, California 94901

Phone 415-258-9580
Fax 415/258-9780

CA License #2616

Seal

LICENSED LANDSCAPE ARCHITECT
Abey C. Arnold 4330
Signature
03/31/24
Renewal Date
06/22/2022
Date
STATE OF CALIFORNIA

Consultants

All drawings and written material appearing herein are the original unpublished work of Abey/Arnold Associates and may not be used or duplicated in any form without the written consent of Abey/Arnold Associates.

Project

Athletic Field Turf Renovation Project

Memorial Park

1000 Sir Francis Drake Blvd.
San Anselmo, CA 94960

Drawing Title

IRRIGATION DETAILS

Date: June 22, 2022

Job #: 2005

Revisions

Sheet Number

I-4

12 Of 12 Sheets

TOWN OF SAN ANSELMO

DEPARTMENT OF PUBLIC WORKS

BID BOOK

FOR

2022
MEMORIAL PARK
ATHLETIC FIELD RENOVATION PROJECT

IN

SAN ANSELMO CALIFORNIA

For use in Connection with the project Plans, Special Provisions, Standard Specifications and Standard Plans of the California Department of Transportation dated 2010, the Revised Standard Specifications of the California Department of Transportation dated **May 31, 2018,** the Labor Surcharge and Equipment Rental Rates in effect on the date the work is accomplished, and the 2008 Marin Uniform Construction Standards.

Contract No. MPTR-2022

Bid Opening Date: August 4, 2022, 10:00 A.M.

TABLE OF CONTENTS

TABLE OF CONTENTS BB-1

INSTRUCTIONS TO BIDDERS BB-2

BID FORMS BB-4
BID BB-4
SCHEDULE OF BID ITEMS BB-7
LIST OF SUBCONTRACTORS BB-15
DEBARRED CONTRACTORS LIST BB-16
PUBLIC CONTRACT CODE (Statements, Questionnaire and Noncollusion Declaration) BB-17
Worker's compensation Certification BB-20
EXPERIENCE AND FINANCIAL QUALIFICATIONS BB-21
DEBARMENT AND SUSPENSION CERTIFICATION BB-23
FIELD REVIEW CERTIFICATION BB-24
CONTRACTOR'S LICENSE REQUIREMENT DECLARATION (Section 7028.15) BB-25
BIDDER'S BOND BB-27

APPENDICES

APPENDIX A- Sample Contract Forms C-1
SAMPLE CONTRACT AGREEMENT C-2
SAMPLE PAYMENT BOND C-4
SAMPLE PERFORMANCE BOND C-5
SAMPLE ESCROW AGREEMENT FOR SECURITY DEPOSIT IN LIEU OF RETENTION C-6
SAMPLE DEFECTIVE MATERIALS AND WORKMANSHIP BOND C-8
SAMPLE GUARANTEE C-9

INSTRUCTIONS TO BIDDERS

1. INTERPRETATION OR CORRECTION OF CONTRACT DOCUMENTS

a. Bidder shall, before submitting its Bid, carefully study and compare the components of the Contract Documents and shall examine the Project Site, the conditions under which the Work is to be performed, and the local conditions.

b. In the event Bidder has any question as to the meaning of any part of the Contract Documents, or Bidder finds any error, omission, inconsistency, or ambiguity in the Contract Documents, Bidder shall make a written Request for Clarification prior to submitting its Bid. Requests for clarification or interpretation of the Contract Documents shall be addressed only to the Engineer designated in the Notice to Contractors. It shall be the Bidder's responsibility to ensure that any such request is submitted to the Town in a timely manner to allow sufficient time for the Town to issue a written Addendum.

c. If necessary, the Town shall make clarifications, interpretations, corrections, and changes to the Contract Documents by Addenda issued as provided in Section 2 of these Instructions to Bidders, below. Purported clarifications, interpretations, corrections, and changes to the Contract Documents made in any other manner shall not be binding on the Town, and Bidders shall not rely upon them.

2. ADDENDA

a. Addenda will only be issued in writing. The Town will make reasonable efforts to deliver (via email or U.S. Mail) Addenda to all Bidders who are known by the Town to have received a complete set of Contract Documents and who have provided an email address and a street address for receipt of Addenda.

b. Each Bidder shall be responsible for ascertaining, prior to submitting its Bid, that it has received all issued Addenda. Town makes no guarantee that all Bidders will receive all Addenda. Copies of Addenda will be made available for inspection at the office where Contract Documents are on file for inspection, as indicated on the Notice to Contractors.

c. Addenda withdrawing the Notice to Contractors or postponing the Bid Deadline may be issued any time prior to the Bid Deadline. However, if any Addenda result in a material change (addition or deletion) to the Contract Documents, the Bid Deadline shall be extended by the Town by not less than 72 hours, pursuant to California Public Contract Code section 4104.5.

d. Each Bidder shall acknowledge receipt of all Addenda on the Bid. Failure to acknowledge receipt of Addenda may render the bid non-responsive.

3. FILLING IN BID BOOK BY BIDDERS

a. The portion of the Contract Documents entitled "Bidding Documents" (including the Notice to Bidder, the Instructions to Bidders, the Bid and the Bid Forms) focuses the Bidder's attention on the requirements for submitting a bid.

b. Bids shall be submitted on the Bid Forms included within the Bid Book. A complete Bid Book, with all Bid Forms, must be submitted.

c. All blanks on the Bid Forms shall be filled in by typewriter or printed legibly in black ink.

d. Interlineations, alterations, and erasures must be individually initialed by the Bidder.

e. Bidder shall not modify or qualify the Bid Book in any manner.

f. The Bid Forms shall be signed by a person or persons legally authorized to bind Bidder to the Contract. The individuals signing each document shall warrant that they are authorized to bind the legal entity of the Bidder.

4. SUBMITTING BID

All Bids shall be submitted as directed in the Special Provisions.

(DO NOT DETACH)

BID TO THE TOWN OF SAN ANSELMO

DEPARTMENT OF PUBLIC WORKS

FOR PROJECT KNOWS AS: MEMORIAL PARK ATHLETIC FIELD RENOVATION PROJECT

CONTRACT NO. MPTR-2022

NAME OF BIDDER _____

BUSINESS P.O. BOX _____

CITY, STATE, ZIP _____

BUSINESS STREET ADDRESS _____
(Please include even if P.O. Box used)

CITY, STATE, ZIP _____

TELEPHONE NO: **AREA CODE ( )** _____

FAX NO: **AREA CODE ( )** _____

CONTRACTOR LICENSE NO. _____

DATE OF BID: _____

The work to be performed under this Contract consists of, but is not limited to: clearing and grubbing, irrigation and landscape planting, drainage, water pollution control, and ancillary work in Memorial Park in San Anselmo, CA.

The work for which this bid is submitted is for construction in conformance with the Bid Book, (including the payment of not less than the State general prevailing wage rates), the Project Plans and Special Provisions described below, including any addenda thereto, the Contract Agreement annexed hereto, and also in conformance with the California Department of Transportation Standard Plans, dated **2018**, the California Department of Transportation Standard Specifications, dated **2018**, the California Department of Transportation Revised Standard Specifications, dated May 31, 2018, the Labor Surcharge and Equipment Rental Rates in effect on the date the work is accomplished, the 2008 Marin Uniform Construction Standards, and documents included in the specifications by reference.

The work shall conform to the requirements of the Contract Documents as presented and/or referenced in the documents dated June 28, 2022 and entitled:

TOWN OF SAN ANSELMO
MEMORIAL PARK ATHLETIC FIELD RENOVATION PROJECT
BID BOOK

And

TOWN OF SAN ANSELMO
MEMORIAL PARK ATHLETIC FIELD RENOVATION PROJECT
SPECIAL PROVISIONS

The project plans for the work to be done were approved June 28, 2022 and are entitled:

MEMORIAL PARK ATHLETIC FIELD RENOVATION PROJECT
TOWN OF SAN ANSELMO

Bids are to be submitted for the entire work. The amount of the bid for comparison purposes will be the total of all items in the **Base Bid**.

The bidder shall set forth for each unit basis item of work a unit price and a total for the item, and for each lump sum item a total for the item, all in clearly legible figures in the respective spaces provided for that purpose. In the case of unit basis items, the amount set forth under the "Item Total" column shall be the product of the unit price bid and the estimated quantity for the item.

In case of discrepancy between the unit price and the total set forth for a unit basis item, the unit price shall prevail, except as provided in (a) or (b), as follows:

(a) If the amount set forth as a unit price is unreadable or otherwise unclear, or is omitted, or is the same as the amount as the entry in the item total column, then the amount set forth in the item total column for the item shall prevail and shall be divided by the estimated quantity for the item and the price thus obtained shall be the unit price;

(b) (Decimal Errors) If the product of the entered unit price and the estimated quantity is exactly off by a factor of ten, one hundred, etc., or one-tenth, or one-hundredth, etc. from the entered total, the discrepancy will be resolved by using the entered unit price or item total, whichever most closely approximates percentage-wise the unit price or item total in the *TOWN OF SAN ANSELMO*'s Final Estimate of cost.

If both the unit price and the item total are unreadable or otherwise unclear, or are omitted, the bid may be deemed irregular. Likewise if the item total for a lump sum item is unreadable or otherwise unclear, or is omitted, the bid may be deemed irregular unless the project being bid has only a single item and a clear, readable total bid is provided.

Symbols such as commas and dollar signs will be ignored and have no mathematical significance in establishing any unit price or item total or lump sums. Written unit prices, item totals and lump sums will be interpreted according to the number of digits and, if applicable, decimal placement. Cents symbols also have no significance in establishing any unit price or item total since all figures are assumed to be expressed in dollars and/or decimal fractions of a dollar. Bids on lump sum items shall be item totals only; if any unit price for a lump sum item is included in a bid and it differs from the item total, the items total shall prevail.

The foregoing provisions for the resolution of specific irregularities cannot be so comprehensive as to cover every omission, inconsistency, error or other irregularity that may occur in a bid. Any situation not specifically provided for will be determined in the discretion of the *TOWN OF SAN ANSELMO*, and that discretion will be exercised in the manner deemed by the *TOWN OF SAN ANSELMO* to best protect the public interest in the prompt and economical completion of the work. The decision of the *TOWN OF SAN ANSELMO* respecting the amount of a bid, or the existence or treatment of an irregularity in a bid, shall be final.

The quantities of work under each item are approximate only, being given for a basis of comparison of Bids, and the right is reserved to the Town to increase or decrease the amount of work under any item as may be required, in accordance with provisions set forth in the specifications for this project.

The total amount of money set forth for each item of work or as the total amount bid for the project does not constitute an agreement to pay a lump sum for the work unless it specifically so states.

If this bid shall be accepted and the undersigned shall fail to enter into the contract and furnish all bonds in the sums required by the State Contract Act, with surety satisfactory to the *TOWN OF SAN ANSELMO*, within 10 days, not including Saturdays, Sundays and legal holidays, after the bidder has received notice from the *TOWN OF SAN ANSELMO* that the contract has been awarded, the *TOWN OF SAN ANSELMO* may, at its option, determine that the bidder has abandoned the contract, and thereupon this bid and the acceptance thereof shall be null and void and the forfeiture of the security accompanying this bid shall operate and the same shall be the property of the *TOWN OF SAN ANSELMO* .

The work site will become available to the Contractor on Tuesday September 6, 2022, which will be the first official work day. The time period between Award of Contract and September 6, 2022 will not be counted towards the working days for the project.

The undersigned, as bidder, declares that the only persons or parties interested in this bid as principals are those named herein; that this bid is made without collusion with any other person, firm, or corporation; that he has carefully examined the location of the proposed work, the annexed proposed form of contract, and the plans and specifications therein referred to; and he proposes, and agrees if this bid is accepted, that he will contract with the *TOWN OF SAN ANSELMO*, in the form of the copy of the contract annexed hereto, to provide all necessary machinery, tools, apparatus and other means of construction, and to do all the work and furnish all the materials specified in the contract, in the manner and time therein prescribed, and according to the requirements of the *TOWN OF SAN ANSELMO* as therein set forth, and that he will take in full payment for the following prices:

TOWN OF SAN ANSELMO
SCHEDULE OF BID ITEMS 'BID LIST'
MEMORIAL PARK ATHLETIC FIELD RENOVATION PROJECT

BASE BID

NO.	ITEM	UNIT OF MEASURE	ESTIMATED QUANTITY	UNIT PRICE (IN FIGURES)	ITEM TOTAL (IN FIGURES)
1	MOBILIZATION/TEMPORARY FENCE/SWPPP/STAKING/TREE PROTECTION	LS	1		
2	DEMOLITION (TURF TILLED & DEBRIS REMOVED)	LS	1		
3	ROUGH GRADING	LS	1		
4	NEW DRAIN BOX & GRATE COVER (ALDERNEY AND FIELD 2)	LS	1		
5	8" DIA. DRAINAGE LATERALS (2 TOTAL – APPROX. 78 LF, INCLUDING TIE-INS TO EXISTING STORM DRAIN	LS	1		
6	SAWCUT, TRENCH, REPAIR PAVING FOR DRAIN LINE	LS	1		
7	WELL SUPPLY PIPE (1.5" DIA.), ELECTRICAL CONDUIT (1" DIA.) APPROX. 475 LF	LS	1		
8	6" DIA. STORAGE PIPE, APPROX. 950 LF INCLUDING BACKFILL, CLEAN OUTS (3 EA) AND JUNCTION BOXES (3 EA)	LS	1		
9	4" DIA. INFIELD/BACKSTOP SUBDRAINS (APPROX. 835 LF)	LS	1		
10	4" DIA. MAIN FIELD SUBDRAIN – APPROX. 330 LF PLUS 65 LF AT FIELD 3	LS	1		
11	CLEANOUTS (6 TOTAL)	LS	1		
12	6" SLEEVE INSTALLATION AT FIELD 2 – DIRECTIONAL BORING	LS	1		
13	SOIL PREP/FINE GRADING (APPROX. 141,730 SF)	LS	1		
14	INFIELD MIX REPAIR	CY	40		
15	INFIELD MIX (NEW)	SF	1,575		
16	INFIELD FINE GRADING (APPROX. 34,865 SF)	LS	1		
17	WOOD MULCH AT FIELD 3 SPECTATOR AREA (1,900 SF, 3" DEPTH)	LS	1		
18	WOOD HEADER AT RESTROOM, FIELD 3 DUGOUT AND SKATEPARK (APPROX 287 LF)	LS	1		
19	AC PAVING/GRADING AT RESTROOM, FIELD 1 AND PICNIC AREA, INCLUDING WOOD HEADER	LS	1		
20	SOD TURF (APPROX. 141,730 SF)	LS	1		
21	IRRIGATION SYSTEM (ALL INCLUSIVE)	LS	1		
22	90 DAY MAINTENANCE	LS	1		
			BASE BID		

The Bidder shall list the name and address of each and every subcontractor to whom the Bidder proposes to subcontract portions of the work, as required by the provisions in Section 2-1.33C "Subcontractor List" of the Standard Specifications. The bidder shall here give a complete description of the work to be performed by each subcontractor. If no subcontractor is listed for a portion of work, the contractor is required to self perform that portion of the work. (Public Contract Code § 4106).
.

LIST OF SUBCONTRACTORS

SUBCONTRACTORS AND ADDRESS	LICENSE NUMBER & CLASS, AND DIR REGISTRATION NUMBER	DESCRIPTION OF PORTION OF WORK TO BE SUBCONTRACTED

NO SUBSITITUTIONS OR ADDITIONS MAY BE MADE WITHOUT PRIOR WRITTEN APPROVAL

SUBCONTRACTS

Pursuant to the provisions in Section 1777.1 of the Labor Code, the Labor Commissioner publishes and distributes a list of contractors ineligible to perform work as a subcontractor on a public works project. This list of debarred contractors is available from the Department of Industrial Relations web site at http://www.dir.ca.gov/dir/Labor-law/DLSE/Debar.html.

No contractor or subcontractor may be listed on a bid proposal for a public works project (submitted on or after March 1, 2015) unless registered with the Department of Industrial Relations (DIR) pursuant to Labor Code section 1725.5 [with limited exceptions from this requirement for bid purposes only under Labor Code section 1771.1(a)].

Public Contract Code Section 10285.1 Statement

In conformance with Public Contract Code Section 10285.1 (Chapter 376 §1, Stats. 1985), the bidder hereby declares

under penalty of perjury under the laws of the State of California that the bidder has ___ , has not ___been convicted

within the preceding three years of any offenses referred to in that section, including any charge of fraud, bribery, collusion, conspiracy, or any other act in violation of any state or Federal antitrust law in connection with the bidding upon, award of, or performance of, any public works contract, as defined in Public Contract Code Section 1101, with any public entity, as defined in Public Contract Code Section 1100, including the Regents of the University of California or the Trustees of the California State University. The term "bidder" is understood to include any partner, member, officer, director, responsible managing officer, or responsible managing employee thereof, as referred to in Section 10285.1.

Note: The bidder must place a check mark after "has" or "has not" in one of the blank spaces provided. The above Statement is part of the Bid. Signing this Bid on the signature portion thereof shall also constitute signature of this Statement. Bidders are cautioned that making a false certification may subject the certifier to criminal prosecution.

Public Contract Code Section 10162 Questionnaire

In conformance with Public Contract Code Section 10162, the Bidder shall complete, under penalty of perjury, the following questionnaire:

Has the bidder, any officer of the bidder, or any employee of the bidder who has a proprietary interest in the bidder, ever been disqualified, removed, or otherwise prevented from bidding on, or completing a federal, state, or local government project because of a violation of law or a safety regulation?

Yes _____ No _____

If the answer is yes, explain the circumstances in the following space:

Public Contract Code 10232 Statement

In conformance with Public Contract Code Section 10232, the Contractor, hereby states under penalty of perjury, that no more than one final unappealable finding of contempt of court by a federal court has been issued against the Contractor within the immediately preceding two year period because of the Contractor's failure to comply with an order of a federal court which orders the Contractor to comply with an order of the National Labor Relations Board.

Note: The above Statement and Questionnaire are part of the Bid. Signing this Bid on the signature portion thereof shall also constitute signature of this Statement and Questionnaire.
Bidders are cautioned that making a false certification may subject the certifier to criminal prosecution.

NONCOLLUSION DECLARATION TO BE EXECUTED BY BIDDER AND SUBMITTED WITH BID

The undersigned declares:

I am the _____ of _____, the party making the foregoing bid.

The bid is not made in the interest of, or on behalf of, any undisclosed person, partnership, company, association, organization, or corporation. The bid is genuine and not collusive or sham. The bidder has not directly or indirectly induced or solicited any other bidder to put in a false or sham bid. The bidder has not directly or indirectly colluded, conspired, connived, or agreed with any bidder or anyone else to put in a sham bid, or to refrain from bidding. The bidder has not in any manner, directly or indirectly, sought by agreement, communication, or conference with anyone to fix the bid price of the bidder or any other bidder, or to fix any overhead, profit, or cost element of the bid price, or of that of any other bidder. All statements contained in the bid are true. The bidder has not, directly or indirectly, submitted his or her bid price or any breakdown thereof, or the contents thereof, or divulged information or data relative thereto, to any corporation, partnership, company association, organization, bid depository, or to any member or agent thereof to effectuate a collusive or sham bid, and has not paid, and will not pay, any person or entity for such purpose.

Any person executing this declaration on behalf of a bidder that is a corporation, partnership, joint venture, limited liability company, limited liability partnership, or any other entity, hereby represents that he or she has full power to execute, and does execute, this declaration on behalf of the bidder.

I declare under penalty of perjury under the laws of the State of California that the foregoing is true and correct and that this declaration is executed on _____[date], at _____[city], _____[state]."

(California Public Contract Code § 7106; 23 U.S. Code § 112).

Note: The above Noncollusion Declaration is part of the Bid. Signing this Bid on the signature portion thereof shall also constitute signature of this Noncollusion Declaration. Bidders are cautioned that making a false certification may subject the certifier to criminal prosecution.

WORKER'S COMPENSATION CERTIFICATION

I am aware of the provisions of Section 3700 of the Labor Code which require every employer to be insured against liability for workers' compensation or to undertake self-insurance in accordance with the provisions of that code, and I will comply with such provisions before commencing the performance of the work of this contract.

_____

Signature of Contractor Date

_____

Printed Name

EXPERIENCE AND FINANCIAL QUALIFICATIONS

The following statement as to experience and financial qualifications of the Bidder are submitted in conjunction with the bid, as a part thereof and the truthfulness and accuracy of the information is guaranteed by the bidder.

The Bidder has been engaged in the contracting business under the present business name for _____ years. Experience in work of a nature similar to that covered in the bid extends over a period of__ years.

The Bidder currently holds a valid Contractor's License of the following Class or Classes,_____ _____ issued by the Contractor's License Board under the provision of Chapter 9 of Division 3 of the Business and Professions Code of the State of California.

The Bidder, as a contractor, has never failed to satisfactorily complete a contract awarded to him, except as follows: (Name any and all exceptions and reasons therefor).

_____

_____

_____

_____

<u>In the last 10 years, have you or your firm been a party to arbitration, lawsuit or any other proceeding</u> involving work that you or your firm performed? yes____ no_____

If so, please provide the following information as to each such proceeding:

(I) the name, address and telephone numbers of all parties to the proceeding;

(II) the general nature of the claims being made against or by your firm;

(III) the outcome of the proceeding.

Have you or your firm ever requested payment of more money than any of your clients have been willing to pay? yes____ no_____

As to each such request, please state:

(I) the name, address and telephone number of the client;

(II) the amount and nature of your claim;

(III) the nature of the client's position;

(IV) the outcome of your claim.

The following contracts have been satisfactorily completed in the last three years for the person, or authority indicated, and to whom reference is made. (Name five contracts.)

The following is a list of plant and equipment owned by the Bidder, and which is definitely available for use on the proposed work as required.

Quantity	Name, Type & Capacity	Condition	Location

DEBARMENT AND SUSPENSION CERTIFICATION

TITLE 2, CODE OF FEDERAL REGULATIONS, PART 1200

The bidder, under penalty of perjury, certifies that, except as noted below, he/she or any other person associated therewith in the capacity of owner, partner, director, officer, manager:

- is not currently under suspension, debarment, voluntary exclusion, or determination of ineligibility by any Federal agency;
- has not been suspended, debarred, voluntarily excluded or determined ineligible by any Federal agency within the past 3 years;
- does not have a proposed debarment pending; and
- has not been indicted, convicted, or had a civil judgment rendered against it by a court of competent jurisdiction in any matter involving fraud or official misconduct within the past 3 years.

If there are any exceptions to this certification, insert the exceptions in the following space.

Exceptions will not necessarily result in denial of award, but will be considered in determining bidder responsibility. For any exception noted above, indicate below to whom it applies, initiating agency, and dates of action.

Notes: Providing false information may result in criminal prosecution or administrative sanctions. The above certification is part of the Bid. Signing this Bid on the signature portion thereof shall also constitute signature of this Certification.

CONTRACTOR FIELD REVIEW CERTIFICATION PRIOR TO BID

We _____ (Contractor's name), have inspected the locations of all proposed work included in the "**MEMORIAL PARK ATHLETIC FIELD RENOVATION PROJECT**" and have determined all the field conditions and obstructions and are bidding accordingly.

NAME:_____

SIGNATURE:_____

TITLE:_____

DATE:_____

CONTRACTOR'S LICENSE REQUIREMENT

Section 7028.15 of the Business and Professions Code provides that it is a misdemeanor for any person to submit a bid to a public agency in order to engage in the business or act in the capacity of a contractor within the state without having a license therefor except in certain cases. Therefore you must sign one of the following two statements:

1. I am familiar with the provisions of Section 7028.15 of the California Business and Professions Code in my opinion the following exceptions contained within the Code section apply:

I declare under penalty of perjury that the foregoing is true and correct. Executed this____ day of _____, 20__, at,_____California.

_____

(Signature)

2. I am a licensed contractor possessing the following license_____, the number of which is,_____, the license expiration date is_____.

I declare under penalty of perjury that the foregoing is true and correct. Executed this ___day of_____, 20__, at _____California.

_____

(Signature)

ANY BID NOT CONTAINING THE FOREGOING INFORMATION OR A BID CONTAINING INFORMATION WHICH IS SUBSEQUENTLY PROVEN FALSE SHALL BE CONSIDERED NON-RESPONSIVE AND SHALL BE REJECTED BY THE PUBLIC AGENCY.

BID (Continued)

Accompanying this Bid is_____

(NOTICE: INSERT THE WORDS "CASH($ _____)," "CASHIER'S CHECK," "CERTIFIED CHECK," OR "BIDDER'S BOND," AS THE CASE MAY BE.)

in amount equal to at least ten percent of the total of the bid.

The names of all persons interested in the foregoing BID as principals are as follows:

IMPORTANT NOTICE

If bidder or other interested person is a corporation, state legal name of corporation, also names of the president, secretary, treasurer, and manager thereof; if a co-partnership, state true name of firm, also names of all individual copartners composing firm; if bidder or other interested person is an individual, state first and last names in full.

_____

_____

_____

_____

Licensed in conformance with an act providing for the registration of Contractors,

License No._____ Classification(s) _____

ADDENDA - This Bid is submitted with respect to the changes to the contract included in addenda number/s _____

(*Fill in addenda numbers if addenda have been received and insert, in this Bid, any Engineer's Estimate sheets that were received as part of the addenda*.)

By my signature on this Bid I certify, under penalty of perjury under the laws of the State of California, that the foregoing questionnaire and statements of Public Contract Code Sections 10162, 10232 and 10285.1 are true and correct and that the Bidder has complied with the requirements of Section 11102 of the Fair Employment and Housing Commission Regulations (Title 2, Div. 4.1 of the California Code of Regulations). By my signature on this Bid I further certify, under penalty of perjury under the laws of the State of California and the United States of America, that the Noncollusion Declaration required by Title 23 United States Code, Section 112 and Public Contract Code Section 7106 are true and correct.

Date:_____

_____

_____

_____

Signature and Title of Bidder

Business Address_____

Place of Business_____

Place of Residence_____

TOWN OF SAN ANSELMO
DEPARTMENT OF PUBLIC WORKS

BIDDER'S BOND

We, _____

_____ as Principal, and

_____

as Surety are bound unto the *TOWN OF SAN ANSELMO*, State of California, hereafter referred to as "Obligee", in the penal sum of ten percent (10%) of the total amount of the bid of the Principal submitted to the Obligee for the work described below, for the payment of which sum we bind ourselves, jointly and severally,

THE CONDITION OF THIS OBLIGATION IS SUCH, THAT:

WHEREAS, the Principal is submitted to the Obligee, for the work performed under the contract consisting of, but not limited to: clearing and grubbing, irrigation and landscape planting, drainage, water pollution control, and ancillary work in Memorial Park in San Anselmo, CA, for which bids are to be opened at the **Town of San Anselmo Council Chambers, 525 San Anselmo Ave, San Anselmo, California** on **August 4, 2022.**

NOW, THEREFORE, if the Principal is awarded the contract and, within the time and manner required under the specifications, after the prescribed forms are presented to him for signature, enters into a written contract, in the prescribed form, in conformance with the bid, and files two bonds with the Obligee, one to guarantee faithful performance of the contract and the other to guarantee payment for labor and materials as provided by law, then this obligation shall be null and void; otherwise, it shall remain in full force.

In the event suit is brought upon this bond by the Obligee and judgment is recovered, the Surety shall pay all costs incurred by the Obligee in such suit, including a reasonable attorney's fee to be fixed by the court.

Dated: _____ , 20____ .

_____

_____

_____
Principal

_____
Surety

By_____
Attorney-in-fact

CERTIFICATE OF ACKNOWLEDGEMENT

State of California
City/County of _____ SS

On this _____ day of _____ in the year 20__ before me

_____ , personally appeared _____ ,
Attorney-in-fact

who proved to me on the basis of satisfactory evidence to be the person whose name is subscribed to the within instrument and acknowledged to me that she executed the same in her authorized capacity, and that by her/his signature on the instrument the person, or entity upon behalf of which the person acted, executed the instrument.

I certify under PENALTY OF PERJURY under the laws of the State of California that the foregoing paragraph is true and correct.

(SEAL) _____
Notary Public

SAMPLE CONTRACT FORMS

CONTRACT SUBMITTAL

All of the following documents shall be submitted by the successful bidder within 10 calendar days after the Notice of Award is mailed by the Town.

Contract Agreement

Payment Bond

Performance Bond

Escrow Agreement for Security Deposits in Lieu of Retention (Sample Form to be used if requested by Contractor)

Workers' Compensation Certification

WARRANTY SUBMITTAL

All of the following documents shall be submitted by the Contractor within 10 business days after the Final Estimate is mailed by the Town.

Guarantee

Defective Materials and Workmanship Bond

TOWN OF SAN ANSELMO

Contract Agreement for

MEMORIAL PARK ATHLETIC FIELD RENOVATION PROJECT

Project No. MPTR-2022

This Agreement is made and entered into this ___ day of _____ 20__ by and between the Town of San Anselmo (hereinafter called Town) and _____ (**Insert Contractor Name)** (hereinafter called Contractor). Witnesseth, that the Town and the Contractor, for the considerations hereinafter named, agree as follows:

I - Scope of the Work

The Contractor hereby agrees to furnish all of the resources and activities, materials, equipment and labor necessary, and to complete all of the work shown on the plans and described in the specifications for the project entitled: **MEMORIAL PARK ATHLETIC FIELD RENOVATION Project No. MPTR-2022**, all in accordance with the requirements and provisions of the Contract Documents as defined in the Special Provisions which are hereby made a part of this Agreement. The liability insurance provided to Town by Contractor under this contract shall be primary and excess of any other insurance available to the Town.

II- Time of Completion

(a) The contract shall be signed by the successful bidder and returned, together with the contract bonds, copy of insurance policies, and Certificates of Insurance, with documents to verify any self-insurance coverage within **ten (10) working days** from the date the Notice of Award is mailed by the Town to the Contractor.

(b) The work to be performed under this Contract shall be commenced within **fifteen (15) calendar days** after the date of written notice that the Contract has been fully executed.

(c) The first working day shall be Tuesday September 6, 2022.

(d) The work shall be completed within **ninety (90) working days** counting from and after the fifteenth (15) calendar days from the date the Notice of Award is mailed by the Town to the Contractor, or from and after the first day of work, whichever occurs first, and with such extensions of time as are provided for in the Special Provisions.

III – Workers' Compensation

The Contractor hereby certifies that before commencing performance of the work of this Contract, it will comply with the provisions of California Labor Code Sections 3700, et seq., which require every employer to be insured against liability for workers' compensation or to undertake self insurance in conformance with the law.

IV - The Contract Sum

The Town shall pay to the Contractor for the performance of the Contract the amounts determined for the total number of each of the units of work in the attached Schedule of Bid Items completed at the unit price stated.

SAMPLE

The number of units contained in this schedule is approximate only, and the final payment shall be made for the actual number of units that are incorporated in or made necessary by the work covered by the Contract.

IN WITNESS WHEREOF, Town and Contractor have caused their authorized representatives to execute this Agreement the day and year first written above.

TOWN OF SAN ANSELMO:

David Donery, Town Manager

ATTEST:

Robyn Clifford, Acting Town Clerk

APPROVED AS TO FORM:

Megan H. Acevedo, Town Attorney

CONTRACTOR:

By: INFORMATION ONLY (NOT TO BE SUBMITTED WITH BID)

Printed Name:

Title:

License Number:

Federal Employer ID Number:

SAMPLE

TOWN OF SAN ANSELMO
DEPARTMENT OF PUBLIC WORKS

SAMPLE PAYMENT BOND

(Section 9550, Civil Code)

WHEREAS, The *TOWN OF SAN ANSELMO* , acting by and through the Department of Public Works, hereafter referred to as "Obligee", has awarded to Contractor _____, hereafter designated as the "Principal", a contract for the work described as follows:

_____

AND WHEREAS, said Principal is required to furnish a bond in connection with said contract, to secure the payment of claims of laborers, mechanics, materialmen and other persons as provided by law.
NOW, THEREFORE, we the undersigned Principal and Surety are bound unto the Obligee in the sum of _____ dollars ($ _____), for which payment, we bind ourselves, jointly and severally.

THE CONDITION OF THIS OBLIGATION IS SUCH,

That if said Principal or its subcontractors shall fail to pay any of the persons named in Civil Code Section 9100, or amounts due under the Unemployment Insurance Code with respect to work or labor performed by such claimant, or any amounts required to be deducted, withheld, and paid over to the Franchise Tax Board for the wages of employees of the Principal and his subcontractors pursuant to the Revenue and Taxation Code, with respect to such work and labor, that the surety herein will pay for the same in an amount not exceeding the sum specified in this bond, otherwise the above obligation shall be void. In case suit is brought upon this bond, the surety will pay a reasonable attorney's fee to be fixed by the court.
This bond shall inure to the benefit of any of the persons named in Civil Code Section 9100 as to give a right of action to such persons or their assigns in any suit brought upon this bond.

Dated: _____, 20 ____

Correspondence or claims relating to this bond should be sent to the surety at the following address:

_____
_____
_____

_____
_____
_____
Principal

_____
Surety **(SEAL)**

_____
By : Attorney-in-Fact

NOTE: Signatures of those executing for the surety must be properly acknowledged.

CERTIFICATE OF ACKNOWLEDGEMENT

State of California
City / County of _____ SS

On this _____ day of _____ in the year 20 ___ before me _____,
personally appeared _____, who proved to me on the basis of
Attorney-in-fact
satisfactory evidence to be the person whose name is subscribed to the within instrument and acknowledged to me that she executed the same in her authorized capacity, and that by her/his signature on the instrument the person, or entity upon behalf of which the person acted, executed the instrument.

I certify under PENALTY OF PERJURY under the laws of the State of California that the foregoing paragraph is true and correct.

(SEAL)

_____
Notary Public

SAMPLE

TOWN OF SAN ANSELMO
DEPARTMENT OF PUBLIC WORKS

SAMPLE PERFORMANCE BOND

(To Accompany Contract)

Bond No. _____

WHEREAS, the *TOWN OF SAN ANSELMO*, acting by and through the Department of Public Works, has awarded to Contractor _____, hereafter designated as the "Contractor", a contract for the work described as follows:

_____

AND WHEREAS, the Contractor is required to furnish a bond in connection with said contract, guaranteeing the faithful performance thereof:

NOW, THEREFORE, we the undersigned Contractor and Surety are held firmly bound to the *TOWN OF SAN ANSELMO* in the sum of $ _____ dollars ($ _____), to be paid to said Town or its certain attorney, its successors and assigns: for which payment, well and truly to be made, we bind ourselves, our heirs, executors and administrators, successors or assigns, jointly and severally, firmly by these presents.

THE CONDITION OF THIS OBLIGATION IS SUCH,

That if the above bound Contractor, its heirs, executors, administrators, successors or assigns, shall in all things stand to and abide by, and well and truly keep and perform the covenants, conditions and agreements in the foregoing contract and any alteration thereof made as therein provided, on his or their part to be kept and performed at the time and in the manner therein specified, and in all respects according to their intent and meaning, and shall indemnify and save harmless the *TOWN OF SAN ANSELMO* , its officers and agents, as therein stipulated, then this obligation shall become and be null and void; otherwise it shall be and remain in full force and virtue.

IN WITNESS WHEREOF, We have hereunto set our hands and seals on this _____ day of _____, 20_____.

Correspondence or claims relating to this bond should be sent to the surety at the following address:

_____
_____
_____
_____

_____
Contractor

_____
Name of Surety **(SEAL)**

_____
By: Attorney-in-Fact

NOTE: Signatures of those executing for the surety must be properly acknowledged.

CERTIFICATE OF ACKNOWLEDGEMENT

State of California, City / County of _____ SS

On this _____ day of _____ in the year 20 ___ before me _____, a notary public in and for the City / County of _____, personally appeared _____, who proved to me on the basis of satisfactory evidence to be
Attorney-in-fact
the person whose name is subscribed to the within instrument and acknowledged to me that she executed the same in her authorized capacity, and that by her/his signature on the instrument the person, or entity upon behalf of which the person acted, executed the instrument.

I certify under PENALTY OF PERJURY under the laws of the State of California that the foregoing paragraph is true and correct.

(SEAL)

_____
Notary Public

SAMPLE

TOWN OF SAN ANSELMO

ESCROW AGREEMENT
FOR SECURITY DEPOSITS IN LIEU OF RETENTION

This Escrow Agreement is made and entered into by and between the Town of San Anselmo, whose address is 525 San Anselmo Avenue, San Anselmo CA 94960, hereinafter called "Owner," and _____whose address is _____ hereinafter called "Contractor" and _____ whose address is _____ hereinafter called "Escrow Agent."

For the consideration hereinafter set forth, the Owner, Contractor, and Escrow Agent agree as follows:

(1) Pursuant to Section 22300 of the Public Contract Code of the State of California, Contractor has the option to deposit securities with Escrow Agent as a substitute for retention earnings required to be withheld by Owner pursuant to the Contract Agreement entered into between the Owner and Contractor for _____ in the amount of _____ dated _____ (hereinafter referred to as the "Contract"). Alternatively, on written request of the Contractor, the Owner shall make payments of the retention earnings directly to the Escrow Agent. When the Contractor deposits the securities as a substitute for Contract earnings, the Escrow Agent shall notify the Owner within 10 days of the deposit. The market value of the securities at the time of the substitution shall be at least equal to the cash amount then required to be withheld as retention under the terms of the Contract between the Owner and Contractor. Securities shall be held in the name of _____, and shall designate the Contractor as the beneficial owner.

(2) The Owner shall make progress payments to the Contractor for those funds which otherwise would be withheld from progress payments pursuant to the Contract provisions, provided that the Escrow Agent holds securities in the form and amount specified above.

(3) When the Owner makes payment of retentions earned directly to the Escrow Agent, the Escrow Agent shall hold them for the benefit of the Contractor until the time that the escrow created under this contract is terminated. The Contractor may direct the investment of the payments into securities. All terms and conditions of this agreement and the rights and responsibilities of the parties shall be equally applicable and binding when the Owner pays the Escrow Agent directly.

(4) Contractor shall be responsible for paying all fees for the expenses incurred by Escrow Agent in administering the Escrow Account and all expenses of the Owner. These expenses and payment terms shall be determined by the Owner, Contractor, and Escrow Agent.

(5) The interest earned on the securities or the money market accounts held in escrow and all interest earned on that interest shall be for the sole account of Contractor and shall be subject to withdrawal by Contractor at any time and from time to time without notice to the Owner.

(6) Contractor shall have the right to withdraw all or any part of the principal in the Escrow Account only by written notice to Escrow Agent accompanied by written authorization from the Owner to the Escrow Agent that Owner consents to the withdrawal of the amount sought to be withdrawn by Contractor.

(7) The Owner shall have a right to draw upon the securities in the event of default by the Contractor. Upon seven days' written notice to the Escrow Agent from the owner of the default, the Escrow Agent shall immediately convert the securities to cash and shall distribute the cash as instructed by the Owner.

(8) Upon receipt of written notification from the Owner certifying that the Contract is final and complete, and that the Contractor has complied with all requirements and procedures applicable to the Contract, Escrow Agent shall release to Contractor all securities and interest on deposit less escrow fees and charges of the Escrow Account. The escrow shall be closed immediately upon disbursement of all moneys and securities on deposit and payments of fees and charges.

(9) Escrow Agent shall rely on the written notifications from the Owner and the Contractor pursuant to Sections (5) to (8), inclusive, of this Agreement and the Owner and Contractor shall hold Escrow Agent harmless from Escrow Agent's release and disbursement of the securities and interest as set forth above.

SAMPLE

(10) The names of the persons who are authorized to give written notice or to receive written notice on behalf of the Owner and on behalf of Contractor in connection with the foregoing, and exemplars of their respective signatures are as follows:

On behalf of Owner:	On behalf of Contractor:
_____	_____
Title	Title
_____	_____
Name	Name
_____	_____
Address	Address
_____	_____
Signature	Signature

On behalf of Escrow Agent:

_____
Title

_____
Name

_____
Signature

_____
Address

At the time the Escrow Account is opened, the Owner and Contractor shall deliver to the Escrow Agent a fully executed counterpart of this Agreement.

IN WITNESS WHEREOF, the parties have executed this Agreement by their proper officers on the date first set forth above.

Owner	Contractor
_____	_____
Title	Title
_____	_____
Name	Name
_____	_____
Signature	Signature

Attachment A – written consent from Contractor's surety.

SAMPLE

TOWN OF SAN ANSELMO

DEFECTIVE MATERIALS AND WORKMANSHIP BOND

MEMORIAL PARK ATHLETIC FIELD RENOVATION PROJECT

WHEREAS, the TOWN OF SAN ANSELMO ("Town") a municipal corporation located in the County of Marin, State of California, has entered into an agreement with _____, hereinafter designated as "Principal" whereby Principal agrees to complete the improvements more particularly described in all documents forming the complete contract entitled "MEMORIAL PARK ATHLETIC FIELD RENOVATION PROJECT" which said Contract Agreement is hereby referred to and made a part hereof; and

WHEREAS, said Principal is required to furnish a bond in connection and with said contract, to protect the Town against the results of defective materials or workmanship for a period of one (1) year after completion and acceptance.

NOW, THEREFORE, we the Principal and _____, as Surety, are held and firmly bound unto the TOWN OF SAN ANSELMO in the sum of $_____, lawful money of the United States, being not less than ten (10%) percent of the Final Estimate of the work, for the payment of which sum well and truly to be made, we bind ourselves, our heirs, executors, administrators and successors, jointly and severally, firmly by these present.

THE CONDITION OF THIS OBLIGATION IS SUCH that if said work is found to contain defects in material or workmanship within a period of one (1) year from the date of completion and acceptance and the Principal, his/her/its heirs, executors, administrators, successors or assigns, shall fail to correct such defects, then said Surety will pay the cost for correction of any defects in material or workmanship which appear within said one (1) year in or to an amount not exceeding the amount hereinabove set forth, and also will pay in case suit is brought upon this bond a reasonable attorney's fee in such suit, which fee shall be fixed by the Court.

If any action shall be brought by the Town upon the bond, a reasonable attorney's fee, to be fixed by the Court, shall be and become a part of the Town's Judgment in any action.

And the said Surety, for value received, hereby stipulates and agrees that no change, extension of time, alteration or addition to the terms of the contract or to the work to be performed thereunder or the specifications accompanying the same shall in any wise affect its obligations on this bond, and it does hereby waive notice of any such change, extension of time, alteration or addition to the terms of this contract or to the work or to the specifications.

IN WITNESS WHEREOF, the above bounden parties have executed this instrument under their seals this _____ day of _____, 20___, the name and corporate seal of each corporate party being hereto affixed and these presents duly signed by its undersigned representative, pursuant to authority of its governing body.

NOTE: To be signed by Principal and Surety and acknowledgment and notarial seal attached.

(SEAL)

PRINCIPAL

By:_____

Title: _____

SURETY

By:_____

Title: _____

The above bond is accepted and approved this ___ day of_____, 20___.

SAMPLE

TOWN OF SAN ANSELMO

GUARANTEE

MEMORIAL PARK ATHLETIC FIELD RENOVATION PROJECT

Project Description:

The work to be performed under this Contract consists of, but is not limited to: clearing and grubbing, irrigation and landscape planting, drainage, water pollution control, and ancillary work in Memorial Park in San Anselmo, CA.

Date of Acceptance:

We hereby guarantee that the work we have installed for the Town has been done in accordance with the approved Plans and Specifications as well as all applicable State and local regulations and that the work as installed will fulfill the requirements of the guarantee.

We agree to repair or replace any or all of our work, together with any other adjacent damages resulting from our work, that may prove to be defective in its workmanship or material within a period of ONE YEAR from the date of acceptance of the above-named work by Town without any expense whatsoever to the Town, ordinary wear and tear and unusual abuse or neglect excepted.

Within fifteen (15) days after being notified in writing by Town of any defects in the work, we agree to commence and prosecute with due diligence all work necessary to fulfill the terms of this guarantee, and to complete the work within a reasonable period of time (not to exceed thirty (30) days after commencement of the repair work); and in the event of our failure to so comply, we collectively and separately, do hereby authorize said Town to proceed to have such work done at our expense and we will honor and pay the cost and charges therefor upon demand.

DATED:_____

CONTRACTOR

BY: _____

Title: _____

(To be signed and notarized before acceptance of project).

SAMPLE

TOWN OF
SAN ANSELMO
EST. 1907

MEMORIAL PARK ATHLETIC FIELD RENOVATION PROJECT

SPECIAL PROVISIONS

For use in Connection with the Project Bid Book, Project Plans, the Standard Specifications and Standard Plans of the California Department of Transportation dated **2018**, the Revised Standard Specifications of the California Department of Transportation dated **May 31, 2018,** the Caltrans Labor Surcharge and Equipment Rental Rates in effect on the date the work is accomplished, and the **2008** Marin County Uniform Construction Standards.

Bid Opening:
August 4, 2022 at 10:00 a.m.
Town of San Anselmo
Council Chambers
525 San Anselmo Avenue
San Anselmo, CA 94960

June 28, 2022

MEMORIAL PARK ATHLETIC FIELD RENOVATION PROJECT

These Special Provisions were prepared under the Direction of the following licensed persons:

Sean Condry, PE
Town Public Works Director
Town of San Anselmo

Scott Schneider, PE
Assistant Public Works Director
Town of San Anselmo

IMPORTANT SPECIAL NOTICE

****

- THE "PROPOSAL AND CONTRACT" BOOK HAS BEEN RETITLED AND IS NOW THE "BID" BOOK.
- THE "NOTICE TO CONTRACTORS" HAS BEEN RETITLED AND IS NOW THE "NOTICE TO BIDDERS."
- THE "GENERAL PROVISIONS" HAVE BEEN RETITLED AND ARE NOW INCLUDED IN THE SPECIAL PROVISIONS UNDER DIVISION I.
- THE SPECIAL PROVISIONS HAVE BEEN CHANGED TO REFERENCE THE 2018 STATE STANDARD SPECIFICATIONS.
- A REFERENCE TO A STANDARD SPECIFICATION HEADING IS ONLY MADE WHEN MODIFYING THE SECTION AND IS NOT A COMPREHENSIVE LISTING OF THE SECTIONS WHICH APPLY TO THE PROJECT. UNLESS DELETED, ALL SECTIONS APPLY TO THE PROJECT. SECTIONS WHICH ARE NOT DELETED, ADDED, OR MODIFIED BY THE SPECIAL PROVISIONS REMAIN AS WRITTEN AND AS MODIFIED BY THE REVISED STANDARD SPECIFICATIONS PUBLISHED ON MAY 31, 2018. ANY MODIFICATION TO A SECTION DOES NOT CHANGE THE REST OF THE SECTION. ANY PARAGRAPH ADDED OR DELETED BY A REVISION CLAUSE DOES NOT CHANGE THE PARAGRAPH NUMBERING OF THE STANDARD SPECIFICATIONS FOR ANY OTHER REFERENCE TO A PARAGRAPH OF THE STANDARD SPECIFICATIONS.

TABLE OF CONTENTS

NOTICE TO BIDDERS 1
SPECIAL PROVISIONS 4
DIVISION I GENERAL PROVISIONS.....5
DIVISION II GENERAL CONSTRUCTION 25

SECTION 01500 Temporary Facilities
SECTION 02225 Trenching
SECTION 02230 Site Clearing
SECTION 02300 Earthwork
SECTION 02513 Asphalt Concrete Paving
SECTION 02620 Sub Drains
SECTION 02810 Irrigation Systems
SECTION 02910 Soil Preparation of Planting Areas
SECTION 02920 Lawns and Grasses
SECTION 06063 Exterior Rough Carpentry

DIVISION 12 TEMPORARY TRAFFIC CONTROL
DIVISION 13 WATER POLLUTION CONTROL
DIVISION 15 EXISTING FACILITIES

Click here to enter text.

TOWN OF SAN ANSELMO
NOTICE TO BIDDERS

INVITING SEALED PROPOSALS

MEMORIAL PARK ATHLETIC FIELD RENOVATION PROJECT

NOTICE IS HEREBY GIVEN that sealed proposals will be received by the Town of San Anselmo, Department of Public Works, 525 San Anselmo Avenue, San Anselmo, California 94960, 10:00 a.m., August 4, 2022, at which time they will be publicly opened and read**.**

SCOPE: The bid shall cover all costs for all work involved and furnishing of the resources and activities which are required for the MEMORIAL PARK ATHLETIC FIELD RENOVATION PROJECT. The work to be performed under this contract consists of, but is not limited to: clearing and grubbing, irrigation and landscape planting, drainage, water pollution control, and ancillary work in Memorial Park in San Anselmo, CA.

ESTIMATED COST: The estimated cost for this project is $785,000.

INSPECTION OF DOCUMENTS: Plans, Notice to Bidders, Bid Book, and Special Provisions may be viewed at the Department of Public Works, 525 San Anselmo Avenue, San Anselmo CA 94960, and can be obtained from BPXpress Reprographics located at 4903 Central Avenue, Richmond, CA 94804 for a nonrefundable cost of $50 per set. Shipping and handling are extra, depending on the delivery method. Electronic copes of the documents are also available for a non-refundable cost of $50 per set.

For additional information or technical questions concerning this project, please call Scott Schneider, Assistant Public Works Director, at (415) 258-4653. Inquiries or questions based on patent ambiguity of the plans, specifications, contract documents or estimate must be communicated in writing prior to 10:00 A.M. on July 22, 2022, and the Town will provide a written response.

No pre-bid meeting is scheduled for this project.

ELIGIBILITY: Bidders must hold a valid license to perform the required work as provided by the Business and Professions Code, and may be required to submit evidence to the Town as to their ability, financial responsibility, and experience, in order to be eligible for consideration of their proposal. The Contractor shall possess a valid Class A License for the State of California at the time contract is awarded. The Contractor and all listed Subcontractors shall possess valid Department of Industrial Relations Registration Numbers.

BID: Bids must be submitted as a completed Bid Book with bidder's security and signed copies of all issued addenda.

BIDDER'S SECURITY: Bids shall be accompanied by one of the following forms of bidder's security equal to at least 10 percent of the bid and made out to Town of San Anselmo: Certified Check, Cashier's Check, Bidder's Bond. If using a bidder's bond, use the form in the Bid Book or a form containing the same information.

Failure of the successful bidder to execute and return the contract, or to file acceptable bond, as required, within the time allotted shall be cause for the annulment of the award and forfeiture of the bidder's security. The bidder's security of unsuccessful bidders may be retained by the Town of San Anselmo for a period of 30 days after award. If a bidder to whom the contract is awarded fails, or refuses, to execute the contract within 10 days of notice of award, as herein provided, the Director of Public Works may award to the next lowest bidder and apply the bidder's security of the bidder failing, or refusing, to execute contract as herein required. The bidder's security of bidders to whom no award was made will be returned upon request.

BID OPENING: Bids will be opened and read at the Town of San Anselmo Town Hall on the day specified above. Bids are required for the entire work described in the Bid Book and Contract Documents. Bidders should take care to complete all details in a legible manner in the bid documents. Failure to do so may be cause for rejection of the bid. Only the total amount of the bid will be read at the bid opening, unless requested, in writing, at the time of the submission of bids. Bidders can inspect bids at the Department of Public Works, to which they will be removed for the purpose of checking after reading of totals. Bids are required for the entire work described herein, and neither partial nor contingent bids will be considered.

AWARD: Award of contract, if awarded, will be to the lowest responsible bidder whose proposal complies with prescribed requirements, and will be within thirty (30) days after receipt of proposals. The Town of San Anselmo reserves the right to reject any or all bids. **The work site will become available to the Contractor on Tuesday September 6, 2022, which will be the first official work day. The time period between Award of Contract and September 6, 2022 will not be counted towards the working days for the project.**

BID PROTEST: All bid protests shall be in writing and delivered to the Town of San Anselmo Public Works Director within five (5) working days following the determination of the lowest responsible bidder. If necessary, a hearing may be held to determine the position of all involved parties.

ADDENDA: When issued, addenda will be on file at the Town of San Anselmo, Department of Public Works at least 72 hours before bids are opened. In addition, all addenda will be faxed or e-mailed to persons on the Town's Bid Holder's List; however, it shall be the bidder's responsibility to ensure that the contact information is correct and to make inquiry as to the addenda issued. All such addenda shall become part of the contract documents and all bidders shall be bound by such addenda whether or not received by the bidders. Bidders who acquire project bid documents from sources other than directly from the Town of San Anselmo are not on the Town's bid holder's list, and are solely responsible for inquiring about and acquiring all addenda. If the Town issues any addendum that results in a material change to the invitation for bids, the date and time for submitting bids will be extended by at least 72 hours and the revised bid opening date will be noted on the addendum.

BONDS: The Contractor whose bid is accepted shall furnish the following bonds to the Town (at no expense to Town), executed by an admitted surety insurer in a form acceptable to the Town: Performance Bond, Payment Bond, and Defective Material and Workmanship Bond.

The Performance Bond shall be in an amount equal to one hundred percent (100%) of the total amount bid by the Contractor in his proposal. The Payment Bond shall be in an amount equal to one hundred percent (100%) of the total amount bid by the Contractor in his proposal. The Defective Material and Workmanship Bond shall be in an amount equal to not less than ten percent (10%) of the contract cost of work determined in the final pay estimated prepared by the Engineer.

The surety for such security shall be currently admitted to transact surety insurance by the California Department of Insurance and shall carry a Best's rating of no less than A.

PREVAILING WAGES: In compliance with the provisions of Section 1777.6 of the Labor Code of the State of California, as amended, the Contractor and each of his Subcontractors shall keep an accurate payroll record, showing the name, address, social security number, work classifications, straight time, and overtime hours worked each day and week, and the actual per diem wages paid to each journeyman, apprentice, or worker employed by them in connection with the Project. Said records shall be available for inspection at all reasonable hours, and copies shall be made available to the employer or his authorized representative, the State Division of Labor Standards Enforcement, the State Division of Apprenticeship Standards, and the Town.

Attention is directed to Section 7-1.02K (2), “Wages," of the Standard Specifications and The General Prevailing Wage Rates determined by the Director of Industrial Relations for Town of San Anselmo where the work is to be completed. Copies of said wage rates are available at the Labor Compliance Office and at the Public Works Department, 525 San Anselmo Avenue, San Anselmo. Changes, if any, to the general prevailing wage rates will be available at the same location.

No contractor or subcontractor may be listed on a bid proposal for a public works project unless registered with the Department of Industrial Relations (DIR) pursuant to Labor Code section 1725.5 [with limited exceptions from this requirement for bid purposes only under Labor Code section 1771.1(a)].

ACKNOWLEDGEMENT OF CONDITIONS: By submitting a bid in response to this notice inviting bids, the bidder shall be conclusively deemed to have visited the site, read, understood and agreed with all of the information and materials contained in the bid documents, including but not limited to the Contract, the Bid Book, the Special Provisions, the Project Plans, the 2018 Caltrans Standard Plans and Specifications, the Revised Standard Specifications published May 31, 2018, the required indemnification obligation, and the required nature and amount of insurance and endorsements and certificates evidencing such insurance.

If a bidder has any problems understanding or accepting any of the terms and/or conditions specified in the bid documents, said bidder should contact the Assistant Public Works Director at sschneider@townofsananselmo.org prior to submitting the bid. The deadline for submitting questions about this project is 10:00 A.M. on July 22, 2022.

Date: 06/29/22

By:_____
Sean Condry
Director of Public Works/Town Engineer

SPECIAL PROVISIONS

- GENERAL -

The work embraced herein shall be done in accordance with the Contract Documents: the bid book, these special provisions, the project plans, the California Department of Transportation Standard Specifications dated 2018 and Standard Plans dated 2018, the Labor Surcharge and Equipment Rental Rates in effect on the date the work is accomplished, and the 2008 Marin Uniform Construction Standards.

Refer to Section 5-1.02 for the order of precedence of Contract Documents in case of any conflict.

Special provisions and Revised Standard Specifications, under separate cover, are under headings that correspond with the main-section headings of the Standard Specifications. A main-section heading is a heading shown in the table of contents of the Standard Specifications.

Each special provision begins with a revision clause that describes or introduces a revision to the Standard Specifications. A reference to a Standard Specification heading is only made when modifying the section and is not a comprehensive listing of the sections which apply to the project. All sections apply to the project. Sections which are not deleted, added, or modified by the special provisions remain as written and as modified by the Revised Standard Specifications published on or prior to May 31, 2018. Any modification to a section does not change the rest of the section. Any paragraph added or deleted by a revision clause does not change the paragraph numbering of the Standard Specifications for any other reference to a paragraph of the Standard Specifications.

Any reference to a State Agency or officer shall be interpreted as if the corresponding Town Office or officer acting under this contract were so specified.

Any reference to contact information for the State shall be interpreted as if the corresponding Town contact information were so specified. Should there be any question as to what the corresponding information would be, contact the Town Director of Public Works for determination.

Where the version of a referenced document is not specified, use the current version in effect on the date of the Notice to Bidders.

Unless an object or activity is specified to be less than the total, the quantity or amount is all of the object or activity.

All items in a list apply unless the items are specified as choices.

The following Special Provisions are amendments to Caltrans Standard Specifications Dated 2018, unless otherwise stated:

^^^

Contract Documents: The Contract Documents consist of the accepted Bid; all issued Addenda (if any); all Bidding Documents including the Notice to Bidders, Instructions to Bidders, Bid Book, Schedule of Bid Items, List of Subcontractors, Debarred Contractor List, Public Contract Code Statements, Questionnaire, and Non-collusion Affidavit, Experience and Financial Qualifications, Debarment and Suspension Certification, Field Review Certification, Contractor's License Requirement Declaration, Bidder's Security, Faithful Performance Bond, Labor and Material Bond, Escrow Agreement for Security Deposit in Lieu of Retention if submitted, Defective Materials and Workmanship Bond, Worker's compensation Certification, executed Contract Agreement, insurance, project Plans and Special Provisions, all documents included by reference in any contract document, 2018 State of California Standard Specifications, 2018 State of California Standard Plans, 2008 Marin Uniform Construction Standards, the Caltrans Labor Surcharge and Equipment Rental Rates in effect on the date the work is accomplished, warranty, fully executed contract change orders, and any Engineer endorsed working drawings, sketches, or instructions clarifying or enlarging upon the work specified herein issued by the Town.

Contract Time: Number of original working days as adjusted by any time adjustment.

Disadvantaged Business Enterprise: Disadvantaged Business Enterprise as defined in 49 CFR 26.5.

Defective Work: Work that is unworkmanlike, unsatisfactory, faulty, omitted, incomplete, deficient, or does not conform to the requirements of the Contract Documents, directives of the Engineer, or requirements of any inspection, reference standard, test, or approval specified in the Contract Documents.

Director of Public Works/ Engineer: "Director of Public Works" and the term, "Engineer" shall mean the Director of the Department of Public Works of San Anselmo, acting on behalf of the Town or ex officio as engineer of the awarding entities as described under the definition of "Town ", or his authorized agent acting within the scope of his authority, who shall act as the representative of the Town during the term of the contract.

Laboratory: The laboratory or laboratories authorized by the Town of San Anselmo to test materials and work involved in the contract.

Legal Holidays: Those days designated as holidays by the Town of San Anselmo.

Office Engineer: Public Works Director

Punch list: An inventory prepared by the Town of contract items of work, or portions thereof, that are incomplete, deficient, or not in conformance with the contract plans, specifications, contract change orders, or other contract documents.

Requests for Information: A request from the contractor or one of their subcontractors, to the Town, seeking an interpretation or a clarification of some requirement of the contract documents submitted to the Town in the form required by the Contract. The Contractor shall clearly and concisely set forth, in writing, the issue for which they seek clarification or interpretation and why a response is needed from the Town. The contractor shall, in the written request, set forth their interpretation or understanding of the contract's requirements along with reasons why they have reached such an understanding. Responses from the Town will not change any requirements of the contract documents unless so noted in the Request for Information Response by the Town.

Schedule Submittals: Contract schedules, contract schedule updates, contract schedule revisions, time impact analyses, etc. required by the Contract to be provided to the Town for review and acceptance.

Shop Drawings: Any technical submittals, shop drawings or samples, including supporting catalogue cuts, manufacturer's literature, sketches or drawings, calculations, and other pertinent data, required by any technical specification included in these contract documents. The contractor shall transmit to the Town submittals/shop drawings in sufficient detail to enable the Town to review the information and determine that the Contractor clearly understands the requirements of the contract documents.

Standard Plans: The Standard Plans of the State of California Department of Transportation dated 2018.

Standard Specifications (or State Standard Specifications): State of California Department of Transportation Standard Specifications, dated 2018, as amended. Any reference therein to the State of California or a State agency, office, or officer shall be interpreted to refer to the Town or its corresponding agency, office, or officer acting under this contract.
State Highway Engineer: The Town Engineer of the Town of San Anselmo, State of California.
Substitution (or Equal) Submittals: A request from the Contractor to substitute a material, article, device, product, fixture, form, type of construction, or process called for in the contract documents with another item which shall be substantially equal in all respects to that so indicated or supplied.
Town : Town shall mean the Town of San Anselmo, a political subdivision of the State of California, or, if applicable, the public entity awarding this contract by action of the Town Council sitting as the governing body of such public entity, except as provided in the indemnity and insurance requirements in Section 7.
Town Council -Town Council shall mean the governing body of San Anselmo, California.
Transportation Building, Sacramento – Town Hall, Town of San Anselmo, State of California.
Uniform Construction Standards: Uniform Construction Standards shall mean the Uniform Construction Standards approved and adopted by the Cities of Marin and County of Marin in May, 2008.

Replace the following terms in section **1-1.07B** with:

Contract Acceptance (or completion): acceptance of the completed contract by Town Council

Department (or Department of Transportation): The Town Council.
State: The Town of San Anselmo. Any reference to a State Agency or officer shall be interpreted as if the corresponding Town Office or officer acting under this contract were so specified.
Submittals: Any technical submittals, shop drawings or samples, including supporting catalogue cuts, manufacturer's literature, sketches or drawings, calculations, and other pertinent data, required by any technical specification included in these contract documents. The contractor shall transmit to the City submittals/shop drawings in sufficient detail to enable the City to review the information and determine that the contractor clearly understands the requirements of the contract documents.

Replace "excusable delay" and its definition in section 1-1.07B with:

delay: Event that extends the completion of an activity.

1. **excusable delay:** Delay caused by the Department and not reasonably foreseeable when the work began such as:
   1.1. Change in the work
   1.2. Department action that is not part of the Contract
   1.3. Presence of an underground utility main not described in the Contract or in a location substantially different from that specified
   1.4. Described facility rearrangement not rearranged as described, by the utility owner by the date specified, unless the rearrangement is solely for the Contractor's convenience
   1.5. Department's failure to obtain timely access to the right-of-way
   1.6. Department's failure to review a submittal or provide notification in the time specified
2. **critical delay:** Excusable delay that extends the scheduled completion date
3. **concurrent delay:** Occurrence of at least 2 of the following events in the same period of time, either partially or entirely:
   3.1. Critical delay
   3.2. Delay to a controlling activity caused by you
   3.3. Non–working day

^^^

Replace section **2-1.06A General** with:

Plans, Notice to Bidders, Bid Book, and Special Provisions may be viewed or purchased at the Town of San Anselmo Department of Public Works, 525 San Anselmo Avenue, San Anselmo, CA 94960.

2018 Standard Specifications and *Standard Plans* may be viewed at the Caltrans 'Bidders' Exchange Web site and may be purchased at the Caltrans Publications Unit of the Division of Procurement and Contracts: (916) 263-0822.

May 31, 2018 Revised Standard Specifications and the 2008 Marin County Standards can be obtained via email from the Town at no charge. Email request to mdelacruz@townofsananselmo.org

Replace section **2-1.06B Supplemental Project Information** with:

Supplemental project information, if available, can be obtained from the Town of San Anselmo Department of Public Works, 525 San Anselmo Avenue, San Anselmo, CA 94960

Add to section **2-1.07: RESERVED**

2-1.07 JOB SITE AND DOCUMENT EXAMINATION
Examine the job site and bid documents. Notify the Town of apparent errors and patent ambiguities in the plans, specifications, and Bid Item List. Failure to do so may result in rejection of a bid or rescission of an award.
Bid submission is your acknowledgment that you have examined the job site and bid documents and are satisfied with:

1. General and local conditions to be encountered
2. Character, quality, and scope of work to be performed
3. Quantities of materials to be furnished
4. Character, quality, and quantity of surface and subsurface materials or obstacles
5. Requirements of the contract

Delete section **2-1.15 DISABLED VETERAN BUSINESS ENTERPRISES**

Delete section **2-1.18 SMALL BUSINESS AND NON–SMALL BUSINESS SUBCONTRACTOR PREFERENCES**

Delete the 1st and 2nd paragraphs of section **2-1.24 TIED BID RESOLUTION**

Delete section **2-1.27, "CALIFORNIA COMPANIES"**

Replace section **2-1.33 BID DOCUMENT COMPLETION AND SUBMITTAL** with:

BID DOCUMENT COMPLETION AND SUBMITTAL

The Engineer may, at a time prior to the bid opening, issue addenda to the Notice to Bidder, Bid Book, Special Provisions, Plans and Specifications to amend, clarify, or correct matter contained therein. Such addenda shall constitute a part of said Plans and Specifications and shall be equally binding with them. Addenda will be forwarded to all prospective bidders on the Town's bid holders list, so long as their contact information was correctly provided to the Town.

All addenda issued for this project must be signed and submitted with your Bid Book

Complete the forms in the Bid Book.

Submit the completed Bid Book, signed addenda (if issued), and bidder's security with your bid.

If using a bidder's bond, you may use the form in the Bid Book. If you do not use the form in the Bid Book, note 'see attached equivalent' on the form in the Bid Book, and submit a form containing the same information. If submitting cashier's check, or certified check, note "see attached alternative method of security" on the form in the Bid Book and attach the security.

Submit your bid:

1. Under sealed cover
2. Marked as a bid
3. Identifying the contract name
4. Identifying the date and time of the bid opening

Failure to submit the forms and information as specified results in a nonresponsive bid.
If an agent other than the authorized corporation officer or a partnership member signs the bid, file a Power of Attorney with the Department either before opening bids or with the bid. Otherwise, the bid may be nonresponsive.

Add to section **2-1.36 RESERVED:**

2-1.36 GUARANTY AND WARRANTY
Furnish a Defective Material and Workmanship Bond (sample in Appendix A of Bid Book), of a surety company acceptable to the Engineer, and payable to the Town of San Anselmo, in a sum not less than ten percent of the total Final Estimate amount. This warranty bond shall be delivered to the Engineer before requesting Contract Acceptance by the Town.

Warranty the quality of the Work, in accordance with the terms of the Contract Documents, for the "Warranty Period." The Warranty Period shall be a one year period, unless otherwise required in the Contract Documents, commencing on the date of acceptance of the contract by the Town Council.

Complete and submit the Town of San Anselmo Guarantee (sample in Appendix A of Bid Book). This guarantee shall be delivered to the Engineer before requesting Contract Acceptance by the Town.

The Contractor hereby agrees to repair or replace any and all work, together with any other adjacent work which may be displaced in so doing, that may prove to be not in accordance with the requirements of the Contract or that may be defective in its workmanship or material within the guarantee period specified, without any expense whatsoever to the Town.

The Contractor further agrees, that within ten (10) calendar days after being notified in writing by the Town of any work not in accordance with the requirements of the Contract or any defects in the work, he will commence and prosecute with due diligence all work necessary to fulfill the terms of this guarantee, and to complete the work within a reasonable period of time (not to exceed thirty (30) days after commencement of the repair work). In the event the Contractor fails to comply, it does hereby authorize the Town to proceed to have such work done at the Contractor's expense and he will honor and pay the costs and charges upon demand. The Town shall be entitled to all costs and expenses, including reasonable attorney's fees, necessarily incurred upon the Contractor's refusal to honor and pay the above costs and charges.

^^

3 CONTRACT AWARD AND EXECUTION

Replace section 3-1.05 **CONTRACT BONDS (PUB CONT CODE §§ 10221 AND 10222)** with:

The successful bidder must furnish 2 bonds:

1. Payment bond to secure the claim payment of laborers, workers, mechanics, or materialmen providing goods, labor, or services under the Contract. This bond must be equal to at least 100 percent of the total bid.
2. Performance bond to guarantee the faithful performance of the Contract. This bond must be equal to at least 100 percent of the total bid.

Whenever any surety on any such bonds become insufficient, or if there is a reasonable cause to believe that such surety or sureties have become insufficient, a demand in writing may be made of you to furnish good and sufficient bond or bonds required by the terms of the contract. Thereafter, no payment will be made upon such contract to you or any assignee of yours until such further bond or bonds or additional surety has been furnished.
The surety for such security shall be currently admitted to transact surety insurance by the California Department of Insurance and shall carry a Best's rating of no less than A.

Notification of Surety Companies - The surety companies shall familiarize themselves with all of the conditions and provisions of the contract, and shall waive the right of special notification of change or modification of the contract, or of any other act or acts by the Town or its authorized agents, under the terms of the contract. Failure to notify the surety companies of changes shall in no way relieve them of their obligations under the contract.

The Town furnishes the successful bidder with bond forms.

Delete section **3-1.08, SMALL BUSINESS PARTICIPATION REPORT**

Delete section **3-1.11, PAYEE DATA RECORD**

Add to section **3-1.17 Bid Protest Procedures**:

Any protest of the proposed award of Bid to the bidder deemed the lowest responsible bidder must be submitted in writing to the Town no later than 5:00 PM of the fifth (5th) business day following the date of the Bid opening, and

- The initial protest must contain a complete statement of the basis for protest.
- The protest must state the facts and refer to the specific portion of the document or the specific statute that form the basis for the protest. The protest must include the name, address, and telephone number of the person representing the protesting party.
- The party filing the protest must concurrently transmit a copy of the initial protest to the bidder deemed the lowest responsible bidder.
- The party filing the protest must have actually submitted a Bid on the Project. A subcontractor of a party filing a Bid on this Project may not submit a Bid Protest. A party may not rely on the Bid Protest submitted by another Bidder, but must timely pursue its own protest.

- The procedure and time limits set forth in this Section are mandatory and are the Bidder's sole and exclusive remedy in the event of a Bid Protest. The Bidder's failure to fully comply with these procedures shall constitute a waiver of any right to further pursue the Bid Protest, including filing of a challenge of the award pursuant to the California Public Contracts Code, filing of a claim pursuant to the California Government Code, or filing of any other legal proceedings.
- The Town shall review all timely protests prior to formal award of the Bid. The Town shall not be required to hold an administrative hearing to consider a timely protest, but may do so at the option of the Town Manager. At the time of the Town Council's consideration of the award of the Bid, the Town Council shall consider the merits of any timely protests. The Town Council may either accept the protest and award the bid to the next lowest responsible bidder or reject the protest and award to the lowest responsible bidder.
- These bid protest procedures shall not limit the Town's ability to reject all bids.

Bid Protests based upon a staff recommendation to the Town Council that the apparent low bidder is not a responsible bidder shall be subject to the following procedure:

- The Town Engineer or his/her designee, shall provide notice to the apparent low bidder of its determination and recommendation to the Town Council that the bidder is not responsible stating the specific reasons therefore.
- The bidder shall no later than 5:00 PM of the second (2nd) business day following receipt of the notice, file any protest in writing with the Town Engineer or his/her designee. The protest must clearly specify in writing the grounds and evidence on which the protest is based. If the protestor later raises new grounds or evidence not previously set forth in the written submissions that reasonably could have been raised, the Town will not consider such new evidence in the determination of the protest.
- The protest will be processed in the same manner as other protests are processed as described above.

Replace section **3-1.18 CONTRACT EXECUTION** with:

The successful bidder must sign the *Contract* form.
Deliver two copies of the following to the Office Engineer:

1. Signed Contract form
2. Contract bonds
3. Documents identified in section 3-1.07
4. Small Business (SB) Participation Report form
5. For a federal-aid contract, Caltrans Bidder - DBE Information form
6. For a federal-aid contract, form FHWA-1273
7. Insurance documents

For an informal-bid contract, the Office Engineer must receive these documents before the 5th business day after the bidder receives the contract.
For all other contracts, the Office Engineer must receive these documents before the 10th business day after the date that the Notice of Award is mailed to the bidder.
The bidder's security may be forfeited for failure to execute the contract within the time specified (Pub Cont Code §§ 10181, 10182, and 10183).

A sample of the *Contract* form is included in the Sample Contract Forms section of the Bid Book.

^^

4 SCOPE OF WORK

Add to section **4-1.06 DIFFERING SITE CONDITIONS (23 CFR 635.109)**:

During the progress of the work, if subsurface or latent physical conditions are encountered at the site differing materially from those indicated in the contract or if unknown physical conditions of an unusual nature, differing materially from those ordinarily encountered and generally recognized as inherent in the work provided for in the contract, are encountered at the site, the party discovering such conditions shall no later than five (5) working days from discovery of the differing site condition notify the other party in writing of the specific differing conditions before they are disturbed and before the affected work is performed.

Upon written notification, the Engineer will investigate the conditions, and, if the Engineer determines that the conditions materially differ and cause an increase or decrease in the cost or time required for the performance of any work under the contract, an adjustment, excluding loss of anticipated profits, will be made and the contract modified in writing accordingly. The Engineer will notify the Contractor of his/her determination whether or not an adjustment of the contract is warranted.

No contract adjustment that results in a benefit to the Contractor will be allowed unless the Contractor has provided the required written notice.

No contract adjustment will be allowed under the provisions specified in this section for any effects caused on unchanged work.

Any contract adjustment warranted due to differing site conditions will be made in accordance with the provisions in Section 4-1.05, “Changes and Extra Work,” of the Standard Specifications except as otherwise provided.

^^

5 CONTROL OF WORK

Add to section **5-1.01 GENERAL**:

If a portion of the Work is covered prior to inspection by the Town (contrary to Engineer’s request or direction, or contrary to the requirements of the Contract Documents), you shall, if required by the Engineer, uncover the Work for the Engineer’s observation, and replace the Work at your expense without adjustment of the Contract Time or the Contract Sum.
If a portion of the Work has been covered, which is not required by the Contract Documents to be observed or inspected prior to it being covered and which the Engineer has not specifically requested to observe prior to its being covered, the Engineer may request to see such Work and it shall be uncovered and replaced by you. If such Work is in accordance with the Contract Documents, the costs of uncovering and replacing the Work shall be added to the Contract Amount by Change Order; and if the uncovering and replacing of the Work results in an Excusable Delay or a Compensable Delay, an appropriate adjustment of the Contract Time shall be made by Change Order. If such Work is not in accordance with the Contract Documents, you shall pay such costs and shall not be entitled

to an adjustment of the Contract Time or the Contract Amount.

Replace section **5-1.02 CONTRACT COMPONENTS** with:

A component in one Contract part applies as if appearing in each. The parts are complementary and describe and provide for a complete work.
If a discrepancy exists:

1. The governing ranking of Contract parts in descending order is:

    1.1. Special provisions
    1.2. Project plans
    1.3. Revised standard specifications
    1.4. Standard specifications
    1.5. Revised standard plans
    1.6. Standard plans
    1.7. Marin Uniform Construction Standards
    1.8. Supplemental project information

2. Written numbers and notes on a drawing govern over graphics
3. A detail drawing governs over a general drawing
4. A detail specification governs over a general specification
5. A specification in a section governs over a specification referenced by that section

If a discrepancy is found or confusion arises, submit an RFI, reference shall be made to the Director of Public Works and his decision shall be final.

Add to section **5-1.12 ASSIGNMENT:**

The Contract Documents, and any portion thereof, shall not be assigned or transferred, nor shall any of the Contractor's duties be delegated, without the written consent of the Town. Any attempt to assign or delegate the Contract Documents without the written consent of the Town shall be void and of no force and effect. A consent by the Town to one assignment shall not be deemed to be a consent to any subsequent assignment.
Pursuant to California Government Code section 4552, the Contractor shall assign to the Town, all rights, title, and interest in and to all causes of action it may have under Section 4 of the Clayton Action (15 U.S.C. Section 15) or under the Cartwright Act (Chapter 2 [commencing with Section 16700] of Part 2 of Division 7 of the California Business and Professions Code), arising from purchases of goods, services, or materials pursuant to the public works contract or the subcontract. This assignment shall be made and become effective at the time the Town tenders final payment to the Contractor, without further acknowledgment by the parties. The Contractor further warrants that all goods, services, and materials provided to the Town in accordance with this Contract are free and clear of all liens and encumbrances.

Add to section **5-1.16 REPRESENTATIVE**:

The Contractor shall designate in writing before starting work, for approval by the Engineer prior to construction, an authorized representative who shall have the authority to represent and act for the Contractor. The authorized representative shall be the same person from the beginning to the end of the project. Said authorized representative shall have a mobile phone at the site at all time while work is in progress. The representative shall provide an emergency contact list whereby an authorized contractor representative is reachable at all times for the duration of the Contract. Whenever the

Contractor varies the period during which work is carried on each day, he shall give due notice to the Engineer so that proper inspection may be provided.

Add to section **5-1.20B(1) General**:

Procure all permits and licenses, pay all charges and fees, and give all notices necessary to the due and lawful prosecution of the work.
You and your subcontractors must possess valid Town of San Anselmo business licenses, and provide a copy to the Engineer; valid State contractor licenses with a classification appropriate for the work to be performed (Bus & Prof Code § 7000 et seq.), and valid public works contractor registration numbers with the Department of Industrial Relations.
Pay all license fees and royalties related to or necessary for the Work and assume all costs incident to the use in the performance of the Work or the incorporation in the Work of any invention, design, process, product, or device that is the subject to patent rights or copyrights held by others.

Replace paragraph 3 of section **5-1.23A General** with:

Each sheet of a submittal must include:
1. Project Name
2. Submittal Number
3. Date of Submittal

Add to section **5-1.23A General**:

Proposed Products List
Within five (5) days after contract approval, submit a complete list of materials to be incorporated into the project stating the special provision section, the vendor's name, the manufacturers name if different from the vendor's, trade name, and model number or code for each product.

Add between the 5th and 6th paragraphs of section **5-1.23B(1) General**:

For a revised submittal, allow the same number of days for review as for the original submittal.

Add to section **5-1.27A General:**

Make a record of changes during construction on one set of prints of the plans and specifications provided by the Engineer for this purpose. This set of documents shall be kept at the job site and shall be used only for marking as-built conditions. Upon completion of the project, deliver these documents to the Engineer prior to the processing of the final estimate.

Replace section **5-1.27E Change Order Bills** with:

Maintain separate records for change order work costs. Submit daily.

Add to section **5-1.36:**

5-1.36E Survey Monuments

Protect survey monuments. Upon discovery of a survey monument, immediately:
1. Stop work near the monument
2. Notify the Engineer

Do not resume work near the monument until authorized.

Add to section **5-1.43A General**:

Your failure to comply with section 5-1.43 including **5-1.43B Initial Potential Claim Record**, section **5-1.43C Supplemental Potential Claim Record**, section **5-1.43C Supplemental Potential Claim Record**, and section **5-1.43E Alternative Dispute Resolution** is:

1. Waiver of the potential claim and a waiver of the right to a corresponding claim for the disputed work in the administrative claim procedure
2. Bar to arbitration (Pub Cont Code 10240.2 and Pub Cont Code § 20104.2)

Certify all potential claim records with reference to the California False Claims Act, Government Code Sections 12650- 12655.

^^

6 CONTROL OF MATERIALS

Add to section **6-3.05E Certificates of Compliance:**

Furnish certificates of compliance where specifically required by the Standard Specifications, by these Special Provisions, and as requested by the Engineer.

^^

7 LEGAL RELATIONS AND RESPONSIBILITY TO THE PUBLIC

Replace section **7-1.02A General** with:

Comply with laws, regulations, orders, and decrees applicable to the project. Indemnify and defend the Town of San Anselmo; the public entity awarding this contract by action of the Town Council sitting as the governing body of such public entity; and the Town's employees, officers, and agents against any claim or liability arising from the violation of a law, regulation, order, or decree by you or your employees or any individual or company furnishing resources or activities for you. Immediately report to the Engineer a discrepancy or inconsistency between the Contract and a law, regulation, order, or decree.

You shall procure all permits and licenses, pay all charges and fees, and give all notices necessary and incident to the due and lawful prosecution of the Work.

If the Town incurs any fines or penalties because of your failure to comply with a law, regulation, order, or decree, the Town deducts the amount of the fine or penalty.

Immediately notify the Engineer if a regulatory agency requests access to the job site or to records. Submit a list of documents provided to the agency and issued enforcement actions.

A Town business license must be held.

Add to section **7-1.02I(2) Nondiscrimination:**

Contractor must comply with the STANDARD CALIFORNIA NONDISCRIMINATION CONSTRUCTION CONTRACT SPECIFICATIONS (GOV. CODE, SECTION 12990). Contractor must include Section 7-1.02I(2) in all subcontracts.

Add to section **7-1.02K(3) Certified Payroll Records (Labor Code § 1776)**:

Do not submit certified payroll records by email. Submit certified payroll to the attention of the Engineer at 525 San Anselmo Avenue, San Anselmo, California, 94960.

Add to section **7-1.02K(6)(a) General:**

The Engineer may notify Cal/OSHA if you fail to establish or maintain a safe and healthful workplace. The Engineer notifying or failing to notify Cal/OSHA does not relieve the Contractor of Contractor's responsibility to provide public and worker safety. The Engineers failure to identify an unsafe condition does not relieve the Contractor of Contractor's responsibility to provide public and worker safety.

Replace section **7-1.02L(2) Antitrust Claims** with**:**

The following provisions of Public Contract Code Section 7103.5 and Government Code Sections 4553 and 4554 shall be applicable to the Contractor and all subcontractors:

“In entering into a public works contract or a subcontract to supply goods, services, or materials pursuant to a public works contract, the contractor or subcontractor offers and agrees to assign to the awarding body all rights, title, and interest in and to all causes of action it may have under Section 4 of the Clayton Act (15 U.S.C. Sec. 15) or under the Cartwright Act (Chapter 2 (commencing with Section 16700) of Part 2 of Division 7 of the Business and Professions Code), arising from purchases of goods, services, or materials pursuant to the public works contract or the subcontract.
This assignment shall be made and become effective at the time the awarding body tenders final payment to the contractor, without further acknowledgment by the parties.”

“If an awarding body or public purchasing body receives, either through judgment or settlement, a monetary recovery for a cause of action assigned under this chapter, the assignor shall be entitled to receive reimbursement for actual legal costs incurred and may, upon demand, recover from the public body any portion of the recovery, including treble damages, attributable to overcharges that were paid by the assignor but were not paid by the public body as part of the bid price, less the expenses incurred in obtaining that portion of the recovery.”

“Upon demand in writing by the assignor, the assignee shall, within one year from such demand, reassign the cause of action assigned under this part if the assignor has been or may have been injured by the violation of law for which the cause of action arose and (a) the assignee has not been injured thereby, or (b) the assignee declines to file a court action for the cause of action.”

Add to section **7-1.03 PUBLIC CONVENIENCE**:

Compliance with these special provisions does not relieve you of your responsibility for public safety.

You shall conduct operations in a manner which will result in the least possible obstruction and inconvenience to the public. You shall undertake no greater length or amount of work than you can prosecute properly with due regard to the rights of the public.

Unless otherwise provided in the Special Provisions or approved in writing by the Public Works Director, all public traffic shall be permitted to pass through the work with as little inconvenience and delay as possible.

No work will be allowed on Saturday, Sunday, or legal Town holidays, unless shown on the plans, specified in these Special Provisions or approved by the Engineer.

The Contractor shall exercise diligence in preventing dust nuisance. When necessary or when directed by the Engineer, the Contractor shall apply water for laying dust. Water shall be applied by means of pressure-type distributors equipped with a spray system that will insure a uniform application.

Provide driveway access. You are responsible for investigating and accommodating the specific access needs of the residents whose driveways are impacted by your construction activity. Prior to closure of driveways, coordinate and notify the property owner or resident at least twice of such closure. Closure notices shall be given to the property owner/resident 48 hours and one hour prior to each closure. It is your responsibility to assess and accommodate all property owners' specific needs for driveway access. In no case shall a driveway remain closed for more than 8 hours unless otherwise authorized by the Engineer.

Pedestrian access facilities shall be provided through construction areas at all times. If your operations require closure of walkways, adequate pedestrian directional signs shall be provided and maintained. At the end of each working day or until the pedestrian walkways are permanently restored, temporary asphalt concrete (4'-0" minimum width) or trench steel plate ADA compliant walkways, free from tripping hazards, shall be provided and maintained. The temporary walkway surfacing shall be skid resistant and free from irregularities.

Provide all public notification, written and otherwise, to ensure public convenience and public safety as specified herein and in the Standard Plans and Specifications, and as directed by the Engineer.
Provide written notification to the public, local residents and businesses, local utility companies and any other persons or agencies affected by this project.

At all times other than normal working hours, all lanes shall be provided for uninterrupted traffic.

Add to section **7-1.04 PUBLIC SAFETY**:

The Contractor shall prepare a Traffic Control Plan for each stage of construction if staging or storage areas are to be proposed in the public right-of-way, and when requested by the Engineer for any specific construction activity. The Traffic Plan shall be prepared by a person who is certified by the Institute of Transportation (ITS), the American Traffic Safety Services Association (ATSSA), the International Municipal Signal Association (IMSA) or the State of California Department of Transportation (Caltrans) as having successfully completed training in the design and operation of work zone traffic control. Along with the Traffic Control Plan, submit the designer's Certification. Work shall not proceed without the Engineer's advance approval of the Traffic Control Plan for the work attempted.

If the failure to perform or the manner of performance of the Work results in a threat to public health or safety, the Town may, after making a reasonable, at the sole discretion of the Public Works Director, attempt to contact you, perform necessary emergency work and deduct the reasonable cost of it from the amount owed to you. The Town performing or failing to perform necessary emergency work does not relieve the Contractor of Contractor's responsibility to provide public and

worker safety. The Engineer's failure to identify an unsafe condition does not relieve the Contractor of Contractor's responsibility to provide public and worker safety.

Add to section **7-1.05A General:**

For the purpose of Section 7-1.05 INDEMNIFICATION, "TOWN" shall mean the Town of San Anselmo, and the public entity awarding this contract by action of the Town Council sitting as the governing body of such public entity.

Contractor shall effectively protect and guard the Town, its officers, agents, and employees, from any liability as a consequence of any willful act, negligent act or non-negligent act or omission by the Contractor, any of the Contractor's employees or agents, or any subcontractor or supplier, and shall be responsible for any and all damage, injury, or death to persons, or damage to property. Contractor shall indemnify, defend and hold Town harmless from any and all claims, suits, actions, costs, and liability ensuing in connection with the performance of the contract, or failure to protect the safety of workers or the general public, regardless of the existence of or degree of fault or negligence on the part of the Town or the Contractor, subcontractor, or any employee of any of these, other than the active negligence of the Town, its officers, or employees.

In those instances where the Town has obtained "Rights of Entry" from private property owners upon whose property it will be necessary for the Contractor to enter to perform the work to be done under the contract, Contractor shall indemnify such property owners in the same manner as the Town is indemnified.

Add to section **7-1.06A General:**

For the purpose of Section 7-1.06 INSURANCE, "TOWN" shall mean the Town of San Anselmo, and the public entity awarding this contract by action of the Town Council sitting as the governing body of such public entity.

Contractor shall procure and maintain as a minimum for the duration of the contract, the following described insurance against claims for injuries to persons or damages to property which may arise from or in connection with the performance of the work hereunder by the Contractor, his agents, representatives, employees or subcontractors.

a. Minimum Scope of Insurance

Coverage shall be at least as broad as:

i. Insurance Services Office Commercial General Liability coverage ("occurrence" form CG 0001 or equivalent or "claims made" form CG 00 02 or equivalent) NOTE: "claims made" coverage requires special approval and "modified occurrence" coverage is unacceptable.

ii. Insurance Services Office form number CA 0001 (Ed. 01/87 or equivalent) covering Automobile Liability, Code 1 "any auto" with endorsement CA 0029 (auto contractual).

iii. Worker's Compensation insurance as required by the State of California and Employers' Liability Insurance.

b. Minimum Limits of Insurance

Contractor shall maintain limits of no less than:

i. General Liability: $3 million per occurrence for bodily injury, personal injury and property damage. If Commercial General Liability insurance or other form with a general aggregate limit is used, either the general aggregate limit shall apply separately to this project or the general aggregate limit shall be twice the required occurrence limit.

ii. Automobile Liability: $2 million per accident for bodily injury and property damage.

iii. Employers' Liability: Provide Employer's Liability Insurance in amounts not less than:

1. $1,000,000 for each accident for bodily injury by accident
2. $1,000,000 policy limit for bodily injury by disease
3. $1,000,000 for each employee for bodily injury by disease

c. Deductibles and Self-Insured Retentions

Any deductibles or self-insured retentions must be declared to and approved by the Town of San Anselmo. At the option of the Town of San Anselmo, either the insurer shall reduce or eliminate such deductibles or self-insured retentions as respects the Town of San Anselmo, its officials, employees and volunteers, or the Contractor shall provide a financial guarantee satisfactory to the Town of San Anselmo guaranteeing payment of losses and related investigations, claim administration and defense expenses.

d. Other Insurance Provisions

The general liability policy is to contain, or be endorsed to contain, the following provisions:

i. The Town of San Anselmo, its officials, employees and volunteers are to be covered as insured with respect to liability arising out of work or operations performed by or on behalf of the Contractor including materials, parts or equipment furnished in connection with such work or operations.

ii. General liability coverage can be provided in the form of an endorsement to the Contractor's insurance (using either the Town's prepared form or using ISO form CG 20 10 11 85 or equivalent).

iii. For any claims related to this project, the Contractor's insurance coverage shall be the primary insurance with respect to the Town of San Anselmo, its officials, employees, or volunteers. Any insurance or self-insurance maintained by the Town of San Anselmo shall be excess of the Contractor's insurance and shall not contribute with it.

iv. The workers' compensation policy shall contain a waiver of subrogation in favor of the Town.

v. Each insurance policy required by this clause shall be endorsed to state that coverage shall not be canceled by either party, except after thirty days prior written notice (10 days for non-payment of premium) by certified mail with return receipt requested given to the Town of San Anselmo.

vi. Any failure to comply with reporting provisions of the policies shall not affect coverage provided to the Town, its elected and appointed officers, employees, agents or volunteers

e. Rights of Entry

If applicable, all private property owners granting "Rights of Entry" for construction of the work shall be covered as insured under the same coverage as provided the Town as respects their ownership of the property and the work to be done thereon.

f. Acceptability of Insurers

Insurance is to be placed with insurers with a current A.M. Best's Financial Strength rating of no less than A:A-, and a Financial Size Category of no less that VII Carriers not licensed in the State of California should have a current A.M. Best's rating of no less than A:X.

g. Verification of Coverage

Contractor shall furnish the Town of San Anselmo with original certificates and amendatory endorsements effecting coverage required by this clause. The endorsements should be on forms provided by the Town of San Anselmo or on other than the Town of San Anselmo's forms, provided those endorsements or policies conform to the requirements. All certificates and endorsements are to be received and approved by the Town of San Anselmo before work commences. The Town of San Anselmo reserves the right to require complete, certified copies of all required insurance policies, including endorsements affecting the coverage required by these specifications at any time.

h. Subcontractors

Contractor shall require all its subcontractors to name Contractor, and the Town of San Anselmo under its policies as additional insured and Contractor shall require all its subcontractors to furnish separate certificates and endorsements. All coverage for subcontractors shall be subject to all of the requirements stated herein. By signing a contract the successful bidder acknowledges that he is aware of the provisions of Labor Code §3700 which require every employer to be insured against liability for workers' compensation or to undertake self-insurance in accordance with that Code, and that he will comply with such provisions before commencing of the work of this contract. On signing the contract, Contractor shall give the Town (1) a certificate of consent to self-insure issued by the Director of Industrial Relations, or (2) a certificate of Workers' Compensation insurance issued by an admitted insurer, or (3) an exact copy or duplicate thereof certified by the Director or the insurer.

^^

8 PROSECUTION AND PROGRESS

Replace section **8-1.03 PRECONSTRUCTION CONFERENCE** with:

Subsequent to the issuance of the Notice of Award, but prior to the commencement of work, a preconstruction conference will be held at the San Anselmo Town Hall, San Anselmo, California for the purpose of discussing with the Contractor the scope of work, contract drawings, specifications, existing conditions, signs and traffic control, materials to be ordered, equipment to be used, and all essential matters pertaining to the prosecution of and the satisfactory completion of the project as required. The Contractor's representatives at this conference shall include all major superintendents for the work, including major subcontractors.

At this meeting, the Contractor shall provide an emergency contact list. The list shall contain the names, addresses fax numbers and phone numbers by which they may be reached 24 hours/day. The Contractor shall also provide the contact information for the local Insurance Agent(s) for the Contractor's and subcontractors' required insurance. The contact information shall include the insurance company name, the local agent's name, local phone and fax numbers and local address.

In addition, at this meeting the work plan, schedule and sequence of work will be reviewed.

An on-site preconstruction meeting may be held for the purpose of discussing site specific matters.

Replace section **8-1.04B Standard Start** with:

Complete all pre-mobilization requirements of the special Provisions within 15 days of the date that the Notice of Award is mailed to the Contractor.

The work site will become available to the Contractor on Tuesday September 6, 2022, which will be the first official work day. The time period between Award of Contract and September 6, 2022 will not be counted towards the working days for the project.

Submit a notice 72 hours before starting job site activities. If the project has more than 1 location of work, submit a separate notice for each location.

Diligently prosecute the work to final completion.

Add to section **8-1.10A General:**

It is agreed that, if all the work required by the contract is not finished or completed within the number of working days as set forth in the contract, damage will be sustained by the Town, and that it is and will be impracticable and extremely difficult to ascertain and determine the actual damage which the Town will sustain in the event of and by reason of such delay; and it is therefore agreed that the Contractor will pay to the Town, $1,900 for each and every calendar day's delay in finishing the work in excess of the number of working days prescribed in the Proposal and the Contract Agreement; and the Contractor agrees to pay said liquidated damages herein provided for, and further agrees that the Town may deduct the amount thereof from any moneys due or that may become due the Contractor under the contract.

Should the Contractor prepare to begin work at the regular starting time in the morning of any days on which inclement weather or the condition of the site prevents the work from beginning at the usual starting time, and the crew is dismissed, the Contractor will not be charged for a working day whether or not conditions should change thereafter and the major portion of the day could be considered to be suitable for construction operations.

If any subcontractor or any person employed by the Contractor fails or refuses to carry out the directions of the Engineer or appears to the Engineer to be incompetent or acts in a disorderly or improper manner, he shall be discharged immediately on demand by the Engineer, and such person shall not again be employed on the work.

No subcontractor will be allowed on the project that is not listed in the List of Subcontractors contained in the Proposal, unless approved in advance and in writing by the Engineer.

Neither the contract, nor any monies due, or to become due, under the contract, may be assigned by the Contractor without the prior consent and approval of the Town Council, nor in any event without the consent of the Contractor's surety or sureties, unless such surety or sureties have waived their right to notice or assignment.

Hours of work shall be between **8:00 AM** and **5:00 PM** Monday through Friday unless otherwise approved by the Engineer in writing.

No work is permitted between 5:00 PM Friday through 8:00 AM Monday. No weekend work or work on holidays observed by the Town will be allowed unless approved in advance in writing by the Town.

Except as provided for in Labor Code Section 1815, no worker employed at any time on this work by the Contractor or any subcontractor shall be required or permitted to work longer than eight hours in one calendar day or 40 hours in one calendar week. Pursuant to Labor Code Section 1813, the contractor shall forfeit twenty-five dollars ($25) for each violation of this restriction. As further required by Labor Code Section 1813, the Town shall report all such violations to the Division of Labor Standards Enforcement.

^^

9 PAYMENT

Add to section **9-1.01 General:**

It is mutually agreed between the parties to the contract that no certificate given or payments made under the contract, except the final certificate or final payment, shall be conclusive evidence of the performance of the contract, either wholly or in part, against any claim, and no payment shall be construed to be an acceptance of any defective work or improper materials.

Add to section **9-1.02A General:**

Payment for lump sum items shall be made for the completed work on a percentage basis, as determined by the Engineer with the full amount, excluding retainage, to be paid to the Contractor upon completion of the work as specified and shown. Contractor shall submit a breakdown for each lump sum bid item at the Pre-Construction Conference showing the amount for each principal category of work, in sufficient detail to provide a basis for determining progress payments. The breakdown shall separately include costs for the various items and include labor, materials, equipment, subcontracts, fixed cost elements, incidental expenses, and a proportionate share of the overhead and profit.

Replace Item 2 of paragraph 1 of section **9-1.03 Payment Scope:**

2. PLACs, Taxes, and business licenses. No tax exemption certificate nor any document

designed to exempt the Contractor from payment of any tax will be furnished to Contractor by the Town of San Anselmo, as to any tax on labor, services, materials, transportation or any other items furnished pursuant to this contract.

Add Item 3 to paragraph 3 of section **9-1.03 Payment Scope:**

3. Any resource or activity not specifically listed for a bid item in the special provisions, but required to complete the bid item, shall be included in the bid price for the item. Payment for a bid item includes payment for work in sections referenced by the section set forth by that bid item.

Replace the heading and the 1st paragraph of section **9-1.04D(3)** with:

9-1.04D(3) Equipment Not On the Job Site and Not Required for Original Contract Work
For equipment not on the job site at the time required to perform work paid by force account and not required for original Contract work, the time paid is the time the equipment is operated to perform work paid by force account and the time to return the equipment to its source when the work paid by force account is completed.

Replace item 2 in the 3rd paragraph of section **9-1.04D(3)** with:

2. Operated less than 4 hours is paid as 1/2 day

Replace section **9-1.04D(4)** with:

9-1.04D(4) Equipment Not On the Job Site and Required for Original Contract Work
For equipment not on the job site at the time required to perform work paid by force account and required for original Contract work, the time paid is the time:
1. To move the equipment to the location of work paid by force account plus an equal amount of time to move the equipment to a location on the job site or its source when the work paid by force account is completed
2. Equipment is operated to perform work paid by force account

Add to section **9-1.16A General:**

Prompt progress payment and prompt payment of withheld funds to subcontractors: A prime contractor or subcontractor shall pay a subcontractor not later than 7 days of receipt of each progress payment in accordance with the provision in Section 7108.5 of the California Business and Professions Code concerning prompt payment to subcontractors. The 7 days is applicable unless, a longer period is agreed to in writing. Any violation of Section 7108.5 shall subject the violating contractor or subcontractor to the penalties, sanction and other remedies of that section.

Add to section **9-1.16D Mobilization:**

The lump sum price for “Mobilization” shall include all mobilizations, remobilizations, and demobilizations.

Add to section **9-1.16E(1) General:**

The Town may withhold or, on account of later discovered evidence, nullify all or part of any certification made to the Contractor by the Town as to the amount determined to be due the Contractor, to such extent and period of time only as may be necessary to protect the Town from loss on account of:

(A) Defective work not remedied or uncompleted work;
(B) Claims filed or reasonable evidence indicating probable filing;
(C) Failure to properly pay Subcontractors or for material or labor;
(D) Reasonable doubt that the work can be completed for the balance then unpaid;
(E) Damage to the Town, other than damages sue to delays;
(F) Damage to another Contractor, or third party; or
(G) Nonpayment of prevailing wages.

Replace section **9-1.16F Retentions** with**:**

The Town will retain five (5) percent of the estimated value of the work done. An escrow agreement for security deposit in lieu of retention may be utilized if it was submitted with the Contract and in accordance with these special provisions.

Delete section **9-1.17B Payment before Final Estimate**

Replace the first paragraph of section **9-1.17C Proposed Final Estimate** with**:**

After the Engineer has made the final inspection as provided in Section 5-1.46, and determines that the contract work has been completed in all respects in accordance with the Plans, Specifications, and Special Provisions, the Engineer estimates the amount of work completed and shows the amount payable in a proposed final estimate based on:

1. Contract items
2. Payment adjustments
3. Work paid by force account or agreed price
4. Extra work
5. Deductions

Replace section **9-1.17(D)1 General** with:

If you accept the proposed final estimate or do not submit a claim statement within 30 days of receiving the estimate, the Engineer furnishes the final estimate to you and the Town pays the amount due, minus retention, within 30 days. This final estimate and payment is conclusive except as specified in sections 5-1.27, 6-3.06, and 9-1.21.

If you submit a claim statement within 30 days of receiving the Engineer's proposed final estimate, the Engineer furnishes a semifinal estimate to the Contractor and the Department pays the amount due per the semifinal estimate, minus retention, within 30 days. The semifinal estimate is conclusive as to the amount of work completed and the amount payable except as affected by the claims or as specified in sections 5-1.27, 6-3.06, and 9-1.21.

Within 60 days after the date of Contract Acceptance, and provided no claims, notices or liens are pending, the retention withheld shall be released. In the event of a dispute the Town may withhold from the final payment an amount not to exceed 150 percent of the disputed amount.

Pursuant to California Government Code section 8546.7, the California State Auditor, at the request of the Town or as part of any audit of the Town, all contract documents associated with the performance of this contract shall be subject to examination and audit by the California State Auditor within three years of final payment on the contract. The Town is also entitled to audit the Contractor’s project records in response to a construction claim or a Public Records Act request.

Replace paragraph 5 of section **9-1.17D(3) Final Determination of claims** with:

After the determination, the Engineer furnishes a final estimate to the Contractor and the Department pays the amount due, minus retention, within 30 days. The final estimate is conclusive as to the amount of work completed and the amount payable except as specified in sections 5-1.27, 6-3.06, and 9-1.21.

Add section **9-1.22 ARBITRATION**

In the event a dispute arises under this Contract, Contractor must file a Government Tort Claim pursuant to California Government Code section 900 *et seq*. as a prerequisite to filing a construction claim under California Public Contract Code sections 20104-20104.6.

All contracts valued at more than $15,000.00 between the general contractor and its subcontractors and suppliers shall include a provision that the subcontractors and suppliers shall be bound to the contractor to the same extent that the contractor is bound to the Town by all terms and provisions of this contract, including the arbitration provision.

If the Contractor's control of the work is terminated or he abandons the work and the contract work is completed in conformance with the provisions of Public Contract Code Section 10255 (State Contract Act), any dispute concerning the amount to be paid by the Town to the Contractor or his surety, under the provisions of Section 10258 of the Act, shall be subject to arbitration in accordance with the section of these Special Provisions entitled "Arbitration." The surety shall be bound by the arbitration award and is entitled to participate in such arbitration proceedings**.**

^^^

operations. Marin County requires non-potable water to be used for dust control, pressure testing of irrigation system, etc. Well water is available from the Town at Creek Park (Sir Francis Drake Boulevard side). Recycled water is available from the County of Marin at the Civic Center in San Rafael.

C. Electric Power Service from Existing System: Electric power shall be provided by the Contractor. Provide connections and extensions of services as required for construction operations.

1.3 INFORMATIONAL SUBMITTALS

A. Site Plan: Show temporary facilities, utility hookups, staging areas, and parking areas for construction personnel.

1.4 QUALITY ASSURANCE

A. Electric Service, If deemed necessary by the Contractor: Comply with NECA, NEMA, and UL standards and regulations for temporary electric service. Install service to comply with NFPA 70.

B. Tests and Inspections: Arrange for authorities having jurisdiction to test and inspect each temporary utility before use. Obtain required certifications and permits.

1.5 PROJECT CONDITIONS

A. Temporary Use of Permanent Facilities: Engage Installer of each permanent service to assume responsibility for operation, maintenance, and protection of each permanent service during its use as a construction facility before Owner's acceptance, regardless of previously assigned responsibilities.

PART 2 - PRODUCTS

2.1 MATERIALS

A. Chain-Link Fencing: Maximum 2-inch mesh, 11 gauge, galvanized-steel, chain-link fabric fencing; minimum 6 feet high.

B. Chain-Link Fence Posts: 0.148-inch- thick, galvanized-steel, pipe posts; minimum 2-3/8-inch-OD line posts and 2-7/8-inch- OD corner and pull posts. Provide embedded posts, minimum embedment -18”. Verify that posts will not conflict with existing utilities. In locations where embedded posts conflict with utilities, free standing fencing will be allowed, but it shall not interfere with pathway use by pedestrians.

PART 3 - EXECUTION

3.1 INSTALLATION, GENERAL

A. Locate facilities where they will serve Project adequately and result in minimum interference with performance of the Work. Relocate and modify facilities as required by progress of the Work.

B. Provide each facility ready for use when needed to avoid delay. Do not remove until facilities are no longer needed or are replaced by authorized use of completed permanent facilities.

3.2 TEMPORARY UTILITY INSTALLATION

A. General: Install temporary service or connect to existing service.

1. Arrange with utility company, and Owner, to make connections for temporary services.

B. Water Service: Install water service and distribution piping in sizes and pressures adequate for construction.

C. Sanitary Facilities: Provide temporary toilets, wash facilities, and drinking water for use of construction personnel. Comply with requirements of authorities having jurisdiction for type, number, location, operation, and maintenance of fixtures and facilities.

3.3 SUPPORT FACILITIES INSTALLATION

A. General: Comply with the following:

1. Construction for temporary offices, shops, and sheds, if used, located within construction area or within 30 feet of building lines shall be noncombustible according to ASTM E 136. Comply with NFPA 241.
2. Maintain support facilities, if used, in good condition, until Owner Representative schedules Substantial Completion inspection. Remove before Substantial Completion.

B. Temporary Roads and Paved Areas: Construct and maintain temporary roads and paved areas adequate for construction operations. Locate temporary roads and paved areas as indicated on Drawings.

1. Provide dust-control treatment that is nonpolluting and nontracking. Reapply treatment as required to minimize dust.

C. Traffic Controls: Comply with requirements of authorities having jurisdiction.

1. Protect existing site improvements to remain including curbs, pavement, and utilities.
2. Maintain access for fire-fighting equipment and access to fire hydrants.

D. Parking: Use designated areas of Owner's existing parking areas for construction personnel.

E. Project Signs: Unauthorized signs are not permitted.

1. Identification Signs: Install Town provided 24”x36” Project Info sign onto temp fencing, (three locations).
2. Temporary Signs: Provide other signs as provided by the Town and as required to inform public and individuals seeking entrance to Project.

a. Provide temporary, directional signs for construction personnel and visitors.

F. Waste Disposal Facilities: Provide waste-collection containers in sizes adequate to handle waste from construction operations. Comply with requirements of authorities having jurisdiction. Individual Project circumstances may require use of other construction aids.

3.4 SECURITY AND PROTECTION FACILITIES INSTALLATION

A. Protection of Existing Facilities: Protect existing vegetation, equipment, structures, utilities, and other improvements at Project site and on adjacent properties, except those indicated to be removed or altered. Repair damage to existing facilities.

B. Environmental Protection: Provide protection, operate temporary facilities, and conduct construction as required to comply with environmental regulations and that minimize possible air, waterway, and subsoil contamination or pollution or other undesirable effects.

C. Temporary Erosion and Sedimentation Control: Comply with requirements specified in Plans and Section 02230 "Site Clearing".

D. Temporary Erosion and Sedimentation Control: Provide measures to prevent soil erosion and discharge of soil-bearing water runoff and airborne dust to undisturbed areas and to adjacent properties and walkways, according to erosion- and sedimentation-control Drawings.

E. Stormwater Control: Comply with requirements of authorities having jurisdiction. Provide barriers in and around excavations and subgrade construction to prevent flooding by runoff of stormwater from heavy rains.

F. Site Enclosure Fence: Before construction operations begin, furnish and install site enclosure fence in a manner that will prevent people and animals from easily entering site except by entrance gates. Fence will be left in place to protect new turf installation until March 31, 2023.

1. Extent of Fence: As required to enclose entire Project site or portion determined sufficient to secure and accommodate construction operations. Verify that existing utilities will not be affected by direct embed posts.

2. Temporary Site Enclosure fence can terminate at existing backstops that are minimum 6’ height, if all dugouts and other gates that are part of the backstops are deemed secure by the contractor.

3. Tree Protection fence. Provide fencing so as to prevent damage to the limbs, trunk and surface roots of the indicated tree. The fencing shall be secured so that it stays in place and cannot be inadvertently adjusted during construction.
4. Maintain security by limiting number of keys and restricting distribution to authorized personnel. Furnish one set of keys to Owner.

G. Security Enclosure and Lockup: Install temporary enclosure around partially completed areas of construction. Provide lockable entrances to prevent unauthorized entrance, vandalism, theft, and similar violations of security. Lock entrances at end of each work day.

H. Barricades, Warning Signs, and Lights: Comply with requirements of authorities having jurisdiction for erecting structurally adequate barricades, including warning signs.

I. Temporary Enclosures: Provide temporary enclosures for protection and safety of construction, in progress and completed, from exposure, foul weather, other construction operations, and similar activities.

3.5 OPERATION, TERMINATION, AND REMOVAL

A. Supervision: Enforce strict discipline in use of temporary facilities. To minimize waste and abuse, limit availability of temporary facilities to essential and intended uses.

B. Maintenance: Maintain facilities in good operating condition until removal.

1. Maintain operation of temporary enclosures, heating, cooling, humidity control, ventilation, and similar facilities on a 24-hour basis where required to achieve indicated results and to avoid possibility of damage.

C. Termination and Removal: Remove each temporary facility when need for its service has ended, when it has been replaced by authorized use of a permanent facility, or no later than Substantial Completion. Complete or, if necessary, restore permanent construction that may have been delayed because of interference with temporary facility. Repair damaged Work, clean exposed surfaces, and replace construction that cannot be satisfactorily repaired.

1. Materials and facilities that constitute temporary facilities are property of Contractor. Owner reserves right to take possession of Project identification signs.
2. At Substantial Completion, repair, renovate, and clean permanent facilities used during construction period.

PART 4- MEASUREMENT AND PAYMENT

4.1 GENERAL

A. Measurement and Payment shall be as follows:

Mobilization/Temp Facilities/SWPPP/Staking/Tree Protection Lump Sum

END OF SECTION

^^^

1.04 DEFINITIONS

Utility: Any buried pipe, conduit or cable.

1.05 PROTECTION

A. Contact the Town Representative 48 hours prior to construction in areas of all existing underground utilities. Movement on construction machinery and equipment over pipes and utilities during construction shall be at the Contractor's risk. Perform all work adjacent to privately owned utilities as indicated in accordance with procedures outlined by utility company Excavation made with power-driven equipment is not permitted within two feet of any known subsurface construction including the building structure. For work immediately adjacent to or for excavations exposing a utility or other buried obstruction, use hand or light equipment excavation. Start hand or light equipment excavation on each side of the indicated obstruction and continue until the obstruction is uncovered or until clearance for the new grade is assured. Support uncovered lines or other existing work as affected by the contract excavation until approval for backfill is granted by the Town Representative. Report damage to utility lines or subsurface construction immediately to the Town Representative.

B. Shoring and Sheeting: Shoring and sheeting shall be done as may be necessary for the protection of the work and for the safety of the personnel, in accordance with the California State Labor Code.

1.06 FIELD MEASUREMENTS

Verify that all bench mark and intended elevations for the work are as shown on drawings.

PART 2 - PRODUCTS

2.01 FILL MATERIALS

Select non-expansive fill material: Fill material shall not contain rocks or rock fragments over 4" in greatest dimension and shall be predominately granular material that is nonexpansive in nature and contains no organic matter. The material should have a plasticity index of less than 15. If more material is required than is available from on-site excavation, then provide that material from approved sources.

2.02 BEDDING MATERIALS

Class 2 Aggregate Base, ¾ inch maximum, conforming to State of California, Department of Transportation Standard Specifications.

2.03 IMPERVIOUS SEAL

Impervious cohesive soil material or lean concrete conforming to State of California, Department of Transportation Standard Specifications.

PART 3 - EXECUTION

3.01 PREPARATION

A. Identify required lines, level, contours and datum.

B. Protect trees and other features remaining as a portion of final landscaping.

C. Maintain and protect above and below grade utilities which are to remain.

D. Cut out soft areas of subgrade not capable of insitu compaction. Backfill with structural fill and compact to density equal to or greater than requirements for subsequent backfill material.

3.02 EXCAVATION

A. Excavate subsoil required for utilities.

B. Cut trenches sufficiently wide to enable installation and allow inspection.

C. Hand trim excavation. Remove loose matter.

D. Remove lumped subsoil, boulders and rock (larger than 4”).

E. Stockpile excavated material in area designated by Town Representative and remove excess material not being used from site.

3.03 BACKFILLING

A. Install utility and bedding material in accordance with respective specification section.

B. Backfill trenches to contours and elevations with unfrozen materials.

C. Systematically backfill to allow maximum time for natural settlement. Do not backfill over porous, wet, frozen, or spongy subgrade surfaces.

D. Select fill: Place and compact materials in continuous layers not exceeding 8 inches compacted depth.

E. Maintain optimum moisture content of fill materials to attain required compaction density.

F. Remove surplus fill materials from site.

G. Leave fill material stockpile areas completely free of excess fill materials.

3.04 BACKFILLING WITH IMPERVIOUS SEAL

Utility trenches that pass underneath foundations shall be sealed with a compacted impervious cohesive soil material or lean concrete where the trench enters/exits the building perimeter. The impervious seal shall extend a minimum of 2 feet away from the building perimeter.

3.05 TOLERANCES

A. Top Surface of Backfilling Under Paved Areas: Plus or minus 0.05 feet from required elevations.

B. Top Surface of General Backfilling: Plus or minus 0.08 feet from required elevations.

3.06 FIELD QUALITY CONTROL

A. Field Sampling and testing: In addition to provisions set forth elsewhere in this contract, all sampling and testing specified hereinafter shall be conducted by an approved testing laboratory and the cost borne by the Contractor.

B. Compaction testing will be performed in accordance with ANSI/ASTM D1556 and ANSI/ASTM D1557 or ASTM D2922 and ASTM D3017.

C. If tests indicate Work does not meet specified requirements, remove work, replace, compact and retest at no cost to the Town.

D. Frequency of Tests: Perform density tests in randomly selected locations designated by the Town Representative. (Not to exceed 25 tests)

3.07 PROTECTION OF FINISHED WORK

A. Protect finished work.

B. Reshape and re-compact fills subjected to vehicular traffic during construction.

3.08 SCHEDULE

Utilities:

A. Unpaved Areas: Cover pipe and bedding with structural fill, in 8 inch lifts, compacted to 90 percent of ASTM D1557 maximum density.

B. On-site Paved Areas: Cover pipe and bedding with structural fill, in 8 inch lifts, compacted to 95 percent of ASTM D1557 maximum density

PART 4 – MEASUREMENT AND PAYMENT

4.1 GENERAL

A. Measurement and Payment shall be as follows:

Trenching-Irrigation	Lump Sum, as part of Irrigation System
Trenching-Drainage Laterals	Lump Sum, as part of Drainage Lateral Item
Trenching – Subsurface Drainage	Lump Sum, as part of Infield/Backstop Subdrains and Main Field Subdrain Items
Trenching – Storage Drainlines	Lump Sum as part of Storage Pipe Item
Trenching – Well Supply Pipe	Lump Sump as part of Well Supply Pipe

END OF SECTION

^^^

PART 1 - GENERAL

1.1 RELATED DOCUMENTS

A. Drawings and general provisions of the Contract, including General and Supplementary Conditions and Division 1 Specification Sections, apply to this Section.

1.2 SUMMARY

A. This Section includes the following:

1. Protecting existing vegetation to remain.

2. Clearing and grubbing.

3. Disconnecting, capping or sealing, and abandoning site utilities in place.

4. Disconnecting, capping or sealing, and removing site utilities.

B. Related Sections include the following:

1. Section 02300 "Earthwork".

1.3 DEFINITIONS

A. Topsoil: Natural or cultivated surface-soil layer containing organic matter and sand, silt, and clay particles; friable, pervious, and black or a darker shade of brown, gray, or red than underlying subsoil; reasonably free of subsoil, clay lumps, gravel, and other objects more than 1 inch in diameter; and free of weeds, roots, and other deleterious materials.

1.4 MATERIALS OWNERSHIP

A. Except for materials indicated to be stockpiled or to remain Owner's property, cleared materials shall become Contractor's property and shall be removed from the site.

1.5 SUBMITTALS`

A. Photographs or videotape, sufficiently detailed, of existing conditions of trees and plantings and adjoining construction that might be misconstrued as damage caused by site clearing and site improvements.

1.6 PROJECT CONDITIONS

A. Traffic: Minimize interference with adjoining roads, streets, walks, and other adjacent occupied or used facilities during site-clearing operations.

1. Do not close or obstruct streets, walks, or other adjacent occupied or used facilities without permission from Owner and authorities having jurisdiction.

2. Provide alternate routes around closed or obstructed traffic ways if

required by authorities having jurisdiction.

B. Salvable Improvements: Carefully remove items indicated to be salvaged and store on Owner's premises where indicated.

B. Notify utility locator service for area where Project is located before site clearing.

PART 2 - PRODUCTS (Not Applicable)

PART 3 - EXECUTION

3.1 PREPARATION

A. Protect and maintain benchmarks and survey control points from disturbance during construction.

B. Provide SWPPP measures to prevent soil erosion and discharge of soil-bearing water runoff or airborne dust to adjacent properties and walkways.

C. Locate and clearly flag trees and vegetation to remain or to be relocated.

D. Protect existing site improvements to remain from damage during construction.

1. Restore damaged improvements to their original condition, as acceptable to Owner.

3.2 UTILITIES

A. Engineer will arrange for disconnecting and sealing indicated utilities that serve existing systems before site clearing when requested by Contractor.

1. Verify that utilities have been disconnected and capped before proceeding with site clearing.

B. Locate, identify, disconnect, and seal or cap off utilities indicated to be removed.

1. Engineer will arrange to shut off indicated utilities when requested by Contractor.

C. Existing Utilities: Do not interrupt utilities serving facilities occupied by Owner or others unless permitted under the following conditions and then only after arranging to provide temporary utility services according to requirements indicated:

1. Notify Engineer not less than two days in advance of proposed utility interruptions.

2. Do not proceed with utility interruptions without Engineer’s written permission.

3.3 CLEARING AND GRUBBING

A. Remove obstructions and irrigation related equipment, to permit installation of new construction. Removal includes digging out obstructions and grubbing roots.

1. Do not remove shrubs, and other vegetation indicated to remain or to be relocated.

2. Cut minor roots and branches of trees indicated to remain in a clean and careful manner where such roots and branches obstruct installation of new construction.

3. Existing turf is to be thoroughly tilled into the existing topsoil to a minimum depth of 12”. Prior to tilling, the turf shall be allowed to dry out.

B. Fill depressions caused by clearing and grubbing operations with satisfactory soil material, unless further excavation or earthwork is indicated.

1. Place fill material in horizontal layers not exceeding 8-inch loose depth, and compact each layer to a density equal to adjacent original ground.

3.4 DISPOSAL

A. Disposal: Remove surplus soil material, unsuitable topsoil, obstructions, demolished materials, and waste materials, including trash and debris, and legally dispose of them off the Town’s property.

PART 4 – MEASUREMENT AND PAYMENT

4.1 GENERAL

A. Measurement and Payment shall be as follows:

Demolition Lump Sum

END OF SECTION

^^^

1.3 DEFINITIONS

A. Backfill: Soil materials used to fill an excavation.

1. Initial Backfill: Backfill placed beside and over pipe in a trench, including haunches to support sides of pipe.

2. Final Backfill: Backfill placed over initial backfill to fill a trench.

B. Bedding Course: Layer placed over the excavated subgrade in a trench before

laying pipe.

C. Borrow: Satisfactory soil imported from off-site for use as fill or backfill.

D. Excavation: Removal of material encountered above subgrade elevations.

1. Additional Excavation: Excavation below subgrade elevations as directed by Staff. Additional excavation and replacement material will be paid for according to Contract provisions for changes in the Work.

2. Bulk Excavation: Excavations more than 10 feet in width and pits more than 30 feet in either length or width.

3. Unauthorized Excavation: Excavation below subgrade elevations or beyond indicated dimensions without direction by Staff. Unauthorized excavation, as well as remedial work directed by Staff, shall be without additional compensation.

E. Fill: Soil materials used to raise existing grades.

F. Rock: Rock material in beds, ledges, unstratified masses, and conglomerate deposits and boulders of rock material 3/4 cu. yd. or more in volume that when tested by an independent geotechnical testing agency, according to ASTM D 1586, exceeds a standard penetration resistance of 100 blows/2 inches.

G. Structures: Buildings, footings, foundations, retaining walls, slabs, tanks, curbs, mechanical and electrical appurtenances, or other man-made stationary features constructed above or below the ground surface.

H. Subbase Course: Layer placed between the subgrade and base course for asphalt paving, or layer placed between the subgrade and a concrete pavement or walk.

I. Subgrade: Surface or elevation remaining after completing excavation, or top surface of a fill or backfill immediately below subbase, drainage fill, or topsoil materials.

J. Utilities include on-site underground pipes, conduits, ducts, and cables, as well as underground services within buildings.

1.4 SUBMITTALS

A. Product Data: For the following:

1. Each type of plastic warning tape.

2. Drainage fabric.

3. Separation fabric.

4. Sand bedding material

5. Drainage Fill (3/4” gravel)

B. Samples: For the following:

1. 5lb of specified sand.

2. 12-by-12-inch sample of drainage fabric.

1.5 QUALITY ASSURANCE

A. Geotechnical Testing Agency Qualifications: An independent testing agency qualified according to ASTM E 329 to conduct soil materials and rock-definition testing, as documented according to ASTM D 3740 and ASTM E 548.

1.6 PROJECT CONDITIONS

A. Existing Utilities: Do not interrupt utilities serving facilities occupied by Owner or others unless permitted in writing by Staff and then only after arranging to provide temporary utility services according to requirements indicated:

1. Notify Staff not less than two days in advance of proposed utility interruptions.

2. Do not proceed with utility interruptions without Staff’s written permission.

3. Contact utility-locator service for area where Project is located before excavating.

PART 2 - PRODUCTS

2.1 SOIL MATERIALS

A. General: Provide topsoil materials when sufficient satisfactory soil materials are not available from excavations.

B. Backfill and Fill: Satisfactory soil materials.

C. Drainage Fill: Washed, narrowly graded mixture of crushed stone, or crushed or uncrushed gravel; ASTM D 448; coarse-aggregate grading Size 57; with 100 percent passing a 3/4-inch sieve and 0 to 5 percent passing a No. 8 sieve.

D. Filter Material: Narrowly graded mixture of natural or crushed gravel, or crushed stone and natural sand.

2.2 ACCESSORIES

A. Warning Tape: Acid- and alkali-resistant polyethylene film warning tape manufactured for marking and identifying underground utilities, 6 inches wide and 4 mils thick, continuously inscribed with a description of the utility.

B. Drainage Fabric: Nonwoven geotextile, specifically manufactured as a drainage geotextile; made from polyolefins, polyesters, or polyamides; and with the following minimum properties determined according to ASTM D 4759 and referenced standard test methods:

1. Grab Tensile Strength: 110 lbf; ASTM D 4632.

2. Tear Strength: 40 lbf; ASTM D 4533.

3. Puncture Resistance: 50 lbf; ASTM D 4833.

4. Water Flow Rate: 150 gpm per sq. ft.; ASTM D 4491.

5. Apparent Opening Size: No. 50; ASTM D 4751.

PART 3 - EXECUTION

3.1 PREPARATION

A. Protect structures, utilities, sidewalks, pavements, and other facilities from damage caused by settlement, lateral movement, undermining, washout, and other hazards created by earthwork operations.

B. Protect subgrades and foundation soils against freezing temperatures or frost. Provide protective insulating materials as necessary.

C. Provide erosion-control measures to prevent erosion or displacement of soils and discharge of soil-bearing water runoff or airborne dust to adjacent properties and walkways.

3.2 DEWATERING

A. Prevent surface water and ground water from entering excavations, from ponding on prepared subgrades, and from flooding Project site and surrounding area.

B. Protect subgrades from softening, undermining, washout, and damage by rain or water accumulation.

1. Reroute surface water runoff away from excavated areas. Do not allow water to accumulate in excavations. Do not use excavated trenches as temporary drainage ditches.

2. Install a dewatering system to keep subgrades dry and convey ground water away from excavations. Maintain until dewatering is no longer required.

3.3 EXCAVATION, GENERAL

A. Unclassified Excavation: Excavation to subgrade elevations regardless of the character of surface and subsurface conditions encountered, including rock, soil materials, and obstructions.

1. If excavated materials intended for fill and backfill include unsatisfactory soil materials and rock, replace with satisfactory soil materials.

2. Earth excavation includes excavating pavements and obstructions visible on surface; underground structures, utilities, and other items indicated to be removed; together with soil, boulders, and other materials not classified as rock or unauthorized excavation.

3. Rock excavation includes removal and disposal of rock.

3.4 EXCAVATION FOR WALKS AND PAVEMENTS

A. Excavate surfaces under walks and pavements to indicated cross sections, elevations, and grades.

3.5 EXCAVATION FOR UTILITY TRENCHES

A. Excavate trenches to indicated gradients, lines, depths, and elevations.

B. Excavate trenches to uniform widths to provide a working clearance on each side of pipe or conduit. Excavate trench walls vertically from trench bottom to 12 inches higher than top of pipe or conduit, unless otherwise indicated.

1. Clearance: Minimum 2” around all pipe.

C. Trench Bottoms: Excavate trenches 6 inches deeper than bottom of pipe elevation to allow for bedding course. Hand excavate for bell of pipe.

3.6 STORAGE OF SOIL MATERIALS

A. Stockpile borrow materials and satisfactory excavated soil materials. Stockpile soil materials without intermixing. Place, grade, and shape stockpiles to drain surface water. Cover to prevent windblown dust.

1. Stockpile soil materials away from edge of excavations. Do not store within drip line of remaining trees.

3.7 BACKFILL

A. Place and compact backfill in excavations promptly, but not before completing the following:

1. Surveying locations of underground utilities for record documents.

2. Inspecting and testing underground utilities.

3. Removing trash and debris.

4. Removing temporary shoring and bracing, and sheeting.

5. Placement of bedding material.

3.8 UTILITY TRENCH BACKFILL

A. Place and compact bedding course on trench bottoms and where indicated. Shape bedding course to provide continuous support for bells, joints, and barrels of pipes and for joints, fittings, and bodies of conduits.

B. Place and compact initial backfill of subbase material, free of particles larger than 1 inch, to a height of 6 inches over the utility pipe or conduit.

1. Carefully compact material under pipe haunches and bring backfill evenly up on both sides and along the full length of utility piping or conduit to avoid damage or displacement of utility system.

C. Coordinate backfilling with utilities testing.

D. Fill voids with approved backfill materials while shoring and bracing, and as sheeting is removed.

E. Place and compact final backfill of satisfactory soil material to final subgrade.

F. Install warning tape directly above utilities, 12 inches below finished grade, except 6 inches below subgrade under pavements and slabs.

3.9 FILL

A. Preparation: Remove vegetation, topsoil, debris, unsatisfactory soil materials, obstructions, and deleterious materials from ground surface before placing fills.

B. Plow, scarify, bench, or break up surfaces so fill material will bond with existing material.

C. Place and compact fill material in layers to required elevations as follows:

1. Under grass and planted areas, use topsoil material.

3.10 MOISTURE CONTROL

A. Uniformly moisten or aerate subgrade and each subsequent fill or backfill layer before compaction to within 2 percent of optimum moisture content.

1. Do not place backfill or fill material on surfaces that are muddy, frozen, or contain frost or ice.

2. Remove and replace, or scarify and air-dry, otherwise satisfactory soil material that exceeds optimum moisture content by 2 percent and is too wet to compact to specified dry unit weight.

3.11 COMPACTION OF BACKFILLS AND FILLS

A. Place backfill and fill materials in layers not more than 8 inches in loose depth for material compacted by heavy compaction equipment, and not more than 4 inches in loose depth for material compacted by hand-operated tampers.

B. Place backfill and fill materials evenly on all sides of structures to required elevations, and uniformly along the full length of each structure.

C. Compact soil to not less than the following percentages of maximum dry unit weight according to ASTM D 1557:

D. Compact soil to not less than the following percentages of maximum dry unit weight according to ASTM D 698:

1. Under structures, building slabs, steps, and pavements, scarify and recompact top 12 inches of existing subgrade and each layer of backfill or fill material at 95 percent.

2. Under walkways, scarify and recompact top 6 inches below subgrade and compact each layer of backfill or fill material at 95 percent.

3. Under lawn or unpaved areas, scarify and recompact top 6 inches below subgrade and compact each layer of backfill or fill material at 85 percent.

3.12 GRADING

A. General: Uniformly grade areas to a smooth surface, free from irregular surface changes. Comply with compaction requirements and grade to cross sections, lines, and elevations indicated.

1. Provide a smooth transition between adjacent existing grades and new grades.

2. Cut out soft spots, fill low spots, and trim high spots to comply with required surface tolerances.

B. Site Grading: Slope grades to direct water away from buildings and to prevent ponding. Finish subgrades to required elevations within the following tolerances:

1. Lawn or Unpaved Areas: Plus or minus 1 inch.

3.13 SUBSURFACE DRAINAGE

A. Subsurface Drain: Place a layer of drainage fabric around perimeter of drainage trench as indicated. Place an appropriate depth course of filter material on drainage fabric to support drainage pipe. Encase drainage pipe in a minimum of 12 inches of gravel material and lap drainage fabric, overlapping at least 12 inches.

1. Compact each course of gravel material to 95 percent of maximum dry unit weight according to ASTM D 698.

B. Drainage Backfill: Place and compact filter material over subsurface drain, in width indicated, to within 12 inches of final subgrade. Overlay drainage backfill with one layer of drainage fabric, overlapping sides and ends at least 6 inches.

1. Compact each course of filter material to 95 percent of maximum dry density according to ASTM D 698.

2. Place and compact impervious fill material over drainage backfill to final subgrade.

3.14 FIELD QUALITY CONTROL

A. Testing Agency: San Anselmo School will engage a qualified independent geotechnical Staffing testing agency to perform field quality-control testing.

B. Allow testing agency to inspect and test subgrades and each fill or backfill layer. Proceed with subsequent earthwork only after test results for previously completed work comply with requirements.

C. Testing agency will test compaction of soils in place according to ASTM D 1556, ASTM D 2167, ASTM D 2922, and ASTM D 2937, as applicable.

D. When testing agency reports that subgrades, fills, or backfills have not achieved degree of compaction specified, scarify and moisten or aerate, or remove and replace soil to depth required; recompact and retest until specified compaction is obtained.

3.15 PROTECTION

A. Protecting Graded Areas: Protect newly graded areas from traffic, freezing, and erosion. Keep free of trash and debris.

B. Repair and reestablish grades to specified tolerances where completed or partially completed surfaces become eroded, rutted, settled, or where they lose compaction due to subsequent construction operations or weather conditions.

1. Scarify or remove and replace soil material to depth as directed by Staff; reshape and recompact.

C. Where settling occurs before Project correction period elapses, remove finished surfacing, backfill with additional soil material, compact, and reconstruct surfacing.

1. Restore appearance, quality, and condition of finished surfacing to match adjacent work, and eliminate evidence of restoration to the greatest extent possible.

3.16 DISPOSAL OF SURPLUS AND WASTE MATERIALS

A. Disposal: Remove surplus satisfactory soil and waste material, including unsatisfactory soil, trash, and debris, and legally dispose of it off Town property.

PART 4 – MEASUREMENT AND PAYMENT

4.1 GENERAL

A. Measurement and Payment shall be as follows:

Rough Grading	Lump Sum
Subsurface Drainage	Lump Sum, as part of Infield/Backstop Subdrains and Main Field Subdrains
Fine Grading	Lump Sum as part of Soil Prep/Fine Grading Item

END OF SECTION

^^^

1.02 RELATED SECTIONS

A. Section 02225 - Trenching

B. Section 02230 – Site Clearing

1.03 INCORPORATED DOCUMENTS

A. Requirements of General Provisions and Special Provisions shall apply to all work in this Section. Conform to the Provisions in Section 39, “Asphalt Concrete” of the State Standard Specifications.

B. Published specifications, standards, tests, or recommended methods of trade, industry, or governmental organizations apply to Work of this Section where cited by abbreviations noted below (latest editions apply).

1. State of California Department of Transportation: Standard Specifications, 2006 Edition (Caltrans SS).

2. State of California Department of Transportation California Test (DOT CT).

3. American Society for Testing and Materials (ASTM).

1.04 SUBMITTALS

A. Materials List: Submit copies of materials list, listing and identifying types and sources of materials proposed for the Work. Include material description and application instructions for pavement sealer.

B. Testing Laboratory Reports: Submit copies of laboratory test reports for asphalt concrete materials, mixtures, and in-place construction.

C. Mix Design: Submit mix design for asphalt concrete.

D. Material Certificates:

1. Provide copies of material certificates and material laboratory test reports.

2. Material certificates shall be signed by material producer and contractor, certifying that each material item complies with, or exceeds, specified requirements.

1.05 QUALITY ASSURANCE

A. Qualifications of Asphalt Concrete Producer: Use only materials that are furnished by a bulk asphalt concrete producer regularly engaged in production of hot-mix, hot-laid asphalt concrete.

B. Testing and Inspection Services:

1. Asphalt concrete paving shall be tested and inspected.

2. Include sampling and testing of all asphalt concrete materials proposed for use in the Work, and tests and calculation for asphalt concrete mixtures at Contractor’s expense.

C. Comply with the latest requirements of the following agencies insofar as they have jurisdiction over the work:

1. CAL-OSHA (The Federal Occupational Safety Health Act of 1970)

2. All other agencies having jurisdiction over the work.

D. Samples may be taken and/or tests may be performed by the Testing Laboratory at any time during or after pavement work to determine quality and compaction. If quality and/or compaction does not meet these Specifications, the Contractor shall remove defective work, replace it with satisfactory work, and pay for retesting.

E. No aggregate base, asphalt concrete, or concrete shall be placed until the subgrade ahs been observed by the Town Project Coordinator.

F. The Contractor shall employ a licensed Surveyor or Civil Engineer to lay out the work and establish the necessary markers, benchmarks, and stakes.

G. In addition to provisions set forth elsewhere in this Contract, all sampling and testing specified herein shall be conducted by a Town approved testing laboratory and cost borne by the Contractor.

1.06 JOB CONDITIONS

A. Weather Limitations:

1. Apply bituminous prime and tack coats only when ambient temperature in the shade is above 50 degrees F, and when the temperature has not been 35 degrees F or less for twelve hours immediately prior to application.

2. Do not apply prime and tack coats when base surface is wet or contains an excess of moisture that would prevent uniform distribution and required penetration.

3. Construct asphalt concrete surface course only when atmosphere temperature is above 50 degrees F, when underlying base is dry, and when weather is not rainy.

4. Base course may be placed when air temperature is above 30 degrees F and rising.

B. Grade Control: Establish and maintain required lines and grades for each course during construction operations.

1.07 COORDINATION

A. Do not commence placement of the aggregate base course until preparation and compaction of the subgrade has been accepted.

B. Do not apply prime coat until placement and compaction of the aggregate base course has been accepted.

1.08 PROTECTION

A. Protect products against damage during transportation, field handling, and installation of this work.

B. Protect adjacent existing and newly placed construction and finishes as necessary to prevent damage during installation of this work.

PART 2 - PRODUCTS

2.01 MATERIALS

A. Aggregate Base: Class 2, 3/4-inch maximum, conforming to Caltrans Specifications.

B. Base Primer: Liquid asphalt Type SC-70 conforming to Caltrans SS, Section 93.

C. Paint Binder or Tack Coat: Diluted asphaltic emulsion Type RS-1 conforming to Caltrans SS, Section 94.

Asphaltic emulsions shall be composed of a bituminous material uniformly emulsified with water and an emulsifying or stabilizing agent. Polymer modified asphaltic emulsion shall also contain a polymer.

D. Asphalt Concrete:

1. Surface Course: Type A, ½-inch maximum, medium grading, conforming to Caltrans SS, Section 39.

2. Base Course: Type A, ¾-inch maximum, medium grading, conforming to Caltrans SS, Section 39.

Aggregate – All aggregates shall be clean and free from decomposed materials, organic material and other deleterious substances. Coarse aggregate is material retained on the No. 4 sieve; fine aggregate is material passing the No. 4 sieve; and supplemental fine aggregate is added fine material passing the No. 30 sieve, including, but not limited to, cement and stored fines from dust collectors.

3. Paving Asphalt: PG 64-16 grade, steam refined, conforming to Caltrans SS, Section 92.

4. Mix Design: Comply with Caltrans SS, Section 93-3. The asphalt concrete mixture, composed of the aggregate proposed for use and the optimum amount of asphalt as determined by California Test 367.

E. Pavement Sealer: Asphalt Emulsion SS1h in conformance with Caltrans SS, Section 94. Asphaltic emulsions shall be composed of a bituminous material uniformly emulsified with water and an emulsifying or stabilizing agent. Polymer modified asphaltic emulsion shall also contain a polymer.

2.02 MIXING

Asphaltic Concrete: Proportion and mix asphaltic concrete in accordance with Reference Standards.

PART 3 – EXECUTION

3.01 INSPECTION

A. Verify that conditions are satisfactory for installation of asphalt concrete paving.

1. Confirm that concrete adjacent to paving has been installed.

2. Confirm that all embedded items are in place and at proper elevations prior to commencement of installation.

B. Do not proceed with the work of this Section until satisfactory conditions have been corrected.

3.02 ASPHALT CONCRETE PAVEMENT - SUBGRADE PREPARATION

Prepare subgrade in conformance with Section 02300 Earthwork of this Specification.

3.03 AGGREGATE BASE

Prepare aggregate base in conformance with Clatrans Specifications.

3.04 PRIME COAT AND PAINT BINDER

A. Uniformly apply prime coat, distributed at a rate of 0.20 to 0.50 gallons per square yard, over compacted sub-base surface.

B. Apply sufficient material to penetrate and seal, but not flood, the surface.

C. Apply paint binder by brush to contact surfaces of curbs, gutters, manholes, and other structures projecting into or abutting asphalt concrete pavement.

D. Allow surfaces to dry until paint binder material is in proper condition of tackiness to receive asphalt concrete mixture.

3.05 PREPARATION AND PLACEMENT OF MIX

A. Comply with the requirements of Caltrans SS, Section 39 for asphalt concrete pavements and overlays for spreading and compacting. Place mix in maximum 3-inch layers and compact.

B. Tolerance of finished grade shall be ¼-inch plus or minus at any point. At no point shall the surface fail to drain.

C. Asphalt concrete may be placed when the atmospheric temperature is lower than 50 degrees F, provided the asphalt concrete is placed directly into the asphalt paver hopper from the truck. Asphalt concrete many not be placed when the atmospheric temperature is below 40 degrees F.

3.06 SIGNS

Signs and posts shall be installed by the Contractor is accordance with the details shown on the plans and as directed by the Town.

3.07 CLEAN-UP

Keep work areas in workmanlike and safe condition so rubbish, wastes, and debris do not interfere with the work of others. Upon completion of work in this section, remove all rubbish, waste and debris resulting from the operations. Remove all equipment and implements of service and leave entire area in a neat, clean, acceptable condition to the satisfaction of the Town.

3.09 FIELD QUALIY CONTROL

Asphalt concrete pavement: Cracks, settling of surface, improper drainage, ridges or bumps, non-homogenous, spreading and sloppy connection to previously laid surfaces will be construed as improper workmanship and will not be acceptable. Remove work, replace and retest at no cost to the Town.

PART 4 – MEASUREMENT AND PAYMENT

4.01 GENERAL

A. Measurement and Payment shall be as follows:

AC Paving Lump Sum

END OF SECTION

^^^

D. PP: Polypropylene.

E. PS: Polystyrene.

F. PVC: Polyvinyl chloride.

1.4 SUBMITTALS

A. Product Data: For drainage conduit, drainage panels, and geotextile fabrics.

1. Perforated pipe.

2. Solid pipe.

3. Drainage conduits.

4. Geotextile fabrics.

1.5 COORDINATION- NA

PART 2 – PRODUCTS

2.1 MANUFACTURERS

A. The following requirements apply for product selection:

1. Available Manufacturers: Subject to compliance with requirements, manufacturers offering products that may be incorporated into the Work include, but are not limited to, the manufacturers specified.

2. Manufacturers: Subject to compliance with requirements, provide products by the manufacturers specified.

2.2 PIPING MATERIALS

A. Refer to various application articles in Part 3 for applications of pipe, tube, fitting, and joining materials.

2.3 DRAINAGE PIPES AND FITTINGS

A. Perforated, PE Pipe and Fittings: ASTM F 405, corrugated, for coupled joints.

1. Couplings: Manufacturer's standard, band type.

B. Perforated, PE Pipe and Fittings: ASTM F 667, corrugated, for coupled joints.

1. Couplings: Manufacturer's standard, band type.

2.4 SPECIAL PIPE COUPLINGS

A. Description: ASTM C 1173. Rubber or elastomeric sleeve and band assembly fabricated to match outside diameters of pipes to be joined.

2.5 CLEANOUTS

A. PVC Pipe: ASTM D 3034, PVC cleanout threaded plug and threaded pipe hub.

2.6 DRAINAGE CONDUIT

A. Pipe and Fittings: Perforated and corrugated, molded from HDPE complying with ASTM D 3350, with fittings and geotextile filter fabric jacket.

1. Fittings: HDPE with combination NPS 4 and NPS 6 outlet connection.

2. Couplings: Corrugated HDPE band.

B. Pipe and Fittings: Solid smoothwall, corrugated and molded from HDPE.

1. Size: 8 inches inside diameter.

2.7 SOIL MATERIALS

A. Drainage Fill: Washed, evenly graded mixture of crushed stone, or crushed or uncrushed gravel, ASTM D 448, coarse aggregate, Size No. 57, with 100 percent passing 3/4-inch sieve and not more than 5 percent passing No. 8 sieve.

2.8 GEOTEXTILE FILTER FABRICS

A. Woven or nonwoven geotextile filter fabric of PP or polyester fibers, or combination of both. Flow rates range from 110 to 330 gpm per sq. ft. when tested according to ASTM D 4491. Available styles are flat and sock.

PART 3 - EXECUTION

3.1 EXAMINATION

A. Examine surfaces and areas for suitable conditions where subdrainage systems are to be installed.

B. If subdrainage is required for landscaping, locate, and mark existing utilities, underground structures, and aboveground obstructions before beginning installation and avoid disruption and damage of services.

C. Proceed with installation only after unsatisfactory conditions have been corrected.

3.2 EARTHWORK

A. Excavating, trenching, and backfilling are specified in Division 2 Section "Earthwork."

3.3 SUBDRAINAGE SYSTEM APPLICATIONS

A. NPS 4 Piping:

1. Perforated, HDPE pipe and fittings, couplings, and coupled joints.

3.4 IDENTIFICATION

A. Materials and their installation are specified in Division 2 Section "Earthwork." Arrange for installation of green warning tapes directly over piping.

1. Install warning tape or detectable warning tape over ferrous piping.

2. Install detectable warning tape over nonferrous piping and over edges of underground structures.

3.5 LANDSCAPING DRAINAGE INSTALLATION

A. Install drainage pipe with a horizontal distance of at least 6 inches between pipe and trench walls. Grade bottom of trench excavations to required slope and compact to firm, solid bed for drainage system.

B. Drainage Fill: Place supporting layer of drainage fill over trench bottom to compacted depth of not less than 4 inches. After installing drainage piping, add drainage fill to top of pipe to perform tests. After satisfactory testing, cover piping to within 12 inches of finish grade. Place drainage fill in layers not exceeding 3 inches in loose depth; compact each layer placed.

1. Before installing drainage fill, lay flat-style geotextile filter fabric in trench and overlap trench sides. After installing drainage fill, wrap top of drainage fill with flat-style geotextile filter fabric.

C. Drainage Conduit: Provide trench width to allow installation of drainage conduit. Grade bottom of trench excavations to required slope and compact to firm, solid bed for drainage system.

D. Fill to Grade: Place native fill material over drainage fill. Place material in loose-depth layers not exceeding 6 inches. Thoroughly compact each layer. Fill to finish grade.

3.6 PIPING INSTALLATION

A. Install piping beginning at low points of system, true to grades and alignment indicated, with unbroken continuity of invert. Bed piping with full bearing in filtering material. Install gaskets, seals, sleeves, and couplings according to manufacturer's written instructions and other requirements indicated.

1. Landscaping Subdrainage: Install piping pitched down in direction of flow, at a minimum slope of 0.5 percent and with a minimum cover of 36 inches, unless otherwise indicated.

2. Lay perforated pipe with perforations down.

3. Lay open-joint pipe spaced as indicated on Drawings or, if not indicated, with 1/4-inch space between ends. Cover top two-thirds of joint opening with open-joint screening material and tie with corrosion-resistant wire.

4. Excavate recesses in trench bottom for bell ends of pipe. Lay pipe with bells facing upslope and with spigot end entered fully into adjacent bell.

B. Use increasers, reducers, and couplings made for different sizes or materials of pipes and fittings being connected. Reduction of pipe size in direction of flow is prohibited.

C. Install PE piping according to ASTM D 2321.

3.7 PIPE JOINT CONSTRUCTION

A. Join PE pipe, tubing, and fittings with couplings for soiltight joints according to AASHTO's "Standard Specifications for Highway Bridges," Division II, Section 26.4.2.4, "Joint Properties."

B. Join perforated, PE pipe and fittings with couplings for soiltight joints according to AASHTO's "Standard Specifications for Highway Bridges," Division II, Section 26.4.2.4, "Joint Properties"; or according to ASTM D 2321.

3.8 RETAINING-WALL AND LANDSCAPING SUBDRAINAGE CLEANOUT

INSTALLATION

A. Install cleanouts from subdrainage piping to grade. Locate cleanouts at beginning of piping run and at changes in direction. Install fittings so cleanouts open in direction of flow in piping.

3.9 CONNECTIONS

A. Piping installation requirements are specified in other Division 15 Sections. Drawings indicate general arrangement of piping, fittings, and specialties.

B. Connect low elevations of subdrainage system to solid storm drainage system.

3.10 FIELD QUALITY CONTROL

A. Testing: After installing drainage fill to top of pipe, test drain piping with water to ensure free flow before backfilling. Remove obstructions, replace damaged components, and repeat test until results are satisfactory.

3.11 CLEANING

A. Clear interior of installed piping and structures of dirt and other superfluous material as work progresses. Maintain swab or drag in piping and pull past each joint as it is completed. Place plugs in ends of uncompleted pipe at end of each day or when work stops.

PART 4- MEASUREMENT AND PAYMENT

4.1 GENERAL

A. Measurement and Payment shall be as follows:

Infield/Backstop Subdrain	Lump Sum
Main Field Subdrain	Lump Sum
Cleanouts	Lump Sum
Drainage Laterals	Lump Sum
Storage Pipe	Lump Sum
Well Supply Pipe	Lump Sum

END OF SECTION

^^^

SECTION 02810
IRRIGATION SYSTEMS

PART 1 - GENERAL

1.1 RELATED DOCUMENTS

A. Drawings and general provisions of the Contract, including General and Supplementary Conditions and Division 1 Specification Sections, apply to this Section.

1.2 SUMMARY

A. This Section includes piping, valves, sprinklers, specialties, controls, and wiring for automatic control irrigation system.

1.3 DEFINITIONS

A. Circuit Piping: Downstream from control valves to sprinklers, specialties, and drain valves. Piping is under pressure during flow.

B. Irrigation Main Piping: Downstream from point of connection to water distribution piping to, and including, control valves. Piping is under water-distribution-system pressure.

C. The following are industry abbreviations for plastic materials:

1. ABS: Acrylonitrile-butadiene-styrene plastic.
2. FRP: Fiberglass-reinforced plastic.
3. HDPE: High Density Polyethylene
4. PA: Polyamide (nylon) plastic.
5. PE: Polyethylene plastic.
6. PP: Polypropylene plastic.
7. PTFE: Polytetrafluoroethylene plastic.
8. PVC: Polyvinyl chloride plastic.
9. TFE: Tetrafluoroethylene plastic.

1.4 PERFORMANCE REQUIREMENTS

A. Design 100 percent water-coverage irrigation system for lawns and exterior plants indicated.

B. Location of Sprinklers and Specialties: Design location is approximate. Make minor adjustments necessary to avoid plantings and obstructions such as signs and light standards. Maintain 100 percent water coverage of turf and planting areas indicated.

C. Minimum Working Pressures: The following are minimum pressure requirements for piping, valves, and specialties, unless otherwise indicated:

1. Irrigation Main Piping: **200 psi**

2. Circuit Piping: **150 psi**

1.5 SUBMITTALS

A. Product Data: Include pressure ratings, rated capacities, and settings of selected models for the following:

1. General-duty valves.

2. Pipe

3. Specialty valves.

4. Control-valve boxes.

5. Sprinkler heads.

6. Controller.

7. Wiring and Electrical

B. Coordination Drawings: Show piping and major system components. Indicate interface and spatial relationship between piping, system components, adjacent utilities, and proximate structures.

C. Field quality-control test reports.

D. Operation and Maintenance Data: For irrigation systems, to include in emergency, operation, and maintenance manuals. Include data for the following:

1. Automatic-control valves.

2. Backflow Preventer.

3. Flow Sensor

4. Automatic Control Valves

5. Sprinkler heads.

6. Controller

1.6 QUALITY ASSURANCE

A. Electrical Components, Devices, and Accessories: Listed and labeled as defined in NFPA 70, Article 100, by a testing agency acceptable to authorities having jurisdiction, and marked for intended use.

1.7 DELIVERY, STORAGE, AND HANDLING

A. Deliver piping with factory-applied end caps. Maintain end caps through shipping, storage, and handling to prevent pipe-end damage and to prevent entrance of dirt, debris, and moisture.

B. Store plastic piping protected from direct sunlight. Support to prevent sagging and bending.

1.8 PROJECT CONDITIONS

A. Interruption of Existing Water Service: Do not interrupt water service to facilities occupied by the Town of San Anselmo or others unless permitted under the following conditions and then only after arranging to provide temporary water service according to requirements indicated:

1. Notify Engineer no fewer than two (2) days in advance of proposed interruption of water service.

2. Do not proceed with interruption of water service without Engineer's written permission.

PART 2 - PRODUCTS

2.1 MANUFACTURERS

A. In other Part 2 articles where titles below introduce lists, the following requirements apply to product selection:

1. Available Manufacturers: Subject to compliance with requirements, manufacturers offering products that may be incorporated into the Work include, but are not limited to, manufacturers specified.

2.2 PIPES, TUBES, AND FITTINGS

A. PVC Pipe: ASTM D 1785, PVC 1120 compound, Schedule 40, purple non-potable.

1. PVC Socket Fittings, Schedule 40: ASTM D 2466.

2.3 GENERAL-DUTY VALVES

A. Bronze Resilent Seat Gate Valves: MSS SP-80, Class 125, Type 1, non-rising stem, bronze body with solid wedge, threaded ends, and malleable-iron square peg shut off.

2.4 SPECIALTY VALVES

A. Automatic Control Valves: Nylon body, normally closed, diaphragm type with manual flow adjustment, and operated by 24-V ac solenoid and 2-wire decoder.

B. Bronze Automatic Control Valves: Cast-bronze body, normally closed, diaphragm type with manual flow adjustment, and operated by 24-V ac solenoid and 2-wire decoder.

C. Quick-Couplers: Factory-fabricated, bronze or brass, two-piece assembly. Include coupler water-seal valve; removable upper body with spring-loaded or weighted, rubber-covered cap with purple reclaimed water identification; hose swivel with ASME B1.20.7, 3/4-11.5NH threads for garden hose on outlet; and operating key.

1. Locking-Top Option: Vandal-resistant, locking feature. Include two (2) matching key(s).

2.5 CONTROL-VALVE BOXES

A. Plastic Control-Valve Boxes: Box and cover, with open bottom and openings for piping; designed for installing flush with grade, purple non-potable. Include size as required for valves and service.

1. Shape: Rectangular.

2. Sidewall Material: PE, ABS, or FRP.

3. Cover Material: PE, ABS or FRP.

Lettering: VALVE BOX; IRRIGATION

Label each valve with corresponding valve number.

4. Manufacturers:

Carson Industries LLC or equal.

B. Drainage Backfill: Cleaned gravel or crushed stone, graded from 3/8 inch minimum to 3/4 inch maximum.

2.6 SPRINKLERS

A. Description: Plastic housing and corrosion-resistant interior parts designed for uniform coverage over entire spray area indicated, matched precipitation rates at available water pressure, purple non-potable. See drawings.

1. Pop-up, Spray Sprinklers: Adjustable micro rotor spray pattern, with stainless-steel retraction spring and matched precipitation rates.

2. Pop-up, Rotary, Spray Sprinklers: Gear drive, full-circle and adjustable part-circle types with stainless steel risers.

2.7 AUTOMATIC-CONTROL SYSTEM

A. Description: Two wire shielded cable, fully automatic, high efficiency, weather based, flow sensor capable, self -adjusting programing, with rain sensor.

PART 3 - EXECUTION

3.1 EARTHWORK

A. Refer to Section 02300 "Earthwork" for excavating, trenching, and backfilling.

B. Install warning tape directly above pressure piping, 12 inches below finished grades, except 6 inches below subgrade under pavement and slabs.

C. Install piping and wiring in sleeves under sidewalks, roadways, parking lots, and railroads.

1. Install piping sleeves by boring or jacking under existing paving if possible.

D. Provide minimum cover over top of underground piping according to the following:

1. Irrigation Main Piping: Minimum depth of **24 inches** below finished grade.

2. Circuit Piping: **18 inches**.

3. Drain Piping: **12 inches** below finished grade.

4. Sleeves: **24 inches** below finished grade.

3.2 PREPARATION

A. Set stakes to identify locations of proposed irrigation system. Obtain Engineer's approval before excavation.

3.3 PIPING APPLICATIONS

A. Install components having pressure rating equal to or greater than system operating pressure.

B. Piping in control-valve boxes and aboveground may be joined with flanges instead of joints indicated.

C. Underground Irrigation Main Piping: Use the following piping materials for each size range:

1. NPS 4 and Smaller: Schedule 40, PVC pipe and socket fittings, and solvent-cemented joints.

D. Circuit Piping: Use the following piping materials for each size range:

1. NPS 2 and Smaller: Schedule 40, PVC pipe and socket fittings; and solvent-cemented joints.

2. NPS 2-1/2 to NPS 4: Schedule 40, PVC pipe and socket fittings; and solvent-cemented joints.

E. Underground Branches and Offsets at Sprinklers and Devices: Schedule 40, PVC pipe; threaded PVC fittings; and threaded joints.

F. Sleeves: Schedule 40 PVC pipe and socket fittings; and solvent-cemented joints.

G. Transition Fittings: Use transition fittings for plastic-to-metal pipe connections according to the following:

1. Couplings:

Underground Piping NPS 1-1/2 and Smaller: Manufactured fitting or coupling.

Underground Piping NPS 2 and Larger: AWWA transition coupling.

2. Fittings:

Aboveground Piping: Plastic-to-metal transition fittings.

Underground Piping: Union with plastic end of same material as plastic piping.

3. Transition fittings are specified in Division 2 Section "Piped Utilities -- Basic Materials and Methods."

H. Dielectric Fittings: Use dielectric fittings for dissimilar-metal pipe connections according to the following:

1. Underground Piping:

NPS 2 and Smaller: Dielectric couplings or dielectric nipples.

NPS 2-1/2 and Larger: Prohibited except in valve box.

2. Aboveground Piping:

NPS 2 and Smaller: Dielectric unions.

NPS 2-1/2 to NPS 4: Dielectric flanges.

3. Piping in Valve Boxes or Vaults:

NPS 2 and Smaller: Dielectric unions.

NPS 2-1/2 to NPS 4: Dielectric flanges.

4. Dielectric fittings are specified in Division 2 Section "Piped Utilities – Basic Materials and Methods."

3.4 VALVE APPLICATIONS

A. Underground, Shutoff-Duty Valves: Use the following:

1. NPS 2 and Smaller: Curb stop with tee head, curb-stop service box, and shutoff rod.

2. NPS 3 and Larger: AWWA cast-iron gate valve with elastomeric gaskets and stem nut, valve box, and shutoff rod.

B. Control Valves:

1. See Drawings.

3.5 PIPING INSTALLATION

A. Location and Arrangement: Drawings indicate location and arrangement of piping systems. Install piping as indicated unless deviations are approved on Coordination Drawings.

B. Install piping at minimum uniform slope of 0.5 percent down toward drain valves.

C. Install piping free of sags and bends.

D. Install groups of pipes parallel to each other, spaced to permit valve servicing.

E. Install fittings for changes in direction and branch connections.

F. Install unions adjacent to valves and to final connections to other components with NPS 2 or smaller pipe connection.

G. Install flanges adjacent to valves and to final connections to other components with NPS 2-1/2 or larger pipe connection.

H. Install dielectric fittings to connect piping of dissimilar metals.

I. Install underground thermoplastic piping according to ASTM D 2774.

J. Lay piping on solid subbase, uniformly sloped without humps or depressions.

K. Install PVC piping in dry weather when temperature is above 40 deg F 5 deg C. Allow joints to cure at least 24 hours at temperatures above 40 deg F 5 deg C before testing unless otherwise recommended by manufacturer.

3.6 VALVE INSTALLATION

A. Underground Gate Valves: Install in valve box with top flush with grade.

B. Control Valves: Install in control-valve box with top flush with grade.

3.7 SPRINKLER INSTALLATION

A. Install sprinklers at manufacturer's recommended heights.

3.8 CONNECTIONS

A. Drawings indicate general arrangement of piping, fittings, and specialties.

B. Tighten electrical connectors and terminals according to manufacturer's published torque-tightening values. If manufacturer's torque values are not indicated, use those specified in UL 486A and UL 486B.

3.9 LABELING AND IDENTIFYING

A. Equipment Nameplates and Signs: Install engraved plastic-laminate equipment nameplates and signs on each automatic controller.

1. Text: In addition to identifying unit, distinguish between multiple units, inform operator of operational requirements, indicate safety and emergency precautions, and warn of hazards and improper operations.

B. Warning Tapes: Arrange for installation of continuous, underground, detectable warning tape over underground piping, during backfilling of trenches.

C. Refer to Section 02300 "Earthwork" for warning tapes.

3.10 FIELD QUALITY CONTROL

A. Perform the following field tests and inspections and prepare test reports:

1. Leak Test: After installation, prior to backfilling, charge system and test for leaks. Repair leaks and retest until no leaks exist.

2. Operational Test: After electrical circuitry has been energized, operate controllers and automatic control valves to confirm proper system operation.

3. Test and adjust controls and safeties. Replace damaged and malfunctioning controls and equipment.

B. Remove and replace units and retest and reinspect as specified above.

3.11 STARTUP SERVICE

A. Verify that electrical wiring installation complies with manufacturer's submittal and installation requirements in Division 16 Sections.

B. Complete startup checks according to manufacturer's written instructions.

3.12 ADJUSTING

A. Adjust settings of controllers.

B. Adjust automatic control valves to provide flow rate of rated operating pressure required for each sprinkler circuit.

3.13 CLEANING

A. Flush dirt and debris from piping before installing sprinklers and other devices.

PART 4- MEASUREMENT AND PAYMENT

4.1 GENERAL

A. Measurement and Payment shall be as follows:

Irrigation System	Lump Sum

END OF SECTION

^^^

1. Section 02920 “Lawns and Grasses”

2. Section 02930 “Planting”

1.3 DEFINITIONS

A. The definitions of the following terms shall be as follows:

• Rough Grade: Soil level before amendments

• Fine Grade: Soil level after amendments

• Finish Grade: Top of sod

1.4 REGULATIONS AND STANDARDS

A. Regulations of Regulatory Agencies: Comply with State of California Administration Code, Title 8, Industrial Relations, Chapter 4, Sub-chapter 4, Construction Safety Orders, and with rules and regulations of all regulatory agencies having jurisdiction over the project.

1.5 TESTS, INSPECTIONS AND SUBMITTALS

A. Prior to commencing soil preparation operations, Contractor shall request a review by the Landscape Architect to verify specified limits and grades of work completed. If additional inspections or observations by the Engineer are required as a result of Contractor's non-compliance with these

Specifications, Contractor shall pay for such additional inspections or observations at no increase in contract sum.

B. If required on the plans, Contractor shall provide an agricultural suitability test for all soil to be used in planting areas.

C. The Contractor shall submit to the Engineer at least fourteen (14) calendar days prior to installation samples of materials for approval. For standard products, also submit the manufacturer's certified analysis. For other materials, submit an analysis by a recognized laboratory made in accordance with the current methods established by the Association of Official Agricultural Chemists.

D. The Contractor shall submit to the Engineer written certification stating quantity, type, composition, weight and origin of all amendments and chemicals delivered to the site for soil preparation work.

E. Verification of Material: The Contractor shall, upon demand, produce records to verify the ordering and delivery of specified quantities and types of material for this job.

1.6 GENERAL REQUIREMENTS AND JOB CONDITIONS

A. Contractor shall exercise caution and provide necessary safeguards to prevent injury to, or defacement of, existing site improvements, including planting and underground utilities. contractor shall repair or replace, at no increase in contract sum, property damaged as a result of his work.

B. Before commencing site work, locate underground utilities in order to preclude any possible damage. Do not use heavy equipment which may cause damage to existing facilities. Use hand excavation as required to minimize the possibility of damage to underground utilities.

C. Equip internal combustion motors and compressors with mufflers. Do not leave such equipment running under trees.

D. Areas to be planted shall be rough graded by the General Contractor. Rough grades may vary within a tolerance of 1 inch (25 mm) from the finished grade elevations shown on the Drawings. Areas to be planted shall be finish graded by the Landscape Contractor to the finish grades indicated on the drawings. Contractor to grade landscape area in such a manner as to direct drainage away from buildings and walkways. Contractor to grade landscape areas so as not to allow standing water. Minimum percentage of slope to all landscape areas shall be two percent (2%). Contractor to notify Engineer if he anticipates any drainage problems from site conditions prior to start of construction.

E. Before proceeding with the work: Contractor shall check rough graded areas and verify all dimensions and quantities. Contractor shall immediately inform the Engineer of any discrepancy between the Drawings and Specifications and actual conditions. Contractor shall perform no work in any area where there is such a discrepancy until approval has been given by the Engineer.

PART 2 - MATERIALS

2.1 TOPSOIL: The existing topsoil has had samples taken and its agricultural suitability has been determined. The test results, analysis, and recommendations are indicated ins section 3:

A. Top Soil Analysis: After approval of rough grading, the attached soils report recommendations shall be followed. Provide the quantities of soil amendment, fertilizer and other additives in accordance with the report.

2.2 COMMERCIAL FERTILIZER

Commercial fertilizer shall be commercially processed fertilizer and shall conform to applicable requirements of agricultural laws and regulations of the State of California.

A. Pre-Plant Fertilizer: Shall consist of the following percent by weight and shall be mixed by a commercial fertilizer supplier.

• Calcium Carbonate Lime

• 6-24-24 Mixed Fertilizer

B. Post-Planting Fertilizer: Complete fertilizer, fifty percent of the nitrogen to be derived from natural organic sources or urea-form. available phosphoric acid shall be from superphosphate, bone or tankage. Potash shall be derived from muriate of potash containing 60 percent potash:

• 6-24-24 Mixed Fertilizer

2.3 QUANTITIES OF AMENDMENT AND FERTILIZER

A. Roto-till thoroughly the following into the top 6 inches (150 mm) of all planting areas, including turf areas:

Amount per 1000sf	
35 pounds	6-24-24 fertilizer (Best' Cropmaker)
35 pounds	Calcium Carbonate Lime (Oyster shell flour)

2.4 IMPORTED SAND FOR SUBSURFACE DRAINAGE TRENCH

A. Graded sand as follows, (depth of sand to be 12” minimum):

Particle Size	% by weight
>2.0mm	1.0
1.0-2.0mm	1.0
0.5-1.0 mm	3.0
0.25-0.5mm	32.0
0.05-0.25mm	58.0
Silt	3.0
Clay	2.0

PART 3 - EXECUTION

3.1 CLEARING

In all areas to be planted, remove and properly dispose of all rocks and paving materials 1 inch (25 mm) in any dimension, and all weeds, debris and other unwanted or noxious material.

3.2 SOIL PREPARATION

A. Soil Moisture Content: Do not work soil when moisture content is so great that excessive compaction will occur, or when the soil is so dry that clods will not break readily o dust will form in the air. Apply water as required to prevent the formation of an airborne dust nuisance and to provide ideal soil moisture content for tilling.

B. Subgrade Scarification: All turf areas to be planted shall have the supplemental irrigation turned off and the existing turf be allowed to dry. The remaining dry turf and existing soil is to be scarified and tilled to a minimum depth of 12 inches (200 mm) prior to soil preparation and planting. Following scarifying, all areas to be planted shall be tilled to break down clods. Any rocks over 1 inch (25 mm) in any dimension, gravel, and miscellaneous debris shall be removed. Any areas which, subsequent to initial scarification become recompacted as a result of having been subjected to vehicular traffic shall be re-ripped. If unsuitable soil is unearthed during this process, notify the Engineer for review.

C. Topsoil Layer: All areas to be planted shall finish with site soil placed to eighty five percent (85%) maximum relative compaction, as determined by Test Method No. California 216. Minimum depth of topsoil layer shall be 8 inches (150 mm) unless indicated otherwise in the Drawings.

D. Incorporate commercial fertilizer and soil amendments as specified, cultivate top 6 inches (150 mm) of soil in all areas, and remove all sticks, stones over 1 inch (25 mm) in any dimension, roots, weeds and other foreign material.

3.3 FINE GRADING

A. After completion of pavements and structures, areas to be planted shall be graded and shaped by blading, dragging, and other means. Final grade surfaces shall be uniform and smooth and shall conform to slopes and final grades indicated on the Drawings after soil preparation, settlement, and planting have occurred. Minor adjustments to final grades shall be made at the direction of the Engineer if required.

B. Fine grades shall provide for surface drainage of planting areas. Contractor shall correct drainage condition which may be detrimental to the growth of plants or which result in retention of water.

C. Fine grades of planting areas shall be 1.5 inches below adjacent pavement or tops of curbs after settlement to accommodate sod installation with 1 inch (25 mm) left below walks, curbs, etc.

D. Tops and toes of all slopes shall be rounded to produce a smooth, continuous, and natural-appearing transition between slopes and relatively level areas.

E. Fine grading shall direct water away from all structures and walks and toward drainage structures.

F. Contractor shall obtain approval by Engineer for fine grades before any planting begins.

3.4 WATERING AND SPRAYING

A. Watering Period: At completion of soil preparation and finish grading, water soil using cycle/soak method for 4 days. Soil shall remain moist to a minimum depth of 12 inches throughout watering period.

B. Weed Removal: At the end of the watering period, cut/pull all weeds, to eliminate all weed plant growth and roots including both broad leaf and invasive grass seedlings.

PART 4- MEASUREMENT AND PAYMENT

4.1 GENERAL

A. Measurement and Payment shall be as follows:

Rough Grading	Lump Sum
Soil Prep/Fine Grading	Lump Sum
Infield Mix Repair	Cubic Yard
Infield Mix (New)	Square Foot

END OF SECTION

^^^

D. Qualification Data: For landscape Installer.

E. Planting Schedule: Indicating anticipated planting dates for each type of planting.

1.5 QUALITY ASSURANCE

A. Installer Qualifications: A qualified landscape installer whose work has resulted in successful lawn establishment.

1. Installer's Field Supervision: Require Installer to maintain an experienced full-time supervisor on Project site when planting is in progress.

1.6 DELIVERY, STORAGE, AND HANDLING

A. Sod: Harvest, deliver, store, and handle sod according to requirements in TPI's "Specifications for Turfgrass Sod Materials" and "Specifications for Turfgrass Sod Transplanting and Installation" in its "Guideline Specifications to Turfgrass Sodding."

1.7 SCHEDULING

A. Weather Limitations: Proceed with planting only when existing and forecasted weather conditions permit and will not damage graded and prepared soil.

1.8 LAWN MAINTENANCE

A. Begin maintenance immediately after each area is planted and continue until acceptable lawn is established, but for not less than the following periods:

1. Sodded Lawns: 90 days from date of Substantial Completion.

B. Maintain and establish lawn by watering, fertilizing, weeding, mowing, trimming, replanting, and other operations. Roll, regrade, and resod bare or eroded areas.

C. Watering: Provide and maintain irrigation system to convey water from sources and to keep lawn uniformly moist to a depth of 4 inches.

D. Mow lawn as soon as top growth is tall enough to cut. Repeat mowing to maintain specified height without cutting more than 40 percent of grass height. Remove no more than 40 percent of grass-leaf growth in initial or subsequent mowings. Do not delay mowing until grass blades bend over and become matted. Do not mow when grass is wet. Schedule initial and subsequent mowings to maintain the following grass height:

1. Mow grass 2 inches high.

E. Lawn Postfertilization: Apply fertilizer after initial mowing and when grass is dry.

1. Use fertilizer that will provide actual nitrogen of at least 1 lb/1000 sq. ft. to lawn area.

PART 2 - PRODUCTS

2.1 TURFGRASS SOD

A. Turfgrass Sod: Complying with TPI's "Specifications for Turfgrass Sod Materials" in its "Guideline Specifications to Turfgrass Sodding." Furnish viable sod of uniform density, color,

and texture, strongly rooted, grown on a sand base and capable of vigorous growth and development when planted on a soil base. No netting is allowed.

B. Turfgrass Species for soil based turf. Rhyzomacous Tall Fescue.

2.2 SOIL AMENDMENTS AND FERTILIZERS

A. See Section 02910 “Soil Preparation of Planting Areas”.

PART 3 - EXECUTION

3.1 EXAMINATION

A. Examine areas to receive lawns and grass for compliance with requirements and other conditions affecting performance. Proceed with installation only after unsatisfactory conditions have been corrected.

3.2 PREPARATION

A. Protect structures, utilities, sidewalks, pavements, and other facilities, trees, shrubs, and plantings from damage caused by planting operations.

B. Provide erosion-control measures to prevent erosion or displacement of soils and discharge of soil-bearing water runoff or airborne dust to adjacent properties and walkways.

3.3 LAWN PREPARATION

A. Limit lawn subgrade preparation to areas to be planted.

1. Complete required soil preparation and sand section installation.

B. Finish Grading: Grade planting areas to a smooth, uniform surface plane with loose, uniformly fine texture. Grade to within plus or minus 0.20 inch of finish elevation. Roll and rake, remove ridges, and fill depressions to meet finish grades. Limit fine grading to areas that can be planted in the immediate future.

C. Moisten prepared lawn areas before planting if soil is dry. Water thoroughly and allow surface to dry before planting. Do not create muddy soil.

D. Restore areas if eroded or otherwise disturbed after finish grading and before planting.

3.4 OVER-SEEDING

A. Sow seed with slit seeding machine.

1. Do not use wet seed or seed that is moldy or otherwise damaged.

B. Rake seed lightly into top 1/8 inch of topsoil, roll lightly, and water with fine spray.

3.5 SODDING

A. Lay sod within 24 hours of harvesting. Do not lay sod if dormant or if ground is frozen or muddy.

B. Lay sod to form a solid mass with tightly fitted joints. Butt ends and sides of sod; do not stretch or overlap. Stagger sod strips or pads to offset joints in adjacent courses. Avoid damage to subgrade or sod during installation. Tamp and roll lightly to ensure contact with subgrade, eliminate air pockets, and form a smooth surface. Work sifted soil or fine sand into minor cracks between pieces of sod; remove excess to avoid smothering sod and adjacent grass.

C. Saturate sod with fine water spray within two hours of planting. During first week, water daily or more frequently as necessary to maintain moist soil to a minimum depth of 1-1/2 inches below sod.

3.6 SATISFACTORY LAWNS

A. Satisfactory Sodded Lawn: At end of maintenance period, a healthy, well-rooted, even-colored, viable lawn has been established, free of weeds, open joints, bare areas, and surface irregularities.

B. Reestablish lawns that do not comply with requirements and continue maintenance until lawns are satisfactory.

3.7 CLEANUP AND PROTECTION

A. Promptly remove soil and debris created by lawn work from paved areas. Clean wheels of vehicles before leaving site to avoid tracking soil onto roads, walks, or other paved areas.

B. Erect barricades and warning signs as required to protect newly planted areas from traffic. Maintain barricades throughout maintenance period and remove after lawn is established.

C. Remove erosion-control measures after grass establishment period.

PART 4- MEASUREMENT AND PAYMENT

4.1 GENERAL

A. Measurement and Payment shall be as follows:

Sod Turf	Lump Sum
90 Day Maintenance	Lump Sum

END OF SECTION

^^^

2.1 LUMBER, GENERAL

A. Comply with DOC PS 20 and with grading rules of lumber grading agencies certified by ALSC's Board of Review as applicable. If no grading agency is indicated, comply with the applicable rules of any rules-writing agency certified by ALSC's Board of Review.

1. Factory mark each item with grade stamp of grading agency.

2. Provide dressed lumber, S4S, unless otherwise indicated.

B. Maximum Moisture Content:

1. Boards: 15 percent.

2. Dimension Lumber: 19 percent

C. LUMBER

1. Boards:

A. Redwood, Heart B or Select Heart; RIS.

B. Western red cedar, Grade A; NLGA, WCLIB, or WWPA.

D. FASTENERS

1. General: Provide fasteners of size and type indicated, acceptable to authorities having jurisdiction, and that comply with requirements specified in this article for material and manufacture. Provide nails or screws, in sufficient length, to penetrate not less than 75% of total dimension of wood depth, into wood substrate.

A. Use fasteners with hot-dip zinc coating complying with ASTM A 153/A 153M or ASTM F 2329 unless otherwise indicated.

E. METAL ACCESSORIES

1. Form Stakes

PART 3 - INSTALLATION, GENERAL

Set work to required levels and lines, with members plumb, true to line, cut, and fitted. Fit work to other construction; scribe and cope as needed for accurate fit.

PART 4- MEASUREMENT AND PAYMENT

4.1 GENERAL

A. Measurement and Payment shall be as follows:

Wood Header at Restroom, Field 3, and Restroom	Lump Sum
Wood Header at AC Paving	Lump Sum as Part of AC Paving Bid Item

END OF SECTION

^^^

Unless arrangements for disturbance of areas outside the project limits are made by the Town and made part of the contract, it is expressly agreed that the Town assumes no responsibility whatsoever to you or any property owner with respect to any arrangements made between you and a property owner to allow disturbance of areas outside the project limits. Information in this section shall be included in any arrangement.

Add to section 13-1.03D:

You shall be responsible for penalties assessed or levied on you or the Town as a result of your failure to comply with the provisions in this section “Water Pollution Control,” including, but not limited to, compliance with the applicable provisions of the Manuals, and Federal, State, and local laws, regulations and requirements as set forth therein. See “Retention of Funds” sub-section later in this special provision.

Penalties as used in this section shall include fines, penalties and damages, whether proposed, assessed, or levied against you or the Town, including those levied under the Federal Clean Water Act and the State Porter-Cologne Water Quality Control Act, by governmental agencies or as a result of citizen suits. Penalties shall also include payments made or costs incurred in settlement for alleged violations of the Manuals, or applicable laws, regulations, or requirements. Costs incurred could include sums spent instead of penalties, in mitigation or to remediate or correct violations.

Contractor must train employees/subcontractors on the water pollution prevention requirements contained in these provisions. The Contractor must inform all subcontractors of the water pollution prevention contract requirements and must include appropriate subcontract provisions to ensure that these requirements are met.

Add to section 13-2 "Water Pollution Control Program":

It is anticipated that the project will disturb less than 5 acres of soil, and have an ‘erosivity waiver’ and therefore a SWPPP would not be required unless triggered as described in Section 13-2.03.

Contractor shall prepare a Water Pollution Control Program.

Notwithstanding any other remedies authorized by law, the Town may retain money due to you under the contract, in an amount determined by the Town, up to and including the entire amount of Penalties proposed, assessed, or levied as a result of your violation of the Permit, the Manuals, or Federal or State law, regulations or requirements. Funds may be retained by the Town until final disposition has been made as to the Penalties. You shall remain liable for the full amount of Penalties until such time as they are finally resolved with the entity seeking the Penalties.

Retention of funds for failure to conform to the provisions in this section, "Water Pollution Control," shall be in addition to the other retention amounts required by the contract. The amounts retained from you for failure to conform to provisions in this section will be released for payment on the next monthly estimate for partial payment following the date when an approved WPCP has been implemented and maintained, and when water pollution has been adequately controlled, as determined by the Engineer.

When a regulatory agency identifies a failure to comply with the Permit and modifications thereto, the Manuals, or other Federal, State or local requirements, the Town may retain money due to you, subject to the following:

A. The Town will give you 30 days' notice of the Town's intention to retain funds from partial payments which may become due to you prior to acceptance of the contract. Retention of funds from payments made after acceptance of the contract may be made without prior notice to you.

B. No retention of additional amounts out of partial payments will be made if the amount to be retained does not exceed the amount being withheld from partial payments pursuant to Section 9-1.16 of the Standard Specifications and these special provisions.

C. If the Town has retained funds, and it is subsequently determined that the Town is not subject to the entire amount of the Costs and Liabilities assessed or proposed in connection with the matter for which the retention was made, the Town shall be liable for interest on the amount retained for the period of the retention. The interest rate payable shall be 6 percent per annum.

During the first estimate period that you fail to conform to the provisions in this section, "Water Pollution Control," the Town may retain an amount equal to 25 percent of the estimated value of the contract work performed.

Replace Section 13-3.04 "Payment" with:

The contract lump sum price paid for **SWPPP** shall include full compensation for furnishing all labor, materials, tools, equipment, and incidentals, and for doing all the work required as specified in Section 13, including preparing the water pollution control plan and all work necessary for water pollution control, as shown on the plans, as specified in the Specifications, and as directed by the Engineer, and no additional compensation will be made therefor.

Replace Paragraph 1 of Section 13-4 "Job Site Management" with

Section 13-4 includes specifications for performing job site management, including water pollution control management of : spill prevention and control, material, material storage, stockpiles, paint waste, asphalt concrete waste, HMA waste, PCC waste; sanitary and septic waste; liquid waste; nonstormwater, water control conservation; illicit connection and illegal discharge detection and reporting; vehicle and equipment cleaning; vehicle and equipment fueling and maintenance; material and equipment used over water; structure removal over or adjacent to water, paving, sealing, sawcutting, grooving and grinding activities, thermoplastic striping and pavement markers; Pile driving; Concrete curing; Concrete finishing; Sweeping; and dewatering.

Add to section 13-4.03C(3) "Stockpile Management":

Unless authorized by the Engineer, stockpiling shall be limited to material necessary for the day's work. The Contractor shall propose designated areas of the project site, for approval by the Engineer.

Add to section 13-4.03D(3) " Concrete Waste ":

Perform washout of concrete trucks off site where discharge is controlled and not permitted to discharge into the storm drain system.

Add to section 13-4.03E "Vehicle and Equipment Fueling and Maintenance":

The Contractor must inspect vehicles and equipment arriving on-site for leaking fluids and must promptly repair leaking vehicles and equipment. Drip pans must be used and replaced frequently enough to catch leaks. If leaks cannot be repaired immediately, remove the vehicle or equipment from the job site.

Add to section 13-4.03F "Sweeping":

At the end of each working day or as directed by the Engineer, the Contractor must clean and sweep roadways and on-site paved areas of all materials attributed to or invoiced in the work. The Contractor must not use water to flush down streets in place of street sweeping.

^^

15 EXISTING FACILITIES

Add to section 15-1.01:

Existing Utilities:

The location of all existing underground utilities may not be shown on the Plans. It is not the intent of the plans to show the exact location of existing or relocated utilities. Do not assume that all utilities have been identified on the plans. The Engineer assumes no responsibility therefor. You are responsible for verifying the actual location and depth in the field of all utilities.

Be cognizant of the existing overhead and underground utility lines in the proximity of the work area and take all precautions, as necessary, to not disturb these facilities.

Notify Underground Service Alert prior to any excavation. Call 811 and follow the USA North's California Excavation Manual and the specifications. Prior to starting an excavation, examine the excavation site for physical evidence (manholes, valve covers, water meters, fire hydrants, sewer cleanouts, storm drains, vaults, utility maintenance boxes, pole risers, trench cuts etc.) that would indicate the existence of underground facilities. You must excavate, as cautiously and prudently as possible.

Where excavations are performed in the vicinity of underground utility mains and/or services, perform initial hand dug exploratory excavations to determine their exact depth and location. Exercise extreme care to avoid damage to all utility facilities. It is your responsibility to make repairs to any facilities damaged by your operation, at your cost. The Town of San Anselmo will not reimburse you for this work. If you cannot locate an underground facility whose presence is indicated on the plan or as marked by USA, you must notify the Engineer in writing.

Landscape Restoration

Full compensation for Existing Facilities shall be considered as included in the various items of work and no separate payment will be made thereof unless otherwise noted.

Full compensation for Landscape Restoration shall be considered as included in the various items of

work and no separate payment will be made therefor.
Full compensation for complying with all other provisions of this section shall be considered as included in the various contract items of work and no separate payment will be made therefor.

Add to section 15-2.10B:

Utility companies reserve the right to perform the work using their own forces after the contract is awarded. You must notify the utility agencies prior to start of construction for any coordination effort and to determine if the utility owners will perform the work using their own forces. Advise the Town of the utility owner's response prior to the start of construction. If the owners chose to use their own forces, then prior to placing of asphalt concrete, notify utility agencies a minimum of five (5) working days in advance of paving operations so that the affected agencies can be prepared to reset covers to grade following paving.

Contact information of utility companies is:

PG&E:	MDRa@pge.com
MMWD	amitchell@marinwater.org aanaya@marinwater.org
RVSD	pbenedetti@rvsd.org dgavallos@rvsd.org

Obtain a response. Advise the Town if assistance with additional contact information is necessary

All manhole and other utility covers encountered in the area of HMA must be carefully referenced out using spray chalk or similar non-permanent marking media prior to disturbance by the Contractor. Notify the Engineer that the referencing is complete at least 2 days prior to work that may disturb the utility covers. Using the reference markings, the locations of the covers must be painted on the pavement surface immediately after paving to assure they can be found in an emergency.

Covers must be adjusted so that there will not be any perceptible difference in elevation between the finished pavement surface and the cover. The Engineer shall be the sole judge of the acceptable degree of smoothness of passage of a motor vehicle over the adjusted covers.

Portland cement concrete used for adjusting covers must be Class B, 5 sack minor concrete conforming to the provisions in State Standard Specification Section 51, "Concrete Structures," and must be 1 inch maximum grading specified in Section 90-1.02C(4)(d), "Combined Aggregate Grading" of the specifications.

Mortar used in resetting manhole covers must conform to the requirements of the specifications, including Section 51.

Precast concrete elements must conform to the requirements of the specifications, including Section 70-4.

Salvaged materials which are undamaged may be reinstalled as directed by the Engineer. Structures built of cast-in-place or precast concrete and brick or vitrified clay pipe parts must be replaced in kind, unless otherwise permitted by the owners of the facilities.

Dirt, rocks or debris shall not be permitted to enter sewer or storm drain lines. When manhole adjustment involves excavation or concrete removal, a temporary cover must be placed to prevent entry of material into the manhole and sewer pipe.

During sealing or paving operations, all surface structures must be protected and no adhesive material shall be permitted to fill the joint between the frame and cover.

Cooperate with utility companies working within and around the project area. In the event a utility company elects to have you perform the work by written confirmation, you will be responsible for adjusting the covers. You must perform the work according to said utility companies' standards.

In the event that work by others causes a delay in your operation, you will be granted a time extension but shall not be entitled to a Delay per Section 8-1.07 of the State Standard Specifications due to the progress or operations of others.

WATER VALVE
Water valve covers must be adjusted to grade per Marin Municipal Water District Standards, as shown on the plans, and as directed by the Engineer.

SANITARY SEWER MANHOLES
Sanitary Sewer Manholes must be adjusted to grade per Ross Valley Sanitary Sewer District, Sanitary District No. 1 of Marin County Standard Specifications and Drawings, as shown on the plans, and as directed by the Engineer.

SANITARY SEWER CLEAN OUTS
Sanitary Sewer Clean Outs (rod holes) must be adjusted to grade per Ross Valley Sanitary Sewer District, Sanitary District No. 1 of Marin County Standard Specifications and Drawings, as shown on the plans, and as directed by the Engineer.

STORM DRAIN MANHOLES
Storm Drain Manholes must be adjusted to grade as shown on the plans and as directed by the Engineer.

IDENTIFYING, REPLACING MONUMENT, AND ADJUSTING MONUMENT COVER
Protect all monuments whether noted on the plans or not. Monuments that will be disturbed must be identified by the Contractor to the Engineer, in order for a town hired surveyor to set reference points to reestablish the monument. Contractor must provide at least 10 days' notice to the Engineer of any monuments that will be disturbed. No monuments shall be removed without the prior agreement of the Engineer nor before the surveyor has set reference points to reestablish the monument. Monuments that will be disturbed must be removed during the removal of the existing pavement. After the pavement is reconstructed, disturbed monuments must be replaced in the same location using the same bronze plaque and cast iron frame and cover. After the pavement is reconstructed, for monuments that are protected in place, the monument cover must be adjusted so that there will not be any perceptible difference in elevation between the finished pavement surface and the cover. Monument Covers must be adjusted to grade per Marin Uniform Construction Standards, as shown on the plans and as directed by the Engineer.

525 San Anselmo Avenue
San Anselmo, CA 94960

Town of San Anselmo

Staff Report

TO: Town Council | 6/28/2022 | **Item #:** 1.4.

FROM:
Erica Freeman, Building Official

SUBJECT:
Adoption of an Ordinance Amending the San Anselmo Municipal Code adding Chapter 24 “All Electric Construction in Newly Constructed Residential Buildings” to Title 9 “Building Regulations”; and Amendment to Chapter 9-19 “Green Building Requirements” for consistency.

RECOMMENDATION
That the Town Council adopt the attached Ordinance Amending the San Anselmo Municipal Code adding Chapter 24 “All Electric Construction in Newly Constructed Residential Buildings” to Title 9 “Building Regulations”; and Amendment to Chapter 9-19 “Green Building Requirements” for consistency.

BACKGROUND
At the June 14, 2022, Town Council meeting, the Council introduced by title only and waived further reading of the attached Ordinance. A link to the video and materials from that meeting are available at <https://sananselmo-ca.legistar.com/Calendar.aspx>

DISCUSSION
The Ordinance Amendment requires that all new residential buildings must completely utilize electricity as a permanent source of power. No natural gas or propane infrastructure would be allowed in newly constructed residential buildings.

The State of California adopts new building standards every three years, codified in Title 24 of the California Code of Regulations known as the California Building Standards Code. (“California Building Code.” Municipalities adopt the California Building Code by reference into their own local codes. San Anselmo adopted its most recent update in November 2019, Title 9, Chapter 1 “Construction Codes”. The California Building Code and the Town Code currently contain energy-efficient requirements, such as “green” building requirements.

In addition, State law allows local jurisdictions to adopt more stringent local amendments to the building code if reasonably necessary because of local climatic, geological, or topographical conditions. (See i.e., Health & Saf. Code, § 17958.7.)

The California Building Code (as currently applied in the Town) does not dictate the type of energy to be used in new buildings. Rather, it provides prescriptive and performance based environmental requirements. The Climate Action Committee supported the Ordinance, which is intended to reduce the use of fossil fuels and promote cleaner electric power.

Fossil fuel usage, such as natural gas, has several drawbacks:

- The primary component in natural gas is methane, which is a pollutant that contributes to climate change. Climate change has contributed to extreme weather and hazard conditions including wildfires, drought, and flooding.
- Methane pollution can occur throughout a natural gas system including leaks within homes and buildings.
- Methane pollution may also occur when natural gas is burned in a building by appliances including cooking, space heating, and clothing washers and driers.
- Indoor natural gas use for cooking can pollute indoor air quality.
- A benefit to having natural gas connections is that it provides resiliency, especially during a Public Safety Power Shutoff.

In April 2020 the Town adopted new Reach Codes which allowed all construction to be mixed fuel, limited mixed fuel or all electric. Since the adoption of this ordinance staff does not believe anyone has gone all electric in homes but a number of Accessory Dwelling Units have.

Requiring that new residential buildings use electric power benefits the environment and promotes green electric energy. Approximately 50 California jurisdictions, including the Town of Fairfax and the City of Petaluma, have adopted ordinance amendments to require new construction to be all electric.

The Ordinance Amendment would apply to all new construction residential building permit applications submitted on or after the effective date of the new ordinance. It will require all newly constructed residential buildings to be constructed to use solely electric power. A “newly constructed building” is defined as a building that has “never been used or occupied for any purpose”, mirroring the definition used by many California jurisdictions with similar ordinances including the Town of Fairfax. Substantial remodels would not be subject to the ordinance; however, based on direction from the Council, staff will return with additional information when the Council considers adoption of the County’s Reach Codes later this year.

The Ordinance Amendment contains narrow exemptions. First, under the public interest exemption, the Town may allow the installation of natural gas infrastructure in a newly constructed residential building if it determines that it is in the public interest. The Town may consider factors including, but not limited to, the availability of alternative technologies or systems that do not use natural gas, and the impact the decision may have on the public health, welfare, and safety. However, the building must include sufficient electrical infrastructure such as wiring and conduit to facilitate full electrification in the future. Additionally, the Town Building Official may grant an exemption if it determines that full electrification is physically infeasible under the circumstances. All exempt projects remain subject to other green building code requirements.

A survey link was sent out with the Town’s newsletter dated May 14, 2022 and closed on May 23, 2022. (Attachment 3). 96 people responded to the survey, which was attached to the June 14, 2022 staff report.

Finally, the attached Ordinance Amendment provides that the requirements shall constitute “objective standards” pursuant to SB 35 (Gov. Code § 65913.4), the Housing Accountability Act (Gov. Code § 65589.5) and SB9. By way of background, these State laws only allow a municipality to impose objective standards to certain

housing development projects.

FISCAL IMPACT
There is no significant financial impact associated with the Ordinance Amendment.

GENERAL PLAN CONSISTENCY
The proposed Ordinance Amendment is consistent with the General Plan.

CEQA AND CLIMATE ACTION PLAN CONSISTENCY
The proposed Ordinance Amendment is exempt from the California Environmental Quality Act ("CEQA") pursuant to CEQA Guidelines section 15378(b)(5) because it is not a "project' under CEQA; CEQA Guidelines section 15061(b)(3), the "common sense exemption", because the proposed Ordinance Amendment will not have a significant environmental effect; and CEQA Guidelines section 15307 and 15308 as an action taken by a regulatory agency to protect the environment.

The Town's long term climate action goal as set forth in the Climate Action Plan includes the electrification and the phase-out of fossil fuels by upgrading and replacing fossil fuel-based infrastructure throughout the transportation and building sectors with cleaner electric power. (Climate Action Plan, p. 8.) Additionally, Chapter 2 of the Climate Action Plan encourages the use of electric power in new construction. The proposed Ordinance Amendment is consistent with the Climate Action Plan because it reduces the use of non-renewable fossil fuels in newly constructed buildings and promotes environmentally cleaner electric power.

CONCLUSION
Staff recommends that the Town Council consider the adoption of the attached Ordinance Amendment.

ORDINANCE NO. _____

AN ORDINANCE OF THE TOWN COUNCIL OF THE TOWN OF SAN ANSELMO ADDING CHAPTER 24 "ALL ELECTRIC CONSTRUCTION IN NEWLY CONSTRUCTED RESIDENTIAL BUILDINGS" TO TITLE 9 "BUILDING REGULATIONS" AND AMENDING CHAPTER 9-19 "GREEN BUILDING REQUIREMENTS" FOR CONSISTENCY

WHEREAS, the Town's Climate Action Plan sets forth Town goals and policies to combat climate change, promote clean energy use, and protect the environment; and

WHEREAS, the Climate Action Plan's Framework for a Post-Carbon Community has the strategy to "upgrade and replace carbon-intensive, fossil fuel-based infrastructure and combustion power throughout the transportation and building sectors with clean electric power"; and

WHEREAS, natural gas contains methane, which significantly contributes to pollution and climate change; and

WHEREAS, methane pollution from natural gas occurs throughout the natural gas system including leaks within buildings, and from household appliances; and

WHEREAS, the use of natural gas, including building-related natural gas infrastructure, produces significant greenhouse gas emissions that contribute to climate change; and

WHEREAS, the Town Council desires to require that all newly constructed residential buildings, with certain limited exceptions, be constructed to use all-electric power and make a minor amendment to Town Code section 9-19 "Green Building Requirements" for consistency (the "Ordinance Amendment"); and

WHEREAS, the Town Council determines that the Ordinance Amendment is necessary to protect the health, safety, and welfare of its residents pursuant to the Town's Constitutional Police Power authority; and

WHEREAS, the Town Council also determines pursuant to Health and Safety Code sections 17958.5, 17958.7, and 18941.4, that the Ordinance Amendment is reasonably necessary because of local climatic, geological, or topographical conditions as set forth in the findings herein; and

WHEREAS, on June 14, 2022, the Town Council held a duly noticed public hearing to consider the Ordinance Amendment and following the hearing, voted 4-0 to introduce by title only and to waive further reading of the ordinance.

NOW, THEREFORE, THE TOWN COUNCIL OF THE TOWN OF SAN ANSELMO DOES ORDAIN AS FOLLOWS:

SECTION 1: Environmental Review. The Ordinance Amendment is exempt from the California Environmental Quality Act ("CEQA") pursuant to CEQA Guidelines section 15378(b)(5) because it is not a "project' under CEQA; CEQA Guidelines section 15061(b)(3), the "common sense exemption", because the proposed Ordinance Amendment will not have a significant environmental effect; and CEQA Guidelines section 15307 and 15308 as an action taken by a regulatory agency to protect the environment.

SECTION 2: The above recitals are true and correct and are incorporated as findings herein.

SECTION 3: Chapter 24 "All Electric Construction in Newly Constructed Residential Buildings" of Title 9 "Building Regulations" is hereby added as follows:

9-24.01 – Findings and Purpose.

The Town Council of the Town of San Anselmo expressly declares and finds that:

(a) A primary component in natural gas is methane, which is a pollutant that significantly contributes to climate change.
(b) The combustion of natural gas and leakage occurring during the procurement, transportation, storage, distribution, and usage of natural gas produces emissions of methane that contributes to climate change.
(c) The adoption of this San Anselmo Municipal Code Chapter 9-24 "All Electric Construction in Newly Constructed Residential Buildings", is reasonably necessary because of local climatic, geologic, and topographical conditions as set forth below:
    (1) Flooding Hazards. The Town of San Anselmo has historically been subject to damaging floods during significant rain events due to the flooding of the San Anselmo Creek. Many areas of San Anselmo are located within flood zones subject to a high risk of flooding as defined by the Federal Emergency Management Agency. Extreme weather and sudden large rain events fueled by climate change have caused flood events in San Anselmo to become more common. Requiring newly constructed buildings to utilize only electric power will reduce greenhouse gas emissions that contribute to climate change and flooding events.
    (2) Wildfire Hazards. The Town of San Anselmo is located near a wildland-urban interface area vulnerable to wildfires. The hilly topography of the Town combined with its narrow roads constrain the fire department's ability to respond to fires. The Town of San Anselmo is also subject to drought conditions that have increased wildfire risk. The climatic conditions of drought, combined with the geologic and topographical conditions of the Town, significantly increase the risk of a catastrophic wildfire. Reducing the use of combustible natural gas and associated infrastructure will reduce fire risks, and reduce greenhouse gas emissions that contribute to climate change.
    (3) Seismic Hazards. San Anselmo is located near several active seismic faults with the potential to cause damaging earthquakes. The San Andreas Fault runs north and south

in the Western side of Marin County approximately 9 miles from the Town, and several other faults are within 15 miles of the Town including the Hayward Fault, the Rodgers Creek Fault, and the San Andreas Fault. Earthquakes can damage natural gas infrastructure causing gas leaks and significant fire hazards. New building electrification requirements and the accompanying reduction in natural gas use are reasonably necessary to reduce the risk of gas leaks and fire caused by earthquakes.

9-24.02– Applicability.

(a) Unless exempt, the requirements of this chapter apply to all newly constructed residential buildings.
(b) This chapter shall in no way be constructed to amend Energy Code requirements under Title 24 of the California Code of Regulations Part 6 or part 1, nor as requiring the use or installation of any specific appliance of system.
(c) This chapter shall not apply to portable propane appliances as used for outdoor cooking and heating.

9-24-03 – Definitions. For the purposes of this chapter the following definitions apply:

(a) "All electric building" means a building that uses a permanent supply of electricity as the source of energy for space heating, water heating (including pools and spas), cooking appliances, clothing drying appliances, that has no natural gas or propane plumbing installed in the building.
(b) "Energy Code" means the California Energy Code as adopted in San Anselmo Municipal Code section 9-1.101.
(c) "Newly constructed residential building" means a residential building that has never been used or occupied for any purpose, and has not been granted and/or is not subject to a valid building permit that remains in effect.

9-24.04 – Requirement for All Electric Construction in Newly Constructed Residential Buildings. A newly constructed residential building must satisfy the definition of an all electric building.

9-24.05 – Exemptions. The following are exempt from the requirements of this chapter. If an exemption applies, the newly constructed building shall remain subject to other applicable Town building codes including Chapter 9-19 "Green Building Requirements".

(a) The Building Official may allow natural gas infrastructure in a newly constructed residential building if the applicant establishes the building is not able to achieve the performance compliance standard under the Energy Code using commercially available technology or there is not an all-electric prescriptive compliance pathway under the Energy Code.
(b) The Building Official may allow natural gas infrastructure in a newly constructed residential building if the applicant establishes that there is an equivalent greenhouse gas reduction to that of all-electric construction.
(c) For all exemptions hereunder, natural gas appliance locations must also be electrically pre-wired for future electric appliance installation as approved by the Building Official.

9-24-06 – Objective Standard. The requirements of this chapter shall be determined to constitute "objective standards" under current and future State housing laws including but not limited to Government Code sections 65913.4 (SB35), 65589.5 (the Housing Accountability Act) and 65852.21 (SB9).

SECTION 4: Chapter 19 "Green Building Requirements" of Title 9 "Building Regulations" is amended as follows. Deleted language in ~~strikeout~~, new language in underline, existing language unchanged.

9-19-030 – Applicability

The provisions of this chapter shall apply to all construction or development projects defined below as a "covered project." Notwithstanding anything to the contrary in this chapter, Chapter 9-24 "All Electric Construction in Newly Constructed Residential Buildings" shall apply to newly constructed buildings as defined in said chapter, unless exempt.

SECTION 5: Severability. The Town Council hereby declares every section, paragraph, sentence, clause, and phrase is severable. If any section, paragraph, sentence, clause or phrase of these ordinance amendments are for any reason found to be invalid or unconstitutional, such invalidity, or unconstitutionality shall not affect the validity or constitutionality of the remaining sections, paragraphs, sentences, clauses or phrases.

SECTION 6: Effective Date. This Ordinance Amendment shall go into effect thirty (30) days from its adoption and shall be posted or published as required by state law.

SECTION 7: Submission to California Building Standards Commission. The Ordinance Amendment shall be submitted to the California Building Standards Commission pursuant to State law.

INTRODUCED AT A PUBLIC HEARING DURING A REGULAR MEETING OF THE SAN ANSELMO TOWN COUNCIL ON JUNE 14, 2022, AND ADOPTED AT A REGULAR TOWN COUNCIL MEETING ON JUNE 28, 2022, BY THE FOLLOWING VOTE:

AYES:
NOES:
ABSTAIN:
ABSENT:
RECUSED:

APPROVED:_____
Alexis Fineman, Mayor

ATTEST:_____
Carla Kacmar, Town Clerk

525 San Anselmo Avenue
San Anselmo, CA 94960

Town of San Anselmo

Staff Report

TO: Town Council | 6/28/2022 | **Item #:** 1.5.

FROM:
Jeff Zuba, Finance & Administrative Services Director

SUBJECT:
Revenue and Expenditure Reports, May 2022

RECOMMENDATION

Approve the monthly year-to-date Revenue and Expenditure Reports and corresponding activity for the period ending through May 31, 2022.

BACKGROUND

Every reporting period end, the Town of San Anselmo presents to the Town Council its operations as shown on the Revenue and Expenditure reports for discussion and approval. The Revenue and Expenditure reports are year-to-date summaries of revenues and expenditures from the Town's financial system ('Tyler Incode') for both the current as well as the prior corresponding fiscal year. These reports include the General Fund's operations given most of the Town-level operational activities are processed through the General Fund either directly or indirectly. This approval is to be obtained once a month within the fiscal year.

ANALYSIS

The revenue and expenditure data through May 31, 2022, is a compilation of all operating activity that is year-to-date for the current and prior fiscal year. These reports are sourced directly from the Town's financial system, of which a corresponding analysis has been performed identifying the key trends the Town Council should take note about.

Revenues

Overall, through the May 2022 reporting period end, the Town's General Fund revenue has expanded its base relative to prior year by $1.19M. This is primarily from the increase in property taxes, sales taxes, and fines offset by Transfers In. All other activity is either flat year-over-year or nets correspondingly to an immaterial change-all of which are within management's expectations.

Category	MAY YTD FY22	MAY YTD FY21	$ Change	% Change
Property Tax	14,203,376.08	13,295,317.61	908,058.47	6.83%
Sales Tax	1,273,998.39	968,208.72	305,789.67	31.58%
Property Transfer Tax	122,440.00	97,866.00	24,574.00	25.11%
Franchise Taxes	670,932.64	666,098.47	4,834.17	0.73%
Licenses & Permits	1,100,117.53	1,129,453.92	(29,336.39)	-2.60%
Fines	69,747.80	42,816.32	26,931.48	62.90%
Cash & Investment Interest	11,197.42	11,186.30	11.12	0.10%
Intergovernmental	140,170.97	123,258.40	16,912.57	13.72%
Other Fees	260,145.80	264,797.29	(4,651.49)	-1.76%
Transfers In	290,168.60	352,907.87	(62,739.27)	-17.78%
Total	**18,142,295.23**	**16,951,910.90**	**1,190,384.33**	**7.02%**

As shown above, the Town's revenue base overall increased by $1.19M of which is driven by Property Taxes, Sales Tax, and Fines:

- Property Taxes increased by $0.908M compared to the prior period due to increased values on properties due to the active real estate market.
- Sales Taxes increased by $0.305M compared to the prior period is a result of improving economic conditions from the COVID-19 Pandemic conditions within the Town's boundaries. With greater confidence in security and safety of public health, consumer sentiment is rising giving way to increased sales transactions.
- Fines increased by $0.027M compared to the prior period as enforcement returns to normal following relaxed protocols during the heigh of the pandemic.

The largest decrease to ($0.062M) transfers into the General Fund. Due to the Covid-19 pandemic $0.060M was returned in FY20 to the General Fund from the Robson House Fund as the project for dry rot repair and exterior painting was put on hold. As far as the other revenue streams, these changes either decreased or remained relatively flat year-over-year resulting in an immaterial change.

Expenditures

Overall, through the May 2022 reporting period end, the Town's General Fund expenditures have increased compared to the prior year by $0.865M. This is primarily from increases in compensation, CalPERS retirement payments, Outside Services, and other expenditures. All other activity is either flat year-over-year or nets correspondingly to an immaterial change-all of which are within management's expectations.

Category	MAY YTD FY22	MAY YTD FY21	$ Change	% Change
Compensation	2,933,359.64	2,683,417.72	249,941.92	9.31%
Retirement	863,162.98	762,566.97	100,596.01	13.19%
Training	28,103.67	8,921.47	19,182.20	215.01%
Outside Services	10,209,956.10	9,704,286.11	505,669.99	5.21%
Maintenance	135,062.71	116,652.14	18,410.57	15.78%
Utilities	188,663.10	198,642.61	(9,979.51)	-5.02%
Supplies	109,432.54	102,070.43	7,362.11	7.21%
Debt Service	117,132.54	116,857.77	274.77	0.24%
Other Expenditure	131,096.10	72,056.85	59,039.25	81.93%
Transfers Out	1,263,517.00	1,348,517.00	(85,000.00)	-6.30%
Total	**15,979,486.38**	**15,113,989.07**	**865,497.31**	**5.73%**

As shown above, the Town's expenditures base overall increased by $0.865M of which is driven by Compensation, CalPERS Retirement payments, Outside Services, and Transfers Out payments:

- Compensation (Salaries & Wages and Benefits) increased by $0.250M compared to the prior fiscal year primarily

due to the 5% maximum salary reduction put in place for the previous fiscal year. This salary reduction affected both SEIU and Unrepresented Town employees through the end of the 2021 fiscal year. In addition, the employee groups received cost of living adjustments on July 1, 2021, and January 1, 2022.

- Expenditures relating to CalPERS retirement increased by $0.098M due to the Town's required unfunded pension liability payment. The required retirement payment to CalPERS is a combination of both the contribution for the active and retired employees. This payment increased by $80,985 as compared to the previous fiscal year.
- Outside Services decreased by $0.505M compared to the previous fiscal year due to the changes in payments for Public Safety JPA's and construction project activity.
- Transfers to other funds decreased by $0.085M due to mid-year budget transfers in the previous fiscal year for project activity.

As far as the other expenditure streams, these changes either slightly changed or remained flat year-over-year resulting in an immaterial change. All other changes are taken together overall immaterial for further discussion and are expected given the Town's operations.

CONCLUSION

As inspected, the Town's financial position is continuously improving compared to the prior fiscal year given the economic recovery from the COVID-19 Pandemic. In anticipation through the end of the current fiscal year, these trends are expected to continue with increased revenue collection from this positive economic traction.

Attachment #1: Revenue and Expenditure Report by subcategory, May 2022

Attachment #2: Expenditure Report by department, May 2022

Town of San Anselmo
2021-2022 Rev & Exp Report
as of 05/31/2022
Fund: 01 - GENERAL FUND

	2020-2021 Revised Budget	2020-2021 Audited Actuals	2020-2021 YTD Actuals	% of Audited Actuals	2021-2022 Adopted Budget	2021-2022 Revised Budget	2021-2022 YTD Actuals	% of Actual / Budget
Revenue								
400 - PROPERTY TAX GENERAL	7,953,590.00	8,128,724.86	7,738,375.83	95.20 %	8,376,892.00	8,376,892.00	8,218,631.36	98.11 %
401 - PENSION	2,039,162.00	2,490,632.38	2,385,762.37	95.79 %	2,291,981.00	2,291,981.00	2,575,796.56	112.38 %
402 - PROPERTY TAX OTHER	2,717,576.00	3,376,535.46	3,171,179.41	93.92 %	3,265,116.00	3,265,116.00	3,408,948.16	104.41 %
410 - OTHER TAXES	1,218,100.00	1,456,718.47	1,066,094.72	73.18 %	1,324,486.00	1,440,000.00	1,396,438.39	96.97 %
411 - FRANCHISE TAXES	745,630.00	807,418.78	666,098.47	82.50 %	750,630.00	750,630.00	670,932.64	89.38 %
420 - BUSINESS LICENSE	180,000.00	292,105.63	269,535.88	92.27 %	240,000.00	240,000.00	274,064.06	114.19 %
421 - PARKING	5,500.00	11,264.58	8,582.97	76.19 %	24,500.00	24,500.00	9,055.78	36.96 %
422 - CONSTRUCTION	809,000.00	1,006,976.29	851,335.07	84.54 %	900,000.00	980,000.00	816,997.69	83.37 %
430 - VEHICLE CODE	10,000.00	18,042.79	10,626.96	58.90 %	10,000.00	17,500.00	19,126.74	109.30 %
431 - LIBRARY	200.00	1,205.41	168.17	13.95 %	0.00	0.00	1,074.78	0.00 %
432 - PARKING	27,000.00	42,314.81	32,021.19	75.67 %	50,000.00	65,000.00	49,546.28	76.23 %
440 - USE OF MONEY AND PROPERTY	10,000.00	76,486.94	11,186.30	14.63 %	15,000.00	15,000.00	11,197.42	74.65 %
450 - STATE REVENUE	144,800.00	152,155.19	123,258.40	81.01 %	107,500.00	107,500.00	140,170.97	130.39 %
460 - FEDERAL REVENUE	0.00	0.00	0.00	0.00 %	0.00	0.00	0.00	0.00 %
470 - LOCAL AGENCY REVENUE	0.00	0.00	0.00	0.00 %	0.00	0.00	0.00	0.00 %
480 - FEES FOR SERVICES	172,000.00	221,754.24	208,963.71	94.23 %	171,000.00	171,000.00	169,557.22	99.16 %
490 - MISCELLANEOUS REVENUE	90,900.00	78,215.46	55,833.58	71.38 %	97,500.00	97,500.00	90,588.58	92.91 %
519 - TRANSFERS IN	447,087.00	420,968.92	352,907.87	83.83 %	418,464.00	418,464.00	290,168.60	69.34 %
520 - SOURCE OF PROCEEDS	0.00	0.00	0.00	0.00 %	0.00	0.00	0.00	0.00 %
Total Revenue:	**16,570,545.00**	**18,581,520.21**	**16,951,930.90**	**91.23 %**	**18,043,069.00**	**18,261,083.00**	**18,142,295.23**	**99.35 %**
Expense								
600 - SALARIES AND WAGES	2,471,371.00	2,245,428.15	2,067,182.66	92.06 %	2,887,665.00	2,887,665.00	2,296,174.47	79.52 %
601 - RETIREMENT	830,820.00	779,893.84	762,566.97	97.78 %	960,932.00	960,932.00	863,162.98	89.83 %
602 - EMPLOYEE BENEFITS	671,150.00	555,400.10	540,860.06	97.38 %	782,423.50	782,423.50	562,859.84	71.94 %
604 - RETIREE BENEFITS	139,622.00	139,622.00	75,375.00	53.99 %	144,322.00	144,322.00	74,325.33	51.50 %
610 - TRAINING	32,200.00	10,659.57	8,921.47	83.69 %	40,200.00	40,200.00	28,103.67	69.91 %
611 - OUTSIDE SERVICES	10,380,759.00	10,826,200.51	9,704,286.11	89.64 %	11,039,241.00	11,269,241.00	10,209,956.10	90.60 %
613 - PUBLICATION / DUES	15,550.00	9,366.97	9,261.35	98.87 %	15,550.00	15,550.00	19,356.58	124.48 %
614 - MAINTENANCE	21,600.00	13,933.03	10,702.72	76.82 %	21,600.00	21,600.00	13,400.34	62.04 %
615 - BUILDING MAINTENANCE	128,950.00	154,733.30	105,949.42	68.47 %	189,950.00	189,950.00	119,289.00	62.80 %
616 - VEHICLE MAINTENANCE	6,500.00	2,425.66	0.00	0.00 %	6,500.00	6,500.00	2,373.37	36.51 %
617 - UTILITIES	221,740.00	252,211.91	198,642.61	78.76 %	210,740.00	210,740.00	188,663.10	89.52 %
618 - HIRING	0.00	2,357.11	1,142.11	48.45 %	1,000.00	1,000.00	27,472.86	2,747.29 %
619 - MISCELLANEOUS	19,000.00	-231.12	-380.00	164.42 %	18,500.00	18,500.00	11,170.00	60.38 %
620 - OFFICE SUPPLIES	34,800.00	20,755.39	18,248.53	87.92 %	36,200.00	36,200.00	17,791.44	49.15 %
622 - DEPARTMENT SUPPLIES	45,200.00	86,129.01	72,960.75	84.71 %	45,700.00	45,700.00	75,772.28	165.80 %
623 - BOOKS / MAGAZINES / VIDEOS	23,373.00	6,848.11	10,861.15	158.60 %	23,373.00	23,373.00	15,868.82	67.89 %
629 - MISCELLANEOUS	77,000.00	72,018.87	62,033.39	86.13 %	76,500.00	76,500.00	73,096.66	95.55 %
630 - EQUIPMENT	0.00	0.00	0.00	0.00 %	500.00	500.00	0.00	0.00 %
631 - CAPITAL OUTLAY - CONSTRUCTION	0.00	0.00	0.00	0.00 %	0.00	0.00	0.00	0.00 %
640 - PRINCIPAL	211,000.00	211,000.00	106,000.00	50.24 %	227,000.00	227,000.00	113,000.00	49.78 %
641 - INTEREST	19,018.00	16,901.83	10,857.77	64.24 %	11,208.00	11,208.00	4,132.54	36.87 %
670 - TRANSFERS OUT	1,348,517.00	1,348,517.00	1,348,517.00	100.00 %	1,263,517.00	1,263,517.00	1,263,517.00	100.00 %
Total Expense:	**16,698,170.00**	**16,754,171.24**	**15,113,989.07**	**90.21 %**	**18,002,621.50**	**18,232,621.50**	**15,979,486.38**	**87.64 %**
Total Fund: 01 - GENERAL FUND:	**-127,625.00**	**1,827,348.97**	**1,837,941.83**		**40,447.50**	**28,461.50**	**2,162,808.85**	
Report Total:	**-127,625.00**	**1,827,348.97**	**1,837,941.83**		**40,447.50**	**28,461.50**	**2,162,808.85**	

Town of San Anselmo
2021-2022 Rev & Exp Report
as of 05/31/2022
Fund: 01 - GENERAL FUND

	2020-2021 Revised Budget	2020-2021 Audited Actuals	2020-2021 YTD Actuals	% of Audited Actuals	2021-2022 Adopted Budget	2021-2022 Revised Budget	2021-2022 YTD Actuals	% of Actual / Budget
Expense								
00 - UNDESIGNATED	1,348,517.00	1,348,517.00	1,348,517.00	100.00 %	1,263,517.00	1,263,517.00	1,263,517.00	100.00 %
11 - TOWN COUNCIL	95,323.00	36,904.54	35,134.63	95.20 %	95,323.00	95,323.00	28,286.00	29.67 %
12 - ADMINISTRATION	1,196,257.00	1,082,515.02	977,046.43	90.26 %	1,403,741.50	1,423,741.50	1,081,856.49	75.99 %
16 - LEGAL SERVICES	205,000.00	315,276.23	249,891.83	79.26 %	300,000.00	300,000.00	287,826.06	95.94 %
18 - PLANNING	407,296.00	356,215.18	325,084.81	91.26 %	638,270.00	638,270.00	298,117.07	46.71 %
21 - NON-DEPARTMENTAL	1,056,651.00	967,944.26	894,556.02	92.42 %	1,159,369.00	1,159,369.00	980,609.59	84.58 %
30 - POLICE	4,540,998.00	4,546,888.17	4,170,233.76	91.72 %	4,685,857.00	4,685,857.00	4,315,019.56	92.09 %
32 - ROSS VALLEY FIRE SERVICE	4,391,395.00	4,382,001.59	3,994,737.12	91.16 %	4,611,448.00	4,611,448.00	4,153,323.38	90.07 %
40 - DEBT SERVICE	226,518.00	226,417.85	115,373.79	50.96 %	234,708.00	234,708.00	118,532.54	50.50 %
41 - ENGINEERING AND INSPECTION	1,167,307.00	1,283,354.81	1,073,565.19	83.65 %	1,326,648.00	1,406,648.00	1,322,798.49	94.04 %
42 - STREETS	835,488.00	900,353.28	762,301.26	84.67 %	890,957.50	920,957.50	878,523.04	95.39 %
71 - LIBRARY	613,159.00	561,399.53	528,288.47	94.10 %	729,255.50	729,255.50	568,933.55	78.02 %
81 - PARKS	361,249.00	505,007.96	417,068.54	82.59 %	382,079.50	482,079.50	448,647.11	93.06 %
82 - RECREATION/GENERAL FUND	253,012.00	241,375.82	222,190.22	92.05 %	281,447.50	281,447.50	233,496.50	82.96 %
Total Expense:	**16,698,170.00**	**16,754,171.24**	**15,113,989.07**	**90.21 %**	**18,002,621.50**	**18,232,621.50**	**15,979,486.38**	**87.64 %**
Total Fund: 01 - GENERAL FUND:	**16,698,170.00**	**16,754,171.24**	**15,113,989.07**	**90.21 %**	**18,002,621.50**	**18,232,621.50**	**15,979,486.38**	**87.64 %**
Report Total:	**16,698,170.00**	**16,754,171.24**	**15,113,989.07**	**90.21 %**	**18,002,621.50**	**18,232,621.50**	**15,979,486.38**	**87.64 %**

ITEM 1.5 - ATTACHMENT 2

Town of San Anselmo

Staff Report

525 San Anselmo Avenue
San Anselmo, CA 94960

TO: Town Council | 6/28/2022 | **Item #:** 1.6.

FROM:
Dannielle Mauk, Director of Community Services

SUBJECT:
May Financial Report on Recreation Fund

RECOMMENDATION

That the Council approve the Recreation Fund Revenue and Expenditure Report for the period ending May 31, 2022.

BACKGROUND

The Recreation Department offers a wide variety of fee-based programs throughout the fiscal year including sports programs and leagues, youth and adult classes, childcare and camps. Additional revenue is generated through facility rentals and administrative fees.

DISCUSSION

As of May 31, 2022, 92% of the fiscal year has elapsed and the Recreation Fund is listed at 159% of projected revenues and 98% of projected expenditures.

Enrollment for recreation programs is much higher than expected for FY 2021-22. As a result, the expenditures will also be higher. The budget was drafted with numbers based on County Public Health orders for COVID 19. As the orders have changed, the department has been able to serve more members of the community.

It is also important to note that the current budget has a $158,744 deficit which is reflected in the difference between the revenue budgeted at $1,348,625 and the budget expenditures of $1,507,369.

All the revenue that is collected for summer programs occurring after July 1, 2022, will be deferred to FY 2022-23. Summer registration began in March.

The State and County Public Health Orders for COVID-19 are designed to ensure and protect the health of our residents. The orders change the Recreation Department's ability to offer services, programs, and rentals. The Department continues to follow all guidance.

For historical comparison purposes, staff has developed the following table.

FY		Revenue				Expenditures				Rev Over/(Under) Exp	
		Budget	Actual	%		Budge	Actual	%		$$	%
2021-22		1,348,62	2,142,1	159%		1,507,	1,482	98%		659.349	49%

2020-21		1,408,12	1,317,9	94%		1,550,	1,091	70%		226,007	16%
2019-20		1,627,26	1,454,7	90%		1,676,	1,405	84%		49,249	3%
2018-19		1,510,60	1,867,3	124%		1,591,	1,322	83%		545,099	36%
2017-18		1,514,00	1,679,9	111%		1,644,	1,265	77%		414,614	27%
2016-17		1,384,32	1,628,4	118%		1,500,	1,253	84%		374,795	27%
2015-16		1,246,68	1,504,6	121%		1,356.	1,264	93%		239,986	19.2%
2014-15		1,163,48	1,328,1	114%		1,223,	1,099	90%		229,150	19.6%

Town of San Anselmo

Budget Report

Group Summary

For Fiscal: 2021-2022 Period Ending: 05/31/2022

SubCategor...	Original Total Budget	Current Total Budget	Period Activity	Fiscal Activity	Variance Favorable (Unfavorable)	Percent Used
Department: 00 - UNDESIGNATED						
490 - MISCELLANEOUS REVENUE	0.00	0.00	0.00	100.00	100.00	0.00 %
670 - TRANSFERS OUT	80,694.00	80,694.00	0.00	80,694.00	0.00	100.00 %
Department: 00 - UNDESIGNATED Surplus (Deficit):	**-80,694.00**	**-80,694.00**	**0.00**	**-80,594.00**	**100.00**	**99.88 %**
Department: 61 - SPORTS						
480 - FEES FOR SERVICES	434,125.00	434,125.00	43,119.00	637,464.93	203,339.93	146.84 %
600 - SALARIES AND WAGES	36,000.00	36,000.00	280.00	33,097.50	2,902.50	91.94 %
602 - EMPLOYEE BENEFITS	2,754.00	2,754.00	21.42	2,532.03	221.97	91.94 %
611 - OUTSIDE SERVICES	91,250.00	91,250.00	28,722.65	140,385.40	-49,135.40	153.85 %
629 - MISCELLANEOUS	46,500.00	46,500.00	168.50	47,933.90	-1,433.90	103.08 %
Department: 61 - SPORTS Surplus (Deficit):	**257,621.00**	**257,621.00**	**13,926.43**	**413,516.10**	**155,895.10**	**160.51 %**
Department: 62 - CULTURE						
480 - FEES FOR SERVICES	93,000.00	93,000.00	2,166.50	150,322.72	57,322.72	161.64 %
611 - OUTSIDE SERVICES	51,190.00	51,190.00	17,229.10	99,865.67	-48,675.67	195.09 %
629 - MISCELLANEOUS	300.00	300.00	0.00	0.00	300.00	0.00 %
Department: 62 - CULTURE Surplus (Deficit):	**41,510.00**	**41,510.00**	**-15,062.60**	**50,457.05**	**8,947.05**	**121.55 %**
Department: 63 - CHILD CARE						
480 - FEES FOR SERVICES	787,000.00	787,000.00	84,237.50	1,323,488.97	536,488.97	168.17 %
600 - SALARIES AND WAGES	344,174.00	344,174.00	21,142.52	251,336.01	92,837.99	73.03 %
601 - RETIREMENT	27,011.00	27,011.00	1,112.34	15,538.88	11,472.12	57.53 %
602 - EMPLOYEE BENEFITS	88,412.00	88,412.00	4,278.32	60,332.38	28,079.62	68.24 %
611 - OUTSIDE SERVICES	176,683.00	176,683.00	695.44	204,452.68	-27,769.68	115.72 %
629 - MISCELLANEOUS	14,930.00	14,930.00	9,012.38	19,122.99	-4,192.99	128.08 %
Department: 63 - CHILD CARE Surplus (Deficit):	**135,790.00**	**135,790.00**	**47,996.50**	**772,706.03**	**636,916.03**	**569.04 %**
Department: 64 - EVENTS AND OTHER						
480 - FEES FOR SERVICES	11,000.00	11,000.00	2,105.00	21,271.00	10,271.00	193.37 %
611 - OUTSIDE SERVICES	2,000.00	2,000.00	492.68	563.86	1,436.14	28.19 %
Department: 64 - EVENTS AND OTHER Surplus (Deficit):	**9,000.00**	**9,000.00**	**1,612.32**	**20,707.14**	**11,707.14**	**230.08 %**
Department: 65 - PROGRAM ADMINISTRATION						
480 - FEES FOR SERVICES	23,500.00	23,500.00	1,930.00	9,456.00	-14,044.00	40.24 %
600 - SALARIES AND WAGES	245,310.00	245,310.00	24,772.72	247,059.70	-1,749.70	100.71 %
601 - RETIREMENT	23,390.00	23,390.00	2,205.26	22,258.67	1,131.33	95.16 %
602 - EMPLOYEE BENEFITS	51,655.00	51,655.00	5,805.02	55,227.74	-3,572.74	106.92 %
610 - TRAINING	3,000.00	3,000.00	0.00	1,226.71	1,773.29	40.89 %
611 - OUTSIDE SERVICES	124,500.00	171,866.00	9,529.64	164,677.42	7,188.58	95.82 %
613 - PUBLICATION / DUES	1,000.00	1,000.00	0.00	925.17	74.83	92.52 %
614 - MAINTENANCE	1,500.00	1,500.00	0.00	0.00	1,500.00	0.00 %
615 - BUILDING MAINTENANCE	1,500.00	1,500.00	0.00	212.99	1,287.01	14.20 %
617 - UTILITIES	15,000.00	15,000.00	1,346.54	14,653.34	346.66	97.69 %
618 - HIRING	0.00	0.00	0.00	3,312.47	-3,312.47	0.00 %
619 - MISCELLANEOUS	1,500.00	1,500.00	9.99	1,371.88	128.12	91.46 %
620 - OFFICE SUPPLIES	25,000.00	25,000.00	0.00	12,280.04	12,719.96	49.12 %
622 - DEPARTMENT SUPPLIES	4,250.00	4,250.00	336.40	3,693.21	556.79	86.90 %
629 - MISCELLANEOUS	500.00	500.00	0.00	0.00	500.00	0.00 %
Department: 65 - PROGRAM ADMINISTRATION Surplus (Deficit):	**-474,605.00**	**-521,971.00**	**-42,075.57**	**-517,443.34**	**4,527.66**	**99.13 %**
Report Surplus (Deficit):	**-111,378.00**	**-158,744.00**	**6,397.08**	**659,348.98**	**818,092.98**	**-415.35 %**

Item 1.6-Attachment 1

Town of San Anselmo

Budget Report

Group Summary

For Fiscal: 2021-2022 Period Ending: 05/31/2022

Account Typ...	Original Total Budget	Current Total Budget	Period Activity	Fiscal Activity	Variance Favorable (Unfavorable)	Percent Used
Fund: 21 - RECREATION						
Revenue	1,348,625.00	1,348,625.00	133,558.00	2,142,103.62	793,478.62	158.84 %
Expense	1,460,003.00	1,507,369.00	127,160.92	1,482,754.64	24,614.36	98.37 %
Fund: 21 - RECREATION Surplus (Deficit):	**-111,378.00**	**-158,744.00**	**6,397.08**	**659,348.98**	**818,092.98**	**-415.35 %**
Report Surplus (Deficit):	**-111,378.00**	**-158,744.00**	**6,397.08**	**659,348.98**	**818,092.98**	**-415.35 %**

Item 1.6-Attachment 1

525 San Anselmo Avenue
San Anselmo, CA 94960

Town of San Anselmo

Staff Report

TO: Town Council | 6/28/2022 | **Item #:** 1.7.

FROM:
Heidi Scoble, Planning Director

SUBJECT:
Confirm the Recommended Appointments to the Housing Element Advisory Committee

RECOMMENDATION

Confirm the recommended appointments to the Housing Element Advisory Committee

BACKGROUND AND DISCUSSION

The State of California requires that Housing Element is required to be updated every eight years and is the only element in the General Plan that is required to be reviewed and approved by the California Department of Housing and Community Development (HCD). In advance of the Housing Update process, every County/City/Town in California receives a target number of homes to plan for at various income levels. This is called the Regional Housing Needs Allocation (RHNA). RHNA starts with the Regional Housing Needs Determination (RHND) provided by HCD, which is the total number of housing units the San Francisco Bay Area needs over the eight- year period, by income group. The Association of Bay Area Governments (ABAG) developed the methodology to allocate a portion of housing needs to each city, town, and county in the region. The RHNA allocation for San Anselmo increased from 106 units in the 2015-2023 cycle to 833 units in the 2023 -2031 cycle.

To ensure a broad and include community outreach and engagement process, in addition to facilitating the Housing Element Update undertaking, the Town Council adopted Resolution 4434 to establish a Housing Element Advisory Committee (HEAC). The HEAC was established to be comprised of seven members (Mayor Fineman and Councilmember Burke), one Planning Commissioner, and four San Anselmo residents.

In anticipation of the establishment of the HEAC, the Town began advertising on the City's website for interested San Anselmo residents to apply. The application period ran from June 8 through June 18. The Town received 10 applications.

On Monday, June 20 and Tuesday, June 21, Mayor Fineman, Councilmember Burke, Town Manager Donery and Planning Director Scoble conducted nine interviews. At the conclusion of the interviews, it was determined that the following applicants should be confirmed as the appointments to the HEAC and would represent backgrounds which include finance and lending, leadership and meeting facilitation, architecture and construction management, and experience in working with diversity, equity, and inclusion:

- Richard Redmond
- Kathy Ogren
- Sandra Becker
- Robin Poppers

Although the four above are recommended to be appointed to the HEAC, it is worth noting that all of the applicants are extremely well qualified and the Town staff will encourage the applicants to stay involved in the Housing Element Update process as participants.

Lastly, at a Special Planning Commission meeting on June 23, the Planning Commission voted to appoint Planning Commissioner Chair Tom Tunny. Chair Tunny is an attorney with a focus on land use and planning law.

FISCAL IMPACT

Confirming the appointments of the members to the HEAC will not create any fiscal impact.

GENERAL PLAN CONSISTENCY

The Housing Element is required to be updated every eight years and is the only General Plan element which is required to be reviewed and approved by the State Department of Housing and Community Development (HCD). The purpose of the HEAC is to help facilitate the Housing Element Update process, therefore the appointments to the HEAC will be consistent with the intent of the General Plan.

CEQA AND CLIMATE ACTION PLAN CONSISTENCY

Appointments to serve on a committee is not a “project” under the California Environmental Quality Act because it does not involve an activity which has the potential to cause a direct or reasonably foreseeable physical change in the environment. (Cal. Pub. Res. Code Section 21065).

CONCLUSION

The San Anselmo Housing Element must be submitted to the State by January 2023. To help with the Housing Element Process and to populate the HEAC, staff respectfully requests the Town Council confirm the appointments of Richard Redmond, Kathy Ogren, Sandra Becker, Robin Poppers, and Planning Commissioner Jennifer Asselstine.

ATTACHMENT

1. Housing Element Advisory Committee Applicant Applications

#1

COMPLETE

Collector:	Web Link 1 (Web Link)
Started:	Wednesday, June 08, 2022 12:46:42 PM
Last Modified:	Wednesday, June 08, 2022 1:19:37 PM
Time Spent:	00:32:54
IP Address:	76.126.110.102

Page 1

Q1

General Information

Name	**Richard Redmond**
Address	**67 Olive Ave**
City/Town	**San Anselmo**
State/Province	**CA**
ZIP/Postal Code	**94960**
Email Address	**richard@richardredmond.com**
Phone Number	**4158608800**

Q2

Years residing in San Anselmo

1998-2010 2014-2022

Q3

Occupation

Real estate finance

Q4

References

Name/Phone	**Jeff Kroot 415-456-5531**
Name/Phone	**Matt Brown 415-308-1408**

Q5

Yes

Are you available to attend daytime meetings?

Q6

Are you available to attend evening meetings?

Yes

Q7

Days you are not available to attend daytime/nighttime meetings

Respondent skipped this question

Q8

Please indicate which segments of the community you would represent as a member of the HEAC

Renter,

Owner

Q9

Which answer best describes the type of housing you live in currently

Single Family (1 unit, or 1 unit plus an ADU)

Q10

Household Type (check all that apply)

Single without children,

Family with children

Q11

Age Group

Older Adult (65+)

Q12

Household (hh) Income Group (voluntary, not required - 1 or 2 adult earners)

Earning more than $120,200 for a 1-person hh, $137,350 for a 2-person hh

Q13

Briefly describe your educational, employment, and civic participation background

BA from Vanderbilt University, residential mortgage broker/banker in Marin for 30 years, currently working full-time independently. No recent civic participation. I have owned and lived with my family in two houses in San Anselmo over a period of 12 years, from 1998 to 2010. As a single person, I have rented a home here for the last 8 years.

Q14

Briefly describe your interest your interest in serving on the Housing Element Advisory Committee (HEAC)

I am applying for this position because it is an area both of interest and expertise, and because I do want to give back to the community. Both personally and professionally I have been avidly following the emergence of ADUs for over a decade. I raised three children in Marin, all of whom live here (two are homeowners), so I have also been keenly following the affordability debate, and all of the thorny issues involved. I would really like to be involved in finding ways to thread the needle of mitigating the housing shortage/affordability issues that we face without doing damage to the quality of life that brought us all here.

Q15

DECLARATIONS - Please acknowledge each item by checking the corresponding box

I am aware that the Housing Element Update process is up to a 1-year effort and I am prepared to make the commitment to serve on the HEAC for this time period. I understand my role on the HEAC and am prepared to serve accordingly.

,

I request that you consider my application to be a member of the San Anselmo Housing Element Advisory Committee (HEAC). I am prepared and will be able to devote the time necessary to perform the duties of this body. I am also aware that my application will be made public as an applicant for this body and that this application will be held on file for subsequent vacancies.

Q16

By entering your name below, you acknowledge that that you have completed this application for yourself and no one else.

Richard Redmond

#2

COMPLETE

Collector:	Web Link 1 (Web Link)
Started:	Thursday, June 09, 2022 1:18:36 PM
Last Modified:	Thursday, June 09, 2022 2:15:45 PM
Time Spent:	00:57:08
IP Address:	73.170.47.45

Page 1

Q1

General Information

Name	**Robin Poppers**
Address	**52 Grove Lane**
City/Town	**San Anselmo**
State/Province	**CA**
ZIP/Postal Code	**94960**
Email Address	**poppers.robin@gmail.com**
Phone Number	**415 637 8646**

Q2

Years residing in San Anselmo

48

Q3

Occupation

Architect (retired)

Q4

References

Name/Phone	**John Frando, HKIT Architects (510) 625-9800**
Name/Phone	**Diana Ariza-Klose, HKIT Architects (510) 625-9800**

Q5

Are you available to attend daytime meetings?

Yes

Q6

Are you available to attend evening meetings?

Yes

Q7

Days you are not available to attend daytime/nighttime meetings

Respondent skipped this question

Q8

Please indicate which segments of the community you would represent as a member of the HEAC

Owner

Q9

Which answer best describes the type of housing you live in currently

Single Family (1 unit, or 1 unit plus an ADU)

Q10

Household Type (check all that apply)

Senior not living in Senior Housing

Q11

Age Group

Older Adult (65+)

Q12

Household (hh) Income Group (voluntary, not required - 1 or 2 adult earners)

Earning between $60,900 and $120,200 annually for 1-person hh, $69,600-$137,350 for a 2-person hh

Q13

Briefly describe your educational, employment, and civic participation background

Licensed Architect, B. Arch from UCB, practicing residential design since 1971. Most recent 18 years in construction administration with HKIT Architects. Participation in affordable multi-family and senior housing projects - including Alma Via in San Rafael - and non-profit sponsored housing for the formerly homeless. Assignments included meeting with Owners, Sponsors, Agencies and Contractors.

Q14

Briefly describe your interest your interest in serving on the Housing Element Advisory Committee (HEAC)

San Anselmo is such an attractive town for many people. Finding appropriate ways to integrate a diverse population into a community that is historically developed is a fascinating challenge. The existing physical environment will impact social and economic goals. I believe I can bring hands-on experience in that aspect of the Committee's work.

Q15

DECLARATIONS - Please acknowledge each item by checking the corresponding box

I am aware that the Housing Element Update process is up to a 1-year effort and I am prepared to make the commitment to serve on the HEAC for this time period. I understand my role on the HEAC and am prepared to serve accordingly.

,

I request that you consider my application to be a member of the San Anselmo Housing Element Advisory Committee (HEAC). I am prepared and will be able to devote the time necessary to perform the duties of this body. I am also aware that my application will be made public as an applicant for this body and that this application will be held on file for subsequent vacancies.

Q16

By entering your name below, you acknowledge that that you have completed this application for yourself and no one else.

Robin Poppers

#3

COMPLETE

Collector:	Web Link 1 (Web Link)
Started:	Thursday, June 09, 2022 10:05:36 PM
Last Modified:	Thursday, June 09, 2022 10:48:33 PM
Time Spent:	00:42:57
IP Address:	157.131.220.246

Page 1

Q1

General Information

Name	**Andrew McCune**
Address	**49 Sunnyside Avenue**
City/Town	**San Anselmo**
State/Province	**CA**
ZIP/Postal Code	**94960**
Email Address	**andrew@andrewmccune.com**
Phone Number	**(206)850-8500**

Q2

Years residing in San Anselmo

0.5

Q3

Occupation

Architect

Q4

References

Name/Phone	**Faten Abdullah/(916) 235-0564**
Name/Phone	**TJ Foster/ (808) 298-2107**

Q5

Are you available to attend daytime meetings?

No

Q6

Are you available to attend evening meetings?

Yes

Q7

Days you are not available to attend daytime/nighttime meetings

Respondent skipped this question

Q8

Please indicate which segments of the community you would represent as a member of the HEAC

Renter,

Owner,

Experiencing Homelessness

Q9

Which answer best describes the type of housing you live in currently

Single Family (1 unit, or 1 unit plus an ADU)

Q10

Household Type (check all that apply)

Family with children

Q11

Age Group

Adult

Q12

Household (hh) Income Group (voluntary, not required - 1 or 2 adult earners)

Earning more than $120,200 for a 1-person hh, $137,350 for a 2-person hh

Q13

Briefly describe your educational, employment, and civic participation background

I have previously taught architectural studio and architectural/art history at the college level. I have been employed in the field of architecture since 1995. I received an A.B. in Architecture and an M.Arch in Architecture. I would like to contribute to and serve the community with my knowledge and talents.

Q14

Briefly describe your interest your interest in serving on the Housing Element Advisory Committee (HEAC)

I strongly believe that healthy communities provide a range of housing types of quality for a broad range of socio-economic cohorts. Meeting this challenge is only limited by the creativity of those involved.

Q15

DECLARATIONS - Please acknowledge each item by checking the corresponding box

I am aware that the Housing Element Update process is up to a 1-year effort and I am prepared to make the commitment to serve on the HEAC for this time period. I understand my role on the HEAC and am prepared to serve accordingly.

,

I request that you consider my application to be a member of the San Anselmo Housing Element Advisory Committee (HEAC). I am prepared and will be able to devote the time necessary to perform the duties of this body. I am also aware that my application will be made public as an applicant for this body and that this application will be held on file for subsequent vacancies.

Q16

By entering your name below, you acknowledge that that you have completed this application for yourself and no one else.

Andrew McCune

#4

COMPLETE

Collector:	Web Link 1 (Web Link)
Started:	Friday, June 10, 2022 6:21:02 AM
Last Modified:	Friday, June 10, 2022 7:09:02 AM
Time Spent:	00:48:00
IP Address:	98.51.6.223

Page 1

Q1

General Information

Name	**Sandra Becker**
Address	**287 Butterfield Road**
City/Town	**San Anselmo**
State/Province	**CA**
ZIP/Postal Code	**94960**
Email Address	**slmbecker@comcast.net**
Phone Number	**4153101880**

Q2

Years residing in San Anselmo

11

Q3

Occupation

Nonprofit Consultant

Q4

References

Name/Phone	**Bruce Friedricks, 510.612.0420**
Name/Phone	**Susan Clark, 415.902.6592**

Q5

Yes

Are you available to attend daytime meetings?

Q6

Are you available to attend evening meetings?

Yes

Q7

Days you are not available to attend daytime/nighttime meetings

Mondays,

Tuesdays,

Wednesdays,

Thursdays,

Fridays

Q8

Please indicate which segments of the community you would represent as a member of the HEAC

Renter

Q9

Which answer best describes the type of housing you live in currently

Single Family (1 unit, or 1 unit plus an ADU)

Q10

Household Type (check all that apply)

Single without children

Q11

Age Group

Adult

Q12

Household (hh) Income Group (voluntary, not required - 1 or 2 adult earners)

Earning more than $120,200 for a 1-person hh, $137,350 for a 2-person hh

Q13

Briefly describe your educational, employment, and civic participation background

I graduated from San Francisco State University with a BS in Business Administration. I am a former CPA, with 5 years at Ernst & Young. I owned and managed a document management company, Fort Docs, for 5 years. I have 20+ years of experience working with Non Profit organizations as Controller, Director of Finance, and CFO. I am the founder and principal consultant at Cycle Advisors, providing interim and fractional CFO service to Nonprofit organizations for the past 3 years. I am a former trustee of HeadsUp, the foundation supporting San Rafael Public Schools. I have been the treasurer at Leadership Public Schools in Oakland for four years, term ending in June 2022. I volunteered in the local public schools when my children were student, from 2000 - 2013. I served worked with MCBC to launch the Safe Routes to Schools program at Sun Valley Elementary School.

Q14

Briefly describe your interest your interest in serving on the Housing Element Advisory Committee (HEAC)

I have lived in Central Marin for over 30 years, the last 11 in San Anselmo. During this time, the demand for housing to accommodate working and middle class families has out paced supply. The state of California has passed legislation requiring all municipalities to develop plans to expand the number of housing units. I look forward to collaborating with others in the community to develop recommendations that support housing development to meet the increased demand.

Q15

DECLARATIONS - Please acknowledge each item by checking the corresponding box

I am aware that the Housing Element Update process is up to a 1-year effort and I am prepared to make the commitment to serve on the HEAC for this time period. I understand my role on the HEAC and am prepared to serve accordingly.

,

I request that you consider my application to be a member of the San Anselmo Housing Element Advisory Committee (HEAC). I am prepared and will be able to devote the time necessary to perform the duties of this body. I am also aware that my application will be made public as an applicant for this body and that this application will be held on file for subsequent vacancies.

Q16

By entering your name below, you acknowledge that that you have completed this application for yourself and no one else.

Sandra Becker

#5

COMPLETE

Collector:	Web Link 1 (Web Link)
Started:	Friday, June 10, 2022 9:40:54 AM
Last Modified:	Friday, June 10, 2022 9:51:53 AM
Time Spent:	00:10:59
IP Address:	76.126.108.26

Page 1

Q1

General Information

Name	**Cecily Wilson**
Address	**8 Crescent Lane**
City/Town	**San Anselmo**
State/Province	**California**
ZIP/Postal Code	**94960**
Email Address	**cecilytwilson@gmail.com**
Phone Number	**415-706-7842**

Q2

Years residing in San Anselmo

29

Q3

Occupation

Self-employed business services

Q4

References

Name/Phone	**Alexis Fineman/**

Q5

Are you available to attend daytime meetings?

Yes

Q6

Are you available to attend evening meetings?

Yes

Q7

Days you are not available to attend daytime/nighttime meetings

Respondent skipped this question

Q8

Please indicate which segments of the community you would represent as a member of the HEAC

Owner

Q9

Which answer best describes the type of housing you live in currently

Single Family (1 unit, or 1 unit plus an ADU)

Q10

Household Type (check all that apply)

Family with children

Q11

Age Group

Adult

Q12

Household (hh) Income Group (voluntary, not required - 1 or 2 adult earners)

Earning between $60,900 and $120,200 annually for 1-person hh, $69,600-$137,350 for a 2-person hh

Q13

Briefly describe your educational, employment, and civic participation background

Attended Archie Williams HS, earned a BA in Philosophy from SFSU. Civic participation has been mostly in the form of peaceful protest, and attending town meetings to speak on subject which interest me.

Q14

Briefly describe your interest your interest in serving on the Housing Element Advisory Committee (HEAC)

I am interested in working to develop more affordable housing in San Anselmo so that the population of the town becomes more diverse and energized. I'd love for the town to become a model of imagination and creativity when it comes to how we deal with affordable housing.

Q15

DECLARATIONS - Please acknowledge each item by checking the corresponding box

I am aware that the Housing Element Update process is up to a 1-year effort and I am prepared to make the commitment to serve on the HEAC for this time period. I understand my role on the HEAC and am prepared to serve accordingly.

,

I request that you consider my application to be a member of the San Anselmo Housing Element Advisory Committee (HEAC). I am prepared and will be able to devote the time necessary to perform the duties of this body. I am also aware that my application will be made public as an applicant for this body and that this application will be held on file for subsequent vacancies.

Q16

By entering your name below, you acknowledge that that you have completed this application for yourself and no one else.

Cecily Wilson

#6

COMPLETE

Collector: Web Link 1 (Web Link)
Started: Saturday, June 11, 2022 10:37:56 AM
Last Modified: Saturday, June 11, 2022 3:56:39 PM
Time Spent: 05:18:42
IP Address: 23.127.167.71

Page 1

Q1

General Information

Name	**Stephanie Schrandt Boone**
Address	**226 Van Tassel Ct.**
City/Town	**San Anselmo**
State/Province	**CA**
ZIP/Postal Code	**94960**
Email Address	**sasboone@me.com**
Phone Number	**415 235 7746**

Q2

Years residing in San Anselmo

16

Q3

Occupation

Lawyer, Insurance Executive

Q4

References

Name/Phone	**Stephanie Hellman/+1 (415) 250-5129**
Name/Phone	**Stephanie Goldsborough/+1 (415) 261-8078**

Q5

Yes

Are you available to attend daytime meetings?

Q6 Are you available to attend evening meetings?	**Yes**
Q7 Days you are not available to attend daytime/nighttime meetings	**Respondent skipped this question**
Q8 Please indicate which segments of the community you would represent as a member of the HEAC	**Owner**
Q9 Which answer best describes the type of housing you live in currently	**Single Family (1 unit, or 1 unit plus an ADU)**
Q10 Household Type (check all that apply)	**Family with children**
Q11 Age Group	**Adult**
Q12 Household (hh) Income Group (voluntary, not required - 1 or 2 adult earners)	**Earning more than $120,200 for a 1-person hh, $137,350 for a 2-person hh**

Q13

Briefly describe your educational, employment, and civic participation background

- Bachelor of Science, Journalism + Juris Doctor.
- 9 years in private practice of law — predominantly civil litigation (licensed in CA and FL)
- 16 years Corporate experience in Reinsurance/Insurance executive positions.
- Recently resigned from Chief Claims Officer position at Swiss Re Corporate Solutions (was head of North America Claims), and with more free time - I am now looking to expand my involvement in local civic and philanthropic endeavors.
- In my career I have been heavily involved in diversity, equity & inclusion initiatives — most recently serving as Executive Sponsor for Swiss Re's Together with Pride (LGBTQ) Employee Resource Group
- We are a diverse family (multi-racial and LGBT), so we represent a perspective that is relatively unique in San Anselmo & Marin County at large.
- I have been active in national politics, working as a volunteer for the Obama, (Hillary) Clinton & Biden presidential campaigns.
- Our two children (ages 15 & 16) have lived their whole lives in San Anselmo, so we have broad familiarity & experience with Rec Sports, public & private schools (Brookside, St. Anselm, Marin Catholic & Archie Williams), local businesses, etc. - but I have not been directly involved in local politics, so I start with a super clean slate.

Q14

Briefly describe your interest your interest in serving on the Housing Element Advisory Committee (HEAC)

I am passionate about equity in all of its dimensions, but especially equitable use of land and public resources. The daughter of a City Engineer, I have always had a keen interest in urban planning and development that started with my law school elective courses in Zoning and Real Property.

I have followed with great interest the challenges the pandemic has highlighted & exacerbated in respect of the growing socioeconomic divide. What seems to be standing in the way of solutions to challenges like affordable housing — particularly given our current political climate — is the right mix of creativity, pragmatism and empathy.

With my legal and regulatory background, and my 16+ years of lived experience in our town, I feel uniquely qualified to bring focused, objective, problem-solving skills to contribute to the evolution of our Housing Element and General Plan. San Anselmo is a town of great promise & I would be grateful for the opportunity to contribute & serve to insure that the San Anselmo Housing Element Update achieves our broadest community objectives for equitable land use, transportation, conservation, noise, open space, safety, and housing.

Thank you for your consideration.

Q15

DECLARATIONS - Please acknowledge each item by checking the corresponding box

I am aware that the Housing Element Update process is up to a 1-year effort and I am prepared to make the commitment to serve on the HEAC for this time period. I understand my role on the HEAC and am prepared to serve accordingly.

,

I request that you consider my application to be a member of the San Anselmo Housing Element Advisory Committee (HEAC). I am prepared and will be able to devote the time necessary to perform the duties of this body. I am also aware that my application will be made public as an applicant for this body and that this application will be held on file for subsequent vacancies.

Q16

By entering your name below, you acknowledge that that you have completed this application for yourself and no one else.

Stephanie Schrandt Boone

#7

COMPLETE

Collector:	Web Link 1 (Web Link)
Started:	Monday, June 13, 2022 1:35:29 PM
Last Modified:	Monday, June 13, 2022 4:34:27 PM
Time Spent:	02:58:57
IP Address:	73.189.143.76

Page 1

Q1

General Information

Name	**Patrick Walsh**
Address	**11 Vine Ave**
City/Town	**San Anselmo**
State/Province	**California**
ZIP/Postal Code	**94960**
Email Address	**walsh_pjw+marin@protonmail.com**
Phone Number	**5044003463**

Q2

Years residing in San Anselmo

2

Q3

Occupation

Consultant (Education)

Q4

References

Name/Phone	**Scott Binnings/2029971012**
Name/Phone	**Marjorie McDonald/9258766179**

Q5

Are you available to attend daytime meetings?

Yes

Q6

Are you available to attend evening meetings?

Yes

Q7

Days you are not available to attend daytime/nighttime meetings

Respondent skipped this question

Q8

Please indicate which segments of the community you would represent as a member of the HEAC

Owner

Q9

Which answer best describes the type of housing you live in currently

Single Family (1 unit, or 1 unit plus an ADU)

Q10

Household Type (check all that apply)

Family with children

Q11

Age Group

Adult

Q12

Household (hh) Income Group (voluntary, not required - 1 or 2 adult earners)

Earning more than $120,200 for a 1-person hh, $137,350 for a 2-person hh

Q13

Briefly describe your educational, employment, and civic participation background

I have a BA in Political Science from the University of Florida, a MA in Organizational Leadership from Columbia University and an Ed.D in Educational Leadership from the University of Florida.
I am currently self-employed as a consultant specializing in education, particularly charter school authorization. I began my career as a teacher and have worked in education for nearly 20 years, including several years leading charter school oversight for the state of Louisiana.
I am a recent resident of San Anselmo and moved during the pandemic so I am just beginning to engage in the local community. I first became engaged with community service through my experience becoming an Eagle Scout. Before moving to California, I was very active in the New Orleans community including serving on the board of the Young Leadership Council (including 1 year as Vice President) and as a founding member of the Independent Police Monitor Task Force. I hope to become more engaged in the community as in-person events become more accessible.

Q14

Briefly describe your interest your interest in serving on the Housing Element Advisory Committee (HEAC)

I bring a range of experiences and knowledge to the HEAC and hope to learn from this process and other members of the community. First, I have a professional background in policy and have actively followed the RHNA process and data; I am familiar with the RHNA process, California's legislative process, as well as our local government.
Having recently purchased a home in San Anselmo, I am intimately familiar with the challenges of buying a home and homeownership in Marin and across California at this time. In addition, my home has an approved ADU that is structured and approved as a rental unit but, for various reasons, we have opted not to put it on the rental market at this time; accordingly, I have a vested interest in the rental market. Further, I have worked in schools located in socioeconomically disadvantaged communities for nearly 20 years so I am deeply passionate about fair and accessible housing and their value to local communities.
I hope to participate in the HEAC to engage with other members of the local community as we learn together and solve complex community-wide problems. I am thankful for the opportunity to live in such a delightful town and hope to give back to the local community by offering my time and service.

Q15

DECLARATIONS - Please acknowledge each item by checking the corresponding box

I am aware that the Housing Element Update process is up to a 1-year effort and I am prepared to make the commitment to serve on the HEAC for this time period. I understand my role on the HEAC and am prepared to serve accordingly.

,

I request that you consider my application to be a member of the San Anselmo Housing Element Advisory Committee (HEAC). I am prepared and will be able to devote the time necessary to perform the duties of this body. I am also aware that my application will be made public as an applicant for this body and that this application will be held on file for subsequent vacancies.

Q16

By entering your name below, you acknowledge that that you have completed this application for yourself and no one else.

Patrick Walsh

#8

COMPLETE

Collector:	Web Link 1 (Web Link)
Started:	Wednesday, June 15, 2022 2:20:17 PM
Last Modified:	Wednesday, June 15, 2022 3:31:04 PM
Time Spent:	01:10:46
IP Address:	75.101.47.58

Page 1

Q1

General Information

Name	**Erin Aradi**
Address	**1314 Sir Francis Drake Blvd**
City/Town	**San Anselmo**
State/Province	**CA**
ZIP/Postal Code	**94960**
Email Address	**efalucy@yahoo.com**
Phone Number	**415-577-7370**

Q2

Years residing in San Anselmo

4+ (50+ in Marin)

Q3

Occupation

Academic Advisor at Dominican University

Q4

References

Name/Phone	**Kristen Turek, Sr. Director, Marin Community Foundation/415-250-3140 (San Anselmo resident)**
Name/Phone	**Daniel Cassidy, Asst Dean, Dominican School of Business/415-743-0025 (San Anselmo resident)**

Q5

Are you available to attend daytime meetings?

No

Q6

Are you available to attend evening meetings?

Yes

Q7

Days you are not available to attend daytime/nighttime meetings

Respondent skipped this question

Q8

Please indicate which segments of the community you would represent as a member of the HEAC

Owner

Q9

Which answer best describes the type of housing you live in currently

Duplex (2 units)

Q10

Household Type (check all that apply)

Family without children

Q11

Age Group

Adult

Q12

Household (hh) Income Group (voluntary, not required - 1 or 2 adult earners)

Earning between $60,900 and $120,200 annually for 1-person hh, $69,600-$137,350 for a 2-person hh

Q13

Briefly describe your educational, employment, and civic participation background

- B.S. UC Davis
- M.A. UC Berkeley
- 22 years of employment at Dominican University serving on multiple committees (e.g., the Institute for Leadership Studies Board)
- Member of San Anselmo Resilient Neighborhoods group in 2018
- I have attended presentations offered by the town of San Anselmo, such as the two on the Hub studies.

Q14

Briefly describe your interest your interest in serving on the Housing Element Advisory Committee (HEAC)

I am a lifelong Marin resident. I have mostly been a renter, but in 2017 I was lucky enough to purchase one of the few below market rate homes in San Anselmo through the Marin Housing Authority. I stay current on housing legislation, within both California and Marin County. Serving on the HEAC sounds really interesting and I believe my background and experience are directly in line with your qualifying factors.

Q15

DECLARATIONS - Please acknowledge each item by checking the corresponding box

I am aware that the Housing Element Update process is up to a 1-year effort and I am prepared to make the commitment to serve on the HEAC for this time period. I understand my role on the HEAC and am prepared to serve accordingly.

,

I request that you consider my application to be a member of the San Anselmo Housing Element Advisory Committee (HEAC). I am prepared and will be able to devote the time necessary to perform the duties of this body. I am also aware that my application will be made public as an applicant for this body and that this application will be held on file for subsequent vacancies.

Q16

By entering your name below, you acknowledge that that you have completed this application for yourself and no one else.

Erin Aradi

#9

COMPLETE

Collector: Web Link 1 (Web Link)
Started: Wednesday, June 15, 2022 8:13:53 PM
Last Modified: Wednesday, June 15, 2022 8:23:07 PM
Time Spent: 00:09:14
IP Address: 73.222.248.193

Page 1

Q1

General Information

Name	**Kathy Ogren**
Address	**18 Kensington Ct.**
City/Town	**San Anselmo**
State/Province	**CA**
ZIP/Postal Code	**94960**
Email Address	**Kathy_Ogren@redlands.edu**
Phone Number	**9097544310**

Q2

Years residing in San Anselmo

As a work related resident, 3 years.

Q3

Occupation

Senior Executive, University of Redlands, Marin Campus

Q4

References

Name/Phone	**President Krista Newkirk, 909-793-2121**
Name/Phone	**Chris Ocker, 415-613-2418**

Q5

Yes

Are you available to attend daytime meetings?

Q6

Are you available to attend evening meetings?

Yes

Q7

Days you are not available to attend daytime/nighttime meetings

Respondent skipped this question

Q8

Please indicate which segments of the community you would represent as a member of the HEAC

Owner

Q9

Which answer best describes the type of housing you live in currently

Single Family (1 unit, or 1 unit plus an ADU)

Q10

Household Type (check all that apply)

Family without children

Q11

Age Group

Older Adult (65+)

Q12

Household (hh) Income Group (voluntary, not required - 1 or 2 adult earners)

Earning more than $120,200 for a 1-person hh, $137,350 for a 2-person hh

Q13

Briefly describe your educational, employment, and civic participation background

I manage the University of Redlands Marin campus in San Anselmo, living on site and supervising rentals to students and non students

Q14

Briefly describe your interest your interest in serving on the Housing Element Advisory Committee (HEAC)

The University of Redlands seeks to better understand and serve the community through its provision of housing resources. I would like to learn more and contribute to community on behalf of the University. I have recently located to the campus as a permanent resident.

Q15

DECLARATIONS - Please acknowledge each item by checking the corresponding box

I am aware that the Housing Element Update process is up to a 1-year effort and I am prepared to make the commitment to serve on the HEAC for this time period. I understand my role on the HEAC and am prepared to serve accordingly.

,

I request that you consider my application to be a member of the San Anselmo Housing Element Advisory Committee (HEAC). I am prepared and will be able to devote the time necessary to perform the duties of this body. I am also aware that my application will be made public as an applicant for this body and that this application will be held on file for subsequent vacancies.

Q16

By entering your name below, you acknowledge that that you have completed this application for yourself and no one else.

Kathy Ogren

#10

COMPLETE

Collector:	Web Link 1 (Web Link)
Started:	Thursday, June 16, 2022 2:57:24 PM
Last Modified:	Thursday, June 16, 2022 3:20:26 PM
Time Spent:	00:23:02
IP Address:	75.144.245.62

Page 1

Q1

General Information

Name	**Jeff**
Address	**Kroot**
City/Town	**San Anselmo**
State/Province	**CA**
ZIP/Postal Code	**94960**
Email Address	**JKArch2@comcast.net**
Phone Number	**(415) 456-5531**

Q2

Years residing in San Anselmo

43

Q3

Occupation

Architect

Q4

References

Name/Phone	**Ellen Caldwell (415) 298-8860**
Name/Phone	**Vlad Iojca (415) 774-6776**

Q5

Are you available to attend daytime meetings?

Yes

Q6 Are you available to attend evening meetings?	**Yes**
Q7 Days you are not available to attend daytime/nighttime meetings	**Respondent skipped this question**
Q8 Please indicate which segments of the community you would represent as a member of the HEAC	**Owner**
Q9 Which answer best describes the type of housing you live in currently	**Single Family (1 unit, or 1 unit plus an ADU)**
Q10 Household Type (check all that apply)	**Family without children**
Q11 Age Group	**Older Adult (65+)**
Q12 Household (hh) Income Group (voluntary, not required - 1 or 2 adult earners)	**Earning more than $120,200 for a 1-person hh, $137,350 for a 2-person hh**

Q13

Briefly describe your educational, employment, and civic participation background

UC Berkeley, Bach of Architecture, 1967
UC Berkeley, Structural Engineering, no degree 1967
General Contractor's B1 License, 1971
Architect License, 1973
Opened Architects Office in San Anselmo, 1975
San Anselmo Board of Appeals, 1982-1984
Winner of Fairfax Affordable Housing Contest, 1983
San Anselmo Planning Commissioner, 1984-1993
San Anselmo Town Council 1993-2005
San Anselmo Mayor, 1996-1997
San Anselmo Mayor, 2000-2001
San Anselmo History Commissioner, 2006-2009
San Anselmo Town Council, 2009-2013

Q14

Briefly describe your interest your interest in serving on the Housing Element Advisory Committee (HEAC)

I am a long time resident of San Anselmo and an architect with an office in Town. Over the years I have developed a good feel for the needs of our community through my career and community service. I understand the need for affordable housing, but I am concerned about overdevelopment and the destruction of our heritage homes and neighborhoods. There is a balance that must be made and I feel my input on the Committee will be useful.

Q15

DECLARATIONS - Please acknowledge each item by checking the corresponding box

I am aware that the Housing Element Update process is up to a 1-year effort and I am prepared to make the commitment to serve on the HEAC for this time period. I understand my role on the HEAC and am prepared to serve accordingly.

,

I request that you consider my application to be a member of the San Anselmo Housing Element Advisory Committee (HEAC). I am prepared and will be able to devote the time necessary to perform the duties of this body. I am also aware that my application will be made public as an applicant for this body and that this application will be held on file for subsequent vacancies.

Q16

By entering your name below, you acknowledge that that you have completed this application for yourself and no one else.

Jeff Kroot

San Anselmo Council Minutes
Regular Meeting
Town Council Chambers and Via teleconference
Tuesday, June 14, 2022

1. 6:10 p.m. Interviews with Applicants to the Planning Commission and Climate Action Committee

Mayor Fineman called the Regular meeting to order at 7:00 p.m.

Call to Order: Optional Pledge of Allegiance

COUNCILMEMBERS PRESENT: Alexis Fineman, Mayor
Steve Burdo, Vice-Mayor
Eileen Burke
Brian Colbert

COUNCILMEMBERS ABSENT: Ford Greene

STAFF MEMBERS PRESENT: Dave Donery, Town Manager
Megan Acevedo, Town Attorney
Heidi Scoble, Planning Director
Sean Condry, Public Works Director
Erica Freeman, Building Official
Jeff Zuba, Finance Director

Open Time for Public Expression

Ms. Lucy Dilworth asked the Council to think very carefully about doubling the Measure "D" Sales Tax and proposing it without a term limit. Inflation is the highest it has been in 40 years.

Mr. Doug Kelly agreed that doubling the Sales Tax is inappropriate. The language in the ballot regarding the term limit ("until repealed by voters") is not understood by the public.

Ms. Sue Saunders thanked the Council for the allocation of funds to the "Ride and Drive Clean" campaign. It was a huge success!

Guy stated he and some friends started an organization called "The Friends of Creek Park". They are concerned about the use of the park. He discussed the Town's Regional Housing Needs Allocation (RHNA) numbers.

Mr. Rene Voss urged the Council to oppose AB 396 which allows PG&E to cut trees along their power lines without notice and at their discretion. He stated wood chippers are a violation of the Town's Noise Ordinance.

Abby was concerned about PG&E cutting and topping trees on private property without permits.

Council committee liaison reports, requests for future agenda items, questions and comments to staff; staff miscellaneous item

Councilmember Burke reported she attended the "Ember Stomp" event; took the Historical Bicycle Tour of San Anselmo along with Mayor Fineman; attended the Archie Williams High School Graduation; attended "Live on the Avenue"; relayed a comment from a resident about the open public alcohol consumption downtown.

Vice Mayor Burdo reported he attended "Ember Stomp"; attended the June 8th Ross Valley Fire Board meeting; attended the June 7th Racial Equity Committee meeting; attended "Live on the Avenue"; gave a shout-out to Sue Saunders; asked that the Council discuss the Measure D "sunset" clause at an upcoming meeting.

Councilmember Colbert supported Vice Mayor Burdo's request about the future agenda item; attended the Transportation Authority of Marin (TAM) meeting; went to all the downtown events; participated in an on-line discussion about Sir Francis Drake Boulevard sponsored by Alta Journal.

Mayor Fineman reported she attended the community Pride Month Flag raising event; has been involved in on-going conversations about PG&E tree cutting issues; attended the celebration for Virginia Stapleton; reminded everyone that COVID is prevalent and asked people to be cautious; welcomed the Climate Action Coordinator, a shared position with the Town of Fairfax; would like to place the SB 396 issued on the next meeting's agenda.

2. Consent Agenda

2.1 Minutes of May 24, 2022

2.2 Report of Warrants Issued, May 2022

2.3 Consider Adoption of Resolution to Allow for Virtual Town Council Meetings in Compliance with AB 361

2.4 Appoint applicants to the Climate Action Committee

2.5 CalRecycle SB 1383 Local Assistance Grant Program Aware

2.6 Establishing Job Description and Pay Range for Public Works Manager Position

Mayor Fineman opened the meeting to public comments.

There were no comments.

Mayor Fineman closed the meeting to public comments.

Vice Mayor Burdo asked for the removal of item #2.4 for discussion.

Councilmember Burke asked for the removal of items #2.1 and #2.5.

M/s, Burdo/Burke, Motion to approve Consent Agenda items #2.2, 2.3, and 2.6.
AYES: Burdo, Burke, Colbert, Mayor Fineman
ABSENT: Greene

2.1 Minutes of May 24, 2022

Councilmember Burke made a correction to the minutes.

2.4 Appoint applicants to the Climate Action Committee

Vice Mayor Burdo stated one of the applicants was unable to show up. He recommended the appointment of Cynthia Briggs.

2.5 CalRecycle SB 1383 Local Assistance Grant Program Aware

Councilmember Burke asked if the grant would be used to fund the Climate Action employee and if the grant was the only money being devoted to this issue.

Town Manager Donery stated the grant will go into the Climate Action Fund and must be used to further SB 1383 implementation and compliance. There is a need for more than one person so staff plans to hire consultants and fellows.

M/s, Burke/Colbert, Motion to approve Consent Agenda items #2.1, 2.4, and 2.5 with the corrections to the May 24th minutes and the appointment of Cynthia Briggs to the Climate Action Committee.
AYES: Burdo, Burke, Colbert, Mayor Fineman
ABSENT: Greene

Council Items

3. Flood Zone 9

Ms. Liz Liss, County of Marin, presented a PowerPoint presentation that included the following: 1) Ross Valley Flood Protection and Watershed Program Update; 2) Ross Valley Program Work Plan and Project Update; 3) FEMA Requirements for Development in a Regulatory Floodway; 4) 90% Baffle Design (634-636 San Anselmo Avenue); 5) Options Discussed by Board; 6) SAFRR Timeline with No Rise Baffle Structure.

Ms. Liss answered questions from the Council regarding whether mitigations for the twenty downstream properties have been determined; does the baffle design assist downstream properties in terms of flood mitigations; if there are funds available for mitigations on those downstream properties; if the baffle project has been certified by FEMA; if approval of the design is anticipated; does the Town need to certify the baffle project; if certified, would the Town accept any form of liability; the relationship between Flood Zone 9 and the Town of San Anselmo in terms of decision making; properties owned by Flood Zone 9; could the revenues and expenditures of Flood Zone 9 be made available to the Town; property owners and liability; future negotiations between the Town and Flood Zone 9.

Mayor Fineman opened the meeting to public comments.

Ms. Cathy Shafer stated she was an engineer with FEMA and worked on the recent Flood Map updates. The “Floodway” designation is an artificial designation created to ensure that the base flood flows through the channel and is not obstructed by development. She offered to work with Ms. Liss to create a video for explanation purposes.

Ms. Carol Page stated “certification” means that the baffle is in place. They should be questioning the design life of the baffle once it is in place. She asked if the peer review has been finished.

Mr. Ross Asselstine stated the Town’s participation in Flood Zone 9 has resulted in a waste of

time and money. It is time to start talking about exiting Flood Zone 9.

Ms. Ann Walter opposed the removal of the platform and insertion of a baffle since it did not benefit upstream or downstream properties. The baffle is not mitigation.

Mayor Fineman closed the meeting to public comments.

Vice Mayor Burdo stated there is no action required tonight. He thanked Ms. Liss for the update.

Councilmember Burke asked if there is a deadline for the Town to decide on their direction.

Councilmember Colbert wanted to memorialize where the Town stands with FEMA and their discussion of the “no rise”. It is important to convey the state of the grant to the public and have a discussion about the baffles.

Councilmember Burke stated she wants the Council to discuss whether or not to stay in Flood Zone 9. There should be more public discussion including a survey before a decision is made.

Mayor Fineman agreed that there should be more discussion including what a Flood Zone 9 exit would look like. She was not in favor of a survey at this time.

Vice Mayor Burdo noted Councilmember Greene is the Town’s representative to Flood Zone 9 and since he is absent from this meeting there should be further discussions.

Town Manager Donery stated staff would work on the next steps.

4. Consider approval of a Resolution establishing a Housing Element Advisory Committee (HEAC) appoint one Town Councilmember to the committee, and direct staff to bring recommendations for the appointment of one Planning Commissioner and three public applicants to the next Town Council meeting for consideration and approval

Planning Director Scoble presented a staff report and gave a PowerPoint presentation. She, along with Town Manager Donery, answered questions from the Council regarding whether staff has received any applications; the thought process regarding the composition of the committee.

Mr. Robert Cane, Principle with Houseal LaVigne, gave a PowerPoint presentation.

Mayor Fineman opened the meeting to public comments.

Guy was concerned about the requirement for 13,000 new units for Marin County. He discussed the concept of “manufactured consent” and the elimination of local control.

Mayor Fineman closed the meeting to public comments.

Councilmember Burke liked the idea of a five-person committee and volunteered to serve.

Vice Mayor Burdo supported a five-person committee and would like to see a member of the Climate Action Committee included.

Mayor Fineman encouraged residents to apply and stated she would like to be on the committee.

Town Manager Donery stated staff would like to move forward with the interviews next Monday or Tuesday and would like the Council representatives to be present.

Mayor Fineman suggested both she and Councilmember Burke serve on the committee and that the Council appoint four members of the public (for a total of seven committee members).

M/s, Burke/Colbert, Motion to Consider approval of a Resolution establishing a Housing Element Advisory Committee, with a change to the language in 3(a) and (d), and appoint two Town Councilmember to the committee, and direct staff to bring recommendations for the appointment of one Planning Commissioner and four public members of the public.
AYES: Burdo, Burke, Colbert, Mayor Fineman
ABSENT: Greene

5. Introduction and First Reading of an Amendment to the San Anselmo Municipal Code adding Chapter 24 “All Electric Construction in Newly Constructed Residential Buildings” to Title 9 “Building Regulations”; and Amendment to Chapter 9-19 “Green Building Requirements” for consistency

Building Official Freeman presented a staff report. She and Public Works Director Condry answered questions from the Council regarding the number of Accessory Dwelling Units (ADU) that are voluntarily going to all-electric; prescriptive and performance based requirements of the California Building Code; the exemption of food services establishments; survey responses; Title 9, Section 24.05(b) exemption methodology.

Ms. Kathleen Gundry, Chair of the Climate Action Commission, gave a report on the importance of adopting the ordinance.

Mayor Fineman opened the meeting to public comments.

Ms. Sue Saunders stated she was speaking as a resident of San Anselmo and not a member of the Climate Action Commission. She strongly supported adoption of the ordinance.

Ms. Ellie Cohen, Ms. Lucy Motican, and Mr. Rene Voss supported adoption of the ordinance.

Brett was opposed to adoption of the ordinance because the terms “local climatic and geologic conditions” were not used correctly. Heating homes with natural gas is extremely efficient.

Mayor Fineman closed the meeting to public comments.

Vice Mayor Burdo stated this is the direction the Town should be moving and he supported adoption of the ordinance. A move away from fossil fuel dependency is necessary.

Councilmember Burke stated for the most part this is necessary. Environmental goals can be met through a variety of methods and within a reasonable timetable through the State schedule. She opposed exempting restaurants. The survey indicated that citizens are opposed. She agreed that the finding regarding local conditions cannot be met.

Town Attorney Acevedo stated this ordinance is narrowly focused on residential construction and commercial will be forthcoming. Staff would need to redraft the ordinance to include restaurants.

Councilmember Colbert supported adoption of the ordinance.

Mayor Fineman supported the ordinance but had trouble with the exemption. Substantial remodels should be included but she wanted to move forward with this ordinance.

Vice Mayor Burdo made a motion to adopt the ordinance. There was no second.

M/s, Burke/Fineman, Motion to introduce and waive first reading of an Amendment to the San Anselmo Municipal Code adding Chapter 24 “All Electric Construction in Newly Constructed Residential Buildings” to Title 9 “Building Regulations”; and Amendment to Chapter 9-19 “Green Building Requirements” for consistency with the inclusion of food service establishments and commercial kitchens.
AYES: Burke, Mayor Fineman
NOES: Burdo, Colbert
ABSENT: Greene

The motion did not pass.

M/s, Burdo/Colbert, Motion to introduce and waive first reading of an Ordinance of the Town Council of the Town of San Anselmo Amendment to the San Anselmo Municipal Code adding Chapter 24 “All Electric Construction in Newly Constructed Residential Buildings” to Title 9 “Building Regulations”; and Amendment to Chapter 9-19 “Green Building Requirements” for consistency.
AYES: Burdo, Colbert, Mayor Fineman
NOES: Burke
ABSENT: Greene

The Council took a 10-minute break at 10:05 p.m.

M/s, Fineman/Burdo, Motion to continue with the agenda.
AYES: Burdo, Burke, Colbert, Mayor Fineman
ABSENT: Greene

6. 2021/2022 Budget Amendment and 2022/2023 Preliminary Proposed Budget and Work Plan

Finance Director Zuba presented a staff report and a PowerPoint presentation that included the following: 1) 2021/22 General Fund Review; 2) 2022/23 Proposed Budget; 3) General Fund Revenues Highlights; 4) General Fund Expenditures Highlights; 5) Town Wide Funds; 6) Recommendations; 7) Conclusions. He answered questions from the Council regarding whether staff is forecasting a “Black Swan” event with respect to the financials; if staff could provide comparable data from other jurisdictions.

Mayor Fineman opened the meeting to public comments.

There were no comments.

Mayor Fineman closed the meeting to public comments.

M/s, Burke/Burdo, Motion to adopt the Resolution amending the Fiscal Year 2021/2022 Budget.
AYES: Burdo, Burke, Colbert, Mayor Fineman
ABSENT: Greene

Finance Director stated staff would bring the Fiscal Year 2022/2023 Proposed Budget to the Council at the next meeting.

7. 9 Laurel Avenue, APN 007-112-11, appeal by Applicants Hassan Afrookteh and Brooke Peterson of the Planning Commission decision to deny applications for design review for a second story addition, a variance to allow two parking spaces to be created in the north side setback (8-foot side setback required), with one of the two in the front setback (20-foot setback required), a variance to allow an area of pavers in the front setback to be used for an additional, undersized, parking space, a demolition permit to remove more than 50% of the exterior walls (54.3% demolition proposed, which included 25.3% related to the residence and the balance for demolition of an attached garage structure), and a variance to maintain the existing lower level of the structure 16 feet to 19 feet from the front property line (20-foot setback required for over 50% demolition).

Planning Director Scoble presented the staff report and gave a PowerPoint presentation. The Council will be reviewing the merits of the project and determining whether or not the project can be approved and the requisite Findings can be achieved. She recited the Findings.

Mayor Fineman opened the Public Hearing.

Ms. Brooke Peterson, appellant/applicant, gave a PowerPoint presentation and described the project. She urged the Council to grant the appeal and approve the project.

Mr. Hassan Afrookteh, appellant/applicant, stated the Planning Commission discussed the shadow impacts and asked for an independently prepared shadow study. He produced two peer review shadow studies and discussed the findings. He discussed the privacy issues and stated the impacts from a second story are a part of life.

Mr. Matthew Noel, Laurel Avenue, opposed the project and disagreed with the assertion that the Planning Commission “abused its discretion” and that its decision “was not based on evidence”. There were three thorough and exhaustive meetings on this project.

Ms. Fran Farmer, Laurel Avenue, gave a PowerPoint presentation and stated the project would block the ambient light to her house.

Mr. Chris Long objected to the project because it would tower over the one-story houses along the street. It would also block the light and air and impact privacy.

Mr. Jerry Curley, San Anselmo Avenue, stated he lives east of the proposed project and shares a fence. He is opposed to the project because it would affect his privacy, light, and air.

Mr. Herb Miller, Laurel Avenue, opposed the proposed second story. It would be out of character with the neighborhood. He did support the Accessory Dwelling Unit (ADU) conversion.

Mr. Peter Kalb stated this project is appropriate for the neighborhood and in character with the Town. The house has gone through several renovations that have reduced impacts to the neighborhood. He urged the Council to grant the appeal.

Ms. Ellen Caldwell, Laurel Avenue, asked that the Council deny the request for a second-story. The design is out of character with the neighborhood.

Ms. Jerri Lynn, Laurel Avenue, stated she was drawn to this neighborhood because of the small bungalow houses. The project is a large, two-story building on a small lot.

Mr. Jason Weber, Floribel Avenue, supported the project. The design fits within the Town's rules and the applicants have worked hard to make adjustments.

Mr. Dave Baker agreed with the comments made by Jason. The rules need to be applied consistently.

Ms. Coleen Noel, Laurel Avenue, stated the subject house is not taken care of and the neighbors are struggling with the process.

Mr. Bradley Long stated he lives two doors down from the proposed project. The owners have done nothing to improve the appearance of the house. He asked about the parking.

Mr. John Sharp, attorney for the appellants/applicants, stated an "abuse of discretion" occurs when there is insufficient or insubstantial evidence to support the findings. Substantial evidence is defined as "expert opinion based on fact". The appellants shadow study was peer reviewed by a third-party hired by the Town. The Resolution is inaccurate in many respects and the evidence for the Findings is insufficient.

Mayor Fineman closed the Public Hearing.

Councilmember Burke stated this is a "de novo" review which means it should be looked at with "fresh eyes". Appeals of Planning Commission decisions deserve the full attention and consideration of the Council. The Design Review process and granting of Variances are designed not to take away rights but to preserve quality of life issues such as air, light, space, etc. The project is out of character with the neighborhood in scale, mass, and bulk- this is a neighborhood of bungalows and tiny cottages. It would cast shadows on adjacent properties and impact privacy. A substantial remodel of this house could be an improvement to the neighborhood. There is substantial evidence to uphold the decision of the Planning Commission. The story poles should be taken down in one week.

Vice Mayor Burdo agreed with the comments made by Councilmember Burke. The evidence is overwhelming to make the Findings. The project is out of character with the neighborhood and the shadow impacts would be substantial. The project would impact the privacy of the neighbors. He would vote to deny the appeal and urged the appellants to "go back to the drawing board".

Councilmember Colbert stated he supports the decision of the Planning Commission. The privacy impacts are serious and the design is not a good fit for this neighborhood.

Mayor Fineman agreed with the comments made by Councilmember Burke. The focus is on the qualitative impact to the neighborhood. The project would have substantial impacts to light.

The Council noted they read all the materials and did not have any "ex parte" communications.

M/s, Burdo/Burke, Motion to deny the appeal by applicants Hassan Afrookteh and Brooke Peterson of the Planning Commission decision to deny the applications for 9 Laurel Avenue.
AYES: Burdo, Burke, Colbert, Mayor Fineman
ABSENT: Greene

M/s, Burdo/Colbert, Motion to adjourn the meeting at 11:55 p.m. in honor of Mr. Jay Murphy, a long-time San Anselmo resident and community member.

Respectfully submitted,

Toni DeFrancis,
Recording Secretary

525 San Anselmo Avenue
San Anselmo, CA 94960

Town of San Anselmo

Staff Report

TO: Town Council | 6/28/2022 | **Item #:** 1.9.

FROM:
David Donery, Town Manager

SUBJECT:
Authorize the mayor to send a letter in opposition to Senate Bill (SB) 396 (Dahle) - Forestry: electrical transmission or distribution lines: clearances: notice and opportunity to be heard.

RECOMMENDATION
Authorize the mayor to send a letter in opposition to SB 396 (Dahle).

DISCUSSION
SB 396 would allow electrical utility companies to enter private property without permission of the landowner or homeowner; trim and cut down trees - including live trees; and then leave the downed trees, limbs, and debris for the owner to deal with. It would allow the companies to ignore environmental considerations, the rights of private landowners and homeowners, and the public interest, even when doing so would increase the fire risk for landowners and communities. The draft letter is modelled on one sent by the Sierra Club. It provides additional details on the why the Council may wish to oppose this legislation.

FISCAL IMPACT
None.

CEQA AND CLIMATE ACTION PLAN CONSISTENCY
Authorizing the mayor to send this letter is exempt from the California Environmental Quality Act (CEQA), under the “common sense” exemption, because it can be seen with certainty that there is no possibility that the activity in question may have a significant effect on the environment. (Cal. Code Regs. tit. 14, § 15061).

Attachment 1 - Letter
Attachment 2- SB 396

Alexis Fineman
Mayor

Steve Burdo
Vice Mayor

Eileen Burke
Council Member

Brian Colbert
Council Member

Ford Greene
Council Member

TOWN OF
SAN ANSELMO
EST. 1907

Town of San Anselmo
525 San Anselmo Avenue, San Anselmo, CA 94960-2682
(415) 258-4616
www.townofsananselmo.org

The Honorable Luz Rivas Chair, Assembly Committee on Natural Resources

Subject: Via Position Letter Portal Re: SB 396 (Dahle) Forestry: electrical transmission or distribution lines: clearances: notice and opportunity to be heard. – OPPOSE

Dear Chair Rivas,

The Town of San Anselmo opposes SB 396 (Dahle), which would negatively impact California's forest ecosystems and communities by allowing electrical corporations to cut far outside of utility easements around powerlines without adhering to the Forest Practice Rules which exist to minimize damage to natural resources.

SB 396 would give electrical utility companies "full discretion" to enter private property without permission of the landowner or homeowner; trim and cut trees, including the felling of live trees, with no limit on the number or size of the trees cut; and then leave the downed trees, limbs, and debris for the owner to deal with. Under SB 396, electrical corporations and their contractors would have no incentive to minimize damage or to protect the property and interests of homeowners. Under SB 396, if the landowner requests that the felled trees be removed, the electrical corporation is under no time constraint to do so and can ignore the request entirely if the electrical corporation considers it unsafe or impractical to clean up the downed trees, wood, and debris.

SB 396 gives this "full discretion" to any business entity that "owns, controls, operates, or maintains" an electrical transmission or distribution line, presumably defined extensively to include contractors who may have limited expertise in preserving tree health or minimizing damage to the property. SB 396 would require only that corporations make a "good faith" effort to notify landowners before trespassing on their property to cut their trees without their permission or against their wishes. The bill gives landowners no authority to protect their property interests except for "an opportunity to be heard." By allowing electrical corporation contractors to leave behind downed trees, wood, and debris, the bill not only makes clean up the responsibility of the landowner, it also increases the fire risk for the landowner and the community by increasing the amount of flammable debris on the forest floor. Under SB 396 electrical corporations would have strong incentive to contract the cheapest possible operation, regardless of impacts to private landowners, the environment, and the public

interest. If it is cheaper to cut whole, live trees far beyond the utility easement and on private properties and leave the debris behind, rather than to selectively cut trees, protect surrounding trees, and clean up the logging debris, SB 396 gives private landowners and the public no real means for providing input on that decision.

In sum, SB 396 gives electrical corporations and their contractors unprecedented authority to ignore environmental considerations, the rights of private landowners and homeowners, and the public interest, to minimize the electrical corporation's costs of operation, even when doing so increases the fire risk for landowners and communities. For these reasons, we oppose SB 396.

Sincerely,

Alexis Fineman, Mayor
Town of San Anselmo

CC: Members and Staff of the Assembly Committee on Natural Resources

AMENDED IN ASSEMBLY JUNE 14, 2022

AMENDED IN ASSEMBLY MAY 12, 2022

AMENDED IN ASSEMBLY SEPTEMBER 3, 2021

AMENDED IN ASSEMBLY JULY 12, 2021

AMENDED IN ASSEMBLY JUNE 30, 2021

SENATE BILL No. 396

Introduced by Senator Dahle
(Principal coauthor: Assembly Member Mayes)

February 11, 2021

An act to *amend Section 4295.5 of, and to* add and repeal Section 4295.6 ~~of~~ *of,* the Public Resources Code, and to add and repeal Section 8386.7 of the Public Utilities Code, relating to forestry, and declaring the urgency thereof, to take effect immediately.

LEGISLATIVE COUNSEL'S DIGEST

SB 396, as amended, Dahle. Forestry: electrical transmission or distribution lines: clearances: notice and opportunity to be heard.

Existing law authorizes any person who owns, controls, operates, or maintains any electrical transmission or distribution line to traverse land as necessary, regardless of land ownership or express permission to traverse land from the landowner, after providing notice and an opportunity to be heard to the landowner, to prune trees to maintain clearances, as provided, and to abate, by pruning or removal, any hazardous, dead, rotten, diseased, or structurally defective live trees. Existing law authorizes this abatement at the full discretion of the person that owns, controls, operates, or maintains the electrical transmission

or distribution lines, except for certain applicable minimum clearance requirements for those lines.

Under existing law, the Public Utilities Commission, which has regulatory authority over public utilities, including electrical corporations, has established additional vegetation management requirements.

This bill ~~would, regarding those provisions related to electrical lines and abatement activities for~~ *would subject property access by* an electrical corporation ~~who owns, controls, operates, or maintains an~~ *for felling, cutting, or trimming trees to provisions similar to those applicable to pruning trees, maintaining clearances, and abating trees around* electrical transmission or distribution ~~line, specify that covered abatement activities include felling, cutting, or trimming trees.~~ *lines, including provisions requiring notice to the landowner and an opportunity to be heard.* The bill would explicitly require ~~all these line clearance and tree pruning and abatement~~ *tree felling, cutting, and trimming* activities to comply with ~~the commission's~~ *certain commission* vegetation management rules, if ~~applicable.~~ *applicable, and with the California Coastal Act of 1976 and the forest practice rules and regulations adopted by the State Board of Forestry and Fire Protection.* The bill would require any trees that are felled, cut, or trimmed, as provided, to remain on the property of the landowner, unless the landowner timely requests the electrical corporation to treat or remove the wood, as specified, at no cost to the landowner. *The bill would require woody material that was trimmed, cut, or felled to be treated to achieve a maximum postactivity depth of 9 inches when operating within 150 feet of a structure, public road, or other infrastructure, except where the landowner has requested that material to be kept intact. The bill would exempt electrical cooperatives, as defined, from these provisions.* The bill would repeal these provisions on January 1, 2026.

This bill would require the commission, on or before January 1, 2025, to develop, through a public process, standardized content *and methods of delivery* to be used to satisfy the landowner notice requirement for *both* vegetation abatement *and felling, cutting,* and trimming activities, ~~including~~ *including, among other things,* a description of the process that the electrical corporation ~~who owns, controls, operates, or maintains an electrical transmission or distribution line~~ must provide for a landowner to exercise the opportunity to be ~~heard, as specified, when challenging~~ *heard regarding* the proposed *pruning, maintaining*

clearances, abating, felling, cutting, or trimming of trees on property where the electrical corporation does not have existing rights or ~~the~~ express *landowner* permission ~~to traverse land from the landowner. The~~ *to do so. Until the standardized content of the notice is developed, the* bill would require ~~the~~ *an* electrical corporation ~~who owns, controls, operates, or maintains an electrical transmission or distribution line~~ to make a good faith effort to communicate the processes ~~of vegetation abatement~~ *associated with the felling, cutting,* and trimming ~~activities, as provided,~~ *of trees under these provisions* to the landowner ~~before the development of the standardized content, and~~ before felling, cutting, or trimming trees on property where the electrical corporation does not have existing rights or the express permission ~~to do so~~ from the landowner. The bill would repeal these provisions on January 1, 2026.

This bill would declare that it is to take effect immediately as an urgency statute.

Vote: ⅔. Appropriation: no. Fiscal committee: yes. State-mandated local program: no.

The people of the State of California do enact as follows:

SECTION 1. Section 4295.5 of the Public Resources Code is amended to read:

4295.5. (a) Notwithstanding any other ~~law,~~ *state or local law or regulation that would otherwise impose liability for trespass or damages for pruning trees or vegetation as described in this section,* including Section 4295, a person who owns, controls, operates, or maintains an electrical transmission or distribution line may traverse land as necessary, regardless of land ownership or express permission to traverse land from the landowner, after providing notice and an opportunity to be heard to the landowner, to prune trees to maintain clearances pursuant to Section 4293, and to abate, by pruning or removal, any hazardous, dead, rotten, diseased, or structurally defective live trees. The clearances obtained when the pruning is performed shall be at the full discretion of the person that owns, controls, operates, or maintains any electrical transmission or distribution line, but shall be no less than what is required in Section 4293. This section shall apply to both high fire threat districts, as determined by the California Public Utilities Commission pursuant to its rulemaking authority, and to state responsibility areas.

(b) Subdivision (a) does not exempt a person who owns, controls, operates, or maintains an electrical transmission or distribution line from liability for damages for the removal of vegetation that is not covered by an easement granted to the person for the electrical transmission or distribution line.

(c) On and after January 1, 2025, an electrical corporation, as defined in Section 218 of the Public Utilities Code, shall provide notice to landowners and an opportunity to be heard as required by subdivision (a) in compliance with Section 8386.7 of the Public Utilities Code. This subdivision shall become inoperative on January 1, 2026.

~~SECTION 1.~~

SEC. 2. Section 4295.6 is added to the Public Resources Code, to read:

4295.6. (a) Notwithstanding any other ~~law, including Section 4295,~~ *state or local law or regulation that would impose liability for trespass or damages for felling, cutting, or trimming trees or vegetation as described in this section,* an electrical corporation who owns, controls, operates, or maintains an electrical transmission or distribution line may traverse land as necessary, regardless of land ownership or express permission to traverse land from the landowner, after providing notice and an opportunity to be heard to the landowner, to fell, cut, or trim trees to maintain clearances pursuant to Section 4293, or, if applicable, Rule 35 of the Public Utilities Commission's General Order 95, and to abate, by felling, cutting, or trimming, any hazardous, dead, rotten, diseased, leaning, or structurally defective live trees. The felling, cutting, and trimming of these trees, and the clearances obtained when felling, cutting, or trimming of trees, shall be ~~at the full discretion of~~ *performed by* the electrical corporation that owns, controls, operates, or maintains an electrical transmission or distribution line, but shall not be less than what is required in Section 4293, and, if applicable, Rule 35 of the Public Utilities Commission's General Order 95. This section shall apply to both high fire threat districts, as determined by the Public Utilities Commission pursuant to its rulemaking authority, and to state responsibility areas.

(b) (1) Trees that are felled, cut, or trimmed pursuant to this section on property where the electrical corporation does not have existing rights or the express permission to do so from the

landowner shall remain on the property of the landowner unless, in advance of a date specified in the landowner notice requirement developed pursuant to Section 8386.7 of the Public Utilities Code, the landowner makes a timely request to the electrical corporation to perform a treatment of the wood, including, but not limited to, onsite ~~chipping,~~ *chipping* or ~~to remove~~ *the removal of* the wood from the property.

(2) In response to a timely request from a landowner and at no cost to the landowner, the electrical corporation shall treat the wood ~~as~~ *in the manner* requested, unless the wood is not safely accessible by its vehicles and equipment or other regulations would otherwise prohibit the treatment.

(3) Except where the landowner has requested the woody material to be kept intact, when operating within 150 feet of a structure, public road, or other infrastructure, woody materials trimmed, cut, or felled pursuant to this section shall be treated to achieve a maximum postactivity depth of nine inches. Nothing in this paragraph shall supersede Section 4291. For purposes of this paragraph, the following definitions apply:

(A) "Infrastructure" includes electrical distribution and transmission facilities, water reservoirs or other conveyances, wastewater facilities or conveyances, communication and data transmission and distribution facilities, or other critical assets or infrastructure at risk.

(B) "Structure" includes buildings that are designed for human occupancy, or garages, barns, stables, and structures used to enclose fuel tanks.

(c) All actions pursuant to this section that are undertaken by an electrical corporation who owns, controls, operates, or maintains an electrical transmission or distribution line shall be done in compliance with the California Coastal Act of 1976 (Division 20 (commencing with Section 30000)) and the forest practice rules and regulations adopted by the board pursuant to the Z'berg-Nejedly Forest Practice Act of 1973 (Chapter 8 (commencing with Section 4511)).

(d) Electrical cooperatives, as defined in Section 2776 of the Public Utilities Code, are exempt from this section.

~~(c)~~

(e) This section shall remain in effect only until January 1, 2026, and as of that date is repealed, unless a later enacted statute that is enacted before January 1, 2026, deletes or extends that date.

~~SEC. 2.~~

SEC. 3. Section 8386.7 is added to the Public Utilities Code, to read:

8386.7. (a) On or before January 1, 2025, the commission shall develop, through a public process, standardized content *and methods of delivery* for a letter, door hanger, or other means of notification *reasonably expected to make the landowner aware of the entry and work to be performed* that the electrical corporation who owns, controls, operates, or maintains an electrical transmission or distribution line shall use to satisfy the landowner notice requirement described in ~~Section~~ *Sections 4295.5 and* 4295.6 of the Public Resources Code when *pruning, maintaining clearances, abating,* felling, cutting, or trimming trees on property where the electrical corporation does not have existing rights or the express permission to do so. The content shall include a description of the notice that the electrical corporation who owns, controls, operates, or maintains an electrical transmission or distribution line must provide the landowner to exercise the opportunity to be heard, established in Section 4295.6 of the Public Resources Code, related to the proposed *pruning, maintaining clearances, abating,* felling, cutting, or trimming of trees on property where the electrical corporation does not have existing rights or the express permission to traverse land from the landowner. *The content shall include a definition of a landowner's opportunity to be heard and provide the timeline for which a timely request must be made by a landowner pursuant to paragraph (2) of subdivision (b) of Section 4295.6 of the Public Resources Code.*

(b) Before the development of the standardized ~~content,~~ *content pursuant to subdivision (a),* the electrical corporation who owns, controls, operates, or maintains an electrical transmission or distribution line shall make a good faith effort to communicate the processes established in Section 4295.6 of the Public Resources Code to a landowner before felling, cutting, or trimming trees on property where the electrical corporation does not have existing rights or the express permission to do so from the landowner.

(c) This section shall remain in effect only until January 1, 2026, and as of that date is repealed, unless a later enacted statute that is enacted before January 1, 2026, deletes or extends that date.

~~SEC. 3.~~

SEC. 4. This act is an urgency statute necessary for the immediate preservation of the public peace, health, or safety within the meaning of Article IV of the California Constitution and shall go into immediate effect. The facts constituting the necessity are:

In order to establish clear forest management practices for the prevention of, and protection against, wildfires, it is necessary that this act take effect immediately.

O

525 San Anselmo Avenue
San Anselmo, CA 94960

Town of San Anselmo

Staff Report

TO: Town Council | 6/28/2022 | **Item #:** 1.10

FROM:
Megan H. Acevedo, Town Attorney

SUBJECT:
Consider Adoption of Resolution to Allow for Virtual Town Council Meetings in Compliance with AB 361.

RECOMMENDATION

That the Town Council adopt the attached resolution making findings pursuant to AB 361 to support continued use of teleconferencing/videoconferencing to hold public meetings of the Town Council and Town legislative bodies during the continuing state of emergency proclaimed by Governor Newsom on March 4, 2020. (Attachment 1).

BACKGROUND

On March 4, 2020, Governor Newsom declared a state of emergency pursuant to Government Code section 8625 due to COVID-19. Recognizing the need to promote social distancing while allowing local legislative bodies to continue operating during the emergency, Governor Newsom signed Executive Orders N-25-20, N-29 -20, and N-08-21, which suspended provisions of the Brown Act. Those Orders permitted legislative bodies to hold virtual meetings; however, the relevant provisions expired on September 30, 2021.

On September 16, 2021, Governor Newsom signed AB 361, which extends the authority of public agencies to conduct meetings by teleconference, including video conference, during State-declared emergencies. Specifically, the bill provides that a legislative body may hold virtual meetings where there is a proclaimed state of emergency and state or local officials have imposed or recommended measures to promote social distancing. (Cal. Gov. Code § 54953(e)(1)(A)).

On September 22, 2021, the Marin County Director of Health & Human Services, Benita McLarin, sent a letter to the Marin County Board of Supervisors recommending continued social distancing for local government meetings.

> Local government meetings are indoor meetings that are sometimes crowded, involve many different and unfamiliar households, and can last many hours. Given those circumstances, I recommend a continued emphasis on social distancing measures as much as possible to make public meetings as safe as possible. These measures can include using video/teleconferencing when it meets community needs and spacing at in-person meetings so that individuals from different households are not sitting next to each other.

Ms. McLarin has confirmed that these recommendations remain in place, including in her letter to the Board on June 21, 2022.

On November 26, 2021, the World Health Organization (WHO) classified a new variant, B.1.1.529, as a Variant of Concern and named it Omicron and on November 30, 2021, the United States also classified it as a Variant of Concern. On December 1, 2021, the California and San Francisco Departments of Public Health confirmed that a recent case of COVID-19 in California was caused by the Omicron variant. Omicron is more contagious than previous variants and spread rapidly. On January 10, 2022, the U.S. reported 1,400,000 positive COVID cases in a single day. On February 22, 2022, the World Health Organization identified a second Omicron variant as a variant of concern and case rates have risen as a result of its spread.

On October 12, 2021, November 9, 2021, December 14, 2021, January 11, 2022, February 8, 2022, March 8, 2022, and April 12, 2022, May 10, 2022, and June 14, 2022 the Town Council adopted resolutions with the requisite findings that the state of emergency is in effect, that measures to promote social distancing are still being recommended by local officials, and that the state of emergency directly impacts the ability of the public and the members of the Town Council to meet safely indoors in person.

On March 22, 2022, the Council voted for the month of April to have the option for Council to either meet in the Council Chambers or virtually and for the public to only meet virtually. Given the unpredictable spread of new COVID-19 variants and the nature of public meetings to bring different households into an enclosed room for extended periods of time, the Town Council indicated that remote meetings could be necessary beyond April and the Council has not requested that the issue return for their consideration. The Town Council also directed that, going forward, Town legislative bodies may make an independent determination about their use of the virtual meeting format. However, the Council limited the Committee and Commissions' options to only those that allow for virtual public participation.

Council requested that staff be asked how they feel about attending in person meetings and staff indicated that they would prefer to be allowed to choose to be in person or virtual, just like the Council.

Finally, the Council asked staff to verify that Council members and Committee and Commission members who plan to participate in person at public meetings be vaccinated. Given the proof-of-vaccination requirement imposed by the Council, allowing virtual participation by Council and Committee members will ensure that all members can take part in the meetings, regardless of vaccination status.

The following San Anselmo committees meet monthly and have made the determination that they would like to continue meetings in the following format:

Arts Commission, Economic Development Committee and Planning Commission have decided to stay virtual for now.

Historical Commission, Open Space Committee and Parks and Recreation Commission have decided to hold hybrid meetings.

Climate Action Commission, Library Advisory Board, Racial Equity Ad Hoc Committee have not made a formal decision as of this report.

FISCAL IMPACT

There would be no direct fiscal impact to the Town to approve this item.

CEQA AND CLIMATE ACTION PLAN CONSISTENCY

Adopting a resolution to establish the format for public meetings during a state of emergency is not a “project” under the California Environmental Quality Act (CEQA), because it does not involve an activity that has the potential to cause a direct or reasonably foreseeable indirect physical change in the environment. (Cal. Pub. Res. Code § 21065).

CONCLUSION

Staff respectfully requests that the Council adopt the attached resolution to allow for continued use of video/teleconferencing for public meetings.

RESOLUTION NO.

RESOLUTION REGARDING TELECONFERENCE AND VIDEOCONFERENCE MEETINGS DURING THE COVID-19 STATE OF EMERGENCY

WHEREAS, on March 4, 2020, Governor Newsom proclaimed pursuant to his authority under the California Emergency Services Act, California Government Code Section 8625, that a state of emergency exists due to a novel coronavirus (COVID- 19); and

WHEREAS, on June 4, 2021, in lifting many restrictions that the State previously imposed due to COVID-19, the Governor indicated that those changes did not end the ongoing, proclaimed state of emergency; and

WHEREAS, as of the date of this Resolution, neither the Governor nor the Legislature have exercised their respective powers pursuant to California Government Code section 8629 to lift the state of emergency either by proclamation or by concurrent resolution in the state Legislature; and

WHEREAS, the continued local rates of transmission of the virus and variants causing COVID-19 are such that on September 22, 2021, the Marin County Director of Health & Human Services recommended that local government entities continue to emphasize social distancing in order to minimize the potential spread of COVID-19 during indoor, public meetings; and

WHEREAS, the County Director of Health & Human Services' has confirmed her recommendation related to public meetings, including in a letter to the Board of Directors on June 21, 2022; and

WHEREAS, on November 26, 2021, the World Health Organization (WHO) classified a new variant, B.1.1.529, as a Variant of Concern and named it Omicron and on December 1, 2021, the California and San Francisco Departments of Public Health confirmed that the first case of COVID-19 in California caused by the Omicron variant; and

WHEREAS, Omicron is a more contagious variant and by January 10, 2022, the U.S. reported 1,400,000 positive COVID-19 cases on a single day; and

WHEREAS, on February 22, 2022, the WHO labeled a second version of Omicron to be a new variant of concern; and

WHEREAS, in light of the County's recommendation and the current COVID-19 variant of concern, the Town Council desires to continue to have the flexibility, for itself and for all other Town legislative bodies, to meet by teleconference and/or videoconference; and

WHEREAS, adopting a resolution to establish the format for public meetings during a state of emergency is not a "project" under the California Environmental Quality Act (CEQA),

because it does not involve an activity that has the potential to cause a direct or reasonably foreseeable indirect physical change in the environment. (Cal. Pub. Res. Code § 21065).

NOW, THEREFORE, BE IT RESOLVED THAT:

1. The above recitals are hereby incorporated as if fully set forth herein.
2. There is an ongoing proclaimed state of emergency relating to the novel coronavirus causing the disease known as COVID-19.
3. The state of emergency continues to directly impact the ability of Town Council and standing committees and commissions to meet safely in person.
4. Local health officials, including the County Director of Health & Human Services continue to recommend social distancing during public meetings, including the use of tele/video conferencing.
5. Holding meetings with all attendees participating in person would present imminent risks to the health or safety of attendees, such that the conditions continue to exist pursuant to Government Code Section 54953(e)(3) to allow the Town of San Anselmo Town Council and Town legislative bodies to use teleconferencing to hold public meetings in accordance with Government Code section 54953(e)(2) to ensure members of the public have continued access to safely observe and participate in local government meetings.

PASSED AND ADOPTED at the regular meeting of the Town Council of the Town of San Anselmo held on the 28th day of June, 2022, by the following vote:

AYES
NOES:
ABSENT:

_____
Alexis Fineman, Mayor

Attest:

_____
Carla Kacmar, Town Clerk

525 San Anselmo Avenue
San Anselmo, CA 94960

Town of San Anselmo

Staff Report

TO: Town Council 6/28/2022 **Item #:** 2.

FROM:
Robyn Clifford, Payroll and Benefits Technician

SUBJECT:
Appoint applicants to the Planning Commission

RECOMMENDATION

Appoint applicants to the Planning Commission

BACKGROUND

The Planning Commission has a membership of seven (7) seats. There are two seats available. Kim Pipkin, Mark M. Haddix and Peter Thomas Strauss have applied. They have been interviewed and their applications are attached to this report.

FISCAL IMPACT

There would be no direct fiscal impact to the Town to approve this item.

CEQA AND CLIMATE ACTION PLAN CONSISTENCY

The proposed decision is exempt from the California Environmental Quality Act (CEQA), under the “common sense” exemption, because it can be seen with certainty that there is no possibility that the activity in question may have a significant negative effect on the environment. (Cal Code Regs. tit. 14, § 15061).

Attachment 1 - Board and Commission Status Report 06.14.2022
Attachment 2 - Kim Pipkin
Attachment 3 - Mark M Haddix
Attachment 4 - Peter Thomas Strauss

Board, Committee, Commission *(total seats)*	**Seats Expiring/ Vacant**	**Applicants**	**Term (Yrs)[1]**	**Date of Interview**
Arts Commission *9 seats + youth* *Dannielle Mauk*	2		3	
Bicycle and Pedestrian Committee *7 seats* *Sean Condry*			4	
Board of Review *5 seats* *Jeff Zuba*	2		6	
Capital Programs Monitoring Committee *7 seats* *Sean Condry*	3		4	
Economic Development Committee *7 seats* *Heidi Scoble*			3	
Financial Advisory Committee *5 seats* *Jeff Zuba* *(Temporary Expansion to 6 seats)*	1	Kfir Lindheim	3	
Flood Committee *7 seats* *Sean Condry*	2		4	
Historical Commission *11 seats+ youth* *Linda Kenton*			4	
Library Advisory Board *7 seats+ youth* *Linda Kenton*			4	
Library Tax Oversight Committee *5 seats* *Linda Kenton*			3	
Marin Commission On Aging *1 seat*			3	
Mosquito Abatement District *1 seat*			2-4	
Open Space Committee *11 seats + youth* *Heidi Scoble*			4	
Parks & Recreation Commission *7 seats + youth* *Dannielle Mauk*	1		4	
Planning Commission *7 seats* *Heidi Scoble*	2	Kim Pipkin Peter Thomas Strauss Mark M Haddix	4	
Racial Equity Ad Hoc Committee			1	
Climate Action Commission *7 seats+ youth* *Heidi Scoble*	1	Christiana Conser	3	
Ross Valley Paramedic Authority *1 seat*			4	
Tax Equity Board *3 seats* *Jeff Zuba*	1		3	

* Incumbent

[1] Per Commission Guidelines, differing term lengths may be allowed to accomplish a staggering of the appointment schedule.

Boards & Committee Applications - Submission #1455

Date Submitted: 2/23/2022

TOWN OF SAN ANSELMO

APPLICATION FOR APPOINTMENT TO A SAN ANSELMO BOARD/COMMISSION/COMMITTEE

To: San Anselmo Town Council

Date*

2/23/2022

I wish to apply for an appointment to a term/balance*

Planning Commission

Name*

Kim Pipkin

Home Address*

5 Jordan Avenue

Occupation*

Commercial Real Estate Broker & Business Consultant

Employer's Address

Not Applicable

Home Phone*

4157555715

Work Phone

Cell Phone

415.755.5715

E-Mail*

kimpipkin@comcast.net

Number of years as resident of San Anselmo*

22

Number of years as a resident in Marin*

24

Education Level Achieved*

Graduate Degree (Major)

Name and phone numbers of three San Anselmo residents who can be contacted for referral information about me:

1.) Name*	1.) Phone*
Tiffany McElroy	(646) 247-4512

2.) Name*	2.) Phone*
Steve Franklin	(415) 793-5062

3.) Name*	3.) Phone*
Hadley Dettmer	(415) 847-6189

I would be able to regularly attend the meetings of this Board/Commission/Committee.*

- (●) YES
- ( ) NO

I would be available to attend additional meetings when they are necessary.*

- (●) YES
- ( ) NO

I am familiar with the responsibilities and functions of this Board/Commission/Committee.*

- (●) YES
- ( ) NO

I have attended meetings of the Board/Commission/Committee as a member of the public.*

- (●) YES
- ( ) NO

List briefly, previous experience serving the public office, and/or civic commissions,boards, or committees.*

I served as a Planning Commissioner completing the term vacated by a previous Commissioner. In addition to campaigning for a Town Council seat, I was a member of the Economic Development Committee. Often, I volunteered on behalf of former Mayor, Kay Coleman and the Recreation Department for various Town events including:

Overseeing the Snow Cone Booth at the Country Fair Day
Running the Pie Booth at the Country Fair Day
Volunteering for the annual Halloween SPOOKtacular
Volunteering for the Annual Spring Egg Hunt

Reasons for this appointment.*

There is a vacancy on the Planning Commission.

What are your qualifications for this appointment.*

No single individual reflects the diversity, interests, and needs of the Town of San Anselmo. Nonetheless, I am confident that my professional background, previous experience on the Planning Commission and passion for San Anselmo would contribute greatly to our Town and the Planning Commission.
Benefits I bring to the Planning Commission follow:

A demonstrated commitment to community service as evidence by my volunteer participation and 22-year residence in San Anselmo.

Strong interpersonal and independent decision-making skills along with a willingness to learn and share.

Planning and design experience gained from attending graduate architecture school at UC Berkeley. This experience is complemented by a comprehensive understanding of land use policies.

Having a 25-year professional career in marketing and business development for notable Bay Area architecture, engineering, and construction firms. This includes current involvement in industry associations, Urban Land Institute and Commercial Real Estate Women.

Understanding the importance of protecting the public's interest and ethical behavior.

Briefly, what do you consider to be the most important, one or two current issues facing this Board/Commission/Committee?*

There are several current issues of concern in San Anselmo. These include Land use and planning, fire prevention, homelessness, traffic, and flood protection, to name a few. I believe addressing the lack of housing is one of the most important issues our Town faces.

The Association of Bay Area Government's (ABAG) Regional Housing Needs Assessment has shed light on the lack of affordable housing and set specific goals to address the issue around the Bay Area; this includes cities and towns in Marin County.

Many commercial properties suffer from long-term vacancy, are obsolete, and not generating revenue for property owners. Converting existing structures into housing could be an attractive option for investors. Potential solutions could include making amendments to the Town general plan to allow for adaptive reuse of commercial space and / or rezoning commercial districts to create development of housing. For example, the Bank of America (BoA) could become a highly desirable, mixed-use transit-oriented project. Currently, there is a small commercial building on Pine Street for sale just behind the BoA building, which is about 4700 rental square foot property. It could easily be converted into a 2–4-unit residential property with modifications making it meet code since it's in the flood zone.

I also believe that reinvigorating our downtown commercial is essential not only for our community but to shore up and increase our town finances.

I understand that I and all other applicants will be personally interviewed by the Town Council as part of the selection process for this appointment. I also understand that my application material will be a public document and available on the Town's website. Sensitive materials that you don't wish to be posted on the website should not be included with the application.*

- (●) YES
- ( ) NO

Other Boards/Commissions/Committees on which you would be interested in serving if not appointed to this seat?*

None

You may attach personal resumes or other information which you believe would be helpful to the Council in its selection process.

Choose File No file chosen

Thank you for your interest in serving the Town of San Anselmo and its citizens. For further information, please contact Carla Kacmar, at ckacmar@townofsananselmo.org or 415-258-4660.

Boards & Committee Applications - Submission #1546

Date Submitted: 4/26/2022

TOWN OF SAN ANSELMO

APPLICATION FOR APPOINTMENT TO A SAN ANSELMO BOARD/COMMISSION/COMMITTEE

To: San Anselmo Town Council

Date*

4/26/2022

I wish to apply for an appointment to a term/balance*

Planning Commission

Name*

Mark M Haddix

Home Address*

39 Tomahawk Drive San Anselmo

Occupation*

Architect

Employer's Address

Retired Self Employeed

Home Phone*

4157160550

Work Phone

4157160550

Cell Phone

415716055

E-Mail*

mark_haddix@afbcllc.com

Number of years as resident of San Anselmo*

17

Number of years as a resident in Marin*

25

Education Level Achieved*

Graduate Degree (Major)

Name and phone numbers of three San Anselmo residents who can be contacted for referral information about me:

1.) Name*	1.) Phone*
Jason Corey SE	4157401434

2.) Name*	2.) Phone*
Paige Dickow	4153850215

3.) Name*	3.) Phone*
Tack Kuntz	4153850215

I would be able to regularly attend the meetings of this Board/Commission/Committee.*

- (●) YES
- ( ) NO

I would be available to attend additional meetings when they are necessary.*

- (●) YES
- ( ) NO

I am familiar with the responsibilities and functions of this Board/Commission/Committee.*

- (●) YES
- ( ) NO

I have attended meetings of the Board/Commission/Committee as a member of the public.*

- (●) YES
- ( ) NO

List briefly, previous experience serving the public office, and/or civic commissions,boards, or committees.*

No experience with serving on public positions

Reasons for this appointment.*

After many years as an architect in the private sector in retirement I want to stay involved in improving the built environment and giving back to the community. Being an owning of a medium sized A and E firm and practicing architecture for over 30 years has provided me with ample experience and knowledge which I hope I can bring to the planning commission to help serve the residents of our community.

What are your qualifications for this appointment.*

Knowledge of the planning process through years of being an architect. 40 years of design and construction knowledge and experience. Experience with Town of San Anselmo building and planning departments and local codes and ordinances. Ability to listen and work with a team to investigate and solve issues. Being able to understand planning and zoning documents, codes and ordinances and to apply them to matters being presented to the planning commission.

Briefly, what do you consider to be the most important, one or two current issues facing this Board/Commission/Committee?*

First of all the reduction of the application of personal opinion in the planning commission processes and focusing on recommendations based on the research and interpretation of the Town's existing planning codes and ordinances. Also supporting the planning department in the current time of transition and new staff.

I understand that I and all other applicants will be personally interviewed by the Town Council as part of the selection process for this appointment. I also understand that my application material will be a public document and available on the Town's website. Sensitive materials that you don't wish to be posted on the website should not be included with the application.*

- (●) YES
- ( ) NO

Other Boards/Commissions/Committees on which you would be interested in serving if not appointed to this seat?*

Open Space Committee

You may attach personal resumes or other information which you believe would be helpful to the Council in its selection process.

Choose File No file chosen

Thank you for your interest in serving the Town of San Anselmo and its citizens. For further information, please contact Carla Kacmar, at ckacmar@townofsananselmo.org or 415-258-4660.

CURRICULUM VITAE

Mark M. Haddix

Mark Haddix, Chief Executive Officer, and founder of Advanced Forensic Building Consultation LLC has over 40 years of experience in the construction and architecture fields and has been involved in all types of commercial property, multi and single-family projects. His background and understanding of the architecture and construction fields allow him to provide a wide range of consulting related to real estate development, new construction, as well as existing buildings for building owners, private investors, institutional equity sources and attorneys. This includes due diligence analysis related to acquisition, disposition, feasibility studies, construction document review and project oversight, construction cost analysis, forensic investigation and testing, construction litigation, as well as design and construction documents for new and restoration projects.

Specialty areas of practice include litigation support and expert witness services, owner's representation, risk management, project management, detailed building investigations requiring multi-disciplinary problem solving, building enclosure and moisture intrusion investigations as well as preparation of construction documents. Mr. Haddix has been the lead principle and architect for the preparation of construction documents for the rehabilitation of numerous apartments and commercial complexes.

Mr. Haddix retired from Marx/Okubo Associates in March 2016 after 30 years of service. At Marx/Okubo Associates he held the position of Executive Vice President and Chief Technical Officer and was responsible for directing the professional and technical operations of the eight office across the county. This included the development of the construction management, forensic, litigation and repair document services. Responsible for opening and developing the company's Seattle and San Francisco offices he successfully developed and expanded the company's business associations throughout the western and northwestern United States. Since 1998 he was responsible for the operations of the San Francisco office.

Work Address:	Advanced Forensic Building Consultation LLC 39 Tomahawk Drive San Anselmo, California 94960 (415) 716-0550
Birth Date and Place:	April 28, 1956 Arvada, Colorado
Architecture Licensure:	Washington, No. 5725 1991- Active California, No. C27158 1997- Active
Education:	University of Colorado Boulder Environmental, Population, and Organismic Biology Bachelor of Arts, 1982 University of Colorado Denver Master of Architecture, 1985

CURRICULUM VITAE

Mark M. Haddix

Work Experience:

1983-85: Progressive Enterprises
Denver, Colorado
Construction Project Manager
Supervisor: Ron Maggi

1986-2016: Marx|Okubo and Associates, Ltd.

1986-87: Marx|Okubo and Associates, Ltd.
Denver, Colorado
Staff Architect and Construction Manager

1987-92: Marx|Okubo and Associates, Ltd.
Seattle, Washington
Regional Manager and Vice-President

1993-96: Marx|Okubo and Associates, Ltd.
Seattle, Washington
Principal, Executive Vice-President and Board of Directors

1996-98: Marx|Okubo and Associates, Ltd.
Costa Mesa, California
Principal, Executive Vice-President,
Western Regional Manager and Board of Directors

1998- 08: Marx|Okubo and Associates, Inc.
San Francisco, California
Principal, Executive Vice-President,
Western Regional Manager, Board of Directors and ESOP Trustee

2008- 2016: Marx|Okubo and Associates, Inc.
San Francisco, California
Principal, Executive Vice-President,
Chief Technical Officer, Board of Directors

2016- Present: Advanced Forensic Building Consultation LLC.
San Anselmo, California
Chief Executive Officer

CURRICULUM VITAE

Mark M. Haddix

Professional Memberships: American Institute of Architects Emeritus
1991-present

National Roofing Contractors Association (NRCA)
1996-2016

American Society of Testing and Materials (ASTM)
1996-2016
Chaired subcommittee for publication of ASTM Guidelines for Property Condition Assessment (1996-99)

Construction Specifications Institute
1996-2016

American Concrete Institute (ACI)
2002-2016

IIBEC
International Association of Building Envelope Consultants
2012-present

AAMA
American Architectural Manufactures Association
2013-2016

AICS
American Institute of Steel Construction
2007-2016

APA
The Engineered Wood Association
2009-2016

ASCE A.M.A.S.C.E.
American Society of Civil Engineers
2004-present

Other Certifications: National Council of Architectural Registration Board (NCARB)
Certification 1988
Contractor's license (Class B construction supervisor)
Aurora, Colorado 1986-89

CURRICULUM VITAE

Mark M. Haddix

Publications:

Structural Observation, Special Inspection, or Building Inspection: Where Does Responsibility for Quality Assurance Lie?
J. A. Villamil and M. M. Haddix
Published in the proceedings for the ASCE Structures Congress.

Pre-Manufactured Lumber Moisture Related Deterioration: Forensic Case Studies
J. A. Villamil and M. M. Haddix
Published in the proceedings for the ASCE Structures Congress.

Project Experience:

Number of projects for past 40 years

Multi-family Residential

Includes apartments and senior/teacher housing projects**.**
Low, mid, and high-rise projects.

- Property Condition Assessments-144
- Preconstruction Project Review and Construction Oversight-75
- Owner Representation and Project Management-13
- Property Investigations-43
- Remedial Architectural Services-67

Mixed Use

Includes office/residential/retail projects:

- Property Condition Assessments-8
- Preconstruction Project Review and Construction Oversight-4
- Owner Representation and Project Management-1
- Property Investigations-3

Office

Includes low, mid, and high-rise projects:

- Property Condition Assessments-127
- Preconstruction Project Review and Construction Oversight-21
- Owner Representation and Project Management-13
- Property Investigations-18
- Remedial Architectural Services-14

Retail

- Property Condition Assessments-32
- Preconstruction Project Review and Construction Oversight-13
- Owner Representation and Project Management-15
- Property Investigations-9

CURRICULUM VITAE

Mark M. Haddix

Hospitality

- Property Condition Assessments-17
- Preconstruction Project Review and Construction Oversight-12
- Property Investigations-1

Senior Living and Care Facilities

Includes low, mid, and high-rise projects:

- Property Condition Assessments-52
- Preconstruction Project Review and Construction Oversight-5
- Owner Representation and Project Management-7
- Property Investigations-7
- Remedial Architectural Services-7

Industrial/Warehouse/R&D

- Property Condition Assessments-96
- Preconstruction Project Review and Construction Oversight-7
- Owner Representation and Project Management-16
- Property Investigations-7
- Remedial Architectural Services-19

Specialty Projects

Includes ski resorts, airports, university, self storage, and single-family residences.

- Property Condition Assessments-6
- Preconstruction Project Review and Construction Oversight-1
- Property Investigations-3
- Remedial Architectural Services-3

Litigation Experience:

Squire Sanders (US) LLP –Lead Counsel Diane Gibson

Boulders Apartments

- 2009-2014 Settled in Mediation
- Construction defect case.
- Sonoma County Superior Court Case No. SCV-246738
- Litigation support for plaintiff's counsel.
- Deposition Testimony-Person Most Knowledgeable.
- Owners Representative for post litigation repairs.

CURRICULUM VITAE

Mark M. Haddix

Overlook Apartments
- 2010-2014 Settled in Mediation
- Construction defect case.
- Sonoma County Superior Court Case No. SCV-247545.
- Litigation support for plaintiff's counsel.
- Deposition Testimony-Person Most Knowledgeable
- Owners Representative for post litigation repairs.
- Architect of Record for post litigation repairs.

Courtyards Apartments
- 2009-2014 Settled in Mediation/ Trail
- Construction defect case.
- Alameda County Superior Court Case No. RG10-496973.
- Litigation support for plaintiff's counsel.
- Deposition Testimony-Person Most Knowledgeable.
- Trail Testimony- Person Most Knowledgeable.
- Owners Representative for post litigation repairs.

Cooley LLP –Lead Counsel Patrick Gunn

Church Street Apartments
- 2012-2015 Settled in Mediation
- Construction defect case.
- San Francisco County Superior Court Case No. CGC-12-519574
- Expert Witness and Litigation support for plaintiff's counsel.
- Architect of Record for post litigation repairs.

Arroyo Point Apartments
- 2012-2016 Settled in Mediation
- Construction defect case.
- Sonoma County Superior Court Case No. SCV-254062.
- Expert Witness and Litigation support for plaintiff's counsel.
- Architect of Record for post litigation repairs.

Danville Senior Apartments
- 2013-2015 Settled in Mediation
- Construction defect case.
- Contra Costa County Superior Court Case No. C13-00806
- Expert Witness and Litigation support for plaintiff's counsel.

CURRICULUM VITAE

Mark M. Haddix

Trestle Glen Apartments
- 2014-2016 Settled in Mediation
- Construction defect case.
- San Mateo County Superior Court Case No. CIV-523098.
- Expert Witness and Litigation support for plaintiff's counsel.
- Architect of Record for post litigation repairs.

Mandela Gateway Apartments
- 2012-2018 Settled in Mediation
- Construction defect case.
- Alameda County Superior Court
- Expert Witness and Litigation support for plaintiff's counsel.
- Architect of Record for post litigation repairs.

Walkup, Melodia, Kelly & Schoenberger
Lead Counsel Richard H. Schoenberger

Library Gardens Apartments
- 2015-2017 Settled
- Balcony Collapse
- Alameda County Superior Court
- Litigation support for plaintiff's counsel.

Allen Matkins Leck Gamble Mallory & Natsis LLP
Lead Counsel Timothy M. Hutter Esq.

Clearview Business Park Building F
- 2017-2018 Settled in Mediation
- Construction Defect Case
- San Mateo County Superior Court
- Expert Witness and Litigation support for plaintiff's counsel.
- Architect of Record for post litigation repairs.

Sheppard, Mullin, Richter & Hampton LLP
Lead Counsel Erinn M. Contreras

812 Green Street Residence Litigation
- 2018-2019 Settled in Mediation
- Construction Defect Case
- San Francisco County Superior Court
- Expert Witness and Litigation support for plaintiff's counsel.

CURRICULUM VITAE

Mark M. Haddix

Educational Presentations:

- Stucco-The Tip of The Iceberg 2016
- Understanding Accessibility Codes and Laws in Design and Construction 2014
- Defective Construction-Materials and Systems 2013
- Advanced Design and Specifications of Window and Related Flashings for Wood Frame Construction. 2012
- The Ground Up. The Top Down and Everywhere In Between-Multifamily Design and Construction Risk Management and Pre-Construction Review 2011
- An Ounce of Prevention and Other Proverbs. Property Condition Assessments and Product and System Issues 2010
- Analysis of Distressed Real Estate 2010
- Limiting Post Construction Risk Due to Unanticipated Building Performance Issues 2010
- The Dirty Dozen-Negotiating the Client's Contract Requirements 2008
- Project Management-Meeting Project Goals 2008
- Wood Framed Building Weatherization and Window Installation 2007
- Brookwood Valley Apartments- A Case Study of And Apartment Complex Rehabilitation 2005
- San Padro Commons-A Case Study of An In-depth Building Envelope Investigation 2004
- Pitfalls ff Residential Asset Types 2004
- Seismic Considerations in Real Estate 2002
- Seismic and Construction Loan Seminar 2001
- Seismic Evaluation of Multi-Building Portfolios 2001

Continuing Education:

- California Disabled Access Education Accessibility Course for California Architects, Certified Training Institute 2011, 2013, 2015, 2017 and 2019
- Advanced Waterproofing, Certified Training Institute, 2017
- Construction Management Training, Certified Training Institute, 2017 and 2019
- Façade Access Standards, Applied Technology Services, 2016
- Preservative-Treated Wood: Use and Specification, Wood Products Council, 05/13/2015
- Façade Metal Corrosion and Restoration, Stuart Dean Services and Western Waterproofing, 2014
- Building Enduring Wood Structures, Wood Products Council 07/01/2014
- Below Grade and Plaza Deck Waterproofing, Cetco, 03/07/2014
- CBC Significant Changes, CALBO, 2014
- Business Forum: Employee Engagement, SEAONC, 2014
- Architecture and Conscious Capitalism and The Future of Business 06/20/2013
- Where to Go Once Your Firm Has Arrived, AIA National Convention, 06/19/2013
- Design of Plaza Deck Waterproofing, Allana Buick & Bers, 11/30/2012
- The Ten Most Common Areas of Design Professional Exposure, Donovan Hatem LLP, 03/19/2012
- Bad Contracts = Bad Claims, How to Minimize Liability in A Litigious Environment, Donovan Hatem LLP 03/19/12
- Building Envelope Design with Vaproshield Weather Barriers, Techmarx Group, 05/12/2010

CURRICULUM VITAE

Mark M. Haddix

- Global Influences and The Transformation Of San Francisco: Urban High-Rise, AIA, 5/01/2009
- The Value of Exterior Insulation and The Positive Impact on Overall Building, AIA,05/01/2009
- The Spy Who Sued Me: Gathering Claims Intelligence in A World of Chaos, AIA, 05/01/2009
- The Evolution of Green Affordable, Multi-Family Housing, AIA, 04/30/2009
- Expanding the Boundary of Sustainable Design, AIA, 04/30/2009
- True Sustainability--The Region, City, Site, and Building: Acquiring Knowledge, 04/30/2009
- Natural Ventilation in Buildings: Optimizing the Success, AIA, 05/16/2008
- Cracked! Problems and Solutions with Concrete and Masonry, AIA, 05/15/2008
- Transferring Ownership and Leadership Effectively, AIA, 05/15/2008
- Transferring Ownership, a Step-By-Step Process with Case Studies, AIA, 05/15/2008
- Construction Outlook: Implications for Architecture Firms, AIA, 05/15/2008
- High Performance Building Enclosures, AIA, 05/14/2008
- Architects in Court: A Mock Trial, AIA, 05/14/2008
- Choices of Air Barriers for The Building Enclosures, Dupont Company 03/31/2008
- Contract Administration: Where Construction, Begins and Lawsuits Are Born, Lee & McShane, PC, 3/31/2008
- Investor and Fiduciary Assessment of Green Building, AIA, 02/20/2008
- Everything A Construction Player Should Know About Insurance, Lorman Business Center, Inc. 02/13/2008
- Aggressive Condominium Risk Management, AIA, 06/10/2006
- Preparing Your Firm for the New Talent War, AIA, 06/10/2006
- Financial Analysis and Building Shareholder Value, AIA, 06/09/2006
- Design Earthquake-Resistant Houses and Other Low-Rise Buildings, AIA, 06/09/2006
- Inside and Outside, AIA, 06/08/2006
- Applying the IBC: Occupancy and Types of Construction, AIA, 06/07/2006
- Subsurface Conditions, National Council of Architectural Registration, 09/30/2005
- Building Envelope, National Council of Architectural Registration, 09/30/2005
- A/E/C Industry Trends, Webcast Resources, 08/31/2005
- Contract Review & Revisions: Advanced Topics, Xl Groups Design Professional Unit, 08/31/2003
- Contract Review and Revision, XI Groups Design Professional Unit 03/31/2003
- Understanding Key Spec Criteria for Walls/Ceilings/Floors, Architectural Record/McGraw-Hill Construction, 12/31/2001
- Gypsum Floor Underlayment's are Stronger Than Ever, Architectural Record/McGraw-Hill Construction, 12/31/2001
- Vinyl by Design: Achieving A Successful Building Envelope, Architectural Record/McGraw-Hill Construction 12/31/2001
- Specification Guide for Exterior Wall Sheathings, Architectural Record/McGraw-Hill Construction 11/30/2001
- The Next Generation, Architectural Record/McGraw-Hill Construction 11/30/2001 L
- ATC-20 Post Earthquake Safety Evaluation of Building, SEONC, 06/03/2001
- Entering A Strategic Alliance Could Be Your Best Decision, AIA, 05/18/2001

CURRICULUM VITAE

Mark M. Haddix

- Thin Cladding Systems, AIA, 05/18/2001
- The Fair Housing Amendments Act Accessibility Guidelines, AIA, 05/18/2001
- Mentoring to Refresh Practice and Feed Initiative, AIA, 05/17/2001
- Procedures for Post-Earthquake Safety Evaluations, ATC-20 Training Disaster Emergency Services Committee, Structural Engineers Association of Northern California, 6/14/2001
- Making Sense of Single Ply Roofing, Architectural Record/McGraw-Hill Construction, 12/31/2000
- Crossing to The Other Side Safely, Architectural Record/McGraw-Hill Construction 12/31/2000
- Mastering the Master Bathroom, Architectural Record/McGraw-Hill Construction, 12/31/2000
- Analyzing Fire Risks Building by Building, Architectural Record/McGraw-Hill Construction, 12/31/2000
- Creating Safe & Appealing Public Stairs, Architectural Record/McGraw-Hill Construction, 12/31/2000
- Sleuthing Out Building Failures, Architectural Record/McGraw-Hill Construction, 11/30/2000
- Designing with Structural Fabrics, Architectural Record/McGraw-Hill Construction, 11/30/2000
- In-floor Wire & Cable Management, Architectural Record/McGraw-Hill Construction, 11/30/2000
- Seismic Systems That Stand Up to Nature, Architectural Record/McGraw-Hill Construction, 11/30/2000
- Structural Condition Assessment of Existing Structures, SEONC, 05/08/1999
- Building Envelope: Solutions, Simpson Gumpertz & Heger, Inc, 03/31/1999
- Buildings at Risk: Seismic Design, AIA, 12/31/1998
- Lowering the Risks of Reroofing, Architectural Record/McGraw-Hill Construction, 11/30/1998
- Technologies, Architectural Record/McGraw-Hill Construction, 11/30/1998
- Safer More Attractive Staircases, Architectural Record/McGraw-Hill Construction, 11/30/1998
- Living and Working Within the Code, Architectural Record/McGraw-Hill Construction 11/30/1998
- Calculating Carbon Footprint, Architectural Record/McGraw-Hill Construction 11/30/1998
- Restoring a Nebraska Landmark, Architectural Record/McGraw-Hill Construction 11/30/1998
- Fundamentals of Metal Roofing, Architectural Record/McGraw-Hill Construction 08/31/1998
- High Performance from Start to Finish, Architectural Record/McGraw-Hill Construction, 08/31/1998
- Designing and Engineering the Future, APA Engineered Wood Association, 08/31/1998
- Evaluating Hidden Site Conditions, Architectural Record/McGraw-Hill Construction, 08/31/1998
- Specifying Wood Windows/Skylights/And Doors: Beyond Aesthetic, Architectural Record/McGraw-Hill Construction, 08/31/1998

CURRICULUM VITAE

Mark M. Haddix

- The Nature of Green Architecture, Architectural Record/McGraw-Hill Construction, 07/31/1998
- Designing for Security, Architectural Record/McGraw-Hill Construction, 05/31/1998
- Architectural Materials Conservation/Exterior, AIA, 05/17/1998
- Architect's Office: A Center for Community Activity, AIA, 05/17/1998
- The Alchemy of a New Material, Architectural Record/McGraw-Hill Construction, 04/30/1998
- Liability I.Q., Xl Groups Design Professional Unit, 09/30/1997
- International Building Code, University of Washington, Fall 1989
- Advanced Zoning, University of Washington, Fall 1987

Boards & Committee Applications - Submission #1476

Date Submitted: 3/5/2022

TOWN OF SAN ANSELMO

APPLICATION FOR APPOINTMENT TO A SAN ANSELMO BOARD/COMMISSION/COMMITTEE

To: San Anselmo Town Council

Date*

3/5/2022

I wish to apply for an appointment to a term/balance*

Planning Commission

Name*

Peter Thomas Strauss

Home Address*

128 Hilldale Dr.

Occupation*

Architect

Employer's Address

128 Hilldale Dr.

Home Phone*

7203087651

Work Phone

Cell Phone

7203087651

E-Mail*

ptstrauss@gmail.com

Number of years as resident of San Anselmo*

9

Number of years as a resident in Marin*

I grew up in Marin (and 4th generation San Anselmo), but left for college; I have been back in Marin 12 years.

Education Level Achieved*

Graduate Degree (Major)

Name and phone numbers of three San Anselmo residents who can be contacted for referral information about me:

1.) Name*	1.) Phone*
Jordan Weill	4156861230

2.) Name*	2.) Phone*
Ryan Wood	4152978917

3.) Name*	3.) Phone*
Dave Souten	4154542066

I would be able to regularly attend the meetings of this Board/Commission/Committee.*

- (●) YES
- ( ) NO

I would be available to attend additional meetings when they are necessary.*

- (●) YES
- ( ) NO

I am familiar with the responsibilities and functions of this Board/Commission/Committee.*

- (●) YES
- ( ) NO

I have attended meetings of the Board/Commission/Committee as a member of the public.*

- (●) YES
- ( ) NO

List briefly, previous experience serving the public office, and/or civic commissions,boards, or committees.*

I do not have experience serving in a public office or committee, but I am excited to start! As an architect, I have experience presenting to planning commissions and working with planning departments (mostly in San Francisco). Within my professional practice I have has experience serving on task forces or review boards to help lead special projects, or evaluate best practices.

Reasons for this appointment.*

I have been interested in getting involved in our community for quite a while, but haven't made the time. I am looking forward to getting involved now, either with the Planning Commission or with another commission (although preferably the planning commission).

What are your qualifications for this appointment.*

I am familiar with how planning codes and planning commissions function from my experience as an architect working with the commissions to address concerns and balance project sponsor needs with community needs and planning regulations. I am able to accurately interpret and visualize project proposals from submitted documents.

Briefly, what do you consider to be the most important, one or two current issues facing this Board/Commission/Committee?*

Balancing individual homeowners desire to expand, modify, etc their homes with protecting the community and neighbors from negative impacts.
Addressing innovative solutions to providing more affordable housing within out lower density communities.

I understand that I and all other applicants will be personally interviewed by the Town Council as part of the selection process for this appointment. I also understand that my application material will be a public document and available on the Town's website. Sensitive materials that you don't wish to be posted on the website should not be included with the application.*

- (●) YES
- ( ) NO

Other Boards/Commissions/Committees on which you would be interested in serving if not appointed to this seat?*

Park & Recreation Commission

You may attach personal resumes or other information which you believe would be helpful to the Council in its selection process.

Strauss .pdf

Thank you for your interest in serving the Town of San Anselmo and its citizens. For further information, please contact Carla Kacmar, at ckacmar@townofsananselmo.org or 415-258-4660.

Peter Thomas Strauss - *Registered Architect*

720 308-7651
ptstrauss@gmail.com
www.straussarchitects.com

Overview

I am a registered architect in California with 13+ years of experience. My professional experience is across all phases of practice, ranging from feasibility studies to design and entitlement to construction administration. The majority of my work experience has been on commercial, multi-family residential, or mixed-use projects with some experience in single-family residential and public buildings. In addition to my work experience, I have a Masters of Architecture from Columbia University and a Bachelor from the University of Colorado and have taught at UC Berkeley.

Work

Piechota Architecture (San Francisco, CA) - Senior Architect **January 2022 - Present**

Currently, I am a Senior Architect working on a number of single family homes. We strive to create projects which are specific and sensitive to the landscape they sit within.

Gensler (San Francisco, CA) - Design Leader & Project Architect **October 2019 - November 2021**

Design and thought leader specializing in residential multi-family and commercial mixed-use projects - hired to help develop the Residential practice area of the firm.

Select Core Projects:

- 361 Turk & 145 Leavenworth - *Forge Development* — San Francisco, CA
- 450 O'Farrell - *Forge Development* — San Francisco, CA
- Confidential Hotel / Resort — San Francisco Bay Area, CA
- Various Master Plan & Feasibility Studies — San Francisco Bay Area, CA

Strauss Architects, Inc. (San Francisco, CA) - Design Leader & Architect **March 2018 - October 2019**

In March of 2018, I started a practice focused on single and multi-family housing. As the sole proprietor, I was responsible for all aspects of the firm. In addition to the design and delivery of the projects, I was responsible for the marketing, management, billing, contracts, and other office administration.

Select Projects:

- 1270 Bush - *Multi-family* — San Francisco, CA
- Ghent House - *Single Family* — Hudson Valley, NY
- 539 Bryant - *Commercial Office* — San Francisco, CA
- Angwin Barn - *Single Family* — Napa County, CA
- 1101-1123 Sutter - *Multi-family* — San Francisco, CA
- E 14th Street - *Multi-family* — San Leandro, CA
- San Carlos Avenue - *Multi-family* — San Carlos, CA
- Hilldale House - *Single Family* — San Anselmo, CA

Handel Architects, LLC (San Francisco, CA) - Lead Designer & Project Architect **March 2013 - March 2018**

In a comprehensive architecture role, my responsibilities included design leadership, team management, and all aspects of project delivery. Project responsibilities would start from initial client discussions and continue as needed through to construction. I acted as an office-wide resource on the San Francisco entitlement process and provided design consultation and support for projects outside of core project assignments. I lead multiple projects through initial design, documentation, and construction.

Select Core Projects:

- 288 Pacific Ave. - *Grosvenor Americas* — San Francisco, CA
  33 Residential Units / 7 Floors / Type IB / $50+ mil Construction Budget
- 2465 Van Ness Ave. - *DM Development* — San Francisco, CA
  41 Residential Units / 7 Floors / Type IB / $40+ mil Construction Budget
- 2301 Lombard Ave. - *DM Development* — San Francisco, CA
  22 Residential Units / 4 Floors / Type 3B / $15+ mil Construction Budget

Additional Projects:
- Princess Kaiulani - *Hotel & Residential* Honolulu, HI
- Parcel F - *Commercial Office* San Francisco, CA
- 1001 Van Ness - *Multi-family* San Francisco, CA
- SOMA 2 - *Multi-family* San Francisco, CA

Gensler (San Francisco, CA) - Designer & Technical **October 2010 - March 2013**

As part of the architectural staff, my responsibilities included working on both the design and the technical development of multiple projects.

Select Core Projects:
- 222 Second Street - *Tishman Speyer* San Francisco, CA
  Part of both the design team and technical team of the 26 Story commercial tower. Responsible for the Design Development and Bid Documents of the Curtain wall facade.
- 888 Brannan Street - *SKS Partners* San Francisco, CA
  Designer on the architectural portion of a 500,000 SF building renovation and repositioning. I was responsible for the coordination and documentation of structural upgrades, façade systems, restoration of the historic facade and corresponding construction administration.

I also interned at Gensler during the summers of 2003 and 2004.

Freelance (San Francisco, CA) - Designer **December 2008 - October 2010**
- Second and B Street w/ Fee Munson Ebert - *Designer for a 42 unit apartment building* Marin County, CA
- Home Addition w/ Strauss Architects - *Design, Permit & CDs for a residential addition* Marin County, CA
- Pool House w/ Strauss Architects - *Design, Permit & CDs for a new pool house* Marin County, CA
- Art Pavilion w/ Michael Bell - *Design for a gallery pavilion* Hangzhou, China

Solomonoff Architecture Studio (New York, NY) - Designer **May 2008 - December 2008**

Wold Architects (St. Paul, MN) - Designer / Junior Architect **November 2005 - August 2007**

Education

Columbia University, New York – Graduate School of Architecture (GSAPP)

Masters of Architecture, May 2010

University of Colorado, Boulder - College of Architecture and Planning

Bachelors of Environmental Design in Architecture, May 2005

Teaching

University of California, Berkeley - Lecturer in Architecture

- 201A Spring 2015 - Co-taught a Graduate studio with Michael Bell which addressed affordable housing in Cupertino, within the context of the new Apple Campus.
- 100A Fall 2012 - Taught an undergraduate studio with goals of conceptual development, drawing and form making.

Columbia University (New York, NY) – Teaching Assistant

- Fall 2009 - Spring 2010 - Teaching Assistant for Third Year Graduate Design Studios

Software

Throughout my work, education and teaching experiences, I've leaned into learning new technologies and then mentoring others; from early implementation of Revit to acting as a firm resource for modeling and rendering advice.

- Design - Rhino, Sketch-Up, Vray, Indesign, Illustrator, Photoshop
- Documentation - Revit, AutoCAD, Bluebeam

525 San Anselmo Avenue
San Anselmo, CA 94960

Town of San Anselmo

Staff Report

TO: Town Council 6/28/2022 **Item #:** 3.

FROM:
David Donery, Town Manager & Jeff Zuba, Finance & Administrative Services Director

SUBJECT:
Discussion and Consideration of Memorandum of Understanding Proposal with the Service Employees International Union, Local 1021 (SEIU) for the period of July 1, 2022, to June 30, 2025.

RECOMMENDATION

That Council conduct a public hearing on the Proposed Memorandum of Understanding (MOU) between the Town of San Anselmo and SEIU Local 1021 for the period of July 1, 2022, to June 30, 2025.

BACKGROUND

SEIU Local 1021 represents approximately 17 employees in various departments across the Town. The SEIU Local 1021 MOU expires on June 30, 2022. Over the past few months, representatives of the Town and Local SEIU 1021 have met in good-faith and worked diligently to negotiate the terms of a successor MOU. The Town and SEIU 1021 reached a tentative agreement on May 26, 2022, for a three-year successor MOU. The SEIU bargaining team recommended the tentative agreement to its membership and it was ratified on June 16, 2022.

DISCUSSION

The following are the highlights that reflect the terms and significant economic items included in the tentative agreement between the Town and SEIU Local 1021. In addition to the economic items, some operations items were also addressed in the successor MOU.

1. Term of the Agreement: July 1, 2022, through June 30, 2025

2. Salary Increase: Job classes represented in this bargaining group will receive a 4.5% increase to the salary schedule effective July 1, 2022, a 4.5% increase effective July 1, 2023, and a 3% increase effective July 1, 2024.

3. One-Time Payment: Employees represented by the bargaining group will receive a one-time, non-pensionable payment of $2,500 on August 1, 2022, or pay period following Council ratification of a new MOU, whichever occurs later. This payment will not contribute to Classic or PEPRA employees' pensions and is just to normal payroll taxes. This payment is one-time payment only and is not scheduled to recur in the future.

4. Cost of Health Insurance Premium: For employees hired on or after July 1, 2014, the Town will increase its maximum contribution from $1,850 to $1,950 on July 1, 2022, $2,000 on July 1, 2023, and $2,050 on July 1, 2024, toward the cost of the premium for the family Kaiser health plan, less the payment for the P.E.R.S. medical plan. At no time shall the Town contribution for the Kaiser family health plan exceed the premium costs in effect per the then-current P.E.R.S. - Kaiser contract year.

5. Addition of Juneteenth as a holiday.

6. Non-Economic Items: in addition to the items discussed above, agreement was reached on other proposals, which reflect minor changes to existing provisions with little or no significant cost. The attached draft MOU includes all the changes agreed to by the parties. These negotiated MOU sections include:

    - Recognition and Cooperation (Section 1): Revision of language in section 1 and clarification of language in letter G and H.
    - Salaries and Equity Adjustments (Sections 2b and 2d): Revised the language benchmark positions. Modified the language for frequency of step increase.
    - Working Hours and Overtime (Section 4c): Revised compensatory time leave bank.

FISCAL IMPACT

The current total annual salary and benefit cost to the Town for the 23.80 full-time equivalent (FTE) positions of SEIU is $2,543,815. The additional ongoing cost of the successor MOU beyond the FY2021-2022 budget is:

	FY2022-23 (4.5%)	FY2023-24 (4.5%)	FY2024-25 (3%)
Wages:			
Base Salary	$77,172	$88,303	$62,406
Other costs:			
Pension*	$7,477	$8,538	$6,006
Taxes (Medicare, SS)	$5,904	$6,229	$4,591
Total Cost	**$90,553**	**$103,070**	**$73,003**

*This pension cost results only from the negotiated wage increase and does not include the annual contribution of lump sum unfunded pension liability. With the assumption of the terms and conditions of the pension benefit plan remains unchanged.

The cost is $90,553 for fiscal year 2022-2023, $103,070 for fiscal year 2023-2024, and $73,003 for fiscal year 2024-2025. In addition, there is a cost of $57,500 in one-time payments, which includes Social Security and Medicare taxes. These one-time payments will not contribute to Classic and PEPRA employee pension costs.

CONCLUSION

The action recommended for the Council is to conduct the public hearing on the Proposed Memorandum of Understanding (MOU) between the Town of San Anselmo and SEIU Local 1021. Pending the outcome of the public hearing, the next step will be to incorporate any changes identified by Council and bring back a resolution seeking approval of the Memorandum of Understanding between the Town of San Anselmo and SEIU Local 1021 for the period of July 1, 2022, through June 30, 2025.

DocuSign Envelope ID: 647FA0B9-0D9A-44BC-9CA4-BBBBD65633CE

SEIU, Local 1021

EST. 1907
TOWN OF
AN ANSELMO

Correspondence

FINAL COMPREHENSIVE TENTATIVE AGREEMENT

DATE: **May 24, 2022**

The following represents a comprehensive tentative agreement between the Town of San Anselmo ("Town") and Service Employees International Union, Local 1021 ("Local 1021" or "Union") as a result of the parties' collaborative discussions for a successor Memorandum of Understanding ("MOU").

Subject Matter	Agreement
General (Pronouns)	All gender-specific pronouns shall be changed to gender-neutral pronouns (i.e. they and their) throughout the successor MOU.
Emergency Response	Per Tentative Agreement dated May 24, 2022.
Holidays	The Town agrees to add Juneteenth as a holiday as per union proposal # 2 dated March 15, 2022.
Cafeteria Benefits	Per Town Counter Proposal dated May 24, 2022.
Wages/Benefits	Per Tentative Agreement dated May 24, 2022 and summarized as follows: • Effective July 1, 2022, all bargaining unit employees shall receive a four-and-a-half percent (4.5%) salary increase. • Effective July 1, 2023, all bargaining unit employees shall receive a four-and-a-half percent (4.5%) salary increase. • Effective July 1, 2024, all bargaining unit employees shall receive a three percent (3%) salary increase. • The Town agrees to its counter proposal re: step increases under existing subsection (d) dated March 22, 2022. In recognition of employees' contributions throughout the COVID-19 pandemic, the Town will pay all bargaining unit members, employed with the Town on date of payment, a one-time, non-pensionable lump sum off-salary schedule payment of $2,500 per attached Tentative Side Letter Agreement.

DocuSign Envelope ID: 647FA0B9-0D9A-44BC-9CA4-BBBBD65633CE

SEIU, Local 1021

EST. 1907
TOWN OF
AN ANSELMO

Correspondence

Working Hours and Overtime	Per Town Counter Proposal dated May 24, 2022.
Telecommute Policy	Per Side Letter Agreement dated May 24, 2022.
Recognition and Cooperation	Per Town Counter Proposal dated March 22, 2022.
Term	Subject to reaching an overall agreement, the Town agrees to a three-year term commencing on July 1, 2022 through June 30, 2025. The Town further agrees to eliminate subsection (C) of Section 40 which states, "Notwithstanding Section 29-a, continuation of this Agreement after June 30, 2021 may be voided by operation of Section 11-A-4 of Resolution No. 1561 of the San Anselmo Town Council."

All outstanding proposals to which there is no Tentative Agreement or which are not addressed above are to be withdrawn or deemed denied.

The parties agree to recommend positively this Final Comprehensive Tentative Agreement to their principals for ratification.

For the Town

DocuSigned by:
Jeff Zuba
DA8D9C1EBBFA473...
6/13/2022
Jeff Zuba — Date
Finance & Admin Services Director

DocuSigned by:
5514A803211841A...
6/13/2022
Christopher Boucher — Date
Labor & Employment Counsel

For the Union

DocuSigned by:
Joel Evans-Fudem
03DBA348BAAB416...
6/13/2022
Joel Evans-Fudem — Date
Field Representative

DocuSigned by:
Jackson Dobronyi
5F96508862A24CE...
6/13/2022
Jackson Dobronyi — Date
SEIU Chapter Bargaining Team Member

DocuSigned by:
Kevin MacLeod
D6002324FC86405...
6/13/2022
Kevin MacLeod — Date
SEIU Chapter Bargaining Team Member

DocuSign Envelope ID: 647FA0B9-0D9A-44BC-9CA4-BBBBD65633CE

SEIU, Local 1021

EST. 1907

TOWN OF
AN ANSELMC

Correspondence

DocuSigned by:
Justin Stevenson
48EDFB4A76814F7...

6/13/2022

Justin Stevenson — Date
SEIU Chapter Bargaining Team Member

DocuSign Envelope ID: 647FA0B9-0D9A-44BC-9CA4-BBBBD65633CE

NEGOTIATIONS 2022

SEIU, Local 1021

EST. 1907

TOWN OF SAN ANSELMO

Correspondence

TENTATIVE AGREEMENT

DATE: **May 24, 2022** **TIME:** **AM / PM**

Section: **(New) 22 – Emergency Leave**

22. EMERGENCY RESPONSE

a. Call Out: During the term of this Agreement, any employee called back to work at a timeother than the employee's regular work shift or called back to work for emergency purposes (an emergency declared by the Town Manager or other authorized head of the Town's Emergency Operations Center) shall be guaranteed four hours' pay at time and one-half, or may opt to take equivalent compensatory time off. Under this subsection (a),this minimum time payment does not apply to work that is contiguous to regularly- scheduled work.

b. Standby: During the term of this Agreement, an employee assigned to emergency standby (an emergency declared by the Town Manager or other authorized head of the Town's Emergency Operations Center) by ~~his/her~~their department head or designee, shall receive two (2) hours pay at the overtime rate (time and one-half) for each eight (8) hour period (or prorated as appropriate) the assigned employee spends on emergency standby.

c. An employee assigned to emergency standby shall be required to leave word where he/she may be contacted in order to return to work within a reasonable amount of time as determined by the department head/designee. Further, such assignment may include the requirement that an employee (who does not reside in Marin County) shall be located within Marin County, and if such requirement is made of an employee, the Town will reimburse reasonable costs for commercial lodging and meals while the employee is onemergency standby.

d. Emergency Service: Union agrees that any employee covered by this Agreement may, during ~~his/her~~their regular working hours be trained in firefighting, first aid, or other emergency service. Union further agrees that employees covered by this Agreement whether on or off duty may be called out for firefighting, first aid, or other emergency service. If so called for such emergency service and if overtime

DocuSign Envelope ID: 647FA0B9-0D9A-44BC-9CA4-BBBBD65633CE

results, overtime shall be paid in accordance with Section 4 of this Agreement. Before any employee is called for such emergency service, ~~his/her~~their capacity to serve will be determined by medical examination.

~~d.~~e. Worksite Closures and Evacuations

In the event that an emergency is declared that impacts Town facilities or operations and results in the closure of any facilities, employees regularly assigned to work in a closed worksite may be required, at the discretion of the Town, to report to a worksite other than their regular worksite to assist in emergency duties as a Disaster Service Worker, to a non-impacted worksite for regular duties, or to work from home if telework is available.

If employees are not assigned to a non-impacted worksite, assigned to assist in emergency duties, or assigned to telework, and at the Town Manager's sole determination, they may be granted leave up to five (5) work days in any calendar year and compensated ~~for~~at their regular rate of pay with no adverse effect to the employee.

This provision applies to Federal, State, County, or Local declared emergencies or to other non-declared circumstances that result in the closure of Town facilities.

The above section also applies if an employee is unable to work because the employee has been ordered or advised to evacuate their permanent residence and is unable to safely report to work due to natural disaster or other government-declared emergency, which shall be subject to the Town Manager's determination that a bona fide emergency exists and an employee qualifies for emergency leave.

If an employee is at the worksite when their permanent residence is advised to evacuate by relevant authorities, the employee will be allowed to leave work under this section, subject to the Town Manager's determination as discussed above.

The Town Manager's determination as to the above under this section shall not be grievable and is not subject to the Grievance Procedures as defined under Section 28 of this MOU.

DocuSign Envelope ID: 647FA0B9-0D9A-44BC-9CA4-BBBBD65633CE

NEGOTIATIONS 2022

SEIU, Local 1021

EST. 1907

TOWN OF AN ANSELMO

Correspondence

TOWN'S COUNTER PROPOSAL

DATE: **May 24, 2022** **TIME:** **AM / PM**

Section: **7 – Cafeteria Benefits Program**

7. CAFETERIA BENEFITS PROGRAM

The parties agree that upon expiration of this Agreement, the Town will set the amount of contributions made to the following benefits (with the exception of the health plan premium) at the amount then in effect and will not raise the amounts without further negotiation. The Town will contribute the following amounts per month per full time employee toward a cafeteria benefits program.

The cost of the premium for the family Kaiser health plan, less the payment for the P.E.R.S. medical plan (see Paragraph 6 a). At no time shall the Town contribution for the Kaiser family health plan exceed the premium cost in effect per the then-current P.E.R.S.-Kaiser contract year.

For employees hired on or after July 1, 2014, the Town will contribute ~~a~~ the following maximum ~~of~~
~~$1,850 per month~~ toward the cost of the premium for the family Kaiser health plan, less the payment for the P.E.R.S. medical plan (see Paragraph 6 a~~.).~~ .):

- Effective July 1, 2022, a maximum of $1,950 per month.
- Effective July 1, 2023, a maximum of $2,000 per month.
- Effective July 1, 2024, a maximum of $2,050 per month.

At no time shall the Town contribution for the Kaiser family health plan exceed the premium costs in effect per the then-current P.E.R.S.-Kaiser contract year.

The premium for the family dental plan with a benefit cap of $2,000.

DocuSign Envelope ID: 647FA0B9-0D9A-44BC-9CA4-BBBBD65633CE

SEIU, Local 1021

Correspondence

The premium for a term life insurance policy with a face value of two times an employee's annual base salary, with a not-to-exceed coverage maximum of $75,000. It is understood that as a non-contributory plan, all members of the unit must participate, subject to the carrier's definition of an eligible group member as specified in the plan document.
s·. The premium for a vision plan for employee and dependents which offers one examination and one change in lenses per twelve (12) months, and one change in frames per twenty-four (24) months with a $25 employee-paid deductible at a monthly cost to the Town.

6. The premium for a Long Term Disability plan, which shall be the same plan offered to management staff.

An employee may choose to allocate any or all of the amount specified in the cafeteria benefits program towards the cost of health insurance, dental insurance, vision insurance, life insurance or the supplemental retirement program. Dental insurance shall be required for all employees hired after July 1, 1989, or who are enrolled in the dental insurance program as of July 1, 1989, as long as the Town's contract for dental insurance requires mandatory participation.

c. Domestic partners who have registered through the PERS registration process or other domestic partner registration mechanism, if appropriate for a specific insurance, shall have access to the health related insurances offered by the Town.

DocuSign Envelope ID: 647FA0B9-0D9A-44BC-9CA4-BBBBD65633CE

NEGOTIATIONS 2022

SEIU, Local 1021

EST. 1907

TOWN OF AN ANSELMO

Correspondence

TENTATIVE AGREEMENT

DATE: **May 24, 2022** **TIME:** **AM / PM**

Section: **2 - SALARIES AND EQUITY ADJUSTMENTS**

a. Salaries

All represented bargaining unit ~~employees~~ classifications shall receive the following ~~across the board (ATB)~~wage increases:

~~July 1, 2018, all bargaining unit employees shall receive a three percent (3%) salary increase.~~
~~July 1, 2019, all bargaining unit employees shall receive a three percent (3%) salary increase~~
~~July 1, 2020, all bargaining unit employees shall receive a three percent (3%) salary increase.~~

- Effective July 1, 2022, all bargaining unit employees shall receive a four-and-a-half percent (4.5%) salary increase.
- Effective July 1, 2023, all bargaining unit employees shall receive a four-and-a-half percent (4.5%) salary increase
- Effective July 1, 2024, all bargaining unit employees shall receive a three percent (3%) salary increase.

~~All bargaining unit employees on the payroll effective upon the date of ratification shall receive a one-time $1,000 lump sum off-salary schedule payment.~~

In the event of a Town fiscal emergency such as County, State or Federal revenue-fluctuations cuts, new mandates, raising costs of CalPERS of ten percent (10 %) or more or a natural disaster, the parties agree to meet and confer over the impact and affects.

The monthly salaries payable to employees covered by this Agreement, shall be as set forth in:

Exhibit A-1 Exhibit A-2 Exhibit A-3

effective July 1, ~~2018~~2022

effective July 1, ~~2019~~2023
effective July 1, ~~2020~~2024

~~No further salary increases are included in this MOU.~~

b. Equity/Benchmark Studies

The parties will review 90 days before the expiration of this MOU the labor market against the Cities of Sausalito, Mill Valley, Larkspur, San Rafael and Novato, the Towns of Fairfax, Corte Madera, and Tiburon and perform a compensation study on specific benchmarks

Total compensation will be compared to the average of the listed jurisdictions, taking out the high and low figures. If the resulting survey offers less than four comparisons, the Town agrees to survey an additional jurisdiction, such as the County. The results of such study are the basis for consideration of salary adjustments for the following fiscal year.

Within a given series, benchmarks will have specific percentage salary relationships to other classifications in the series. Maintenance Worker II shall serve as the benchmark for the Maintenance Worker series (Series A). Recreation ~~Supervisor~~ Coordinator shall serve as the benchmark for the Recreation series (Series B). Administrative Services Assistant II shall serve as the benchmark for the Administrative Services series (Series C). Associate Planner shall serve as the benchmark for the Planner series (Series D) and Librarian I(Series F). Building Inspector will be surveyed as a separate benchmark (Series E).

c. Shift Differential

The Town agrees to pay a five percent (5%) shift premium computed on base pay for all hours actually worked on a regularly (as opposed to intermittently) assigned shift and for specifically assigned tasks which fall between 12:00 midnight and 6:30 A.M. To qualify for such shift premium pay, the employee must be assigned to the shift for at least three (3) consecutive work days or three (3) work days within five (5) consecutive work days. Employees working during any of these hours for their own convenience are not eligible for shift differential.

d. Step Increases

DocuSign Envelope ID: 647FA0B9-0D9A-44BC-9CA4-BBBBD65633CE

SEIU, Local 1021

EST. 1907

TOWN OF AN ANSELMO

Correspondence

The minimum monthly salary shall be at Step A of the appropriate range. Not less frequently than on each anniversary date, the Department Head shall evaluate the performance of each employee, review the evaluation with the employee, and based on said evaluation may advance the employee to a higher step or defer advancement pending further evaluation. A step increase shall occur on the employee's anniversary date unless the Department Head submits an evaluation with an overall Needs Improvements or Unsatisfactory rating. If no evaluation is completed, the employee shall receive a step increase effective on their anniversary date. The employee's next merit increase eligibility date shall not be changed by a deferral or delay of the merit increase. The Town will continue written performance evaluations after the top step of the employee position has been attained.

DocuSign Envelope ID: 647FA0B9-0D9A-44BC-9CA4-BBBBD65633CE

EST. 1907

TOWN OF
SAN ANSELMO

TENTATIVE SIDE LETTER AGREEMENT BETWEEN THE TOWN OF SAN ANSELMO AND SEIU, LOCAL 1021 RE: COVID-19 EMPLOYEE RECOGNITION COMPENSATION

DATE: **May 24, 2022**

In recognition of employees' contributions throughout the COVID-19 pandemic, including their voluntary agreement to a reduction-in-pay furlough and other cost savings measures in Fiscal Year 2020 – 2021, the Town will pay all bargaining unit members, employed with the Town on date of payment, a one-time, non-pensionable lump sum off-salary schedule payment of $2,500. The parties agree that this one-time payment shall not be PERSable (i.e. counted towards base salary or final compensation for CalPERS retirement calculation).

Unless otherwise stated, the provisions of this Side Letter Agreement supersede any inconsistent or conflicting provisions of the parties' Memorandum of Understanding, effective July 1, 2018 – June 30, 2022 ("MOU"). All other provisions of the parties' MOU shall otherwise remain in full force and effect.

This side letter will sunset upon the expiration of the 2018 – 2022 MOU.

Tentatively agreed to on this 24th day of May, 2022, by the parties' authorized representatives, subject to SEIU membership approval and Town Council's ratification.

For the Town		**For the Union**	
DocuSigned by: Jeff Zuba DA8D9C1EBBFA473...	6/13/2022	DocuSigned by: Joel Evans-Fudem 03DBA348BAAB416...	6/13/2022
Jeff Zuba	Date	Joel Evans-Fudem	Date
Finance & Admin Services Director		Field Representative	

DocuSign Envelope ID: 647FA0B9-0D9A-44BC-9CA4-BBBBD65633CE

TENTATIVE SIDE LETTER AGREEMENT BETWEEN THE TOWN OF SAN ANSELMO AND SEIU, LOCAL 1021 RE: COVID-19 EMPLOYEE RECOGNITION COMPENSATION

(*Continued*)

DocuSigned by:
5514A803211841A...
6/13/2022

Christopher Boucher — Date
Labor & Employment Counsel

DocuSigned by:
5F96508862A24CE...
6/13/2022

Jackson Dobronyi — Date
SEIU Chapter Bargaining Team Member

DocuSigned by:
D6002324FC86405...
6/13/2022

Kevin MacLeod — Date
SEIU Chapter Bargaining Team Member

DocuSigned by:
48EDFB4A76814F7...
6/13/2022

Justin Stevenson — Date
SEIU Chapter Bargaining Team Member

DocuSign Envelope ID: 647FA0B9-0D9A-44BC-9CA4-BBBBD65633CE

NEGOTIATIONS 2022

SEIU, Local 1021

EST. 1907

TOWN OF SAN ANSELMO

Correspondence

TOWN'S COUNTER PROPOSAL

DATE: **May 24, 2022** **TIME:** **AM / PM**

Section: **4 – Working Hours and Overtime**

a. The standard work week during the term of the Agreement shall consist of forty (40) hours or thirty-seven and one-half (37.5) hours of work in any seven consecutive calendar day period, as shown for each classification in Exhibit A. Variation from standard schedules shall be posted five working days in advance, other than in an emergency as determined by the Department Head.

b. Overtime is time worked with the authorization of the Department Head beyond the standard work day or the standard work week. Hours worked beyond 37.5 hours in one week for employees in a 37.5 hours per week classification shall be considered as overtime. A holiday, sick leave, or vacation time falling within said week shall betreated as work time for the purposes of this section. Overtime shall not apply when a change in the scheduled work day or work week is granted to accommodate a request by the employee.

c. The employee may elect to take ~~his/her~~their overtime in pay or compensatory time at the rate of time and one-half, subject to operational needs and the approval of the Department Head. Any denial of said request will be accompanied by a written explanation from the Department Head. Compensatory time may be accrued until it reaches the equivalent of double the employee's regular work week, for a maximum of 80 hours (or prorated based on work schedule).

d. Flexible scheduling. Alternatives to a standard five day schedule, including flexible time, will be granted upon agreement between the employee and the employee's supervisor or manager.

e. Overtime shall be compensated at double time (2.0) for time worked in excess of twelve (12) consecutive hours.

DocuSign Envelope ID: 647FA0B9-0D9A-44BC-9CA4-BBBBD65633CE

EST. 1907

TOWN OF
SAN ANSELMO

TENTATIVE SIDE LETTER AGREEMENT BETWEEN THE TOWN OF SAN ANSELMO AND SEIU, LOCAL 1021 RE: TRIAL TELECOMMUTE POLICY

DATE: **May 24, 2022**

For employees who may be eligible to participate in telecommuting, the Town Manager will implement a trial Telecommute Policy ("Policy") and evaluate at the end of the MOU term for effectiveness. The parties shall meet and discuss said Policy prior to its implementation.

Unless otherwise stated, the provisions of this Side Letter Agreement supersede any inconsistent or conflicting provisions of the parties' Memorandum of Understanding, effective July 1, 2012 – June 30, 2025 ("MOU"). All other provisions of the parties' MOU shall otherwise remain in full force and effect.

This side letter will sunset upon the expiration of the 2022 – 2025 MOU.

Tentatively agreed to on this 24th day of May, 2022, by the parties' authorized representatives, subject to SEIU membership approval and Town Council's ratification.

For the Town

DocuSigned by:
Jeff Zuba
DA8D9C1EBBFA473...
6/13/2022
Jeff Zuba — Date
Finance & Admin Services Director

DocuSigned by:
5514A803211841A...
/13/2022
Christopher Boucher — Date
Labor & Employment Counsel

For the Union

DocuSigned by:
Joel Evans-Fudem
03DBA348BAAB416...
6/13/2022
Joel Evans-Fudem — Date
Field Representative

DocuSigned by:
Jackson Dobronyi
5F96508862A24CE...
6/13/2022
Jackson Dobronyi — Date
SEIU Chapter Bargaining Team Member

DocuSign Envelope ID: 647FA0B9-0D9A-44BC-9CA4-BBBBD65633CE

DocuSigned by:
Kevin MacLeod
D6002324FC86405...

6/13/2022

Kevin MacLeod — Date
SEIU Chapter Bargaining Team Member

DocuSigned by:
Justin Stevenson
48EDFB4A76814F7...

6/13/2022

Justin Stevenson — Date
SEIU Chapter Bargaining Team Member

DocuSign Envelope ID: 647FA0B9-0D9A-44BC-9CA4-BBBBD65633CE

SEIU, Local 1021

EST. 1907

TOWN OF SAN ANSELMO

NEGOTIATIONS 2022

Correspondence

TOWN'S COUNTER PROPOSAL TO UNION PROPOSAL # 9

DATE: **3/22/22** **TIME:** **AM**

THE FOLLOWING CONSTITUTES THE TOWN'S COUNTER PROPOSAL TO SEIU, LOCAL 1021'S PROPOSAL RE:

1. RECOGNITION AND COOPERATION

~~The Town shall adhere to the U.S. Supreme Court decision called Janus v AFSCME. TheTown and the Union shall meet and confer as necessary to implement that decision.~~

A. Town hereby recognizes Union as the bargaining representative for purposes of establishing salaries, hours, fringe benefits and working conditions for all employees within the Public Essential Services Unit as listed by class in Exhibit A hereto, together with any related classes established during the term of this Agreement.

B. Both parties recognize their mutual obligation to cooperate with each other to assure maximum service of the highest quality and efficiency to the citizens of San Anselmo.

C. Whenever a new employee is hired in any of the job classifications covered by this Agreement, Town shall notify said employee that Union is the recognized bargaining representative for employees in that classification, shall make a copy of this Agreement available to said employee, and furnish Union with the name and address of said employee. The Union will have the opportunity to meet with the new employee to provide a Union orientation within thirty (30)

DocuSign Envelope ID: 647FA0B9-0D9A-44BC-9CA4-BBBBD65633CE

days of hire. The Union orientation shall be a private meeting of no more ~~that~~than thirty (30) minutes and held during working hours.

D. Town shall notify Union ten working days in advance of final action relating to changes inhours or working conditions, other than temporary action in an emergency situation.

~~E. Town shall furnish to Union semi-annually a list of the names, classifications, and addresses of all employees in the Unit, and to each employee a monthly statement of his/her net accrual of vacation and sick leave.~~

~~F.~~E. Union may designate three employees in the bargaining unit as employee representatives, who may absent themselves from duty for an average of one hour per month each on Union business.

~~G. Agency shop provisions shall be:~~

~~1. All employees covered by this Agreement shall either become members of Union or pay Union, as an agency fee, an amount of money equal to all monthly dues and assessments authorized in writing by Union's President.~~

~~2. All new employees shall provide the Administrative Office within five calendar days ofemployment with a dues deduction card, or a Union fee card, or such employees shall be required to submit the above amounts (monthly dues and assessments) directly to Union and furnish the Town with a copy of the receipt.~~

~~3. Any employee who is a member of a bona fide religion, body or sect which has historically held conscientious objection to joining or financially supporting a public employee organization shall not be required to join or financially support Union. Those employees shall, in lieu of monthly dues and assessments pay sums equal to such monthly dues and assessments to a charitable fund exempt from taxation underSection 501 (c) (3) of the Internal Revenue Code.~~

~~4. The parties agree that a failure of an obligated employee in a bargaining unit to pay afair share fee shall be grounds for the Union to file an action in Small Claims Court.~~

~~5. Union shall indemnify and save Town harmless against any and all claims, demands, suits, orders, judgment, or other forms of liability that shall arise~~

~~out of, or by reason of, action taken under this section.~~

G. Dues/COPE/Union-Sponsored Benefit Program Deductions

(a) ~~(a)~~ The employer shall honor an employee's check-off authorization for dues, COPE or other Union-sponsored program, which are submitted in writing, through electronically recorded phone calls, via online deduction authorization, or by any other means of indicating agreement allowable under state and federal law, regardless of whether the employee is a member of the Union.

(b) On a semi-annual basis, every January and July, the Union will provide Town with a current certified list of members with the dollar and/or percentage amount of dues and/or fees to deduct per employee, a statement that the Union has and will maintain written authorizations signed by the individuals from whose salary or wages the union deductions are to be made, and a statement that the Union shall indemnify Town for any claims made by the employee for deductions made in reliance on that certification, in accordance with Government Code §1157.12(a).

(b) Deductions for dues, COPE or other Union-sponsored program shall start the pay period after the employer receives ~~notification~~the Union's certification of the employee's authorization. The employer shall transmit such payments to the Union through electronic funds transfer no later than thirty (30) days after the deduction from the employee's earnings occurs.

(c) Requests to authorize dues/other deduction(s), or requests to change status regarding such deductions, shall be directed to the Union rather than the employer. The employer shall rely on the Union's explanations in a certified list, submitted by a representative of the Union who has authority to bind the Union, regarding whether an authorization/change in deduction(s) has been requested by the employee.

(d) The Union shall not provide the employer a copy of the employee's authorization unless a dispute arises about the existence or terms of the authorization.

(e) Union shall indemnify and save Town harmless against any and all claims, demands, suits, orders, judgment, or other forms of liability that shall arise out of, or by reason of, action taken under this section.~~The Union shall indemnify the employer for any claims made regarding such deductions.~~

(f) Violations of this Section of the MOU are grievable.

H. Data Pertaining to Deductions

The employer shall produce to SEIU Local 1021's Membership Department every ~~two (2) weeks~~month, on a regular ongoing basis, a malleable electronic file containing the following bargaining unit member information:

1. ~~1.~~ Full Name ~~(first, middle, last, suffix)~~
2. Home Address
3. Work Phone

4. Work Cell Phone
5. Personal Cell Phone
6. Work Email Address
7. Personal Email Address
8. Hire Date
9. Birthdate
10. Job Classification Code
11. Job Classification Title/Name
12. Job Type (full-time, part-time, per diem, as needed, etc.)
13. Pay Rate
14. Pay Step
15. Pay Status (active, on leave, etc.)
16. Bargaining Unit Code or Name / Union Code
17. Department/Division/Program Code(s)
18. Department/Division/Program Name(s)
19. Campus or Facility Name
20. Work Location Name
21. Work Location Address
22. Shift/Schedule
23. Last Paid Date, or Hours worked in most recent pay period

2. ~~Employee Number~~
~~3. Job Classification~~
~~4. Job Type (full-time, part-time, per diem, as needed)~~
~~5. Bargaining Unit~~
~~6. Hours worked in the preceding payroll period, which are the basis for the dues deduction amount~~
~~7. Pay Step~~
~~8. Pay Rate~~
~~9. Pay Status (active, on leave, separated from employment, etc.)~~
~~10. Department~~
~~11. Division (subcode of the department, if applicable)~~

I. Receipt of Bargaining Unit Lists

Every 3 months, the Union shall receive a list of all current employees covered by this Agreement, which shall include each employee's name, home address, home and cell phone numbers, personal and work e-mail addresses, work locations, department, employee identification number, hourly rates of pay, hours worked, gross pay. This list will include all employees newly hired, rehired, reinstated, transferred into or out of the bargaining unit, transferred between departments, promoted reclassified, downgraded, placed on leaves of absence of any type including disability, placed on or recalled from layoff, separated (including retirement), added or deleted from the bargaining unit, or who have made any changes in Union deductions during the preceding three-month period.

J. ~~Protect~~Notification of request for contact, biographical and/or demographic information of unit members from third-parties.

DocuSign Envelope ID: 647FA0B9-0D9A-44BC-9CA4-BBBBD65633CE

~~In order to protect bargaining unit employees from harassment or invasion of privacy, t~~The employer ~~shall~~agrees to ~~immediately~~ notify the Union of any third-party requests for contact, biographical and/or demographic information about the bargaining unit employees. ~~The employer shall promptly provide the Union a copy of the request and any materials submitted with the request.~~

~~The employer shall provide the Union at least ten (10) days to review the request and challenge the scope of the request prior to the employer responding to the request. The employer agrees to consider the Union's response prior to disclosing to a third party any contact, biographical, and/or demographic information about the bargaining unit employees.~~

~~The employer agrees that it will not create a report for a non-exclusive representative requestor that does not already exist. If the employer is required by law to furnish a non-exclusive representative requestor with a report, it agrees not to provide it in a malleable electronic format.~~

~~The employer shall not permit a non-exclusive representative to access bargaining unit members during working hours or in working areas.~~

~~The employer agrees that non-exclusive representatives are prohibited from soliciting bargaining unit members on the employer's property.~~

~~The employer agrees to adopt further safeguards against harassment or invasion of privacy by non-exclusive representatives, including but not limited to establishing filters in the employer's email system to block emails from non-exclusive representatives.~~

525 San Anselmo Avenue
San Anselmo, CA 94960

Town of San Anselmo

Staff Report

TO: Town Council 6/28/2022 **Item #:** 4.

FROM:
Dave Donery, Town Manager, Linda Kenton, Town Librarian & Assistant Town Manager, & Jeff Zuba, Finance & Administrative Services Director

SUBJECT:
San Anselmo Sales Tax & Library Parcel Tax Renewals

RECOMMENDATION

That Council approve of the parameters for the proposed ballot measures placing a one-cent sales tax measure for general purposes and a special library parcel tax measure on the November 2022 General Election ballot, including final ballot language and a statement of intent on expenditures, and provide direction to staff.

BACKGROUND

At the meeting of April 12, the Council reviewed the results of the recent public opinion poll which tested the public's appetite for the renewal of the Library parcel tax and Measure D sales tax. The Council also reviewed draft ballot questions and provided input on the potential duration of the tax measures. Following presentations, discussion and public comment related to the measures, the Council directed staff to begin work to put a one-cent general sales tax measure and library parcel tax measure on the November 8, 2022, ballot.

DISCUSSION

I. Measure D Renewal

There are several decisions that still need to be made regarding the sales tax ballot measure. These decisions include: the final wording of the ballot question and a statement of intent on expenditures.

A. Ballot Question

The Town must formulate the ballot question that describes the measure. Based on input from Council during previous meetings, staff and consultants developed the following proposed question:

> To maintain/enhance general Town of San Anselmo services/facilities such as repairing potholes; repaving roads' improving water storage for drought resilience; maintaining 9-1-1 emergency firefighter/paramedic response times; improving fire protection, shall the Town of San Anselmo ordinance be adopted extending the existing voter-approved sales tax at 1¢ rate, providing $2,400,000 annually for general government use until ended by voters, requiring independent citizen oversight/audits, no money for administrator salaries and all funds staying in San Anselmo under local control?

Under state law, the question must be 75 words or less; therefore, any suggested changes to the proposed language should account for this word limit. Once the Council agrees to the final version of the ballot question, it will be incorporated into the attached draft resolution, which the Council will formally adopt at its July 26, 2022, meeting. (Attachment 1)

B. Term of Measure D Renewal

At the June 14, 2022, a majority of the Town Council supported having a discussion on the term only of the Measure D renewal. The current ballot question provides that the tax will remain in effect, "until ended by voters". Staff has worked with Town consultants to provide options for the Council's consideration based on the survey results and on possible timing for renewal of the Library tax.

For the Library tax, a 9-year duration was tested and it did well. Staff recommends leaving this unchanged, as reflected in the attached draft resolution. (Attachment 3). This would leave the renewal with the same term as the previous tax with the new measure running for 9 years from 2024-25 through 2032-33 and with proposed renewal in 2032.

For the Measure D renewal, staff recommends that the Council consider a term of 9 or 12 years. A conservative 9-year term would expire in 2031 with renewal considered in 2030, which would avoid overlapping the library tax renewal. Another option would be a 12-year term, which would expire in 2034 and could be renewed that year, again staying clear of the library tax. The polling suggests that both options are viable.

C. Statement of Intent on Expenditures

Although the Measure D renewal is a general tax that cannot be dedicated to a specific use, the Council may adopt a statement of intent on expenditures to outline, generally, how the Council intends to spend the tax proceeds. Staff proposes the following statement for the Council's consideration:

If the Town Measure is renewed, the current Town Council intends to spend the money for:

- Repair potholes and maintain streets
- Reduce the impacts of drought with new water sources and storage
- Improve fire protection services
- Maintain 9-1-1 emergency, firefighter, and paramedic response times
- Maintain bridges and retaining walls
- Improve and maintain Town parks

D. Accountability Measures - Staff recommends that the Capital Program Monitoring Committee continue to review and report on the use of the tax proceeds, as reflected in the attached Ordinance. (Attachment 2).

II. Library Parcel Tax Renewal

A. Ballot Question

The Town must formulate the ballot question that describes the measure. Based on input from Council, staff and consultants developed the following proposed question:

> To continue expiring funding for San Anselmo Library to maintain library operating hours; increase book/ ebook collections; maintain programs for children, families, seniors/ people with disabilities; and maintain free internet access, computers/technology, shall the measure be adopted extending the existing San Anselmo library services tax at the existing rate of $70 per parcel, providing $320,000 annually, for nine years, with annual adjustments, mandatory audits, independent citizens' oversight and all funds locally controlled for San Anselmo Library?

Note that the $70 rate proposed in the draft ballot question will be the same as the rate being charged per parcel in Fiscal Year 2023-2024, when the current Library Tax expires. Accordingly, the proposed tax will take effect on July 1, 2024, at that existing rate. Any changes to the proposed ballot question will be incorporated into the attached draft resolution for adoption by the Council at its July 26, 2022, meeting. (Attachment 3).

B. Accountability Measures

Staff recommends that the Library Tax Oversight Committee continue to review and report on the use of the tax proceeds, as reflected in the attached Ordinance. (Attachment 4).

III. Ballot Measures - Timeline

The timeline for the ballot measures is set by the Marin County Registrar of Voters. The approved resolutions are due to the County by Friday, August 12th. The Town Council will give final consideration of the measures, resolutions, and ordinances at the July 26, 2022, Town Council meeting.

The following are key dates for the preparation and processing of the ballot measures:

July 26	Meeting date to consider resolutions for ballot measures
August 12	Last day to submit resolutions for ballot measures to the Marin County Registrar of Votes
August 13 - 22	Ten (10) day public examiniation examination period
August 15	Measure letters assigned by Registrar of Voters
August 17	Last day to withdraw a measure from the ballot
August 22	Last day to submit or withdraw measure arguments to the Election Dept
August 23 - September 1	Ten (10) day public examination period of measure arguments
August 29	Last day to submit rebuttals to the arguments for or against a measure
August 30 - September 8	Ten (10) day public examination period of rebuttal arguments

CEQA AND CLIMATE ACTION PLAN CONSISTENCY

The Council's discussion of this item is not a "project" under the California Environmental Quality Act, because

it does not involve an activity which has the potential to cause a direct or reasonably foreseeable indirect physical change in the environment. (Cal. Pub. Res. Code § 21065).

CONCLUSION

Staff seeks direction on the above issues so that the resolutions and ordinances for the proposed ballot measures can be prepared and presented to the Council for approval at the next regular Town Council meeting.

Attachments:

Attachment #1: Sales Tax draft Resolution
Attachment #2: Sales Tax draft Ordinance
Attachment #3: Library Tax draft Resolution
Attachment #4: Library Tax draft Ordinance

DRAFT
for June 28, 2022, Town Council Meeting

RESOLUTION NO. _____

A RESOLUTION OF THE TOWN COUNCIL OF THE TOWN OF SAN ANSELMO CALLING AND GIVING NOTICE OF THE HOLDING OF AN ELECTION TO BE HELD NOVEMBER 8, 2022, AND REQUESTING THE BOARD OF SUPERVISORS OF THE COUNTY OF MARIN CONSOLIDATE SAID ELECTION; AND AUTHORIZING THE TOWN CLERK OR HER DULY AUTHORIZED OFFICERS AND AGENCY TO CARRY OUT ALL THE NECESSARY PROCEDURES FOR SAID ELECTION SUBMITTING TO THE VOTERS THE QUESTION RELATED TO IMPOSING A ONE CENT (1 ¢) TRANSACTIONS AND USE TAX MEASURE FOR GENERAL PURPOSES

WHEREAS, the Town of San Anselmo is a wonderful place to live, raise a family and retire, with great local schools, quality public services and stunning natural beauty; and

WHEREAS, the Town of San Anselmo is committed to protecting a small-town ambience, access to parks and open space, historic downtown and overall quality of life; and

WHEREAS, in 2013, San Anselmo voters approved a half-cent sales tax that supports Town services and infrastructure, including repairing potholes, repaving roads, reducing traffic congestion, maintaining and improving sidewalks, drainage and street medians and preserving public safety; and

WHEREAS, San Anselmo's locally-controlled sales tax funding is set to expire and, if this funding is not renewed by voters, San Anselmo will lose $1.2 million in annual local funding, requiring the Town's pothole repair and street maintenance program to be cut by at least 50 percent; and

WHEREAS, the San Anselmo Town Council seeks to renew expiring funding from the voter-approved local sales tax and proposes to increase the rate to one cent to provide approximately $2.4 million in locally-controlled funding; and

WHEREAS, funds from a renewed sales tax could be used for general Town services and infrastructure such as repairing potholes and maintaining streets, reducing the impacts of drought with new water sources and storage, improving fire protection services, maintaining 9–1–1 emergency, firefighter and paramedic response times, maintaining bridges and retaining walls, and improving and maintaining Town parks; and

WHEREAS, all money raised by the measure may only be used to fund local services and infrastructure in San Anselmo and cannot be taken away by the State; and

WHEREAS, the measure to renew the local sales tax would require the same strict fiscal accountability provisions as required by the current measure, including an independent citizens' oversight committee, mandatory financial audits and annual public spending disclosure to the community; and

WHEREAS, essential purchases like groceries and prescription medicine are exempt from a sales tax to help ensure the cost is not a burden to those on fixed or limited incomes; and

DRAFT
for June 28, 2022, Town Council Meeting

WHEREAS, Article XIIIC, Section 2 of the California Constitution authorizes cities, by a majority vote of the qualified electors, to impose a general tax; and

WHEREAS, Part 1.6 (commencing with Section 7251) of Division 2 of the California Revenue and Taxation Code and Section 7285.9 of Part 1.7 of Division 2 authorize a city to adopt a transactions and use tax ordinance, which shall be operative if a majority of the electors voting on the measure vote to approve the imposition of the tax at an election called for that purpose; and

WHEREAS, the Town Council desires to submit the ordinance attached hereto as Exhibit A containing a ballot measure to adopt a one cent (1¢) sales tax measure (transactions and use tax) to be used exclusively for general purposes to the qualified voters of the Town of San Anselmo at the Election to be held in the Town on November 8, 2022; and

WHEREAS, it is desirable that the election be consolidated with the statewide election to be held on the same date and that within the Town, the precincts, polling places, and election officers of the two elections to be the same; and

WHEREAS, it is desirable that the County Election Department of County of Marin canvass the returns of the Election and that the Election be handled in all respects as if there were only one election.

NOW, THEREFORE, THE TOWN COUNCIL OF THE TOWN OF SAN ANSELMO, CALIFORNIA, DOES RESOLVE, DECLARE, DETERMINE, AND ORDER AS FOLLOWS:

Section 1. That pursuant to the requirements of the laws of the State of California relating to General Law Cities, there is called and ordered to be held in the Town of San Anselmo, California, on Tuesday, November 8, 2022, an election.

Section 2. That pursuant to the requirements of Section 10403 of the Elections Code, the Board of Supervisors of the County of Marin is hereby requested to consent and agree to the consolidation of said election.

Section 3. That the Town Council, pursuant to its rights and authority, does order submitted to the voters at the election the following question:

To maintain/ enhance general Town of San Anselmo services/ facilities such as repairing potholes; repaving roads; improving water storage for drought resilience; maintaining 9-1-1 emergency firefighter/ paramedic response times; improving fire protection, shall the Town of San Anselmo ordinance be adopted extending the existing voter-approved sales tax at a 1¢ rate, providing $2,400,000 annually for general government use for __ years, requiring independent citizen oversight/ audits, no money for administrator salaries and all funds staying in San Anselmo under local control?	Yes	
	No	

DRAFT
for June 28, 2022, Town Council Meeting

Section 4. The text of the proposed ordinance to be submitted to the voters is attached hereto as Exhibit A.

Section 5. The Town acknowledges that the consolidated election will be held and conducted in the manner prescribed in Section 10418 of the Elections Code.

Section 6. Pursuant to California Elections Code Section 9280, the Town Clerk shall transmit a copy of the measure to the Town Attorney who shall prepare an impartial analysis of the measure in accordance with said Section 9280. Arguments for and against said measure may be filed in accordance with applicable provisions of the law. Pursuant to California Elections Code Section 9285, the provisions of which are hereby adopted, when the Clerk has selected the arguments for and against the measure which will be printed and distributed to the voters, the Clerk shall send copies of the argument in favor of the measure to the authors of the argument against, and copies of the argument against to the authors of the argument in favor. The rebuttal arguments shall be filed with the Town Clerk not more than 10 days after the final date for filing direct arguments. Rebuttal arguments shall be printed in the same manner as the direct arguments. Each rebuttal argument shall immediately follow the direct argument that it seeks to rebut. The text of the measure shall be printed on the ballot in the voter information portion of the sample ballot.

Section 7. That the Marin County Election Department is authorized to canvass the returns of said election. The election shall be held in all respects as if there were only one election, and only one form of ballot shall be used.

Section 8. That the Marin County Board of Supervisors is requested to issue instructions to the County Elections Department to take any and all steps necessary for the holding of the consolidated election.

Section 9. That the Town Clerk shall certify to the passage and adoption of this Resolution and enter it into the book of original resolutions.

Section 10. Pursuant to California Elections Code Section 14212, the polls for the election shall be open at 7:00 a.m. on election day and shall remain open continuously from that time until 8:00 p.m. of the same day, when the polls shall be closed, except as provided in said Section 14212.

Section 11. That in all particulars not recited in this resolution, the election shall be held and conducted as provided by law for holding municipal elections.

Section 12. That notice of the time and place of holding the election is given and the Town Clerk is authorized, instructed, and directed to give further or additional notice of the election, in the time, form, and manner as required by law.

Section 13. That the Town Clerk is hereby directed to file a certified copy of this resolution with the Board of Supervisors and the Election Department of the County of Marin.

Section 14. This resolution shall take effect immediately.

DRAFT
for June 28, 2022, Town Council Meeting

I, the undersigned hereby certify that the foregoing is a full, true, and complete copy of a resolution duly passed and adopted by the Town of San Anselmo Town Council at a regular meeting thereof held on the 26th day of July, 2022, by the following vote:

AYES:
NOES:
ABSENT:
ABSTAIN:

Approved: _____
Mayor

ATTEST: _____
Town Clerk

DRAFT
for June 28, 2022, Town Council Meeting

EXHIBIT A

TOWN OF SAN ANSELMO ORDINANCE NO. _____

**AN ORDINANCE OF THE TOWN OF SAN ANSELMO
AMENDING SAN ANSELMO MUNICIPAL CODE TITLE 8, CHAPTER 8
"TRANSACTIONS AND USE TAX" AND
IMPOSING A TRANSACTIONS AND USE TAX TO BE
ADMINISTERED BY THE CALIFORNIA DEPARTMENT OF TAX AND FEE ADMINISTRATION
(November 8, 2022, Ballot Measure)**

DRAFT
for June 28, 2022, Town Council Meeting

ORDINANCE NO._____

AN ORDINANCE OF THE TOWN OF SAN ANSELMO
AMENDING SAN ANSELMO MUNICIPAL CODE TITLE 8, CHAPTER 8
"TRANSACTIONS AND USE TAX" AND
IMPOSING A TRANSACTIONS AND USE TAX TO BE
ADMINISTERED BY THE CALIFORNIA DEPARTMENT OF TAX AND FEE
ADMINISTRATION
(November 8, 2022, Ballot Measure)

Section 1. The People of the Town of San Anselmo ordain as follows: that the San Anselmo Municipal Code Title 8, Chapter 8 "Transactions and Use Tax," shall be repealed and replaced with the following amended provisions, subject to voter approval, as follows:

8-8.01. TITLE. This ordinance shall be known as the Town of San Anselmo Transactions and Use Tax Ordinance. The Town of San Anselmo hereinafter shall be called "Town." This ordinance shall be applicable in the incorporated territory of the Town.

8-8.02. OPERATIVE DATE. "Operative Date" means the first day of the first calendar quarter commencing more than 110 days after the adoption of this ordinance, the date of such adoption being as set forth below.

8-8.03. PURPOSE. This ordinance is adopted to achieve the following, among other purposes, and directs that the provisions hereof be interpreted in order to accomplish those purposes:

A. To impose a retail transactions and use tax in accordance with the provisions of Part 1.6 (commencing with Section 7251) of Division 2 of the Revenue and Taxation Code and Section 7285.9 of Part 1.7 of Division 2 which authorizes the Town to adopt this tax ordinance which shall be operative if a majority of the electors voting on the measure vote to approve the imposition of the tax at an election called for that purpose.

B. To adopt a retail transactions and use tax ordinance that incorporates provisions identical to those of the Sales and Use Tax Law of the State of California insofar as those provisions are not inconsistent with the requirements and limitations contained in Part 1.6 of Division 2 of the Revenue and Taxation Code.

C. To adopt a retail transactions and use tax ordinance that imposes a tax and provides a measure therefore that can be administered and collected by the California Department of Tax and Fee Administration in a manner that adapts itself as fully as practicable to, and requires the least possible deviation from, the existing statutory and administrative procedures followed by the California Department of Tax and Fee Administration in administering and collecting the California State Sales and Use Taxes.

D. To adopt a retail transactions and use tax ordinance that can be administered in a manner that will be, to the greatest degree possible, consistent with the provisions of Part 1.6 of Division 2 of the Revenue and Taxation Code, minimize the cost of collecting the transactions and use taxes, and at the same time, minimize the burden of record keeping upon persons subject to taxation under the provisions of this ordinance.

8-8.04. CONTRACT WITH STATE. Prior to the operative date, the Town shall contract with the California Department of Tax and Fee Administration to perform all functions incident to the administration and operation of this transactions and use tax ordinance; provided, that if the Town shall not have contracted with the California Department of Tax and Fee Administration prior to the operative date, it shall nevertheless so contract and in such a case the operative date shall be the first day of the first calendar quarter following the execution of such a contract.

8-8.05. TRANSACTIONS TAX RATE. For the privilege of selling tangible personal property at retail, a tax is hereby imposed upon all retailers in the incorporated territory of the Town at the rate of 1% of the gross receipts of any retailer from the sale of all tangible personal property sold at retail in said territory on and after the operative date of this ordinance.

8-8.06. PLACE OF SALE. For the purposes of this ordinance, all retail sales are consummated at the place of business of the retailer unless the tangible personal property sold is delivered by the retailer or his agent to an out-of-state destination or to a common carrier for delivery to an out-of-state destination. The gross receipts from such sales shall include delivery charges, when such charges are subject to the state sales and use tax, regardless of the place to which delivery is made. In the event a retailer has no permanent place of business in the State or has more than one place of business, the place or places at which the retail sales are consummated shall be determined under rules and regulations to be prescribed and adopted by the California Department of Tax and Fee Administration.

8-8.07. USE TAX RATE. An excise tax is hereby imposed on the storage, use or other consumption in the Town of tangible personal property purchased from any retailer on and after the operative date of this ordinance for storage, use or other consumption in said territory at the rate of 1% of the sales price of the property. The sales price shall include delivery charges when such charges are subject to state sales or use tax regardless of the place to which delivery is made.

8-8.08. ADOPTION OF PROVISIONS OF STATE LAW. Except as otherwise provided in this ordinance and except insofar as they are inconsistent with the provisions of Part 1.6 of Division 2 of the Revenue and Taxation Code, all of the provisions of Part 1 (commencing with Section 6001) of Division 2 of the Revenue and Taxation Code are hereby adopted and made a part of this ordinance as though fully set forth herein.

8-8.09. LIMITATIONS ON ADOPTION OF STATE LAW AND COLLECTION OF USE TAXES. In adopting the provisions of Part 1 of Division 2 of the Revenue and Taxation Code:

DRAFT
for June 28, 2022, Town Council Meeting

A. Wherever the State of California is named or referred to as the taxing agency, the name of this Town shall be substituted therefor. However, the substitution shall not be made when:

1. The word "State" is used as a part of the title of the State Controller, State Treasurer, State Treasury, or the Constitution of the State of California;

2. The result of that substitution would require action to be taken by or against this Town or any agency, officer, or employee thereof rather than by or against the California Department of Tax and Fee Administration, in performing the functions incident to the administration or operation of this Ordinance.

3. In those sections, including, but not necessarily limited to sections referring to the exterior boundaries of the State of California, where the result of the substitution would be to:

a. Provide an exemption from this tax with respect to certain sales, storage, use or other consumption of tangible personal property which would not otherwise be exempt from this tax while such sales, storage, use or other consumption remain subject to tax by the State under the provisions of Part 1 of Division 2 of the Revenue and Taxation Code, or;

b. Impose this tax with respect to certain sales, storage, use or other consumption of tangible personal property which would not be subject to tax by the state under the said provision of that code.

4. In Sections 6701, 6702 (except in the last sentence thereof), 6711, 6715, 6737, 6797 or 6828 of the Revenue and Taxation Code.

B. The word "Town" shall be substituted for the word "State" in the phrase "retailer engaged in business in this State" in Section 6203 and in the definition of that phrase in Section 6203.

1. "A retailer engaged in business in the District" shall also include any retailer that, in the preceding calendar year or the current calendar year, has total combined sales of tangible personal property in this state or for delivery in the State by the retailer and all persons related to the retailer that exceeds five hundred thousand dollars ($500,000). For purposes of this section, a person is related to another person if both persons are related to each other pursuant to Section 267(b) of Title 26 of the United States Code and the regulations thereunder.

8-8.10. PERMIT NOT REQUIRED. If a seller's permit has been issued to a retailer under Section 6067 of the Revenue and Taxation Code, an additional transactor's permit shall not be required by this ordinance.

8-8.11. EXEMPTIONS AND EXCLUSIONS.

A. There shall be excluded from the measure of the transactions tax and the use tax the amount of any sales tax or use tax imposed by the State of California or by any city, city and

county, or county pursuant to the Bradley-Burns Uniform Local Sales and Use Tax Law or the amount of any state-administered transactions or use tax.

B. There are exempted from the computation of the amount of transactions tax the gross receipts from:

1. Sales of tangible personal property, other than fuel or petroleum products, to operators of aircraft to be used or consumed principally outside the county in which the sale is made and directly and exclusively in the use of such aircraft as common carriers of persons or property under the authority of the laws of this State, the United States, or any foreign government.

2. Sales of property to be used outside the Town which is shipped to a point outside the Town, pursuant to the contract of sale, by delivery to such point by the retailer or his agent, or by delivery by the retailer to a carrier for shipment to a consignee at such point. For the purposes of this paragraph, delivery to a point outside the Town shall be satisfied:

a. With respect to vehicles (other than commercial vehicles) subject to registration pursuant to Chapter 1 (commencing with Section 4000) of Division 3 of the Vehicle Code, aircraft licensed in compliance with Section 21411 of the Public Utilities Code, and undocumented vessels registered under Division 3.5 (commencing with Section 9840) of the Vehicle Code by registration to an out-of-Town address and by a declaration under penalty of perjury, signed by the buyer, stating that such address is, in fact, his or her principal place of residence; and

b. With respect to commercial vehicles, by registration to a place of business out-of-Town and declaration under penalty of perjury, signed by the buyer, that the vehicle will be operated from that address.

3. The sale of tangible personal property if the seller is obligated to furnish the property for a fixed price pursuant to a contract entered into prior to the operative date of this ordinance.

4. A lease of tangible personal property which is a continuing sale of such property, for any period of time for which the lessor is obligated to lease the property for an amount fixed by the lease prior to the operative date of this ordinance.

5. For the purposes of subparagraphs (3) and (4) of this section, the sale or lease of tangible personal property shall be deemed not to be obligated pursuant to a contract or lease for any period of time for which any party to the contract or lease has the unconditional right to terminate the contract or lease upon notice, whether or not such right is exercised.

C. There are exempted from the use tax imposed by this ordinance, the storage, use or other consumption in this Town of tangible personal property:

1. The gross receipts from the sale of which have been subject to a transactions tax under any state-administered transactions and use tax ordinance.

2. Other than fuel or petroleum products purchased by operators of aircraft and used or consumed by such operators directly and exclusively in the use of such aircraft as common carriers of persons or property for hire or compensation under a certificate of public convenience and necessity issued pursuant to the laws of this State, the United States, or any foreign government. This exemption is in addition to the exemptions provided in Sections 6366 and 6366.1 of the Revenue and Taxation Code of the State of California.

3. If the purchaser is obligated to purchase the property for a fixed price pursuant to a contract entered into prior to the operative date of this ordinance.

4. If the possession of, or the exercise of any right or power over, the tangible personal property arises under a lease which is a continuing purchase of such property for any period of time for which the lessee is obligated to lease the property for an amount fixed by a lease prior to the operative date of this ordinance.

5. For the purposes of subparagraphs (3) and (4) of this section, storage, use, or other consumption, or possession of, or exercise of any right or power over, tangible personal property shall be deemed not to be obligated pursuant to a contract or lease for any period of time for which any party to the contract or lease has the unconditional right to terminate the contract or lease upon notice, whether or not such right is exercised.

6. Except as provided in subparagraph (7), a retailer engaged in business in the Town shall not be required to collect use tax from the purchaser of tangible personal property, unless the retailer ships or delivers the property into the Town or participates within the Town in making the sale of the property, including, but not limited to, soliciting or receiving the order, either directly or indirectly, at a place of business of the retailer in the Town or through any representative, agent, canvasser, solicitor, subsidiary, or person in the Town under the authority of the retailer.

7. "A retailer engaged in business in the Town" shall also include any retailer of any of the following: vehicles subject to registration pursuant to Chapter 1 (commencing with Section 4000) of Division 3 of the Vehicle Code, aircraft licensed in compliance with Section 21411 of the Public Utilities Code, or undocumented vessels registered under Division 3.5 (commencing with Section 9840) of the Vehicle Code. That retailer shall be required to collect use tax from any purchaser who registers or licenses the vehicle, vessel, or aircraft at an address in the Town.

D. Any person subject to use tax under this ordinance may credit against that tax any transactions tax or reimbursement for transactions tax paid to a district imposing, or retailer liable for a transactions tax pursuant to Part 1.6 of Division 2 of the Revenue and Taxation Code with respect to the sale to the person of the property the storage, use or other consumption of which is subject to the use tax.

8-8.12. AMENDMENTS. All amendments subsequent to the effective date of this ordinance to Part 1 of Division 2 of the Revenue and Taxation Code relating to sales and use taxes and which are not inconsistent with Part 1.6 and Part 1.7 of Division 2 of the Revenue and Taxation Code, and all amendments to Part 1.6 and Part 1.7 of Division 2 of the Revenue and

DRAFT
for June 28, 2022, Town Council Meeting

Taxation Code, shall automatically become a part of this ordinance, provided however, that no such amendment shall operate so as to affect the rate of tax imposed by this ordinance.

8-8.13. ENJOINING COLLECTION FORBIDDEN. No injunction or writ of mandate or other legal or equitable process shall issue in any suit, action or proceeding in any court against the State or the Town, or against any officer of the State or the Town, to prevent or enjoin the collection under this ordinance, or Part 1.6 of Division 2 of the Revenue and Taxation Code, of any tax or any amount of tax required to be collected.

8-8.14. SEVERABILITY. If any provision of this ordinance or the application thereof to any person or circumstance is held invalid, the remainder of the ordinance and the application of such provision to other persons or circumstances shall not be affected thereby.

8-8.15. EFFECTIVE DATE. This ordinance relates to the levying and collecting of the Town transactions and use taxes and shall take effect immediately.

8-8.16. USE OF PROCEEDS AND APPROPRIATIONS LIMIT.

A. The proceeds from the transactions and use tax, imposed by this ordinance shall be for general governmental purposes of the Town and shall be received into the general fund of the Town. Nothing herein shall bind the Town to use the proceeds for any specific purpose or function.

B. The appropriations limit for the Town of San Anselmo will be increased one times (1x) the aggregate sum authorized to be levied as a tax in each of the years covered by this ordinance.

8-8.17. FISCAL ACCOUNTABILITY PROVISIONS. The Town shall include in its annual audit of the Town's financial operations by an independent certified public accountant, an accounting of the revenue generated by the San Anselmo Transactions and Use Tax, and how the revenue was used. Additionally, the Town's Capital Programs Monitoring Committee will review and report on the use of the general purpose revenues generated by the San Anselmo Transactions and Use Tax.

Section 3. TERMINATION DATE. The authority to levy the tax imposed by this ordinance shall expire _____.

Section 4. This Ordinance was approved for placement on the November 5, 2022, ballot by a two-thirds vote of all members of the San Anselmo Town Council. The Ordinance was adopted by the voters of the Town of San Anselmo at the Election held on the 8th day of November, 2022, by the following vote:

AYES:

NOES:

ABSENT:

_____
Mayor

DRAFT
for June 28, 2022, Town Council Meeting

Attest:_____
Town Clerk

DRAFT
for June 28, 2022, Town Council Meeting

RESOLUTION NO. _____

A RESOLUTION OF THE TOWN COUNCIL OF THE TOWN OF SAN ANSELMO CALLING AND GIVING NOTICE OF THE HOLDING OF AN ELECTION TO BE HELD NOVEMBER 8, 2022, AND REQUESTING THAT THE BOARD OF SUPERVISORS OF THE COUNTY OF MARIN CONSOLIDATE SAID ELECTION; AND AUTHORIZING THE TOWN CLERK OR HER DULY AUTHORIZED OFFICERS AND AGENCY TO CARRY OUT ALL THE NECESSARY PROCEDURES FOR SAID ELECTION SUBMITTING TO THE VOTERS THE QUESTION RELATING TO A SPECIAL TAX FOR LIBRARY SERVICES

WHEREAS, the Town of San Anselmo is a wonderful place to live, raise a family and retire, with great local schools, quality public services and stunning natural beauty; and

WHEREAS, the San Anselmo Library is an important community resource that provides access to books, programs and technology for children, families and seniors in San Anselmo; and

WHEREAS, in 2010 local voters approved a parcel tax measure that provides dedicated funding to support the San Anselmo Library to maintain library operating hours, increase collections and provide programming for children, families and seniors; and

WHEREAS, each year since it was approved by voters, the Library Parcel Tax Oversight Committee has reviewed the use of funds and confirmed they have been spent in accordance with the voter approved expenditure plan; and

WHEREAS, if the approximately $320,000 in annual funding from the library services parcel tax expires, cuts to operating hours and programs at San Anselmo Library will be necessary; and

WHEREAS, the Town of San Anselmo seeks to renew the existing San Anselmo Library parcel tax, which expires on June 30, 2024, at the rate of $70 per year with a 3% annual increase to account for inflation; and

WHEREAS, all money raised by the measure may only be used to fund local library services in San Anselmo and cannot be taken away by the State; and

WHEREAS, the measure to renew the library services parcel tax would require the same strict fiscal accountability provisions as required by the current measure, including an independent citizens' oversight committee, mandatory financial audits and annual public spending disclosure to the community; and

DRAFT
for June 28, 2022, Town Council Meeting

WHEREAS, state law authorizes the Town to impose a special tax to fund library services only where 2/3 of the voters voting in an election approve the tax (Cal. Gov. Code § 53717(a); 53722; 50077(a)); and

WHEREAS, the Town Council conducted a public hearing on the Special Library Services Tax at its meeting of July 26, 2022; and

WHEREAS, the Town Council desires to submit to the qualified voters of the Town of San Anselmo at the Election to be held in the Town on November 8, 2022, the ordinance attached hereto as Exhibit A containing a ballot measure to adopt a Special Library Services Tax of $70.00 per year per real estate parcel located in San Anselmo with a three percent (3%) annual cost of living increase, for a period of nine (9) years, beginning on July 1, 2024, to augment money from the Town of San Anselmo's funding of library services and with expenditures monitored by an oversight committee; and

WHEREAS, it is desirable that the election be consolidated with the statewide election to be held on the same date and that within the Town, the precincts, polling places, and election officers of the two elections be the same; and

WHEREAS, it is desirable that the Elections Department of the County of Marin canvass the returns of the Election and that the Election be handled in all respects as if there were only one election.

NOW, THEREFORE, THE TOWN COUNCIL OF THE TOWN OF SAN ANSELMO, CALIFORNIA, DOES RESOLVE, DECLARE, DETERMINE, AND ORDER AS FOLLOWS:

Section 1. That pursuant to the requirements of the laws of the State of California relating to General Law Cities, there is called and ordered to be held in the Town of San Anselmo, California, on Tuesday, November 8, 2022, an election.

Section 2. That pursuant to the requirements of Section 10403 of the Elections Code, the Board of Supervisors of the County of Marin is hereby requested to consent and agree to the consolidation of said election.

Section 3. That the Town Council, pursuant to its rights and authority, does order submitted to the voters at the election the following question:

To continue expiring funding for San Anselmo Library to maintain library operating hours; increase book/ ebook collections; maintain programs for children, families, seniors/ people with disabilities; and maintain free internet access, computers/technology, shall the measure be adopted extending the existing San Anselmo library services tax at the existing rate of $70 per parcel, providing $320,000 annually, for nine years, with annual adjustments, mandatory audits, independent citizens' oversight and all funds locally controlled for San Anselmo Library?	Yes
	No

Section 4. The text of the proposed ordinance to be submitted to the voters is attached hereto as Exhibit A.

DRAFT
for June 28, 2022, Town Council Meeting

Section 5. The Town acknowledges that the consolidated election will be held and conducted in the manner prescribed in Section 10418 of the Elections Code.

Section 6. Pursuant to California Elections Code Section 9280, the Town Clerk shall transmit a copy of the measure to the Town Attorney who shall prepare an impartial analysis of the measure in accordance with said Section 9280. Arguments for and against said measure may be filed in accordance with applicable provisions of the law. Pursuant to California Elections Code Section 9285, the provisions of which are hereby adopted, when the Clerk has selected the arguments for and against the measure which will be printed and distributed to the voters, the Clerk shall send copies of the argument in favor of the measure to the authors of the argument against, and copies of the argument against to the authors of the argument in favor. The rebuttal arguments shall be filed with the Town Clerk not more than 10 days after the final date for filing direct arguments. Rebuttal arguments shall be printed in the same manner as the direct arguments. Each rebuttal argument shall immediately follow the direct argument that it seeks to rebut. The text of the measure shall be printed on the ballot in the voter information portion of the sample ballot.

Section 7. That the Marin County Election Department is authorized to canvass the returns of said election. The election shall be held in all respects as if there were only one election, and only one form of ballot shall be used.

Section 8. That the Marin County Board of Supervisors is requested to issue instructions to the County Elections Department to take any and all steps necessary for the holding of the consolidated election.

Section 9. That the Town Clerk shall certify to the passage and adoption of this Resolution and enter it into the book of original resolutions.

Section 10. Pursuant to California Elections Code Section 14212, the polls for the election shall be open at 7:00 a.m. on election day and shall remain open continuously from that time until 8:00 p.m. of the same day, when the polls shall be closed, except as provided in said Section 14212.

Section 11. That in all particulars not recited in this resolution, the election shall be held and conducted as provided by law for holding municipal elections.

Section 12. That notice of the time and place of holding the election is given and the Town Clerk is authorized, instructed, and directed to give further or additional notice of the election, in the time, form, and manner as required by law.

Section 13. That the Town Clerk is hereby directed to file a certified copy of this resolution with the Board of Supervisors and the Election Department of the County of Marin.

Section 14. This resolution shall take effect immediately.

I, the undersigned hereby certify that the foregoing is a full, true, and complete copy of a resolution duly passed and adopted by the Town of San Anselmo Town Council at a regular meeting thereof held on the 26th day of July, 2022, by the following vote:

AYES:

DRAFT

for June 28, 2022, Town Council Meeting

NOES:
ABSENT:
ABSTAIN:

Approved: _____
Mayor

ATTEST: _____
Town Clark

DRAFT

for June 28, 2022, Town Council Meeting

EXHIBIT A

TOWN OF SAN ANSELMO ORDINANCE NO. _____
AN ORDINANCE OF THE PEOPLE OF THE TOWN OF SAN ANSELMO
ADOPTING A SPECIAL LIBRARY SERVICES TAX BY AMENDING TITLE 8, CHAPTER 7 "SPECIAL LIBRARY SERVICES TAX" OF THE SAN ANSELMO MUNICIPAL CODE

DRAFT
for June 28, 2022 Town Council Meeting

TOWN OF SAN ANSELMO ORDINANCE NO. _____
AN ORDINANCE OF THE PEOPLE OF THE TOWN OF SAN ANSELMO ADOPTING A SPECIAL LIBRARY SERVICES TAX BY AMENDING TITLE 8, CHAPTER 7 "SPECIAL LIBRARY SERVICES TAX" OF THE SAN ANSELMO MUNICIPAL CODE
(November 8, 2022, Ballot Measure)

THE PEOPLE OF THE TOWN OF SAN ANSELMO DO ORDAIN AS FOLLOWS:

SECTION 1. AMENDMENTS TO CODE. Effective July 1, 2024, Chapter 7 of the San Anselmo Municipal Code, entitled "Special Library Services Tax", shall be repealed and replaced with the following amended provisions, subject to voter approval, as follows:

8-7.01 Title
This chapter shall be known as the "Special Library Services Tax Law of the Town of San Anselmo".

8-7.02 Necessity, Authority, and Purpose
The voters of San Anselmo hereby determine that the cost to maintain library operating hours; increase book/ ebook collections; maintain programs for children, families, seniors/ people with disabilities; and maintain free internet access, computers/technology and provide general library services for the residents of the Town of San Anselmo exceeds the amount of funds and revenues provided by the Town and generated from all other sources. The voters further determine that the levy of a Special Library Services Tax of $70.00 (seventy dollars and no cents), with a three percent (3%) annual cost of living increase, on each real estate parcel located in the Town of San Anselmo for a period of nine (9) years, when added to all other current library funding and revenues, would be sufficient to maintain an adequate level of library services. Accordingly, a tax is imposed by this chapter pursuant to California Government Code Section 37100.5.

8-7.03 Tax Imposed
A Special Library Services Tax of $70.00 (seventy dollars and no cents), with a three percent (3%) annual cost of living increase, on each real estate parcel located in the Town of San Anselmo, is hereby imposed effective July 1, 2024, and levied annually for a period of nine (9) years through and including June 30, 2033.

8-7.04 Impact of Town Funding of the Library on the Tax
The express purpose of this tax is to augment funding currently provided by the Town of San Anselmo, and not to supplant or replace such funding. Therefore, if during the term of the tax set forth in Section 8-7.03, the Town should determine that conditions warrant a reduction in its annual funding of the Library, the tax will continue to be levied only if the Town funding of the library remains above ninety

DRAFT
for June 28, 2022 Town Council Meeting

percent (90%) of the amount budgeted for the 2012-2013 fiscal year, which is $449,765. If the Town Council adopts a budget that reduces funding below that amount, this chapter will immediately become invalid in its entirety and the tax imposed by this Chapter will no longer be levied.

8-7.05 Inviolability of Tax Revenue
Revenue to the Library provided by this Special Library Services Tax may not under any circumstances be subject to appropriation to any purpose other than annual funding of the Library.

8-7.06 Increase of Appropriations Limit
Pursuant to California Constitution Article XIIIB, the appropriations limit for the Town of San Anselmo will be increased one times (1x) the aggregate sum authorized to be levied as a special tax in each of the years covered by this ordinance.

8-7.07 Use of County Records
The records of the Marin County Assessor as of March 1 of each year may be used to determine the actual use of each parcel of real property for the purpose of determining the tax imposed by this chapter.

8-7.08 Personal Liability
The tax levied and imposed by this chapter shall be collected by the Marin County Tax Collector at the same time as, and along with, the property taxes collected by the Marin County Tax Collector. However, the tax shall not become a tax lien on the property against whose owner the tax is assessed. The owner of the property shall be personally liable for nonpayment of the tax.

8-7.09 Deposit and Use of Funds from Special Library Services Tax Fund
All proceeds from the taxes imposed and levied by this chapter shall be paid into the "Special Library Services Tax Fund" to be used exclusively to maintain library operating hours; increase book/ ebook collections; maintain programs for children, families, seniors/ people with disabilities; maintain free internet access, computers/ technology and provide general library services.

8-7.10 Partial Invalidity
If any section, subsection, sentence, phrase, or clause of this chapter is for any reason held by any court to be invalid, such invalidity shall not affect the remaining portions of this chapter. The voters hereby declare that they would have adopted this chapter, and each section, subsection, sentence, phrase, or clause thereof, irrespective of whether any one or more sections, subsections, sentences, phrases, or clauses be declared for any reason invalid.

8-7.11 Rebates/Tax Equity Board

DRAFT
for June 28, 2022 Town Council Meeting

The Tax Equity Board established by resolution of the Town Council shall receive and act upon applications for full or partial rebates for persons claiming inability to pay the tax provided for in this chapter.

8-7.12 Exemptions
Improved property used exclusively for educational, scientific, charitable, or religious purposes owned and operated by institutions, foundations, or corporations organized and operated for educational, hospital, scientific, charitable, or religious purposes shall be granted an exemption to the tax imposed by this chapter on proof that any such organization has first qualified as an exempt organization under California Revenue and Taxation Code section 23701 (c) and United States Internal Revenue Code section 501.

8-7.13 Penalty for Disclosure of Information on Applications for Rebate of Special Library Services Tax
Any person disclosing the name of any person or any financial information obtained from an application for rebate of a Special Library Services Tax shall be guilty of an infraction.

8-7.14 Fiscal Accountability
The Town shall prepare an annual report pursuant to California Government Code sections 50075.1 and 50075.3. The report will contain the amount of Special Library Services Tax funds collected and expended, as well as the status of any project funded by the special tax. Additionally, the Town Council shall establish a Library Tax Oversight Committee to review and report on the use of the revenues generated by Special Library Services Tax.

Section 2. EFFECTIVE DATE
This ordinance relates to the levying and collection of the Town of San Anselmo Special Library Services Tax and shall be in full force and effect ten (10) days after the certification by the Town Council of the election returns indicating passage of the Ordinance by two-thirds of the voters casing votes in the election. The Special Library Services Tax will be assessed beginning fiscal year 2024-2025.

Section 3. APPROVAL
This Ordinance was approved for placement on the November 8, 2022, ballot by a _____ vote of all members of the Town Council. The Ordinance was adopted by the voters of the Town of San Anselmo at the Municipal Election held on November 8, 2022, by the following vote tally:

YES:

NO:

DRAFT

for June 28, 2022 Town Council Meeting

_____

Town of San Anselmo Mayor

Attest:

_____

Town Clerk

525 San Anselmo Avenue
San Anselmo, CA 94960

Town of San Anselmo

Staff Report

TO: Town Council | 6/28/2022 | **Item #:** 5.

FROM:
Sean Condry, P.E., Director of Public Works

SUBJECT:
Review and Provide Guidance Regarding Regulations of the Town's Parklet Program

RECOMMENDATION

That Town Council provide guidance to staff regarding the status of Parklets in San Anselmo.

INTRODUCTION

Upon direction from the Council, in November 2021 staff presented a proposed parklet ordinance and guidelines for the Council's consideration. The Council heard public comment and directed staff to return at a later date for further consideration of long term parklets. Now, staff returns to the Council seeking guidance and direction regarding the desire to implement a long term parklet program, and if so, under what general parameters.

BACKGROUND AND DISCUSSION

A. History of Parklets in San Anselmo

To serve the community and local business during Covid, the Town of San Anselmo swiftly implemented a temporary Outdoor Activities Program in the Spring of 2020 that authorized outdoor dining and retail activities in on-street parking locations. Parklets developed under this temporary program have enlivened and activated the downtown area and increased pedestrian activity and a sense of community. In addition to the parklets, the Town started closing San Anselmo Avenue on weekend nights with live music and added the new Creek Park picnic area. The closing of San Anselmo Avenue, the creation of the Creek Park picnic area, and the parklets have come together to create a place where residents and visitors from all over come to San Anselmo to relax, shop, and dine, making the Town a destination to be. Without action from the Council, the parklets will not be allowed once the State of Emergency due to Covid is lifted.

Parklets repurpose public space, such as on-street parking, into areas for public and commercial use. The development of parklets, particularly for outdoor dining and retail purposes, dramatically expanded at the onset of the Covid-19 pandemic as a way to allow restaurants and retail businesses safely operate outdoors. Beyond responding to Covid-19, parklets provide benefits such as increasing outdoor community space, promoting walkability, and encouraging pedestrians to linger in business areas, as we have all seen.

B. Public Outreach and Participation

Over approximately the last year, Town has held three community workshop meetings to discuss parklets - on May 11 and May 27, 2021, and more recently on April 14, 2022. On September 28, 2021, and November 9, 2021, parklets were brought before Town Council to consider a long-term program, see Attachments 1 and 2, respectively. The Economic Development Committee also discussed parklets on February 9 and September 14, 2021. Prior to the above meetings parklets have been discussed with Council in relation to Covid and the Urgency Ordinance allowing temporary parklets.

At the community meetings various opinions were heard for and against parklets. The biggest objection has come from some merchants between Tunstead Avenue and Tamalpais Avenue who are concerned about the loss of parking, line of sight and other issues. To address the parking concerns, the Town conducted a parking study, Attachment 3.

The Parking Study key findings were that during peak hours for parking downtown north, San Anselmo Avenue from Ross Avenue to San Rafael Avenue:

1. There are over 138 spaces available.
2. The highest occupancy rates are in the 2-hour zones.
3. 70% of the vehicles stayed less than 1 hour in the 2-hour zones.

Based on this information, staff believes there is adequate parking, but it can be better managed. The main recommendations of the Parking Study are:

1. Increase enforcement on San Anselmo Avenue *(General Recommendation).*
2. Increase available 2-hour spaces by converting on-street Magnolia Avenue, southbound SFD (Hub to Tunstead) and Creek Park Lot from 4-hour to 2-hour (removal of Merchant spaces) *(G-1, G-2, CP-1, CP-2*). 71 2-hour spaces
3. Install Pay Stations on San Anselmo Avenue from San Rafael Avenue to Tunstead Avenue to reduce occupancy rates in this section *(SA-2).*

If long term parklets are implemented, staff recommends implementing all of the above recommendations.

A majority of community public comments received by the Town have been in favor of parklets. First, at the community meetings, a majority of public comment supported parklets. At the April 14, 2022, meeting, approximately 25 people spoke and about 80% were in favor of parklets long term. Second, in addition to the community meetings the Town had a survey with over 500 people responding (Attachment 4), and overwhelmingly 90% of the 428 residents who participated supported long term parklets. Similarly, visitors supported long term parklets by 80 percent. Business owners were approximately evenly split in favor and against parklets. It is notable that in the survey both residents and visitors by 80% and 70% respectively, were not concerned about parking. Business owners were again split 50/50 over

their concern for parking.

Staff suggests that the findings of the survey and community meetings seem to indicate that the community as a whole values the vibrancy and life parklets have brought to the Town and is less concerned about parking.

C. Other Jurisdictions

Many cities and towns have adopted long term parklets while others are still trying to determine how, or whether, to move forward. For example, recently the City of Healdsburg with a similar population size of San Anselmo passed a new "Ongoing Parklet Program", Attachment 5, which lays out the rules and guidelines for parklets. Similar to the draft guidelines brought to Council on November 9, 2021, it requires that 50% of the sidewalls be open, and allows roofs/canopies. Safety and ADA requirements are included. In addition, Healdsburg charges a $1.50 per square foot monthly fee for the private use of the parking spaces, and also includes an annual staff administrative fees of $2,400. (i.e., a 352 sq. ft. space x $1.50 x 12 months = $6,336; plus $2,400 = $8,736 annual fee.) Healdsburg also provides that a maximum of 5% of the public parking spaces may be used for parklets.

Seattle adopted a parklet program similar to San Francisco which now has over 2,000 parklets, but with a twist. Instead of making them private only they are a hybrid, both public and private, and they call them Streateries. For example, during business hours customers use the parklets, and during other times they are open to the public. This may be something that the Town wants to look into too.

D. Direction Sought

Based on all of the information above, community meetings, and Council meetings to date, staff has the following options to be considered by Council.

Option 1: Permit Long Term Parklets

Staff would come back to Council with draft guidelines and an ordinance to allow for long term parklets. Some items to be considered include the following:

1. Permit parklets in downtown areas, with the same or different rules for each, for example: San Anselmo Avenue from Bolinas Avenue to Ross Avenue, and from Ross Avenue to San Rafael Avenue, Sir Francis Drake Boulevard, and the Greenfield Avenue corridor.
2. Put a cap on the number of spaces used, such as 5%, which is similar to Healdsburg. With 538 spaces in downtown north from San Rafael Avenue to Ross Avenue, only about 26 spaces or approximately 13 parklets would be allowed if each one were two spaces. On San Anselmo Avenue from Bolinas Avenue to Ross Avenue, there are 255 public parking spaces, which would only allow about 12 parking spaces to be used or 6 parklets if

each business used two per parklet.

3. Consider protection from the elements such as rain and sun by allowing canopies or roofs. Roofing is seen as essential for businesses that have parklets, and designs can be made to be low-profile and maintain traffic and bicycle visibility.
4. Permit duration: should it be 1 year, 3 years, or more with an annual review.
5. Fee structure for use of right of way.
6. Should parklets be private only, or public and private? During business operation the parklets could be private only and during closure the public would have the right to use them or some combination thereof.

Option 2: Parklets Seasonal Only

1. Allow parklets but they must be removal during winter months.
2. Who pays for cost of installation and removal? Public funds set aside to assist?

Option 3: Parklets Discontinued

1. Parklets would no longer be allowed after a date set by Council, or after the expiration of the current Covid State of Emergency.

CONCLUSION

Staff recommends that Council approve Option 1 to permit long term parklets based on broad support of the community, along with the vibrancy and activation that parklets bring to the Town. While parking and some other items have been raised as a concern, the Parking Study has shown that parking in and of itself is not an issue, and both the residents and visitors support parklets based on surveys.

GENERAL PLAN AND CLIMATE ACTION PLAN CONSISTENCY

A Parklet Ordinance and Parklet Guidelines are consistent with the goals and policies of the Town's General Plan to preserve, maintain, and enhance the character and quality of life in San Anselmo; and are consistent with the Town's Climate Action Plan since it will encourage pedestrian use of the downtown area and utilize outdoor spaces.

CEQA

A Parklet Ordinance and Parklet Guidelines are categorically exempt from the California Environmental Quality Act ("CEQA") pursuant to CEQA Guidelines section 15301(c), as a minor alteration to existing public or private facilities.

TOWN OF SAN ANSELMO
STAFF REPORT

For the Meeting of September 28, 2021

TO: Town Council

FROM: Sean Condry, Public Works Director

SUBJECT: Council Consideration of Permanent Parklet and Streetlet Program.

RECOMMENDATION

That the Town Council consider the establishment of a permanent parklet and streetlet program and give direction to staff.

BACKGROUND

A parklet repurposes public space, such as vehicle parking, into an area for community use, providing amenities such as outdoor seating and additional pedestrian areas. In most cases, a parklet is an expansion of a sidewalk that utilizes parking spaces to create a public area. Parklets benefit local businesses by providing additional seating for patrons and encouraging walkability, while enhancing the aesthetics of the community. Although parklets are privately constructed and maintained, they are open to the public and intended for community use.

A streetlet is similar to a parklet, but are intended for private use by restaurants, businesses, and their patrons. Streetlets typically have a fee associated with it to use the public right-of-way.

In response to COVID-19, the Town implemented its Outdoor Activities Program that authorizes temporary outdoor dining and business activities in compliance with social distancing requirements. Under this temporary program, an existing business or restaurant may apply for a Temporary Outdoor Activities Permit, which allows them to operate outdoors on property such as parking spaces. Staff has received positive feedback about this program from both businesses and members of the community. Many retailers have made significant investments to create temporary attractive parklets that benefit the Town by boosting retail and restaurant activity and providing increased outdoor pedestrian space. Many businesses would like to keep the parklets long-term or even build new ones, so they are asking the Town about a long term policy.

Because the current parklets in San Anselmo are being operated on a temporary basis in association with the pandemic response, staff seeks direction whether the Council would wish to develop a permanent parklet and streetlet program. A permanent program would provide more stability and certainty for businesses and restaurants that have invested in outdoor improvements. Additionally, a permanent parklet and streetlet program provides community benefits that extend

beyond the current need to accommodate COVID-19 social distancing requirements. Parklets provide outdoor community space, encourage pedestrians to linger in business areas, and promote walkability, thereby activating the area.

The Town has held three public meetings with the Economic Development Committee on February 9, May 11 and September 14 to explore the idea of a permanent parklet and streetlet program. In addition, the Town sent out a survey that had over 500 respondents (see Attachment 1). Over 90% of residents would like to see parklets and streetlets become long term, and 53% of business owners and 79 % of visitors would also like to see these spaces become permanent. When asked if parking was a concern, 80% of residents, 51% of businesses, and 71% of visitors, said 'no'. As shown in the parking study, at the peak of parking demand midday there are almost 250 parking spaces available in the main downtown corridor (129 north of Ross Avenue, and 115 south of Ross Avenue).

Like San Anselmo, many jurisdictions have adopted parklet and streetlet programs in response to the continuing COVID-19 pandemic to help support local businesses. Additionally, several California jurisdictions have successful permanent programs that were started prior to the COVID-19 pandemic as a way to revitalize outdoor public space. Below please find a summary of some common factors that parklet and streetlet programs share, as well as links to example parklet programs for reference. An outline of the Town's temporary program is also summarized. Staff seeks direction regarding development of a permanent parklet and streetlet program. Upon Council direction, staff is prepared to return with more detailed information and proposals for the Council's consideration.

DISCUSSION

A. San Anselmo Temporary Parklets.

In response to COVID-19, the Town began a temporary parklet program allowing restaurants and business to utilize outdoor space. By way of summary, a business must enter into an encroachment agreement with the Town, and receive an Outdoor Activities permit.[1] Allowable locations include public rights-of-way or public property, determined by the discretion of the Town Manager. Application requirements include a statement of intended use, a health and safety plan, proof of a Town business license, a State Alcohol Beverage Control license (if applicable), certificate of insurance, written consent of property owner/tenants sharing space, site plans, and a photograph of the proposed location. Noted above, Town staff has received positive feedback regarding parklets by both businesses and the community.

B. Common Parklet and Streetlet Features.

Parklet and streetlet programs are operated in a variety of ways, with the majority involving the requirement of an encroachment permit, and satisfaction of detailed application requirements and standards. Some common aspects of parklets and streetlets are included below.

[1] By way of information, staff is also in the process of developing updated encroachment permit procedures for the Council's future consideration.

1. Location. Parklets and streetlets are typically limited to a core downtown area where speed limits are 25 MPH or lower, but there may be exceptions to this rule. Some jurisdictions limit the density of parklets by, for example, prohibiting their location if directly across the street from one another.

2. Design Standards. Design standards include factors for aesthetics and safety. For example, parklet improvements may not impede drainage, block utility or manhole covers, and must be constructed to allow emergency access. Locations in downtown San Anselmo are in the floodway and floodplain, and thus have other issues that need to be addressed. To this end, the Town has completed a geomorphic study to determine the impacts of flooding in relation to the parklets. ADA compliance is also required. Additional space may be required between the outside barrier and traffic. Improvements may not block visibility.

Specific design standards are included, and aesthetic design standards vary by jurisdiction. For example, some programs allow overhangs, canopies, or vertical elements. Container landscaping and planter elements are often encouraged. Parklets, since they are for public use, would need to be signed as such, but streetlets would primarily be for the exclusive use of the adjacent business.

3. Application and Approval Process. Most parklet and streetlet applications are approved at a staff level after a review for compliance with established standards and application requirements, and the issuance of an encroachment permit. The Public Works department typically is the lead department. However, established guidelines would ensure that all fire, building, planning and codes are met along with any other County or State requirements. Some jurisdictions require both a parklet/streetlet permit and an encroachment permit, while others rely only on an encroachment permit. Permits are reviewed annually. A jurisdiction retains discretion to require removal of the parklet or streetlet and improvements at any time with reasonable notice to the owner.

Prior to submittal of a complete application, many jurisdictions require an initial meeting with staff, which includes preliminary application information such as a project description, photos of the site, and an initial site plan. Once staff gives preliminary approval, an applicant may submit complete application materials, including an application for an encroachment permit and appropriate fees. Guidelines would be established that help simplify the process for the applicant and would include the following information:

1. Design standards such as color/finishes, transparency requirements, height, etc.
2. Code requirements for planning, building, fire, and public works.
3. Maintenance requirements.
4. Removal requirements.
5. A sign-off from the tenant and landlord for use of the space, along with defense and indemnity agreements.
6. Fees associated with parklets and streetlets

Application requirements include consideration of community and neighbor approval. Typically, neighbor letters of support are considered, but there is not a requirement of unanimous neighbor

support. Programs may require evidence of neighbor outreach. Many programs have requirements that a notice be posted on-site to allow community input to staff. For efficiency, many jurisdictions do not have a public hearing, but rather determinations are made at a staff level. Applicants may also be required to submit a maintenance plan reviewed by the public works department.

The encroachment agreement includes insurance and indemnification provisions, providing protection for the Town. Some require the posting of a bond. After issuance of an encroachment permit, the parklet/streetlet can receive final approval and construction may begin.

C. Parklet Programs.

Below please find links to other jurisdictions' parklet programs.

- San Francisco The City of San Francisco has a long-established and successful parklet program, and had an expanded temporary parklet program in response to COVID-19. On July 13, 2021, parklets were made permanent. San Francisco's program includes highly detailed design and safety guidelines that have been used as model for other programs in California. In line with the proposed streetlet idea, San Francisco has a Cafes, Tables and Chairs program that is generally located on sidewalks, but they typically have wider sidewalks than the Town. The link to this program is here.
- San Rafael. The City of San Rafael has extended its temporary outdoor commercial parklet program for existing permit holders through November 2022.
- Los Altos Los Altos adopted initial parklet program in 2019. This program is open to restaurants to convert adjacent parking stalls to outdoor dining areas.
- City of Westwood The City of Westwood established its parklet program in 2018.
- Morgan Hill Morgan Hill has an existing parklet program that was updated in October 2020.
- Sacramento The City of Sacramento also has an established parklet program.
- Los Gatos Los Gatos has a pilot parklet program, which was temporarily expanded in response to COVID-19.

FISCAL IMPACT

Currently, the Town does not charge a fee to applicants for parklets during Covid. However, if a permanent program is established, staff would recommend a fee for parklets and streetlets. Since parklets would be a public space, the fee could be minimal (i.e., to cover staff time only). However, since streetlets would be private (if approved by Council) staff would recommend a fee for private use of the public right-of-way (fee could be consistent with parking fees in nearby lots, or future on-street parking fees if approved by Council)..

For example, if parking on San Anselmo Avenue was set at $1.50 per hour with a 75% occupancy 6 days a week for approximately 10 hours a day, a suggested cost could be $250 per parking space. Typical parklets and streetlets would take two spaces so the monthly cost would be $500 or $6,000 per year. In looking at the approximate area of two parking spots at about 280

square feet, the cost per square foot would be about $1.80. Fees collected could either go into the general fund or be used for street beautification projects.

Another option to consider is the utilization of a portion of the Town's American Recovery Act funds to offer grants to existing and new parklets and streetlets to help offset the costs of construction.

CONCLUSION

Staff recommends that the Council consider the establishment of a permanent parklet and streetlet program and give direction to staff.

CEQA AND CONSISTENCY WITH CLIMATE ACTION PLAN 2030

Staff finds that a parklet and streetlet program would be categorically exempt from environmental review under the California Environmental Quality Act ("CEQA") pursuant to CEQA Guidelines section 15301(c), as a minor alteration to existing public or private facilities involving negligible or no expansion of existing use.

Additionally, a parklet and streetlet program is consistent with the Town's Climate Action Plan since it will encourage pedestrian use of the downtown area, and will utilize outdoor spaces, likely using less energy for heating and cooling.

Respectfully submitted,

Sean Condry, P.E.
Public Works Director

Attachment San Anselmo Parklet Program Survey

TOWN OF SAN ANSELMO
STAFF REPORT

For the Meeting of November 9, 2021

TO: Town Council

FROM: Sean Condry, P.E., Public Works Director
Dmitriy Laptev, Public Works Project Coordinator
Emily Longfellow, Assistant Town Attorney

SUBJECT: Introduction and first reading of an Ordinance amendment to the Town of San Anselmo Municipal Code, Title 7 "Public Works" adding Chapter 14 "Parklets"; and adoption of a Resolution approving "Parklet Guidelines"

RECOMMENDATIONS

1. That the Town Council hold a public hearing to consider adoption of an Ordinance amendment to the Town of San Anselmo Municipal Code amending Title 7 "Public Works" adding Chapter 14 "Parklets"; and a Resolution approving "Parklet Guidelines", allowing permanent parklets.
2. Motion to read the Ordinance amendment by title only. The Town Clerk will read aloud the full title of the Ordinance.
3. Motion to approve the first reading of the Ordinance amendment and waive future readings of the Ordinance in its entirety.
4. Motion to adopt Resolution approving Parklet Guidelines.
5. Give direction to staff as necessary.

BACKGROUND

Parklets repurpose public space, such as on-street parking, into areas for public and commercial use. The development of parklets, particularly for outdoor dining and retail purposes, dramatically expanded at the onset of the Covid-19 pandemic as a way to allow restaurants and retail businesses to safely operate outdoors. Beyond responding to Covid-19, parklets provide benefits such as increasing outdoor community space, promoting walkability, and encouraging pedestrians to linger in business areas.

To serve the community and local business, the Town of San Anselmo swiftly implemented a temporary Outdoor Activities Program in the Spring of 2020 that authorized outdoor dining and retail activities in on-street parking locations. Parklets developed under this temporary program have enlivened and activated the downtown area, and increased pedestrian activity and a sense of community.

Staff has received positive feedback about the temporary parklet program by both businesses and members of the community, and survey results show that about 90% of Town residents, and about 56% of businesses, are in favor of permanent parklets. Additionally, a few businesses have made significant investments to create attractive parklets that benefit the Town by boosting retail and restaurant activity, and providing increased outdoor pedestrian space.

Because the current parklets in San Anselmo are operating on a temporary basis, on September 28, 2021, the Town Council held a public hearing to consider the adoption of a permanent parklet program and give direction to staff. After hearing feedback from the community and holding a discussion, a majority of the Town Council directed staff to return with guidelines for allowing permanent parklets.

Pursuant to this direction, staff now returns with a proposed draft Parklet Ordinance and associated Parklet Guidelines that will allow the development of permanent parklets. Both private commercial and public parklets are allowed.

DISCUSSION

The proposed permanent parklet program has two components that work together. First, the Parklet Ordinance broadly authorizes permanent parklets upon the approval of an encroachment permit and payment of fees, and contains standard requirements. Second, the Parklet Guidelines provide a more detailed description of requirements and criteria, including design and safety standards. Parklet applications will be reviewed by the Public Works Director or his designee. The Parklet Guidelines give the Town the ability to review and condition each application as appropriate for the site and neighbors, considering issues such as safety and design. There would be no limit to the number of parklets the Town would approve.

Below please find a summary of the main points of the Parklet program. For ease of reference, Sections “A” through “E” below correspond with the headings in the proposed Parklet Guidelines.

A. Siting and Location

1. Location and Size Criteria

The location and siting of all parklets must take into consideration public safety, and the final parklet location must be approved by the Public Works Director or his designee based on the safety issues of each specific location. A parklet must leave at least a minimum 4-foot unobstructed adjacent sidewalk width to allow for pedestrian use, and the parklet may not interfere with the visibility of pedestrians, bicycles, or vehicles. Parklets would be allowed along the frontages of storefronts in commercial zones where the speed limit is no more than 25 miles per hour and may be allowed in areas with higher speed limits on a case by case basis.

Parklets shared with an adjacent business may be considered on a case-by-case basis as appropriate for the site, but the total parklet area may not exceed the frontage for the combined businesses. The proposed Parklet Guidelines contain requirements for the use of both parallel

and angled parking spaces, with a maximum of two parallel parking spaces or four perpendicular parking spaces allowed for each parklet. Corner locations and parklets adjacent to a crosswalk or driveways must provide sufficient lines of sight to ensure safety based on the particulars of each case. Parklets must be setback at least 1 foot from the edge of the adjacent lane of travel, and setback from adjacent parking spaces as necessary for safety and access purposes, depending on the site.

2. Fire and Safety Access

A parklet may not block or obstruct fire hydrants or public utilities. Additionally, fire and emergency access is required by either providing a 5-foot wide opening from the street to the walkway every two adjacent parklets, or by providing a door in the middle of an individual parklet. Finally, all parklets must satisfy the California Fire Code and related fire safety requirements.

B. Design

The design of a parklet includes four main components: 1) **a platform** to serve as an extension of the adjacent sidewalk; 2) **railings** that visually and physically define the parklet exterior; 3) **traffic safety protections**; and 4) **furnishings and fixtures** to serve customers or members of the public. Below, please find an overview of the requirements and standards for these components.

1. Platform Design

Platforms must be constructed to withstand wear, tear, and weather and treated with a non-skid coating. Outdoor carpeting/artificial grass, and poured concrete platforms, are prohibited. The platform threshold must be flush with the sidewalk or ramped, as appropriate for safety. The parklet must provide adequate access under the platform to allow for maintenance, repair, and gutter clearing. All platforms must provide adequate curbside drainage flow and may not block gutters.

Regarding flood safety, platforms must be designed and anchored to prevent flotation, collapse, or lateral movement and allow for the free flow of water in the floodway as required by FEMA. To ensure stability in the event of a high water event, platforms must be bolted or otherwise permanently affixed to the roadway for safety purposes. The platform must comply with applicable ADA and related legal requirements, including maintaining an accessible entry, wheelchair turning space, and wheelchair landing.

2. Railing and Enclosure Improvements

The parklet railing or enclosure provides the boundary between the parklet and the street and sidewalk It provides a safety barrier and also serves the aesthetic purpose of being visually appealing and appropriate to the surrounding area.

Parklets should have a notable, defined edge along the street front and adjacent parking stalls, which can include planters, railings, or similar improvements. Railings must be sufficiently stable (capable of withstanding 200-lbs. of force), and at least 36 inches in height, unless otherwise appropriate based on the site considering safety. Railings may not block the view of vehicle or pedestrian traffic, nor block traffic signals. Railings should be visually appropriate, and may not consist of lattice (wood or plastic,) or plastic or vinyl.

Staff seeks direction regarding overhead parklet coverings. Some jurisdictions allow overhead parklet coverings for weather protection. As a starting point for discussion, staff has included overhead covering requirements on page 5 of the Parklet Guidelines. As suggested, overhead coverings for weather protection are allowed. Materials could include canopies, awnings, or umbrellas. A minimum overhead clearance of 8 feet is required. Overhead coverings are not permitted over the sidewalk, nor may they extend over the parklet edge onto the street. Coverings must not significantly impede visibility.

3. Traffic Protections

Noted above, parklets shall provide a minimum one foot clearance from the lane of travel, as measured from the parking striping adjacent to the lane of travel. Parklets shall have vertical elements to make them visible to traffic, which may consist of posts or bollards, both which require reflective tape. Structural bollards may be required if deemed necessary for safety. Wheel stops in parklets located in parallel parking spaces may be required if appropriate and necessary for the safety of the site.

4. Furnishings and Fixtures

Parklet furnishings and fixtures provide elements for seating, dining, and related amenities such as heating and lighting. These components should be both safe and visually appealing.

First, with respect to appropriate aesthetics, plastic or vinyl outdoor furniture is not permitted. Built-in seating is encouraged and can be integrated in creative ways, including combining with planters, the structure, or other creative features within the parklet. Landscape elements must be included and may consist of elements such as a container planter that serves as a buffer along the street-facing edge, hanging planters, green walls, or similar features. Lighting is encouraged, and must not be directed towards the roadway to cause glare. String lights must be hung sufficiently to allow for safety clearance above the parklet platform and sidewalk.

Second, regarding safety, outdoor space heaters are allowed if approved for outdoor use, located in accordance with the manufacturer's safety instructions, and located from the edge of any overhead covering, foliage, or any flammable object per the manufacturer's requirements and the Building and Fire Code. Outdoor heaters must be stored inside when there is reasonable chance of a heavy rain event, including flooding. Movable furniture should be removed and stored after-hours, or locked with cables to the parklet structure. Wiring and chords must be exterior rated and may not create a tripping hazard. At no time should the Parklet be used for storage and furnishings may stay out if set up for their intended use only.

Staff seeks direction regarding signage. The Town's parklets currently include business signage, and many jurisdictions allow commercial signs on parklet fronts. As a starting point for discussion, staff has included language regarding parklet signage on page 6 of the Parklet Guidelines. As suggested, parklet signage is allowed if the total area does not exceed 6 square feet (24 x 36 inches). Illuminated signs are prohibited. Signage design must correlate with the signage on the primary building. Public parklets must have two Town-designated signs indicating that the space is open for general public use.

5. Other Design Criteria

All parklet materials should be constructed of durable materials that are aesthetically appropriate and in-keeping with the site, and may include materials such as steel, finished wood, and salvaged building materials. Visible pressure treated wood and plywood are not allowed. Sustainable and locally-sourced materials are encouraged. Use of plastic material is strongly discouraged.

C. Operational Standards

Operational standards govern the maintenance of a parklet. In general, the permittee must maintain the parklet in good condition and repair, and free from debris and damage. For safety, no outdoor food preparation is allowed, nor any open flame. Alcohol service is allowed if the business has a valid license from the California State Department of Alcohol and Beverage Control ("ABC") and the operator complies with all applicable ABC requirements.[1]

D. Permit Requirements

Note above, parklets will be allowed pursuant to an encroachment permit for parklet use, on a form and with submittals as required by the Public Works Department. Plan sets must also include the dimensions of the structure, location of adjacent utilities and curb drainage, and must meet all ADA requirements, comply with Building and Fire Codes, and all other applicable codes. Evidence of current insurance coverage is required, including all Town required insurance certificates and endorsements.

A permittee with a Temporary Outdoor Activities permit may continue to operate for an additional 12 months from the effective date of the Parklet Ordinance, after which time the parklet must comply with all requirements. Private parklets would operate during the same hours of operation as the sponsoring business, and would not be open to the public after-hours.

E. Enforcement, Emergencies, and Removal

It is important that parklets are maintained in compliance with Town rules and the conditions on each individual encroachment permit. As such, a parklet permittee who fails to comply with the Parklet Ordinance, Parklet Guidelines, and/or the conditions of the encroachment permit, may be

[1] In response to the popularity of parklets and to assist business, Governor Newsom recently signed legislation, Senate Bill 314 (the "Bar and Restaurant Recovery Act"), which extended many aspects of the Governor's emergency order regarding alcohol service, including alcohol service in parklet areas.

subject to violations and fines in the Town Code. The Public Works Director may also suspend or revoke a permit if it is determined that Town rules or encroachment permit conditions are being violated. When the operation or condition of a parklet constitutes an immediate hazard, such as during a flood event, the Town may immediately abate the hazard.

Upon the termination of the parklet, the permittee must remove all improvements and furnishings at its own expense, and return the space to its original condition. The permittee shall reimburse the Town for any expenses it may incur in removing or repairing any residual items or damage.

F. Fees

Staff seeks direction regarding fees. In allowing temporary parklets, the Town has not charged fees for the use of public parking spaces. As business activity transitions away from social-distancing requirements, parklets are no longer necessary for Covic-19 reasons, but have enhanced and activated the commercial areas of Town. The elimination of on-street parking spaces for the benefit of a private business warrants consideration of fees for the use of public space.

As proposed in the draft Ordinance, a permittee for a private parklet would be required to pay an application fee and an annual fee in an amount determined by Town Council Resolution. Public parklet are not subject to fees.

Regarding the application fee, staff suggests that a fee be based on staff hours spent to process the application.

Staff suggests that the annual parklet fee be based on the amount to cover the costs of the parking meter revenue lost to the parklet, and an amount to cover the costs of Town staff monitoring the permit.[2]

Any fee approval would require an amendment to the Town's Fee Schedule. Once directed, staff will return to the Town Council with a Resolution amending the fee schedule at a future date.

G. Insurance and Indemnification

Each permittee must maintain required insurance as set forth in the Parklet Ordinance, which will be included as a condition of the encroachment permit, with a combined general liability single limit of at least one million dollars per occurrence covering the permittee's operations in the parklet area. Additionally, the permittee will be required to defend, indemnify, and hold harmless the Town and associated parties from and against any claims of injury, damage, or loss resulting from the operation of the parklet.

[2] Please note that the amount of an application fee may not exceed the costs of processing the permit, and the amount of an annual fee may not exceed the Town's cost to administer the permit and the projected loss of parking revenue due to the loss of parking spaces that will be converted to parklets.

H. Temporary Extension

As noted above, any business operating a parklet under a Temporary Outdoor Activities Permit will be allowed to continue this use for an additional 12 months from the effective date of the Parklet Ordinance. After this time, any party who wishes to continue the parklet use may apply under the new rules and fees.

CONCLUSION

Staff recommends that the Town Council adopt the Parklet Ordinance and approve the Resolution to adopt the Parklet Guidelines. Alternatively, staff seeks direction regarding the proposed Parklet Ordinance and/or Parklet Guidelines. Staff also seeks direction regarding the establishment of a fee, which will be returned to the Town Council for consideration at a future date.

CEQA

The proposed Parklet Ordinance and the Parklet Guidelines are categorically exempt from the California Environmental Quality Act ("CEQA") pursuant to CEQA Guidelines section 15301(c), as a minor alteration to existing public or private facilities.

CONSISTENCY WITH GENERAL PLAN

The proposed Parklet Ordinance and the Parklet Guidelines are consistent with the goals and policies of the Town's General Plan to preserve, maintain, and enhance the character and quality of life in San Anselmo; and are consistent with the Town's Climate Action Plan since it will encourage pedestrian use of the downtown area and utilize outdoor spaces.

NOTICE

A copy of the public hearing notice for this item was published in the *Marin Independent Journal* newspaper.

Respectfully submitted,

Sean Condry, P.E., C.B.O
Public Works Director

Dmitriy Laptev
Public Works Project Coordinator

Emily Longfellow
Assistant Town Attorney

Attachment A: Ordinance Amendment to the Town of San Anselmo Municipal Code amending Title 7 “Public Works” adding Chapter 14 “Parklets”.

Attachment B: Town Council Resolution approving “Parklet Guidelines”.

Attachment C: Parklet Guidelines

TOWN OF
SAN ANSELMO
EST. 1907

DOWNTOWN PARKING STUDY

2019-2021

Administrative Draft

Town Council Meeting, September 28, 2021

Executive Summary:

Concerns about parking or the lack of parking have been ongoing in downtown San Anselmo for some time. Therefore, staff has completed a parking study to determine what the issues are, if any. Is there a lack of parking or does it need to be better managed and available parking made more apparent to downtown shoppers and residents alike?

Based on counts (in Fall 2019/Spring 2020 and Fall 2021), on-street vehicular parking along San Anselmo Avenue between San Rafael Avenue and Tunstead Avenue is at full capacity most of the day (10 A.M. to 8 P.M.), which is not surprising as it is the main artery through downtown and the easiest, thus the first, parking opportunities for visitors. The peak (highest occupancy rates) is around lunchtime. During this time (1 pm to 2 pm), the adjacent public lots and nearby streets are between 42 to 80 percent full, with 138 parking spaces available a short walk away from San Anselmo Avenue. There is a second peak around dinner time, however, many retail shops close at 6 pm and offices close around 5 pm. After 5 pm on weekdays, there are an additional 12 spaces available in the Town Hall employee lot, with another 8 available after 7 pm. There are also several spaces available after 6 pm along eastbound Tunstead Avenue (yellow curbed loading zone).

Opportunities to free up parking spaces for customers/visitors closest to San Anselmo Avenue include increasing the level of parking enforcement to encourage turnover, converting the merchant spaces in Creek Park to 2-hour public parking, changing some 4-hour zones to 2-hour zones, thus relocating the static merchant parking farther out, including the underutilized zones on San Rafael Avenue and southern Sir Francis Drake Boulevard.

Long term opportunities to reduce the high occupancy rate include installing pay stations on San Anselmo Avenue between San Rafael Avenue and Tunstead Avenue or Ross Avenue to reduce occupancy rates along the retail core and make parking easier for customers/visitors.

Overall staff recommends increasing the turnover of prime parking areas on the avenue by adding more 2-hour parking areas, removing merchant parking in the prime downtown area of Creek Park, and adding paid parking on San Anselmo Avenue (see Recommendations section).

Table of Contents

Executive Summary: i

1. Introduction 1

2. Existing Downtown Parking Conditions 2

2.1 Public Parking Supply 2

2.2 Public Parking Zones 3

3. Existing Parking Behavior 6

3.1 Parking Counts: 6

3.2 Parking Turnover 8

3.3 Findings 9

4. Existing Parking Management 9

4.1 Parking Pricing Policy, Supply and Collection Method 9

4.2 Merchant Parking: 10

4.3 Electric Vehicle Parking: 11

4.4 ADA Parking 11

4.5 Bicycle Master Plan: 11

4.6 Parklets: 12

4.7 Reimagine Creek Park: 12

5. Parking Revenues and Expenses 12

6. Parking Policy Options 13

7. Recommendations and Options: 15

7.1 General Parking Recommendations: 15

7.2 Location-Specific Recommendations: 15

8. Next Steps 16

Appendix: Parking Count Data 17

List of Tables

Table 1 Downtown NorthPeak Parking Occupancy by Time Restriction 6
Table 2 Downtown North Peak Parking Occupancy by Location 7
Table 3 Downtown South Peak Parking Occupancy by Time Restriction 7
Table 4 Downtown South Peak Parking Occupancy by Location 8
Table 5 Downtown Parking Turnover 9
Table 6 Marin County Parking Pricing 10
Table 7 Location-Specific Parking Policy Recommendations 15

List of Figures

Figure 1: Downtown Parking Study Area 2
Figure 2: Downtown North Parking 4
Figure 3: Downtown South Parking 5

1. Introduction

San Anselmo has multiple commercial and economic districts including along San Anselmo Avenue near Lansdale Park, at Saunders/Redwood/Laurel, on Sir Francis Drake (SFD) Boulevard (e.g., at Red Hill Shopping Center), SFD near the Hub, along Red Hill Avenue and Greenfield Avenue, along SFD from the Hub to Barber Avenue, as well as 'Downtown' on San Anselmo Avenue and side streets.

This vehicular parking study centers on the publicly available parking spaces in the commercial district in the downtown area: The study area encompasses San Rafael Avenue to the north, Bolinas Avenue to the south, Cedar Street to the west, and SFD to the east (see Figure 1). The available parking consists of public parking along streets, three public parking lots, as well as 29 private parking lots. The parking users consist of employees of shops and offices, residents, customers, visitors, deliveries, and contractors whose use varies from a few minutes to several days.

Parking in the downtown core area is primarily used by customers/visitors and merchants/employees (San Anselmo Avenue and the three public parking lots), as well as residents (on the side streets off of San Anselmo Avenue). Private lots are used by employees of the business/offices, and some are available to customers of those specific businesses. The private lots are typically signed indicating that public parking is not allowed. Parking is also used by contractors (working both inside buildings and in the street), as well as landscapers and delivery vehicles.

As San Anselmo does not allow overnight parking on town streets; almost all residential parking is required to be on private property. (There are a number of residents with overnight parking passes that allows them to park on the street overnight). Merchants can purchase parking stickers to allow all-day parking in 4-hour zones, which creates a ring of static vehicles during the day, primarily from 10 am to 6 pm. Parking use varies from several minutes (delivery vehicles or a quick pickup of food or coffee) to all day (employees or merchants). Contractors may need to park in close proximity to their work location, while others can park and either walk or carpool.

The primary challenge in parking in downtown San Anselmo is that when no spaces are available on San Anselmo Avenue, drivers often "circle the block" to wait for an open space, however, this takes the driver towards Cedar Street and residential areas that may not be familiar to the driver, resulting in frustration. Many residents and business owners have raised concerns about a perceived scarcity and difficulty in finding available public parking in downtown San Anselmo. Concerns also include lack of enforcement of parking duration limits, use of prime spaces by merchant/restaurant employees, lack of signage to direct users to available parking, and overall lack of supply of public parking spaces.

This report outlines the existing parking inventory, occupancy survey and duration survey (both pre-COVID (Fall 2019 and Spring 2020) and September 2021) as well as recommended modifications and strategies to optimize parking in downtown San Anselmo.

2. Existing Downtown Parking Conditions

The following section summarizes the Town's existing inventory of on and off-street public parking.

2.1 Public Parking Supply

Vehicular parking in downtown San Anselmo is located in both commercial and residential areas. For the purposes of this parking study, staff has broken up downtown into two areas, North and South Downtown.

Downtown North: Bordered by San Rafael Avenue to the north, Myrtle Avenue/Cedar Street to the west, Ross Avenue to the south, and Sir Francis Drake Boulevard (SFD) to the east. There are 538 public parking spaces in this area, along with 20 private parking lots (218 spaces), for a total inventory of 756 public and private spaces. *Installation of parklets/streetlets in 2020/2021 in response to restaurants being closed to indoor dining reduced the parking inventory by 9 spaces, along with an increase of 3 new public spaces in front of 634-636 San Anselmo Avenue (replacing 3 private spaces) for a net loss of 6 public parking spaces.*

Downtown South: Bordered by Ross Avenue to the north, Cedar Street/Richmond Road to the west, Bolinas Avenue to the south, and Sir Francis Drake Boulevard (SFD) to the east. There are 255 public parking spaces in this area, along with 9 private parking lots (156 spaces), for a total inventory of 411 public and private spaces. *Installation of parklets/streetlets reduced the parking inventory by 3 public parking spaces.*

Figure 1: Downtown Parking Study Area

2.2 Public Parking Zones

The parking supply is a mixture of 20-minute parking, 2-hour, 4-hour, unregulated, accessible parking (ADA), merchant, and school loading (white) and general loading (yellow).

All of the parking along San Anselmo Avenue is restricted to 2 hours, as is the Pine Street Parking Lot. The Magnolia Avenue Parking Lot and the Creek Park Parking Lot are both restricted to 4 hours, and Creek Park has an un-signed merchant-only parking area – free parking for 4 hours, or unlimited time with a "Shop San Anselmo" sticker available from the Central Marin Police Authority (CMPA). Many of the side streets coming off of San Anselmo Avenue have 2-hour zones about halfway down the street, then switch to 4-hour zones. Cedar Street is unregulated.

It is interesting to note that the Magnolia Avenue parking lot was set to 2-hour parking in 1955, changed to 4-hour parking in 1975, back to 2-hour parking in 2004, and then back again to the current 4-hour parking in 2010. Parking meters were installed in 2004 with the rate set at $0.60 per hour, or a penny per minute. Similar duration changes took place at Creek Park, with 2-hour and 4-hour parking being changed multiple times over the last 45 years as the parking needs changed over time.

Figure 2: Downtown North Parking

= 2-Hour
= 4-Hour
= unregulated
= Merchant
= 20 minutes
= Loading
= Private Lot

Figure 3: Downtown South Parking

= 2-Hour
= 4-Hour
= unregulated
= Merchant
= 20 minutes
= Loading
= Private Lot

3. Existing Parking Behavior

The following section summarizes the existing vehicle parking occupancy and duration based on counts in September 2021.

3.1 Parking Counts:

Vehicle parking counts were undertaken in the study area between the hours of 8 am and 8 pm on two weekdays (Wednesday and Thursday) while school was in session in the first week of September 2021. (Earlier counts were taken by Town staff in fall 2019 and spring 2020, prior to the March 2020 shutdown, with similar results). Counts were done on two separate occasions at each location. The average of the two counts was used to determine the percent of spaces that held vehicles (occupancy rate). Based on these calculations, it was determined that the peak time for parking usage in downtown San Anselmo was between 1 pm and 2 pm, although similar occupancy rates were found between 11 am and 2 pm. The target maximum occupancy is typically considered to be 85% utilization, which provides for about one open space per block at any time (one open space out of 11 or 12 spaces). If occupancy rates are above 85%, then various strategies can be undertaken to bring the rate down below the target.

Weekend counts showed less vehicles parked than weekdays in all area, both Downtown North and South.

The occupancy rates for the types of parking (time limits), as well as the location, is shown in the tables below.

Table 1: Downtown North Peak Parking Occupancy by Time Restriction – 2021 counts

Time Restriction	# Spaces	Percent of Total Spaces	Occupancy at Peak Hour (1 pm-2 pm)
Unregulated	61	11%	67%
4-Hour	234	43%	73%
2-Hour	219	41%	80%
20-Minute	15	3%	63%
ADA	9	2%	44%
TOTAL	**538**	**100%**	**74% Average**

Source: NDS Services, 2021 – see Appendix

The 2-hour and 4-hour areas in the Downtown North area were observed having the highest parking occupancy, while the unregulated, 20-minute and ADA zones were lower. Overall, the Downtown North area has a peak parking occupancy below 75 percent, which means that there are about 130 available spaces during the peak hour (1 pm to 2 pm).

Table 2: Downtown North Peak Parking Occupancy by Location- 2021 counts

Location	# Spaces	Percent of Total Spaces	Avg. Occupancy (8 am-8 pm)	Occupancy at Peak Hour (1 pm -2 pm)
Magnolia Avenue Parking Lot	30	6%	65%	78%
Creek Park Lot	47	9%	87%	97%
Tamalpais Avenue	45	8%	80%	92%
Magnolia Avenue	16	3%	78%	75%
Tunstead Ave	42	8%	69%	71%
San Anselmo Avenue	95	18%	65%	88%
SFD Blvd.	51	9%	64%	67%
Cedar Avenue	49	9%	59%	62%
San Rafael Avenue	72	13%	37%	42%
Pine Street	26	5%	68%	77%
Pine Street Lot	28	5%	38%	70%
Woodland Avenue	15	3%	82%	87%
Ross Ave (north side)	22	4%	65%	75%
TOTAL	**538**	**100%**		**74% Average**

Source: NDS Services, 2021, See Appendix

The busiest parking areas in the Downtown North area include Creek Park parking lot, Tamalpais Avenue, Woodland Avenue and San Anselmo Avenue. Overall, the Downtown North area has a peak parking occupancy below 75 percent, which means that there are about 130 available spaces during the peak hour (1 pm to 2 pm).

Table 3: Downtown South Peak Parking Occupancy by Time Restriction – 2021 counts

Time Restriction	# Spaces	Percent of Total Spaces	Occupancy at Peak Hour
Unregulated	113	44%	39%
4-Hour	2	1%	100%
2-Hour	130	51%	60%
20-Minute	8	3%	56%
ADA	2	1%	51%
TOTAL	**255**	**100%**	**51% Average**

Source: NDS Services, 2021, see Appendix

Overall, the Downtown South area has a peak parking occupancy of 51 percent, the busiest parking zones being the 4-hour, 2-hour and 20-minute parking spaces.

Table 4: Downtown South Perak Parking Occupancy by Location – 2021 counts

Location	# Spaces	Percent of Total Spaces	Avg. Occ.	Occupancy at Peak Hour (1 pm - 2 pm)
Ross Ave (south side)	21	8%	58%	50%
Mariposa Ave	41	16%	46%	51%
Belle Ave	41	16%	53%	54%
San Anselmo Ave	86	34%	53%	54%
SFD	66	26%	34%	41%
TOTAL	**255**	**100%**		**51% Average**

Source: NDS Services, 2021, See Appendix

Within the Downtown South area, the streets with the highest parking demands throughout the day are San Anselmo Avenue and Belle Avenue. Sir Francis Drake Boulevard had an average occupancy below 50%.

When vehicular parking utilization rates are above 85%, it means that the most convenient spaces are in high demand, resulting in drivers circling to look for an available space. In Downtown San Anselmo, traffic circling is challenging due to the street layout, as there are not typical rectangular downtown blocks as found in larger cities and towns (for example, downtown San Rafael). Recommendations to reduce occupancy below 85% could include improvements in wayfinding, increase in shorter-duration spaces (2-hour spaces, for example), or charging for parking to incentivize some users to find less-convenient locations.

3.2 Parking Turnover

To analyze parking turnover, a duration study was done in 2019, which consisted of noting each vehicle in parking spaces every ten minutes for two to three hours during the peak lunch time between 10 am and 1 pm. Two duration studies were done on San Anselmo Avenue – once between San Rafael Avenue and Tunstead Avenue, and once between San Rafael Avenue and Ross Avenue. Both results were similar, with about half of vehicles parked for less than 30 minutes, 67-70% parked for less than one hour, and less than 10% parked longer than 2 hours.

Additional duration studies were done in July and September 2021 with similar results (see Table 5).

Increased enforcement may reduce or eliminate vehicles that stay over 2 hours.

Table 5: Downtown Parking Turnover

Date	Less than 30 min	Less than 1 hour	Less than 2 hours	Over 2 hours
5/2019	54%	70%	96%	4%
6/2019	49%	67%	90%	10%
8/2021	No data	75%	93%	7%
9/2021	No data	79%	93%	7%

Source: Town of San Anselmo 2019 data, NDS Services 2021 data, see Appendix

3.3 Findings

San Anselmo Avenue is at full capacity most of the day (10 A.M. to 8 P.M.), which is not surprising as it is the main artery through downtown and the easiest, thus the first, parking opportunities for visitors. The peak occupancy for Downtown North is during lunchtime (11 am to 2 pm, with the highest number of parked vehicles occurring from 1 pm to 2 pm). During this time (1 pm to 2 pm), the adjacent public lots and nearby streets are between 42 to 80 percent full, with 138 parking spaces available a short walk away from San Anselmo Avenue. Thus, Downtown North has sufficient number of available parking spaces, but directional signage could help users find spaces off San Anselmo Avenue.

About three-quarters of visitors to San Anselmo Avenue stay less than 1 hour, indicating a lot of turnover. Thus, the 2-hour designation seems appropriate. (Changing to 1-hour parking would drive 25% of vehicles into other areas (assuming drivers never overparked), and would require constant enforcement, thus it is not recommended to change the 2-hour limits).

4. Existing Parking Management

The following section summarizes the Town's existing parking policies and pricing.

4.1 Parking Pricing Policy, Supply and Collection Method

The Town has three locations where users pay to park: the Magnolia Avenue, Creek Park and Pine Street Parking Lots. Up until the Magnolia Lot was reconstructed in 2018, all three lots used mechanical parking meters, with the collections and maintenance performed by the City of San Rafael Parking Services for $1,500 per month.

The mechanical meters are generally not repairable when they break. San Rafael staff attempted to repair them, if possible, otherwise they were covered with a canvas bag. A pay station was installed in the Magnolia Lot in 2018, and in the Pine Street Lot in 2021. In 2020 during the COVID-19 shutdown, the mechanical meters were removed at Creek Park and Pine Street Parking Lots, and the collection and maintenance agreement with the City of San Rafael was not renewed. It was anticipated that when the economy returned to 'normal', the pay lots would all be served by pay stations. With the County flood control project affecting Creek Park in summer 2022, followed by construction of improvements to the park, it may be prudent to hold off on installing pay stations in Creek Park until final designs are approved. In the meantime, 4-hour parking is free in the Creek Park Parking Lot.

Considering capital costs, pay stations are typically more cost-effective when they serve over 15 parking spaces, thus, they are typically selected for compact parking lots. In locations with paid street parking,

individual parking meters are typically used. For street parking areas, for example along San Anselmo Avenue, although the parking meters are less expensive to purchase and install, they tend to lead to sidewalk clutter, and take more staff time to perform collection operations.

Currently, the public parking lots at Magnolia Avenue and Pine Street have parking rate of $0.60 per hour (a penny per minute), while the Creek Park lot is temporarily unmetered and free. Parking rates for other Marin cities are shown below:

Table 6: Marin County Parking Pricing

Location	Rate
San Rafael on-street parking	$1.50/hour
San Rafael surface parking lots	$0.75 per hour
San Rafael parking structures	$1.00 per hour
Sausalito surface parking lots ---Summer ---Winter	 $2.00 to $4.00/hour $1.00 to $3.00/hour
Mill Valley	$1.00 per hour, discount for residents who purchase yearly pass

Source: Town of San Anselmo

The general principle is that higher rates are charged for the most desired parking spaces (often the most convenient), and lower rates for less-desirable locations. For downtown San Anselmo, the most desirable locations (based on the occupancy rates and proximity to stores/restaurants/offices) are along San Anselmo Avenue, while nearby surface lots charge fees. This incentivizes motorists to circle and hunt for free on-street parking rather than pay for parking that may be farther away from their destination.

4.2 Merchant Parking:

In 1989, the Town Council created the merchant parking program to “make parking spaces accessible to customers of business in the downtown area” by allowing employees of the downtown businesses to park all day in four-hour parking zones adjacent to the downtown area. In 2019, the Town raised approximately $4,000 per year by selling “Shop San Anselmo” merchant parking stickers. In 2020 and 2021, sales of the merchant stickers dropped appreciably. The total number of merchant parking stickers sold was 152 in 2019, 79 in 2020, and 43 in 2021.

In addition to the 4-hour street parking zones, there are also 19 merchant parking spaces in Creek Park Parking Lot (established in 1975), with the existing parking meters covered through 2020, when the meters were removed. This area is not currently signed, so vehicles without the merchant stickers are allowed to park there for free up to 4 hours. In pre-COVID surveys, typically 16 to 18 spaces (of the 19) were utilized by merchants, with only a few spaces used by the public.

The merchant parking program has been very successful in encouraging employees to park farther away from their shop, restaurant or office, and freeing up closer parking for customers or other visitors. Counts during a weekday afternoon in 2019 counted 56 merchant vehicles in the north downtown zone,

approximately 27% of the vehicles parked in 4-hour or unregulated zones. (Counts were not made in 2021 due to the assumption that the data point would not be valid due to the low number of merchant stickers sold).

4.3 Electric Vehicle Parking:

Under current Town policy (established as a one-year pilot program in 2011), electric vehicles (EVs) may park without paying at the Magnolia Avenue, Creek Park and Pine Street Parking Lots. When the Magnolia Avenue Parking Lot was reconstructed in 2018, the Town established that EVs receive free electrical charging when paying for parking (making parking enforcement easier). The Sustainability Commission recommended that EVs pay for electric usage, and this policy was approved by the Town Council in spring 2020.

Strictly speaking, EV charging spaces are not considered 'parking', similar to spaces in front of the pumps at gasoline filling stations that are not considered parking. EVs charging at Level 2 EV charging stations, the current type installed at the Magnolia Avenue Parking Lot, typically charge for over two hours, which for all intents and purposes, uses the charging spaces as 'parking'.

The southern section of the Creek Park parking lot will be resurfaced in fall 2021 and conduit was added in August 2021 so that EV charging stations can be installed in the near future. Also in summer 2021, an additional ADA space was marked on the north aisle of the Pine Street Lot, which will allow easier installation of EV chargers in the future along that aisle, as at least one of the EV charging spaces needs to be ADA accessible.

Recent counts in the Magnolia Avenue Lot show that the EV spaces are only used less than 50% of the day (30% of the day on weekends), indicating that as of now, the Town has sufficient EV spaces.

4.4 ADA Parking

The American with Disabilities Act of 1990 (ADA) requires that in parking lots, 4% of spaces be marked for accessible parking, with the first space having a van-accessible aisle 8 feet wide. Currently, there is no requirement that street parking have accessible spaces. The Town has installed several ADA spaces along San Anselmo Avenue that partially meet ADA requirements. Occupancy counts showed that the on-street ADA spaces were rarely used. Additional ADA spaces are not recommended at this time.

4.5 Bicycle Master Plan:

The Town's Bicycle and Pedestrian Master Plan (BPMP) includes future improvements for bicycle connectivity across the Hub, which is adjacent to Downtown North and includes portions of Creek Park. One option to achieve better connectivity would be to install a contra-flow bike lane through Creek Park, from the intersection of Bridge and Center Avenues, through the parking lot to Bank Street. This route would require that the existing diagonal spaces be reconfigured to parallel spaces. The existing 33 diagonal spaces would become 22 parallel spaces, a loss of 11 spaces, however, eliminating the merchant parking would increase public parking by 19 spaces, for an overall increase of 8 public spaces. (The project is described in Section 5.2.1 of the BPMP, page 40). Staff recommends that any changes to

the Creek Park parking lot (other than to the Merchant Parking) be coordinated with future park projects (see Section 3.7 below).

4.6 Parklets:

In response to the COVID-19 pandemic in March 2020, the Town passed an urgency ordinance that allowed temporary use of public parking spaces to be used for outdoor dining or retail. The Town defines 'parklets' as areas in parking spaces that are for use by the general public, and 'streetlets' as areas that are reserved for patrons of restaurants or retailers. Over the last 17 months, several restaurants have installed streetlets – temporarily reducing the parking inventory by 9 spaces in Downtown North (offset by 3 new spaces in front of Creek Park on San Anselmo Avenue), and 3 spaces in Downtown South. With the average occupancy rate in Downtown North of about 75% at the peak hour, there appears to be sufficient parking capacity to allow additional parklets/streetlets along San Anselmo Avenue and other areas downtown.

4.7 Reimagine Creek Park:

The County Flood Control District has a future flood reduction project (San Anselmo Flood Risk Reduction project (SAFRR)) that will affect San Anselmo Avenue and Creek Park. After the business in 634-636 San Anselmo Avenue were relocated by the County, Town staff oversaw the demolition of the vacant buildings and created a temporary park that has been very popular with the changing indoor dining restrictions. This project resulted in three private parking spaces on the deck being eliminated, and the creation of three public parking spaces on San Anselmo Avenue.

The SAFFRR project is expected to be constructed in summer 2022, which will eliminate the temporary park, but will include a plaza area, eliminating 6 parking spaces currently fronting the park along San Anselmo Avenue. The associated Creekside Commons project may also affect parking in Creek Park. Any parking changes in conjunction with the park project will be considered by the Town Council as part of that project.

5. Parking Revenues and Expenses

Currently, all funds collected from the metered surface lots (Magnolia Avenue Lot and Pine Street Lot while the Creek Park Lot is temporarily free), is deposited into a dedicated parking fund.

The Town share of revenue from parking tickets (from all over San Anselmo) is deposited into the General Fund. Revenue from parking tickets partially offsets payments made to the Central Marin Police Authority for enforcement services. Parking ticket revenue is not included in projections below.

In 2020, The Town did not renew the contract with the City of San Rafael Parking Services for the maintenance and collection of the parking meters, which was paid from the General Fund. The new pay stations in the Magnolia Avenue and Pine Street lots result in less staff/contract time required for collections each week compared with the parking meters.

Prior to 2020:

Parking Meter Revenue (per year, 2019 data) – 3 lots	$5,000/mo x 11 =	$55,000/yr
Cost for San Rafael Parking Services	($1,500/mo x 11)	($16,500/yr)
Net generated		$38,500/yr

Fall 2021:

Parking Meter Revenue (fall 2021 data) – 2 lots	$2,100/mo x 11 =	$23,100/yr
Cost for Staff time (estimated)	($325/mo x 11)	($3,575/yr)
Net generated		$19,525/yr

In addition, the Town had been raising three to four thousand dollars per year for merchant parking stickers, allowing vehicles to park all day in 4-hour zones. In 2020, the revenue fell to about $2,000 and in 2021, to just over $1,000 per year. The drop is assumed to be from the pandemic, as parking pressures have eased in the downtown core. The income from the merchant parking program has been reserved, with a current fund balance of approximately $70,000. In summer 2021, approximately $30,000 was used from the fund for paving improvements and the new pay station at the Pine Street Lot.

The pay stations in the Magnolia and Pine Street Lots are currently maintained by Town staff. Between collections, maintenance and responding to user issues, staff spends approximately 2-4 hours per month. It is anticipated that collections and maintenance at all three downtown lots would require 4 to 6 hours of staff time per month (assuming two or three pay stations in the Creek Park Lot).

6. Parking Policy Options

The following section provides potential options for modifying the vehicular parking policy to achieve the goals of this study, which are to address the perceived scarcity and difficulty in finding available public parking in downtown San Anselmo.

One option to reduce the high occupancy rates along San Anselmo Avenue in Downtown North would be to charge for on-street parking by installing pay stations (8 stations between San Rafael Avenue and Tunstead Avenue, or 12 stations between San Rafael Avenue and Ross Avenue). The pay stations would encourage turnover, reduce 'overstaying', and reduce occupancy rates since a portion of the users would search for lower priced parking (in the Town lots), or search for free parking along sidestreets.

If pay stations were installed, it is assumed that a dedicated employee would need to be hired to maintain the stations and perform weekly or biweekly collections. Staff time could be reduced to several hours a month if the pay stations were configured to accept only credit cards and smart phone app (ParkMobile) payments, as no collections would need to be performed. Pay stations would cost about $15,000 each to purchase and install, assuming solar panels would collect enough sunlight. If

stations needed to be hard-wired to the electric grid, it is assumed that installation would add about $5,000 per machine ($20,000 total per machine).

Twelve pay stations would be required from San Rafael Avenue to Ross Avenue (92 spaces), and would cost about $275,000 to $300,000 to install (with signage and space numbering). For a smaller paid area along San Anselmo Avenue (San Rafael Avenue to Tunstead Avenue – 56 spaces), eight pay stations would be required at a cost of about $175,000 to $200,000.

If the pay stations were limited to credit card and smartphone application payment only, the staff time required would be significantly reduced, with no new staff positions required. If bills and coins were to be accepted, an additional staff person would be needed to perform collection duties.

The estimated yearly revenue is $256k ($156k for the shorter section). Yearly staff costs are estimated to be $45k ($34 for the shorter section). The payback period would be about 2 years for either option.

> Revenue assumptions: 92 spaces-average 60% utilized – 11 hours (7 am to 6 pm) – 6 days/wk – 47 wks/yr (56 spaces for shorter section) - $1.50/hr = $256,000 ($156,000 for shorter section)
>
> Staff time assumptions – 16 hrs/wk for 12 stations, 12 hrs/wk for 8 stations @ $60/hr (much less staff time if only credit cards and ParkMobile are used – no cash or coins).

As previously noted, all funding collected from the three metered surface lots (Magnolia Avenue Lot, Pine Street Lot and Creek Park Lot) is deposited into a restricted parking fund, and income from parking tickets is deposited into the General Fund. Revenue from parking tickets partially offsets payments made to the CMPA for enforcement services.

The new pay stations in the Magnolia Avenue and Pine Street lots result in less staff/contract time required for collections each week compared with the parking meters serviced by San Rafael. Between collections, maintenance and responding to user issues, staff spends staff spends approximately 2-4 hours per month. It is anticipated that collections and maintenance at all three downtown lots would require 4 to 6 hours of staff time per month (assuming two or three pay stations in the Creek Park Lot).

In addition, the Town raises approximately $1,000 to $2,000 per year for merchant parking stickers, allowing vehicles to park all day in 4-hour zones. The income from the merchant parking program has been reserved, with a current fund balance of approximately $70,000.

7. Recommendations and Options:

The northern section of Downtown San Anselmo has several areas where the vehicle parking occupancy during the peak lunch hour from 11 am to 2 pm is over 85%, which means at this time, it can be challenging to find parking in those areas. Just a block or two away from the busiest area lies San Rafael Avenue, which has a low occupancy throughout the day, including at the peak hour. Recommendations include increasing the number of 2-hour spaces close to San Anselmo Avenue and in surface lots, and adding paid parking to San Anselmo Avenue thereby increasing parking turnover.

San Anselmo Avenue in the southern section of Downtown has an average occupancy of 56% at the peak hour (and 31% average for the day), which indicates that the supply of parking is sufficient for the current use patterns. No specific recommendations in the southern section are proposed at this time.

7.1 General Parking Recommendations:

The following list of recommendations apply to both the north and south areas of Downtown San Anselmo.

1) Improve signage and wayfinding to highlight available parking, both in surface lots as well as San Rafael Avenue and southern Sir Francis Drake Boulevard (completed).
2) Increase turnover of on-street parking through increased enforcement.
3) Improve outreach to merchants and offices regarding the merchant permit program.
4) Provide physical maps for merchants to provide to their customers showing available parking and duration limits.

7.2 Location-Specific Recommendations:

Table presents location-specific recommended changes to San Anselmo's Downtown parking policies.

Table 7: Location-Specific Parking Policy Recommendations

Designation	Recommendation
G-1	Increase available 2-hour spaces by converting Magnolia Avenue between Library Place and Cedar Street from 4-hour parking to 2-hour parking.
G-2	Increase available 2-hour spaces by converting southbound Sir Francis Drake between the Hub and Tunstead Avenue from 4-hour parking to 2-hour parking.
G-3	To reduce traffic congestion, eliminate parking spaces on northbound SFD between Bank Street and the Hub to create a 24-hour slip lane. (Currently, parking is restricted between 3:30 pm and 6 pm only, 2-hour limit). *Net loss of four 2-hour spaces and one 30-min space. Traffic counts indicate that this area has an occupancy of less than 1%.*
G-4	To improve circulation and usage of the Magnolia Avenue Parking Lot, change Kientz Lane to two-way.
G-5	If paid parking is instituted on San Anselmo Avenue, consider changing price per hour at the other Town parking lots.
Creek Park Lot	
CP-1	Eliminate merchant parking, increasing the available public spaces by 19.
CP-2	Convert to 2-hour time limits.

San Anselmo Avenue	
SA-1	Install paid parking on San Anselmo Avenue between San Rafael Avenue and Ross Avenue, with a rate of $1.50/hour from 7 am to 6 pm. (12 pay stations)
SA-2	Install paid parking on San Anselmo Avenue between San Rafael Avenue and Tunstead Avenue, with a rate of $1.50/hour from 7 am to 6 pm. (8 pay stations)

8. Next Steps

Based on changes to the downtown parking areas that are approved by the Town Council, it is expected that parking behavior will be modified. It is recommended that parking counts be done every year or two to identify if the changes are working, or if other changes or modifications to improve parking are necessary.

If paid parking on San Anselmo Avenue is to be instituted, a detailed plan, cost estimate and revenue projection should be developed, funding identified, and the project added to the Capital Improvement Program.

Appendix: Parking Count Data

Town of San Anselmo - September 2021
Downtown Parking Study - NDS Counts - Weekdays

Weekdays - Tuesday/Wednesday/Thursday

Location	No. Spaces	Time Limit	8 am to 9 am		9 am to 10 am		10 am to 11 am		11 am to 12 pm		12 pm to 1 pm		1 pm to 2 pm		2 pm to 3 pm		3 pm to 4 pm		4 pm to 5 pm		5 pm to 6 pm		6 pm to 7 pm		7 pm to 8 pm		
Magnolia Lot - E\	6	4 hr	1	1	2	2	2	3	2	2	4	3	4	3	2	3	3	2	2	2	2	3	4	4	4	3	Avg Occ
lot	22	4 hr	3	4	8	7	14	11	14	13	17	21	18	21	20	16	11	17	11	15	19	19	18	20	19	19	10am-8pm
ADA	2	n/a	1	0	0	0	0	0	0	0	0	1	0	1	0	1	0	0	0	0	0	1	0	1	1	1	
Total	**30**		**5**	**5**	**10**	**9**	**16**	**14**	**16**	**15**	**21**	**25**	**22**	**25**	**22**	**20**	**14**	**19**	**13**	**17**	**21**	**23**	**22**	**25**	**24**	**23**	**426**
Average and % Occupancy	30		5	17%	9.5	32%	15	50%	15.5	52%	23	77%	23.5	78%	21	70%	16.5	55%	15	50%	21	70%	22	73%	23.5	78%	65%
Pine Street Lot - metered	26	2 hr	1	2	2	2	9	6	14	13	22	17	14	22	14	13	16	8	8	9	1	4	4	1	0	0	
ADA	2	n/a	0	0	0	0	1	0	2	1	2	1	2	1	1	2	2	1	0	0	0	0	0	1	0	1	
Total	**28**		**1**	**2**	**2**	**2**	**10**	**6**	**16**	**14**	**24**	**18**	**16**	**23**	**15**	**15**	**18**	**9**	**8**	**9**	**1**	**4**	**4**	**2**	**0**	**1**	**220**
Average and % Occupancy	28		1.5	5%	2	7%	8	29%	15	54%	21	75%	19.5	70%	15	54%	13.5	48%	8.5	30%	1	4%	3	11%	0.5	2%	38%
Creek Park - free																											
whole lot	45	4 hr	19	12	27	21	39	39	41	45	45	42	45	44	45	38	39	36	37	38	40	40	41	39	41	36	
ADA	2	n/a	0	0	1	1	0	0	0	0	0	0	1	1	0	0	0	0	0	0	0	0	1	1	0	0	
Total	47		19	12	28	22	39	39	41	45	45	42	46	45	45	38	39	36	37	38	40	40	42	40	41	36	895
Average and % Occupancy	47		15.5	33%	25	53%	39	83%	43	91%	43.5	93%	45.5	97%	41.5	88%	37.5	80%	37.5	80%	40	85%	41	87%	38.5	82%	87%
S.A. Avenue - Bridge to Tunstead																											
east side - acorn bldg	3	2 hr	3	1	2	3	3	3	2	2	3	2	2	3	2	3	2	3	2	3	2	3	2	3	3	3	
east side - Thai restaurant - 4+1 ADA	5	2 hr	4	0	3	4	4	5	5	4	5	4	5	4	4	4	4	4	5	4	3	5	5	2	5	5	
west side Fire station	5	2 hr	4	2	4	4	5	5	5	5	5	5	5	5	5	3	4	4	5	5	4	5	5	4	5	4	
Tamalpais at S.A. - intersection	1	20 mi	0	0	0	0	0	0	0	1	1	0	0	0	0	1	1	0	0	0	0	1	0	0	0	1	
west side - Tamalpais to crosswalk - 5 diag. + 7 parall	12	2 hr	6	6	7	9	12	12	12	12	10	12	12	12	11	12	11	10	12	10	12	11	11	9	12	11	
		2 hr																									
west side - Magnolia to Tunstead - Town Hall	9	2 hr	5	4	8	6	8	5	8	7	9	8	9	9	9	6	9	9	8	8	6	9	9	8	8	9	
east side - Tamalpais to Magnolia	11	2 hr	6	8	6	8	9	10	10	10	10	10	10	10	10	9	9	9	9	10	10	11	10	9	10	9	
east side - Magnolia to Tunstead - diag.	11	2 hr	8	1	8	8	9	10	10	10	11	10	11	11	10	8	11	8	9	10	9	10	11	10	10	10	
Total	57		36	22	38	42	50	50	52	51	54	51	54	54	51	46	51	47	50	50	46	55	53	45	53	52	1153
Average and % Occupancy	57		29	51%	40	70%	50	88%	51.5	90%	52.5	92%	54	95%	48.5	85%	49	86%	50	88%	50.5	89%	49	86%	53	93%	89%
S.A. Ave - Tunstead to Bolinas - west side - Tunstead to Pine	7	2 hr	2	2	3	4	7	5	6	6	6	4	6	7	7	6	7	7	4	5	3	5	5	3	3	5	
west side - Pine to Woodland 2 spaces parklet	5	2 hr	2	0	4	0	4	3	5	3	4	3	4	3	4	2	5	3	4	4	1	4	4	1	3	2	
west side - Woodland to Ross	5	2 hr	2	2	2	2	3	5	1	5	4	3	3	4	5	5	4	4	2	3	2	1	2	1	0	1	
west side - Woodland to Ross (ADA)	1	n/a	0	0	0	0	0	0	0	0	0	0	0	0	0	0	0	0	1	0	0	0	0	0	0	0	
west side - ADA at Mariposa	1	2 hr	0	0	0	0	0	0	0	0	0	0	0	0	1	0	1	0	0	0	0	0	0	0	0	0	
west side - Ross to Mariposa	13	2 hr	2	4	2	5	5	4	3	5	3	10	6	8	9	8	7	5	6	4	3	4	4	4	3	5	
west side - Mariposa to Belle	6	20 mi	2	3	4	6	3	4	4	2	4	2	5	3	6	2	0	3	3	3	0	1	1	2	0	3	
west side - Mariposa to Belle	3	2 hr	2	2	2	0	2	2	2	2	2	2	2	2	2	2	1	1	0	0	1	0	2	0	1	0	
west side - Belle to Bolinas	4	2 hr	0	4	0	4	1	2	0	1	2	3	3	3	4	3	1	2	1	3	2	2	2	1	2	1	
east side - Little Tunstead to Little Pine	6	2 hr	2	0	3	4	6	5	6	5	6	6	6	6	5	6	6	6	4	6	3	3	5	4	1	3	
east side - Little Pine to Ross - 3x20 min + 10 reg	13	2 hr	0	5	9	5	11	6	9	10	13	11	11	11	13	12	8	9	5	8	4	4	6	6	4	4	
east side - ADA at Ross	1	2 hr	0	0	0	0	0	0	0	0	0	0	0	0	0	0	0	0	0	0	0	0	0	0	0	0	
east side diagonal - Ross to Bolinas	59	2 hr	9	9	19	13	26	19	28	27	29	37	24	41	21	23	6	9	4	6	1	3	0	1	1	1	
Total - Tunstead to Ross	**38**		**8**	**9**	**21**	**15**	**31**	**24**	**27**	**29**	**33**	**27**	**30**	**31**	**34**	**31**	**30**	**29**	**20**	**26**	**13**	**17**	**22**	**15**	**11**	**15**	**548**
Average and % Occupancy - Tunstead to Ross	38		8.5	22%	18	47%	27.5	72%	28	74%	30	79%	30.5	80%	32.5	86%	29.5	78%	23	61%	15	39%	18.5	49%	13	34%	65%
Total - Ross to Bolinas	**86**		**15**	**22**	**27**	**28**	**37**	**31**	**37**	**37**	**40**	**54**	**40**	**57**	**43**	**38**	**16**	**20**	**14**	**16**	**7**	**10**	**9**	**8**	**7**	**10**	**623**
Average and % Occupancy - Ross to Bolinas	86		18.5	22%	27.5	32%	34.0	40%	37.0	43%	47.0	55%	48.5	56%	40.5	47%	18.0	21%	15.0	17%	8.5	10%	8.5	10%	8.5	10%	31%
TOTAL																											

Location	No. Spaces	Time Limit	8 am to 9 am		9 am to 10 am		10 am to 11 am		11 am to 12 pm		12 pm to 1 pm		1 pm to 2 pm		2 pm to 3 pm		3 pm to 4 pm		4 pm to 5 pm		5 pm to 6 pm		6 pm to 7 pm		7 pm to 8 pm		
Tamalpais Avenue																											
north side - S.A. to Cedar	11	2 hr	6	7	6	10	9	11	10	11	9	11	10	11	8	11	10	11	10	9	7	10	8	11	8	10	Avg Occ
north side - S.A. to Cedar	13	4 hr	9	6	9	7	11	9	13	10	13	10	13	11	13	9	13	7	9	6	4	9	3	10	4	8	10am-8pm
south side - S.A. to Cedar	7	2 hr	3	4	3	4	5	7	7	7	6	6	7	6	6	6	6	5	6	4	4	2	6	6	6	6	
south side - S.A. to Cedar	14	4 hr	10	6	10	10	12	9	14	10	13	12	14	11	12	10	13	10	12	9	12	10	14	8	13	7	
Total	**45**		**28**	**23**	**28**	**31**	**37**	**36**	**44**	**38**	**41**	**39**	**44**	**39**	**39**	**36**	**42**	**33**	**37**	**28**	**27**	**31**	**31**	**35**	**31**	**31**	**829**
Average and % Occupancy	45		25.5	57%	29.5	66%	36.5	81%	41	91%	40	89%	41.5	92%	37.5	83%	37.5	83%	32.5	72%	29	64%	33	73%	31	69%	80%
Magnolia Avenue (one way)																											
north side - S.A. to Cedar	16	4 hr	9	9	9	7	14	11	14	14	13	12	14	10	13	11	13	11	13	13	12	15	13	11	11	13	**285**
Average and % Occupancy	16		9	56%	8	50%	12.5	78%	14	88%	12.5	78%	12	75%	12	75%	12	75%	13	81%	13.5	84%	12	75%	12	75%	78%
Tunstead Avenue																											
north side - S.A. to Cedar	5	20 mi	2	2	2	1	3	2	4	4	3	5	4	4	4	3	4	2	3	3	1	3	1	4	2	4	
north side - S.A. to Cedar	8	2 hr	3	4	5	5	8	5	8	8	5	8	7	8	8	4	7	4	7	6	7	5	7	3	8	3	
north side - S.A. to Cedar	1	20 mi	0	1	0	1	0	0	1	0	0	0	0	0	0	0	1	1	0	1	1	0	0	0	0	0	
north side - S.A. to Cedar	5	4 hr	1	4	5	3	4	2	3	3	3	4	3	3	5	4	4	4	4	3	5	3	3	2	3	5	
south side - S.A. to Cedar	15	2 hr	9	4	9	9	11	11	10	15	9	15	11	9	11	10	11	14	10	6	11	10	10	10	11	9	
south side - S.A. to Cedar	8	4 hr	1	6	7	4	6	4	7	7	7	8	4	7	7	4	6	4	4	3	7	2	3	3	5	5	
Tunstead Totals	**42**		**16**	**21**	**28**	**23**	**32**	**24**	**33**	**37**	**27**	**40**	**29**	**31**	**35**	**25**	**33**	**29**	**28**	**22**	**32**	**23**	**24**	**22**	**29**	**26**	**669**
Average and % Occupancy	42		18.5	44%	25.5	61%	28	67%	35	83%	33.5	80%	30	71%	30	71%	31	74%	25	60%	27.5	65%	23	55%	27.5	65%	69%
San Rafael Avenue																											
north side - S.A. to Myrtle	21	4 hr	10	10	8	14	12	13	12	9	13	11	12	13	8	9	8	9	8	12	16	10	10	9	11	6	
Grove																											
	13	4 hr	3	2	6	3	1	3	1	2	4	2	2	1	4	3	5	3	5	2	4	2	3	3	3	3	
south side - S.A. to Myrtle	38	4 hr	9	7	7	10	12	8	11	9	20	14	13	19	20	22	17	16	16	14	7	10	7	10	8	11	
San Rafael Total	**72**		**22**	**19**	**21**	**27**	**25**	**24**	**24**	**20**	**37**	**27**	**27**	**33**	**32**	**34**	**30**	**28**	**29**	**28**	**27**	**22**	**20**	**22**	**22**	**20**	**620**
Average and % Occupancy	72		20.5	28%	24	33%	24.5	34%	22	31%	32	44%	30	42%	33	46%	29	40%	28.5	40%	24.5	34%	21	29%	21	29%	37%
Cedar Avenue																											
Tamalpais to Magnolia																											
west side	5	none	3	3	4	4	3	5	4	4	4	4	4	4	4	4	4	3	4	3	3	2	2	2	3	2	
east side	6	none	3	4	2	5	2	6	2	5	4	6	5	5	3	5	4	3	3	4	2	2	2	4	4	4	
Magnolia to Tunstead																											
west side	9	none	7	6	8	3	4	3	8	4	7	5	6	3	7	5	5	4	4	4	5	2	5	4	4	4	
east side	12	none	6	7	7	6	7	6	8	5	6	7	8	5	8	6	7	6	8	6	4	4	5	3	3	3	
Tunstead to Pine																											
west side	0	none																									
east side	6	none	4	4	4	3	3	3	6	3	4	3	3	4	5	3	5	4	5	4	3	3	4	4	4	5	
Pine to Woodland																											
west side	6	none	4	5	4	5	5	4	4	3	4	3	4	5	3	4	3	4	5	2	4	2	5	3	5	4	
east side	0	none																									
Woodland to Ross																											
west side	5	none	5	4	5	3	2	4	3	3	3	3	2	3	3	5	3	5	4	5	4	5	5	5	5	5	
Cedar Total	**49**		**32**	**33**	**34**	**29**	**26**	**31**	**35**	**27**	**32**	**31**	**32**	**29**	**33**	**32**	**31**	**29**	**33**	**28**	**25**	**20**	**28**	**25**	**28**	**27**	**710**
Average and % Occupancy	49		32.5	66%	31.5	64%	28.5	58%	31	63%	31.5	64%	30.5	62%	32.5	66%	30	61%	30.5	62%	22.5	46%	26.5	54%	27.5	56%	59%

Location		No. Spaces	Time Limit	8 am to 9 am		9 am to 10 am		10 am to 11 am		11 am to 12 pm		12 pm to 1 pm		1 pm to 2 pm		2 pm to 3 pm		3 pm to 4 pm		4 pm to 5 pm		5 pm to 6 pm		6 pm to 7 pm		7 pm to 8 pm		
Pine Street	north side - S.A. to Cedar	3	20 mi	2	0	0	0	3	0	1	3	3	2	3	1	3	1	3	0	0	3	0	1	1	0	0	0	Avg Occ
	north side - S.A. to Cedar	6	2 hr	4	3	5	4	5	5	4	6	6	5	4	6	4	6	4	4	4	4	1	2	1	3	2	3	10am-8pm
	south side - S.A. to Cedar	17	2 hr	10	14	10	10	11	10	14	9	14	13	13	13	14	12	11	13	14	11	14	10	15	12	15	11	
	Total	**26**		**16**	**17**	**15**	**14**	**19**	**15**	**19**	**18**	**23**	**20**	**20**	**20**	**21**	**19**	**18**	**17**	**18**	**18**	**15**	**13**	**17**	**15**	**17**	**14**	**418**
	Average and % Occupancy	26		16.5	63%	14.5	56%	17	65%	18.5	71%	21.5	83%	20	77%	20	77%	17.5	67%	18	69%	14	54%	16	62%	15.5	60%	68%
Woodland Ave	north side - S.A. to Cedar	2	4 hr	1	2	1	1	1	2	1	2	1	1	2	2	2	2	1	1	2	2	2	2	1	2	1	2	
	north side - S.A. to Cedar	5	none	2	3	4	4	2	5	3	5	4	4	4	4	5	3	5	4	5	4	0	3	4	3	4	5	
	south side - S.A. to Cedar	8	4 hr	6	5	7	6	7	7	8	8	8	8	7	7	8	6	8	6	5	6	7	6	6	6	6	8	
	Total	**15**		**9**	**10**	**12**	**11**	**10**	**14**	**12**	**15**	**13**	**13**	**13**	**13**	**15**	**11**	**14**	**11**	**12**	**12**	**9**	**11**	**11**	**11**	**11**	**15**	**288**
	Average and % Occupancy	15		9.5	63%	11.5	77%	12	80%	13.5	90%	13	87%	13	87%	13	87%	12.5	83%	12	80%	10	67%	11	73%	13	87%	82%
Ross Avenue	north side - S.A. to Cedar	22	2 hr	13	17	15	20	13	18	14	18	13	20	15	18	14	15	20	16	7	14	7	15	7	13	9	12	65%
	north side - S.A. to Cedar	0	none																									
	south side - S.A. to Cedar	8	2 hr	5	5	4	1	5	4	3	2	4	2	5	4	2	1	6	2	5	7	2	2	1	1	2	2	58%
	south side - S.A. to Cedar	13	none	1	10	4	11	2	10	2	12	4	11	1	11	2	12	6	12	2	6	1	6	2	6	8	5	
	Total	**43**		**19**	**32**	**23**	**32**	**20**	**32**	**19**	**32**	**21**	**33**	**21**	**33**	**18**	**28**	**32**	**30**	**14**	**27**	**10**	**23**	**10**	**20**	**19**	**19**	**567**
	Average and % Occupancy	43		25.5	59%	27.5	64%	26	60%	25.5	59%	27	63%	27	63%	23	53%	31	72%	20.5	48%	16.5	38%	15	35%	19	44%	54%
Mariposa Avenue	north side - S.A. to Richmond	18	2 hr	12	11	8	12	9	13	10	12	13	12	13	15	17	12	13	12	11	8	12	12	10	12	10	12	
	north - ADA	1	n/a	0	0	0	0	0	0	0	0	0	0	0	0	1	0	0	0	0	0	0	0	0	0	0	0	
	north side	0	none																									
	south side - S.A. to Richmond	11	2 hr	6	5	8	6	3	3	5	3	5	2	7	6	11	5	4	6	4	1	5	7	3	7	3	6	
	white zone	11	n/a	0	1	0	0	0	0	2	1	2	5	0	1	1	1	0	3	7	8	7	4	2	0	1	0	
	white zone		n/a																									
	Total	**41**		**18**	**17**	**16**	**18**	**12**	**16**	**17**	**16**	**20**	**19**	**20**	**22**	**30**	**18**	**17**	**21**	**22**	**17**	**24**	**23**	**15**	**19**	**14**	**18**	**449**
	Average and % Occupancy	41		17.5	43%	17	41%	14	34%	16.5	40%	19.5	48%	21	51%	24	59%	19	46%	19.5	48%	23.5	57%	17	41%	16	39%	46%
Belle Avenue	north side - S.A. to Richmond	10	2 hr	8	5	10	9	9	7	10	10	9	10	8	7	8	6	4	6	5	5	4	6	8	6	8	6	
	white zone	13	n/a	2	0	0	3	2	2	2	3	4	2	2	2	6	2	0	4	2	1	2	2	1	2	1	2	
	south side - S.A. to Richmond	1	20 mi	0	0	1	1	1	0	0	1	1	1	0	0	1	0	0	0	0	0	0	0	0	0	0	0	
	south side - S.A. to Richmond	4	2 hr	2	1	4	4	1	1	4	3	4	3	1	1	4	4	1	1	1	1	0	0	1	0	2	1	
	south side - S.A. to Richmond	13	none	10	10	12	8	11	12	13	12	10	9	11	12	12	12	8	12	7	10	7	10	9	10	9	11	
	Total	**41**		**22**	**16**	**27**	**25**	**24**	**22**	**29**	**29**	**28**	**25**	**22**	**22**	**31**	**24**	**13**	**23**	**15**	**17**	**13**	**18**	**19**	**18**	**20**	**20**	**522**
	Average and % Occupancy	41		19	46%	26	63%	23	56%	29	71%	26.5	65%	22	54%	27.5	67%	18	44%	16	39%	15.5	38%	18.5	45%	20	49%	53%
SFD -	west side - Hub to Bank	10	4 hr	3	3	6	3	8	4	7	5	10	8	9	10	10	6	9	7	9	9	8	10	7	7	8	9	
	west side - Bank to Tunstead	1	20 mi	0	0	1	0	0	1	1	0	1	0	0	0	1	1	1	1	1	1	1	1	1	0	1	0	
	west side - Bank to Tunstead	3	2 hr	0	0	2	1	0	0	1	2	1	2	1	1	3	2	2	1	2	3	2	3	2	1	2	2	
	west side - Tunstead to Pine	2	20 mi	0	0	2	2	2	1	2	1	2	2	1	2	2	2	1	2	1	2	1	2	1	0	1	0	
	west side - Tunstead to Pine	2	2 hr	0	0	2	2	2	2	2	2	2	2	2	2	2	2	2	2	2	2	2	2	2	1	1	2	
	west side - Pine to Ross	7	none	1	0	2	1	2	5	7	6	7	7	7	6	7	7	7	4	7	5	7	7	5	6	4	4	
	west side - Ross to Bolinas	35	none	13	10	13	14	13	16	14	13	15	11	14	12	12	13	17	13	16	11	13	10	13	11	13	12	
	east side - Hub to Bank	5	2 hr	0	0	0	0	0	0	0	0	0	0	0	0	0	0	0	0	0	0	0	0	0	1	0	0	
	east side - Bank to Tunstead - 5 + 3 loading 6-noon	8	2 hr	3	0	0	2	2	3	1	5	3	5	3	5	4	8	3	8	3	8	8	8	8	7	7	7	
	east side - Tunstead to Barber	13	4 hr	6	4	6	6	6	9	5	7	7	7	9	10	10	11	5	8	4	7	8	8	10	7	8	9	
	east side - Barber to Bolinas	1	20 mi	1	1	1	1	1	1	1	1	1	1	0	1	1	1	1	1	1	1	1	1	0	0	0	0	
	east side - Barber to Bolinas	2	4 hr	2	2	2	2	2	2	2	2	2	2	2	2	2	2	1	2	2	2	1	2	1	1	1	1	
	east side - Barber to Bolinas	28	none	7	2	4	3	7	4	9	7	7	8	14	9	11	7	6	5	5	8	5	6	3	5	4	7	
	Total Hub to Ross Ave	**51**		**13**	**7**	**21**	**17**	**22**	**25**	**26**	**28**	**33**	**33**	**32**	**36**	**39**	**39**	**30**	**33**	**29**	**37**	**37**	**41**	**36**	**30**	**32**	**33**	**709**
	Average and % Occupancy	51		10	20%	19	37%	23.5	46%	27	53%	33	65%	34	67%	39	76%	31.5	62%	33	65%	39	76%	33	65%	32.5	64%	64%
	Total Ross Ave to Bolinas Ave	**66**		**23**	**15**	**20**	**20**	**23**	**23**	**26**	**23**	**25**	**22**	**30**	**24**	**26**	**23**	**25**	**21**	**24**	**22**	**20**	**19**	**17**	**17**	**18**	**20**	**526**
	Average and % Occupancy	66		19	29%	20	30%	23	35%	24.5	37%	23.5	36%	27	41%	24.5	37%	23	35%	23	35%	19.5	30%	17	26%	19	29%	34%
	Total	**793**		**311**	**291**	**380**	**372**	**447**	**437**	**487**	**488**	**530**	**531**	**512**	**547**	**542**	**488**	**466**	**446**	**416**	**425**	**379**	**408**	**393**	**380**	**388**	**393**	**10,457**
	North Downtown	538		227	206	282	269	344	331	373	369	409	398	394	407	408	372	383	347	334	340	312	330	330	311	319	318	
	South Downtown	255		84	85	98	103	103	106	114	119	121	133	118	140	134	116	83	99	82	85	67	78	63	69	69	75	
		793		**311**	**291**	**380**	**372**	**447**	**437**	**487**	**488**	**530**	**531**	**512**	**547**	**542**	**488**	**466**	**446**	**416**	**425**	**379**	**408**	**393**	**380**	**388**	**393**	

138 spaces avail DT North
126 spaces avail DT South
264 spaces avail overall

Town of San Anselmo - September 2021

Downtown Parking Study - NDS Counts - Weekdays

At Peak Hour (1 pm to 2 pm)

		Mag. Lot		SR Ave		Tam. Ave		Mag. Ave		Tunst.		SA Ave		Creek Pk		SFD		Cedar Ave		Pine St		Pine Lot		Woodland Ave		Ross Ave		Total Spaces	Occup	
44%	**North**	Inv	Count																									Total		
	unreg															7	6.5	49	30.5					5	4			61	41	67.2%
	4 hr	28	23	72	30	27	24.5	16	12	13	8.5			45	44.5	23	19							10	9			234	170.5	72.9%
	2 hr					18	17			23	17.5	89	81.5			18	7			23	18	26	18			22	16.5	219	175.5	80.1%
	20 min									6	4	3	2			3	1.5			3	2							15	9.5	63.3%
	ADA	2	0.5									3	1	2	1							2	1.5					9	4	44.4%
	Total	30	23.5	72	30	45	41.5	16	12	42	30	95	84.5	47	45.5	51	34	49	30.5	26	20	28	19.5	15	13	22	16.5	538	400.5	74.4%
	Occup	23.5	78%	30	42%	41.5	92%	12	75%	30	71%	84	88%	45.5	97%	34	67%	30.5	62%	20	77%	19.5	70%	13	87%	16.5	75%	400		
	South	Ross		Mariposa		Belle		SA		SFD		Tot. Spaces		Occup														**138**	**spaces avail**	
	unreg	13	6	11	0.5	26	13.5			63	24.5	113		44.5	39%															
	4 hr									2	2	2		2	100%															
	2 hr	8	4.5	29	20.5	14	8.5	79	44.5			130		78	60%															
	20 min					1	0	6	4	1	0.5	8		4.5	56%															
	ADA			1	0			1	0			2		0	0%															
	Total	21	10.5	41	21	41	22	86	48.5	66	27	255		129	51%															
	Occup	10.5	50%	21	51%	22	54%	48.5	56%	27	41%			129	51%	**126**	**spaces avail**													

Town of San Anselmo - September 2021
Downtown Parking Study - NDS Counts - weekend

Weekend - Saturday/Sunday

Location	No. Spaces	Time Limit	8 am to 9 am		9 am to 10 am		10 am to 11 am		11 am to 12 pm		12 pm to 1 pm		1 pm to 2 pm		2 pm to 3 pm		3 pm to 4 pm		4 pm to 5 pm		5 pm to 6 pm		6 pm to 7 pm		7 pm to 8 pm		
Magnolia Lot E\	6	4 hr	1	1	2	2	2	1	2	1	2	1	1	2	0	2	2	2	2	2	2	3	3	2	2	3	Avg Occ
lot	22	4 hr	2	5	2	9	5	13	14	12	18	12	16	14	15	11	15	10	14	12	14	13	17	17	22	22	10am-8pm
ADA	2	n/a	0	0	0	0	0	0	0	1	0	0	0	0	0	0	0	0	0	0	0	0	1	1	1	0	
Total	30		3	6	4	11	7	14	16	14	20	13	17	16	15	13	17	12	16	14	16	16	21	20	25	25	
Average and % Occupancy	30		4.5	15%	7.5	25%	10.5	35%	15	50%	16.5	55%	16.5	55%	14	47%	14.5	48%	15	50%	16	53%	21	70%	25	83%	55%
Pine Street Lot - whole lo\	26	2 hr	1	3	2	6	4	10	14	12	20	15	12	12	6	11	5	6	7	6	5	6	16	5	24	9	
ADA	2	n/a	0	0	1	1	0	1	0	0	2	1	0	1	2	2	0	1	0	0	0	0	1	1	2	1	
Total	28		1	3	3	7	4	11	14	12	22	16	12	13	8	13	5	7	7	6	5	6	17	6	26	10	
Average and % Occupancy	28		2	7%	3	11%	7.5	27%	13	46%	19	68%	12.5	45%	10.5	38%	6	21%	6.5	23%	5	18%	11.5	41%	18	64%	39%
Creek Park - free	45	4 hr	13	16	30	18	41	27	43	30	44	21	40	20	44	16	36	19	36	22	44	26	45	26	45	29	
all	2	n/a	0	0	0	0	0	0	0	1	0	0	0	1	0	0	0	0	0	0	1	0	1	0	2	0	
ADA																											
Total	47		13	16	30	18	41	27	43	31	44	21	40	21	44	16	36	19	36	22	45	26	46	26	47	29	
Average and % Occupancy	47		14.5	31%	24	51%	34	72%	37	79%	32.5	69%	30.5	65%	30	64%	27.5	59%	29	62%	35.5	76%	36	77%	38	81%	70%
S.A. Avenue - Bridge to Tunstead																											
east side - acorn bldg	3	2 hr	0	0	0	0	3	2	2	1	2	3	2	3	2	1	3	0	2	2	2	0	3	0	3	2	
east side - Thai restaurant - 4+1 ADA	5	2 hr	4	2	4	1	5	4	4	5	4	5	4	3	5	4	4	3	3	1	5	5	5	5	5	3	
west side Fire station	5	2 hr	2	1	3	4	4	4	5	5	5	3	4	3	5	3	5	5	4	4	5	4	5	3	5	5	
Tamalpais at S.A. - intersection	1	20 mi	1	0	0	0	0	0	0	0	0	1	1	1	1	1	0	0	0	1	1	0	0	0	0	0	
west side - Tamalpais to crosswalk - 5 diag. + 7 parall	12	2 hr	3	4	11	10	6	11	11	12	12	11	10	11	12	12	9	11	6	12	0	7	2	11	0	12	
west side - Magnolia to Tunstead - Town Hall	9	2 hr	1	5	3	4	8	5	8	8	9	3	9	5	9	5	8	1	4	9	1	7	0	9	0	9	
east side - Tamalpais to Magnolia	11	2 hr	5	2	9	7	8	10	11	10	10	9	9	11	8	9	6	10	8	10	0	7	3	10	0	10	
east side - Magnolia to Tunstead - diag.	11	2 hr	4	4	6	3	7	8	10	9	10	11	10	11	10	7	8	7	8	7	4	9	2	11	4	11	
Total	57		20	18	36	29	41	44	51	50	52	46	49	48	52	42	43	37	35	46	18	39	20	49	17	52	
Average and % Occupancy	57		19	33%	32.5	57%	42.5	75%	50.5	89%	49	86%	48.5	85%	47	82%	40	70%	40.5	71%	28.5	50%	34.5	61%	17	30%	70%
S.A. Ave - Tunstead to Bolinas - west side - Tunstead to Pine	7	2 hr	1	2	1	3	5	5	6	3	7	6	5	5	3	5	3	6	4	6	6	6	7	7	7	7	
west side - Pine to Woodland	5	2 hr	4	2	4	5	4	4	5	3	5	2	4	5	4	5	4	3	4	2	4	4	4	4	4	4	
west side - Woodland to Ross	5	2 hr	0	0	2	2	4	3	4	2	4	2	4	3	4	2	2	1	3	2	3	3	4	1	5	2	
west side - Woodland to Ross (ADA)	1	n/a	0	0	0	0	1	1	0	0	1	0	0	0	1	0	0	1	0	0	1	0	0	0	0	0	
west side - ADA at Mariposa	1	2 hr	0	0	1	0	1	0	0	0	0	0	0	0	0	0	1	0	0	0	0	0	0	0	0	0	
west side - Ross to Mariposa	13	2 hr	1	1	0	1	3	4	2	4	6	4	1	5	2	2	2	1	1	2	2	1	2	2	6	3	
west side - Mariposa to Belle	6	20 mi	1	1	3	1	2	4	1	2	4	2	2	3	3	1	1	3	1	1	2	0	4	0	3	1	
west side - Mariposa to Belle	3	2 hr	2	2	2	2	2	2	1	2	2	2	1	2	1	2	0	1	0	0	0	0	0	0	2	0	
west side - Belle to Bolinas	4	2 hr	0	0	0	1	1	3	2	0	3	2	1	2	0	0	0	0	0	1	0	2	0	1	0	1	
east side - Little Tunstead to Little Pine	6	2 hr	0	0	1	3	3	6	6	2	5	4	6	5	6	3	2	3	3	1	4	4	6	5	6	6	
east side - Little Pine to Ross - 3x20 min + 10 reg	13	2 hr	3	2	5	10	10	10	13	10	11	8	8	11	9	8	2	6	7	1	8	1	13	5	13	8	
east side - ADA at Ross	1	2 hr	0	0	0	0	0	0	0	0	0	0	0	0	0	0	0	0	0	0	0	0	0	0	0	0	
east side diagonal - Ross to Bolinas	59	2 hr	3	15	5	20	29	29	28	26	27	20	21	17	14	14	3	5	4	4	2	2	11	1	11	4	
Total - Tunstead to Ross	38		8	6	13	23	27	29	34	20	33	22	27	29	27	23	13	20	21	12	26	18	34	22	35	27	
Average and % Occupancy - Tunstead to Ross	38		7	18%	18	47%	28	74%	27	71%	27.5	72%	28	74%	25	66%	16.5	43%	16.5	43%	22	58%	28	74%	31	82%	66%
Total - Ross to Bolinas	86		7	19	11	25	38	42	34	34	42	30	26	29	20	19	7	10	6	8	6	5	17	4	22	9	
Average and % Occupancy - Ross to Bolinas	86		13.0	15%	18.0	21%	40.0	47%	34.0	40%	36.0	42%	27.5	32%	19.5	23%	8.5	10%	7.0	8%	5.5	6%	10.5	12%	15.5	18%	24%

Location	No. Spaces	Time Limit	8 am to 9 am		9 am to 10 am		10 am to 11 am		11 am to 12 pm		12 pm to 1 pm		1 pm to 2 pm		2 pm to 3 pm		3 pm to 4 pm		4 pm to 5 pm		5 pm to 6 pm		6 pm to 7 pm		7 pm to 8 pm		
Tamalpais Avenue																											
north side - S.A. to Cedar	11	2 hr	2	2	4	5	9	7	9	8	9	10	11	10	10	9	7	10	11	9	10	9	11	11	11	10	Avg Occ
north side - S.A. to Cedar	13	4 hr	7	9	9	11	10	11	9	13	8	8	10	8	9	8	7	8	8	8	13	13	13	11	13	10	10am-8pm
south side - S.A. to Cedar	7	2 hr	3	1	5	1	7	6	6	7	6	5	6	6	7	5	6	6	6	7	7	6	7	7	7	7	
south side - S.A. to Cedar	14	4 hr	7	9	8	7	9	7	8	8	12	7	10	6	9	8	10	7	10	10	14	10	14	10	10	13	
Total	45		19	21	26	24	35	31	32	36	35	30	37	30	35	30	30	31	35	34	44	38	45	39	41	40	
Average and % Occupancy	45		20	44%	25	56%	33	73%	34	76%	32.5	72%	33.5	74%	32.5	72%	30.5	68%	34.5	77%	41	91%	42	93%	40.5	90%	79%
Magnolia Avenue (one way)																											
north side - S.A. to Cedar - was 18	16	4 hr	11	12	9	10	11	10	13	10	10	11	11	12	4	11	12	11	10	10	13	11	14	13	12	13	
Average and % Occupancy	16		11.5	72%	9.5	59%	10.5	66%	11.5	72%	10.5	66%	11.5	72%	7.5	47%	11.5	72%	10	63%	12	75%	13.5	84%	12.5	78%	69%
Tunstead Avenue																											
north side - S.A. to Cedar	5	20 mi	1	5	2	0	1	1	0	1	3	1	2	2	1	2	3	1	3	2	3	1	5	1	5	3	
north side - S.A. to Cedar	8	2 hr	7	6	6	5	7	5	5	7	7	5	4	6	1	3	4	5	4	6	8	7	8	8	6	2	
north side - S.A. to Cedar	1	20 mi	0	0	1	0	1	0	0	0	0	0	0	0	0	0	0	0	0	0	1	0	1	0	1	0	
north side - S.A. to Cedar	5	4 hr	1	1	1	3	2	4	2	2	2	2	4	4	2	3	3	3	3	5	5	5	5	5	5	5	
south side - S.A. to Cedar	15	2 hr	3	3	5	3	11	6	10	4	10	3	7	6	10	4	9	11	9	4	11	12	11	12	11	11	
south side - S.A. to Cedar	8	4 hr	3	5	4	5	6	4	7	2	2	2	2	3	5	3	6	3	6	2	6	1	7	2	6	2	
Tunstead Totals	42		15	20	19	16	28	20	24	16	24	13	19	21	19	15	25	23	25	19	34	26	37	28	34	23	
Average and % Occupancy	42		17.5	42%	17.5	42%	24	57%	20	48%	18.5	44%	20	48%	17	40%	24	57%	22	52%	30	71%	32.5	77%	28.5	68%	56%
San Rafael Avenue																											
north side - S.A. to Myrtle	21	4 hr	5	4	7	5	7	9	6	8	8	7	8	7	7	7	6	7	6	8	7	4	9	3	12	4	
Grove																											
north side grove to myrtle	13	4 hr	3	3	3	3	3	2	2	3	4	2	4	3	4	2	3	2	3	3	3	2	3	1	3	2	
south side - S.A. to Myrtle	38	4 hr	6	5	9	11	7	10	10	9	11	8	11	9	10	9	11	9	12	9	15	9	18	9	15	5	
San Rafael Total	72		14	12	19	19	17	21	18	20	23	17	23	19	21	18	20	18	21	20	25	15	30	13	30	11	
Average and % Occupancy	72		13	18%	19	26%	19	26%	19	26%	20	28%	21	29%	19.5	27%	19	26%	20.5	28%	20	28%	21.5	30%	20.5	28%	28%
Cedar Avenue																											
Tamalpais to Magnolia																											
west side	5	none	3	2	2	2	2	2	2	2	1	2	2	2	2	1	2	2	2	2	1	1	2	2	4	2	
east side	6	none	3	3	5	3	5	3	5	3	5	2	4	2	5	2	5	1	4	1	3	1	5	1	4	1	
Magnolia to Tunstead																											
west side	9	none	4	4	6	4	4	4	4	4	5	4	5	4	4	4	4	4	5	4	3	4	4	4	4	4	
east side	12	none	7	6	6	6	6	4	8	3	6	3	8	2	2	3	7	2	7	2	7	4	7	4	8	2	
Tunstead to Pine																											
west side	0	none																									
east side	6	none	3	4	2	2	2	2	3	2	3	2	3	2	2	2	4	2	4	2	3	2	3	2	4	2	
Pine to Woodland																											
west side	6	none	4	4	3	3	3	3	3	3	3	3	3	2	3	3	4	4	4	4	4	4	4	4	5	4	
east side	0	none																									
Woodland to Ross																											
west side	5	none	4	5	4	5	4	5	3	2	2	2	3	2	2	3	2	3	4	3	3	3	4	3	4	3	
Cedar Total	49		28	28	28	25	26	23	28	19	25	18	28	16	20	18	28	18	30	18	24	19	29	20	33	18	
Average and % Occupancy	49		28	57%	26.5	54%	24.5	50%	23.5	48%	21.5	44%	22	45%	19	39%	23	47%	24	49%	21.5	44%	24.5	50%	25.5	52%	47%

Location		No. Spaces	Time Limit	8 am to 9 am		9 am to 10 am		10 am to 11 am		11 am to 12 pm		12 pm to 1 pm		1 pm to 2 pm		2 pm to 3 pm		3 pm to 4 pm		4 pm to 5 pm		5 pm to 6 pm		6 pm to 7 pm		7 pm to 8 pm		
Pine Street	north side - S.A. to Cedar	3	20 mi	0	0	0	0	1	1	3	0	3	0	2	0	2	0	0	1	0	0	0	0	2	1	3	2	Avg Occ
	north side - S.A. to Cedar	6	2 hr	0	0	0	1	1	3	1	4	2	3	1	2	3	3	1	3	1	2	1	1	3	1	6	2	10am-8pm
	south side - S.A. to Cedar	17	2 hr	11	9	11	11	10	11	9	9	10	11	8	11	11	8	9	8	8	8	9	12	11	11	15	11	
	Total	26		11	9	11	12	12	15	13	13	15	14	11	13	16	11	10	12	9	10	10	13	16	13	24	15	
	Average and % Occupancy	26		10	38%	11.5	44%	13.5	52%	13	50%	14.5	56%	12	46%	13.5	52%	11	42%	9.5	37%	11.5	44%	14.5	56%	19.5	75%	51%
Woodland Ave	north side - S.A. to Cedar	2	2 hr	2	2	2	2	2	2	2	2	2	2	2	2	2	2	2	2	2	2	2	2	2	2	2	2	
	north side - S.A. to Cedar	5	4 hr	4	5	4	4	4	4	5	3	4	1	3	2	2	2	3	4	3	2	3	2	5	5	4	5	
	south side - S.A. to Cedar	8	4 hr	6	7	6	7	6	7	7	5	7	6	7	7	7	6	5	6	6	3	7	4	7	5	7	6	
	Total	15		12	14	12	13	12	13	14	10	13	9	12	11	11	10	10	12	11	7	12	8	14	12	13	13	
	Average and % Occupancy	15		13	87%	12.5	83%	12.5	83%	12	80%	11	73%	11.5	77%	10.5	70%	11	73%	9	60%	10	67%	13	87%	13	87%	76%
Ross Avenue	north side - S.A. to Cedar	22	2 hr	20	13	21	16	22	15	21	14	21	13	18	14	16	12	16	9	12	9	12	8	11	8	13	8	
			none																									
	south side - S.A. to Cedar	8	2 hr	7	0	8	0	6	2	3	3	5	2	5	3	4	1	7	0	1	1	2	1	0	1	1	1	
	south side - S.A. to Cedar	13	none	6	11	6	12	7	11	10	11	10	11	11	10	12	9	7	10	8	8	7	7	9	8	9	7	
	Total	43		33	24	35	28	35	28	34	28	36	26	34	27	32	22	30	19	21	18	21	16	20	17	23	16	
	Average and % Occupancy	43		28.5	66%	31.5	73%	31.5	73%	31	72%	31	72%	30.5	71%	27	63%	24.5	57%	19.5	45%	18.5	43%	18.5	43%	19.5	45%	58%
Mariposa Avenue	north side - S.A. to Richmond	18	2 hr	10	10	8	8	14	8	13	7	13	9	8	9	11	8	10	9	12	10	12	10	10	9	9	9	
	north - ADA	1	n/a	0	0	0	0	0	0	1	0	0	0	0	0	0	0	0	0	0	0	0	0	0	0	0	0	
	north side	0	none																									
	south side - S.A. to Richmond	11	2 hr	4	3	5	5	4	5	5	7	6	6	6	5	6	5	3	7	2	7	4	5	3	5	3	5	
	white zone	11	n/a	0	2	0	1	1	1	2	1	3	1	1	1	1	1	1	1	0	2	0	2	2	1	3	1	
			n/a																									
	Total	41		14	15	13	14	19	14	21	15	22	16	15	15	18	14	14	17	14	19	16	17	15	15	15	15	
	Average and % Occupancy	41		14.5	35%	13.5	33%	16.5	40%	18	44%	19	46%	15	37%	16	39%	15.5	38%	16.5	40%	16.5	40%	15	37%	15	37%	40%
Belle Avenue	north side - S.A. to Richmond	10	2 hr	8	7	8	9	7	9	10	8	8	9	6	8	6	7	5	8	5	6	5	5	2	7	5	5	
	white zone	13	n/a	4	7	6	6	8	5	9	9	8	9	3	7	3	4	1	5	1	4	1	5	6	5	2	7	
	south side - S.A. to Richmond	1	20 mi	0	0	0	0	0	1	0	0	1	0	0	0	0	0	0	0	0	0	0	0	0	0	0	0	
	south side - S.A. to Richmond	4	2 hr	2	0	2	1	1	3	2	0	3	1	2	2	4	0	0	0	0	0	2	0	0	0	1	1	
	south side - S.A. to Richmond	13	none	13	10	12	10	11	10	10	11	10	11	11	11	10	10	10	8	8	8	8	8	12	8	13	8	
	Total	41		27	24	28	26	27	28	31	28	30	30	22	28	23	21	16	21	14	18	16	18	20	20	21	21	
	Average and % Occupancy	41		25.5	62%	27	66%	27.5	67%	29.5	72%	30	73%	25	61%	22	54%	18.5	45%	16	39%	17	41%	20	49%	21	51%	55%
SFD -	west side - Hub to Bank	10	4 hr	0	1	3	1	8	2	7	1	9	2	9	2	10	2	10	4	9	5	10	4	10	8	10	7	
	west side - Bank to Tunstead	1	20 mi	0	0	0	0	0	1	0	0	0	0	0	0	0	0	1	0	1	0	1	0	1	0	1	0	
	west side - Bank to Tunstead	3	2 hr	0	1	1	1	2	2	1	1	3	1	3	3	3	0	3	2	3	3	3	2	3	3	3	3	
	west side - Tunstead to Pine	2	20 mi	2	0	0	0	0	1	0	0	2	1	1	2	0	1	0	2	0	0	1	2	2	1	2	2	
	west side - Tunstead to Pine	2	2 hr	0	0	1	0	1	1	1	0	2	1	1	1	0	0	0	1	2	1	2	1	2	1	1	2	
	west side - Pine to Ross	7	none	0	2	0	2	0	3	3	7	5	6	4	7	4	7	4	7	7	6	5	6	7	7	7	7	
	west side - Ross to Bolinas	35	none	7	4	13	6	15	8	15	9	15	9	10	9	9	7	9	7	7	5	7	6	6	6	6	8	
	east side - Hub to Bank	5	2 hr	0	0	0	0	0	0	0	0	0	0	0	0	0	0	0	0	1	0	5	0	4	0	3	0	
	east side - Bank to Tunstead - 5 + 3 loading 6-noon	8	2 hr	0	0	1	1	4	0	3	2	5	4	4	6	7	2	8	5	8	5	8	6	8	5	5	6	
	east side - Tunstead to Barber	13	4 hr	2	2	4	4	6	6	5	5	9	6	4	7	6	6	3	4	4	6	6	8	6	6	9	8	
	east side - Barber to Bolinas	1	20 mi	1	1	1	1	1	1	1	1	1	1	1	1	1	1	1	1	0	0	1	0	0	0	1	0	
	east side - Barber to Bolinas	2	4 hr	2	2	2	2	2	2	2	2	2	2	2	2	2	2	2	2	0	0	1	0	1	0	1	1	
	east side - Barber to Bolinas	28	none	7	8	9	9	8	8	6	11	6	11	6	12	9	8	6	7	4	5	6	6	5	6	8	7	
	Total - Hub to Ross Ave	51		4	6	10	9	21	16	20	16	35	21	26	28	30	18	29	25	35	26	41	29	43	31	41	35	
	Average and % Occupancy	51		5	10%	9.5	19%	18.5	36%	18	35%	28	55%	27	53%	24	47%	27	53%	30.5	60%	35	69%	37	73%	38	75%	55%
	Total - Ross Ave to Bolinas Ave	66		17	15	25	18	26	19	24	23	24	23	19	24	21	18	18	17	11	10	15	12	12	12	16	16	
	Average and % Occupancy	66		16	24%	21.5	33%	22.5	34%	23.5	36%	23.5	36%	21.5	33%	19.5	30%	17.5	27%	10.5	16%	13.5	20%	12	18%	16	24%	27%
	Total	**793**		**257**	**268**	**332**	**327**	**427**	**405**	**464**	**395**	**505**	**376**	**428**	**400**	**416**	**332**	**363**	**329**	**357**	**317**	**387**	**332**	**450**	**360**	**475**	**388**	
	North Downtown	538		179	184	241	232	304	289	341	281	372	264	330	291	318	250	294	254	303	253	325	272	377	300	391	319	
	South Downtown	255		78	84	91	95	123	116	123	114	133	112	98	109	98	82	69	75	54	64	62	60	73	60	84	69	
		793		**257**	**268**	**332**	**327**	**427**	**405**	**464**	**395**	**505**	**376**	**428**	**400**	**416**	**332**	**363**	**329**	**357**	**317**	**387**	**332**	**450**	**360**	**475**	**388**	

288 spaces avail
166 spaces DT north
122 spaces DT South

Town of San Anselmo - September 2021
Downtown Parking Study - NDS Counts - weekend

At Peak Hour (1 pm to 2 pm)

30%

	Mag. Ave Lot		SR Ave		Tam. Ave		Mag. Ave		Tunstead Ave		SA Ave		Creek Park		SFD		Cedar Ave		Pine St		Pine St Lot		Woodland Ave		Ross Ave		Total Spaces	Occup	
North	Inv	Count	Inv	Count	Inv	Count	Inv	Count	Inv	Count	Inv	Count	Inv	Count	Inv	Count	Inv	Count	Inv	Count	Inv	Count	Inv	Count	Inv	Count	Total		
unreg															7	5.5	49	22					5	2.5			61	30	49.2%
4 hr	28	16.5	72	21	27	17	16	11.5	13	6.5			45	30	23	11							10	9			234	122.5	52.4%
2 hr					18	16.5			23	11.5	89	73.5			18	9			23	11	26	12			22	16	219	149.5	68.3%
20 min									6	2	3	2			3	1.5			3	1							15	6.5	43.3%
ADA	2	0									3	1	2	0							2	0.5					9	1.5	16.7%
Total	30	16.5	72	21	45	33.5	16	11.5	42	20	95	76.5	47	30	51	27	49	22	26	12	28	12.5	15	11.5	22	16	**538**	310	57.6%
Occup	16.5	55%	21	29%	33.5	74%	11.5	72%	20	48%	75.5	79%	31	65%	27	53%	22	45%	12	46%	12.5	45%	11.5	77%	16	75%	310		

South	Ross		Mari		Belle		SA		SFD		Tot. Spaces		Occup			
unreg	13	10.5	11	1	26	16			63	18.5	113		46	41%		
4 hr									2	2	2		2	100%		
2 hr	8	4	29	14	14	9	79	25			130		52	40%		
20 min					1	0	6	2.5	1	1	8		3.5	44%		
ADA			1	0			1	0			2		0	0%		
Total	21	14.5	41	15	41	25	86	27.5	66	21.5	255		103.5	41%		
Occup	14.5	69%	15	37%	25	61%	27.5	32%	21.5	33%			104	41%	**152**	**spaces avail**

229 **spaces avail**

Prepared by National Data & Surveying Services

Duration Study

Project: 21-080203
City: San Anselmo, CA

Date: 9/2/2021
Day: Thursday

Segment	Space Type	Space	Time					Duration				
			10:00AM	11:00AM	12:00PM	1:00PM	2:00 PM	0 - 1 HRS	1 - 2 HRS	2 - 3 HRS	3 - 4 HRS	4 - 5 HRS
10	2 Hr Parking 7am-6pm	1	S262			X374	8261	3				
10	2 Hr Parking 7am-6pm	2	N424	X	X	9K26	W012	2		1		
10	2 Hr Parking 7am-6pm	3	4158	X	X	X	X					1
11	2 Hr Parking 7am-6pm	1	X241	U616	H966	L723		4				
11	2 Hr Parking 7am-6pm	2	7238	X	X	X	U235	1			1	
11	2 Hr Parking 7am-6pm	3	G126	T436	C304	93M0	X693	5				
11	2 Hr Parking 7am-6pm	4	W240	X	A884	X			2			
11	2 Hr Parking 7am-6pm	5	1C55	X	R525	N926	5281	3	1			
12	Handicap Van Accessible	1	RJCJ				36TT	2				
12	2 Hr Parking 7am-6pm	1	B578	V366	F646	S710		4				
12	2 Hr Parking 7am-6pm	2	W249	X	X	X	X					1
12	2 Hr Parking 7am-6pm	3	C386	K917	S359	R872	A013	5				
12	2 Hr Parking 7am-6pm	4	P786	X	X	H731	PSTR	2		1		
13	2 Hr Parking 7am-6pm	1	L442	77A1	X	X	W552	2		1		
13	2 Hr Parking 7am-6pm	2	V272	Z838	W706	R784	W153	5				
13	2 Hr Parking 7am-6pm	3	17RF	U716	N592	B317	X	3	1			
13	2 Hr Parking 7am-6pm	4	R082	M987	X	E035	YBBR	3	1			
13	2 Hr Parking 7am-6pm	5	K381	THLR	L426	K642	X	3	1			
13	2 Hr Parking 7am-6pm	6	W505	P532	0N49	X	X	2		1		
13	2 Hr Parking 7am-6pm	7	LICK	M547	Y539	J598	U099	5				
13	2 Hr Parking 7am-6pm	8	D047	X	W342	X	G596	1	2			
13	2 Hr Parking 7am-6pm	9	M089	X	X	Z109	J100	2		1		
13	2 Hr Parking 7am-6pm	10	S145	X	80X0	4841	V048	3	1			
13	2 Hr Parking 7am-6pm	11	G006	1931	U841	X	X	2		1		
13	2 Hr Parking 7am-6pm	12	E570	GQ64	X	X	G659	2		1		
14	2 Hr Parking 7am-6pm	1	U327	X201	X	X	X	1			1	
14	2 Hr Parking 7am-6pm	2	Y368	4094	S611	X	F121	3	1			
14	2 Hr Parking 7am-6pm	3	Z778	19D0	X	D047	H087	3	1			
14	2 Hr Parking 7am-6pm	4	Z109	X	X	X	H535	1			1	
14	2 Hr Parking 7am-6pm	5	G479	X	M457	M089	D047	3	1			
14	2 Hr Parking 7am-6pm	6	*Occupied by outdoor dining*									
14	2 Hr Parking 7am-6pm	7	Z880	Z019	X	K951	M079	3	1			
14	2 Hr Parking 7am-6pm	8	C143		P455	A9GC	Z212	4				
14	2 Hr Parking 7am-6pm	9	5883	F872	V048	C914	X	3	1			
14	2 Hr Parking 7am-6pm	10	K810	X	U716	N392		2	1			
14	2 Hr Parking 7am-6pm	11	S2WN	X	G697	27Z0	Z880	3	1			
14	2 Hr Parking 7am-6pm	12		7Z60				1				
14	20 Min Parking 6am-6pm	1		D0Z1			S224	2				
15	2 Hr Parking 7am-6pm Sundays and Holidays Exempt	1		F266	60ED	F771	N162	4				
15	2 Hr Parking 7am-6pm Sundays and Holidays Exempt	2		L824		R311	N821	3				
15	2 Hr Parking 7am-6pm Sundays and Holidays Exempt	3	U372	S851	X	X		1		1		
15	2 Hr Parking 7am-6pm Sundays and Holidays Exempt	4	25K2		THFU	5890	88X0	4				
15	2 Hr Parking 7am-6pm Sundays and Holidays Exempt	5	W131		B450	1C55	X	2	1			
15	2 Hr Parking 7am-6pm Sundays and Holidays Exempt	6	28A3	X	H713	D422	F185	3	1			
15	2 Hr Parking 7am-6pm Sundays and Holidays Exempt	7		H696	X	Z774		1	1			
15	2 Hr Parking 7am-6pm Sundays and Holidays Exempt	8		H156	X	P385	O276	2	1			
15	2 Hr Parking 7am-6pm Sundays and Holidays Exempt	9	8703	X	X	X					1	
16	2 Hr Parking 7am-6pm / Compact Only	1	W529	X	X	E134	SUBT	2		1		
16	2 Hr Parking 7am-6pm / Compact Only	2	U832	J179	X	X	J370	2		1		
16	2 Hr Parking 7am-6pm / Compact Only	3	FD41	X		U567		1	1			
16	2 Hr Parking 7am-6pm / Compact Only	4	89B2	X	R559	Y876		2	1			
16	2 Hr Parking 7am-6pm / Compact Only	5	44Z0	X	Z651	X	8037	1	2			
16	2 Hr Parking 7am-6pm / Compact Only	6	08UO	U634	X	56T2	J856	3	1			
16	2 Hr Parking 7am-6pm / Compact Only	7	47T0	X	X	T384		1		1		
16	2 Hr Parking 7am-6pm / Compact Only	8	J295	X	0PET	M836	H462	3	1			
16	2 Hr Parking 7am-6pm / Compact Only	9	N539	X	9752	A143	M193	3	1			
16	2 Hr Parking 7am-6pm / Compact Only	10	RD33	J631	F773	V795	TI58	5				
16	2 Hr Parking 7am-6pm / Compact Only	11			3BUB	X	ED34	1	1			
17	2 Hr Parking 7am-6pm Sundays and Holidays Exempt	1		J520	T264	Z238	57X0	4				
17	2 Hr Parking 7am-6pm Sundays and Holidays Exempt	2	28A1	X	X	X	X					1
17	2 Hr Parking 7am-6pm Sundays and Holidays Exempt	3			S001	F040	X	1	1			
17	2 Hr Parking 7am-6pm Sundays and Holidays Exempt	4	B338	X		ZANN	X		2			
17	2 Hr Parking 7am-6pm Sundays and Holidays Exempt	5	P780	X	U062	D826	X	1	2			
17	2 Hr Parking 7am-6pm Sundays and Holidays Exempt	6	N517	L426		X435		3				
17	2 Hr Parking 7am-6pm Sundays and Holidays Exempt	7	D002	B947		6M14	Z376	4				
18	2 Hr Parking 7am-6pm	1	F119	X	X	X	X					1
18	2 Hr Parking 7am-6pm	2	B399	P897	D386	M733	X765	5				
18	2 Hr Parking 7am-6pm	3	B450		G186	6351	G601	4				
18	2 Hr Parking 7am-6pm	4	J830	X	X	G458	X		1	1		
18	2 Hr Parking 7am-6pm	5		V354	M021	X	X	1		1		
18	2 Hr Parking 7am-6pm	6	A074	G947	2914	F563	Y744	5				
19	2 Hr Parking 7am-6pm	1	X838	A631		6K45	P585	4				
19	2 Hr Parking 7am-6pm	2	MBRD	F122		D368	R555	4				
19	2 Hr Parking 7am-6pm	3	A923	B867	X	X	X	1			1	
19	2 Hr Parking 7am-6pm	4	W083	3350	E899	D917	N450	5				
19	2 Hr Parking 7am-6pm	5	H413	V764	X		W508	2	1			
20	20 Min Parking 7am-6pm Sundays and Holiday Exempt	1		N614	COXN	J686	76V0	4				
20	20 Min Parking 7am-6pm Sundays and Holiday Exempt	2		V764	G571		S838	3				
20	20 Min Parking 7am-6pm Sundays and Holiday Exempt	3		2255	31Z1		G888	3				
20	2 Hr Parking 7am-6pm	1	J237	X125	G232	U645	X	3	1			
20	2 Hr Parking 7am-6pm	2			Z118	X	X			1		
20	2 Hr Parking 7am-6pm	3	171Z	V719	F014	C835	X	3	1			
20	2 Hr Parking 7am-6pm	4	T487	E067	K580	S656	W628	5				
20	2 Hr Parking 7am-6pm	5	TESQ	T949	X	D576	IVEW	3	1			
20	2 Hr Parking 7am-6pm	6				H269		1				
20	2 Hr Parking 7am-6pm	7			75YH	42W2	C776	3				
20	2 Hr Parking 7am-6pm	8		S883	C863	T949	X	2	1			
20	2 Hr Parking 7am-6pm	9	R384	U791	P214	S722	X	3	1			
20	2 Hr Parking 7am-6pm	10	U677	J805		K384	4652	4				
21	Handicap Van Accessible	1										
21	2 Hr Parking 7am-6pm	1	D801			N770		2				
21	2 Hr Parking 7am-6pm	2	6012	D071	J137	P884		4				
21	2 Hr Parking 7am-6pm	3		M191		Z657		2				
21	2 Hr Parking 7am-6pm	4		E656	G524		P884	3				
21	2 Hr Parking 7am-6pm	5	0L02		P215		63U2	3				

Prepared by National Data & Surveying Services

Duration Study

Project: 21-080203 **City:** San Anselmo, CA

Duration		0 - 1 HRS	1 - 2 HRS	2 - 3 HRS	3 - 4 HRS	4 - 5 HRS
Thursday	Number of Vehicles	232	40	14	5	4
	Percentage of total	78.6%	13.6%	4.7%	1.7%	1.4%

Q1 Are you a:

Answered: 537 Skipped: 0

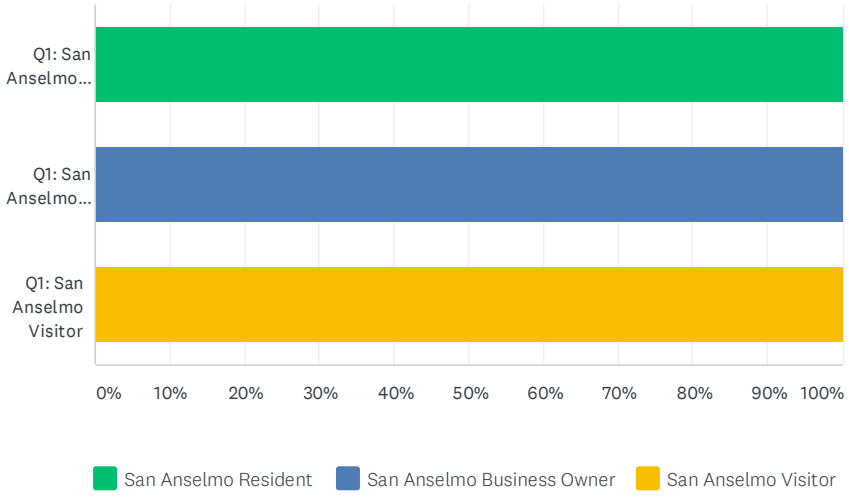

	SAN ANSELMO RESIDENT	SAN ANSELMO BUSINESS OWNER	SAN ANSELMO VISITOR	TOTAL
Q1: San Anselmo Resident	100.00% 430	0.00% 0	0.00% 0	80.07% 430
Q1: San Anselmo Business Owner	0.00% 0	100.00% 35	0.00% 0	6.52% 35
Q1: San Anselmo Visitor	0.00% 0	0.00% 0	100.00% 72	13.41% 72
Total Respondents	430	35	72	537

Q2 Have you utilized any of the existing parklets in San Anselmo?

Answered: 536 Skipped: 1

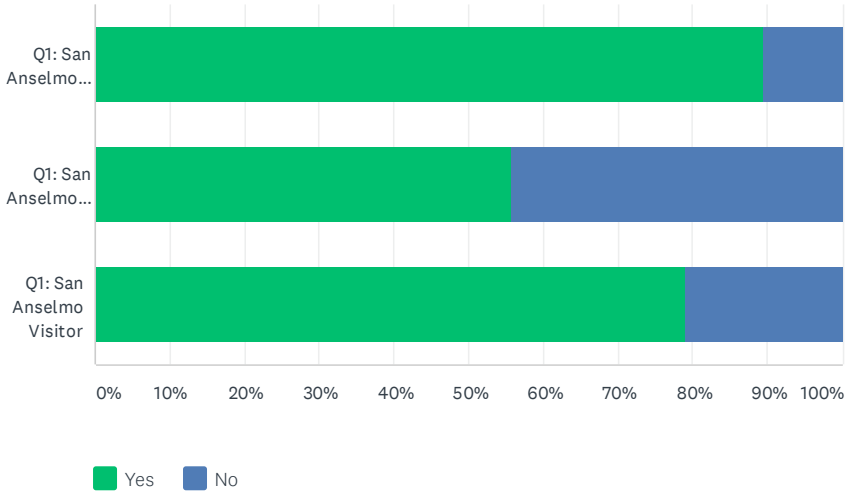

	YES	NO	TOTAL
Q1: San Anselmo Resident	89.53% 385	10.47% 45	80.22% 430
Q1: San Anselmo Business Owner	55.88% 19	44.12% 15	6.34% 34
Q1: San Anselmo Visitor	79.17% 57	20.83% 15	13.43% 72
Total Respondents	461	75	536

Q3 Would you like to see parklets become long-term in the town of San Anselmo?

Answered: 534 Skipped: 3

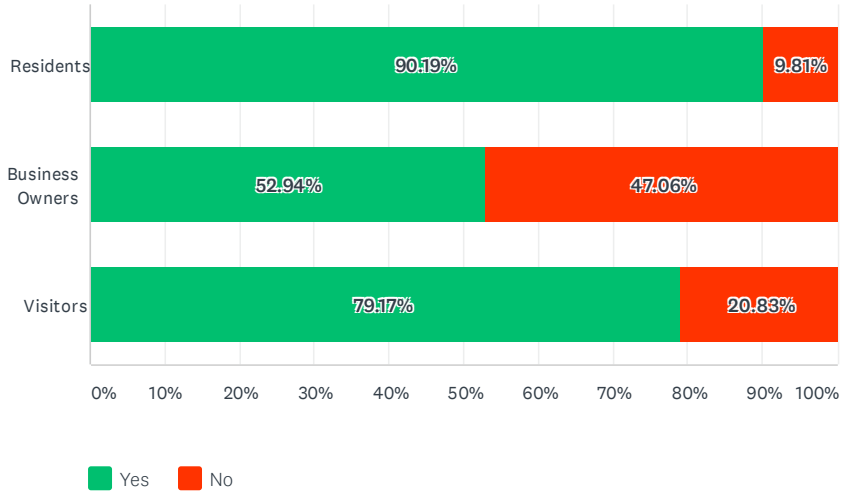

	YES	NO	TOTAL
Residents	90.19% 386	9.81% 42	80.15% 428
Business Owners	52.94% 18	47.06% 16	6.37% 34
Visitors	79.17% 57	20.83% 15	13.48% 72
Total Respondents	461	73	534

Q4 Are you concerned about the availability of parking should parklets become long-term?

Answered: 537 Skipped: 0

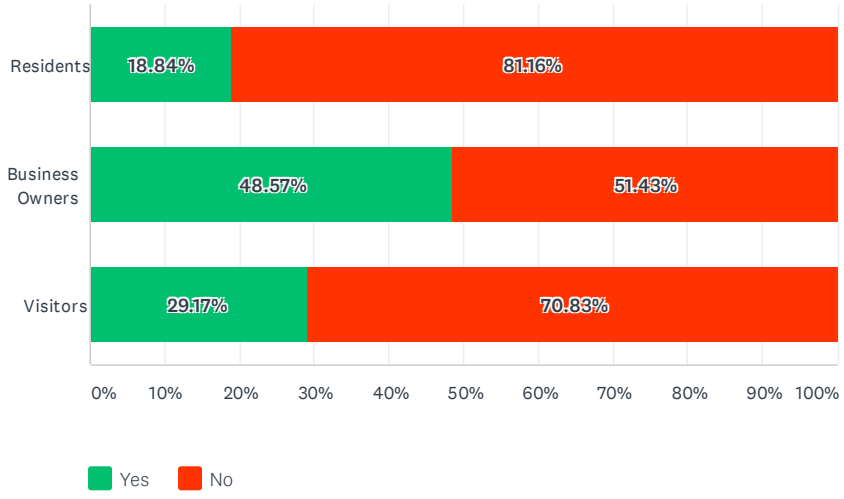

	YES	NO	TOTAL
Residents	18.84% 81	81.16% 349	80.07% 430
Business Owners	48.57% 17	51.43% 18	6.52% 35
Visitors	29.17% 21	70.83% 51	13.41% 72
Total Respondents	119	418	537

Q5 Please share any suggestions or feedback on the subject:

Answered: 321 Skipped: 216

	PLEASE SHARE ANY SUGGESTIONS OR FEEDBACK ON THE SUBJECT:	TOTAL
Q1: San Anselmo Resident	100.00% 242	75.39% 242
Q1: San Anselmo Business Owner	100.00% 32	9.97% 32
Q1: San Anselmo Visitor	100.00% 47	14.64% 47
Total Respondents	321	321

ONGOING PARKLET PROGRAM
AGREEMENT & GUIDELINES

CITY OF HEALDSBURG
CALIFORNIA
SINCE 1867

TABLE OF CONTENTS

Introduction 03
Eligible Businesses 03
Program Limitations 03
Activation 04
Definitions 04
Encroachment
- Use of Public Right-of-Way 04
- Allowable Configurations 05
- Use of Private Property 06

Parklet Amenities
- Canopies 06
- Heating Devices 07
- Lighting 08
- Maintenance & Landscaping 09
- Seating 09
- Sidewalls: The 50% Rule 10
- Signage 11

Construction
- Curb Interface 12
- Public Utility 12
- Road Barriers 12
- Site Line 13

Emergencies & City Repair 14
General Permit Process 15
- Associated Fess & Costs 16
- Neighbor Notification, Approval, and Complaints 17
- Map & Layout Requirements 17
- Insurance Requirements 18
- Insurance Checklist 19
- Additional Permits & Requirements 20
- Timeline 21

Parklet Inspection 21
Terms & Conditions 22
Violations 23
Appeal 23
Signature 23

Appendix A: ADA Seating Requirements 24
Appendix B: Sample Parklet Site Plans 28
Appendix C: Parklet Design Samples 35
Appendix D: Healdsburg Flood Hazard Zones 36
Appendix E: Self-Inspection Checklist 37

City of Healdsburg
401 Grove Street
Healdsburg, CA 95448
707.431.3346

ONGOING PARKLET PROGRAM – AGREEMENT & GUIDELINES

INTRODUCTION

In 2022, Healdsburg City Council approved the Ongoing Parklet Program (OPP) with the aim to increase activity and vibrancy in the downtown area. This program serves to provide some businesses the privilege of extending their operation to some public outdoors spaces on an ongoing basis under these guidelines **effective January 1, 2023.**

Any work on public property must have an Encroachment Permit and your Parklet Permit allows you to encroach into the public right-of-way. Parklets that require use of private property need to obtain permission from the property owner, follow these guidelines, and may require additional permits.

Please review the following Ongoing Parklet Program - Agreement & Guidelines as it provides requirements and timelines for applicants. All applicants must complete a parklet permit application, provide all require supplementary materials, and sign this document confirming that they understand all the necessary requirements in building, operating, and maintaining an outdoor parklet in the City of Healdsburg. Please note that these guidelines are subject to change. If you have any questions regarding the program, please contact Engineering Technician, Mitchell Wilson at mwilson@healdsburg.gov or by calling 707.431.3346.

ELIGIBLE BUSINESSES

The following criteria is required to apply:

- Your proposed parklet is located in the downtown core.
- You are applying as a restaurant, tasting room, or retail business.
- All permits for your business location are up-to-date and in good standing.

Each request for a parklet is unique and will require individual review and approval. Businesses wanting to establish a parklet should recognize that the program is ongoing in nature and is renewable annually; having been issued Parklet Permit does not assume that you may continue to operate a parklet in perpetuity. All businesses should evaluate the cost-benefit of maintaining an outdoor parklet along with any design and installation costs. **Permits may be terminated, revoked, or amended at any time at the sole discretion of the City Manager.**

Merchants who only use the sidewalk to display wares, or other businesses that put out a small table or bench but do not provide service to those seating areas, will not be considered a parklet. They will be required to maintain an annual encroachment permit with current insurance and indemnity.

PROGRAM LIMITATIONS

The following program limitations will apply:

- The Ongoing Parklet Program cannot permit more than 5% of the total 1,416 available on-street and off-street public parking stalls in the downtown core as defined by the 2017-18 parking study conducted by Walker Parking Consultants, which equates to roughly 70 parking stalls.
- Parklet requests will be reviewed based on the overall number in the downtown core and concentration of nearby parklets.
- The Ongoing Parklet Program will undergo a thorough program review in 2025 for possible modification or termination as determined by Healdsburg City Council.

ACTIVIATION

One of the aims of the Ongoing Parklet Program is to increase vibrancy in the downtown area. To meet this purpose businesses are **required** to activate their parklet and show consistent use of their parklet in **all** of the following ways:

- Parklet owner must detail their plan for activating their parklet space on their permit application.
- Parklet must be in use a minimum 5-days a week.
- Parklet must be made available to customers during all hours of business operation.
- Parklet owner is responsible for activating their parklet space to ensure its regular use.

As part of the regular inspection process, the City will note usage levels to be used as data when determining possible parklet renewal. Consideration will be made if the weather at time of inspection is not conducive for outdoor use.

DEFINITIONS

Adjacent Business	A business that shares one or more common walls with another business or is located next door on either side of another business (i.e., if separated by a walkway, alley, driveway, etc.).
Canopy	A structure or architectural projection of rigid construction over which a covering is attached that provides weather protection, identity or decoration, and may be structurally independent or supported by attachment to a building on one end and by not less than one stanchion on the outer end.
Closed Sidewall	Any side covering, drape, wall, screen, partition, tarp, fence or other vertical obstruction, other than posts, poles or other narrow support elements, that are between 42”-90” in height of canopy.
Opening, or Open Sidewall	For the purposes of these guidelines, an “opening” is an unobstructed area that allows for the free passage of outside air and is no less than 48”.
Outdoors	A space located outside the confines of an enclosed building that allows for ample outside air circulation.
Parklet	A parklet is a small portion of public space (i.e., parking stalls, sidewalk, or public right-of-way) that has been reappropriated to serve as an extension of one or more commercial businesses, and incorporates non-permanent materials and amenities.
Partial Obstruction	For the purposes of these guidelines, a “partial obstruction” is any vertical obstruction, including, but not limited to, vertical materials, fabrics, tarps, partitions, screens, fences, planters, railings, water walls and similar vertical obstructions or elements that are under or within 5’ of the perimeter of a canopy are less than 42” in height from the ground or floor on which it rests and is provided with not less than 48” of clear opening height above the obstruction.
Tent	A structure, enclosure, umbrella structure or shelter, with or without sidewalls or drops, constructed of fabric or pliable material supported by any manner except by air or the contents that it protects.

ENCROACHMENT INTO PUBLIC RIGHT-OF-WAY

Businesses seeking to encroach into the public right-of-way for purposes of conducting business in compliance with State and local social distancing requirements, shall execute a Parklet Permit Agreement in lieu of obtaining an encroachment permit and as required by HMC Ch. 12.12.

ALLOWABLE CONFIGURATIONS

Parallel Parklet:
These parklets utilize parallel parking spaces. Parklets typically are limited to a business's frontage but can extend further if supported by neighboring businesses. The approximate depth of usable space from the curb is 7' (or to within 1.5' of the outside edge of the parking stall striping).

Sidewalk seating may be incorporated into a parallel parklet layout or design.

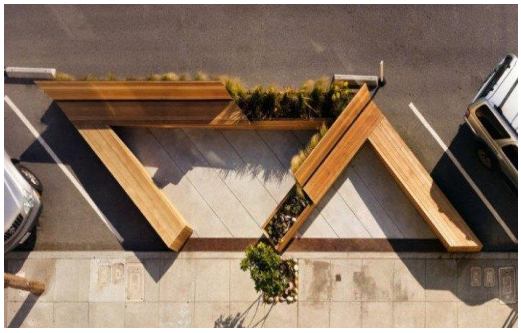

Diagonal Parklet:
These parklets utilize diagonal parking spaces. Parklets typically are limited to a business's frontage but can extend further if supported by neighboring businesses. The approximate depth of usable space from the curb will vary but is typically 17' (or to within 1.5' of the outside edge of the parking stall striping).

Sidewalk seating may be incorporated into a parallel parklet layout or design.

Sidewalk Parklet:
These parklets use sidewalk areas adjacent to the business that allow space for outdoor dining, beverage service, or retail. You must always keep a 48" walkway open for pedestrians and not allow customers to move chairs or tables to infringe on the public walkway.

Merchants who only use the sidewalk to display wares, or other businesses that put out a small table or bench but do not provide service to those seating areas, will not be considered a parklet. They will be required to maintain an annual encroachment permit with current insurance and indemnity.

Realignment Parklet:
This approach utilizes parking spaces to create a safe reroute for pedestrians to travel out and around the service area of the sidewalk allowing full seating and use of the sidewalk area. Sidewalk extensions must accommodate accessibility requirements. Sidewalk extensions need to be a minimum of 48" in depth from the curb and need to be ADA compliant.

Note: The above configurations are not exclusive as every location is unique and will require individual review. The City will determine the public space allowed for each business and the appropriate configuration. See *Appendix B* for sample layout and *Appendix C* for sample designs.

USE OF PRIVATE PROPERTY

Nothing in your permit relieves a business from any obligations or laws requiring consent of adjacent property owners for use of private property. Businesses seeking to operate outdoors shall obtain consent of any private property owners whose property will be used for outdoor operations; A signature from the property owner is required for a permit.

CANOPIES

General Guidelines:

- All canopies require a Building Permit and must be inspected.
- Canopies must be rigid and have a fire-resistant certification or flame certification showing material is in compliance with either California State Fire Marshal with approved seal or meets NFPA 701 flame retardant standards.
- Canopies shall not be installed within 5' of buildings unless approved by the fire code official.
- If heating devices will be used under canopies, the fire code official must provide an inspection. The use of propane heaters requires a permit from the fire code official.
- The layout or a diagram of outdoor canopies must be shown on the permit application.
- Canopy installations shall not obstruct fire apparatus access to existing buildings or fire protection appurtenances (e.g., fire hydrants, FDC's, etc.).
- Areas open to the public under canopies must be made accessible to individuals with disabilities. The head clearance under canopies is 90' (ideally 96').
- There shall be a clearance of not less than 3' surrounding the parklet at all times.
- Outdoor canopies open to the public must have openings to allow airflow as provided in these guidelines. The combined sidewall area (all 4 sides) shall not have less than 50% of clear unobstructed opening at all times.
- If the building address is obstructed by a canopy, applicant must provide addressing that is visible from the public street and must be approved by the fire code official.
- Canopy shall be properly anchored or ballasted in accordance with manufactures guidelines, structural calculations or as otherwise approved by the fire code official. The formula [(L x W) x 5lbs = total ballast required] may be used to determine total ballast for canopies.
- The following weights for filled water barrels may used for providing ballasts:
    - Water barrels top tied only = 192 lbs. each
    - Water barrels top tied and bottom strapped to leg = 336 lbs. each
- Canopy permits are revocable by the fire code official for non-compliance with these guidelines.

IMPORTANT: Temporary tenting is not allowed. No exceptions.

HEATING DEVICES

Outdoor heaters and elements that use electricity or propane fuel can help to make your parklet more comfortable throughout the year. Heating features are allowed in parklets but will require an additional permit from the Fire Department. Please note the following for all heating types:

- The location and type of all heating equipment must be shown on your permit application diagram/drawing.
- The fire code official or their designee will inspect all heating devices regardless of size.
- Heating appliances must be listed and used in accordance with manufactures guidelines, these guidelines, and the California Building Standards Code.

Portable Electric Space Heaters.

Portable, electric space heaters are allowed when operated only in locations for which they are listed. Portable, electric space heaters shall be located at least 3' from any combustible materials, including sidewalls, ceilings, umbrellas, and all other combustible materials.

Portable Outdoor Gas-Fired Heaters (i.e., propane or natural gas). Portable outdoor gas-fired heating appliances for businesses may only be used when Fire Department requirements are met <u>and</u> the canopy is provided with one side that is completely open <u>and</u> the combined sidewall area (all 4 sides) is not less than 50% of clear unobstructed opening as determined by the fire code official. A propane permit must be obtained by the fire code official prior to the installation and use of portable outdoor gas-fired heating appliances within a canopy.

Portable outdoor gas-fired heating appliances are not permitted within 3' horizontal and vertical distance from sidewalls, ceilings, canopies, or buildings and shall be kept a minimum of 5' horizontal distance from exits of canopies or buildings.

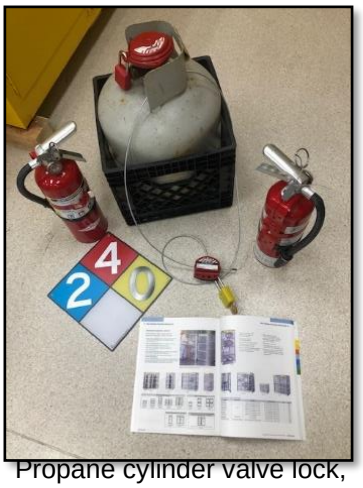

Propane cylinder valve lock, NFPA 704 diamond, fire extinguisher with maintenance tag, cable lock, milkcrate, propane cabinets.

Liquid Petroleum (LP) Gas (*Propane*):

- Propane shall be stored and used in accordance with the California Fire Code and must be stored within the parklet.
- A propane permit has been issued by the Fire Department
  - Electronically report and apply for a Hazardous Materials CUPA permit online.
  - Tanks installed in listed appliances or alone may be stored in a secured location outside the business.
  - Tanks not installed on or in listed appliances shall be in milk crates or similar stabilization containers, nested, or secured top and bottom
  - The portable outdoor listed appliances can be secured by nesting them in the center of the parklet with the propane turned off, the access doors facing in and chained together to prohibit tampering.
  - Storage shall not be within 10' of ventilation intakes, doors, windows or ignition sources
  - Storage areas shall be posted "No Smoking or Open Flame"
  - Propane shall not be used inside buildings at any time.
- Propane tanks used shall not exceed 5-gallon water capacity.
- The permitted number of propane tanks shall not exceed five (5) tanks total (in use and in storage at any one time - empty tanks are considered full and count towards total).
- Propane tanks shall be adequately protected to prevent tampering, damage by vehicles or other hazards and shall be in an approved location not less than 5' from canopy, sidewalls, and ceilings. Propane tanks shall be located not less than 5' from a means of egress (exit).

LIGHTING

Lights can be a wonderful way to create ambiance within the parklet. Lights can be installed within the parklet and over the sidewalk by incorporating a post element into your parklet design railing treatment.

- Lighting is allowed but may require a permit, depending on what you propose. Self-contained low-voltage systems, such as solar or battery-powered lights, are a good choice.
- Lighting is limited to the structural elements of the parklet and cannot be attached to public trees, light poles, or other City-owned infrastructure.
- Lighting shall be placed in a manner and brightness level to avoid distraction to drivers.
- They are at least 7.5’ feet high to allow vertical clearance for pedestrians.
- Do not include any lighting that is blinding to passing traffic.
- Due to Healdsburg’s historic downtown buildings, some sites will require more creative solutions so as not to damage structures.
- Please include a lighting plan with your parklet paperwork. It must include specific locations of anchor points, type of wall anchors proposed for installation, size of lateral cabling, and where the electricity is being drawn from (interior of building or exterior of building).
- Additional detailing will be required for the proposed construction of the overhead lighting support system to show how lateral bracing is provided.
- All lighting must meet electrical code and energy code requirements. All lighting types, lighting controls and the routing of the electrical should be clearly indicated on an electrical plan.
- All lighting and cords must be UL listed for outdoor use and warm in color (no bright LEDs). All outdoor electrical must be cord and plug connected using a Ground Fault Circuit Interrupter (GFI) electrical receptacle.
- Cords or wiring at ground level must be covered or installed to prevent trip hazards. Overhead wiring may be permitted under certain situations with approval.
- If in the opinion of the City that the lights are a distraction, applicant shall modify as necessary at their own expense.
- At no time should any business tap into City-owned power or any other public utility.

MAINTENANCE & LANDSCAPING

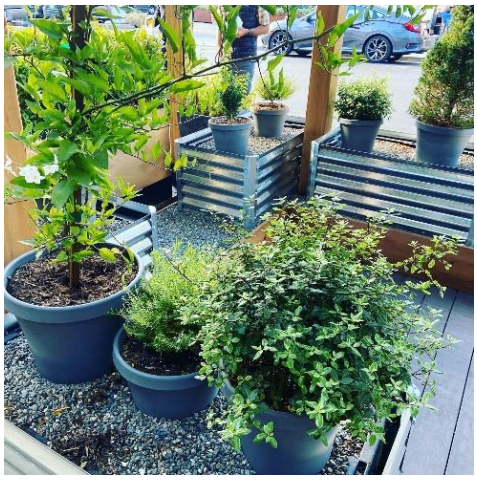

Being approved for a parklet is a great privilege and responsibility. Parklet owners are responsible for ensuring their parklet is kept in like-new condition including:

- Exposed wood is stained, sealed, or otherwise treated for ongoing outdoor use.
- Measures taken to prevent weathering or discoloration in wood or sidewalls.
- Regularly clean parklet and the surrounding areas that accumulate trash and leaves.
- Regularly inspecting decking, hinges, sidewalls, ramps, connections points, railings, etc. to comply to guidelines.
- Ensure parklet lighting such as bistro lights are replaced when burnt-out.

Due to the placement of parklets and closed streets, street-sweepers are unable to access the area. The garbage will attract vermin, and the leaves will cause slipping hazards, particularly when wet. Parklet owners are responsible for cleaning and maintaining all interior and exterior areas surrounding your parklet where street sweepers cannot reach, including your neighbor's frontage. To assure contaminants do not enter our waterways, no sweeping into any drainage or planter, debris must be properly disposed in an appropriate receptacle.

Additionally, please ensure that you are doing your part in beautifying your space and upkeeping any added foliage in planter boxes as this adds to the charm of our parklets in Healdsburg. Parklets are required to have some type of landscaping incorporated into their parklet design. Landscape plantings help soften the space and can serve as a pleasant buffer along the street-facing edge. Landscape elements may be incorporated as planter boxes, hanging planters, raised beds, or similar features. Drought-tolerant and native plants are good choices for ease of maintenance. Edible plants and plants with fragrance, and seasonal interest are also recommended.

SEATING

Parklets that incorporate seating can be integrated in a variety of creative ways. These seats can be a part of the structure, planters, or creative features within the parklet. Seating and tables can also be movable as well. This seating can be removed and stored at the end of the day or locked with cables to the parklet structure.

Seating must comply with ADA requirements.

SIDEWALLS: THE 50% RULE

By adhering to The 50% Rule at all times, parklet owners will meet several sightline, air flow, and parklet design requirements. The bulleted items below define The 50% Rule:

- Use of sidewalls are permitted **only when…**
  - **The parklet is in active use**
  - **During times of direct sunlight, rain or heavy wind**
- The combined sidewall area (all 4 sides) shall not have less than 50% of clear unobstructed openings around your parklet.
- You can include columns and other vertical elements into your parklet design.
- Continuous opaque walls between 42”-90” that block views into the parklet from the surrounding streetscape are prohibited.
- The parklet should have a notable, defined edge along the side of the parklet facing the roadway and adjacent parking stalls. Depending on the context, the edge should be between 30” and 42” in height.
- Temporary vertical obstructions, such as mesh screens, between 42” and 90” from the pavement shall be considered a **“closed sidewall”.**
- Vertical obstructions 42” or less in height shall be considered “**partial obstructions**” and shall be allowed for the purposes of determining **“sufficient outside air movement”**.
- A minimum clear **“opening”** height of not less than 48”, shall be provided above any partial obstructions to provide **“sufficient outside air movement”**.
- Variations from these guidelines may be approved on a case-by-case basis when the intent of the State and County guidelines are met and the variations are approved by the Department of Public Health and the fire code official. (An example of a variation might include fans or other devices that increase sufficient outside air movement to a space that might not otherwise meet all of the criteria mentioned above.)
- All temporary sidewall material/fabric, placement, and attachment method must be pre-approved as part of your Parklet Permit.

Closed sidewall
(Non-permanent. Only permitted during times of direct sunlight, heavy wind, or rain. All temporary sidewalls and sidewall material must be pre-approved

SIGNAGE

Parklets may not be used to hang banners, promotional material, or any other type of signage without prior approval from the City. A professional design proof may be required.

At no time should any business attach, affix, or secure, any signage to any power pole, tree, streetlamp, or other City-owned piece of infrastructure without prior approval. Signs should be modest in size and be in character with the materials, colors, and details of the parklet and associated business. Signs shall not impact sight lines and shall not obstruct the public right-of-way.

Parklets using parking stalls or otherwise blocking their address, must provide their numerical address on the street facing side of their parklet so that it is easily viewable from the roadway. A self-reflective address sign on the parklet with individual numbers that are at minimum 4” in height.

CONSTRUCTION

No permits will be approved on City streets without the installation of an approved deck. The parklet frame should be a freestanding structural foundation that rests on the street surface or curb. No features or structural components may be permanently attached to the street, curb, or adjacent planting strip. Businesses cannot leave materials within the public right of way outside your parklet, including during construction. At no time should any business attach, affix, or secure, any sign, private equipment to any power pole, tree, streetlamp, or other City-owned piece of infrastructure. Parklets must be freestanding and no attachment to any existing building structure or piece of infrastructure (private or public) is permitted without approval. All parklets must have a continuous boundary defining special parklet area.

Upon receiving your Parklet Permit, construction must be completed in a timely manner and not continue more than 3-weeks from your start date. After work has started, continual progress on your parklet must be made to comply with the conditions of your permit. Any construction lasting more than 3-weeks will require the installment of construction fencing at the permit holder’s coordination and risk possible revocation of permit. Additionally, drilling into the sidewalk or pavement is not allowed. When your permit expires, businesses will need to repair any damage to public property. The City will require an additional encroachment permit to correct any damage.

CURB INTERFACE

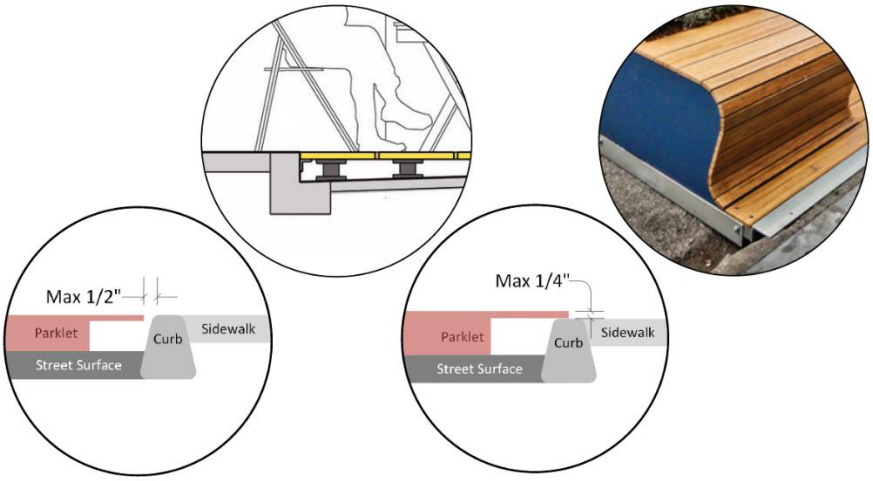

- Parklet design shall allow for stormwater flow and drainage along the curb.
- The top of the decking shall be flush with the curb (no more than 1/2" horizontal gap), level with the adjacent sidewalk (no more than 1/4" vertical deviation) and must be accessible at several locations by pedestrians.
- The parklet must have a seamless connection to the existing curb to meet ADA requirements. In certain situations, a ramp may be required to meet ADA requirements.

PUBLIC UTILITY

A parklet shall not block or encumber the working space around storm water drainage, fire hydrants, transit stops, driveways, manholes, or public utility valves/covers. At no time should any business tap into City-owned power, water, or any other public utility.

ROAD BARRIERS

Vehicle deterrents such as heavy planters, filled wine barrels, or other heavy objects shall be installed within the parking space adjacent to the traffic lane no more than 6' apart along the street side perimeter of the parklets. Additional vehicle deterrents shall be installed on the edges of the parklet. Vehicle deterrents such as barricades, planters, wine barrels, or other objects **MUST** be filled with water, soil, sand, gravel, or other heavy material and be installed within the parking space adjacent to the traffic lane or adjacent parking sides. All vehicle deterrents shall be located entirely within the approved parking space(s), and design and placement must be approved by City staff. Do not push out road barriers into the roadway to gain additional space.

Reflective tape or markers are required at the corners of the parklet and, depending on location, along the length of the parklet to alert drivers, cyclists, and others. In low light conditions or rainy days, drivers unfamiliar with the parklets need a clear warning of these unexpected objects in the parking area.

SIGHT LINE

- The parklet design must ensure visibility to passing traffic and pedestrians and not create a visual barrier.
- The parklet shall maintain a visual connection to the street. Continuous opaque walls higher than 42” that block views into the parklet from the surrounding streetscape are prohibited.
- A minimum overhead clearance of 90” (preferably 96”) must be provided for any parklet that includes a canopy, umbrella, or similar element, to avoid creating a visual barrier and to provide adequate clearance for people.
- The parklet should have a notable, defined edge along the side of the parklet facing the roadway and adjacent parking stalls. Depending on the context, the edge should be between 30” and 42” in height on the street side.
- The parklet shall not encroach on the travel way.
- Traffic deterrents must be connected to create a perimeter that deters individuals from entering the traffic lane from the parklet. This can be accomplished via a railing, planter, pony fence, roping, or other similar apparatus. A continuous barrier is also required for ABC purposes.
- Generally, parklets must be located at least one parking stall away from a street corner. Applicants requesting a parklet located on a corner will undergo a thorough review and sight line evaluation, based on specific location and intended use, to determine if the presence of the parklet at a specified location will cause a safety hazard.
- Parklet shall not create an unsafe condition by limiting necessary line of sight from driver to signage, traffic, or pedestrians.

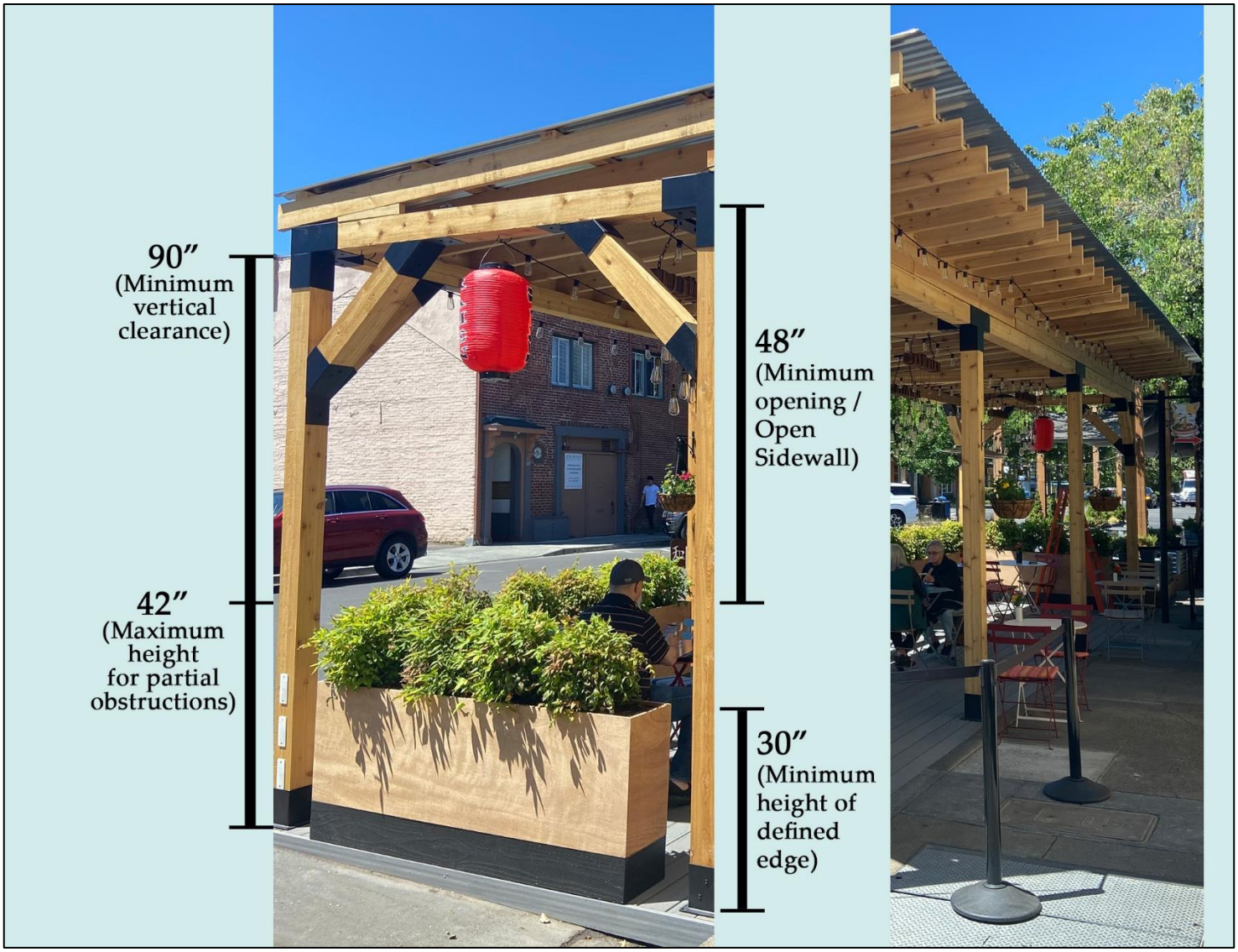

EMERGENCIES & CITY REPAIR

As determined by the City, a business shall remove a parklet installation or portion of a parklet at its own cost for:

- **Public utility maintenance, upgrades, repair, or inspection purposes**
- **Street maintenance, upgrades, repair, or inspection purposes**
- **Access below ground, street level, or above ground utilities, trees, and other City infrastructure**
- **Storms, floods, high wind advisories, and other weather-related events**
- **Upgrade, maintenance, or regular inspection of public utilities**
- **Access to fire hydrants, manholes, valves/covers, drainage, and other utility or utilities**
- **Securing, altering, relocating, and/or items contained within for safety reasons**
- **Other purposes as determined by the City or as directed by the City Manager**

Staff will provide parklet owners 60-day notice of any infrastructure replacement or upgrades occurring that would require a parklet to be moved or dismantled. In the case of emergency repairs or weather events, staff will make effort to provide parklet owners with as much advance notice as possible, however, in an immediate emergency this may not be possible.

In an emergency, the City reserves the right to dismantle or remove a section or sections of a parklet in whatever manner it chooses to address the emergency and assumes no responsibility for returning the parklet to its original condition.

Due to the nature of the emergency, repair, maintenance, inspection, or other essential purpose that requires removal, displacement, destruction or disruption of a permitted parklet, an exact timeline may not be immediately known and could exceed days, weeks, or months. See *Appendix D* for Healdsburg Flood Hazard Zones.

GENERAL PERMIT PROCESS

STEP 1: Applicant submits permit application via e-mail to:

Mitchell Wilson, Engineering Technician
mwilson@healdsburg.gov
707.431.3346

STEP 2: Permit Coordinator collects all application materials and provides initial review of application.

- Completed application with required signatures
- Detailed Map / Layout
- Initialed and signed Parklet Permit - Agreement & Guidelines
- Proof of Liability Insurance with Endorsement
- Proof of ABC license to extend alcohol service to parklet (if serving alcohol)
- Any supplemental materials, photos, maps, layouts, or permits

STEP 3: Permit Coordinator routes completed application to City staff for review/approval, as needed.

STEP 3a: The City may request a virtual or on-site meeting with the applicant to review request.

STEP 4: Permit Coordinator assembles all conditions and requirements into a permit packet for applicant to sign.

STEP 5: Permit Coordinator signs and issues Parklet Permit.

IMPORTANT:

Any business wishing to be permitted for a parklet must apply for a Parklet Permit and comply with these updated guidelines regardless of previous permit status.

ASSOCIATED FEES & COSTS

Parklet Fees:

- Administrative Fee: $2,400 annually per parklet
- Annual Rent: $1.50 per square foot rent for private use of the public right-of-way occupied by the parklet, including street, sidewalk, or other public right-of-way. Official parklet size will be determined by the City based on approved layout. The chart below outlines sample fees based on various parklet sizes; each parklet will have its own unique size based on its individual layout:

SAMPLE PARKLET SIZE	ANNUAL RENT	ADMINISTRATIVE FEE - ANNUAL	TOTAL ANNUAL FEE
100 sq. ft.	100 sq. ft. x $1.50 x 12 months	$2,400	$4,200
352 sq. ft.	352 sq. ft. x $1.50 x 12 months	$2,400	$8,736
678 sq. ft.	678 sq. ft. x $1.50 x 12 months	$2,400	$14,604

- The Planning and Building Department charges a $170/per hour fee to applicants for the time spent reviewing professional parklet drawings along with the inspection of your construction for all approved building permits. Applicants that choose to build a more elaborate construction that includes any sort of construction overhead will require a building permit.
- Additional fees may apply depending on parklet location and use as listed in the Master Fee Schedule.
- Fees are subject to increase.
- Prorating is available for permits issued after January 1 of a given year.

Other potential fees: (Not collected by the City of Healdsburg, amounts may change)

- CUPA certification (training required to handle propane under outdoor canopies; roughly $400 annually)
- California Department of Alcohol and Beverage Control – Extension of existing alcohol license
- Any professional designs (required for a building permit)
- Additional fees may apply depending on parklet use.

Other costs:

- The business constructing the parklet is fully responsible for all construction and setup costs, operations and maintenance, full liability release and indemnification, and provision of insurance.
- Any damage, repair, replacement, or preventative maintenance.
- The business shall remove a parklet, or portion of a parklet, at its own cost, if necessary for public utility or street maintenance/repair purposes, as determined by the City. This may include full removal of the parklet installation to access below ground, street level, or above ground utilities, trees, and other City infrastructure.
- The business shall be responsible for repairing any damage caused to the street/curb/gutter/sidewalk as a result of the parklet, once the parklet is removed.

NEIGHBOR NOTIFICATION AND COMPLAINTS

All permit applicants MUST notify all adjacent businesses and provide details of their parklet plan prior to submitting their application. Any immediately adjacent business to a permitted parklet has the right to revoke their support at any time. A neighboring business that has any concerns or issues is encouraged to resolve the matter independently and diplomatically with the permit holder. If a resolution cannot be found, the adjacent business may contact the permit coordinator in writing to file an official grievance for determination and/or direction on the matter. Non-adjacent businesses may also provide a complaint in writing which will be include in the permit holder's file and re-reviewed upon renewal. The permit coordinator will determine any applicable action based on a written complaint.

MAP & LAYOUT REQUIREMENTS

In your permit application, you will be asked to include a ***detailed*** drawing / visual representation of the area in which your proposed outdoor activities will take place. To assist us providing a thorough review of your map / layout you will be asked make note of the following:

Boundaries & Equipment:

- Clearly define the boundaries of your proposed footprint and identify the names of any neighboring businesses
- Your **ENTIRE** parklet, including wine barrels, planters, and barricades, must fit within the parking area (painted white tic marks must be visible or as approved in your permit).
- Label street names of any adjacent streets
- Include all improvements, structures, equipment, and/or materials (i.e., tables, dividers, barriers, etc.)
- Identify all permanent public fixtures within your proposed footprint (i.e., sidewalks, trees, fire hydrants, benches, etc.)
- Indicate 48" path of ADA compliant travel
- Details of construction of platform if used to create flat surface
- Details of hand railing if a drop off is created by platform
- Details at connection point to curb or note to be created "flush with curb"
- Details of any ramp or other device to allow wheelchair access
- Vertical clearance of 7' minimum required from walking surface (i.e., if patio umbrellas are used)
- Vertical clearance of 7.5' minimum required from walking surface (i.e., if canopy is installed)
- Details on use of any gaps between parklet and adjacent parking (i.e., bike parking, planters, etc.); gaps over 4' may require additional road barrier protection provided by the parklet applicant.
- Show continuous boundary defining parklet area.

See *Appendix B* for helpful information on site plans. Professional drawings are required for all Building Permits.

INSURANCE REQUIREMENTS

If Permittee's proposed activities encroach into public right-of-way and/or a public easement, Permittee shall procure and maintain for the duration of this Agreement, and furnish proof of along with this Agreement, insurance against claims for injuries to persons or damages to property which may arise from or in connection with this Agreement, as set forth in this section. The cost of such insurance shall be borne by Permittee. Permittee's whose activities do not encroach into public right-of-way and/or a public easement, shall not be required to obtain said insurance.

Minimum Scope of Insurance:
Permittee shall obtain and all times during duration of this Agreement maintain coverage at least as broad as:

- Insurance Services Office Commercial General Liability coverage (occurrence form CG 0001).
- Workers' Compensation insurance as required by the State of California and Employer's Liability insurance (for Permittees with employees).
- Property insurance against all risks of loss to any tenant improvements or betterments.

Permittee shall maintain limits no less than:
General Liability: $2,000,000 per occurrence for bodily injury, personal injury and property damage. If Commercial General Liability Insurance or other form with a general aggregate limit is used, either the general aggregate limit shall apply separately to this project/location or the general aggregate limit shall be twice the required occurrence limit.

Employer's Liability: **$2,000,000** per accident for bodily injury or disease.
Property Insurance: Full replacement cost with no coinsurance penalty provision.

Deductibles and Self-Insured Retentions:
Any deductibles or self-insured retentions must be declared to and approved by the City. At the option of the City, either: the insurer shall reduce or eliminate such deductibles or self-insured retentions as respects the City, its officers, officials, employees and volunteers; or the Permittee shall provide a financial guarantee satisfactory to the City guaranteeing payment of losses and related investigations, claim administration and defense expenses.

Other Insurance Provisions:

- The general liability policy is to contain, or be endorsed to contain, the following provisions:
- The City, its officers, officials, employees and volunteers are to be covered as insureds with respect to liability arising out of ownership, maintenance or use of the premises/property owned by or leased to the Permittee.
- The Permittee's insurance coverage shall be primary insurance as respects the City, its officers, officials, employees and volunteers. Any insurance or self-insurance maintained by the City, its officers, officials, employees or volunteers shall be excess of the Permittee's insurance and shall not contribute with it.
- Each insurance policy required by this clause shall be endorsed to state that coverage shall not be canceled, except after thirty (30) days' prior written notice by certified mail, return receipt requested, has been given to the City.

Acceptability of Insurers:
Insurance is to be placed with insurers with a current A.M. Best's rating of no less than A:VII unless prior approval is received from the City Attorney.

INSURANCE CHECKLIST

Below you will find a helpful Liability Insurance & Endorsement Checklist for providing us a Certificate of Insurance AND Endorsement that meet our requirements:

Certificate of Insurance (COI):

- ❑ Correct name and address of permit applicant is listed on the COI (must match the applicant/business name on the Parklet Permit Application).
- ❑ Limits need to be $2,000,000.00 or greater.
- ❑ "The City of Healdsburg, it's officers, officials, employees, and volunteers'" need to be listed.
- ❑ Proof of Worker's Compensation. The application says that you need to provide proof of Workers' Comp Insurance as required by the State of California and Employer's Liability Insurance. When we refer to proof we are stating that your need to show us that your have Workers Comp but that your don't have to provide the Workers' Comp Waiver of Subrogation, which we normally require.

Additionally Insured General Liability Endorsement:

- ❑ "The City of Healdsburg, it's officers, officials, employees, and volunteers'" need to be listed.
- ❑ Additionally insured or 'Per Written Contract' needs to be listed.
- ❑ Contains Primary and Non-contributory language.
- ❑ The GL Policy number added to the endorsements or the form numbers added to the certificate page in the description. Something that connects all these documents together.

Please provide the above requirements and checklist to your insurer and confirm that they have provided all information contained in the checklist before submitting your insurance documents. Providing insurance documents that do not meet the City's minimum requirements may delay your permit approval. It is the responsibility of the permit holder to ensure that the City has your most current insurance information on file.

ADDITIONAL PERMITS & REQUIREMENTS

The City shall only enter into a parklet agreement that authorizes activities which are consistent with City, State and County guidelines. Nothing in this permit shall authorize a particular business to operate outside unless that business is authorized to operate with approval of the City of Healdsburg. All businesses must be in full compliance with all City, State, and County requirements.

Nothing relieves a business from the requirement to:

- Obtain a Building Permit for outdoor activities if a building permit would otherwise be required, nor does this relieve a business from complying with all provisions of the Building Code, including but not limited to, maximum occupancy requirements. City staff will determine if your parklet construction requires a building permit as part of their review of your permit application.

- Undergo design review for exterior alterations if such design review is required pursuant to any historic property standards.

- Obtain any and all California Department of Public Health (CDPH) permits required for outdoor food service / food safety.

- Obtain an alcohol license extension from California Department of Alcohol and Beverage Control. Since the City of Healdsburg does not administer this permit, if you hold a Temporary ABC COVID-19 Catering Permit, your license may not align with the duration of your Parklet Permit. Please ensure you that you have the proper alcohol permit(s) to extend your existing alcohol license into a permitted parklet area. The number to ABC's local office in Santa Rosa is 707-576-2165 if you have any questions.

- Adhere to the laws and regulations set forth in the Americans with Disabilities Act of 1990 (ADA). As the business and parklet owner, you are responsible for understanding and meeting the requirements of the Americans with Disabilities Act (ADA). You must always keep a 48” walkway open for pedestrians, do not allow customers to move chairs or tables that infringe on the public walkway. See Appendix A for additional guidance.

- Obtain all permits and follow all requirements found in the California Building Standards Code and the California Fire Code including electronically reporting and applying for a Hazardous Materials Certified Unified Program Agencies (CUPA) permit if using Liquid Petroleum (LP) Gas (Propane).

Information provided above is not an exhaustive listing of permits and parklet requirements. Permit requirements are subject to change, additional permits may be required, and holders a Parklet Permit must conform to all updated permit requirements, guidelines, laws, and ordinances.

TIMELINE	
Wednesday, August 31, 2022	**Deadline to apply for ongoing Parklet Permit for January 1, 2023, start date:** Due to anticipated number of applications expected under the Ongoing Parklet Program interested applicants should apply by this date. This will allow time for permit review & approval to ensure a smooth transition between permits and/or to prepare for parklet construction. Applications will be accepted at any time, but applications not received by this date are not guaranteed a January 1, 2023, start date.
Sunday, January 1, 2023	**Program launch:** Initial wave of approved Parklet Permits go into effect under these guidelines. Program continues as permits are approved.
October – November 2023	**Renewal Period:** All Parklet Permits evaluated for possible renewal for 2024 and annual fees due.
October – November 2024	**Renewal Period:** All Parklet Permits evaluated for possible renewal for 2025 and annual fees due.
Spring-Summer 2025	**Ongoing Parklet Program Review** The Ongoing Parklet Program will undergo a thorough program review for possible modification or termination as determined by Healdsburg City Council.

IMPORTANT:

- Unless otherwise specified by City staff, businesses who hold a Building Permit for an existing parklet will not be required to re-apply for a Building Permit. However, a Building Permit may be required for any modification to your parklet structure.
- Any modification to permitted parklets requires authorization in advance.
- Permit renewal is not guaranteed.

PARKLET INSPECTION

Once your approved permit is issued, your parklet is subject to regular inspection by City staff without notice. Inspection results will be provided to you along with any notations, corrective measures, and timeline for completing any issues. Timeline for each corrective measure will be contingent on the safety risk posed. Permit holders will need to confirm all corrective measures in writing and provide pictorial evidence if required. To assist parklet owners with ensuring guideline compliance, *Appendix E* offers a helpful Self-Inspection Checklist.

If on subsequent inspections, previously identified issues persist, the permit review team will review the violation and determine appropriate action. **Permits may be terminated, revoked, or amended at any time at the sole discretion of the City Manager.** Please see section on “Violations” for additional information.

ADDITIONAL TERMS & CONDITIONS

Please read and understand the following permit terms & conditions:

- Permittee agrees to accept all responsibility for loss or damage to any person, property, or entity and to indemnify, hold harmless, and defend and release the City of Healdsburg, its agents, and employees from and against any and all liability actions, claims, damages, costs, or expenses which may be asserted by any person, property, or entity, including Permittee, arising out of or in connection with the willful act or negligence of Permittee engaging in the activities associated with this Agreement, whether or not there is concurrent negligence on the part of the City, but excluding liability due to the sole active negligence or sole willful misconduct of the City.
- Permittee hereby grants to the City the right to remove or relocate said improvements and to come upon Permittee's land to effect said removal or relocation if deemed necessary by the City and/or a Utility. Permittee waives any claim or right he/she/it may have for inverse condemnation, damages, or loss of income or business resulting from said removal.
- Permittee shall comply with all applicable local, State, and Federal laws and regulations at all times during the effective period of this agreement, including but not limited to laws regarding the obstruction of vehicular traffic, the Americans with Disabilities Act, and County health laws regarding provision of food services.
- If Permittee's proposed activities encroach into public right-of-way and/or a public easement, Permittee shall procure and maintain for the duration of this Agreement, and furnish proof along, with this Agreement, insurance against claims for injuries to persons or damages to property which may arise from or in connection with this Agreement, as set forth in this section. **It is the responsibility of the permit holder to ensure that valid insurance remains on file with the City.**
- Permittee understands and agrees that this permit confers no vested rights to any ongoing or continued activities, and any and all activities authorized by this Agreement. All improvements, structures and installments approved pursuant to this Agreement shall be removed in their entirety upon expiration of this Agreement.
- This Agreement is non-transferable. Only the permittee with whom this Agreement was entered shall be permitted to engage in the activities authorized herein.
- This instrument contains the entire agreement between the parties relating to the rights herein granted and the obligations herein assumed.

Permit holders must agree to the following:

- I understand that this program is ongoing and will expire in accordance with these guidelines, unless otherwise amended by City Council.
- I understand that my parklets should be functional, safe, welcoming, aesthetically pleasing, and meet all municipal and parklet guideline requirements.
- I will adhere to all Sonoma County Health Services orders and requirements.
- I will adjust my outdoor plan if the City identifies safety, ADA, or logistical issues after this permit is issued.
- I accept all risk related to loss or damage of any outdoor furnishings.
- I will always leave room for ADA access (minimum of 48" unobstructed clearance) and for appropriate pedestrian flow and will be responsible for allowing all ADA requirements.
- I will leave Fire Department connections, fire hydrants, and designated red zones unobstructed.
- I will train staff on the location of the nearest fire extinguisher to the outdoor space.
- I will assure that exits for my business and adjoining businesses remain unobstructed.
- I will not cook outdoors.
- I am not prohibited by any lease or rental agreement from expanding my business outdoors in front of my business.
- I understand the City reserves the right to update, amend, or otherwise change these guidelines at any time.
- I understand that amplified sound is not permitted in any parklet area.
- I understand that parklets must be made assessable during all hours of business operation, if requested by a customer.
- I understand that smoking is prohibited is all parklets.

VIOLATIONS

To operate in an outdoor public area, you must hold a valid Parklet Permit and following all guidelines herein. Any violation of this permit may include termination of specific parklet amenities (lighting, sidewalls, heating devices, etc.) if improperly used, a cease in parklet service/operation until violations are corrected, or revocation of permit and parklet removal depending on the severity, quantity, or ongoing nature of the violation(s). Parklets with reported violations that remain uncorrected are not eligible for annual renewal.

Violation of any local, State, or Federal law shall constitute an imminent threat to the public health and is hereby declared to be a public nuisance and shall be subject to enforcement as such; violations may result in the immediate termination of your Parklet Permit and the cessation of any authorized activities. **Permits may be terminated, revoked, or amended at any time at the sole discretion of the City Manager.**

APPEAL

Any applicant who is denied a Parklet Permit, whose parklet concept does not conform to these guidelines, or whose permit has been revoked for any purpose, may appeal. All appeals must be made to the City Manager within 30-days of notice of denial or revocation. The appellant shall attach a written statement describing the circumstances of the appeal and include any evidence that he/she would like to be reviewed for consideration. A response will be delivered within 30-days to the applicant.

SIGNATURE

THE UNDERSIGNED AGREES THAT THE PROPOSED ACTIVITIES DESCRIBED ABOVE SHALL BE IN ACCORDANCE WITH AND SUBJECT TO THIS AGREEMENT'S TERMS AND CONDITIONS, CITY OF HEALDSBURG RESOLUTION NO. XX-2022 AND ALL OTHER APPLICABLE LOCAL, STATE AND FEDERAL LAWS.

Applicant signature:	**Date:**

APPENDIX A: ADA SEATING REQUIREMENT

Below are a few sections from the Americans with Disabilities Act (ADA) regulations as a helpful resource for providing accessible tables and seating in your parklet.

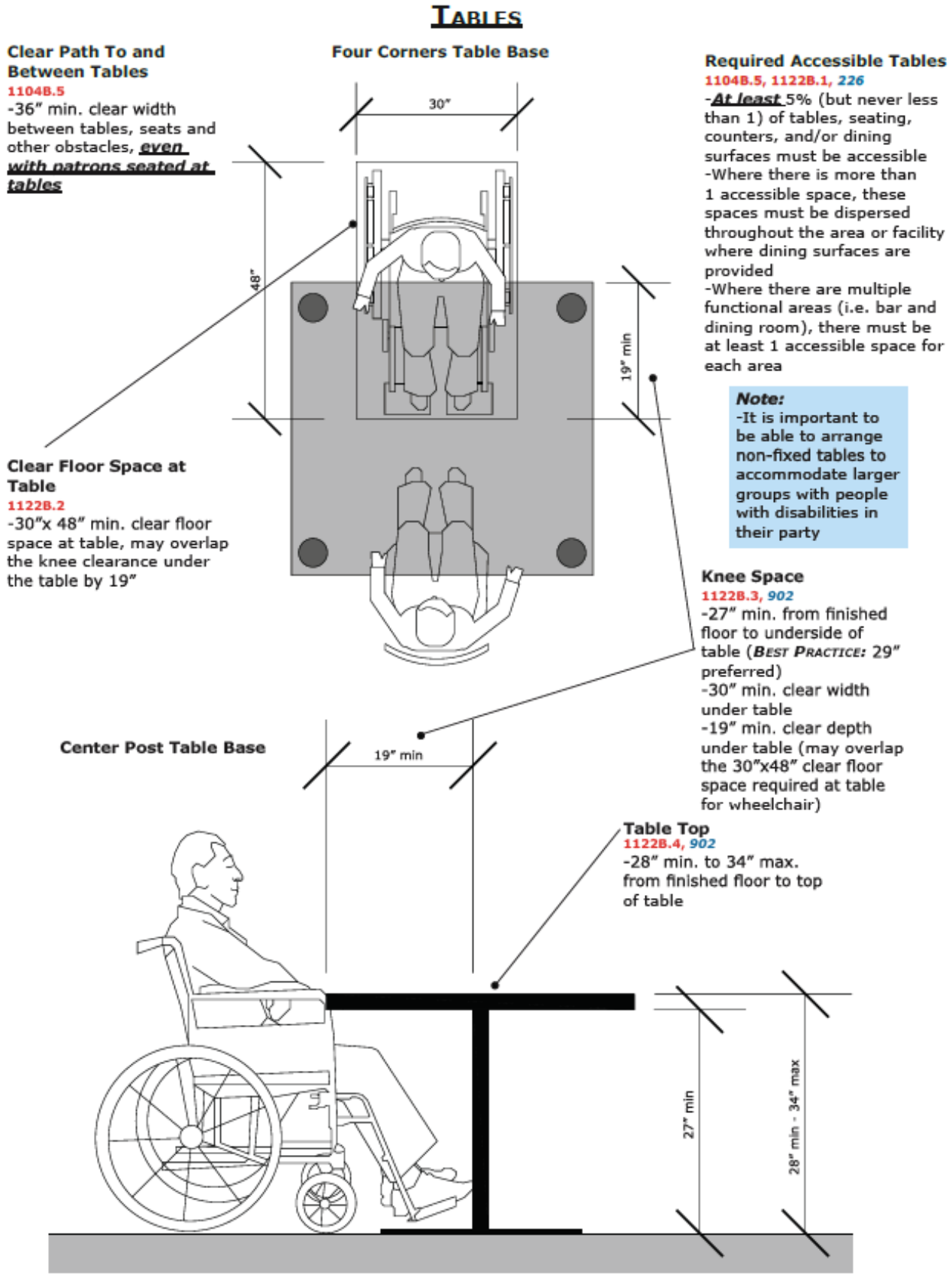

© June 2012 Designing Accessible Communities. All rights reserved.

Banquette Seating

Note:
-It is important to be able to arrange non-fixed tables to accommodate larger groups with people with disabilities in their party

Booth Seating with Center Post Table Base

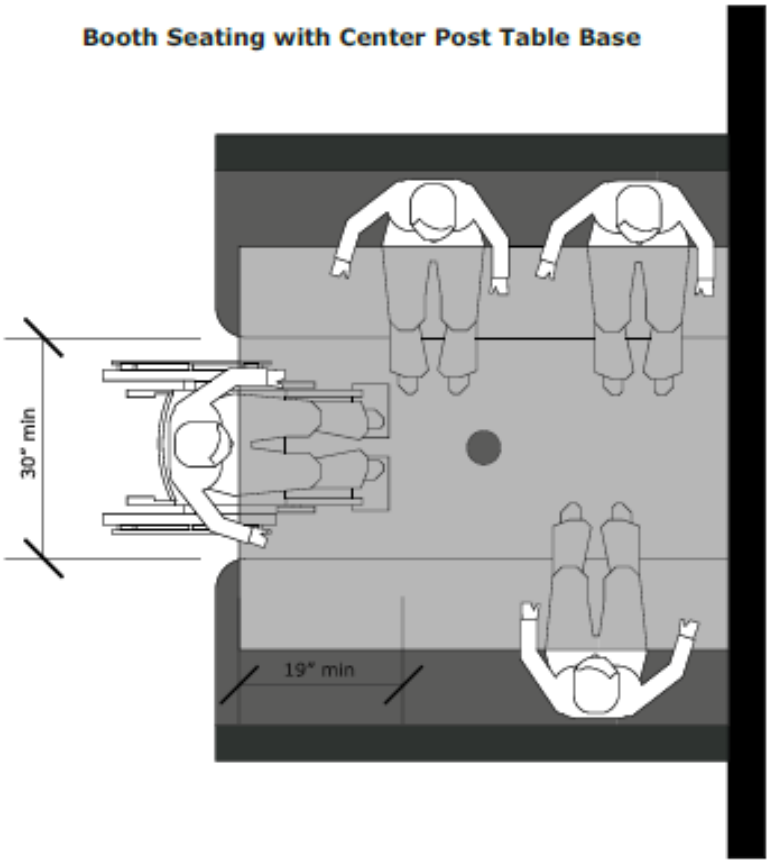

Clear Floor Space at Table
1122B.2
-30"x 48" min. clear floor space at table, may overlap the knee clearance under the table by 19"

Sled (or T) Table Base

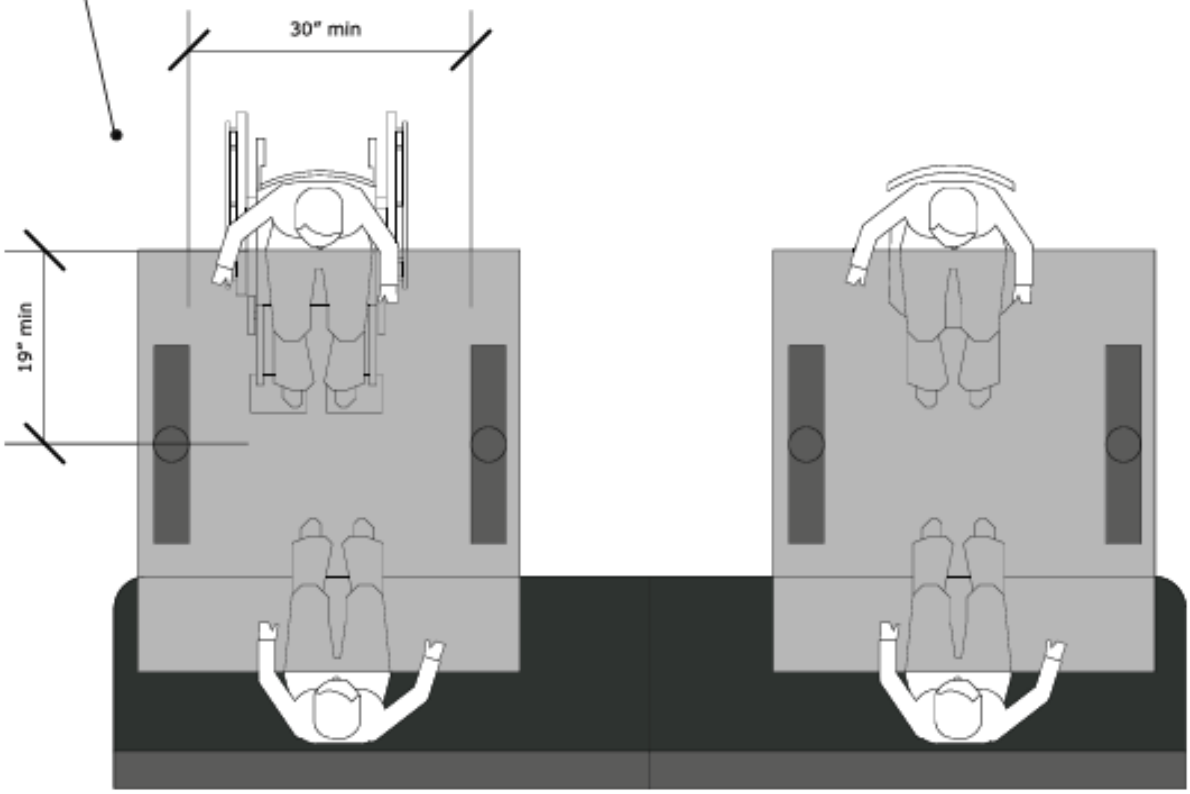

© June 2012 Designing Accessible Communities. All rights reserved.

Table Bases

***Non-Accessible* X Base**

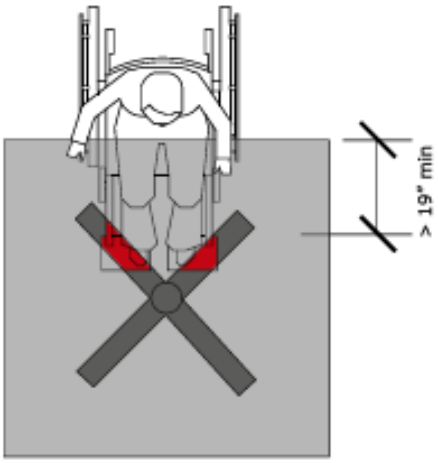

Center Post Table Base

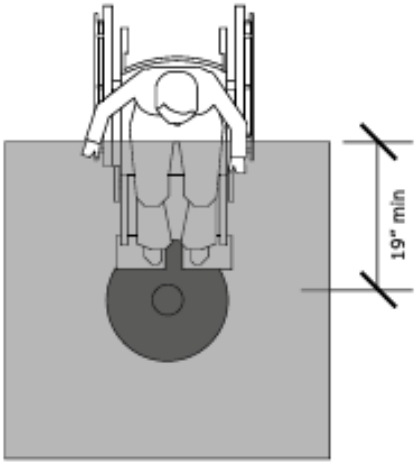

Bolt-Down Center Post Table Base

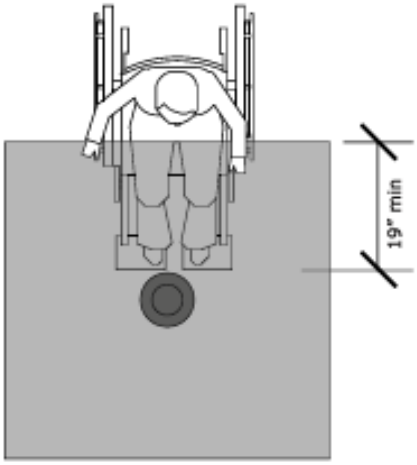

Knee Space
1122B.3, *902*
-27" min. from finished floor to underside of table (***Best Practice:*** 29" preferred)
-30" min. clear width under table
-19" min. clear depth under table (may overlap the 30"x48" clear floor space required at table for wheelchair)

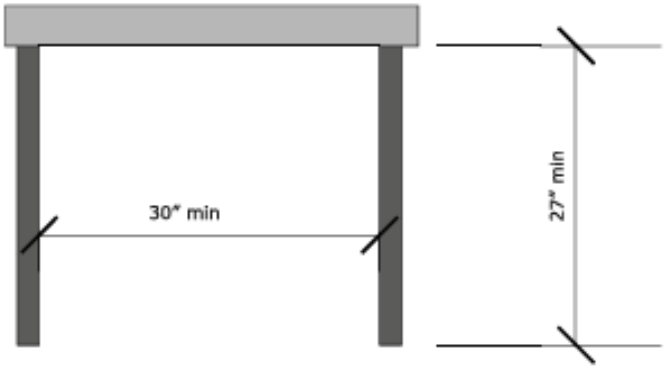

Four Corners Table Base

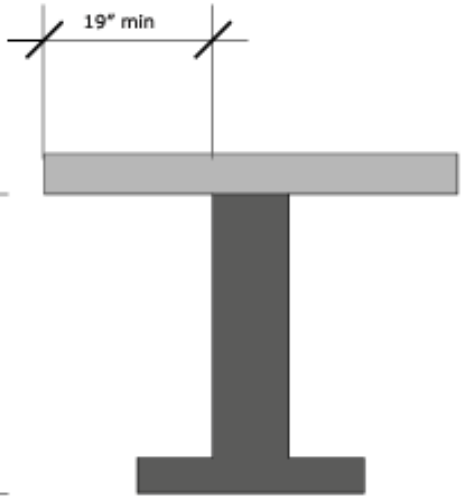

Sled or T Table Base

General/*Best Practice*
1122B.3, *902*
-The following are considered ACCESSIBLE bases:
- -Legs in the 4 corners with at least 30" min. between them
- -Sled or T base on two sides of the table with 30" min. between them
- -Center post with bolt-down base, at least 19" from edge of table
- -Center post with flat base of 1/2" thick max. with 1/4" bevel, if flat base extends into the required 19" clear space from edge of table

-Do NOT use X-shaped table base, as it interferes with the 19" min. clear space from edge of table and may cause wheelchair footrests to become stuck (shown in red above)
-Do NOT use center post with thick or sloped bases that extend into the required 19" min. clear space from the edge of the table, as this will prevent a person using a wheelchair from being able to sit comfortably at the table, or may cause their wheelchair to tip back

© June 2012 Designing Accessible Communities. All rights reserved.

Bar/Counter Seating

Bar/Counter Width
1104B.5.4
-60" min.

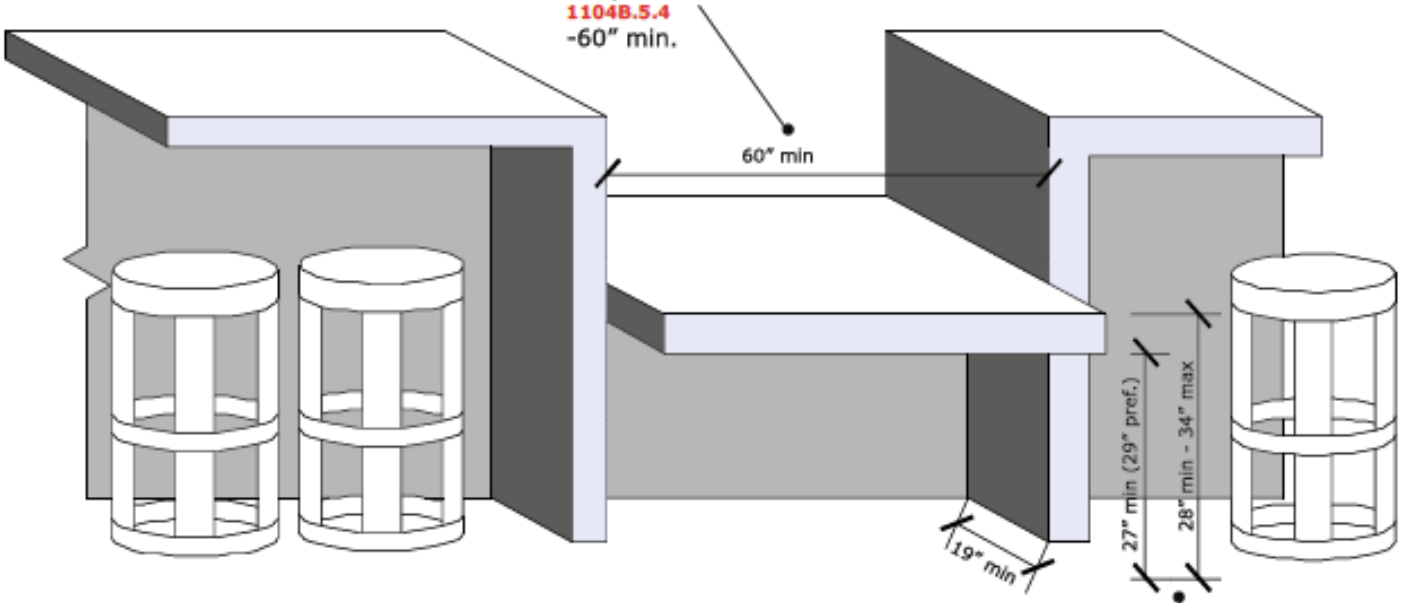

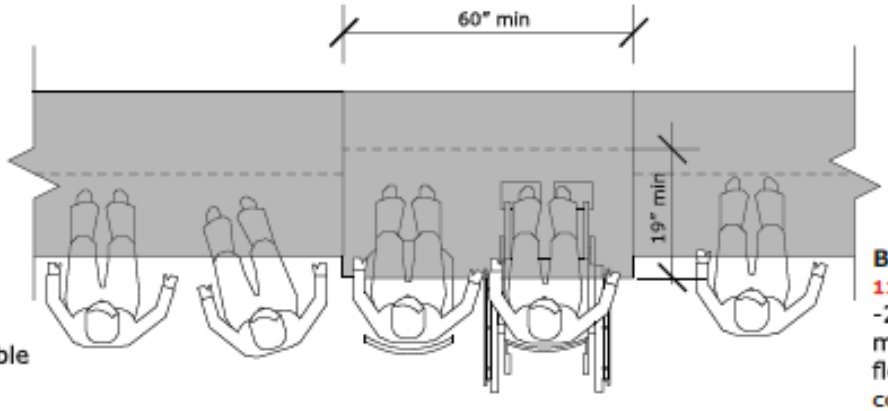

Knee Space
1122B.2, *306.3*
-27" min. from finished floor to underside of table (29" preferred)
-30" min. clear width under table
-19" min. clear depth under table (may overlap the 30"x48" clear floor space required at table for wheelchair)

Bar/Counter Top
1122B.4, *902.4.2*
-28" min. to 34" max. from finished floor to top of bar/ counter
-Must extend full depth of bar/counter
-Do NOT use as service area

Required Accessible Tables
1104B.5, 1122B.1, *226*
-***At least*** 5% (but never less than 1) of tables, seating, counters, and/or dining surfaces must be accessible
-Where there is more than 1 accessible space, these spaces must be dispersed throughout the area or facility where dining surfaces are provided
-Where there are multiple functional areas (i.e. bar and dining room), there must be at least 1 accessible space for each area
-A drop-down hinged counter surface does not count as an accessible space, counter must be same height from customer side to employee side

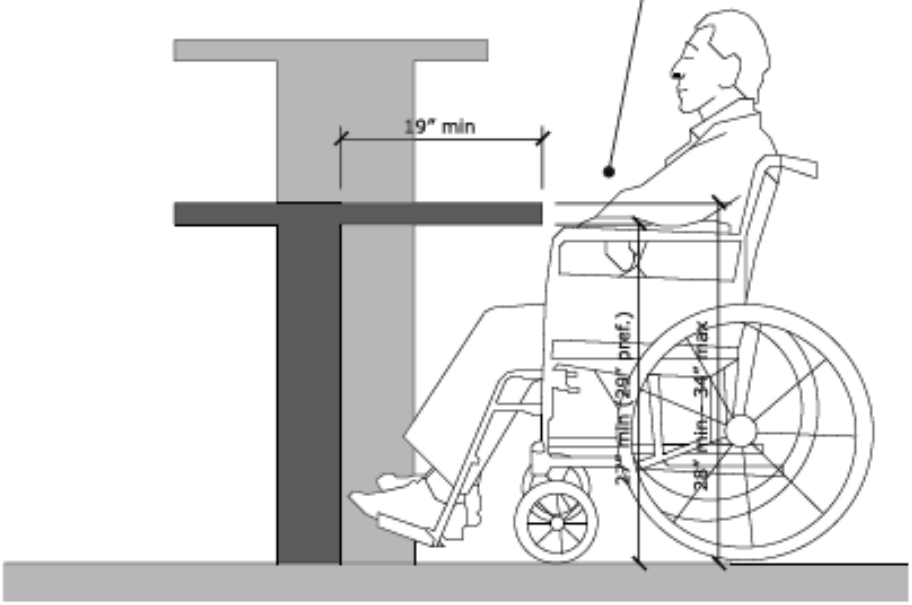

© June 2012 Designing Accessible Communities. All rights reserved.

APPENDIX B: SAMPLE PARKLET SITE PLANS

The following pages contain plans from the City of Sonoma (used by permission) which illustrate many of the guidelines and standards outlined in this document.

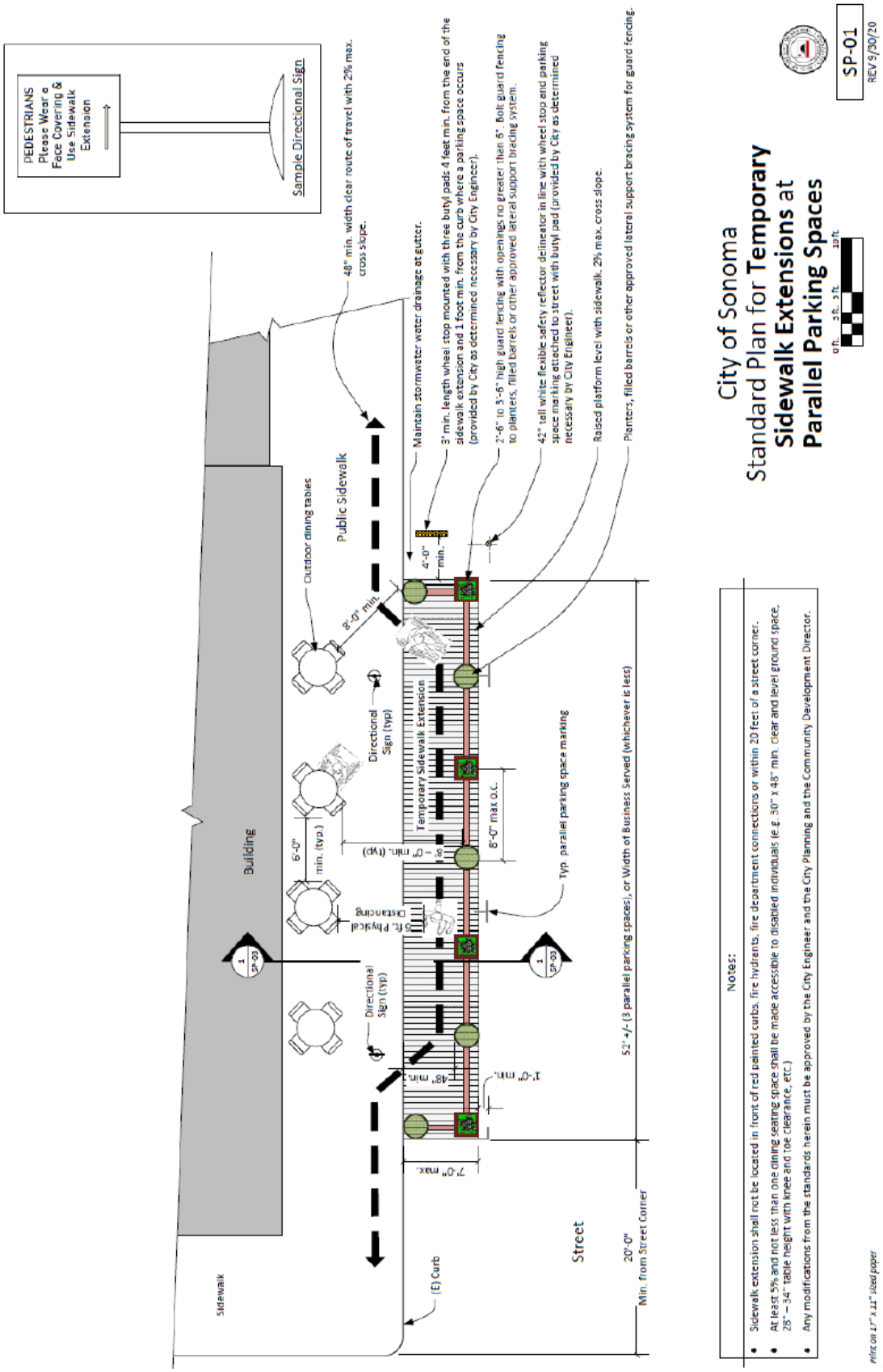

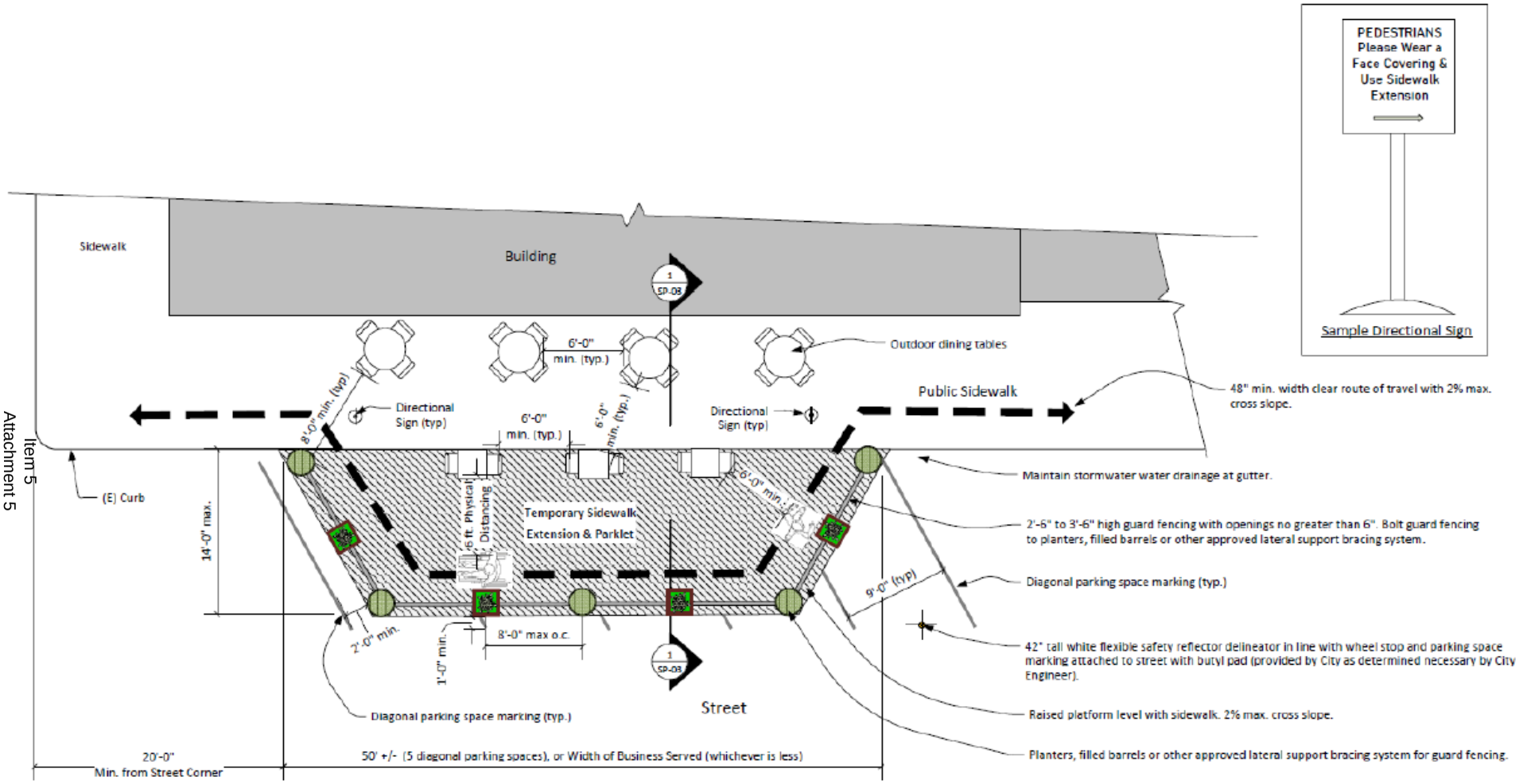

Notes:

- Sidewalk extensions shall not be located in front of red painted curbs, fire hydrants, fire department connections or within 20 feet of a street corner.
- At least 5% and not less than one dining seating space shall be made accessible to disabled individuals (e.g. 30" x 48" min. clear and level ground space, 28" – 34" table height with knee and toe clearance, etc.)
- Any modifications from the standards herein must be approved by the City Engineer and the Community Development Director.

Print on 17" x 11" sized paper

City of Sonoma
Standard Plan for **Temporary Sidewalk Extension/Parklet** at **Diagonal Parking Spaces**

0.0 ft. 3.0 ft 5.0 ft. 10.0 ft.

SP-02

REV 9/30/20

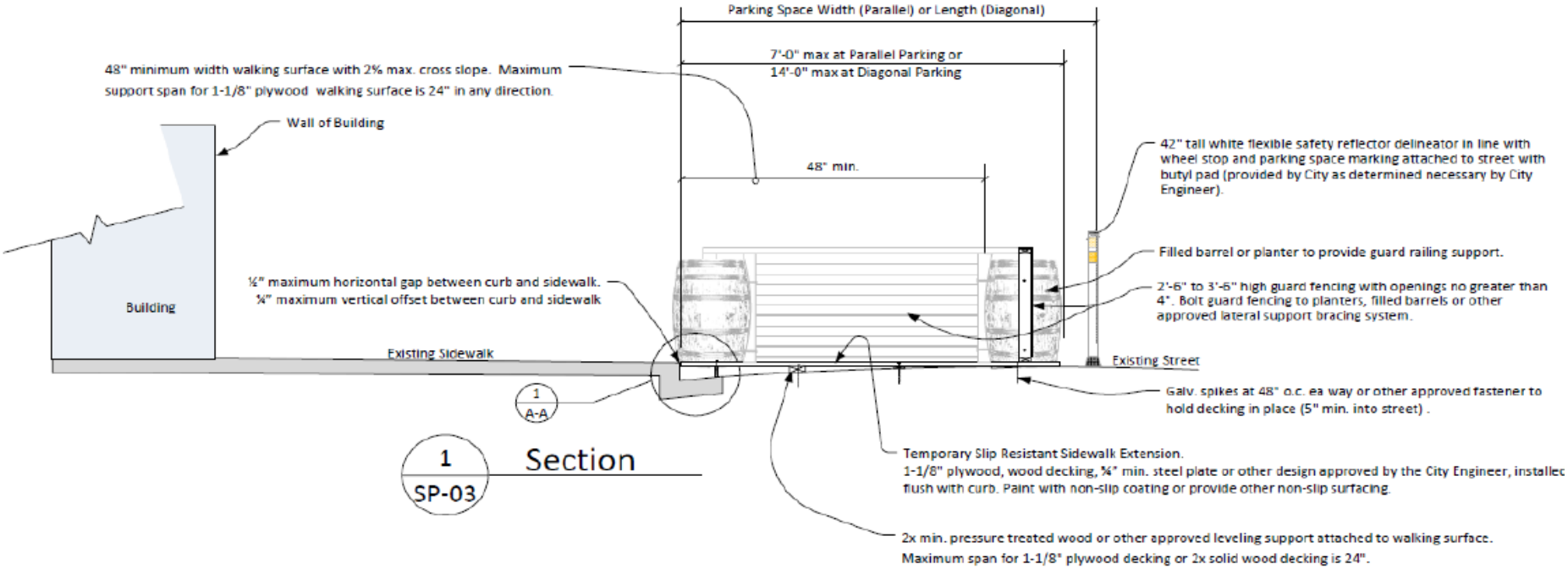

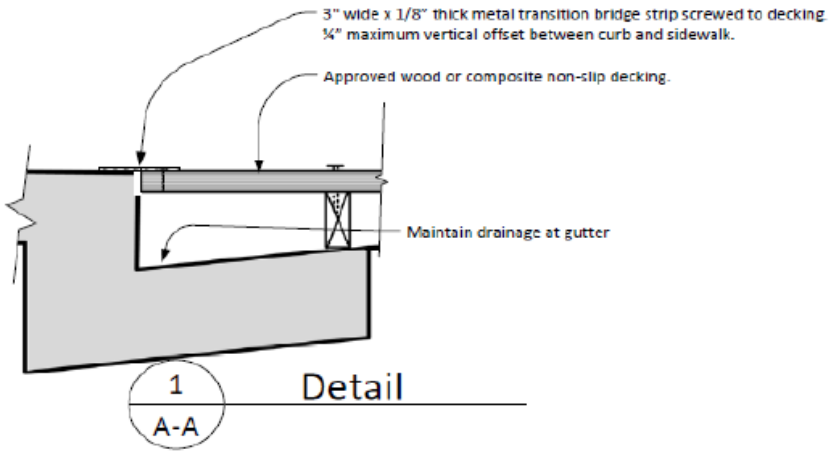

City of Sonoma Standard Plan for **Temporary Sidewalk Extensions**

SP-03

REV 9/30/20

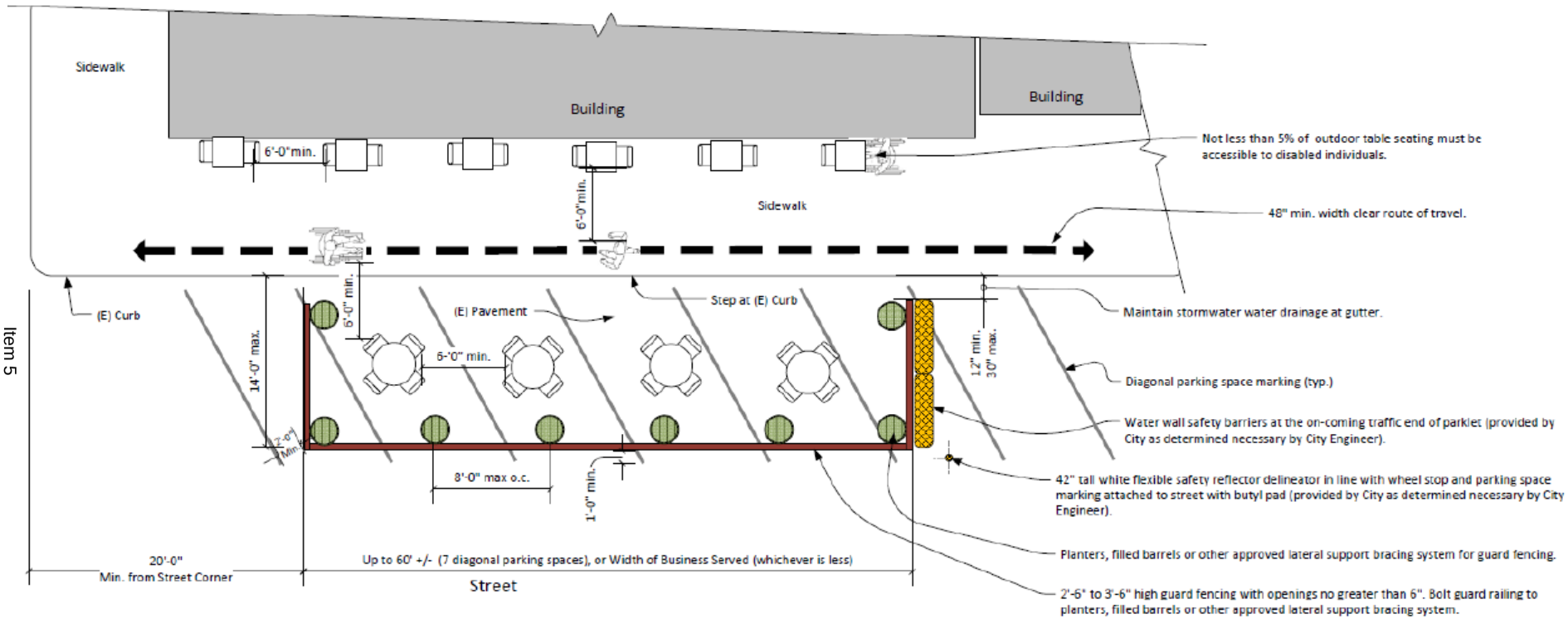

Notes:
• Parklets shall not be located in front of red painted curbs, fire hydrants, fire department connections or within 20 feet of a street corner.
• At least 5% and not less than one dining seating space shall be made accessible to disabled individuals (e.g. 30" x 48" min. clear and level ground space, 28" – 34" table height with knee and toe clearance, etc.)
• Any modifications from the standards herein must be approved by the City Engineer and the City Planning & Community Development Director.

Print on 17" x 11" sized paper

City of Sonoma
Standard Plan for
Street Parklet (no platform) at
Diagonal Parking

0 ft. 3 ft. 5 ft. 10 ft.

SP-04
REV 9/30/20

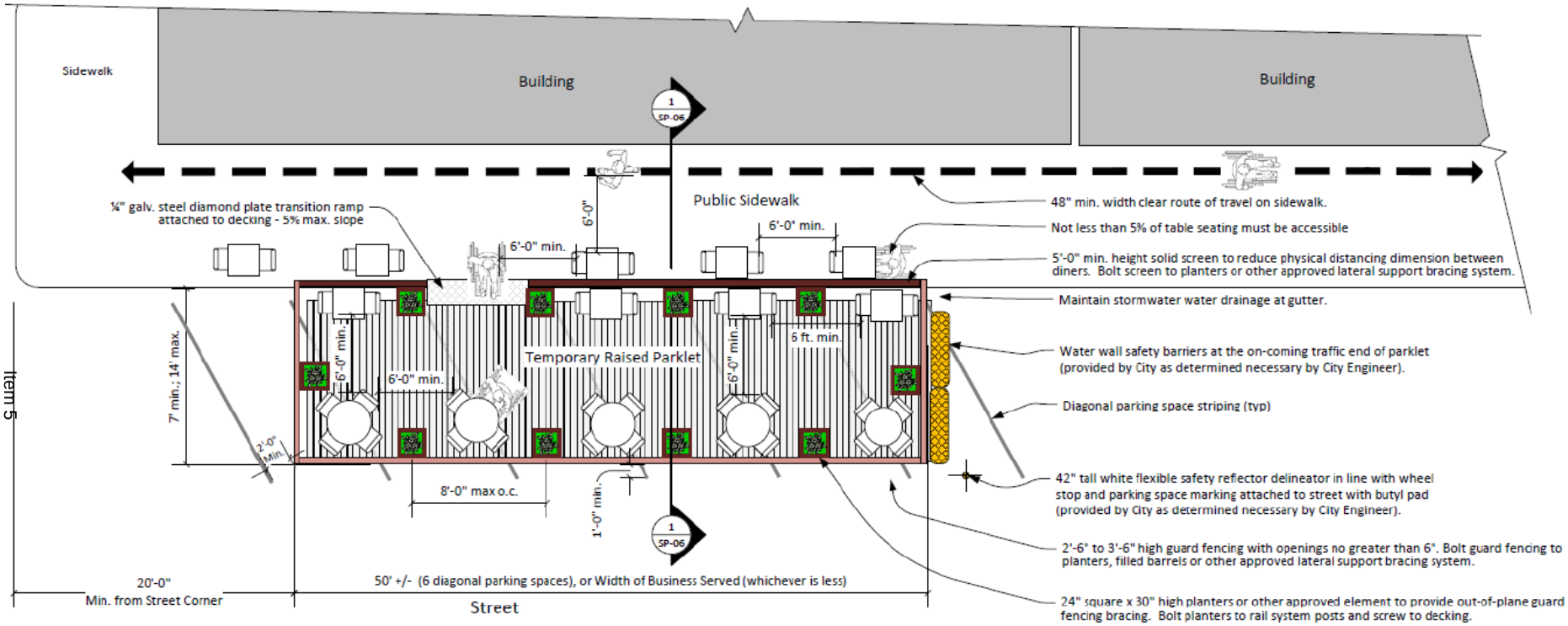

Notes:
• Parklets shall not be located in front of red painted curbs, fire hydrants, fire department connections or within 20 feet of a street corner.
• At least 5% and not less than one dining seating space shall be made accessible to disabled individuals (e.g. 30" x 48" min. clear and level ground space, 28" – 34" table height with knee and toe clearance, etc.)
• Any modifications from the standards herein must be approved by the City Engineer and the City Planning & Community Development Director.

City of Sonoma
Standard Plan for Temporary **Raised Parklet** at **Diagonal Parking Spaces**

0 ft. 3 ft. 5 ft. 10 ft.

SP-05
REV 9/2020

Print on 17" x 11" sized paper

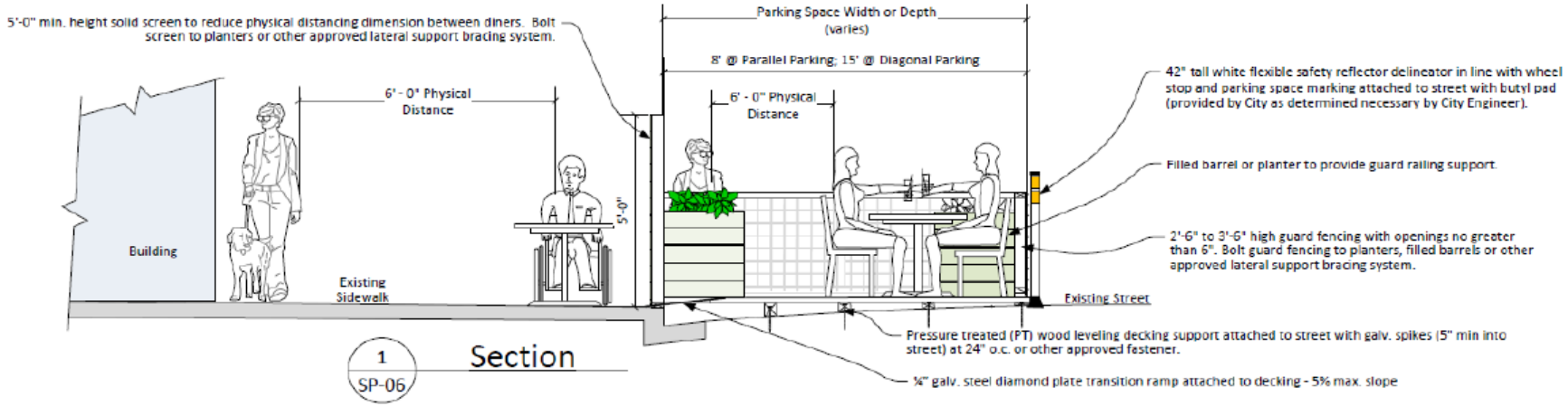

1 SP-06 Section

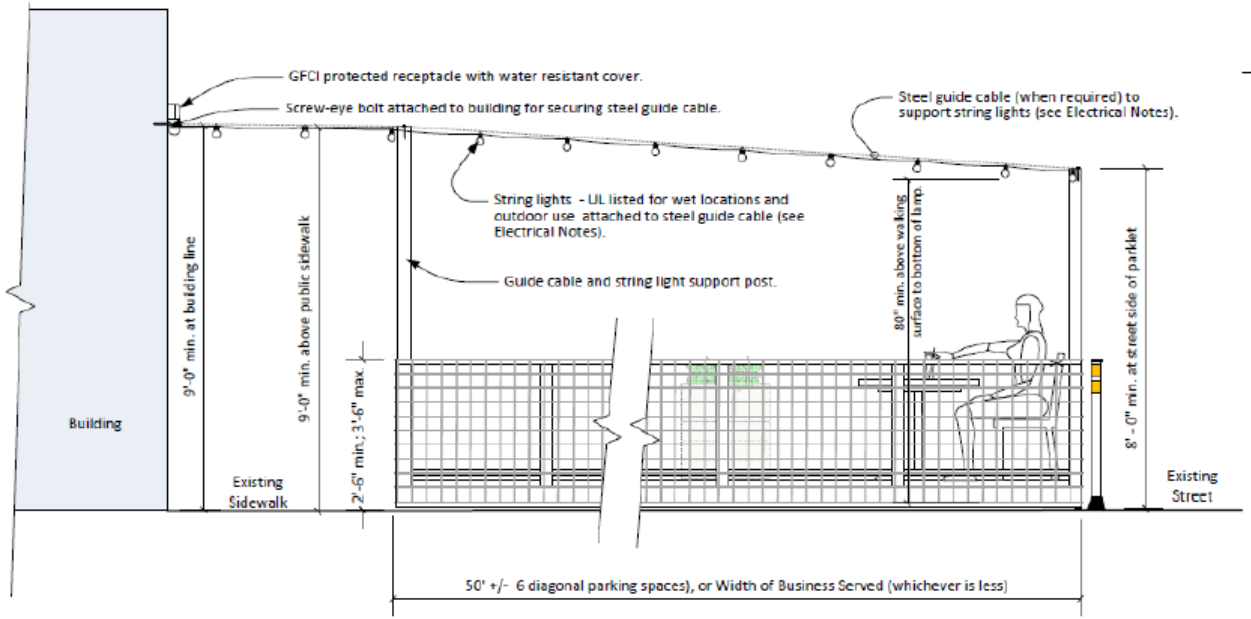

2 SP-06 Street Elevation – Raised Parklet with String Lights

Electrical Notes

- String lights may be installed for a period not to exceed of 90 days. Remove and inspect wire and lamp sockets for degradation due to weather, UV light or other damage prior every 90 days and prior to any re-installation.
- Ground Fault Circuit Interrupter protection (GFCI) is required on the circuits or outlets serving the string lights. A receptacle cover must be in place to prevent the entry of water.
- String lights must comply with UL Standard 588 and be listed for use in outdoor and wet locations.
- String lights must be LED luminaires and controlled by an astronomical time clock or by a photo cell and a time clock.
- String lights must be capable of being turned off by a readily accessible switch or remote control.
- String lights must be installed in accordance with the owner installation manual, and the current California Electric Code.
- String lights must be supported by steel guide cables, with zip ties and eyebolts, or other suitable supporting hardware whenever span distances exceed 10 feet unless longer spans are specified in the manufacturer's installation instructions.
- If an extension cord is used, it must be rated for outdoor use. Use only three wire outdoor extension cords that have three-prong grounding plugs and grounding receptacles that accept the three prong plug.
- Keep combustible material clear of bulbs. Do NOT allow lamps or sockets to come into contact with walls, fabrics, canopies, umbrellas or other combustible materials.
- String lights and extension cords shall not be secured with staples and shall not run through windows, door openings or other openings through walls.

City of Sonoma
Standard Plan for Temporary
Raised Parklets with String Lights

SP-06
REV 9/30/20

Print on 17" x 11" sized paper

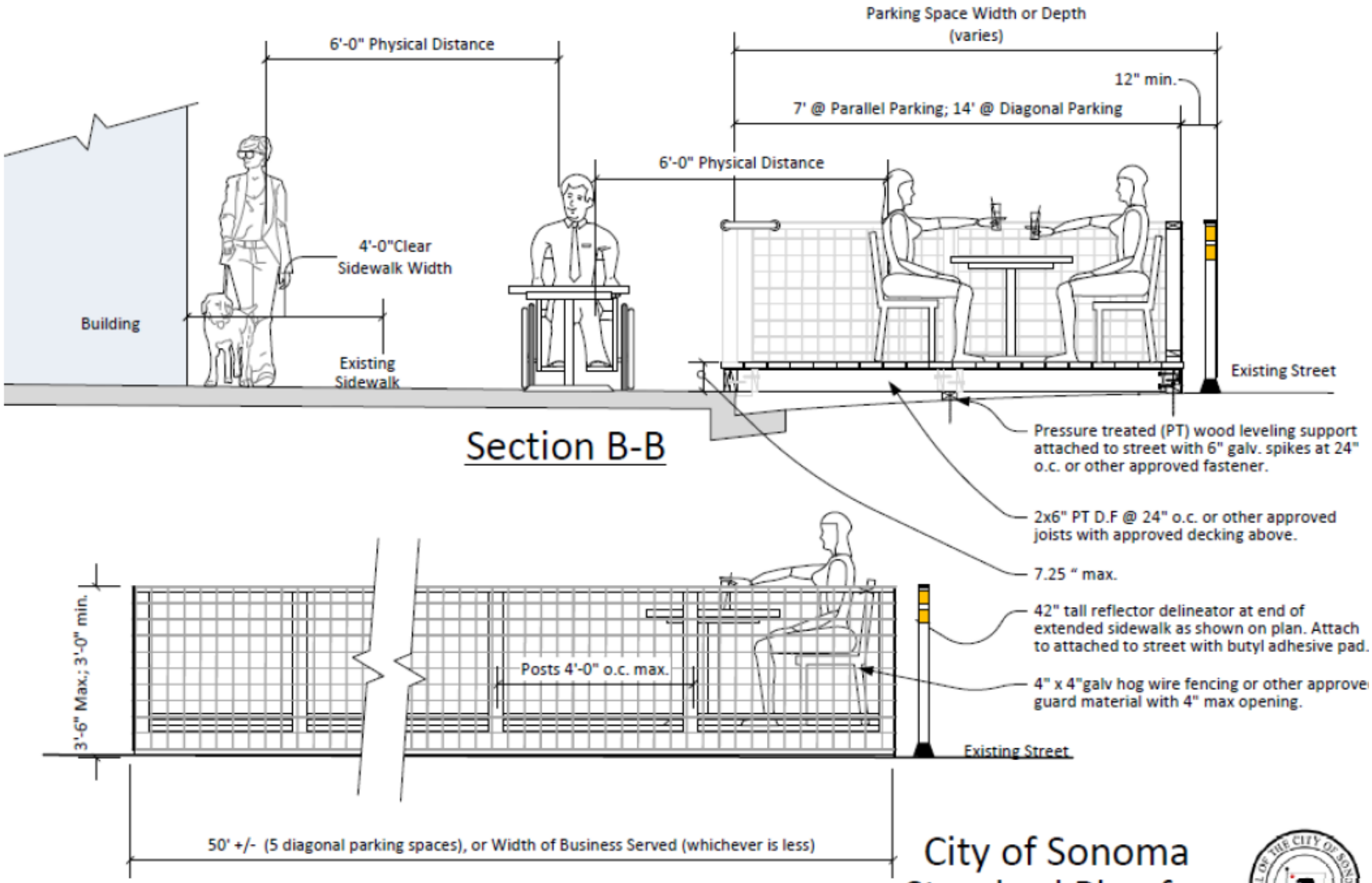

City of Sonoma Standard Plan for Temporary Raised Parklet

SP-08

REV 9/21/20

REV 9/21/20

APPENDIX C: PARKLET DESIGN SAMPLES

These guidelines are intended to provide in-depth detail on what is permissible in terms of parklet location and construction. Each parklet should have its our unique look and feel that fits a business's brand image. Your final parklet design should reflect the quality you want to present as a business. Standard parklet designs may not work if the street cross slope is too steep and decking may be required. What is provided here are design samples to assist you in including quality aesthetic elements into your parklet design.

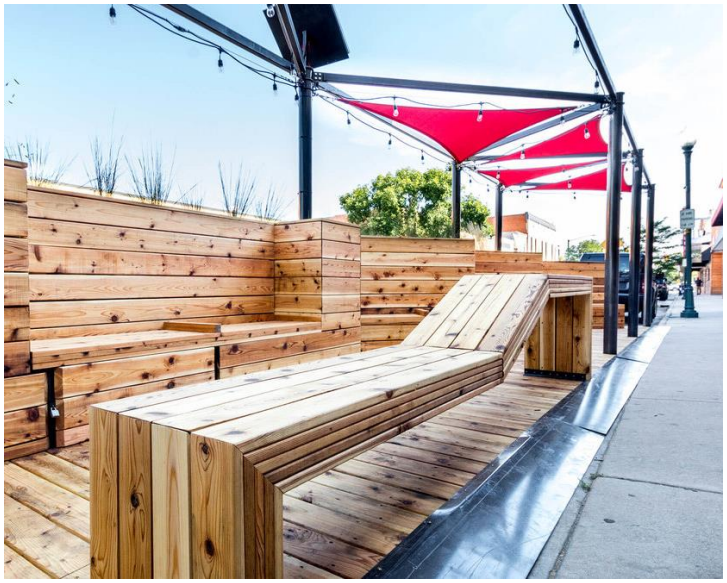

APPENDIX D: HEALDSBURG FLOOD HAZARD ZONES

We now live in an environment that is more vulnerable to fires and floods than ever before. The Healdsburg community must prepare for the next disaster, or round of disasters, that could impact residents and businesses. Provided is flood map so you are aware if your parklet is being constructed in a flood hazard zone.

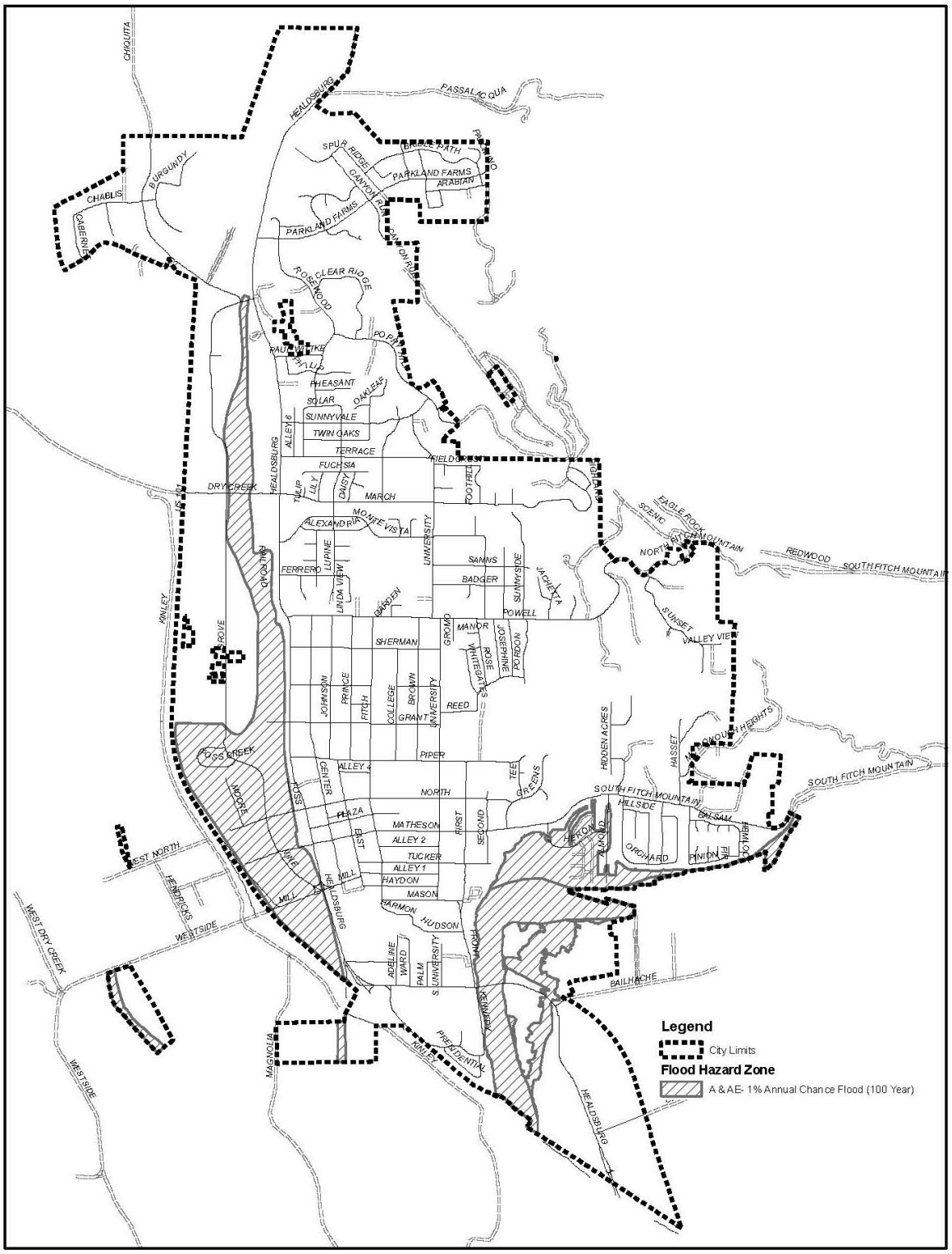

Source: Federal Emergency Management Agency, 2007.

CHRISTOPHER A. JOSEPH & ASSOCIATES
Environmental Planning and Research

NORTH

Figure IV.I-1
Healdsburg Flood Hazard Zones

APPENDIX E: SELF-INSPECTION CHECKLIST

Below you will find a helpful checklist to assist you in keeping your parklet in compliance with the Ongoing Parklet Program Guidelines. Provided below is for informational purposes only and should be used as a helpful guide. Please know that the items below are not comprehensive as each parklet permit conditions differ by location and intended use.

PARKLET PERMIT – SELF-INSPECTION CHECKLIST

OVERVIEW

Below you will find a helpful checklist to assist you in keeping your parklet in compliance with the Ongoing Parklet Program Guidelines. Provided below is for informational purposes only and should be used as a helpful guide. Please know that the items below are not comprehensive as each parklet permit conditions differ by location and intended use.

ENCROACHMENT

(X)	ITEM / DESCRIPTION
	Operation area does not encroach into private property without prior approval.
	A parklet shall not block or encumber the working space around storm water drainage, transit stops, driveways, manholes, or public utility valves/covers.
	Fire Department connections, fire hydrants, and designated red zones are unobstructed
	You must always keep a 48” walkway open for pedestrians and not allow customers to move chairs or tables to infringe on the public walkway.
	The parklet must have a seamless connection to the existing curb to meet ADA requirements.

ROAD BARRIERS

(X)	ITEM / DESCRIPTION
	Vehicle deterrents such as barricades, planters, wine barrels, or other objects are filled with water, soil, sand, or other heavy material.
	Heavy planters, filled wine barrels, or other heavy objects are installed within the parking space(s).
	Barriers adjacent to the traffic lane are no more than 6’ apart.
	Barriers do not reach beyond the painted white parking markers, unless otherwise approved.
	Reflective tape or markers are placed on the corners of the parklet.

CURB INTERFACE	
(X)	**ITEM / DESCRIPTION**
	Parklet allows for stormwater flow and drainage along the curb.
	The top of the decking shall be flush with the curb (no more than 1/2” horizontal gap), level with the adjacent sidewalk (no more than 1/4” vertical deviation).

CANOPIES & SIDE WALLS	
(X)	**ITEM / DESCRIPTION**
	Canopies shall have a fire-resistant certification or flame certification showing material is in compliance with either California State Fire Marshal with approved seal or meets NFPA 701 flame retardant standards.
	The head clearance under canopies is 90’ (ideally 96’).
	Building address is unobstructed or you have provided a numerical address on the street facing side of your parklet so that it is easily viewable from the roadway.
	There is no temporary tenting installed in the parklet. No exception.
	The combined sidewall area (all 4 sides) shall not have less than 50% of clear unobstructed openings around your parklet <u>at all times</u>. and <u>only during times of direct sunlight, rain or heavy wind.</u>
	All temporary sidewall material/fabric, placement, and attachment method have been pre-approved as part of your permit.
	Sidewalls remain in the up position when parklet is not in use or when there are no great weather impacts that disrupt customers when in use.

HEATING DEVICES	
(X)	**ITEM / DESCRIPTION**
	The use of propane heaters requires a permit from the fire code official.
	Heating devices must be kept a minimum of 3’ away from combustible materials at all times.
	Businesses must have sufficient fire extinguishers to cover indoor and outdoor spaces.
	Portable, electric space heaters are located at least 3’ from any combustible materials, including sidewalls, ceiling, umbrellas, and all other combustible materials.
	A CUPA (propane permit) has been obtained if using portable outdoor gas-fired heating appliances within a canopy.
	A fire extinguisher is located within 75’ of any propane heaters.

LIGHTING	
(X)	**ITEM / DESCRIPTION**
	Lighting is placed in a manner and brightness level to avoid distraction to drivers
	All outdoor electrical must be cord and plug connected using a Ground Fault Circuit Interrupter (GFI) electrical receptacle.
	Cords or wiring at ground level must be covered or installed to prevent trip hazards.
	Lighting is limited to the structural elements of the parklet and cannot be attached to public trees, light poles, or other City-owned infrastructure.
	They are at least 7.5’ feet high to allow vertical clearance for pedestrians.
	At no time should any business tap into City-owned power or any other public utility.

SIGHT LINE	
(X)	**ITEM / DESCRIPTION**
	Parklet maintains a minimum overhead clearance of 90” (preferably 96”) including clearance for a canopy, umbrella, or similar element, to avoid creating a visual barrier and to provide adequate clearance for people.
	Traffic deterrents must be connected to create a perimeter that deters individuals from entering the traffic lane from the parklet. This is also required for ABC purposes.
	Parklet does not create an unsafe condition by limiting necessary line of sight from driver to signage, traffic, or pedestrians.

MAINTENANCE & LANDSCAPING	
(X)	**ITEM / DESCRIPTION**
	Interior and exterior of parklet is clean and free of trash and leaves.
	Landscaping is well manicured and not encroaching into traffic.
	Gutter is clean an the is no leaf or sediment build-up.

MURPHY
STEPHEN & WALKER

Parklet

Kelly A London
Deborah A London
The Coffee Roastery
701 San Anselmo Ave
San Anselmo, CA 94960
415-269-6970
April 12, 2022

RE: Workshop 3
Permanent Outdoor Dining Areas and Parklets

Dear Town Council Members

This is Deborah and Kelly London writing.
We own The Coffee Roastery here in San Anselmo

Whats going on here?
Why isn't San Anselmo moving forward to permanence?
This shouldn't even be up for discussion.

Enough Workshops.
Workshops 1 and 2 were more than sufficient.
Take a Stand.
Lead.

Why are 4 or 5 people/businesses allowed to manipulate this issue and ignore the will of the many who support Permanent Outdoor Dining.

We have been in the Coffee Business for over 42 years. (yes-Forty Two)
We have a location in Fairfax as well. Never has it been more difficult to operate a small business than the last couple years.

We are writing again to empathically support the Permanence of San Anselmo outdoor dining spaces and Parklets.

We strongly encourage the Town Council to join the many Towns and municipalities moving forward to Permanent Parklets and Outdoor dining spaces.

Im sure your aware of the results of Fairfax Survey on this issue.
Permanent Outdoor Dining Areas were supported by the community by over 90%.
Less than 10% opposed.

Why are 4 or 5 people/businesses allowed to manipulate democracy, the will of the many who support Permanent Outdoor Dining Spaces here in town.

These Outdoor Dining Spaces are crucial to the life of San Anselmo businesses and to the Town itself.
Without them, honestly, San Anselmo is perceived as a boring town.
No theatre, no bars, no live music, no fun, etc. etc.

These outdoor dining spaces have Saved San Anselmo!

The Coffee Roastery and many other businesses could not and would not be in business today without Outdoor Dining Spaces

Take these spaces away and this town returns to its previous position of a boring, lack lustre town with no vitality and no fun. (Not just our words,)

We NEED these Parklets and Outdoor Dining Areas to be Permanent Fixtures to the town.

These outdoor spaces have created a beautiful sense of vibrancy, excitement and success in a town that sorely needed it.
People now actually want to be here in town to enjoy being with other people in the outdoor seating venues.

Cars dont do that.
Never have.
Never will.
The amount of business brought to town by outdoor dining spaces far exceeds any perceived value of parked cars. That value should be zero.
We can live without the 5- 10-20 parking spots replaced by these beautiful Outdoor Dining Spaces..
These Parklets are bringing business to town.
We have happy people sitting outside supporting local business.
That's what every town wants.
That's what the many towns have learned who are moving to permanent outdoor dining.

Its either a beautiful outdoor dining space or a hunk of metal parked in front of store fronts for hours and hours at a time. Outdoor Dining Areas bring people and people walk in businesses' and spend money.

In Fairfax there are a few store fronts that have an outdoor dining area in front of their business. One such retail business is located next to Fairfax Coffee Roastery. The owners of this retail business enjoy a robust retail business partially resulting from visitors of The Coffee Roasterys parklet who then support their retail business.
Outdoor Dining Areas help retail by drawing customers to retail businesses.

Lets join the many municipalities that have moved toward Permanent Outdoor dining spaces.

Take these spaces away and San Anselmo will most definitely loose business to all the neighboring towns who have chosen to embrace vitality, community and what is best for business in a township.
That being these Permanent Outdoor Dining and Parklets.

Don't let the Very few people/businesses who oppose our Outdoor Dining Spaces commandeer the spirit of support the Many have brought to this issue.
Don't let the 8% or less control this very important issue.

Outdoor Dining Areas and Parklets are in the best interest of the success of businesses in San Anselmo.

Listen to the People.
They have Spoken.
Permanent Outdoor Dining Spaces and Parklets MUST prevail.

The very Life of San Anselmo is intrinsically linked to Permanent Outdoor Dining Spaces.

Thank you for your consideration in this important matter.
Lets move forward.
San Anselmo NEEDS these Outdoor Dining Spaces.

The People have Spoken.

Respectfully,

Deborah A London
Kelly A London
The Coffee Roastery
415-269-6970
415-717-0429
thecoffeeroastery@gmail.com

Keep Parklets in Downtown San Anselmo

Background:

In anticipation of the April 14 workshop the Town of San Anselmo is conducting to solicit feedback on Parklets, a petition was started to gather signatures from people who support keeping parklets in downtown San Anselmo. Signatures were gathered both online and on paper.

Overview:

Petition timeframe:	2 weeks (March 24-April 6)
Total signatures:	532
San Anselmo residents:	348
Ross Valley Residents:	443

Please be sure to review the comments of many of the signers.

RECEIVED
APR 11 2022
TOWN OF SAN ANSELMO
BUILDING, PLANNING & PUBLIC WORKS

Save Cucina's Parklet

Published by Donna Seymour on 24th Mar 2022

The San Anselmo Town Council is seeking feedback and will be voting on whether to keep parklets in the downtown district. Parklets add to the vibrancy of our downtown and help make San Anselmo a compelling destination for the community and visitors alike. They also provide a safer dining option for those in our community who are immunocompromised and are highly susceptible to Covid 19. Our parklets bring more people downtown, which is good for all businesses.

We the undersigned call on the San Anselmo Town Council to allow parklets to remain in downtown San Anselmo and authorize the establishment of reasonable guidelines for the regulation and maintenance.

NAME	PHONE	EMAIL
Grace McMillan	415-300-6457	gracecmcmillan@icloud.com
Charlie Allen	510.333.8477	charlie.allen@avismyang.com
Gretchen Richardson	415.595.3915	gretchen@richardsonclark.co
CLARK RICHARDSON	415.271.1926	CLARK@RICHARDSON@me.com
DEBORAH KEISER	415.686.7931	dpkeiser@me.com
CHRISTOPHER KEISER	415.686.7318	keiser@me.com
AMIE DEWANE	415-342-4527	amiedewane@gmail.com
RAMONA DEWANE	415-717-0030	ramonadewane@gmail.com
PAUL DEMARTINI	415 794 4126	PRDEMARTINI@GMAIL.C
CHRISTOPHER DOWNS	917 318 8075	CTDOWNS@ICLOUD.COM
MARCO INNOCENTI	(415) 306.2670	toscano576@gmail.com
Natasha Innocenti	415 595 8775	natashainnocenti
Gianna Innocenti	415 948 8563	ginnocenti@oxy.edu@gmail.co
Noah Gardner	415 521 8960	noahgardner303@gmail.com
Jane Quinn	917-603-9242	janelauren72@hotmail.com
Traci Upp	415 336 2755	traciupp@yahoo.com
Brett Finkelstein	415 846-9965	brettfink@gmail.com
Heidi O'Reilly	415-250-3395	oreillyhm@gmail.c
Michael O'Reilly	510-316-2117	moreilly87@gmail.co
David Quinn	925-314-6094	david.quinn@hotmail.com
John Farrell	415-302-6000	jfarrell4444@gmail.co
Andrea Clare	415-385-2525	andrea_clare@[illegible].com
Anna Clare	415 385 2552	aclarell@gmail.com
Pedro Carmona	(415) 225-7337	pedrocarmonar64@gmail.c
Peggy Woodring	415-117-1853	peggywoodring@gmail.com

HELP US KEEP OUR PARKLET!

NAME	PHONE	EMAIL
AMY REISCH	415-203-3282	alreisch@gmail.co
KRISTINA SCHUBECK	415 715 7318	KRISTINASAFM@GMAI
Peggy Coss	415 456-5142	pcoss@comcast.ne
Eileen Hall	650-678-5557	eileenhall@sbcglobal.net
Gage Horser	415-686-2936	gage-horser@gmail.com
L Hambler	415 233 1659	LHambler
Larisa Stuart	415-516-0019	kdstuart1@Gmail.com
L Solarz	273 230 0022	lmsolarz@yahoo.com
K Propst	415 823 2163	KLKNABLE@GMAIL
Victoria Lopez	832-407-2467	valopez4@dons.usf.edu
Pyper Healy	415-991-9774	pypersux@gmail.com
RICH SHARP	415.794.4232	SHARPR@STUDIOFIVE-DESIGN.COM
Rich Burns	415 577 9089	rich@gnutwo.com
Kim Stevens	415-601-0022	mosequoia22@gmail
Mark Stevens	415 307-1203	"
Alexa Price	415-722-7579	alexaprice12
Angela Hart	415-302-9883	angelamhart15@yahoo.com
Chris Hart	415-300-6361	ckhart20@gmail.com
Jill Korst	415-806-0501	jillkorst@yahoo.com
COREY KORST	415-686-3043	
Jerry Lidey	415-601-1081	
Shawn Gillam	415 265.0685	shawnnshawn
Melanie Deitch	415-944-0802	millerassociates.us
Christine Hueber	530.448.1730	christin@christinehueber.com
Kirsten Ruppin	415 261 8584	kirsten.ruppin@gmail.com

Help Cucina Save Its Parklet

The San Anselmo Town Council will be voting on whether Cucina can keep its parklet. We believe that the parklet adds vibrancy to downtown and encourage the town council to vote in favor of a long-term program to maintain parklets on San Anselmo Avenue.

Name	Town	email	phone
Ivy O'Hair	Santa Rosa	ivyohaire gmail.com	707-696-5900
Jonathan Smith	San Anselmo	jonathan_y_smith @yahoo.com	415.515-3644
Miranda Maas	San Anselmo	mirandathecoach@gmail.com	415.4978366
Malia Fitzgerald	San Anselmo	missmaliakate@ icloud.com	415-4978364
Aviv Raphael	Corte Madera	avivraphael@gmail	646.648.3218.
Carlos Araya	Corte Madera	carayal0@gmail.com	415-427-2921
Kristin Sardina	Corte Madera	kristin.sardina@gmail.com	978 771 8801
Mike Keim	Ross	mike@marinmineral.com	415-342-1852
Stephen Gunder	San Anselmo	stephengunder@yahoo.com	310-351-2284
Cari Gunder	San Anselmo	carilev@hotmail.com	3123437137
Rachel Felson	Mill Valley	RachelLund@mac.com	404.680.6808
Molly Baker	Mill Valley	MPollack5@yahoo.com	404.210.1595
Kileigh Hahn	San Anselmo	kileighh14@gmail.com	323-422-8531
STEVE MAURO	SAN ANSELMO	mauro.c.steven@gmail.com	303-720-8991
Ann Montgomery	San Anselmo	annmontgo@gmail.com	202-215-1435

Help Cucina Save Its Parklet

The San Anselmo Town Council will be voting on whether Cucina can keep its parklet. We believe that the parklet adds vibrancy to downtown and encourage the town council to vote in favor of a long-term program to maintain parklets on San Anselmo Avenue.

Name	Town	email	phone
Merrill Joy	Tiburon	mjslaughe@gmail.com	415.465.9133
Donna Aldridge	Ross	donnaaldridge@mac	(707) 484-9175
Kris Mansbridge	San Anselmo	2girls2boys2@gmail	(415) 225-4416
KENDRA NIEDERMANN	SAN RAFAEL	kendraniedermann@gmail.com	415.939.899
Anna Clare	San Anselmo	aclare11@gmail	4153952552
gabrielle clare	san Anselmo	gabrielleclare22@gmail.com	4156864622
John Farrell	San Anselmo	jfarrell4444@gmail.com	415-302-6600
Ann Leahy	Fairfax	anndalyleahy@gmail.com	415-867-0
Garrett Leahy	Fairfax	leahystate@gmail.com	415-816-1902
Adrianne Hernandez	San Rafael	Loudviolet@yahoo.com	920-915-528
Alan Seymour	San Anselmo	aseymour24@gmail.com	(415) 275-4888
Bryan Valverde	San Anselmo	Valverdocol3@gmail.com	415 367-5963
Jenna Vellon	San Anselmo	Jen4@Aol.com	310.365.0350
Sean D. Williams	Ross	sean@tolleher.com	(415) 847-6165
Justus Leachman	Kentfield	jleachman@comcast.net	(415) 464-1077

Help Cucina Save Its Parklet

The San Anselmo Town Council will be voting on whether Cucina can keep its parklet. We believe that the parklet adds vibrancy to downtown and encourage the town council to vote in favor of a long-term program to maintain parklets on San Anselmo Avenue.

Name	Town	email	phone
[illegible]	San Anselmo	[illegible]	415 485 [illegible]
Sally Reid	San Anselmo	[illegible]	[illegible]
Chris Adams	San Anselmo	cconadams@gmail.com	415-515-6717
Abbi Adams	San Anselmo	abbi_adams@yahoo	415.310.8820
Martin McNally	Kentfield	Martinmcnally@comcast.net	4152792[illegible]
Stephanie McNally	Kentfield	stephaniemcnally@gmail.com	415 279-282
Christy Coel	Ross	christyan@gmail.com	4153105[illegible]
Dylan Coel	Ross	~~Logan~~ Dylan coel@gmail.com	4154485692
Logan Coel	Ross	~~Dylan~~ Logan coel@gmail.com	4154485692
David Coel	Ross	davidcoel@yahoo	401-225-44[illegible]
Susan Kay	Ross	susankay0313@gmail	415 302 4775
Jeffrey Rudsten	Ross	jrudsten@comcast.net	4154568830
Andrea Wolman	San Anselmo	imagineandrea@aol.com	310-569 7565
Jennifer Lebsack	San Rafael	jlebsack@comcast.net	415-819-0[illegible]
KRISTINA SCHUBERT	FAIRFAX	KRISTINASAFM@GMAIL.COM	415 715 7318

Help Cucina Save Its Parklet

The San Anselmo Town Council will be voting on whether Cucina can keep its parklet. We believe that the parklet adds vibrancy to downtown and encourage the town council to vote in favor of a long-term program to maintain parklets on San Anselmo Avenue.

Name	Town	email	phone
Andrea Leavitt	San Anselmo		415-456-5251
McKenna Silva	San Anselmo		415-847-4589
Kristin Hite	Mill Valley	KHHite@comcast.net	415 299-4898
Laurie Nordone	San Anselmo	Laurie-Nordone@outlook.com	they should come to a compromise with the shop owners to be fair about it!
CHRIS MORIN	SAN ANSELMO	CMorin415@AOL.com	
George Parker	San Anselmo	ledoff45@yahoo.com	(415)578-0683
EDWARD PURDOM	San Anselmo	nedpurdom@gmail.com	415 457 7418
Ellin Purdom	San Anselmo	ellinpurdom@gmail.com	415-457-7418
Philip Hynes	San Anselmo	pbirdiehynes@gmail	415-407-922
Lisa Brosnan-Hynes	San Anselmo	lisa@brosnanschool.com	415-690-96
TRACY HOGAN	SAN ANSELMO	TASHOGAN@GMAIL.COM	(415) 342-65
WM. HOGAN	SAN ANSELMO	WSHOGAN03@GMAIL.COM	415-488-7934
Natalia Perez	San Rafael	NatalyP99401@gmail.com	415-261-8113 *
EYA BEN	SAN ANSELMO	EYABENKHMIS97@gmail.com	628 253 38
Magid Nazari	San Anselmo	magid@ludwigsfinewine.com	415-456-1820

Help Cucina Save Its Parklet

The San Anselmo Town Council will be voting on whether Cucina can keep its parklet. We believe that the parklet adds vibrancy to downtown and encourage the town council to vote in favor of a long-term program to maintain parklets on San Anselmo Avenue.

Name	Town	email	phone
MATTY MARTIN	FAIRFAX	MATTYWYATTMARTIN@GMAIL.COM	415 497 1611
Kristin Raymaker	Fairfax	kristin.raymaker@gmail.com	415.250.80
Eric Hill	SAN ANSELMO	ERIC.SCHYLER@GMAIL.CO	(701) 505-8952
Al Stoll	ROSS	astoll@stoll-law.com	415-716-2933
Julie Stoll	ROSS	julstoll@gmail.com	415-716-200
Kim Silva	San Anselmo	kim@44sraw.com	415 847 6074
Tannin Silva	SA	tannin@cdu.com	415 847-9051
Chelsea Buchholz	SA	Chelsea.silva225@gmail.com	415-847-9051
Amanda Seki	Novato	amanda_seki2829@yahoo.com	415-264-749
Mary Buchholz	Novato	Mbuchholz25@gmail.com	(415) 497-6515
Doree Allen	Inverness	doree.allen@stanford.edu	(415) 497-5712
Annie Baxter	Inverness	anniewbaxter@gmail.com	(415) 663-1222
Leyla Hilmi	San Anselmo	leylahilmi@hotmail.com	415 686 1878
Sarah Nichol	San Anselmo	sarahnichol@mac.com	4152547217
Milan Lanser	San Anselmo	milanlanser@gmail.com	415 342 024

Help Cucina Save Its Parklet

The San Anselmo Town Council will be voting on whether Cucina can keep its parklet. We believe that the parklet adds vibrancy to downtown and encourage the town council to vote in favor of a long-term program to maintain parklets on San Anselmo Avenue.

Name	Town	email	phone
Guy Benstead	Corte Madera	gbenstead@comcast.net	(415)461-3531
Sam Cook	San Anselmo	samuel.cook19@gmail.com	(415) 385-6450
Heyner Santos	San Rafael	jeik592@hotmail.com	415 717 3617
Roberto Avila	San Rafael	roberto avila72@yahoo.com	(415) 250-190
Alex Mejia	San Rafael	Alex anel n	415 336 8213
Cassie Klein	Ross	Cassieklein@hotmail.com	415 259-8
Patricia Conway	San Anselmo	pkconway@yahoo.com	415-706-0365
↳ I would be in favor of shutting traffic to a portion of S.A. Ave. permanently - Italian Piazza			
Sarah Garibaldi	Ross	sarah.garibaldi@gmail.com	817-713-6
Priya Femmer	Ross	priya.femmer@gmail.com	4152156308
Kim Shuart	SA	kimrshuart@yahoo.com	
Robert B Stringer	SA	bstringer997@gmail.com	415 324-9084
Clayton Moore	Larkspur	clayton.moore@mac.com	415 250 2249
Brooke Moore	Larkspur	bkenmoore@mac	415 250 3559
BJ McAllister Martin	Ross	zapmarin@comcast.net	415-459-643
Chris Martin	Ross	Rosscitizen@gmail.com	415.215.8411

Help Cucina Save Its Parklet

The San Anselmo Town Council will be voting on whether Cucina can keep its parklet. We believe that the parklet adds vibrancy to downtown and encourage the town council to vote in favor of a long-term program to maintain parklets on San Anselmo Avenue.

Name	Town	email	phone
AARON MASON	SAN ANSELMO	AARON.MASON.SF@GMAIL	808.888.9018
ALICE LEE	SAN ANSELMO	dalee712@gmail	415.235.8165
Zach Felson	San Anselmo	zfelson@gmail.com	512 6363722
Sam Baker	Mill Valley	sambaker27@gmail.com	646-894-9
Brian WHITE	San Anselmo	Cedarhouse construction @comcast.net	415 286-1359
Michelle White	San Anselmo	michellewhite275@icloud.com	415.309.1670
Joe Hayes	S.F.	joe_hayes@hotmail.com	40-867-48
Nicola Bach	San Rafael	nicolabach@hotmail.com	415 205 0231
Heather Ryan	San Anselmo	heatherryansmf@yahoo.com	415.261.817
BRIAN Schroth	San Anselmo	bjschroth@gmail.com	415 269 4100

#	First name	Last name	Email	City	State	Date
1	Anna	Camera	anna1camera@yahoo.com	Fairfax	CA	Mar 24, 2022
	Let's keep the town vibrant!					
2	Annelise	Bauer	annelise@alumni.princeton.edu	San Anselmo	CA	Mar 24, 2022
3	Angeleah	Donahue	Angel@gdesignpro.com	San anselmo	Ca	Mar 24, 2022
	Please don't take away the very best thing that happened because of Covid- Our outdoor seating is so important And valued!! Thank you					
4	Jim	seymour	jdseymour02@yahoo.com	San Anselmo	CA	Mar 24, 2022
5	Erin	Peoples	erinpeoples@ymail.com	Greenbrae	Ca	Mar 24, 2022
6	Jill	Korst	jillkorst@yahoo.com	San Anselmo	California	Mar 24, 2022
7	Larry	Bauer	judylarrybauer@gmail.com	Napa	California	Mar 24, 2022
8	Linda	Kelley	kelleydesigns@comcast.net	San Anselmo	CA	Mar 24, 2022
9	David	Kavrell	hdkavrell@gmail.com	Novato	Marin	Mar 24, 2022
10	Jerry	Pompili	jerrypomp@gmail.com	San Anselmo	Ca	Mar 24, 2022
11	Suzanne	Mayer	mmmax444@gmail.com	Mill Valley	CA	Mar 24, 2022
12	Kathleen	Wolfe	kathleenlatchford@hotmail.com	San Anselmo	CA	Mar 24, 2022
	I love the outside seating!					
13	Kate	Livermore	katie.livermore@yahoo.com	San anselmo	CA	Mar 24, 2022
14	Caroline	Dowd	carolinedowd@me.com	San Anselmo		Mar 24, 2022
15	Leslie	Wilmington	princessles@msn.com	San Anselmo	CA	Mar 24, 2022
16	Jane	Nadaraja	nadaraja.jane@gmail.com	San anselmo	California	Mar 24, 2022
17	Kayla	Evans	kla_acosta@yahoo.com	San Anselmo	Marin	Mar 24, 2022
18	Nish	Nadaraja	nishisit@gmail.com	San Anselmo	CA	Mar 24, 2022
	That parklet is vital, social, and makes DT a destination. I come from a restaurant and small biz background, so speak from experience, not just as a customer.					
19	Beth	Freedman	cuddfree@pacbell.net	San Anselmo	CA	Mar 24, 2022
20	Zamira	Solari	zamira.solari@gmail.com	San Anselmo	Ca	Mar 24, 2022
21	Brad	Clark	brad.s.clark@outlook.com	Fairfax	Ca	Mar 24, 2022
	Please keep the parklet!					
22	Catherine	Wright	catherinedeanwright@gmail.com	San Anselmo	CA	Mar 24, 2022
23	Jeffrey	Leslie	jeffleslie@yahoo.com	Greenbrae	CA	Mar 24, 2022
	Please keep the parklets. They are good for the businesses that are driving the most community gathering, fun, and tax revenue. Thanks!					
24	Tanya	Clarl	tanya@jambar.com	Fairfax	CA	Mar 24, 2022
	Keep Cucina parklet!!					
25	Chizzie	Brown	chizandtom@hotmail.com	San Anselmo	CA	Mar 24, 2022
	I love the parklet!					
26	Ted	Murphy	tedmurphy@gmail.com	570 Oak Ave	CA	Mar 24, 2022
	Please keep the Parklets!!!					
27	Jen	Banks	jennifertbanks01@gmail.com	San Rafael	Ca	Mar 24, 2022
	Absolutely yes.					
28	Kimberly	Das	kimdas1313@gmail.com	San Anselmo	CA	Mar 24, 2022
29	Patti	Cocciolo	patti_cocciolo@mac.com	San Anselmo	CA	Mar 24, 2022
	Please, please keep the beloved Cucina Parklet! These al fresco dining spots were a lifeline during the pandemic for all of us, and I think we've all learned that they continue to bring life and community to our sweet town. Please don't remove these ever, and especially not as spring is springing!!					
30	Amie	Yudice	amie.yudice@gmail.com	San Rafael	California	Mar 24, 2022
	We love cucina and the parklet!					

Powered by GoPetition

#	First name	Last name	Email	City	State	Date
31	Holly	Casey	caseykidz@gmail.com	San Anselmo		Mar 24, 2022
32	Carey	Clahan	cclahan@laughingglass.net	Mill Valley	CA	Mar 24, 2022
	Please don't lose this incredible asset to San Anselmo!					
33	Magdalena	Salladay	magmosal@hotmail.com	San Rafael	Marin	Mar 24, 2022
34	Erin	Aradi	efalucy@yahoo.com	San Anselmo	CA	Mar 24, 2022
35	Sydney	Rainin-Smith	sydneyrainin@gmail.com	San anselmo	California	Mar 24, 2022
	We love the parklets!!!!					
36	Luigi	Troccoli	luigitroccoli@gmail.com	Dan Rafael	Ca	Mar 24, 2022
37	Dominic	Johnson	dj@katjohn.com	San Anselmo	CA	Mar 24, 2022
38	Ruth Ann	Keene	r_a_keene@hotmail.com	San Anselmo	CA	Mar 24, 2022
39	John	B. Anderson	jba3@sbcglobal.net	San Anselmo	California	Mar 24, 2022
40	julie	kennedy	juliekennedy80@hotmail.com	San anselmo	Ca	Mar 24, 2022
41	Kaitlin	Gilbert	kaitlin.lopin@yahoo.com	Fairfax	CA	Mar 24, 2022
42	Kevin	Clahan	clahan@clahan.com	Mill Valley	CA	Mar 24, 2022
	Please be forward thinking and recognize the value to the community.					
43	Elizabeth	Rivera	lizrivera527@gmail.com	San Rafael	Ca	Mar 24, 2022
44	Germain	Michel	germainmichel@ameliewinebar.com	Forest knolls	Ca	Mar 24, 2022
45	Jaison	Layney	jaison.layney@gmail.com	San Rafael	CA	Mar 24, 2022
	Keep the parklets please!!					
46	Darcy	Bell	darcytbell@gmail.com	San Anselmo	CA	Mar 24, 2022
47	Jeanine	Thompson	Jeaninegt@comcast.net	San Anselmo	California	Mar 24, 2022
48	Robert	Brown	robert.h.brown415@gmail.com	San Anselmo	California	Mar 24, 2022
	Dear San Anselmo Town Council - please keep the parklets! They are a wonderful addition to the good energy of the town, and make it charmingly "human scale". One good silver linings from these bad two years of COVID					
49	Ray	Diaz	rscottdiaz@gmail.com	Kentfield	Ca	Mar 24, 2022
	Keep the parklet open and the street closed on weekends.					
50	Heidi	Darling	hdarling77@gmail.com	San Anselmo	CA	Mar 24, 2022
	Parklets are the best thing to happen to this town. Please consider their socio and economic impact is					
51	Tom	McInerney	tmm@odnss.com	San Anselmo	CA	Mar 24, 2022
	Please continue to allow the park let in front of Cucina					
52	Josh	Ferenc	josh.ferenc@gmail.com	San Anselmo	CA	Mar 24, 2022
53	Alexandra	Endress Giese	alexandrabrooke@gmail.com	San Anselmo	CA	Mar 24, 2022
	Thank you for creating this survey. Parklets, creek park, and weekend street closures have made a massive impact on my family's happiness, quality of life, community connections, and pride in our town. I can't speak at council meetings because I'm home w my 3 young kids after a day at work. While I care passionately about keeping parklets downtown, as both a professional urban planner and downtown resident, I still cannot find a way to prioritize attendance at these meetings. Being in the public sector myself, this pains me to admit. I know this is the same for many more families with working parents, young kids, or both. We moved here for the quality of life in this sweet town. Parklets are an asset, and allow public/private space to conveniently blur. Parklets foster conversations, neighbor relations, and support our beloved community businesses. I appreciate Cucina, longway, taco janes, comforts, and all our businesses brave enough to embrace and invest in these parklets for us. Please, please please, keep our parklets and make this permanent. We've come to cherish them. They're a part of our community and we can't let them go. Sent via Siri in a hustle, please forgive typos.					
54	Lund	Susan	susan.lund@mac.com	San Anselmo	CA	Mar 24, 2022
55	Angela	Hart	angelamhart5@gmail.com	San Anselmo		Mar 24, 2022
56	Dave	Metz	davidametz@gmail.com	Fairfax		Mar 24, 2022
57	Cassidy	Sears	cassidy@siriusman.com	San Anselmo	CA	Mar 24, 2022
58	Chris	Hart	ckhart20@gmail.com	San Rafael		Mar 24, 2022
59	Nigel	Hall	nigel@hallnet.com	San Anselmo	California	Mar 24, 2022

#	First name	Last name	Email	City	State	Date
	Please allow all the parklets to remain. They're such a great addition to the town.					
60	Toby	Pearson	tobyincali@gmail.com	Encinitas	CA	Mar 24, 2022
	The park keys are a fixture in san san anselmo. They make it the quaint little town it is. It would be a travesty to develop them.. keep Sam anselmo, san anselmo. Don't turn it into something it's not!!					
61	Lynnette	Kling	lk@findamarinhome.com	San Anselmo	CA	Mar 24, 2022
	The outdoor dining has a European feeling and makes the town seem more inviting and lively.					
62	Jonathan	Smith	jonathan_y_smith@yahoo.com	San Anselmo	CA	Mar 24, 2022
	We love the parklet's!					
63	Kate	McMillan	katemcmillan70@hotmail.com	San Anselmo	string:CA	Mar 24, 2022
	Love the Cucina parklet! Adds so much to our town!					
64	Ann	Leahy	anndalyleahy@gmail.com	Fairfax	CA	Mar 24, 2022
	Save the parklet! This adds additional space for our restaurants and also provides a lively atmosphere to the town!					
65	Valerie	Lane	valerielane.bellamy@yahoo.com	Fairfax	Ca	Mar 24, 2022
	Keep the wonderful outdoor dining!!					
66	Michael	Lipson	lipson@comcast.net	San Anselmo	Ca	Mar 24, 2022
	Keep all our parklets! Hi understand they occupy parking spaces but in the 30 years I've lived here I've never been more drawn to walk and hangout down town and never felt as much vibrancy and community. I appreciate that other retailers may feel it's unfair. But I do believe that having a more vibrant and populated downtown will benefit all, not just those w/parklets. A possible solution may be to charge an appropriate mixer monthly parklet fee that can be used in total to help draw more consumers to all retailers. If those w parklets don't like it, they can remove parklet & opt out.					
67	Michelle	Cox	michelle@reality.net	San Anslemo	CA	Mar 24, 2022
68	Kyle	Biehle	mbiehle@gmail.com	San Anselmo	CA	Mar 24, 2022
	Save the San Anselmo parklets! They have created a vibrant downtown and helped local restauranteurs.					
69	Romain	Martinez	r.martinez.secl@gmail.com	San Rafael	California	Mar 24, 2022
	These outdoor dining areas bring life into our streets !					
70	Otis	Guy	og@otisguycycles.com	Fairfax	California	Mar 24, 2022
	The parklets are a tremendous addition and give a welcoming feel to downtown San Anselmo					
71	Joelle	Ott	joelleott@hotmail.com	San Anselmo	California	Mar 24, 2022
72	Pascale	Gregory	pascalegregory7@gmail.com	San Anselmo	CA	Mar 24, 2022
73	Rennic	Mirsky	renniebird@gmail.com	San anselmo	Ca	Mar 24, 2022
	You'd be foolish not to keep them					
74	Samantha	Funk	sammyfunk@gnail.com	Fairfax		Mar 24, 2022
75	Valerie	Goffin	valeriegoffin@me.com	San Anselmo	CA	Mar 24, 2022
76	Carolyn	Clahan	maters_pistil_0a@icloud.com	Tiburon	CA	Mar 24, 2022
77	Rebecca	Goberstein	rgoberstein@gmail.com	San Anselmo	CA	Mar 24, 2022
	Save this gathering space that brings charm to the town!					
78	Tonya	Williams	tmflint@hotmail.com	San Anselmo	CA	Mar 24, 2022
79	Sara	Hess	sara.rahel.hess@gmail.com	San Rafael	CA	Mar 24, 2022
	These parklets have become an epicenter of life in San Anselmo. They are a way for our community to gather safely and for business to thrive! They allow us to enjoy the outdoors and take in the splendor of San Anselmo and the gorgeous weather we have for so much of the year. To take them away would Be heartbreaking!					
80	Lindsey	Holtaway	lindseyholtaway@gmail.com	San Rafael	CA	Mar 24, 2022
	Please keep the parklets open downtown! We love the one at Cucuna especially. They (and the atmosphere they create) are one of the reasons we choose San Anselmo for our dinners out over all of the other options available to us here in Marin. It would be such a shame to lose that!					
81	Raj	Singh	raj@blueacre.com	San Anselmo	CA	Mar 24, 2022
82	Kristin	Capasso	lose_peaty0w@icloud.com	Fairfax	California	Mar 24, 2022
	Love all the parklets! They make the street feel so alive. Many European cities do this. Why can't we?					
83	Michelle	Beresh	michellepmb@yahoo.com	San Anselmo	CA	Mar 24, 2022

Powered by GoPetition

#	First name	Last name	Email	City	State	Date
	Keep it its fabulous and build community					
84	Sean	Solway	ssolway1@comcast.net	San Anselmo	Marin	Mar 24, 2022
	Keep Parklets! Keep San Anselmo Vibrant and alive!					
85	Susan	Reed	susan@cybereeds.com	San Anselmo	CA	Mar 24, 2022
	The parklet at Cucina is a treasure for our community. The restaurant has hired musicians to entertain both their guests and the general public during their serving hours and the outdoor space is decorative and enjoyable for guests and pedestrians alike. Please let this treasure remain in our community.					
86	Kira	Loveland	kira.s.loveland@gmail.com	San anselmo	Marin ca	Mar 24, 2022
87	Viktoriya	Wise	viktoriya.mass@gmail.com	San Anselmo	Ca	Mar 24, 2022
	There is no doubt parklet should be approved. I think one philosophical issue is the privatization of public space. It's an important one the council should deliberate but I think there is a way to address it through a very minimal rental fee. Bottom line... all downtown park lets need to stay. Between the park let and the street closure, sleepy San Anselmo has become THE place to be. And if anyone complains about parking, it's a non issue. We have plenty of parking on side commercial streets and nice new way finding signage. People with disabilities can be dropped off at the curb. Pls approve!!!!!!!!!					
88	Carissa	Guirao	carissa.guirao@mac.com	San anselmo		Mar 24, 2022
89	Jennifer	Feeney	jenniferrose.feeney@gmail.com	San Anselmo	CA	Mar 24, 2022
	Please keep the parklets! They have added so much life to our town!!					
90	Lorenzo	Scarpone	lorenzo@villaitalia.com	San Francisco	CA	Mar 24, 2022
91	Melissa	Sanchez	lissatay02@gmail.com	San Anselmo	CA	Mar 24, 2022
92	anthony	sperling	aesperling@gmail.com	San Anselmo	CA	Mar 24, 2022
	Keep the parklets and the blocked streets on the weekends					
93	Chris	Livermore	chris_livermore@yahoo.com	San anselmo	Ca	Mar 24, 2022
	Please do not continue to kill our downtown					
94	Andrea	Chester	andreacarnegie@gmail.com	San Anselmo	CA	Mar 24, 2022
	I love the parklets in our town.					
95	Laurie	Berliner	madgeandmehats@gmail.con	Fairfax	CA	Mar 24, 2022
96	Christine	Hueber	christine@christinehueber.com	San Anselmo	CA	Mar 24, 2022
	Love your parklet!					
97	Marnie	Doherty	marnie@marniedoherty.com	Sea Bright	NJ	Mar 24, 2022
98	Elissa	Vandeursen	elissarama@gmail.com	San Anselmo	CA	Mar 24, 2022
99	Dania	Shiblaq	dkshiblaq@gmail.com	Fairfax	California	Mar 24, 2022
100	Cammeron	McLaughlin	cammeronmclaughlin@gmail.com	Kentfield	California, Marin	Mar 24, 2022
101	Jonea	Aubrey	aubrey.jonea@yahoo.com	San Anselmo	CA	Mar 24, 2022
102	Alexis	Lynch	alexislynch@gmail.com	Fairfax	CA	Mar 24, 2022
103	Laura	Townsley	laura.townsley@outlook.com	San Anselmo	California	Mar 24, 2022
104	Sandra	Murtagh	sandracmurtagh@gmail.com	San Anselmo	CA	Mar 24, 2022
	Please keep these parklets. They are the silver lining of this pandemic.					
105	Teresa	Maguire	tmaguire1@gmail.com	94960	CA	Mar 24, 2022
106	Maria	Kallmeyer	mkallmeyer@mac.com	Mill Valley	California	Mar 24, 2022
	Please keep the parklets on San Anselmo Av!					
107	Dorian	Yohe	roxyfoxyqs@gmail.com	San Anselmo	CA	Mar 24, 2022
108	Jen	Oliver	jenroliver@yahoo.com	San anselmo	285 Stuyvesant	Mar 24, 2022
	We love the cucina parklet! Downtown San Anselmo was previously so sleepy and underused and has since had a wonderful vibrancy. We have enjoyed town so much more since the outdoor dining was established.					
109	Clive	Nisse	clivednisse@gmail.com	San Anselmo	California	Mar 24, 2022
110	Helen	O'Shea	oshea.helen@gmail.com	San Anselmo	CA	Mar 24, 2022
111	Alison	Wilks	alisonwilks@gmail.com	San Anselmo	Ca, Marin	Mar 24, 2022

Powered by GoPetition

#	First name	Last name	Email	City	State	Date
112	Amy	Ginsberg	beezerg@gmail.com	San anselmo	San anselmo	Mar 24, 2022
113	Lisa	Wolin	lil_links@phatbean.com	San Anselmo	Ca	Mar 24, 2022
	Keep the payments open!					
114	Clayton	Fraser	claytonfraser@comcast.net	San Anselmo		Mar 24, 2022
115	Jennifer	Matthews	matthews.jennifer.e@gmail.com	San Anselmo	California	Mar 24, 2022
	We love the parklets! They make our town better. We have dozens of empty 4 hr parking spots on our street everyday—downtown isn't lacking in parking.					
116	Jamie	Hill	jlarson23@gmail.com	Fairfax	Ca	Mar 24, 2022
117	Kelly	Murphy	kelly.murphy@gmail.com	San Anselmo	CA	Mar 24, 2022
	I spend more money in the darling little shops in San Anselmo because of the parklets, not in spite of them. Parklets draw me to shop in town					
118	Nancy	Altman	nnaltman@me.com	San Anselmo	CA	Mar 24, 2022
	Parklets bring a special European vibe to our town and they bring in outsiders to support other businesses. Please keep the parklets.					
119	Anna	Paulsson	anna.k.paulsson@gmail.com	San Anselmo	Ca	Mar 24, 2022
120	Torie	Anderson	torieanderson@comcast.net	Sonoma	Ca	Mar 24, 2022
121	Amy	Grace	amymgrace29@gmail.com	Fairfax	CA	Mar 24, 2022
122	CASSANDRA	DAVIES	cassiejaye@gmail.com	SAN ANSELMO	Ca	Mar 24, 2022
123	Kaoruko	Acker	kaorukoacker@comcast.net	San Anselmo	Ca	Mar 24, 2022
	Please keep the parklets! They are such a wonderful addition to our small town!					
124	Danielle	Salk	dvsalk@gmail.com	Fairfax	CA	Mar 24, 2022
125	Greg	Kaplan	gregkaplan3@gmail.com	San Anselmo	CA	Mar 24, 2022
126	Jill	Strub	jillstrub@gmail.com	San Anselmo	Ca	Mar 24, 2022
127	Stacey	Quinones	staceyq@gmail.com	San anselmo	Ca	Mar 24, 2022
128	Bryan	Levenson	blevenson70@gmail.com	San Anselmo		Mar 24, 2022
	Let's support our community businesses - simple.					
129	Christen	Shaw	cshaw8@gmail.com	San Rafael	CA	Mar 24, 2022
130	Rebecca	Piastrelli	becca.guthrie@gmail.com	San Anselmo	Marin	Mar 24, 2022
131	Josiane	Recollon	josianerecollon@comcast.net	San Anselmo	California	Mar 24, 2022
	Pls keep the parklets in San Anselmo					
132	Charlie	Allen	charlie.allen@avisonyoung.com	Greenbrae	CALIFORNIA	Mar 24, 2022
133	Elizabeth	Casey	bcasey30@comcast.net	San Anselmo	CA	Mar 24, 2022
	Being in the restaurant business please support cucina. Donna has worked so hard to stay alive in the business.					
134	Benjamin	Wolin	bencom@phatbean.com	San Anselmo	CA	Mar 24, 2022
	Cucina's parklet is a great addition to the town. It makes Center feel vibrant and alive in the evening					
135	Kristina	Riemer	krmailbox2@gmail.com	San Anselmo	Ca	Mar 24, 2022
	Please keep the parklet! So nice to have outdoor dining.					
136	Carolyn	Estebez	cjbucher@gmail.com	San Anselmo	CA	Mar 24, 2022
137	Trisha	Dean	trishann88@yahoo.com	San Anselmo	CA	Mar 24, 2022
138	Jaime	Jensen	info@jaimejensen.com	San Anselmo	CA	Mar 24, 2022
139	Marilyn	Weyant	marilynweyant@gmail.com	Tiburon	CA, 94920	Mar 24, 2022
	You go Donna.					
140	Olivier	Criado	olivcriado@gmail.com	San Anselmo	CA	Mar 24, 2022
	We love the parklets, they create such a great asset to downtown!					
141	Douglas	Rhiner	douglasrhiner@gmail.com	Fairfax	CA	Mar 24, 2022
	Keep outdoor dining in SA!					

#	First name	Last name	Email	City	State	Date
142	kim	baskind	baskind.kim@gmail.com	Fairfax	CA	Mar 24, 2022
	These parklets were one of the silver linings of COVID and create such a sense of community. I am					
143	Nancy	bower	nanbow@me.com	Ross	CA	Mar 24, 2022
144	Olivia	Tabert	designlovethinking@gmail.com	San Anselmo	Ca	Mar 24, 2022
145	Brad	Bauer	brad.a.bauer@gmail.com	San Anselmo	CA	Mar 24, 2022
146	Monika	K Pavlicek	monikakremen@gmail.com	San Anselmo	CA	Mar 24, 2022
147	Lisa	Hines	bellaluxelisa@gmail.com	San Rafael	CA	Mar 24, 2022
148	Adriana	Bianchi Booth	adtianabooth18@gmail.com	San Anselmo	California	Mar 24, 2022
	Keep parklets. ABSOLUTELY NECESSARY FOR SURVIVAL					
149	Erin	Mara	erinroth@mac.com	San Anselmo	California	Mar 24, 2022
	Please keep the parklets!					
150	Danielle	Conner	connerdanielle@hotmail.com	Ross	CA	Mar 24, 2022
	Please keep the parklets! They add so much to the community feel of downtown SA!					
151	Heather	Potts	heather711@gmail.com	San Anselmo	CA	Mar 24, 2022
	The parklets are great. San Anselmo has very limited outdoor dining and they add greatly to the town. There is more than sufficient parking with the paid lots and the few spaces lost are a small price to pay for all that parklets being.					
152	Jennie	Hooker	jenniehooker@yahoo.com	Mill valley		Mar 24, 2022
153	David	Allen-Hughes	3264760@gmail.com	San anselmo	Marin	Mar 24, 2022
	Fully support keeping the parklets indefinitely, however they should have a reinforced corner on the street side to help protect customers if/when a car will inevitably crash into it.					
154	Marjorie	Matthews	marmatthews@comcast.net	San Geronimo	CA	Mar 24, 2022
	Parklets attract diners and shoppers and bring in additional tax revenues.					
155	Lauren	Hamblet	lchamblet@gmail.com	San anselmo		Mar 24, 2022
156	Michael	McGarvey	michaeldmcg1@gmail.com	San Anselmo	California	Mar 24, 2022
157	George	Parker	ledoff45@yahoo.com	San Anselmo	California	Mar 24, 2022
158	Anne	Newman	annenewman2@gmail.com	San Anselmo	Ca	Mar 24, 2022
159	Kim	Lewis	kimlewis1@gmail.com	San Anselmo	California	Mar 24, 2022
160	Julie	Steier	juliesteier000@gmail.com	San Anselmo	Ca	Mar 24, 2022
161	Shannon	Wolford	shannondwolford@gmail.com	San anselmo	Ca	Mar 24, 2022
162	Jeanne	Lipson	jeannelipson1@gmail.com	San Anselmo	CA	Mar 24, 2022
163	Christina	Bryan Fitzgibbons	christina@myhoodieproject.com	San Anselmo	Ca	Mar 24, 2022
	Keep the parklets!					
164	Sarah	Conway	sarahmoore62@gmail.com	San Anselmo	CA	Mar 24, 2022
	The parklets have reinvigorated and energized our wonderful town. Cucina's in particular has created a warm and welcoming atmosphere to eat and enjoy and socialize. They have allowed our town to stay open through a very precarious situation, keeping people employed and community members together. We need these parklets to become a permanent fixture for all to benefit from and enjoy.					
165	Kathy	Johnson	kathy@consortpartners.com	San Anselmo	California	Mar 24, 2022
166	Patrick	Coll	patcoll@sbcglobal.net	218 Sir Francis Drake Blv	Marinitas	Mar 24, 2022
167	Maureen	Moulton	mmoulton328@gmail.com	San Anselmo	CA	Mar 24, 2022
	Keep San Anselmo park-lets open!! The outdoor spaces really promote community and restaurants need them!					
168	Kimberley	Stevens	mwsequoia@aol.com	San Anselmo	Ca	Mar 24, 2022
	Keep all the parklets, has enlivened what otherwise is a dying downtown. The community loves them!					
169	April	Underwood	aprilunderwood@gmail.com	SAN ANSELMO	CA	Mar 24, 2022

#	First name	Last name	Email	City	State	Date
	San Anselmo has become a better community these past two years thanks to the restaurants and town initiatives that brought San Anselmo Ave to life. While the past two years have been challenging on many levels and we are all eager to move on, some things from this time period should stick around — and restaurant parklets are high on the list. We will be a stronger community when we have thriving businesses which create jobs and foster space for connection. There is plenty of parking in San Anselmo and the trade off here is a no-brainer to make our community one that draws customers, residents, and staff from all over the county.					
170	Barbara	Gamlen	gamlen@hotmail.com	Sausalito		Mar 24, 2022
171	Brooke	Cresalia	brookeebaily@gmail.com	Fairfax	CA	Mar 24, 2022
172	Ariana	Amini	arianaamini@yahoo.com	San Anselmo	CA	Mar 24, 2022
173	Sasha	Hurd	sashahurd@gmail.com	San Anselmo	CA	Mar 24, 2022
	We love the downtown parklets and how they've enriched our community!!! Please keep them! It adds so much to our town and sense of community!					
174	Erika	Peterson	erikatastrophe@gmail.com	Fairfax	CA	Mar 24, 2022
	Let's continue prioritizing people and community over cars!					
175	Grace	Angel	mgiangel77@gmail.com	San Anselmo	CA	Mar 24, 2022
	Parklets are wonderful addition to the town We are so lucky with California weather so let's keep outdoor dining open. Let's keep the Parklets please M					
176	Nicole	Crossley	ncharshaf@gmail.com	Fairfax	CA	Mar 24, 2022
177	Judy	King	judyaking@aol.com	San Anselmo	CA	Mar 24, 2022
178	Caroline	Hanssen	caroline.hanssen@gmail.com	San Anselmo	CA	Mar 24, 2022
179	Diane	Campbell	dianecampbell@hghistories.com	San Anselmo	California	Mar 24, 2022
180	Allison	Koehnen	koehnene@hawaii.edu	San Anselmo	California	Mar 24, 2022
181	CHRISTY	HINKELMAN	CHRISTINE_HINKELMAN@YAHOO.COM	SAN ANSELMO	MARIN	Mar 24, 2022
182	Ashley	Petersen	ashleyhpetersen@gmail.com	San Anselmo	CA	Mar 24, 2022
183	Cynthia	Bahmani	cynthia.bahmani@gmail.com	San Anselmo	California	Mar 24, 2022
184	Pia	Anderson	pia@gmail.com	San Anselmo		Mar 24, 2022
	We support Cucina and the parklets! We don't know what's ahead, in the near or long term. It only helps business and strengthens the community.					
185	Brian	Clahan	bacdrum@gmail.com	Tiburon	CA	Mar 24, 2022
186	Eugenia	Clahan	genaclahan@yahoo.com	Kentfield	Ca	Mar 24, 2022
187	Autumn	Matli	autumnmatli@gmail.com	Kentfield	CA	Mar 24, 2022
188	Bentley	Stewart	bentleystewart@gmail.com	San Anselmo		Mar 24, 2022
189	Megan	Hirschbein	mchirschbein@gmail.com	Greenbrae	CA	Mar 24, 2022
190	Amy	Goldman	draimster@gmail.com	Kentfield	CA	Mar 24, 2022
191	Carina	Hedrick	cmineni@gmail.com	GREENBRAE	CA	Mar 24, 2022
192	Stephanie	Roeder	stephanieroeder@gmail.com	Ross	California	Mar 24, 2022
	We are in full support of Cucina keeping their parklet. Cucina, their outdoor seating, and parklet make downtown San Anselmo charming!					
193	Mandy	Willian	mandy.willian@gmail.com	Kentfield	CA	Mar 24, 2022
194	Sarah	Kruttschnitt	sarahkruttschnitt@gmail.com	Ross	CA	Mar 24, 2022
195	Margo	Schein	meschein@comcast.net	San Anselmo		Mar 24, 2022
196	Allyson	Josephs	allysonjosephs@yahoo.com	San Anselmo	5	Mar 24, 2022
197	Amanda	Christoff	amanda.a.christoff@gmail.com	San Anselmo	CA	Mar 24, 2022
	Please keep parklets!					
198	Erin	Chamberlin	erinchamberlin@gmail.com	San Rafael	CA	Mar 24, 2022
199	Eric	Warner	ew1962@yahoo.com	San anselmo	California	Mar 24, 2022
	Keep the Parklets! They are good the town, the restaurant and the diners. I would rather eat outside all of the time.					
200	Linda	Jaquez-Fissori	millswomam@sbcglobal.net	San Anselmo	Marin	Mar 25, 2022
201	Sam	Jensen	jmatthews@ucla.edu	San Anselmo	CA	Mar 25, 2022
202	Erin	Schneider	schneids11@gmail.com	San Anselmo	California	Mar 25, 2022

Powered by GoPetition

#	First name	Last name	Email	City	State	Date
203	Jillian	Harwin	jillian.harwin@gmail.com	San Anselmo	CA	Mar 25, 2022
	These parklets have been a wonderful addition and a rare positive thing to come out of these challenging times. They should stay!					
204	Krista	Propst	klknable@gmail.com	San anselmo	California	Mar 25, 2022
205	Katae	Spillane	katecspillane@gmail.com	Fairfax	California	Mar 25, 2022
206	Paul	Spillane	paul@acumen-ih.com	Fairfax	Ca	Mar 25, 2022
207	Deborah	Cichocki	ni4film@mac.com	San Anselmo	CA	Mar 25, 2022
208	Gibson	k Gibson	gibson.tina.k@gmail.com	San Anselmo	CA	Mar 25, 2022
209	Kate	Housden	katerawlinson20@hotmail.com	San Anselmo	CA	Mar 25, 2022
210	Jeff	Hopkins	JLHOP@YAHOO.COM	SAN ANSELMO	CA	Mar 25, 2022
	The parklets are the best thing to happen to downtown San Anselmo. Before those were put in San Anselmo was a ghost town. Please don't remove them.					
211	Michelle	Sullivan	michellesully81@gmail.com	Sannandelno	CA	Mar 25, 2022
212	Jennifer	Johnston	jen1211@comcast.net	San Anselmo	Ca	Mar 25, 2022
213	Katherine	Siragusa	katsiragusa@gmail.com	San Anselmo	CA	Mar 25, 2022
214	Victoria	Pitt	vicks_baker@hotmail.com	San Anselmo		Mar 25, 2022
215	Patrick	Walsh	walsh_pjw+marin@protonmail.com	San Anselmo	CA	Mar 25, 2022
	Please keep the parklets in downtown San Anselmo!					
216	Erika	Merrell	erikamerrell@mac.com	San Anselmo	Ca	Mar 25, 2022
	Keep the parklets!!!					
217	Stephanie	Hassen	chapman_s@live.com	San Anselmo	CA	Mar 25, 2022
218	Eric	Rainbolt	es_rainbolt@yahoo.com	San Anselmo	California	Mar 25, 2022
219	Rebecca	Datke	rebeccadarke@hotmail.com	San Anselmo	CA	Mar 25, 2022
	These parklets have made this town! If Paris can do outdoor dining, so can we. Businesses make more money, the community enjoys Downtown even more. Everyone benefits.					
220	Stacy	Hart	stacyaquilino@gmail.com	San anselmo	Ca	Mar 25, 2022
	Keep the parklets					
221	Kate	Mccarthy	thefloralhabit@gmail.com	San Anselmo	CA	Mar 25, 2022
	I love the outdoor dining options and feel it not only offers the restaurants and cafes the opportunity to serve more customers but it creates community, improves atmosphere and attracts clientele from outside of town. Parking has not been affected in my opinion and in any case, (able) people should striving to walk or cycle into town. Removing them to create more parking spots seems bad for all - the environment, our health and the look of the town. The financial and cultural benefits of keeping them and reducing car traffic is more than enough reason for them to stay to me.					
222	Marilee	Shea	mcpadia@me.com	San Anselmo	CA	Mar 25, 2022
223	Marielle	Leon	mariellejleon@gmail.com	San Anselmo	CA	Mar 25, 2022
224	Bonnie	Barnish	bbarnish@hotmail.com	San Anselmo		Mar 25, 2022
	Keep the parlets!					
225	Jenny	Frank	Jenny@daffodildigital.com	San Anselmo	CA	Mar 25, 2022
226	Kim	Wilson	kim.labruna@gmail.com	Fairfax	CA	Mar 25, 2022
	Parklets are one of the best things to come out of the challenging times of the pandemic. The parklets create a welcoming and lively atmosphere in town that help all businesses.					
227	Ella	Kaminski	ella.b.kaminski@gmail.com	San Anselmo	CA	Mar 25, 2022
228	Liz	Kolcun	kolcunliz@gmail.com	San Anselmo	CA	Mar 25, 2022
	I support keeping the parklets.					
229	Holly	Zickler	hllyforsyth@yahoo.com	San Anselmo	California	Mar 25, 2022
230	Erin	Miwa	emmiwa@gmail.com	San Anselmo	Marin	Mar 25, 2022
231	Brooke	Peterosn	bsterlingpeterson@gmail.com	SAN ANSELMO	CA	Mar 25, 2022
	Parklets and Friday / Saturday street closures are the best thing to happen in the 25 years I have lived in San Anselmo. Love our town, love our community and dining outside has brought evenings from crickets to LIFE. KEEEEP the parklets!					
232	Kathy	Thornton	VOLUTO2@GMAIL.COM	San Anselmo	CA	Mar 25, 2022

Powered by GoPetition

#	First name	Last name	Email	City	State	Date
233	Pete	Giese	pdgiese@gmail.com	San Anselmo	CA	Mar 25, 2022
	San Anselmo's downtown has the extremely unique opportunity to be the most pedestrian and user friendly downtown retail, food and services downtown in all of Marin. The park lets have begun to highlight and enhance these unique attributes to the benefit of citizens and businesses alike. We while-heartedly and unequivocally support ALL of the parklets in downtown!					
234	Amanda	Craver	amanda.craver@gmail.com	San Anselmo	CA	Mar 25, 2022
235	Angela	Eddleman	helloitsae@gmail.com	San Anselmo	Ca	Mar 25, 2022
	Do not remove, pls.					
236	Elaine	Livengood	livengoodelaine@yahoo.com	San Rafael	CA	Mar 25, 2022
	Please keep the parklets					
237	Carin	Rhodes	haybrorhodes@gmail.com	San Anselmo	CA	Mar 25, 2022
238	Jennifer	Fitzgerald	esylivin@gmail.con	San Anselmo	CA	Mar 25, 2022
239	Suzy	Hyer	suzyhyer@gmail.com	San anselmo	Ca	Mar 25, 2022
240	Adriana	Broullon	adribroullon@gmail.com	Greenbrae	California	Mar 25, 2022
241	Katrina	Russek	krussek@comcast.net	San anselmo	Ca	Mar 25, 2022
	I support you Donna and other restaurants.					
242	Jennifer	Bastien	jennifer.bastien@gmail.com	San Anselmo	CA	Mar 25, 2022
243	Alex	Trabulsi	alexandratrabulsi@gmail.com	San Anselmo	California	Mar 25, 2022
244	Laliv	Hadar	lalivhadar@yahoo.com	San Anselmo	CA	Mar 25, 2022
	I LOVE the Cucina parklet! It's good for both consumers AND business! Why do away with it!???					
245	Jessica	Judge	lamondjf@gmail.com	San Anselmo	CA	Mar 25, 2022
	Keep the parklets!!					
246	Katherine	Bernheim	ktbern@gmail.com	San Anselmo	CA	Mar 26, 2022
	The best thing to come out of the pandemic is outdoor seating and a newly-thriving downtown. It was dead after dark for so many years.					
247	Amy	Blanchard	amy.blanchard@gmail.com	San Anselmo	CA	Mar 26, 2022
248	Teresa	McLean	teresamclean@hotmail.com	San Anselmo	California	Mar 26, 2022
249	Matt	Judge	matt@designjudge.co.uk	San Anselmo	CA	Mar 26, 2022
250	Raquel	Littleton-Nelson	calinelsons@gmail.com	SAN ANSELMO	CA	Mar 26, 2022
	Love the park let's downtown! Please keep them.					
251	Megan	Korn	mnmeyer7@gmail.com	San Anselmo	California	Mar 26, 2022
252	Jolie	Jacobs	joliejetset@hotmail.com	San Anselmo	CA	Mar 26, 2022
253	Dan	Freeman	mttamdan@gmail.com	San Anselmo	Marin	Mar 26, 2022
254	Caroline	Scharpf	cbburnett@gmail.com	San Anselmo	CA	Mar 26, 2022
255	Kelly	Brown	kbbrown415@gmail.com	San Anselmo	CA	Mar 26, 2022
256	Frank	Gomez	winkoptics2@gmail.com	San Anselmo	Ca	Mar 26, 2022
	The parklets are amazing for our town. We have a parking enforcement problem. Half the parking on San Anselmo avenue is taken by owners and employees since they do not enforce the parking.					
257	Scott	Tithof	tithofscott@gmail.com	Fairfax	CA	Mar 26, 2022
	Keep the parklet					
258	Patty	Kuehn	kuehnsf@hotmail.com	San anselmo	Ca	Mar 26, 2022
259	Anna	Frost	anna@LiveInMarin.com	San Anselmo	CA	Mar 26, 2022
	The restaurant parklets made San Anselmo feel alive during the quarantine and continue to do so. I have lived here for over 35 years and I don't remember downtown ever being this vibrant. I often drive there and have not had a problem finding a parking spot. Outdoor dining creates an atmosphere of conviviality and neighborhood that brings business and is of benefit to all. Please keep them.					
260	Liz	di Carpegna	dicarpegna@sbcglobal.net	SA	Ca	Mar 26, 2022
261	Lisa	Kemp	lkemp@tamdistrict.org	San Anselmo	california	Mar 26, 2022
	Keep the Parklet for Cucina					
262	Elise	Osner	gmalise@gmail.com	san anselmo	ca	Mar 26, 2022

Powered by GoPetition

#	First name	Last name	Email	City	State	Date
	parklets make cities and towns more walker freindly. It would be even better if they were in the SF method, with open seating					
263	Sarah	Zanoli	sarah.zanoli@gmail.com	San Anselmo	CA	Mar 26, 2022
264	Victoria	Canby	dembones@hotmail.com	San Anselmo	CA	Mar 26, 2022
265	Melissa	Luke	mluke1006@gmail.com	San Anselmo	CA	Mar 26, 2022
266	Stuart	Schwartz	Stuart@theimageflow.com	San Anselmo	CA	Mar 26, 2022
	The Parklets are a lively addition to the town, most of all the restaurants need them. Why would anyone want to take them away?					
267	Julie	Garner	juliebgarner@yahoo.com	Fairfax	CA	Mar 26, 2022
268	Martha	Joyce	marols@leapgroup.com	San anselmo	Ca	Mar 26, 2022
269	Haydee	K	haydeecon@hotmail.com	San Anselmo	Ca	Mar 27, 2022
	My family and I enjoy the parklet option. Please allow Cucina to keep it!					
270	Talitha	Hillman	talithahillman@yahoo.com	Mill Valley	CA	Mar 27, 2022
271	Shannon	Egan	shannone@tractionfactory.com	San Anselmo	CA	Mar 27, 2022
272	Anna	Barker	anna.barker@sbcglobal.net	Fairfax	CA	Mar 27, 2022
273	Deanna	Brock	deannabrock70@gmail.com	San Anselmo	California	Mar 27, 2022
	The parklets have really brought life back to our sleepy litte town. Would be a shame to see them good. Truly a silver-lining to the last 2 years.					
274	Carri	Mangelli	mangelli500@gmail.com	San Rafael	CA	Mar 27, 2022
	Keep it!!!					
275	GRETCHEN	APPLEN	gretchenapplen@gmail.com	San Anselmo	CA	Mar 27, 2022
	Please keep the parklets! They extend eating areas, help bring vibrancy to the downtown area, and are an enhancement to our town and community.					
276	Stefan	Cisneros	stefancisneros@hotmail.com	San Anselmo	California	Mar 27, 2022
277	sue	pearlstein	suepearlstein@statewideonline.com	Kentfield	CA	Mar 27, 2022
	I strongly suggest that parklets are kept. Too many unknowns in the Covid arena to take chances on having to be forced to eat indoors. I will always choose a place with outdoor seating over indoors. thank you					
278	Darin	Jackson	1stactionjackson@comcast.net	San Anselmo	Ca	Mar 27, 2022
279	Jennifer	Omholt	jen@writersweb.com	San Anselmo	CA	Mar 27, 2022
280	Jennifer	Anselmo	jennifer.anselmo@edelman.com	San Anselmo	CA	Mar 27, 2022
281	Edward	Korn	korn.ed@gmail.com	San Anselmo	California	Mar 28, 2022
282	Catherine	Hammond	kittyhammond63@gmail.com	San Anselmo	CA	Mar 28, 2022
283	Julian	Kwasneski	julian@noisenoise.com	Fairfax	CA	Mar 28, 2022
	Parklets are one of the few positives the pandemic gave us - let't not lose them!					
284	Craig	Weingart	craigweingart@gmail.com	Greenbrae		Mar 28, 2022
285	Tiffany	Scharpf	tiffanyscharpf@gmail.com	San rafael	Ca	Mar 28, 2022
286	Nina	Schuyler	ninaschuyler@gmail.com	San Anselmo	CA	Mar 28, 2022
	Though we may have moved into the endemic phase of Covid, many people are immunocompromised so they must remain careful. The only safe way to eat at a restaurant is outside. Allowing Cucina to have this option is thinking broadly, expansively for the whole community.					
287	Michael	Meagher	michaelmeagher333@yahoo.com	San Anselmo	California	Mar 28, 2022
288	Gridley	Johanna	jzgridley@gmail.com	San Anselmo	CA	Mar 29, 2022
289	Sarah	Hayes	sehayes58@gmail.com	Mill Valley	CA	Mar 29, 2022
	I grew up in San Anselmo. I love the resurgence it is having. Parking is important to people coming and enjoying the town. I care about San Anselmo, my father has a bench in his his honor in the City Hall area. Keep SA accessible - it is a wonderful place.					
290	Sutton	Trout	suttontrout@me.com	San Anselmo	CA	Mar 29, 2022
	Make parklets permanent!					
291	Talia	Rhodes	talia.seidman@gmail.com	San Anselmo	San Anselmo	Mar 29, 2022
292	Jaclyn	Ziccardi	jbarcewski@gmail.com	San Anselmo	Ca	Mar 29, 2022

Powered by GoPetition

#	First name	Last name	Email	City	State	Date
293	Courtney	Lillevand	clillevand@gmail.com	San Anselmo	CA	Mar 30, 2022
294	Sara	Love	sara.dawkins@yahoo.com	San Anselmo	Ca	Mar 30, 2022
295	Gregory	Love	gregorywlove@gmail.com	San Anselmo	CA	Mar 30, 2022
296	Jana	Kopyciok-Lande	janakopyciok@yahoo.de	San Anselmo	Marin	Mar 30, 2022
297	Nancy	Aurely	n_aurely@comcast.net	Fairfax	CA	Mar 30, 2022
298	Moritz	Steiner	moritz.steiner@gmail.com	San Anselmo	CA	Mar 30, 2022
299	Rafael	Aguirre-Sacasa	rafaelaguirresacasa@hotmail.com	San Anselmo	CA	Mar 30, 2022
	Keep the parklets and open container laws!					
300	Berit	Block	beritblock@hotmail.com	San anselmo	CA	Mar 30, 2022
	Please keep the parklets! One of the few gems that occurred during the pandemic.					
301	Meeghan	Buckley	meeghanbuckley@gmail.com	San Anselmo	CA	Mar 30, 2022
302	Matthew	Jacobs	matthewrjacobs@gmail.com	San Anselmo	California	Mar 30, 2022
303	Kat	Karpati	katkarpati@hotmail.com	San anselmo	California	Mar 30, 2022
304	Suellen	Lamorte	suellenlamorte@gmail.com	san anselmo	ca	Mar 30, 2022
305	Serena	Howeth	serenajo@gmail.com	San Anselmo	Ca	Mar 30, 2022
	Save the parklets- keep downtown alive!					
306	Danielle	Westberg	daniellewestberg@gmail.com	San Anselmo	Ca	Mar 30, 2022
307	Kristi	Pardini	kpardini3@gmail.com	San Anselmo	Ca	Mar 31, 2022
308	Jordan	Malin	jord_malin@hotmail.com	San Anselmo	CA	Mar 31, 2022
	Please keep the parklets so I can enjoy eating outdoors all year long with my loved ones. This past year we've eaten in the cold, the drizzle and sun.					
309	David	Finnane	davidfinnane@yahoo.com	San Anselmo	Ca	Mar 31, 2022
310	Christopher	Papi	cpapi16@gmail.com	San Anselmo	CA	Mar 31, 2022
311	Alyce	Piper	alycepiper@comcast.net	san anselmo	california	Mar 31, 2022
312	Darren	West	dwest1550@gmail.com	Sausalito	CA	Mar 31, 2022
	I really think these structures add to the ambience of the town.					
313	Mark	Anderson	maaquatics@aol.com	San Anselmo	CA	Mar 31, 2022
314	Amy	Flynn	amy@amyflynn.com	San Anselmo	CA	Mar 31, 2022
315	Allison	Hastings	littlelorien@gmail.com	San rafael	Ca	Apr 01, 2022
316	Cristine	Welisch	cwelisch1@gmail.com	San Rafael	CA	Apr 01, 2022
317	Shannon	Delahunty	superstroh@comcast.net	Woodacre	CA	Apr 01, 2022
	Keep the parklets and outdoor dining options and work to find solutions for other issues separately. Outdoor dining options vitalize the town!					
318	Michael	Golden	mg_design@comcast.net	San Anselmo	California	Apr 01, 2022
	Keep the parklets, they make the town more welcoming.					
319	Iain	Anderson	andersoniain@gmail.cm	San anselmo	Ca	Apr 01, 2022
320	Judy	Kaufman	judyek6@yahoo.com	San anselmo	Ca	Apr 01, 2022
	So need to keep San anselmo thriving and eateries outside attract people to our downtown. Been a San Anselmo retail business owner for 40 years at Amazing Grace Music.					
321	Misty	Gibbs	mistymgibbs@gmail.com	San Anselmo	CA	Apr 02, 2022
322	Terra	Chamberlin	sfchamberlin@comcast.net	San Anselmo	CA	Apr 02, 2022
	San Anselmo is finally "alive" after 6:00! It def has to do with the ability to eat outside.					
323	Lisa	Meagher	lisameagher@yahoo.com	San Anselmo	CA	Apr 02, 2022
	Cucina livens up San Anselmo in the evenings. Love the live music across from the restaurant in the summers! Since the parklets and the park near Creekside Pizza, the town is so much more fum.					
324	Alice	Self	amccraith@gmail.com	San Anselmo	CA	Apr 02, 2022
325	George	Bernier	53.cooper@gmail.com	Corte Madera	CA	Apr 02, 2022

Powered by GoPetition

#	First name	Last name	Email	City	State	Date
326	Sandy	Armstrong	sandyarmstrong@me.com	San Anselmo	CA	Apr 02, 2022
327	Lauren	Eichenbaum	laurenkthurston@gmail.com	San Anselmo	CA	Apr 02, 2022
328	Ashley	Eagle-Gibbs	aeaglegibbs@yahoo.com	Fairfax	CA	Apr 02, 2022
	Please keep the parlets.					
329	Dewi	Burton	dewiburton@gmail.com	San Anselmo	CA	Apr 02, 2022
330	Caitlin	Wu	caitlin.k.wu@gmail.com	San Rafael	CA	Apr 02, 2022
331	Ryan	Milhous	ryanmilhous@gmail.com	Fairfax	CA	Apr 02, 2022
332	Calley	Barton	calleymbarton@gmail.com	San Anselmo	California	Apr 02, 2022
	One of the main reasons we moved to San Anselmo in 2021 was due to the vibrancy of downtown and a huge portion of that comes from the parklets. Removing the parklets would push people wanting to eat outside to go somewhere outside of San Anselmo. We would be incredibly disappointed and saddened if the town removed the parklet which allow healthy dining for immunocompromised and brings more business for our town.					
333	Jackson	Forman	jacksoncforman@gmail.com	San Anselmo	CA	Apr 02, 2022
334	Nancy	Luckoff	nancyjill@gmail.com	Mill Valley	CA	Apr 02, 2022
335	monica	lee	monicaflute@gmail.com	san francisco	california	Apr 02, 2022
336	Jennifer	Lefferts	decimal_apps.0v@icloud.com	San Anselmo	Ca	Apr 02, 2022
337	William	Tabler	billtabler@yahoo.com	San Rafael	Ca	Apr 02, 2022
	Been a great addition to downtown and have seen so many people enjoying.					
338	Carlina	Bjork	carlina.bjork@comcast.net	WOODACRE	CA	Apr 02, 2022
339	Michele	Pfeifer	mpfeifer1155@gmail.com	Novato	CA	Apr 02, 2022
340	Suzanne	Gailey	suzylusion@gmail.com	Corte Madera	CA	Apr 02, 2022
341	Wendy	Robinow	robinowfamily@gmail.com	Corte Madera		Apr 02, 2022
342	Amandasue	Lynch	sueluvulots@gmail.com	Corte Madeira	California	Apr 02, 2022
343	Kelly	Brown	kelrobbrown@hotmail.com	San Anselmo	Ca	Apr 03, 2022
344	David	Macpherson	dcmlaw@pacbell.net	CORTE MADERA	CA	Apr 03, 2022
	We enjoy eating at Cucina and we believe that the parklet is good policy for at least another year.					
345	Barbara	Nazari	bbbabs25@hotmail.com	San Anselmo	CA	Apr 03, 2022
	I believe that only restaurants should be allowed to have parklets. Other downtown spaces could be loading zones for merchants and an employee parking should be restricted					
346	gina	logan	gbuon2@yahoo.com	San Anselmo	CA	Apr 03, 2022
	keep the parklets					
347	Rebecca	Evans	ryevans1@yahoo.com	San Anselmo	CA	Apr 03, 2022
	Keep the parklets !					
348	Jan	Wu	springer74@gmail.com	San Anselmo	CA	Apr 03, 2022
349	David	Cranmer	davidcranmer@gmail.com	San anselmo	California	Apr 03, 2022
350	Dodie	Baker	dodiebaker@yahoo.com	San Anselmo	ID	Apr 03, 2022
351	Denise	Bass	denisebass@yahoo.com	Sausalito	CA	Apr 03, 2022
352	Lynn	Wuthnow	jackwuthnow@yahoo.com	San anselmo	Ca	Apr 03, 2022
353	Lisa	Hilgers	lisahilgers@gmail.com	Fairfax	CA	Apr 03, 2022
	Please keep the park let! We love it!					
354	Jan	Oconnor	janoconnor415@gmail.com	Kentfield	Ca	Apr 03, 2022
355	Araceli	Santos	sirenaceli@yahoo.com	San Rafael	Ca	Apr 03, 2022
	We LOVE this parklet!! Please keep it ...					
356	Diana	Meyer	jdcameyer@yhoo.com	San Anselmo	Ca	Apr 03, 2022
	Keep the parklets! So important for business and general well being of the town. Also block the town from cars from Saturday Pm Thru Monday am					
357	Julie	Schwabenlender	julie.schwabenlender@yahoo.com	San Rafael	CA	Apr 03, 2022

Powered by GoPetition

#	First name	Last name	Email	City	State	Date
	Hi Donna! Best of luck! I'd love to come by for dinner soon, maybe with Ariel?! -Julie					
358	Charmian	Stewart	charmian@aol.com	San Anselmo	California	Apr 03, 2022
359	Todd	Tornga	ttornga@gmail.com	Ross	California	Apr 03, 2022
360	Peter	Redfield	hulaboy123@me.com	Ross	CA	Apr 03, 2022
361	Rebecca	Greenwald	drfoote@sbcglobal.net	San Anselmo	CA	Apr 03, 2022
362	Dan	Lovette	d_lovette@yahoo.com	San Rafael	CA	Apr 03, 2022
363	Steve	Vance	steve@fixitinc.biz	San Anselmo	Ca	Apr 03, 2022
364	MM	Tornga	mmshore@aol.com	Ross	CA	Apr 03, 2022
365	Allison	Broude Friedberg	allison.broude@gmail.com	Ross	CA	Apr 03, 2022
366	Nicole	Skerry	gooddoggies.skerry@gmail.com	San Francisco	Ca	Apr 03, 2022
367	Tricia	Horan	triciahoran@gmail.com	San Rafael	CA	Apr 03, 2022
368	ELIZABETH	ORENICH	eorenich@gmail.com	San Anselmo	CA	Apr 04, 2022
369	Kathy	Eagle	kaeagle@comcast.net	San Anselmo	CA	Apr 04, 2022
	I like outside seating it's charming and adds to the town. It's nice to see people out and about enjoying the town					
370	Paul	Hughes	paulgabehughes@gmail.com	Kentfield	CA	Apr 04, 2022
371	Karen	MacLean	karen@print2assist.com	San anselmo	Ca	Apr 04, 2022
372	Ariel	Krietzman	ariel.krietzman@gmail.com	San Francisco	CA	Apr 04, 2022
373	Judy and Gregg	Gibson	jmghome@comcast.net	San Anselmo	CA	Apr 04, 2022
374	Nicki	Silva	nickita@comcast.net	San Anselmo	CA	Apr 04, 2022
375	Kyle	Donaldson	kyle@eci-events.com	San Anselmo	CA	Apr 04, 2022
376	Monica	Schindler	dandmschindler@comcast.net	San Anselmo		Apr 04, 2022
377	Linda	Linda	lkmetz@comcast.net	Fairfax	CA	Apr 04, 2022
	These outdoor dining areas have been one of the few positive things that this CoVid pandemic has given to all of is					
378	Kevin	Hayes	haykev1@gmail.com	Novato	CA	Apr 04, 2022
379	Andrea	Lloyd	andreabenferlloyd@gmail.com	San Anselmo	CA	Apr 05, 2022
380	Christopher	Roeder	chris.roeder@am.jll.com	Ross	CA	Apr 05, 2022
381	Marilu	Fitzmaurice	marilu.fitz4@gmail.com	San Anselmo	CA	Apr 05, 2022
382	Andrea	Haberlein	aanndreaa@yahoo.com	Fairfax	Ca	Apr 06, 2022

Carla Kacmar

Parklets

From: Gretchen Richardson <gretchen@richardsonclark.com>
Sent: Thursday, April 14, 2022 2:20 PM
To: Town Council
Subject: Letter in support of San Anselmo's Parklets

Follow Up Flag: Follow up
Flag Status: Flagged

CAUTION: External Sender

Dear Town Council,

We are very much in support of making the parklets a permanent fixture in San Anselmo. These parklets not only encourage us to engage outdoors but they bring a new energy and vibrance to the downtown that otherwise might be more subdued and contained inside. These parklets draw us to the area's businesses and help current businesses thrive in these uncertain times.

Recently I met friends at Cucina and as we were sitting outside, we gazed around at the neighboring stores and reminded each other to shop locally. We each went to adjacent shops for candy, a Mother's Day present, wine and books. The more reason we're given to congregate downtown, the more reminders we have to shop locally.

The parklets enhance our sleepy town's vibrance and we are very much in favor of continuing them. If there are businesses in opposition I wonder if they could consider collaborating with neighboring parklets and finding a way to draw attention to their shops and offerings. We would be happy to help brainstorm if anyone is interested.

Please accept this letter in lieu of our attendance tonight as we will be at a funeral for a dear San Anselmoian.

Cheers,
Gretchen + Clark Richardson

Gretchen Richardson
Principal, Richardson Clark Design
San Francisco, CA
C: 415-595-3915
E: gretchen@richardsonclark.com

Carla Kacmar

Parklets

From: Dave Donery
Sent: Tuesday, April 12, 2022 3:02 PM
To: Carla Kacmar
Subject: FW: San Anselmo Parklets

Follow Up Flag: Follow up
Flag Status: Flagged

For the parklet item on 4/26

David P. Donery, Town Manager
Town of San Anselmo
525 San Anselmo Avenue.
San Anselmo, CA 94960
(415) 258-4652

From: Christopher Martin <zapwharf@comcast.net>
Sent: Tuesday, April 12, 2022 3:00 PM
To: Dave Donery <ddonery@townofsananselmo.org>
Subject: San Anselmo Parklets

CAUTION: External Sender

Dear David,

We weighed in on the parklet issue and mailed the a letter to the Mayor and each Councilmember as follows:

We understand that the San Anselmo Town Council will soon determine the long-term future of the parklets located in San Anselmo. We are in favor of continuing the parklets for at least three years or until the pandemic is fully extinguished. Since the outbreak of Covid-19, we have avoided eating inside restaurants. San Anselmo has a variety of restaurants that provide comfortable and safe alfresco dining.

Though we live in Ross, central San Anselmo is a five-minute walk from our home. For decades, we have frequented shops, cafes, and restaurants in San Anselmo. The parklets, and the outdoor dining they provide add to the charm and vitality of San Anselmo. The parklets bring life and activity to the town, which in time will help fill vacant storefronts.

When we dine in San Anselmo, we tend to shop the stores. When we drive, we never have difficulty finding a parking space. Without parklets, and the safe, outdoor experiences they provide, we would likely frequent other nearby towns that have them.

Please continue the parklet policy, which make San Anselmo a more lively, healthy and attractive place to visit.

Sincerely,

B.J. and Christopher Martin

Robyn Clifford

From: Laurie Berliner <madgeandmehats@gmail.com>
Sent: Tuesday, June 28, 2022 2:55 PM
To: Town Council
Subject: 6/28 Town Council Meeting - Agenda Item 5 Parklets

CAUTION: External Sender

Honorable Town Council Members,

I am a San Anselmo Avenue business owner writing to express my strong support for making parklets on San Anselmo Avenue a permanent feature in town. I am also asking that you simultaneously address the privatized dining area in the public park adjacent to Creekside Restaurant.

I have reviewed the staff report for tonight's meeting. Here are my thoughts and additional considerations:

I am in favor of:

1. The proposed paid parking, San Rafael to Tunstead, together with an agreement with CMPD to increase enforcement;

2. The elimination of free parking for electric vehicles in all of the town parking lots;

3. Opening up the lot behind Town Hall to public parking on weekdays from 4 pm on and all weekend;

4. A cap on the number of public parking spaces along San Anselmo Avenue, from Bolinas to San Rafael, that can be converted to parklets to no more than 6 spaces which effectively "grandfathers" in the existing parklets: Cucina (2); Marin Coffee Roasters (1); Kientz Hall (1); Hilda's (1); and Longway (1) and allows no additional parklets nor expansion of existing ones;

5. A fee scheduled modeled on the San Rafael ordinance, not Healdsburg's. I think it fair to require an initial, non-refundable application fee, but no per parking space fee in the first year since that amount cannot yet be determined until after a year following the installation of metered parking on the Avenue. It is only after at least 1 year that a per/space fee can be determined;

6. Permit the installation of roofs to existing parklets which are designed for year-round use (as was permitted in Fairfax); and

7. Allow the use of gas heaters, as contrasted with the Fairfax parklet ordinance recently passed there.

Regulate/Require Fees for the Use of the Public Park Adjacent Creekside Restaurant

I feel very strongly that Council needs to decide *concurrent* with this parklet ordinance, rules and a fee schedule for use of the public park by Creekside Restaurant. Currently that restaurant has 11 QR-code dining tables in the public park and their diners often in addition use the public picnic tables. Effectively this is a complete takeover of a public park by a single restaurant. The cleanliness of the picnic tables, the vibe of the space, the availability of the public picnic tables all of this is impacted by the restaurant's free use of the public space. I don't think it is fair to allow that to continue while regulating all the other restaurants using public parking spaces. Furthermore, regulation of Creekside's public space dining is distinguishable from Cucina's use of the bridge insofar as Cucina's use is only a partial, nighttime use of a thoroughfare as compared to a public park. On top of this I object to publicly employed town staff cleaning up an area

impacted by a single private business. That isn't the case with the use of the bridge by Cucina. At a minimum a fee schedule and maintenance agreement should be required for the current status of Creekside dining in the public park to continue. Perhaps Council should consider a scaling back?

In closing I want to emphasize how much parklets are a benefit to a small boutique business like mine. Eyeballs on my business after my business hours has lead to new customers coming to my shop later when I am open. I see parklets as a net plus for my business and an enjoyable way to dine on the avenue.

Thank you for your consideration of these thoughts and ideas.

/Laurie Berliner
Madge & Me Hats
506 San Anselmo Avenue
San Anselmo, CA 94960
+1 415-497-5244
www.madgeandme.com
www.instagram.com/madgeandmehats

Robyn Clifford

From: Barbara Nazari <barbarahuntnazari@gmail.com>
Sent: Tuesday, June 28, 2022 2:27 PM
To: Town Council
Subject: Parklets

CAUTION: External Sender

Council & Staff,

I work at a downtown retailer and I am downtown resident and support keeping the existing restaurant parklets. I do recognize the concerns of other retailers in regards to parking, however, and hope that some changes can be made in conjunction with the parklet project.

From the perch of my office above San Anselmo Ave, I see parking mini-dramas unfolding daily. I have seen everything from downtown office workers and employees switching side-by-side spots every 2 hours to local business owners rubbing chalk off their tires, endless u-turns at the Tunstead intersection to grab a coveted spot and even a commercial repair van driver repeatedly parking in the loading zone to go to a yoga class! I can admit to occasionally committing some of these small infractions myself, except of course the loading zone yoga thing. I definitely believe in karma too much for that!

There has always been a parking problem downtown, but I think with a few changes in enforcement, the impact of the parklets can be minimized.

In my fantasy world, I would
1) Make all parking on San Anselmo Ave limited to 20 minutes. Park there if you need to go buy dog food or wine or pick up a gift or go to the dentist or grab a book from the library or a cup of coffee,etc.
2) Keep Creek Park and the lots 4 hour metered for longer visits, such as lunch at a restaurant parklet or a haircut or a yoga class, meeting at the building department, etc.
3) Create an employee parking lot. The town can and should be able to negotiate with private property owners to make this happen- US Bank lot?
You're welcome.

A note on future parklets: Please insure that parklet permits are granted only to businesses that have the correct license to serve on-premise food or alcohol. I am in full support of the Town's decision to allow consumers to enjoy open container alcohol on the closed streets and public parks, but I feel strongly that all businesses should be held in compliance of their strict ABC and Health Department licensure, as leasing parklet space from the town is essentially an extension of the footprint of the business.

Thank you for listening.
Best Regards,
Barbara Nazari

Robyn Clifford

From: Laura Wellman <wellmancolors@gmail.com>
Sent: Tuesday, June 28, 2022 1:31 PM
To: Town Council
Subject: Keep Parklets in San Anselmo

CAUTION: External Sender

Dear Folks,

I believe the city should keep the parklets, as they provide the outdoor seating many prefer...I know that takes away parking spaces but think the trade-off is worth it.

Thanks,
Laura

Laura Wellman
Eleven To Win
707-616-4619
wellmancolors@gmail.com

Robyn Clifford

From: mkmirsky@gmail.com
Sent: Tuesday, June 28, 2022 1:15 PM
To: Town Council
Subject: Re: Parklets in San Anselmo

CAUTION: External Sender

Correcting agregis typo below! My apology !!

On Tue, Jun 28, 2022 at 1:12 PM <mkmirsky@gmail.com> wrote:
Dear town council,

I would like to contribute my thoughts on the future of parklets to your discussion and decision making.

For some context, I do have friends who have businesses with parklets. I know they have invested considerably in them. I like the aesthetics of more people sitting and dining outside along the Avenue.

However —

1. I believe it is important that those merchants on the Avenue who do not serve food or drink, be heard on this matter. Limited parking may be a real issue for them and I am not sure the impact that less parking has on these businesses has been fully considerd?

2. From an aesthetic perspective, the more recent proliferation of parklets is beginning to concern me. Do we want the street to be walled off by multiple parklets? The recent addition of the Kintz parklet, in particular feels like too much for the small Avenue. What about allowing Kintz, Hilda's, LONGWAY and Woods Brewing to have parklets on the backside of their buildings? Close that to through traffic?

3. With the wonderful new creek side park, imagination park, and the public space at city hall, there is ample space for people to take food to go from the restaurants, and dine outside. Perhaps more tables would encourage more outdoor dining which would help local restaurants.

4. "Parking Reserved for Pick Up" .. this is only exasperating the parking hurdles and likely isn't helping the local restaurants that much.

5. Future of creek side park — the park is working! This open space, has been the best thing to happen to downtown san Anselmo in years. I urge the powers that be to consider this in any future plans for that space. Leave it open, easy to access and with plenty of seating. It has become a source of community.

Kevin Mirsky

--
Kevin Mirsky
(415) 419-4785
www.TheSingleFinTheory.com
@the_single_fin_ theory
--

Kevin Mirsky
(415) 419-4785
www.TheSingleFinTheory.com
@the_single_fin_ theory

Robyn Clifford

From: Elise Calanchini <mirskyfive@gmail.com>
Sent: Tuesday, June 28, 2022 11:39 AM
To: Town Council
Subject: Parklets in San Anselmo

CAUTION: External Sender

Hello.

I am writing in regards to the Parklets in town. The Parklets have been a lovely addition and served a purpose during Covid times, for the merchants and customers. But, the Parklets are also a detriment to merchants that are not restaurants and cafes, as they have taken up much needed parking in our small town; on any given day it is extremely difficult to find a parking spot to do a simple quick errand, which keeps business away from these shops. There are also parking spots designated (sanctioned or not by the city) for "pick up only" of certain restaurants and cafes, to add to the problem!

My feeling is that if Creekside Park is thoughtfully planned and reconstructed to invite all to get take out from local eateries and sit in the park to enjoy, this will address the needs and desires of outdoor dining in town, free up parking and ease congestion in town.

I can see a few Parklets left on the main road, but how does one choose? Some, Keintz Hall for instance, already had outdoor seating on the sidewalk and open air seating on their rooftop, but very recently took up more necessary parking with a Parklet; not something I agree with.

There are many options to explore, but I do feel that there are too many Parklets and the frustrations around and lack of parking is a big problem!

I appreciate your time and efforts.

Thank you, Elise Calanchini

Robyn Clifford

From: Judy Barrera <jhbchinabound@gmail.com>
Sent: Tuesday, June 28, 2022 11:26 AM
To: Town Council
Subject: Keep the Parklets

CAUTION: External Sender

Dear Town Council,
Please keep the parklets! These are the best thing to come out of covid.

My husband and I have long wondered why Marin County restaurants didn't have much outdoor seating when we have amazing weather up here. We have both traveled quite a bit and noticed many places had outdoor seating. This creates a cafe culture, which promotes a sense of community. People hang out more, walk around and visit businesses more, and meet with friends more often as well. I have never seen our downtown so lively!

When Covid hit, people in San Anselmo were cut off from their social lives and our businesses. Our restaurants struggled to stay open by offering take out, but that wasn't enough. Parklets saved them and introduced people to the pleasure of eating outside under the sun and stars. Now it is a way of life for all of us and we cannot take that away. There are still many people who do not feel safe eating indoors. Parklets give them a way to be social and safe. Most people we know, including us, specifically request outdoor seating when they go out to eat because it is more enjoyable.

I know some people complain that the parklets take up parking spaces and that there isn't enough parking downtown. Lack of parking has always been an issue in San Anselmo. I grew up here and remember business owners and others constantly complaining about parking That is a problem the town council can deal with at a later time. Do not let anyone use that excuse get rid of our parklets.

Covid upended our world and forced us to improvise and change. Some of those changes, such as walkable streets and parklets, were positive and are now considered normal. Please do not cater to a small minority of our town who do not want the parklets and want things to be the "way they were." We need these parklets.

Sincerely,
Judy Barrera

Robyn Clifford

From: Gloria Wolff <gehyai@gmail.com>
Sent: Tuesday, June 28, 2022 11:08 AM
To: Town Council
Subject: Keep Parklets in San Anselmo

CAUTION: External Sender

Hello and happy summer!

Just writing to let you know how much we love and support the parklets. In all honesty, due to Covid, we do not eat indoors and the only reason we eat at the downtown restaurants is due to the parklets. Along with our friends, we have dined outdoors at the parklets quite a bit and have brought much needed business to the restaurants. We also love the vibe and sense of community it has brought downtown. We are in support of the parklets and would love to keep them!

Thank you for all you do!
Gloria Wolff

Robyn Clifford

From: Anne Calanchini <millerini@comcast.net>
Sent: Tuesday, June 28, 2022 11:05 AM
To: Town Council
Subject: Against more parklets

CAUTION: External Sender

Hello San Anselmo Town Council Members,

I am a San Anselmo resident and am writing to you to voice my opposition to the current number of parklets, and to the addition of any future parklets.

The parklets made a lot of sense during the height of the pandemic, allowing restaurants to stay in business and giving people a safe place to gather.
I love the idea of outdoor dining and the community connection that it brings, but when everything is considered, now that we are through the pandemic shut down, the parklets don't seem reasonable or fair.

Downtown is open and busy again, and the decreased parking is noticeable. It is also trickier to navigate the busy stretch of San Anselmo Ave, the parklets cause some visual and physical obstruction, and with the pedestrians and bikers, there is a lot going on in a short few blocks. Some of the nearby businesses are also visually and physically hindered by the parklets.

I've heard directly from 2 merchants that their businesses have been hurt by the decreased parking, I imagine there are several more merchants who have
also felt a negative impact. One merchant told me that they have been told by the Council that the residents love the parklets. Has the Council heard
from enough residents to be able to assume that the majority are in favor of the parklets? I know many people who find the decreased parking and need to navigate the parklets very frustrating, and who sympathize with merchants who are hurt by these changes, but most of us were unaware of the possibility of even more parklets.
Some months ago I got the notice that the parklets were on the agenda for an upcoming Town Council meeting, I wrongly assumed the discussion was going to be about whether or not to keep the existing ones. I had no idea that the town was considering more, and was truly confused and surprised when Kientz began to build theirs (especially considering their very large indoor space, rooftop deck and existing sidewalk tables).

Several restaurants that already had outdoor dining space now also have parklets. One business with a parklet is not a restaurant at all. I heard that the annual fee for the parklets is very minimal, if that is so, the town is giving some business owners the great advantage of additional real estate at almost no annual cost, while simultaneously hurting some of the other downtown businesses. That is not right or fair.

I love our downtown, I shop and dine at many of the businesses, and I want success and equal opportunity for all of them. Please give very careful and fair consideration to all aspects of the parklets, and make sure that you have reached and heard from the majority of the citizens.

Thank you,

Anne Calanchini

Robyn Clifford

From: Jedel Benson-Glasner <jedelbenson@ucla.edu>
Sent: Tuesday, June 28, 2022 11:02 AM
To: Town Council
Subject: Keep Parklets in San Anselmo

CAUTION: External Sender

Please keep the parklets open in San Anselmo! The parklets are safe spaces for those who feel more comfortable dining outside and help keep business thriving! Thanks for your consideration.

Robyn Clifford

From: Cameron Hinshaw <cameron@mfifty.com>
Sent: Tuesday, June 28, 2022 11:00 AM
To: Town Council
Subject: Outdoor parklets

CAUTION: External Sender

Dear Town Council;
I am sending this email as a shout out for all of those restaurants/cafes that have had the good fortune (during a trying time) to be allowed additional outdoor spaces. These spaces really need to be perminant.

As a frequent diner at our local restaurants, I love the fact that we have more seating options for those of us who want the option to sit outside rather than in an enclosed space.

These outdoor spaces have also brought a true vibrancy to our sleepy little town – something that is desperately needed for the restaurateurs and the shop owners, alike.

We live in such a beautiful place, removing these parklets would be a true shame.

Please vote to keep them in place.

Thank you.
C. Hinshaw
415-517-5005

Robyn Clifford

From: Jeremy Rhodes <jeremyerhodes@gmail.com>
Sent: Tuesday, June 28, 2022 10:57 AM
To: Town Council
Subject: Keep Parklets in San Anselmo

CAUTION: External Sender

We live in San Anselmo (18 Summit Rd) and we LOVE the parklets. Please keep them.

Thank you,
Jeremy & Talia Rhodes

Robyn Clifford

From: Joseph Donner <donjj1@me.com>
Sent: Tuesday, June 28, 2022 10:42 AM
To: Town Council
Subject: Keep Parklets in San Anselmo

CAUTION: External Sender

I think this is unnecessary and overkill.
I don't think it adds to the overall enjoyment of the outdoor street closure and bottlenecks the traffic pattern during non closure times.

Sent from my iPhone

Robyn Clifford

From: Adam Speert <adspeert@gmail.com>
Sent: Tuesday, June 28, 2022 9:02 AM
To: Town Council
Subject: Keep Parklets in San Anselmo

CAUTION: External Sender

Hi,

I saw that there was deliberation on parklets and wanted to voice my strong support for them to stay. They very much enrich the town and the outdoor communal energy they promote is special.

My family eats at Hilda's nearly every Sat morning and we were just commenting on how the new parklet at Kientz Hall makes the downtown view seem nicer.

Please let them stay.

Thanks!
Adam Speert

108 Hillside Avenue

Robyn Clifford

From: John Finley <jgfinley123@gmail.com>
Sent: Tuesday, June 28, 2022 10:01 AM
To: Town Council
Subject: Keep Parklets in San Anselmo

CAUTION: External Sender

Council members,
I am a supporter of keeping parklets in town. Please don't force businesses to remove them.

Kind regards,
John Finley
2 Olive Ave, San Anselmo, CA 94960
--
Sent from Gmail Mobile

Robyn Clifford

From: Sheryl <sherylsmith727@gmail.com>
Sent: Tuesday, June 28, 2022 9:58 AM
To: Town Council
Subject: Parklets

CAUTION: External Sender

Please vote to keep the parklets - it is such a nice addition to our town.

Thanks you.

Robyn Clifford

From: Caressa Condo <condo_c2002@yahoo.com>
Sent: Tuesday, June 28, 2022 9:36 AM
To: Town Council
Subject: Keep Parklets in San Anselmo

CAUTION: External Sender

To whom it may concern,

As a member of our vibrant San Anselmo community, I petition our town council that our San Anselmo businesses be permitted to keep their parklets.

Best,

Caressa Condo-Huston

Sent from my iPhone

Robyn Clifford

From: Kari Chao <karichao@me.com>
Sent: Tuesday, June 28, 2022 9:17 AM
To: Town Council
Subject: Keep Parklets in San Anselmo

CAUTION: External Sender

Hello San Anselmo town council members,

We're Fairfax residents but are writing in support of specifically Kientz Hall's parklet - and really all the parklets that have been built in San Anselmo and Fairfax over the past two+ years. The increase in outdoor dining has made eating out so much more enjoyable. It's the primary way that we as a family have been supporting local businesses over the pandemic - and hopefully will be able to continue to do so.

Please keep the parklets!

Thank you,
Kari and Chin Chao
700 Bolinas Road, Fairfax

Robyn Clifford

From: Janis Chan <janisdee1@gmail.com>
Sent: Tuesday, June 28, 2022 8:42 AM
To: Town Council
Subject: Keep Parklets in San Anselmo

CAUTION: External Sender

To the council:

"Parklets" - the fenced in seating areas in front of cafes and restaurants - are the best additions to the town that I can remember (and I've lived here a long time!). They're not only comfy and convenient, they increase the attractiveness of the street tremendously and draw more people into the business area, especially at night. We've finally discovered something Europeans have always known: the delight of spending more of our lives outdoors. I strongly urge you to allow parklets to remain on a permanent basis.

Best wishes,
Janis Chan
janisdee1@gmail.com

Virus-free. www.avast.com

Robyn Clifford

From: Carrie Peters <carrie@abclicensecompany.com>
Sent: Tuesday, June 28, 2022 8:15 AM
To: Town Council
Cc: Kientz Hall
Subject: Keep Parklets in San Anselmo

CAUTION: External Sender

To: Town Council - City of SAN ANSELMO:

I am writing on behalf of Kientz Hall and in support of their parklet. I am a resident/home owner in San Rafael and have enjoyed many a lovely evening at Kientz Hall both upstairs and in their parklet.

Further, I am a consultant for over 25 years with regard to the alcoholic beverage licenses. The Governor instituted "temporary" outdoor dining during the COVID pandemic and that is still in effect and will continue to be in effect up until a year after he rescinds it (which he is NOT PLANNING to do anytime soon). This is a STATE-WIDE relief measure to help restaurants accommodate the public demand for safe outdoor dining space. Once that relief measure goes away, a licensee, like Kientz Hall, will have the opportunity to make that outdoor space permanent and I hope they do. We are all safer with outdoor dining spaces. The more we can accommodate the public's need for this, the better.

I also find that parklets even slow traffic down, which I feel is also needed everywhere and especially in San Anselmo.

I do hope you vote to keep Kientz Hall's parklet approved. It would be keeping with the State of California, it would be keeping with support of restaurants and it would be keeping with your support of public health and safety. LEAVE RESTAURANTS ALONE!

Thank you for reading. I am happy to answer any questions you have about this as my firm has had to become experts on outdoor space during COVID times.

Respectfully,

Carrie A. Peters
Founder, Fixer, CEO
ABC License Company
(510) 788-5881 ext. 1
337 17th Street, Suite 101
Oakland, CA 94612
Follow us on IG

Robyn Clifford

From: George Parker <ledoff@comcast.net>
Sent: Tuesday, June 28, 2022 8:00 AM
To: Town Council
Subject: Keep Parklets in San Anselmo

CAUTION: External Sender

Dear Town Council of San Anselmo,
Please keep all the parklets in San Anselmo. They have been a necessity during these difficult times. If it wasn't for the parklets and outdoor seating, most of these restaurants would not have survived. My partner and I frequently dine out to support the restaurants and feel comfortable doing so because of the parklets and outdoor dining options. We are residents of San Anselmo and support all businesses. Being a small business owner myself, I know how difficult the last 2+ years have.
Getting rid of the parklets would definitely have an impact on the restaurants. So please do the customers who frequent these business a favor and keep the parklets.

Thank you,
Mr. George L . Parker Jr.
Salon G
Salongsola@gmail.com
Salong.glossgenius.com

Robyn Clifford

From: ginahawk@comcast.net
Sent: Tuesday, June 28, 2022 7:46 AM
To: Town Council
Subject: Keep Parklets in San Anselmo

CAUTION: External Sender

Good morning!

For all of the pain, hardship, and negativity that Covid has placed upon all of us, I do feel that Parklets have been the silver lining! They have allowed our restaurants to survive and have brought an amazing sense of 'old-fashioned community' back to our precious town.

Please, let's keep that sense going forward. I urge you to keep our new community feel!

Gina Hawk
84 Oak Knoll Ave
San Anselmo
ginahawk@comcast.net
Cell 415.497.4967

Sent from my iPhone

Robyn Clifford

From: John Maas <john.maas.90@gmail.com>
Sent: Tuesday, June 28, 2022 7:44 AM
To: Town Council
Subject: Keep Parklets in San Anselmo

CAUTION: External Sender

Hi, we are local residents. We aren't able to attend the meeting tonight to speak in person however we strongly support making the parklets a permanent fixture downtown. We urge the council to also vote to keep them in place long term. We have been enjoying the flexibility and additional outdoor seating options at a lot of local restaurants and cafes and we think they are great options also for our children to have a space to eat outdoors. Additionally they help create a more pleasant street environment with more space for pedestrians to congregate and what's not to love about a more activated downtown area. Please support the parklets.

John Maas
San Anselmo

Robyn Clifford

From: Alyce Piper <alycepiper@comcast.net>
Sent: Tuesday, June 28, 2022 7:37 AM
To: Town Council
Subject: Keep Parklets in San Anselmo

CAUTION: External Sender

Please consider keeping the parklet's for our restaurants. It has give San Anselmo a little boost in activity and wonderful outdoor dining which was non existent before - and, I've lived in San Anselmo for 38 years! Live On The Avenue is a great add too this year!! Well done!

Alyce Piper

Robyn Clifford

From: Suzanne Trainor <thetrainors1@me.com>
Sent: Tuesday, June 28, 2022 7:35 AM
To: Town Council
Subject: Thank you! and Please Keep Parklets :)

CAUTION: External Sender

Good Morning,

Thank you for the "Live on the Avenue" summer series! We hope you will continue your support for community connection and our local businesses by maintaining access to the new outdoor dining venues too.

We understand that some of the local retailers are concerned about lost parking, but we believe that the increased visibility (from street side diners) and extra foot traffic — both which contribute to the reinvigoration of our downtown — will FAR offset the loss of 8 (?) downtown parking spaces. (Staying open a little later on the weekends would be a great strategy too!)

My husband and I both grew up in San Anselmo in the 60s and 70s. We are elated to see our wonderful town alive again! Thank you!

Suzanne and Brian Trainor
San Anselmo, CA

Robyn Clifford

From: Jess Bocci <jessicambocci@gmail.com>
Sent: Tuesday, June 28, 2022 6:36 AM
To: Town Council
Subject: Keep Parklets in San Anselmo

CAUTION: External Sender

Hi Town council team,

I am voting and proposing we KEEP the parklets in San Anselmo. These outdoor spaces are what people want to dine in! Please keep them. It helps create more safe environments for families to eat at.

Best,
Jess

Robyn Clifford

From: Joe Kastner <jkastner@gmail.com>
Sent: Tuesday, June 28, 2022 6:26 AM
To: Town Council
Subject: Keep Parklets in San Anselmo

CAUTION: External Sender

Parklets were one bright spot that came out of the pandemic. Let's make then permanent! Thanks.

Joe Kastner

Robyn Clifford

From: karrie hovey <karriehovey@gmail.com>
Sent: Tuesday, June 28, 2022 3:11 AM
To: Town Council
Subject: Keep Parklets in San Anselmo

CAUTION: External Sender

Please keep the parklets. It is so nice to be able to enjoy dining outside.
We will be living with mutating variants for quite sometime. The parklets give those of us unwilling to dine in public inside an option.
I often ride my bike from Fairfax to San Anselmo and I feel more confident in locking up my bike if I can see it.
Thanks - Karrie Hovey
--
Be well - Karrie

www.karriehovey.com

Robyn Clifford

From: Cherie visconti <cherie@bayareabirthworks.com>
Sent: Tuesday, June 28, 2022 1:39 AM
To: Town Council
Subject: Keep Parklets in San Anselmo

CAUTION: External Sender

I implore you to keep the Parklets! Our town finally has a night life and with our mild weather and heat lamps we are out all year !

Please keep the one good thing that has come out of Covid !

Cherie visconti

Sent from my iPhone

Robyn Clifford

From: Jill Feldon LaNouette <jilanouette@gmail.com>
Sent: Wednesday, June 29, 2022 9:21 PM
To: Town Council
Subject: Keep Parklets in San Anselmo

CAUTION: External Sender

Please keep the parklets. We love them. Thanks!

Jill Feldon LaNouette
73 Bella Vista Avenue
San Anselmo, CA 94960

iPhone message, sorry about any typos

Robyn Clifford

From: PATTI COCCIOLO <patti_cocciolo@me.com>
Sent: Tuesday, June 28, 2022 4:16 PM
To: Town Council
Subject: Keep Parklets in San Anselmo

CAUTION: External Sender

Please keep the wonderful parklets in San Anselmo! The community feel, the accessibility for those not ready to be inside, the "small town square" vibe that happens all along the avenue - whether the streets are closed or not - these benefits have changed our town for the better.

Yes, a few parking spaces are gone, but with the lots behind buildings on both sides of the Avenue, the spots available on the sections of the Avenue without parklets, street parking across a bridge on SFD, the parking available in neighborhoods, and so much foot traffic from folks who live close enough to walk, I have to say, we live too far to walk, and we've never not found a spot. Something is always available. The benefits to our community, to its vibrancy, to the survival of all the businesses (more folks coming to town, more folks shopping and discovering spaces other than restaurants) are huge.

As a San Anselmo resident of 10 years, the recent moves on the avenue - concerts on both ends, closed streets during the summer, block parties, shop and restaurant owners who care as much about our town as they do their profits, the energy that happens with outdoor seating along the avenue with the parklets - these community building efforts have been the single best set of improvements I've seen.

Well done - keep it going!!

Warmly,

Patti Cocciolo, Oak Avenue

Robyn Clifford

From: David Howey <david.howey@downtownstorage.biz>
Sent: Tuesday, June 28, 2022 6:05 PM
To: Town Council
Subject: Parklets

CAUTION: External Sender

Good Evening, I'm against the parklets because of the following questions/ issues:

1. For this to work, I think the town would need to enforce parking like Mill Valley's parking enforcement. Does San Anselmo even enforce the parking?
2. Why can't coffee shops near the town park use the town park? It seems to work just fine for Creekside Pizza and Tap Room.
3. Will there be a permit process?
4. Will social distancing be enforced?
5. What will keep the companies from utilizing cheap /low-rent signage (Vinyl Banners)?
6. Shouldn't they be paying the town rent if they are using town property?
7. How do you plan to replace the parking spaces that you have lost? Would you give up the parking lot behind City Hall?

Thanks,

David Howey
Downtown Storage LLC.
P.O. Box 647
Corte Madera, Ca. 94976
415-302-8738

Robyn Clifford

From: Ann Politzer <annpolitzer@gmail.com>
Sent: Tuesday, June 28, 2022 5:54 PM
To: Town Council
Cc: Dave Donery; Sean Condry; Planning
Subject: Correction Re: Parklets--Council Agenda Item #5, 6/28/22

CAUTION: External Sender

The line in my email on the parklets and impacted parking should read, "ACCESIBLE parking has been eaten up by parklets." Thank you!

On Jun 28, 2022, at 4:34 PM, Ann Politzer <annpolitzer@gmail.com> wrote:

Available parking has been eaten up by parklets. F

Robyn Clifford

From: Todd Brockman <toddjbrockman@gmail.com>
Sent: Tuesday, June 28, 2022 5:52 PM
To: Town Council
Subject: Keep Parklets in San Anselmo

CAUTION: External Sender

Please keep the Parklets in San Anselmo. We need to keep the great community of San Anselmo as a walking, dining, and gathering town.

Thank you.

Best,
TB
Mobile: 415-250-1379

Robyn Clifford

From: Pilar Fernandez Maas <ptmaas@mac.com>
Sent: Tuesday, June 28, 2022 5:35 PM
To: Town Council
Subject: Are the Parklets in San Anselmo Necessary?

CAUTION: External Sender

Dear Town Council,

Today I learned of tonight's town council meeting and that parklets are on the agenda. In reviewing all of the studies, petitions, and comments regarding them I'm surprised that so many like them and don't feel that parking is an issue. Had I been asked I would have answered that San Anselmo has too many parklets and that parking has become more challenging.

I find that during the day the parklets are not full and the valuable parking spots are. I'm not suggesting that all of the parklets should be removed, but a few do seem unnecessarily large and maybe shouldn't be there at all. My suggestion is to remove the ones that don't have full capacity during the day and leave the ones that do. We should also not make any long term commitments to the parklets.

I understand that it's important to listen to the residents, not only because I'm one, but because it's their town. I also feel that it's very important to listen to the merchants. To see that the polling shows an even split among the merchants we should base all decisions on that. Without merchants we won't have a town. It's difficult enough to be a small business owner and to give customers a reason to shop at a brick and mortar vs at their screens in the comfort of their homes. Not being able to park is a deterrent to shopping in town.

My suggestion is to remove a few of the parklets, do not make a commitment to them and don't add any to an already congested street.

Kindly,
Pilar Maas

Robyn Clifford

From: JEANETTE CLING <jcling10@gmail.com>
Sent: Tuesday, June 28, 2022 8:22 AM
To: Town Council
Subject: parklets

CAUTION: External Sender

I wanted to take a moment and voice my opinion about the parklets. This is the greatest thing our town has done to create an inviting atmosphere downtown to draw consumers to downtown. If you go to downtown fairfax, san rafael, larkspur, Mill Valley - they all have people enjoying their downtown well into the evening. San Anselmo is dead and asleep by 7:00 pm. The parklets are drawing people in a positive way, to downtown san anselmo.

KEEP THE PARKLETS

--
Jeanette Cling, Realtor
Global Luxury Specialist
International President's Elite Award | C 415.706.2430
Coldwell Banker | 511 Sir Francis Drake Blvd., Greenbrae, CA 94904
DRE 01484036 | jcling@cbnorcal.com | www.jeanettecling.com

Robyn Clifford

From: paul walker <spectrus38@hotmail.com>
Sent: Tuesday, June 28, 2022 10:36 PM
To: Town Council
Subject: Keep Parklets in San Anselmo

CAUTION: External Sender

please keep them!
very important!
-pw

Robyn Clifford

From: Jen Callewaert <jencallewaert@gmail.com>
Sent: Tuesday, June 28, 2022 10:08 PM
To: Town Council
Cc: Cory Callewaert
Subject: Keep Parklets in San Anselmo

CAUTION: External Sender

Dear Council,

We live in San Anselmo past Yolanda station and we LOVE the outdoor seating and parklets downtown! Please consider keeping them permanently. We will not miss the parking and will ride bikes, scooter or walk! Thank you for keeping our community safe, happy, and supporting new ideas and planning!!

Ps. We LOVE the summer street closures too...wish it was year round!

Thanks!
Jen Callewaert
Canyon rd, San anselmo

525 San Anselmo Avenue
San Anselmo, CA 94960

Town of San Anselmo

Staff Report

TO: Town Council 6/28/2022 **Item #:** 6.

FROM:
Linda Meneses Kenton, Assistant Town Manager and Town Librarian

SUBJECT:
Report to the Town Council Summarizing the Work of the Racial Equity Ad Hoc Committee

RECOMMENDATION

1. That the Town Council receive an oral report summarizing the work of the Racial Equity ad hoc committee.

2. That the Town Council establish the Racial Equity committee as a standing committee by adopting the attached Resolution. (Attachment 2)

3. That the Council approves funding for the diversity, equity and inclusion audit of the Town's policies and procedures.

BACKGROUND

The Town Council issued a statement on Tuesday, June 9, 2020, in support of the movement known as "Black Lives Matter." Town Council officially joined in the national protest of the killing of George Floyd and urged all residents of San Anselmo to continue to work to be honest about and rectify our country's history of racial injustice. In recognition of this pledge, the Town Council formed a Racial Equity ad hoc committee to examine issues of racial equity, social justice, systemic racial bias, and diversity in the Town at its November 10, 2020, meeting (Resolution 4363 attached hereto as Attachment 1).

The goals and objectives of the committee were as follows:

1. Charge: The charge of the Racial Equity Ad Hoc committee was to examine issues of racial equity, social justice, systemic racial bias, and diversity in the town and make recommendations to the Town Council on how to best address identified issues.

2. Purpose: The purpose of the committee was to ensure that the Town, its rules, policies, ordinances and staff are free of implicit biases. The committee was also to explore additional opportunities to examine and/or address issues of racial equity, social justice, systemic racial bias, and diversity in the town and develop strategies and tactics to ensure that the Town's rules, policies and laws are fair, equitably enforced and free of biases of any kind.

3. Goals and Objectives: The committee had three primary goals:

    a. Conduct an audit of the Town's rules, policies, ordinances and other areas to be sure that they are fair, equitable and free of biases of any kind.
    b. Explore options and implement anti-bias or other appropriate training for staff.
    c. Explore additional opportunities to examine and/or address racial equity, social justice, systemic racial bias, and diversity issues that are within the Town's control.

4. Term: This committee was to serve for an initial one-year term following the seating of the full committee. Upon completion of the initial term, the committee would submit a report summarizing outcomes of the committee's efforts, along with a recommendation regarding continuing the committee's work, to the Town Council.

The committee was seated in late winter of 2021 and held its first meeting in May 2021.

DISCUSSION

Racial Equity Ad Hoc Committee Work

In accordance with the mandate of the committee, Committee Chair, Tiffany McElroy will present an oral report summarizing the work of the committee over the past year.

Proposed Racial Equity Committee

In recognition of the progress of the Racial Equity ad hoc committee and the need for continued work on these critical issues, staff recommends establishing a standing Racial Equity Committee, and recommends the following guidelines for service for the committee:

1. Name: Racial Equity Committee

2. Mission Statement: To identify, expose, and recommend ways to overturn far-reaching and long-standing systemic and structural racist policies, behaviors and decision making in the Town of San Anselmo and our community. The committee will strive to achieve social justice, racial equity, and inclusion by partnering with our community as well as other organizations to actively eliminate inequities, welcome many perspectives, and create a safe and inclusive town that works for everyone. The committee will educate and activate individuals and organizations to invest in interrupting racism, bias, bigotry, and prejudice as a shared responsibility to increase the success for all groups.

3. Charge: The charge of the Racial Equity Committee is to examine issues of racial equity, social justice, systemic racial bias, and diversity in the Town and to make recommendations to the Town Council related to addressing the identified issues.

4. Purpose: The purpose of the committee is to identify and address implicit biases in the Town's rules, policies, ordinances and employment practices. The committee will also explore additional opportunities to examine and/or address issues of racial equity, social justice, systemic racial bias, and diversity in the Town and develop strategies and tactics to ensure that the Town's rules, policies and laws are fair, equitably enforced and free of biases of any kind.

5. Organization:

a. Up to seven (7) volunteer community members, plus youth member(s), may be appointed through the process outlined below. Membership qualifications include residing or working in, attending school in, or owning a business or property in San Anselmo. The committee will include two (2) Councilmembers, with up to two (2) designated Town staff liaisons in a support/advisory capacity only.

b. The Committee will meet on a regular basis, as is determined by the Chairperson, who will be elected by the Committee members.

c. Members are expected to attend all meetings, unless prevented from doing so by a substantial reason. In the case of an absence, members shall endeavor to notify the Chairperson at least twenty-four (24) hours in advance of a meeting. Automatic removal will occur if more than three consecutive regular meetings are missed, or more than four regular meetings in six months are missed, without prior notice and substantial reason.

d. Members should show respect for each other and engage in the following:

• Demonstrate a commitment to racial and social justice, with passion and energy to motivate others;

• Possess knowledge of equity and race issues, with analytical skills for systems thinking;

• Collaborate in working across differences and organizing for collective results;

• Provide leadership experiences and the ability to be a visible and vocal champion for equity;

• Utilize communication skills to be a liaison and ambassador with a variety of audiences;

• Creatively think outside the box to craft forward-thinking, innovative strategies;

• Develop facilitation and training skills to engage in conversations about race;

• Demonstrate humility and curiosity to continually learn and engage in self-reflection;

• Build relationships, internally and externally, that can be leveraged to expand engagement;

• Engage in deep, challenging, and long-term work.

e. All new candidates will be interviewed and appointed by the Town Council, with existing ad hoc committee members being placed on the standing committee with staggered terms

of 1.5 and 3 years.

6. Terms: Members will serve three (3) year terms, provided that the first members appointed shall serve a differing number of term lengths to accomplish a staggering of the appointment schedule so that no more than one-half of the seats shall expire in any one year.

7. Brown Act: All meetings of the Committee shall be conducted in accordance with the requirements of the Ralph M. Brown Act.

Town Policies and Procedures DEI Audit

A goal of the Racial Equity ad hoc committee was to assist with an audit of the Town's rules, policies, ordinances and other areas to be sure that they are fair, equitable and free of biases of any kind. This work requires specific expertise outside the capability of the committee and Town staff.

An extensive RFP was released in the fall of 2021 to ten firms specializing in DEI consulting work and auditing. Two firms responded, The Justice Collective and ReadySet. The bids came in at a much higher-than-expected amount. Staff asked the two firms to reduce the scope of their proposals by refocusing on the policy and procedures audit and by eliminating the housing element and staff training components. Both The Justice Collective and ReadySet responded with scaled-back proposals according to direction from staff. The two firms presented to the Racial Equity ad hoc committee at their April meeting. Committee members asked questions, considered the proposals and ultimately made a recommendation in favor of ReadySet at a cost of $69,000. Both proposals are viewable at <https://www.townofsananselmo.org/1453/Racial-Equity-Ad-Hoc-Committee>
.
Upon approval, the audit can be scheduled to begin early in FY 2022-23.

FISCAL IMPACT

$69,000 for an audit of the Town's rules, policies, ordinances and other areas to be sure that they are fair, equitable and free of biases of any kind. Funding for this service was included in the Town's FY2022-23 budget.

CEQA AND CLIMATE ACTION PLAN CONSISTENCY

The Council's discussion of this item and potential adoption of the attached resolution creating a standing Racial Equity subcommittee is not a "project" under the California Environmental Quality Act, because it does not involve an activity which has the potential to cause a direct or reasonably foreseeable indirect physical change in the environment. (Cal. Pub. Res. Code § 21065).

CONCLUSION

The Racial Equity ad hoc Committee has been serving the Town and Town Council for the past year. The Committee Chair's narrative showed the accomplishments, challenges and expectations moving forward. Furthermore, the Committee desires and hopes Town Council establishes it as a standing committee of the Town. Finally, as the DEI audit was part of the committee's original charge from Town Council, the funds to achieve this objective have been included in the Town's FY2022-23 budget for affirmation from Council.

RESOLUTION NO.

A RESOLUTION OF THE TOWN COUNCIL OF THE TOWN OF SAN ANSELMO FORMING THE RACIAL EQUITY AD HOC COMMITTEE

WHEREAS, on Tuesday, June 9, 2020, the Town Council issued a statement in support the movement currently known as "Black Lives Matter" and officially joining in the national protest of the killing of George Floyd, and urging all citizens of San Anselmo to continue to work to be honest about and rectify our country's history of racial injustice, and

WHEREAS, in recognition of this pledge, the Town Council desires to form an ad hoc committee to examine issues of racial equity, social justice, systemic racial bias, and diversity in the Town; and

NOW, THEREFORE, BE IT HEREBY RESOLVED, that the Town Council establishes the goals and objectives of the committee as follows:

1. Name: Racial Equity Ad Hoc Committee

2. Charge: The charge of the Racial Equity Ad Hoc Committee is to examine issues of racial equity, social justice, systemic racial bias, and diversity in Town and to make recommendations to the Town Council on how to best advance equity in all Town departments and operationalize equitable polices, programs and procedures within Town government.

3. Purpose: The purpose of the committee is to ensure that Town policies, programs, procedures and laws are not racist, are free of implicit biases, and that laws are fair and equitably enforced. The committee will also explore additional opportunities to build awareness, solutions and leadership for racial equity, social justice, systemic racial bias, and diversity for Town staff and the wider community.

4. Goals and Objectives: With the goal of building an inclusive, vibrant and equitable community the committee will:

    a. Conduct an audit of the Town's policies, programs, procedures and laws to be sure that they are fair, equitable and free of biases of any kind.
    b. Explore options and implement anti-bias, racial equity and other appropriate training for staff.
    c. Explore additional opportunities to improve Town government policies, practices and programs to address racial equity, social justice, systemic racial bias, and diversity issues.

5. Organization:

   Up to seven (7) volunteer community members, appointment process outlined below. Membership qualifications include residing or working in, or owning a business or property in San Anselmo. The committee will include two (2) Councilmembers, with two (2) designated Town staff liaisons (Assistant Town Manager and Planning Director) in a support/advisory capacity only.

6. Committee Appointments: Seats on the committee will be chosen as follows:

   a. The community seats on the committee will be advertised in the local media, on the Town website and in the Town newsletter and to local employers.
   b. All candidates will be initially interviewed by the Ad Hoc Committee's Town Council liaisons.
   c. The Council liaisons will establish a list of up to ten (10) candidates to be interviewed and appointed to the committee by the Town Council.

7. Term: The committee members will serve for an initial one-year term following the seating of the full committee. Upon completion of the initial term, the committee will submit a report summarizing outcomes of the committee's efforts, along with a recommendation regarding the continuation the committee's work, to the Town Council.

8. Brown Act: All meetings of the Commission shall be held in compliance with the Brown Act.

I hereby certify that the foregoing Resolution was duly passed and adopted at a regular meeting of the San Anselmo Town Council on the 10th day of November, 2020 by the following vote, to wit:

AYES:

NOES:

ABSENT:

ABSTAIN:

_____

Ford Greene, Mayor

ATTEST:

_____

Carla Kacmar, Town Clerk

RESOLUTION NO.

A RESOLUTION OF THE TOWN COUNCIL OF THE TOWN OF SAN ANSELMO ESTABLISHING THE RACIAL EQUITY COMMITTEE

WHEREAS, on Tuesday, June 9, 2020, the Town Council issued a statement in support the movement currently known as "Black Lives Matter" and officially joining in the national protest of the killing of George Floyd, and urging all residents of San Anselmo to continue to work to be honest about and rectify our country's history of racial injustice; and

WHEREAS, the Town of San Anselmo proclaims that it is committed to diversity, equity, and an atmosphere of inclusiveness and it respects the dignity of every person without regard to race, sex, religion, ancestry, national origin, immigration status, marital status, age, disability, sexual orientation, gender identity, or political affiliation. The Town denounces all hate and discrimination in any form; and

WHEREAS, in recognition of this pledge, the Town Council formed a temporary ad hoc committee on November 10, 2020, to examine issues of racial equity, social justice, systemic racial bias, and diversity in the Town; and

WHEREAS, the Town Council directed the ad hoc committee to submit a report summarizing outcomes of the committee's efforts, along with a recommendation regarding continuing the committee's work, to the Town Council; and

WHEREAS, the ad hoc committee presented its report to the Town Council at its meeting of June 28, 2022.

NOW, THEREFORE, BE IT HEREBY RESOLVED that the Town Council, in recognition of the progress of the Racial Equity ad hoc committee and the need for continued work on these important issues, establishes the Racial Equity committee as a standing committee of the Town as follows:

1. Name: Racial Equity Committee

2. Mission Statement:

   To identify, expose, and recommend ways to overturn far-reaching and long-standing systemic and structural racist policies, behaviors and decision making in the Town of San Anselmo and our community. We will achieve social justice, racial equity, and inclusion by partnering with our community as well as other organizations to actively eliminate inequities, welcome many perspectives, and create a safe and inclusive town that works for everyone. We will educate and

activate individuals and organizations to invest in interrupting racism, bias, bigotry, and prejudice as a shared responsibility to increase the success for all groups.

3. Charge: The charge of the Racial Equity committee is to examine issues of racial equity, social justice, systemic racial bias, and diversity in the Town and to make recommendations to the Town Council related to addressing the identified issues.

4. Purpose: The purpose of the committee is to identify and address implicit biases in the Town's rules, policies, ordinances and employment practices. The committee will also explore additional opportunities to examine and/or address issues of racial equity, social justice, systemic racial bias, and diversity in the Town and develop strategies and tactics to ensure that the Town's rules, policies and laws are fair, equitably enforced and free of biases of any kind.

5. Organization:

   a. Up to seven (7) volunteer community members, plus youth member(s), may be appointed through the process outlined below. Membership qualifications include residing or working in, attending school in, or owning a business or property in San Anselmo. The committee will include two (2) Councilmembers, with up to two (2) designated Town staff liaisons in a support/advisory capacity only.
   b. The Committee will meet on a regular basis, as is determined by the Chairperson, who will be elected by the Committee members.
   c. Members are expected to attend all meetings, unless prevented from doing so by a substantial reason. In the case of an absence, members shall endeavor to notify the Chairperson at least twenty-four (24) hours in advance of a meeting. Automatic removal will occur if more than three consecutive regular meetings are missed, or more than four regular meetings in six months are missed, without prior notice and substantial reason.
   d. Members should show respect for each other and engage in the following:
      • Demonstrate a commitment to racial and social justice, with passion and energy to motivate others;
      • Possess knowledge of equity and race issues, with analytical skills for systems thinking;
      • Collaborate in working across differences and organizing for collective results;
      • Provide leadership experiences and the ability to be a visible and vocal champion for equity;
      • Utilize communication skills to be a liaison and ambassador with a variety of audiences;
      • Creatively think outside the box to craft forward-thinking, innovative strategies;

• Develop facilitation and training skills to engage in conversations about race;
• Demonstrate humility and curiosity to continually learn and engage in self-reflection;
• Build relationships, internally and externally, that can be leveraged to expand engagement;
• Engage in deep, challenging, and long-term work.

e. All Candidates will be interviewed and appointed by the Town Council.

6. Terms: Members will serve three (3) year terms, provided that the first members appointed shall serve a differing number of term lengths to accomplish a staggering of the appointment schedule so that no more than one-half of the seats shall expire in any one year.

7. Brown Act: All meetings of the Committee shall be conducted in accordance with the requirements of the Ralph M. Brown Act.

I hereby certify that the foregoing Resolution was duly passed and adopted at a regular meeting of the San Anselmo Town Council on the 28th of June, 2022, by the following vote, to wit:

AYES:

NOES:

ABSENT:

ABSTAIN:

_____
Alexis Fineman, Mayor

ATTEST:

_____
Carla Kacmar, Town Clerk

DEI Audit of Town Policies and Procedures
RFP released to the following firms:

	DEI Services Consultants	Website	Submitted Proposal?	Cost
1	CEIPDX—Center for Equity and Inclusion	https://ceipdx.com/	no	
2	Common Health Action	https://commonhealthaction.org/	no	
3	Conducere Consultants	https://www.conducereconsultants.com/	no	
4	DTUI	https://dtui.com/	no	
5	Empress Rules Equity Consulting	https://www.empressrules.net/	no	
6	The Justice Collective	https://www.thejusticecollective.org/	yes	$307,650
7	Kenley Group	https://kenleygroup.com/	no	
8	PGN Consulting	https://www.pgnconsulting.org	no	
9	Racing to Equity	https://www.racingtoequity.org/	no	
10	ReadySet	https://www.thereadyset.co/	yes	$240,624

DEI Audit of Town Policies and Procedures
Revised Proposals:

	DEI Services Consultants	Website	Submitted Proposal?	Cost
1	The Justice Collective	https://www.thejusticecollective.org/	yes	$129,000
2	ReadySet	https://www.thereadyset.co/	yes	$69,000

Timeline for DEI Audit of Town Policies and Procedures

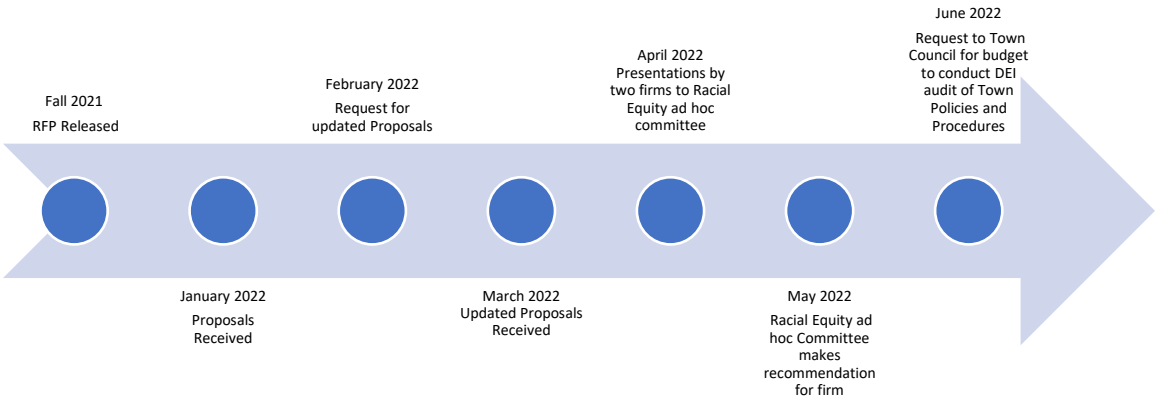

S://Racial Equity Committee/RFP/Firm Submissions list

READYSET

Request For Proposal (RFP)

for

The Town of San Anselmo

Due By: ***November 5, 2021***

Updated: March 2, 2022

Contact Information *Email preferred for contact* **Contact Person:** Y-vonne Hutchinson, CEO	**E-mail Address:** inbound@thereadyset.co **HQ Address:** 4505 S. Slauson Ave #205 Los Angeles, CA 90230 **Mailing Address**: 548 Market St. PMB 98302 San Francisco, CA 94104

Table of Contents

SUMMARY **3**

ABOUT US **3**

Who is ReadySet? 3

Why ReadySet? 4

Our Human-Centered Values 4

Our High-Touch, Data-Driven Approach 5

Experience with Local, Regional, and National Governments 6

Our Deep Expertise and Relevant Qualifications 6

READYSET APPROACH TO ENGAGEMENT **7**

Overview of Our Plan 7

Our Strategic DEI Approach: Proposed Budget and Timeline 9

Ongoing Support and Advising 11

Project Management and Support 11

NEXT STEPS **11**

SUMMARY

The Town of San Anselmo (the Town) is seeking proposals from qualified professional consultants to provide diversity, equity, and inclusion (DEI) consulting services. The Town intends to select a consulting partner to lead DEI auditing and training activities as key components in implementing a comprehensive DEI Program. This document constitutes a proposal by ReadySet in response to The Town's *Request for Proposal - Racial Equity Audit and Training*, as a firm who can take the lead in the design, development, and implementation of these initiatives.

ABOUT US

Who is ReadySet?

ReadySet is a Black Woman-owned DEI strategy, consulting, and training professional services firm that specializes in integrating and embedding DEI strategies and practices within innovative organizations. Founded in 2015, ReadySet has helped over 100 organizations to date in developing a high-impact approach to diversity, equity, and inclusion. Our clients span industries from tech to city governments and nonprofits; from small startups to social change organizations; and from local to regional to large multinational global entities. We bring a holistic and intersectional approach utilizing field-tested best practices and a strong emphasis on data-driven solutions that is intrinsic to our team's deep experience in both academia and the field.

Our work can be separated into the following areas of expertise:

- Assessment and Data Analytics: We offer a bird's eye view of every organization. Our assessment strategies include data and document reviews, focus groups, one-on-one interviews, and surveys to better understand equity, inclusion, and diversity needs.
- Metrics, Benchmarking, and Impact Assessments: We help our clients develop targeted goals and monitor the success of their DEI programs and initiatives - much like a DEI scorecard.
- Talent Strategy: We assist teams in developing and implementing custom approaches to recruiting, retention, and professional development through a business-informed DEI lens that feels organic and woven into company processes. We work with leaders to understand what organizational and cultural dynamics may get in the way of attracting,

retaining, and promoting team members from underrepresented groups and invigorate employees about their access to opportunity.

- Process and Policy Design: We design custom processes to create inclusive work practices and cultures. We review, revamp and create elements such as employee handbooks, company policies, and inclusive principles for functional practice.
- Learning and Development: We equip employees, managers, team members, and leaders with tools to foster belonging across the organization through our workshops, trainings, and coaching services.
- Executive and Individual Staff Coaching: We help strengthen the capacity of leaders and front-line managers to build and manage diverse and inclusive teams. We also work with individual contributors and members to build professional capabilities and DEI capacity.
- Communication Support: From web copy to public events, we help companies effectively communicate internally and externally about their DEI values, goals, and programming.
- Change Management: We support individuals, managers, and executives with the tools necessary to successfully and sustainably make the programmatic and cultural changes necessary to become more diverse and inclusive.
- Ongoing Consulting and Advisory Services: These services can help embed DEI practices in company practices and processes.

Why ReadySet?

Our Human-Centered Values

One of the core beliefs that we hold at ReadySet is that no social justice work can be done well without applying the principles and outcomes we aim to achieve — including diversity, equity, and inclusion — to the methods by which we do them. More simply said, the “how” matters just as much as the “what.”

Our “how” comes to life in the way that we continuously seek to minimize harm, take an intersectional lens to the work, and center people first — especially those with minoritized identities — every step of the way. This way of doing our work and creating meaningful impact for our clients endures because of the foundation in human-centered values that motivate everyone at ReadySet. They are:

- *Empathy:* The DEI journey is deeply personal, and oftentimes charged in the work context. We focus on the humans we are in conversation with and acknowledge shared experiences, knowing the only way through is together.

- *Growth Mindset:* The DEI journey can also mean looking at uncomfortable truths. We encourage our clients to learn from these challenges and choose a different course of action forward.
- *Enthusiasm:* DEI work is iterative and takes time and intention to do well. There is rarely a quick fix, so you need something meaningful to keep you going. For all of us at ReadySet, this work is our calling.
- *Creativity:* Our rigorous, data-focused approach, our holistic and integrated design, and our high-touch, personalized process create the right conditions for creative thought partnership.
- *Integrity:* Every organization is different, and every solution is unique.

Our High-Touch, Data-Driven Approach

While no one has perfected how to apply DEI principles to better support organizations in a comprehensive manner, we strive for better organizational practices through:

- Emphasis on Data – ReadySet loves data. To ensure we drive successful initiatives that are targeted, context-specific and high impact, we ground our work in data collected and analyzed during the initial assessment process – from partnering to build or update an organization-wide survey, to researching best practices, to one-on-one discussions with staff – and use this information to develop a baseline to benchmark our initiatives in the long term. By emphasizing data from the beginning of the engagement, and translating insights into specific actions that can be taken daily, we move our clients from *what sounds good* to *what works*.

  We start our assessment process for each engagement by reviewing existing documents and materials to accelerate our understanding of the organization. If recent survey data is not readily available, we collaborate with stakeholders to tailor a survey to touch on key topics or look outside the organization for evidence-based best practices, and potentially even user testing. Our team of people scientists analyzes the data across demographic groups with an intersectional lens for interesting insights and areas of impact, which then helps us discover gaps and patterns to further investigate.

  We value the stories and voices of the people who make your organization run. During the qualitative phase of the assessment, we talk to members of the community across the organization, from managers and individual contributors, across departments, and teams to get a rich and deep understanding of root causes. This allows us to formulate an impactful and effective strategy that focuses on both easy wins and long-term growth areas.

- Tailored and Integrated Design – Taking into account the multi-state context of the Town, we know a check-the-box solution or generic audit approach won't work. To scale quickly,

once we have done the initial data gathering, the next step will be to dive into strategic problem-solving work sessions with designated Town staff to dig into the "why" of DEI focused questions, and then translate this understanding into a framework for the Town's stakeholders. Ultimately, this approach lays the foundation for sustainable organizational change.

- Participatory and Consultative Approach – ReadySet believes that a participatory, consultative approach, which emphasizes collective buy-in, is most conducive for the successful implementation of DEI work. We anticipate including a core group of designated Town staff at every stage of the engagement: data-gathering and assessment, strategic working sessions, and recommendations development, to ensure institutional knowledge from the ground up. Since key stakeholders have understood each step of the journey, they know the "why" behind decisions and are able to continue to evolve the work long after the engagement ends.

- Adaptive Learning Methods to Build Capacity – Our pedagogical approach utilizes a range of different types of learning. We provide varying ways to learn and engage with materials presented during any training, including written materials, presentations, and interactive exercises. In customized training, we build individuals' capacity through highly interactive and experiential learning. We encourage open dialogue and group discussion. We bring a heavy emphasis on the practical application of strategies and tools participants can immediately implement to foster growth outside of the workshop setting.

Experience with Local, Regional, and National Governments

We recognize and respect the Town's desire to partner with a firm possessing experience with local and regional governments. Our portfolio of clients currently includes a variety of public sector serving and public facing mission focused government organizations including the Town of Los Gatos, California; California State Assembly; San Francisco Public Utilities Commission; and United States Forest Service. Furthermore, our team is composed of numerous consultants with government focused professional and academic qualifications.

Our Deep Expertise and Relevant Qualifications

Our team is diverse, and our approach intersectional, grounded in varied academic and business disciplines. Our seasoned network of consultants is composed of professionals with decades of experience organizing around DEI as well as in the areas of talent strategy, learning and development, and organizational change. Our incredibly diverse team includes a multitude of intersecting identities and backgrounds; over half are women-identified, over half are People of Color, and more than a third are LGBTQ+.

While CEO, Y-Vonne Hutchinson and COO, Rachel Marcuse will oversee the project as needed, consultants and subject matter experts who may likely be part of this engagement include:

Christopher Riddick, Ed.D. - Dr. Riddick has over ten years of experience in the management consulting industry, focused primarily on people practices, organizational development, and change management in the public sector. Chris received both his Bachelor of Arts in Public Policy Analysis and Master of Public Administration from the University of North Carolina at Chapel Hill. He also holds a Master of Science in Education degree from Indiana University. He completed his Doctor of Education in Organizational Change and Leadership from the University of Southern California's Rossier School of Education where his dissertation focused on barriers to racial and ethnic staff diversity in nonprofit organizations.

Jennifer Bustamante, Ph.D. - Dr. Bustamante holds both an M.A. and a Ph.D. in Social-Organizational Psychology from Columbia University. As a People Scientist and consulting leader with decades of experience planning, developing, and executing DEI initiatives, she has developed data-driven strategic initiatives for clients in varied industries. She is a fluent, bilingual (English/Spanish) strategist effective at analyzing and synthesizing data to identify cultural challenges and develop tailored and targeted solutions. Prior to ReadySet, she served as a Talent and Organization Consulting Manager at Accenture where she designed and implemented organizational enhancements for numerous organizations.

(Please note that final staffing decisions will be made during the contracting phase of the engagement should ReadySet be awarded. Additional advisory or subject matter expertise will be pulled from the rest of the ReadySet team as the project requires. Detailed Team Bios can be found on our team webpage.)

READYSET APPROACH TO ENGAGEMENT

Overview of Our Plan

Why this work matters: The Town is committed to institutionalizing DEI into its organizational practices through creating and implementing DEI policies that benefit both its internal and external stakeholders. If the lens of DEI is not successfully applied and integrated into the Town's policies, practices, and procedures the Town runs the risk of not achieving the outcomes of this important initiative.

The major outcomes and endpoints for this engagement are outlined in the following proposed activities (note that these are sample dates and will be confirmed and finalized at contracting):

Organizational Assessment + DEI Audit *(July - October 2022 or approximately four months)*

1. Perform a "current state" assessment of the Town's culture in conjunction with designated Town staff with an emphasis on auditing and understanding the Town's DEI practices and competencies: This phase will include:
    - A review and analysis of existing data, including demographic and service data. A DEI sentiment survey may be conducted, in partnership with a third party survey platform, to provide supplemental information in the DEI Audit;
    - Conducting 1:1 interviews and leading focus groups with key stakeholders as identified by the Town's staff;
    - A review of all pertinent organizational policies and documents with a lens towards the Town's DEI current state..

At the conclusion of the assessment phase, ReadySet will deliver a Summary Report Out (Findings and Recommendations), guided by the information gleaned in the "current state" assessment and existing data analysis. In this Report Out, our team will present insights and findings including areas of strength and areas of opportunity for growth. It will also include strategic recommendations and opportunities for tracking and communicating progress. We will also present recommendations for additional data to inform the Town's DEI goals.

Our Strategic DEI Approach: Proposed Budget and Timeline

The estimated completion dates and budget for the proposed activities are as follows. Please note that these dates and prices will be finalized as part of scoping and contracting conversations - this is only a sample schedule.

The anticipated start date is in July 2022. Additional details regarding our projected timeline are provided below. Prices reflect our government discount.

Organizational Assessment and DEI Audit
(July - October 2022)

We will conduct an Organizational Assessment and DEI Audit to achieve a deep understanding of the Town's current cultural context, leadership vision, and specific needs. The data collected during the audit will validate current risk areas and identify any potential additional gaps. From that point, we will provide a baseline from which to measure success, as well as incorporating community perceptions and fluency around DEI.

Scope	Work Process
Goal: To gain a current state understanding of the Town's DEI climate and organizational policies and processes as related to DEI. **Activities will include:** ● Kick Off to Community Presentation: ReadySet can conduct a kick off presentation to the community in order to explain and align around the assessment and build rapport with the staff. ● Stakeholder Engagement: ReadySet will conduct independent interviews, and focus groups, to obtain additional feedback and provide a qualitative assessment of DEI with the Town's staff members and elected officials. ● Internal and External Policy Review; Internal Equity Evaluation: The internal equity audit includes a review of existing documents regarding program information and evaluation, surveys, human resource policies and procedures, marketing materials, the Town's website and online presence, and other pertinent documents to develop a more comprehensive understanding of the organizational climate in relation to the Town's DEI goals. ● Data Analysis: ReadySet will review and interpret available demographic and service data for the Town in relation to the	Kick Off to Community (30 mins) Data review and analysis (2-4 weeks) 10 1:1 stakeholder interviews and up to 3 focus groups; aiming to talk to a representative sample of the Town's staff, elected officials, Committees, Commissions, citizens, and civic partners (6-8 weeks) Internal and External Policy Review; Internal Equity Evaluation (3-4 weeks) Analysis and synthesis of all quantitative and qualitative

Town's workforce and the communities they serve. If the need arises, we will also partner with the Town and a third party survey vendor to conduct a supplemental DEI sentiment survey. *(This supplemental survey is not currently included in the scope.)* ● Findings, Recommendations and Presentation: The data collected will be analyzed to ascertain alignment with best practices, target focus areas and assign priorities/next steps. It will also be used to develop: ○ Learning and Development Plan: Following a review of the Town's DEI audit, determine what areas need culturally competent trainings and employee engagement. ● Project Management Support: Support for the assessment phase includes, but is not limited to: project planning, activity coordination and management, meeting logistics and participation.	data sources at completion of assessment (4-6 weeks) Findings and Recommendations Presentation; L&D Plan (4-6 weeks from assessment completion) 3hrs/month of ongoing project management support for length of phase **Deliverables for this Phase** ● High Level Project Plan for entire engagement ● Data analysis of demographic data and services provided ● Data visualization (graphs) and insights for Findings Document ● Findings and Recommendations Presentation Deck ● 90-minute report out to designated staff ● DEI Capability Building and Training Plan
Total:	**$69,575**

Ongoing Support and Advising

As the work to improve, build, and embed best practices and programming related to DEI into the Town continues, we are available to support leadership and staff in its implementation through ongoing coaching and/or consulting hours. This may include advising on employee engagement programs, events, incident-response, internal and external communication, policy and process changes, and initiative development. We can also help the team benchmark and track progress of initiatives as you scale.

Project Management and Support

The point of contact through the RFP process will be Dr. Christopher Riddick. After contracting, the Town will be coordinating with the assigned project lead and consultant(s) directly. As mentioned above, the Town will provide administrative and project resources to support initial discovery and ongoing project work, including assistance in the collection of documents, scheduling, etc.

At ReadySet, we pride ourselves on our responsiveness. *We expect to be available on the same day for urgent issues, within 24 hours for time-sensitive issues, and within 72 hours for other email or phone correspondence*. Some of our consultants are with us part-time and we are distributed across the United States, so we ask for your flexibility with scheduling.

NEXT STEPS

We hope this proposal addresses your needs. We look forward to talking through this proposal with you in more detail and incorporating your thoughts and clarifications. If we reach an agreement to move forward, we will follow-up with our standard services agreement.

Race Counts is an initiative launched by Advancement project California that does a comprehensive ranking of all 58 counties in the state to assess several issue areas critical for California's future and get a comprehensive picture of racial disparities. These issue areas include democracy, economic opportunity, crime and justice, access to health care, a healthy built environment, education, and housing. Marin county has been ranked number one in the state for performance, meaning that people are doing very well here regarding the indicators listed. However, in terms of racial disparity Marin county is ranked number two, meaning that many of the benefits that come with living here are enjoyed by white people far more frequently than people of color. For example, Latino kids under the age of 18 are approximately 9 times and black kids more than 12 times more likely to be arrested than white kids. Only 30% of Latino families in Marin are living above the cost-of-living adjusted poverty rate. Black and Latino kids have approximately ½ of the 3rd grade math proficiency as white kids in Marin County and are 2-5 times more likely to be suspended from school. Black people are 8 times less likely to have health insurance and twice as likely to have preventable hospitalizations as white people in this county. These are just a few of the facts make Marin county a far more challenging place for people of color than for white people. As good as we feel we have it in Marin, that feeling is not shared by everyone.

San Anselmo may or may not be different than the entirety of Marin County. But we are part of Marin County and the problems that impact the county surely impact us. The Instagram account bipoc.of.marin was started a few years ago to provide a space for people to share their experiences with racism in Marin County schools and community at large anonymously. Several posts in this account are from kids at Archie Williams High School and White Hill Middle School. One student in the class of '22 at Archie Williams said "I was walking around Northgate Mall one day and a group of white boys walked by me. Then the next thing I hear are monkey noises. I was so embarrassed and ran away. This stuff happens way too often and needs to stop." While the posts in this Instgram account do not represent quantitative research about racism in San Anselmo, they give us a sense of how racism is experienced by people of color in our community.

The ad hoc racial equity committee in San Anselmo was started with a narrow charter to assess whether the town's policies contained implicit bias that might make San Anselmo less equitable for people of color. While we hope to formally move forward with this town audit in the near future, discussions during committee meetings indicate that there is more work to do in San Anselmo to ensure that ALL people in town are able to live equitably day to day while enjoying everything that is offered that we cherish so much. For that reason, I hope the Town Council will endorse making the Racial Equity Committee in San Anselmo a permanent standing committee.

Thank you – Denise Krawitz

June 28, 2022

Dear San Anselmo Town Council Members,

I'm writing to express strong support for creating a standing Racial Equity Committee for the Town of San Anselmo. As a member of the one-year ad hoc committee, together we concluded our initial charter charge, and established the groundwork for a sustained, ongoing effort.

Specifically, regarding our charter, we identified

- a quality provider for conducting an audit of town policies, procedures, and programs with the goal of identify and eliminating any overt or hidden systemic or independent racist elements that cause harm to any member of our community; and
- an option for providing both staff and town volunteers training on diversity and racial equity.

To increase community awareness of existing racism, we

- hosted our first community event in conjunction with "United Against Hate" week;
- expressed our committee's position and frustration to the County DA and through a letter to the Marin IJ regarding racist threats received by our then-Mayor and a lack of a timely response and follow up action; and
- actively supported the county's efforts to get town residents to proactively find and change any existing racial covenants in land titles/deeds.

To create a solid foundation for an ongoing committee, we

- created a committee mission statement to guide the members' actions and commitments;
- identified the need for the newly created standing committee members to participate in a stand alone racial equity training to create a common understanding, language and shared goals;
- began establishing relations with Marin County's Racial Equity Committee to share best practices, and align and mutually support each committee's goals; and
- created three subcommittees for future community involvement: inclusivity, engagement, and growth.

As a result of our work and collective insights developed together this year, we strongly believe there's both a need and opportunity for continued work through a standing committee. We want San Anselmo to be an inclusive, inviting, and safe place for all who live and visit here. Yet we know there's work to do in understanding the experiences of a wide array of community members, what types of discrimination and racism that are persistently felt, and how we collectively can enact changes that eliminate harmful programs, policies and practices.

Thank you for your thoughtful consideration,

Heidi Weller